IFSAR Table of Contents

Chapter 1 — Introduction and General Description of the Plant

Chapter 2 — Site Characteristics

Chapter 3 — Design of Structures, Components, Equipment and Systems

Chapter 4 — Reactor

Chapter 5 — Reactor Coolant System and Connected Systems

Chapter 6 — Engineered Safety Features

Chapter 7 — Instrumentation and Controls

Chapter 8 — Electric Power

Chapter 9 — Auxiliary Systems

Chapter 10 — Steam and Power Conversion

Chapter 11 — Radioactive Waste Management

Chapter 12 — Radiation Protection

Chapter 13 — Conduct of Operation

Chapter 14 — Initial Test Program

Chapter 15 — Accident Analyses

Chapter 16 — Technical Specifications

Chapter 17 — Quality Assurance

Chapter 18 — Human Factors Engineering

Chapter 19 — Probabilistic Risk Assessment

IFSAR Formatting Legend

Color	Description
	Original Westinghouse AP1000 DCD Revision 19 content (part of plant-specific DCD)
	Departures from AP1000 DCD Revision 19 content (part of plant-specific DCD)
	Standard FSAR content
	Site-specific FSAR content
	Linked cross-references (chapters, appendices, sections, subsections, tables, figures, and references)

TABLE OF CONTENTS

Section	Title	Page
CHAPTER 9	AUXILIARY SYSTEMS	9.1-1
9.1	Fuel Storage and Handling	9.1-1
9.1.1	New Fuel Storage	9.1-1
9.1.1.1	Design Bases	9.1-1
9.1.1.2	Facilities Description	9.1-1
9.1.1.3	Safety Evaluation	9.1-3
9.1.2	Spent Fuel Storage	9.1-4
9.1.2.1	Design Bases	9.1-4
9.1.2.2	Facilities Description	9.1-5
9.1.2.3	Safety Evaluation	9.1-10
9.1.3	Spent Fuel Pool Cooling System	9.1-10
9.1.3.1	Design Basis	9.1-11
9.1.3.2	System Description	9.1-13
9.1.3.3	Component Description	9.1-14
9.1.3.4	System Operation and Performance	9.1-16
9.1.3.5	Safety Evaluation	9.1-21
9.1.3.6	Inspection and Testing Requirements	9.1-22
9.1.3.7	Instrumentation Requirements	9.1-22
9.1.4	Light Load Handling System (Related to Refueling)	9.1-23
9.1.4.1	Design Basis	9.1-23
9.1.4.2	System Description	9.1-24
9.1.4.3	Safety Evaluation	9.1-30
9.1.4.4	Inspection and Testing Requirements	9.1-35
9.1.5	Overhead Heavy Load Handling Systems	9.1-36
9.1.5.1	Design Basis	9.1-37
9.1.5.2	System Description	9.1-38
9.1.5.3	Safety Evaluation	9.1-45
9.1.5.4	Inservice Inspection/Inservice Testing	9.1-46
9.1.5.5	Load Handling Procedures	9.1-47
9.1.6	Combined License Information for Fuel Storage and Handling	9.1-47
9.1.6.1	Structural Dynamic and Stress Analysis for New Fuel Rack	9.1-47
9.1.6.2	Criticality Analysis for New Fuel Rack	9.1-47
9.1.6.3	Structural Dynamic and Stress Analysis for Spent Fuel Racks	9.1-48
9.1.6.4	Criticality Analysis for Spent Fuel Racks	9.1-48
9.1.6.5	Inservice Inspection Load Handling Systems	9.1-48
9.1.6.6	Operating Radiation Monitor	9.1-48
9.1.6.7	Coupon Monitoring Program	9.1-48
9.1.7	References	9.1-49
9.2	Water Systems	9.2-1
9.2.1	Service Water System	9.2-1
9.2.1.1	Design Basis	9.2-1
9.2.1.2	System Description	9.2-1
9.2.1.3	Safety Evaluation	9.2-6
9.2.1.4	Tests and Inspections	9.2-6
9.2.1.5	Instrument Applications	9.2-6

TABLE OF CONTENTS (CONTINUED)

Section	Title	Page
9.2.2	Component Cooling Water System	9.2-6
9.2.2.1	Design Bases	9.2-7
9.2.2.2	System Description	9.2-9
9.2.2.3	Component Description	9.2-9
9.2.2.4	System Operation and Performance	9.2-11
9.2.2.5	Evaluation	9.2-14
9.2.2.6	Inspection and Testing Requirements	9.2-14
9.2.2.7	Instrumentation Requirements	9.2-15
9.2.3	Demineralized Water Treatment System	9.2-15
9.2.3.1	Design Basis	9.2-16
9.2.3.2	System Description	9.2-16
9.2.3.3	Safety Evaluation	9.2-18
9.2.3.4	Tests and Inspections	9.2-19
9.2.3.5	Instrumentation Applications	9.2-19
9.2.4	Demineralized Water Transfer and Storage System	9.2-19
9.2.4.1	Design Basis	9.2-19
9.2.4.2	System Description	9.2-20
9.2.4.3	System Operation	9.2-21
9.2.4.4	Safety Evaluation	9.2-22
9.2.4.5	Tests and Inspections	9.2-22
9.2.4.6	Instrumentation Applications	9.2-22
9.2.5	Potable Water System	9.2-23
9.2.5.1	Design Basis	9.2-23
9.2.5.2	System Description	9.2-23
9.2.5.3	System Operation	9.2-24
9.2.5.4	Safety Evaluation	9.2-24
9.2.5.5	Tests and Inspections	9.2-24
9.2.5.6	Instrumentation Applications	9.2-24
9.2.6	Sanitary Drainage System	9.2-25
9.2.6.1	Design Basis	9.2-25
9.2.6.2	System Description	9.2-25
9.2.6.3	Safety Evaluation	9.2-26
9.2.6.4	Test and Inspection	9.2-26
9.2.6.5	Instrument Application	9.2-26
9.2.7	Central Chilled Water System	9.2-26
9.2.7.1	Design Basis	9.2-26
9.2.7.2	System Description	9.2-27
9.2.7.3	Safety Evaluation	9.2-31
9.2.7.4	Inservice Inspection/Inservice Testing	9.2-31
9.2.8	Turbine Building Closed Cooling Water System	9.2-31
9.2.8.1	Design Basis	9.2-31
9.2.8.2	System Description	9.2-32
9.2.8.3	Safety Evaluation	9.2-34
9.2.8.4	Tests and Inspections	9.2-34
9.2.8.5	Instrument Applications	9.2-35
9.2.9	Waste Water System	9.2-35
9.2.9.1	Design Basis	9.2-35
9.2.9.2	System Description	9.2-35

TABLE OF CONTENTS (CONTINUED)

Section	Title	Page
	9.2.9.3 Safety Evaluation	9.2-38
	9.2.9.4 Tests and Inspections	9.2-38
	9.2.9.5 Instrumentation Applications	9.2-38
9.2.10	Hot Water Heating System	9.2-38
	9.2.10.1 Design Basis	9.2-38
	9.2.10.2 System Description	9.2-39
	9.2.10.3 Safety Evaluation	9.2-40
	9.2.10.4 Tests and Inspections	9.2-41
	9.2.10.5 Instrument Applications	9.2-41
9.2.11	Raw Water System	9.2-41
	9.2.11.1 Design Basis	9.2-41
	9.2.11.2 System Description	9.2-42
	9.2.11.3 System Operation	9.2-44
	9.2.11.4 Safety Evaluation	9.2-44
	9.2.11.5 Tests and Inspections	9.2-44
	9.2.11.6 Instrumentation Applications	9.2-45
9.2.12	Deep Well Injection System	9.2-45
	9.2.12.1 Design Basis	9.2-45
	9.2.12.2 System Description	9.2-46
	9.2.12.3 System Operation	9.2-48
	9.2.12.4 Safety Evaluation	9.2-48
	9.2.12.5 Tests and Inspections	9.2-49
	9.2.12.6 Instrumentation Applications	9.2-49
9.2.13	Combined License Information	9.2-49
	9.2.13.1 Potable Water	9.2-49
	9.2.13.2 Wastewater Retention Basins	9.2-49
9.2.14	References	9.2-49
9.3	Process Auxiliaries	9.3-1
9.3.1	Compressed and Instrument Air System	9.3-1
	9.3.1.1 Design Basis	9.3-1
	9.3.1.2 System Description	9.3-1
	9.3.1.3 Safety Evaluation	9.3-5
	9.3.1.4 Tests and Inspections	9.3-5
	9.3.1.5 Instrumentation Applications	9.3-5
9.3.2	Plant Gas System	9.3-6
	9.3.2.1 Design Basis	9.3-6
	9.3.2.2 System Description	9.3-6
	9.3.2.3 Safety Evaluation	9.3-8
	9.3.2.4 Tests and Inspections	9.3-8
	9.3.2.5 Instrumentation Requirements	9.3-9
9.3.3	Primary Sampling System	9.3-9
	9.3.3.1 Design Bases	9.3-9
	9.3.3.2 System Description	9.3-10
	9.3.3.3 Containment Isolation Valves	9.3-11
	9.3.3.4 System Operation and Performance	9.3-11
	9.3.3.5 Design Evaluation	9.3-11
	9.3.3.6 Inspection and Testing Requirements	9.3-12
	9.3.3.7 Instrumentation Requirements	9.3-12

TABLE OF CONTENTS (CONTINUED)

Section	Title	Page
9.3.4	Secondary Sampling System	9.3-12
9.3.4.1	Design Basis	9.3-13
9.3.4.2	System Description	9.3-13
9.3.4.3	Safety Evaluation	9.3-13
9.3.4.4	Tests and Inspections	9.3-13
9.3.4.5	Instrumentation Applications	9.3-14
9.3.5	Equipment and Floor Drainage Systems	9.3-14
9.3.5.1	Design Basis	9.3-14
9.3.5.2	System Description	9.3-15
9.3.5.3	Safety Evaluation	9.3-17
9.3.5.4	Tests and Inspections	9.3-18
9.3.6	Chemical and Volume Control System	9.3-18
9.3.6.1	Design Bases	9.3-18
9.3.6.2	System Description	9.3-20
9.3.6.3	Component Descriptions	9.3-24
9.3.6.4	System Operation and Performance	9.3-29
9.3.6.5	Design Evaluation	9.3-33
9.3.6.6	Inspection and Testing Requirements	9.3-33
9.3.6.7	Instrumentation Requirements	9.3-34
9.3.7	Combined License Information	9.3-36
9.3.8	References	9.3-37
9.4	Air-Conditioning, Heating, Cooling, and Ventilation System	9.4-1
9.4.1	Nuclear Island Nonradioactive Ventilation System	9.4-1
9.4.1.1	Design Basis	9.4-1
9.4.1.2	System Description	9.4-4
9.4.1.3	Safety Evaluation	9.4-13
9.4.1.4	Tests and Inspection	9.4-13
9.4.1.5	Instrumentation Applications	9.4-14
9.4.2	Annex/Auxiliary Buildings Nonradioactive HVAC System	9.4-15
9.4.2.1	Design Basis	9.4-15
9.4.2.2	System Description	9.4-16
9.4.2.3	Safety Evaluation	9.4-24
9.4.2.4	Tests and Inspections	9.4-25
9.4.2.5	Instrumentation Applications	9.4-25
9.4.3	Radiologically Controlled Area Ventilation System	9.4-25
9.4.3.1	Design Basis	9.4-25
9.4.3.2	System Description	9.4-28
9.4.3.3	Safety Evaluation	9.4-33
9.4.3.4	Tests and Inspections	9.4-33
9.4.3.5	Instrumentation Applications	9.4-33
9.4.4	Balance-of-Plant-Interface	9.4-34
9.4.5	Engineered Safety Features Ventilation System	9.4-34
9.4.6	Containment Recirculation Cooling System	9.4-34
9.4.6.1	Design Basis	9.4-34
9.4.6.2	System Description	9.4-35
9.4.6.3	Safety Evaluation	9.4-37
9.4.6.4	Tests and Inspections	9.4-37
9.4.6.5	Instrumentation Application	9.4-37

TABLE OF CONTENTS (CONTINUED)

Section	Title	Page
9.4.7	Containment Air Filtration System	9.4-38
9.4.7.1	Design Basis	9.4-38
9.4.7.2	System Description	9.4-39
9.4.7.3	Safety Evaluation	9.4-44
9.4.7.4	Tests and Inspections	9.4-44
9.4.7.5	Instrumentation Application	9.4-45
9.4.8	Radwaste Building HVAC System	9.4-46
9.4.8.1	Design Basis	9.4-46
9.4.8.2	System Description	9.4-46
9.4.8.3	Safety Evaluation	9.4-49
9.4.8.4	Tests and Inspections	9.4-49
9.4.8.5	Instrumentation Applications	9.4-49
9.4.9	Turbine Building Ventilation System	9.4-49
9.4.9.1	Design Basis	9.4-50
9.4.9.2	System Description	9.4-50
9.4.9.3	System Operation	9.4-53
9.4.9.4	Safety Evaluation	9.4-53
9.4.9.5	Tests and Inspections	9.4-54
9.4.9.6	Instrumentation Applications	9.4-54
9.4.10	Diesel Generator Building Heating and Ventilation System	9.4-54
9.4.10.1	Design Basis	9.4-54
9.4.10.2	System Description	9.4-55
9.4.10.3	Safety Evaluation	9.4-59
9.4.10.4	Tests and Inspection	9.4-59
9.4.10.5	Instrumentation Applications	9.4-59
9.4.11	Health Physics and Hot Machine Shop HVAC System	9.4-60
9.4.11.1	Design Basis	9.4-60
9.4.11.2	System Description	9.4-61
9.4.11.3	Safety Evaluation	9.4-63
9.4.11.4	Tests and Inspections	9.4-63
9.4.11.5	Instrumentation Application	9.4-63
9.4.12	Combined License Information	9.4-64
9.4.13	References	9.4-64
9.5	Other Auxiliary Systems	9.5-1
9.5.1	Fire Protection System	9.5-1
9.5.1.1	Design Basis	9.5-1
9.5.1.2	System Description	9.5-2
9.5.1.3	Safety Evaluation (Fire Protection Analysis)	9.5-11
9.5.1.4	Testing and Inspection	9.5-13
9.5.1.5	Instrumentation Applications	9.5-13
9.5.1.6	Personnel Qualification and Training	9.5-13
9.5.1.7	Quality Assurance	9.5-13
9.5.1.8	Fire Protection Program	9.5-14
9.5.1.9	Combined License Information	9.5-22
9.5.2	Communication System	9.5-23
9.5.2.1	Design Basis	9.5-23
9.5.2.2	System Description	9.5-24
9.5.2.3	System Operation Communication Stations	9.5-25

TABLE OF CONTENTS (CONTINUED)

Section	Title	Page
9.5.2.4	Inspection and Testing Requirements	9.5-26
9.5.2.5	Combined License Information	9.5-26
9.5.3	Plant Lighting System	9.5-26
9.5.3.1	Design Basis	9.5-26
9.5.3.2	System Description	9.5-27
9.5.3.3	Safety Evaluation	9.5-29
9.5.3.4	Test and Inspections	9.5-29
9.5.3.5	Combined License Information for Plant Lighting	9.5-29
9.5.4	Standby Diesel Fuel Oil System	9.5-29
9.5.4.1	Design Basis	9.5-30
9.5.4.2	System Description Storage and Transfer	9.5-30
9.5.4.3	Safety Evaluation	9.5-32
9.5.4.4	System Evaluation	9.5-33
9.5.4.5	Tests and Inspections	9.5-33
9.5.4.6	Instrumentation Applications	9.5-34
9.5.4.7	Combined License Information	9.5-34
9.5.5	References	9.5-35
APPENDIX 9A	FIRE PROTECTION ANALYSIS	9A-1
9A.1	Introduction	9A-1
9A.2	Fire Protection Analysis Methodology	9A-1
9A.2.1	Fire Area Description	9A-1
9A.2.2	Combustible Material Survey	9A-2
9A.2.3	Fire Severity Categorization	9A-2
9A.2.4	Combustible Loading and Equivalent Fire Duration Calculations	9A-2
9A.2.5	Fire Protection Adequacy	9A-3
9A.2.6	Fire Protection System Integrity	9A-4
9A.2.7	Safe Shutdown Evaluation	9A-4
9A.2.7.1	Criteria and Assumptions	9A-4
9A.2.7.2	Safe Shutdown Methodology	9A-9
9A.3	Fire Protection Analysis Results	9A-9
9A.3.1	Nuclear Island	9A-10
9A.3.1.1	Containment/Shield Building	9A-10
9A.3.1.2	Auxiliary Building - Nonradiologically Controlled Areas	9A-30
9A.3.1.3	Auxiliary Building - Radiologically Controlled Areas	9A-62
9A.3.2	Turbine Building	9A-71
9A.3.2.1	Fire Area 2000 AF 01	9A-72
9A.3.2.2	Fire Area 2000 AF 02	9A-74
9A.3.2.3	Fire Area 2009 AF 01	9A-74
9A.3.2.4	Fire Area 2009 AF 02	9A-75
9A.3.2.5	Not used.	9A-75
9A.3.2.6	Not used.	9A-75
9A.3.2.7	Fire Area 2000 AF 03	9A-75
9A.3.2.8	Fire Area 2033 AF 02	9A-76
9A.3.2.9	Fire Area 2040 AF 01	9A-76
9A.3.2.10	Fire Area 2043 AF 01	9A-77

TABLE OF CONTENTS (CONTINUED)

Section	Title	Page
9A.3.2.11	Fire Area 2050 AF 01	9A-78
9A.3.2.12	Fire Area 2052 AF 01	9A-79
9A.3.2.13	Fire Area 2053 AF 01	9A-79
9A.3.2.14	Fire Area 2053 AF 02	9A-80
9A.3.2.15	Fire Area 2141 AF 01	9A-81
9A.3.2.16	Fire Area 2142 AF 01	9A-82
9A.3.3	Yard Area and Outlying Buildings	9A-82
9A.3.4	Annex Building	9A-83
9A.3.4.1	Fire Area 4001 AF 01	9A-83
9A.3.4.2	Fire Area 4001 AF 02	9A-84
9A.3.4.3A	Fire Area 4002 AF 01	9A-84
9A.3.4.3B	Fire Area 4002 AF 03	9A-85
9A.3.4.4	Fire Area 4002 AF 02	9A-85
9A.3.4.5	Fire Area 4003 AF 01	9A-86
9A.3.4.6	Fire Area 4003 AF 02	9A-86
9A.3.4.7	Fire Area 4031 AF 01	9A-87
9A.3.4.8	Fire Area 4031 AF 02	9A-88
9A.3.4.9	Fire Area 4031 AF 05	9A-89
9A.3.4.10	Fire Area 4031 AF 06	9A-90
9A.3.4.11	Fire Area 4032 AF 01	9A-90
9A.3.4.12	Fire Area 4032 AF 02	9A-91
9A.3.4.13	Fire Area 4033 AF 01	9A-92
9A.3.4.14	Fire Area 4034 AF 01	9A-93
9A.3.4.15	Fire Area 4035 AF 01	9A-94
9A.3.4.16	Fire Area 4041 AF 01	9A-95
9A.3.4.17	Fire Area 4041 AF 02	9A-96
9A.3.4.18	Fire Area 4042 AF 01	9A-97
9A.3.4.19	Fire Area 4042 AF 02	9A-98
9A.3.4.20	Fire Area 4051 AF 01	9A-98
9A.3.4.21	Fire Area 4052 AF 01	9A-99
9A.3.5	Radwaste Building	9A-100
9A.3.5.1	Fire Area 5031 AF 01	9A-101
9A.3.6	Diesel Generator Building	9A-102
9A.3.6.1	Fire Area 6030 AF 01	9A-102
9A.3.6.2	Fire Area 6030 AF 02	9A-103
9A.3.6.3	Fire Area 6030 AF 03	9A-104
9A.3.6.4	Fire Area 6030 AF 04	9A-105
9A.3.6.5	Fire Area 6001 AF 01	9A-106
9A.3.7	Special Topics	9A-106
9A.3.7.1	Evaluation of Spurious Actuation	9A-106
9A.3.7.2	Protection of Accident Mitigation Equipment	9A-108
9A.4	References	9A-108

LIST OF TABLES

Table Number	Title	Page
9.1-1	Loads and Load Combinations for Fuel Racks	9.1-51
9.1-2	Spent Fuel Pool Cooling and Purification System Design Parameters	9.1-52
9.1-3	Component Data – Spent Fuel Pool Cooling and Purification System	9.1-53
9.1-4	Station Blackout/Seismic Event Times	9.1-55
9.1-5	Nuclear Island Heavy Load Handling Systems	9.1-56
9.1.5-1	Cask Handling Crane Component Data	9.1-57
9.1.5-2	Special Lifting Devices Used for the Handling of Critical Loads	9.1-58
9.1.5-3	Polar Crane Component Data	9.1-59
9.1.5-4	Equipment Hatch Hoist Component Data	9.1-60
9.2.1-1	Nominal Service Water Flows and Heat Loads at Different Operating Modes	9.2-50
9.2.2-1	Nominal Component Data - Component Cooling Water System	9.2-51
9.2.2-2	Plant Components Cooled by Component Cooling Water System	9.2-52
9.2.3-1	Guidelines for Demineralized Water (Measured at the Outlet of the Demineralized Water Treatment System)	9.2-53
9.2.7-1	Component Data - Central Chilled Water System (Nominal Values)	9.2-54
9.2.8-1	Turbine Building Closed Cooling Water System Equipment Load List	9.2-55
9.2.10-1	Hot Water Heating System Design Data (Nominal Values)	9.2-56
9.3.1-1	Safety-Related Air-Operated Valves	9.3-38
9.3.1-2	Nominal Component Design Data - Instrument Air Subsystem	9.3-40
9.3.1-3	Nominal Component Design Data - Service Air Subsystem	9.3-41
9.3.1-4	Nominal Component Design Data - High-pressure Air Subsystem	9.3-42
9.3.3-1	Primary Sampling System Sample Points - Normal Plant Operations (Liquid And Gaseous)	9.3-43
9.3.3-2	Local Sample Point Not in the Primary Sampling System (Normal Plant Operations)	9.3-44
9.3.4-1	Secondary Sampling System (Continuous Measurements)	9.3-48
9.3.4-2	Secondary Sampling System (Selective Measurements)	9.3-50
9.3.5-1	Component Data - Radioactive Waste Drains System (Nominal Values)	9.3-51
9.3.6-1	Nominal Chemical and Volume Control System Parameters	9.3-52
9.3.6-2	Chemical and Volume Control System Nominal Equipment Design Parameters	9.3-53
9.4-1	Design Filtration Efficiencies and Nominal Airflow Rates for HVAC Systems	9.4-66
9.4.1-1	Component Data – Nuclear Island Nonradioactive Ventilation System MCR/CSA HVAC Subsystem (Nominal Values)	9.4-67
9.4.1-2	Component Data – Nuclear Island Nonradioactive Ventilation System Class 1E Electrical Room HVAC Subsystem (Nominal Values)	9.4-69
9.4.1-3	Component Data – Nuclear Island Nonradioactive Ventilation System Passive Containment Cooling System Valve Room Heating and Ventilation Subsystem (Nominal Values)	9.4-72
9.4.2-1	Component Data – Annex/Auxiliary Buildings Nonradioactive HVAC System Switchgear Room HVAC Subsystem (Nominal Values)	9.4-73
9.4.2-2	Component Data – Annex/Auxiliary Buildings Nonradioactive HVAC System Equipment Room HVAC System (Nominal Values)	9.4-74
9.4.3-1	Component Data – Radiologically Controlled Area Ventilation System Auxiliary/Annex Building Ventilation Subsystem (Nominal Values)	9.4-75

LIST OF TABLES (CONTINUED)

Table Number	Title	Page
9.4.6-1	Component Data – Containment Recirculation Cooling System Containment Recirculation Fan Coil Unit Subsystem (Nominal Values)	9.4-76
9.4.7-1	Component Data – Containment Air Filtration System (Nominal Values)	9.4-77
9.4.10-1	Component Data – Diesel Generator Building Heating And Ventilation System Normal Heating and Ventilation Subsystem (Nominal Values)	9.4-79
9.4.10-2	Component Data – Diesel Generator Building Heating and Ventilation System Standby Exhaust Ventilation Subsystem (Nominal Values)	9.4-81
9.4.10-3	Component Data – Diesel Generator Building Heating and Ventilation System Fuel Oil Day Tank Vault Exhaust Subsystem (Nominal Values)	9.4-82
9.4.10-4	Component Data – Diesel Generator Building Heating and Ventilation System Diesel Oil Transfer Module Enclosures Ventilation and Heating Subsystem (Nominal Values)	9.4-83
9.5.1-1	AP1000 Fire Protection Program Compliance With BTP CMEB 9.5-1	9.5-38
9.5.1-2	Component Data - Fire Protection System (Nominal Values)	9.5-67
9.5.1-3	Exceptions to NFPA Standard Requirements	9.5-68
9.5.1-4	Capabilities Used to Achieve Cold Shutdown Following a Fire	9.5-70
9.5.2-1	Communication Equipment and Locations	9.5-71
9.5.4-1	Nominal Component Data Standby Diesel Fuel Oil System	9.5-72
9.5.4-2	Indicating and Alarm Devices - Standby Diesel Fuel System	9.5-74
9.5-201	Not Used	9.5-75
9.5-202	Not Used	9.5-75

LIST OF FIGURES

Figure Number	Title	Page
9.1-1	(Sheet 1 of 2) New Fuel Storage Rack Layout (72 Storage Location)	9.1-61
9.1-1	(Sheet 2 of 2) New Fuel Storage Rack Cross Section	9.1-62
9.1-2	(Sheet 1 of 2) Region 1 Spent Fuel Storage Rack Layout	9.1-63
9.1-2	(Sheet 2 of 2) Region 1 Spent Fuel Storage Rack Cross Section	9.1-64
9.1-3	(Sheet 1 of 2) Region 2 Spent Fuel Storage Rack Layout	9.1-65
9.1-3	(Sheet 2 of 2) Region 2 Spent Fuel Storage Rack Cross Section	9.1-66
9.1-4	Spent Fuel Storage Pool Layout	9.1-67
9.1-5	Spent Fuel Pool Cooling System (Normal Operation)	9.1-68
9.1-6	(Sheet 1 of 2) Spent Fuel Pool Cooling System Piping and Instrumentation Diagram	9.1-69
9.1-6	(Sheet 2 of 2) Spent Fuel Pool Cooling System Piping and Instrumentation Diagram	9.1-70
9.2.1-1	Service Water System Piping and Instrumentation Diagram	9.2-57
9.2.2-1	Component Cooling Water System Simplified Flow Diagram	9.2-58
9.2.2-2	(Sheet 1 of 5) Component Cooling Water System Piping and Instrumentation Diagram	9.2-59
9.2.2-2	(Sheet 2 of 5) Component Cooling Water System Piping and Instrumentation Diagram	9.2-60
9.2.2-2	(Sheet 3 of 5) Component Cooling Water System Piping and Instrumentation Diagram	9.2-61
9.2.2-2	(Sheet 4 of 5) Component Cooling Water System Piping and Instrumentation Diagram	9.2-62
9.2.2-2	(Sheet 5 of 5) Component Cooling Water System Piping and Instrumentation Diagram	9.2-63
9.2.4-1	Demineralized Water Transfer and Storage System Containment Isolation Provision	9.2-64
9.2.5-1	Main Control Room Potable Water System Isolation	9.2-65
9.2.7-1	(Sheet 1 of 4) Central Chilled Water System Piping and Instrumentation Diagram	9.2-66
9.2.7-1	(Sheet 2 of 4) Central Chilled Water System Piping and Instrumentation Diagram	9.2-67
9.2.7-1	(Sheet 3 of 4) Central Chilled Water System Piping and Instrumentation Diagram	9.2-68
9.2.7-1	(Sheet 4 of 4) High Capacity Subsystem Simplified Sketch	9.2-69
9.2-201	(Sheet 1 of 3) Raw Water System Flow Diagram	9.2-70
9.2-201	(Sheet 2 of 3) Raw Water System Flow Diagram	9.2-71
9.2-201	(Sheet 3 of 3) Raw Water System Flow Diagram	9.2-72
9.2-202	Deep Well Injection and Dual Zone Monitoring Well Locations	9.2-73
9.2-203	Liquid Waste Stream Collection and Disposal Schematic (Typical)	9.2-74
9.2-204	Deep Injection Well (Typical)	9.2-75
9.2-205	Dual Zone Monitoring Well (Typical)	9.2-76
9.3.1-1	(Sheet 1 of 3) Compressed & Instrument Air System Piping and Instrumentation Diagram	9.3-56
9.3.1-1	(Sheet 2 of 3) Compressed & Instrument Air System Piping and Instrumentation Diagram	9.3-57
9.3.1-1	(Sheet 3 of 3) Compressed & Instrument Air System Piping and Instrumentation Diagram	9.3-58
9.3.3-1	Simplified Sketch of the Primary Sampling System	9.3-59

LIST OF FIGURES (CONTINUED)

Figure Number	Title	Page
9.3.5-1	General Arrangement of Drainage Systems	9.3-60
9.3.6-1	(Sheet 1 of 2) Chemical and Volume Control System Piping and Instrumentation Diagram	9.3-61
9.3.6-1	(Sheet 2 of 2) Chemical and Volume Control System Piping and Instrumentation Diagram	9.3-62
9.4.1-1	(Sheet 1 of 7) Nuclear Island Non-Radioactive Ventilation System Piping and Instrumentation Diagram	9.4-84
9.4.1-1	(Sheet 2 of 7) Nuclear Island Non-Radioactive Ventilation System	9.4-85
9.4.1-1	(Sheet 3 of 7) Nuclear Island Non-Radioactive Ventilation System Piping and Instrumentation Diagram	9.4-86
9.4.1-1	(Sheet 4 of 7) Nuclear Island Non-Radioactive Ventilation System Piping and Instrumentation Diagram	9.4-87
9.4.1-1	(Sheet 5 of 7) Nuclear Island Non-Radioactive Ventilation System Piping and Instrumentation Diagram	9.4-88
9.4.1-1	(Sheet 6 of 7) Nuclear Island Non-Radioactive Ventilation System Piping and Instrumentation System	9.4-89
9.4.1-1	(Sheet 7 of 7) Nuclear Island Non-Radioactive Ventilation System Piping and Instrumentation Diagram	9.4-90
9.4.2-1	(Sheet 1 of 7) Annex/Aux Non-Radioactive Ventilation System Piping and Instrumentation Diagram	9.4-91
9.4.2-1	(Sheet 2 of 7) Annex/Aux Non-Radioactive Ventilation System Piping and Instrumentation Diagram	9.4-92
9.4.2-1	(Sheet 3 of 7) Annex/Aux Non-Radioactive Ventilation System Piping and Instrumentation Diagram	9.4-93
9.4.2-1	(Sheet 4 of 7) Annex/Aux Non-Radioactive Ventilation System Piping and Instrumentation Diagram	9.4-94
9.4.2-1	(Sheet 5 of 7) Annex/Aux Non-Radioactive Ventilation System Piping and Instrumentation Diagram	9.4-95
9.4.2-1	(Sheet 6 of 7) Annex/Aux Non-Radioactive Ventilation System Piping and Instrumentation Diagram	9.4-96
9.4.2-1	(Sheet 7 of 7) Annex/Aux Non-Radioactive Ventilation System Piping and Instrumentation Diagram	9.4-97
9.4.3-1	(Sheet 1 of 3) Radiologically Controlled Ventilation System Piping and Instrumentation Diagram	9.4-98
9.4.3-1	(Sheet 2 of 3) Radiologically Controlled Area Ventilation System Piping and Instrumentation Diagram	9.4-99
9.4.3-1	(Sheet 3 of 3) Radiologically Controlled Area Ventilation System Piping and Instrumentation Diagram	9.4-100
9.4.6-1	Containment Recirculation Cooling System Piping and Instrumentation Diagram	9.4-101
9.4.7-1	(Sheet 1 of 2) Containment Air Filtration System Piping and Instrumentation Diagram	9.4-102
9.4.7-1	(Sheet 2 of 2) Containment Air Filtration System Piping and Instrumentation Diagram	9.4-103
9.4.8-1	Radwaste Building HVAC System	9.4-104
9.4.9-1	Turbine Building HVAC System	9.4-105
9.4.10-1	(Sheet 1 of 2) Diesel Generator Building Heating and Ventilation System Piping and Instrumentation Diagram	9.4-106

LIST OF FIGURES (CONTINUED)

Figure Number	Title	Page
9.4.10-1	(Sheet 2 of 2) Diesel Generator Building Heating and Ventilation System Piping and Instrumentation Diagram	9.4-107
9.4.11-1	Health Physics and Hot Machine Shop HVAC System	9.4-108
9.5.1-1	(Sheet 1 of 3) Fire Protection System Piping and Instrumentation Diagram	9.5-76
9.5.1-1	(Sheet 2 of 3) Fire Protection System Piping and Instrumentation Diagram (REF) FPS 002, 004	9.5-77
9.5.1-1	(Sheet 3 of 3) Fire Protection System Piping and Instrumentation Diagram	9.5-78
9.5.4-1	(Sheet 1 of 3) Standby Diesel Fuel Oil System Piping and Instrumentation Diagram	9.5-79
9.5.4-1	(Sheet 2 of 3) Standby Diesel Fuel Oil System Piping and Instrumentation Diagram	9.5-80
9.5.4-1	(Sheet 3 of 3) Standby Diesel Fuel Oil System Piping and Instrumentation Diagram	9.5-81
9A-1	(Sheet 1 of 16) Fire Areas Legend	9A-150
9A-1	(Sheet 2 of 16) Nuclear Island Fire Area Plan at Elevation 66′-6″	9A-151
9A-1	(Sheet 3 of 16) Nuclear Island Fire Area Plan at Elevation 82′-6″	9A-152
9A-1	(Sheet 4 of 16) Nuclear Island Fire Area Plan at Elevation 96′-6″	9A-153
9A-1	(Sheet 5 of 16) Nuclear Island Fire Areas Plan at Elevation 100′-0″ & 107′-2″	9A-154
9A-1	(Sheet 6 of 16) Nuclear Island Fire Area Plan at Elevation 117′-6″	9A-155
9A-1	(Sheet 7 of 16) Nuclear Island Fire Area Plan at Elevation 135′-3″	9A-156
9A-1	(Sheet 8 of 16) Nuclear Island Fire Areas Plan at Elevation 153′-0″ & 160′-6″	9A-157
9A-1	(Sheet 9 of 16) Nuclear Island Fire Areas Plan at Elevation 160′-6″ & 180′-0″	9A-158
9A-1	(Sheet 10 of 16) Nuclear Island Fire Area Section A-A	9A-159
9A-1	(Sheet 11 of 16) Nuclear Island Fire Area Section B-B	9A-160
9A-1	(Sheet 12 of 16) Nuclear Island Fire Areas Section C-C & H-H	9A-161
9A-1	(Sheet 13 of 16) Nuclear Island Fire Area Section G-G	9A-162
9A-1	(Sheet 14 of 16) Nuclear Island Fire Area Section J-J	9A-163
9A-1	(Sheet 15 of 16) Nuclear Island Fire Area Section K-K	9A-164
9A-1	(Sheet 16 of 16) Nuclear Island Fire Areas Section I-I & R-R	9A-165
9A-2	(Sheet 1 of 5) Turbine Building Fire Area Plan at Elevation 100′-0″	9A-166
9A-2	(Sheet 2 of 5) Turbine Building Fire Area Plan at Elevation 117′-6″	9A-167
9A-2	(Sheet 3 of 5) Turbine Building Fire Area Plan at Elevation 135′-3″	9A-168
9A-2	(Sheet 4 of 5) Turbine Building Fire Area Plan at Elevation 161′-0″	9A-169
9A-2	(Sheet 5 of 5) Turbine Building Fire Areas Plan at Elevation 245′-0″ & 226′-10″	9A-170
9A-3	(Sheet 1 of 3) Annex I & II Building Fire Areas Plan at Elevation 100'-0" & 107'-2"	9A-171
9A-3	(Sheet 2 of 3) Annex I & II Building Fire Area Plan at Elevation 117′-6″	9A-172
9A-3	(Sheet 3 of 3) Annex I & II Building Fire Area Plan at Elevation 135′-3″	9A-173
9A-4	Radwaste Building Fire Area Plan at Elevation 100′-0″	9A-174
9A-5	Diesel Generator Building Fire Area Plan at Elevation 100'-0″	9A-175

Chapter 9 Auxiliary Systems

9.1 Fuel Storage and Handling

9.1.1 New Fuel Storage

9.1.1.1 Design Bases

New fuel is stored in a high density rack which includes integral neutron absorbing material to maintain the required degree of subcriticality. The rack is designed to store fuel of the maximum design basis enrichment. The rack in the new fuel pit consists of an array of cells interconnected to each other at several elevations and to a thick base plate at the bottom elevation. This rack module is not anchored to the pit floor.

The new fuel rack includes storage locations for 72 fuel assemblies. The rack layout and array center-to-center spacing is shown in Figure 9.1-1. This spacing provides a minimum separation between adjacent fuel assemblies which is sufficient to maintain a subcritical array even in the event the building is flooded with unborated water or fire extinguishant aerosols or during any design basis event. The design of the rack is such that a fuel assembly cannot be inserted into a location other than a location designed to receive an assembly. Surfaces that come into contact with the fuel assemblies are made of annealed austenitic stainless steel.

The requirements of ANS 57.1 are addressed in Subsection 9.1.4. The rack is designed to withstand nominal operating loads and safe shutdown earthquake seismic loads defined in Table 9.1-1. The new fuel storage rack is designed to meet seismic Category I requirements of Regulatory Guide 1.29. Refer to Subsection 1.9.1 for compliance with Regulatory Guides. The rack is also designed to withstand the maximum uplift force of the fuel handling machine.

AP1000 equipment, seismic and ASME Code classifications are discussed in Section 3.2. The requirements of ASME Code Section III, Division I, Article NF3000 are used as the criteria for evaluation of stress analysis. The materials are procured in accordance with ASME Code Section III, Division I, Article NF2000. Criticality analyses are performed in accordance with the requirements of ANSI N16.1-75, Nuclear Criticality Safety in Operations with Fissionable Materials Outside Reactors (Reference 1); and analysis codes are validated against the requirements of ANSI N16.9-75, Validation of Calculational Methods for Nuclear Criticality Safety (Reference 2).

The stress analysis of the new fuel rack satisfies all of the applicable provisions in NRC Regulatory Guide 1.124, Revision 1 for components design by the linear elastic method (Reference 22).

9.1.1.2 Facilities Description

The new fuel storage facility is located within the seismic Category I auxiliary building fuel handling area. The facility is protected from the effects of natural phenomena such as earthquakes, wind, tornados, floods, and external missiles by the external walls of the auxiliary building. See Section 3.5 for additional discussion on protection from missiles. The facility is designed to maintain its structural integrity following a safe shutdown earthquake and to perform its intended function following a postulated event such as fire, internal missiles, or pipe break. The walls surrounding the fuel handling area and new fuel storage pit protect the fuel from missiles generated inside the auxiliary building. The fuel handling area does not contain a credible source of missiles. Refer to Subsection 1.2.4.3 for a discussion of the auxiliary building. Refer to Section 3.8 for a discussion of the structural design of the new fuel storage area. Refer to Subsection 3.5.1 for a discussion of missile sources and protection.

The dry, unlined, approximately 17-feet deep reinforced concrete pit is designed to provide support for the new fuel storage rack. The rack is supported by the pit floor. The walls of the new fuel pit are seismic Category I. The new fuel pit is normally covered to prevent foreign objects from entering the new fuel storage rack. Since the only crane that can access the new fuel pit does not have the capacity to lift heavy objects, as defined in Subsection 9.1.5, the new fuel pit cover is not designed to protect the fuel assemblies from the effects of dropped heavy objects. Figures 1.2-7 through 1.2-10 show the relationship between the new fuel storage facility and other features of the fuel handling area.

The new fuel storage pit is drained by gravity drains that are part of the radioactive waste drain system (Subsection 9.3.5), draining to the waste holdup tanks which are part of the liquid radwaste system (Section 11.2). These drains preclude flooding of the pit by an accidental release of water.

Nonseismic equipment in the vicinity of the new fuel storage rack is evaluated to confirm that its failure could not result in an increase of K_{eff} beyond the maximum allowable K_{eff}. Refer to Subsection 3.7.3.13 for a discussion of the nonseismic equipment evaluation.

The fuel handling machine is used to handle new fuel assemblies in the rail car bay, new fuel rack, and new fuel elevator. The capacity of the fuel handling machine, while over the new fuel storage rack, is limited to lifting a fuel assembly, control rod assembly, and handling tool. The new fuel storage rack is not accessed by the cask handling crane. This precludes the movement of loads greater than fuel components over stored new fuel assemblies.

During fuel handling operations, a ventilation system removes gaseous radioactivity from the atmosphere above the new fuel pit. Refer to Subsection 9.4.3 for a discussion of the fuel handling area HVAC system and Section 11.5 for process radiation monitoring. Security for the new fuel assemblies is described in separate security documents referred to in Section 13.6.

9.1.1.2.1 New Fuel Rack Design

A. Design and Analysis of the New Fuel Rack

The new fuel storage rack array center-to-center spacing of nominally 10.9 inches provides a minimum separation between adjacent fuel assemblies sufficient with neutron absorbing material to maintain a subcritical array. The seismic and stress analyses of the new fuel rack consider the conditions of full and partially filled fuel assembly loadings. The rack is evaluated for the safe shutdown earthquake condition against the seismic Category I requirements. A stress analysis is performed to verify the acceptability of the critical load components and paths under normal and faulted conditions. The rack rests on the pit floor.

The dynamic response of the fuel rack assembly during a seismic event is the condition which produces the governing loads and stresses on the structure. The new fuel storage rack is designed to meet the seismic Category I requirements of Regulatory Guide 1.29.

Loads and Load Combinations

The applied loads to the new fuel rack are:

- Dead loads
- Live loads - effect of lifting the empty rack during installation
- Seismic forces of the safe shutdown earthquake
- Fuel handling machine uplift while over the new fuel rack - postulated stuck new fuel assembly

Table 9.1-1 shows loads and load combinations considered in the analyses of the new fuel rack.

The margins of safety for the new fuel rack in the multi-direction seismic event are produced using loads obtained from the seismic analysis based on the simultaneous application of three statistically independent, orthogonal accelerations.

B. Fuel Handling Machine Uplift Analysis

An analysis is performed to demonstrate that the rack can withstand a maximum uplift load of 4000 pounds. This load is applied to a postulated stuck fuel assembly. Resultant new fuel rack stresses are evaluated against the stress limits and are demonstrated to be acceptable. It is demonstrated that there is no change in new fuel rack geometry of a magnitude which causes the criticality criteria to be violated.

C. New Fuel Assembly Drop Accident Analysis

During normal fuel handling operations, a single failure-proof hoist, designed to meet the requirements of NUREG-0554, is the only hoist capable of moving new fuel above the operating floor. Per the design criteria contained in NUREG-0554, drops from a single failure-proof hoist are deemed unlikely and do not require further analysis. The consequences of such a drop are minimal since no safety-related equipment would be impacted and there are no radiological releases with new unirradiated fuel. Because the likelihood of a new fuel assembly being dropped into the new fuel pit and onto the new fuel racks is minimal, it is unnecessary to evaluate drop scenarios for the new fuel storage rack.

D. Failure of the Fuel Handling Machine

The fuel handling machine is a seismic Category II component. The fuel handling machine is evaluated to show that the machine does not fall into the new fuel pit during a seismic event. The fuel handling machine is also designed to maintain its load carrying and structural integrity functions during a safe shutdown earthquake.

E. Internally Generated Missiles

The fuel handling area does not contain any credible sources of internally generated missiles.

Stress analyses are performed by the vendor using loads developed by the dynamic analysis. Stresses are calculated at critical sections of the rack and compared to acceptance criteria referenced in ASME Section III, Division I, Article NF3000.

9.1.1.3 Safety Evaluation

The new fuel rack, being a seismic Category I structure, is designed to withstand normal and postulated dead loads, live loads, loads resulting from thermal effects, and loads caused by the safe shutdown earthquake event.

The design of the new fuel rack is such that K_{eff} (with all biases and uncertainties) remains less than or equal to 0.95 with full density unborated water and less than or equal to 0.98 with optimum moderation and full reflection conditions.

The criticality evaluation considers the inherent neutron absorbing effect of the materials of construction, including fixed neutron absorbing "poison" material.

The new fuel rack is located in the new fuel storage pit, which has a large cover to protect the new fuel from debris. This large cover contains smaller openings/ports that access each new fuel assembly cell and have their own individual cover. Each small cover is opened/removed sequentially during new fuel transfer operations to gain access to the affected assembly and is then replaced. Both covers typically remain closed to prevent debris and foreign materials from entering the new fuel pit, new fuel rack, and new fuel assemblies. No loads are required to be carried over the new fuel storage pit while the large cover is in place. The large cover is designed such that it will not fall and damage the new fuel or new fuel rack during a seismic event. Administrative controls are utilized when either of the covers is removed for new fuel transfer operations to limit the potential for dropped object damage.

Based on the conservative design and operation of the single failure-proof FHM hoist and associated lifting tools to handle unirradiated new fuel assemblies, dropping a new fuel assembly is deemed unlikely, poses no safety or radiological consequences, and therefore, does not require analysis. Handling equipment (cask handling crane) capable of carrying loads heavier than fuel components is prevented from traveling over the fuel storage area. The new fuel storage rack can withstand an uplift force of 4000 pounds.

Materials used in new fuel rack construction are compatible with the storage pit environment, and surfaces that come into contact with the fuel assemblies are made of annealed austenitic stainless steel. Structural materials are corrosion resistant and will not contaminate the fuel assemblies or storage pit environment. Neutron absorbing "poison" material used in the new fuel rack design has been qualified for the storage environment. Venting of the neutron absorbing material is considered in the detailed design of the new fuel storage rack.

The new fuel assemblies are stored dry. The rack structure is designed to maintain a safe geometric array for normal and postulated accident conditions. The fixed neutron absorbing "poison" material maintains the required degree of subcriticality for normal and postulated accident conditions such as flooding with pure water and low density optimum moderator "misting."

A discussion of the methodology used in the new fuel rack criticality analysis is provided in APP-GW-GLR-030 (Reference 17).

9.1.2 Spent Fuel Storage

9.1.2.1 Design Bases

Spent fuel is stored in high density racks which include integral neutron absorbing material to maintain the required degree of subcriticality. The racks are designed to store fuel of the maximum design basis enrichment. Each rack in the spent fuel pool consists of an array of cells interconnected to each other at several elevations and to a thick base plate at the bottom elevation. These rack modules are free-standing, neither anchored to the pool floor nor braced to the pool wall. The spent fuel storage racks include storage locations for 884 fuel assemblies and five defective fuel assemblies. The Region 1 spent fuel rack layout is shown in Figure 9.1-2. The Region 2 spent fuel rack layout is shown in Figure 9.1-3. The overall spent fuel pool rack layout is presented in Figure 9.1-4. All spent fuel racks will be in place whenever fuel is stored in the spent fuel racks. See Subsection 3.7.5.2, for discussion of site-specific procedures for activities following an earthquake. An activity will be to address measurement of the post-seismic event gaps between spent fuel racks and to take appropriate corrective actions.

The design of the spent fuel racks is such that a fuel assembly cannot be inserted into a location (i.e., between racks) other than a location designed to receive an assembly. Insertion of a fuel assembly into a fuel pool (vs. rack) location not designed to receive it (i.e., tool storage area, adjacent to the defective fuel cells and wall) is prevented administratively and addressed in Subsection 9.1.2.3.

AP1000 equipment, seismic and ASME Code classifications are discussed in Section 3.2. The requirements of ASME Section III, Division I, Article NF3000 are used as the criteria for evaluation of stress analyses. The materials are procured in accordance with ASME Section III, Division I, Article NF2000. Criticality analyses are performed in accordance with the requirements of ANSI N16.1-75, Nuclear Criticality Safety in Operations with Fissionable Materials Outside Reactors (Reference 1); analysis codes are validated against the requirements of ANSI N16.9-75, Validation of Calculational Methods for Nuclear Criticality Safety (Reference 2); and overall requirements for fuel storage are in accordance with ANSI N210-76, Design Objectives for Light Water Reactor Spent Fuel Storage Facilities at Nuclear Power Stations (Reference 3).

The stress analysis of the spent fuel racks satisfies all of the applicable provisions in NRC Regulatory Guide 1.124, Revision 1 for components designed by the linear elastic analysis method (Reference 22).

The spent fuel pool is designed to preclude inadvertent draining of the water from the pool.

9.1.2.2 Facilities Description

The spent fuel storage facility is designed to the guidelines of ANS 57.2 (Reference 4). The spent fuel storage facility is located within the seismic Category I auxiliary building fuel handling area. The walls of the spent fuel pool are an integral part of the seismic Category I auxiliary building structure. The facility is protected from the effects of natural phenomena such as earthquakes (Subsection 3.7.2), wind and tornados (Section 3.3), floods (Section 3.4), and external missiles (Section 3.5).

The facility is designed to maintain its structural integrity following a safe shutdown earthquake and to perform its intended function following a postulated event such as a fire. Refer to Subsection 1.2.4.3 for further discussions of the auxiliary building fuel handling area.

Nonseismic equipment in the vicinity of the spent fuel storage racks is evaluated to confirm that its failure could not result in an increase of K_{eff} beyond the maximum allowable K_{eff}. Refer to Subsection 3.7.3.13 for a discussion of the nonseismic equipment evaluation.

The spent fuel pool provides storage space for spent fuel. The pool is approximately 42.5 feet deep and constructed of reinforced concrete and concrete filled structural modules as described in Subsection 3.8.4. The portion of the structural modules in contact with the water in the pool is stainless steel and the reinforced concrete portions are lined with a stainless steel plate. The minimum water volume of the pool is about 190,500 gallons of borated water (including racks without fuel at a water level 15 inches below the operating deck) with a nominal boron concentration of 2700 ppm. Figures 1.2-7 through 1.2-10 show the spent fuel pool and other features of the fuel handling area.

The connections for the drain and makeup lines are located to preclude the draining of the spent fuel pool due to a break in a line or failure of a pump to stop. The connection for the spent fuel cooling pumps' suction is located below normal water level and above the level needed to provide sufficient water for shielding and for cooling of the fuel if the spent fuel pool cooling system is unavailable. Skimmers that normally follow the water level surface do not travel below the level of the spent fuel cooling suction. Connections for suction to the chemical volume and control system are located between the normal water level and the spent fuel cooling system pumps' suction connection level. Pipes which discharge into the spent fuel pool include a siphon break between the normal water level and the level of the spent fuel cooling system pumps' suction connection.

The piping which returns the water to the spent fuel pool from the spent fuel pool cooling system enters the pool at the opposite end from the spent fuel pool cooling system pumps' suction

connection. The piping arrangement and location ensure thorough mixing of the cooled water into the pool to prevent stagnant or hot regions.

A gated opening connects the spent fuel pool and fuel transfer canal. The fuel transfer canal is connected to the in-containment refueling cavity by a fuel transfer tube. The spent fuel transfer operation is completed underwater, and the waterways are of sufficient depth to maintain a minimum of 8.75 feet of shielding water above the active fuel height of spent fuel assemblies. A metal gate with gasket assembly separates the spent fuel pool and fuel transfer canal. This allows the fuel transfer canal to be drained without reducing the water level in the spent fuel pool. During normal operation, this gate remains open and is only closed to drain the canal. The bottom of the fuel transfer canal has a drain connected to safety-related piping and isolation valves which prevents inadvertent draining after a seismic event. Subsection 9.1.3 further addresses the minimum water level in the spent fuel pool.

Next to the spent fuel pool and accessible by another gated, gasketed opening is a cask loading pit. The cask pit is a lined reinforced concrete structure of the auxiliary building fuel handling area. It is provided for underwater loading of fuel into a shipping cask and cask draining/decontamination prior to cask transshipment from the AP1000 site. The bottom of the cask loading pit has a drain connected to safety-related piping and isolation valve which prevents inadvertent draining after a seismic event. The gate between the spent fuel pool and the cask loading pit is normally closed and opened during refueling and cask loading options. The cask loading pit can be used as a source of water for low pressure injection to the reactor coolant system via the normal residual heat removal pumps during an event in which the reactor coolant system pressure and inventory decrease.

The fuel handling machine traverses the spent fuel pool, the fuel transfer canal, the cask loading pit, the new fuel storage pit, and the rail car bay. It is used in the movement of both new and spent fuel assemblies. The fuel handling machine is used to transfer new fuel assemblies from the new fuel storage rack into the spent fuel pool. A new fuel elevator in the spent fuel pool lowers the new fuel to an elevation accessible by the fuel handling machine.

The cask handling crane is used for operations involving the spent fuel shipping cask. The cask handling crane traverses the auxiliary building and a portion of the fuel handling area. The cask handling crane's path is designed such that the cask cannot pass over the spent fuel pool, new fuel pit, or fuel transfer canal. This precludes the movement of loads greater than fuel components over stored fuel in accordance with Regulatory Guide 1.13.

During fuel handling operations, a ventilation system removes gaseous radioactivity from the atmosphere above the spent fuel pool. Refer to Subsection 9.4.3 for a discussion of the radiologically controlled area ventilation system, Section 11.5 for process radiation monitoring, Subsection 9.1.3 for the spent fuel pool cooling system, and Subsection 12.2.2 for airborne activity levels in the fuel handling area.

9.1.2.2.1 Spent Fuel Rack Design

A. Design and Analysis of Spent Fuel Racks

The spent fuel pool rack layout contains both Region 1 rack modules with a center-to-center spacing of nominally 10.93 inches and Region 2 rack modules with a center-to-center spacing of nominally 9.04 inches. Additionally, there are five defective fuel assembly storage cells with a center-to-center spacing of nominally 11.65 inches. These rack module configurations provide adequate separation between adjacent fuel assemblies with neutron absorbing material to maintain a subcritical array.

The material used in the AP1000 fuel storage racks is Metamic®, a metal matrix composite material consisting of a Type 6061 aluminum alloy matrix reinforced with boron carbide (B_4C). The Metamic is in the form of sheets having a nominal thickness of 0.106 inches and a minimum ^{10}B areal density of 0.0304 gm/cm^2 (minimum 30.5 wt% B_4C). The panels are not anodized, but will be cleaned via glass bead blasting and washing with demineralized water to ensure removal of surface contamination prior to installation.

No credit is taken for Metamic in the rack structural analysis, and the Metamic panels are completely encased in (and supported by) stainless steel panels (which are vented) so the mechanical properties of the Metamic do not affect the performance of the panels. Nevertheless, mechanical properties (obtained from Reference 24) are summarized below:

Property	Value
Density	2.646 gm/cm^3
Yield Strength	33,000 psi
Ultimate Strength	40,000 psi
Elongation	1.8%

With the exception of density, which is given at 30 wt% B_4C, the properties in this table are all specified for 31 wt% B_4C. Metamic has been evaluated by the NRC for use in spent fuel pool applications (Reference 25).

The Metamic panels are suitable for long-term use in the spent fuel pool environment. The Metamic panels are potentially affected by the pool's temperature, aqueous environment, and radiation field. The effects of each of these parameters are discussed separately in the following paragraphs.

The pool's temperature will exceed the ambient temperature as a result of the stored fuel heat, but will be maintained at or below 120°F. Elevated temperature testing of 31 wt% B_4C Metamic was performed at 750°F in air for nearly a year (Reference 24), with no reduction in thickness, no change in weight, no reduction on ^{10}B content, and no change in density. The complete lack of dimensional or chemical changes in these elevated rate tests is sufficient to show that temperatures up to 120°F, even for 60 years or more, will not detrimentally affect the condition of the Metamic panels.

The aqueous environment of the pool with a nominal dissolved Boron concentration of 2,700 ppm will be slightly acidic. Elevation temperature (200°F) corrosion rate testing of 32 wt% B_4C Metamic (Reference 24) for 90 days indicated that "no corrosion was observed" and there was "no significant change in ^{10}B areal density." The complete lack of any chemical changes in the tests, combined with the knowledge of the effects of temperature and pH on corrosion rate, is sufficient to show that the aqueous spent fuel pool environment, even for 60 years, will not detrimentally affect the condition of the Metamic panels.

Samples of 31 wt% B_4C Metamic were subjected to a radiation field with both gamma (1.5×10^{11} rads) and fast neutron (1.7×10^{18} nvt to 5.8×10^{19} nvt) components. Conclusions of post-irradiation testing were: Metamic exhibits excellent dimensional stability after irradiation and there was no change in Boron-10 areal density (Reference 24). The complete lack of dimensional or chemical changes as a result of these high radiation exposures is sufficient to show that the expected radiation field in the pool, even for 60 years, will not detrimentally affect the condition of the Metamic panels. A coupon tree with 14 coupons is provided with the spent fuel racks. Coupons are nominally 6 inches wide by 8 inches long by 0.106 inches thick. Each coupon is representative of the panel from which it is cut, including the presence of any scratches or other surface irregularities. The initial B_4C content of Metamic is determined from the amounts of B_4C

and aluminum powder mixed together in the manufacturing process. If for example, 1000 pounds of aluminum and 250 pounds of B_4C are used to manufacture one lot of material, it would be 20 percent B_4C. This approach has been validated by Metamic LLC, the supplier of the Metamic poison material, and Holtec International, the rack designer.

The recommended Metamic monitoring schedule is as follows:

- End of Cycle 1 – Remove First Coupon
- End of Cycle 2 – Remove Second Coupon
- End of Cycle 3 – Remove Third Coupon
- End of Cycle 5 – Remove Fourth Coupon
- End of Cycle 10 – Remove Fifth Coupon
- End of Cycle 20 – Remove Sixth Coupon
- End of Cycle 30 – Remove Seventh Coupon
- End of Cycle 40 – Remove Eighth Coupon

If the plant is operated on an 18-month cycle, eight coupons provide 60 years of Metamic surveillance. There are six additional coupons provided.

This coupon tree will be used to monitor the condition of the Metamic over the 60-year life of the spent fuel racks.

The seismic and stress analyses of the spent fuel racks consider the various conditions of full, partially filled, and empty fuel assembly loadings. The racks are evaluated for the safe shutdown earthquake condition and seismic Category I requirements. A detailed stress analysis is performed to verify the acceptability of the critical load components and paths under normal and faulted conditions. The racks rest on the pool floor and are evaluated to determine that under loading conditions the rack-to-rack and rack-to-wall impacts are acceptable on both the racks and the pool walls.

The dynamic response of the fuel rack assembly during a seismic event is the condition which produces the governing loads and stresses on the structure.

Loads and Load Combinations

The applied loads to the spent fuel racks are:

- Dead loads
- Live loads - effect of lifting the empty rack during installation
- Seismic forces of the safe shutdown earthquake
- Fuel assembly drop analysis
- Fuel handling machine uplift - postulated stuck fuel assembly
- Thermal loads

Table 9.1-1 shows loads and load combinations that are considered in the analyses of the spent fuel racks including those given in Reference 5.

The margins of safety for the racks in the multi-direction seismic event are produced using loads obtained from the seismic analysis based on the simultaneous application of three statistically independent, orthogonal accelerations.

B. Fuel Handling Machine Uplift Analysis

An analysis is performed to demonstrate that the racks can withstand a maximum uplift load of 5000 pounds. This load is applied to a postulated stuck fuel assembly. Resultant rack stresses are evaluated against the stress limits and are demonstrated to be acceptable. It is also demonstrated that there is no change in rack geometry of a magnitude which causes the criticality criteria to be violated.

C. Fuel Assembly Drop Accident Analysis

In the unlikely event of dropping a fuel assembly, accidental deformation of the rack is determined and evaluated in the criticality analysis to demonstrate that it does not cause the criticality criterion to be violated. The analysis considers only the case of a dropped spent, irradiated fuel assembly in a flooded pool and takes credit for dissolved boron in the water.

For the analysis of a dropped fuel assembly, two accident conditions are postulated. The first accident condition conservatively assumes that the weight of a fuel assembly, control rod assembly, and handling tool (3100 pounds total) impacts the top of the fuel rack from a drop height of 3 feet above the top of the rack. Both a straight drop and an inclined drop are included in the assessment. Calculations are performed to demonstrate that the impact energy is absorbed by the dropped fuel assembly, the rack cells, and the rack base plate assembly. Under these faulted conditions, credit is taken for dissolved boron in the pool water.

The second accident condition assumes that the dropped fuel assembly, control rod assembly, and handling tool (3100 pounds) fall straight through an empty cell and impact the rack base plate from a drop height of 3 feet above the top of the rack. The analysis is performed and demonstrates that the impact energy is absorbed by the fuel assembly and the rack base plate. At an interior rack location, base plate deformation is limited so that the pool liner is not impacted. At a support pad location, the stresses developed in the pool liner are evaluated to be within allowable limits such that the liner integrity is maintained. Under these faulted conditions, credit is taken for dissolved boron in the pool water.

D. Fuel Rack Sliding and Overturning Analysis

Consistent with the criteria of Reference 5, the racks are evaluated for overturning and sliding displacement due to earthquake conditions under the various conditions of full, partially filled, and empty fuel assembly loadings.

E. Failure of the Fuel Handling Machine

The fuel handling machine is a seismic Category II component. The fuel handling machine is evaluated to show that it does not collapse into the spent fuel pool as a result of a seismic event. The fuel handling machine is also designed to maintain its load carrying and structural integrity functions during a safe shutdown earthquake.

F. Internally Generated Missiles

The spent fuel handling area does not contain any credible sources of internally generated missiles.

Stress analyses are performed by the vendor using loads developed by the dynamic analysis. Stresses are calculated at critical sections of the rack and compared to acceptance criteria referenced in ASME Section III, Division I, Article NF3000.

9.1.2.3 Safety Evaluation

The design and safety evaluation of the spent fuel racks is in accordance with Reference 5. The racks, being Equipment Class D and seismic Category I structures, are designed to withstand normal and postulated dead loads, live loads, loads resulting from thermal effects, and loads caused by the safe shutdown earthquake event.

The design of the racks is such that K_{eff} remains less than or equal to 0.95 under design basis conditions, including fuel handling accidents. Inadvertent insertion of a fuel assembly between the rack periphery and the pool wall or placement of a fuel assembly across the top of a fuel rack is considered a postulated accident, and as such, realistic initial conditions such as boron in the pool water are assumed. These accident conditions have an acceptable K_{eff} of less than 0.95. The criticality evaluation, which meets the requirements of 10 CFR 50.68, Paragraph b (Reference 21), considers the inherent neutron absorbing effect of the materials of construction, including fixed neutron absorbing "poison" material. Soluble boron in the spent fuel pool and assembly burnup is used as reactivity credits.

The racks are also designed with adequate energy absorption capabilities to withstand the impact of a dropped fuel assembly from the maximum lift height of the fuel handling machine. Handling equipment (cask handling crane) capable of carrying loads heavier than fuel components is prevented by design from carrying loads over the fuel storage area. The fuel storage racks can withstand an uplift force greater than or equal to the uplift capability of the fuel handling machine (5000 pounds).

Materials used in rack construction are compatible with the storage pool environment, and surfaces that come into contact with the fuel assemblies are made of annealed austenitic stainless steel. Structural materials are corrosion resistant and will not contaminate the fuel assemblies or pool environment. Neutron absorbing "poison" material used in the rack design has been qualified for the storage environment. Venting of the neutron absorbing material is considered in the detailed design of the storage racks.

Design of the spent fuel storage facility is in accordance with Regulatory Guide 1.13. A discussion of the methodology used in the spent fuel pool criticality analysis is provided in APP-GW-GLR-029P (Reference 20).

9.1.3 Spent Fuel Pool Cooling System

The spent fuel pool cooling system (SFS) is designed to remove decay heat which is generated by stored fuel assemblies from the water in the spent fuel pool. This is done by pumping the high temperature water from within the fuel pool through a heat exchanger, and then returning the water to the pool. A secondary function of the spent fuel pool cooling system is clarification and purification of the water in the spent fuel pool, the transfer canal, and the refueling water. A listing of the major functions of the spent fuel pool cooling system and the corresponding modes of operation is provided below:

- **Spent fuel pool cooling** - Remove heat from the water in the spent fuel pool during operation to maintain the pool water temperature within acceptable limits.
- **Spent fuel pool purification** - Provide purification and clarification of the spent fuel pool water during operation.
- **Refueling cavity purification** - Provide purification of the refueling cavity during refueling operations.

- **Water transfers** - Transfer water between the in-containment refueling water storage tank (IRWST) and the refueling cavity during refueling operations.

- **In-containment refueling water storage tank purification** - Provide purification and cooling of the in-containment refueling water storage tank during normal operation.

9.1.3.1 Design Basis

9.1.3.1.1 Safety Design Basis

The spent fuel pool cooling system has the safety-related function of containment isolation. See Subsection 6.2.3 for the containment isolation system. Safety-related makeup to the spent fuel pool is discussed in Subsection 9.1.3.4.3.

9.1.3.1.2 Power Generation Basis

The principal functions of the spent fuel pool cooling system are outlined above. The spent fuel pool cooling system is designed to perform its function in a reliable and failure tolerant manner. This reliability is achieved with the use of rugged and redundant equipment. The spent fuel pool cooling system is not a safety-related system and is not required to operate following events such as earthquake, fire, passive failures or multiple active failures.

9.1.3.1.3 Spent Fuel Pool Cooling

9.1.3.1.3.1 Partial Core

The spent fuel pool cooling system is designed to remove heat from the spent fuel pool such that the spent fuel pool water temperature will be ≤ 120°F following a partial core fuel shuffle refueling. The system is designed to perform this function based on the following:

- The assumed heat load is based on the decay heat generated by the accumulated maximum number of fuel assemblies stored in the fuel pool, which includes 44% of a core (69 assemblies) being placed into the pool beginning at 120 hours after shutdown.

- Both trains of the spent fuel pool cooling system are assumed to be operating.

- While the reactor is shut down, the component cooling water system (CCS) supply temperature used to determine the performance of the spent fuel pool cooling system (SFS) heat exchangers is based on a service water system heat sink with a maximum normal ambient design wet bulb temperature as defined in Chapter 2, Table 2.0-201. SFS performance following restart after a normal refueling is affected by a change in maximum safety wet bulb temperature. Calculations confirm that spent fuel pool temperature remains below 115°F with a CCS supply temperature of 97°F at the specified spent fuel pool loading condition and decay time on the fuel fraction just replaced during the previous 17-day refueling outage.

  While the maximum CCS temperature expected for Turkey Point Units 6 & 7 is 97.4°F, an increase of 0.4°F in CCS supply temperature will produce a similar increase in the spent fuel pool maximum temperature; therefore, the requirement to maintain spent fuel temperature below 120°F is met with margin.

- While the reactor is at power, the CCS supply temperature to the SFS heat exchangers is based on a service water system heat sink with a maximum safety ambient design wet bulb temperature as defined in Chapter 2, Table 2.0-201.

9.1.3.1.3.2 Full Core Off-Load

The AP1000 normal refueling basis heat load is from a full core off-load. The spent fuel pool cooling system is designed to remove heat from the spent fuel pool such that the spent fuel pool water temperature will be ≤ 120°F following a full core off-load based upon a service water heat sink at a maximum normal ambient wet bulb temperature as defined by Chapter 2, Table 2.0-201. The system is designed to perform this function based on the following:

- The assumed heat load is based on the decay heat generated by the accumulated maximum number of fuel assemblies stored in the fuel pool, plus one full core placed in the pool at 120 hours after shutdown. The time during the plant operating cycle at which the full core off-load occurs is chosen to maximize the required spent fuel pool cooling system heat load.

- The spent fuel pool cooling system is assumed to function with its full set of equipment available. One train of the normal residual heat removal system (RNS) is also connected to the spent fuel pool and provides cooling as described in Subsection 5.4.7.4.5.

- While the reactor is shut down, the CCS supply temperature used to determine the performance of the SFS heat exchangers is based on a service water system heat sink with a maximum normal ambient design wet bulb temperature as defined in Chapter 2, Table 2.0-201.

- While the reactor is at power, the CCS supply temperature to the SFS heat exchangers is based on a service water system heat sink with a maximum safety ambient design wet bulb temperature as defined in Chapter 2, Table 2.0-201.

- Assuming the heat load scenario identified above, the spent fuel pool water temperature will be < 140°F with one SFS cooling train and one RNS train in operation.

9.1.3.1.4 Spent Fuel Pool Purification

The spent fuel pool cooling system removes radioactive corrosion products, fission product ions and dust to maintain low spent fuel pool (SFP) activity levels and to maintain water clarity during all modes of plant operation. The spent fuel pool cooling system purification capability is such that the occupational radiation exposure (ORE) is minimized to support as-low-as-reasonably-achievable (ALARA) goals. The spent fuel pool cooling system clarification capability is sufficient to permit necessary operations that must be conducted in the spent fuel pool area. The spent fuel pool cooling system is designed to perform its purification function in accordance with the following additional criteria:

- The spent fuel pool cooling system is designed to limit exposure rates to personnel on the spent fuel pool fuel handling machine to less than 2.5 millirem per hour. This corresponds to an activity level in the water of approximately 0.005 microcurie per gram for the dominant gamma-emitting isotopes at the time of refueling.

- The spent fuel pool cooling system flow rate for one train shall be more than that necessary to provide two water volume changes in 24 hours for the spent fuel pool water.

9.1.3.1.5 Refueling Cavity Purification

The spent fuel pool cooling system removes radioactive corrosion products, fission product ions and dust to maintain low refueling cavity activity levels and to maintain water clarity during refueling operations. The spent fuel pool cooling system purification capability is such that the occupational radiation exposure is minimized to support ALARA goals. Furthermore, the spent fuel pool cooling

system clarification capability is sufficient to permit necessary refueling operations that must be conducted in the refueling cavity. The spent fuel pool cooling system is designed to perform its purification function in accordance with the following additional criterion:

- The spent fuel pool cooling system is designed to limit exposure rates to personnel on the refueling machine to less than 2.5 millirem per hour. This corresponds to an activity level in the water of approximately 0.005 microcurie per gram for the dominant gamma-emitting isotopes at the time of refueling.

9.1.3.1.6 Water Transfers

The spent fuel pool cooling system is designed to transfer water from the in-containment refueling water storage tank to the refueling cavity prior to a refueling and then back to the in-containment refueling water storage tank upon completion of the refueling operations. The spent fuel pool cooling system is designed to perform this function in accordance with the AP1000 refueling schedule.

9.1.3.1.7 In-Containment Refueling Water Storage Tank Purification

The spent fuel pool cooling system removes radioactive corrosion products and fission ions to maintain low in-containment refueling water storage tank activity levels during normal plant operation prior to a scheduled refueling. The spent fuel pool cooling system is designed to maintain the water in the in-containment refueling water storage tank consistent with activity requirements of the water in the refueling cavity during a refueling.

9.1.3.1.8 Spent Fuel Pool Water Tritium Concentration Control

The concentration of tritium in the spent fuel pool water is maintained at less than 0.5 μCi/g to provide confidence that the airborne concentration of tritium in the fuel handling area is within 10 CFR 20, Appendix B limits (see Subsection 12.2.2). The tritium concentration in the spent fuel pool is reduced, if necessary, by transferring a portion of the spent fuel pool water to the liquid radwaste system for discharge and replacing it with non-tritiated water.

9.1.3.2 System Description

The spent fuel pool cooling system is a non-safety-related system. The safety-related function of cooling and shielding the fuel in the spent fuel pool is performed by the water in the pool. A simplified sketch of the spent fuel pool cooling system is included as Figure 9.1-5. The piping and instrumentation diagram for the spent fuel pool cooling system is Figure 9.1-6.

The spent fuel pool cooling system consists of two mechanical trains of equipment. Each train includes one spent fuel pool pump, one spent fuel pool heat exchanger, one spent fuel pool demineralizer and one spent fuel pool filter. The two trains of equipment share common suction and discharge headers. In addition, the spent fuel pool cooling system includes the piping, valves, and instrumentation necessary for system operation.

The spent fuel pool cooling system is designed such that either train of equipment can be operated to perform any of the functions required of the spent fuel pool cooling system independently of the other train. One train is continuously cooling and purifying the spent fuel pool while the other train is available for water transfers, in-containment refueling water storage tank purification, or aligned as a backup to the operating train of equipment.

Each train is designed to process spent fuel pool water. Each pump takes suction from the common suction header and discharges directly to its respective heat exchanger. The outlet piping branches

into parallel lines. The purification branch is designed to process approximately 20% of the cooling flow while the bypass branch passes the remaining.

Each purification branch is routed directly to a spent fuel pool demineralizer. The outlet of the demineralizer is to a spent fuel pool filter. The outlet of the filter is then connected to the bypass branch which forms a common line that connects to the discharge header.

The spent fuel pool cooling system suction header is connected to the spent fuel pool at two locations. The main suction line connects to the spent fuel pool at an elevation 6 feet below the operating deck. Two skimmer connections take suction from the water surface of the spent fuel pool. This suction arrangement prevents the spent fuel pool from inadvertently being drained below a level that would prevent the water in the spent fuel pool from performing its safety-related function. This arrangement also eliminates the need for a separate skimmer circuit arrangement.

The spent fuel pool pump suction header is connected to the in-containment refueling water storage tank and the refueling cavity. This enables purification of the in-containment refueling water storage tank or the refueling cavity and allows for the transfer of water between the in-containment refueling water storage tank and the refueling cavity.

The spent fuel pool pump suction header is also connected to the fuel transfer canal and the cask loading pit. These connections are provided primarily for the transfer of water from the fuel transfer canal to the cask loading pit. Water that is normally stored in the fuel transfer canal can be sent to the cask loading pit and vice versa.

The spent fuel pool is initially filled for use with water having a nominal boron concentration of 2700 ppm. Demineralized water can be added for makeup purposes, including replacement of evaporative losses, from the demineralized water transfer and storage system. Boron may be added to the spent fuel pool from the chemical and volume control system.

The spent fuel pool water may be separated from the water in the transfer canal by a gate. The gate enables the transfer canal to be drained to permit maintenance of the fuel transfer equipment.

9.1.3.3 Component Description

The general descriptions and summaries of the design requirements for the spent fuel pool cooling system components are provided below. See Table 9.1-2. The key equipment parameters for the spent fuel pool cooling system components are contained in Table 9.1-3. Additional information regarding the applicable codes and classifications is also available in Section 3.2.

9.1.3.3.1 Spent Fuel Pool Pumps

Two spent fuel pool pumps are provided. These pumps are single stage, horizontal, centrifugal pumps having a coupled pump motor shaft driven by an ac powered induction motor. A mechanical seal is used to prevent leakage to the atmosphere. The pumps have flanged suction and discharge nozzles.

Each pump is sized to provide the flow required by its respective heat exchanger for removal of its design basis heat load. The pumps are redundant for normal refueling heat loads.

9.1.3.3.2 Spent Fuel Pool Heat Exchangers

Two spent fuel pool heat exchangers are installed to provide redundant spent fuel heat removal capability for normal refueling heat loads. These heat exchangers are plate type heat exchangers

constructed of austenitic stainless steel. Spent fuel pool water circulates through one side of the heat exchanger while component cooling water (CCW) circulates through the other side.

9.1.3.3.3 Spent Fuel Pool Demineralizers

Two mixed bed type demineralizers are provided to maintain spent fuel pool purity. The demineralizers are initially charged with a hydrogen type cation resin and hydroxyl type anion resin to remove fission and corrosion products. The demineralizers will be borated during initial operation with boric acid. Each demineralizer is sized to accept the maximum purification flow from its respective cooling train. The vessels are constructed of austenitic stainless steel.

9.1.3.3.4 Spent Fuel Pool Filters

Two spent fuel pool filters are provided, one downstream of each demineralizer in the purification branch line of each mechanical train. The filters are sized to collect small particulates and resin fines passed by the demineralizer. They are also sized to pass the maximum design purification flow. The filter assembly is constructed of austenitic stainless steel with disposable filter cartridges.

9.1.3.3.5 Spent Fuel Pool Cooling System Valves

Spent fuel pool cooling system valves operate in low temperature and pressure service. Commercially available valves are used in accordance with the codes and standard of Section 3.2. The basic material of construction is stainless steel.

9.1.3.3.5.1 Locked-In-Position Valves

Refueling Cavity Drain Isolation Valve

There is one locked-open valve in the line from the refueling cavity to the steam generator 2 compartment. This valve is provided so that water in the refueling cavity cannot be trapped and be unavailable for passive recirculation cooling by the passive core cooling system (PXS) following an accident. This valve is locked-closed during refueling operations when the refueling cavity is flooded.

Refueling Cavity Connection for Containment Flooding Isolation Valve

There is one locked-open valve in the line that goes through the wall of the refueling canal to provide a water flow path between the refueling canal and the containment floodup water volume following an accident. This valve is locked open so that as the containment floods, the refueling canal will flood before the compartments that contain passive core cooling system components, which are used for safe shutdown. This valve is locked-closed during refueling operations when the refueling cavity is flooded.

Fuel Transfer Canal Drain Valve

There is one locked-closed valve in the bottom connection to the fuel transfer canal. This valve is provided to prevent inadvertent lowering of the spent fuel pool water level in the event that the gate between the fuel transfer canal and spent fuel pool is open during a seismic event that causes a break in the downstream piping.

9.1.3.3.5.2 Remotely-Operated Valves

Containment Isolation Valves

The spent fuel pool cooling system contains two lines which penetrate containment. They are the lines from the refueling cavity/in-containment refueling water storage tank to the spent fuel pool cooling system suction header and the return line to the refueling cavity/in-containment refueling

water storage tank. Two remotely operated valves, one located inside and one outside containment, are provided in the line to the suction header. One remotely operated valve located outside containment and one check valve located inside containment are provided in the return line. These valves are normally closed and are opened only for purification or water transfers between the in-containment refueling water storage tank and the refueling cavity. They are controlled from the main control room. See Subsection 6.2.3.

9.1.3.3.6 Piping Requirements

Spent fuel pool cooling system piping is made of austenitic stainless steel. Piping joints and connections are welded, except where flanged connections are required as indicated on the spent fuel pool cooling system piping and instrumentation diagram (Figure 9.1-6).

9.1.3.3.7 Reactor Cavity Seal Ring

The AP1000 reactor cavity seal ring is part of the fuel handling system and is a permanent welded seal ring used to provide the seal between the vessel flange and the refueling cavity floor. The reactor cavity seal ring does not use pneumatic seals and is not subject to a gross failure due to loss of a seal.

Leakage is not expected with this design. Leakage past or through the seal would not significantly affect the water level in the refueling canal and would be detected as an increase in water level in the containment sump. Water level in the sump is a key parameter in reactor coolant leak detection.

9.1.3.3.8 Reactor Cavity Connections

The spent fuel pool cooling system contains connections to the refueling cavity to prevent excessive holdup of water in the reactor cavity following an accident. The piping connection facilitates draining of the reactor cavity to the steam generator compartment following a postulated accident. The line connects at the bottom of the reactor cavity and discharges to a steam generator compartment, and contains a manual locked-open isolation valve and two check valves in series. The isolation valve is closed during refueling operations to facilitate flooding of the reactor cavity for refueling operations.

The spent fuel pool cooling system also contains a connection between the refueling cavity and Room 11300 to provide a water flow path following an accident. This connection is a single pipe through the wall of the refueling cavity and contains a manual locked-open isolation valve. This connection is provided so that as the containment floods, the refueling canal will flood before the compartments that contain passive core cooling system components, which are used for safe shutdown. Subsection 3.4.1.2.2.1 provides a discussion of post-accident containment flooding. The isolation valve is locked-closed during refueling operations to enable flooding of the reactor cavity for refueling operations.

Other connections are provided to the refueling cavity to facilitate proper draining, filling, and purification of the reactor cavity to support refueling operations.

9.1.3.4 System Operation and Performance

The operation of the spent fuel pool cooling system for the pertinent phases of plant operation are described in the following paragraphs.

9.1.3.4.1 Normal Operation

During normal plant operation, one spent fuel pool cooling system mechanical train of equipment is operating. The operating train is aligned to provide spent fuel pool cooling and purification. The other

train is available to perform the other functions of the spent fuel pool cooling system such as water transfers or in-containment refueling water storage tank purification.

9.1.3.4.1.1 Ion Exchange Media Replacement

The initial and subsequent fill of ion exchange media is made through a resin fill nozzle on the top of the ion exchange vessel. When the media is ready to be transferred to the solid radwaste system, the vessel is isolated from the process flow. The flush water line is opened to the sluice piping and demineralized water is pumped into the vessel through the normal process outlet connection upward through the media retention screen. The media fluidizes in the upward, reverse flow. When the bed has been fluidized, the sluice connection is opened and the bed is sluiced to the spent resin tanks in the solid radwaste system (WSS). Demineralized water flow continues until the bed has been removed and the sluice lines are flushed clean of spent resin.

9.1.3.4.1.2 Filter Cartridge Replacement

Replacement of spent filter cartridges is performed as described in Subsection 11.4.2.3.2.

9.1.3.4.2 Refueling

Both spent fuel pool mechanical trains are in operation during refueling. One train is aligned for spent fuel pool cooling and purification throughout the refueling. The other train performs various support functions during the refueling.

Initially the standby mechanical train is used to purify the water in the in-containment refueling water storage tank to prepare for the refueling. When the refueling cavity is ready to be flooded, the pump aligned for in-containment refueling water storage tank purification is stopped and valves are aligned to gravity drain the in-containment refueling water storage tank to the refueling cavity. Eventually the drain rate slows down and the in-containment refueling water storage tank and the refueling cavity have the same water level. At this time, the standby spent fuel pool pump is aligned to transfer the additional in-containment refueling water storage tank water into the refueling cavity.

This water transfer method improves water clarity in the refueling cavity during refueling operations as compared to conventional pressurized water reactors that have performed this function with their residual heat removal system by flooding up through the reactor vessel into the refueling cavity.

Once the refueling cavity is flooded, the standby mechanical train is re-aligned to cool and purify the refueling cavity. This mode of operation continues as needed. If the heat load is such that both pumps and heat exchangers are needed to cool the spent fuel pool, then the spent fuel pool cooling system can be aligned for that operation.

At the completion of the refueling, the standby spent fuel pool pump is used to transfer the water in the refueling cavity back to the in-containment refueling water storage tank. Once this is complete, the standby train can be aligned to cool the spent fuel pool or may be placed in standby.

9.1.3.4.3 Abnormal Conditions

The AP1000 spent fuel pool cooling system is not required to operate to mitigate design basis events. In the event the spent fuel pool cooling system is unavailable, spent fuel cooling is provided by the heat capacity of the water in the pool. Connections to the spent fuel pool are made at an elevation to preclude the possibility of inadvertently draining the water in the pool to an unacceptable level.

In the unlikely event of an extended loss of normal spent fuel pool cooling, the water level will drop. Low spent fuel pool level alarms in the control room will indicate to the operator the need to initiate makeup water to the pool. These alarms are provided from safety-related level instrumentation in the spent fuel pool. With the use of makeup water, the pool level is maintained above the spent fuel assemblies for at least 7 days. Initial spent fuel pool water level is controlled by technical specifications. During the first 72 hours any required makeup water is supplied from safety related sources. If makeup water beyond the safety related sources is required between 72 hours and 7 days, water from the passive containment cooling system ancillary water storage tank is provided to the spent fuel pool. The amount of makeup required to provide the 7 day capability depends on the decay heat level of the fuel in the spent fuel pool and is provided as follows:

- When the calculated decay heat level in the spent fuel pool is less than or equal to 4.7 MWt, no makeup is needed to achieve spent fuel pool cooling for at least 72 hours.

- When the calculated decay heat level in the spent fuel pool is greater than 4.7 MWt and less than or equal to 5.6 MWt, safety related makeup from the cask washdown pit is sufficient to achieve spent fuel pool cooling for at least 72 hours. A minimum level of 13.75 feet in the cask washdown pit is provided for this purpose. Availability of the makeup source is controlled by technical specifications.

- When the calculated decay heat level in the spent fuel pool is greater than 5.6 MWt and less than or equal to 7.2 MWt, safety-related makeup from the cask washdown pit and cask loading pit is sufficient to achieve spent fuel pool cooling for at least 72 hours. A minimum level of 13.75 feet in the cask washdown pit and 43.9 feet in the cask loading pit is provided for this purpose. Availability of the makeup sources is controlled by technical specifications.

- When calculated decay heat level in the spent fuel pool is greater than 7.2 MWt makeup from the passive containment cooling water storage tank or passive containment cooling ancillary water storage tank, or combination of the two tanks, is sufficient to achieve spent fuel pool cooling for at least 7 days.

- When the decay heat level in the reactor is at or below 6.0 MW, the passive containment cooling water storage tank is not needed for containment cooling and this water can be used for makeup to the spent fuel pool. This tank provides safety related makeup for at least 72 hours. Between 72 hours and 7 days the tank continues to provide makeup water as required until it is empty. If the passive containment cooling water storage tank empties in less than 7 days, non-safety makeup water can be provided from the passive containment cooling ancillary water storage tank.

- When the decay heat level in the reactor is greater than 6 MW, the water in the passive containment cooling water storage tank is reserved for containment cooling. Safety related spent fuel pool cooling is provided for at least 72 hours from the pool itself and makeup water from the cask washdown pit and cask loading pit. After 72 hours, non-safety related makeup can be provided from the passive containment cooling ancillary water storage tank.

- Minimum volume in the passive containment cooling water storage tank for spent fuel pool makeup is 756,700 gallons. Availability of this makeup source for the first 72 hours is controlled by technical specifications. Minimum volume in the passive containment ancillary water storage tank for spent fuel pool makeup is 201,600 gallons.

Table 9.1-4 provides the calculated timing and spent fuel pool water levels for several limiting event scenarios which would require makeup to the spent fuel pool.

Alignment of the cask washdown pit is accomplished by positioning manual valves located in the waste monitor tank room B (12365) in the auxiliary building. Alignment of the passive containment cooling water storage tank is accomplished by positioning manual valves located in the mid annulus access room (12345) and in the passive containment cooling valve room in the upper shield building. Because these alignments are made by positioning manual valves, they are not susceptible to active failures.

Alignment of the cask loading pit is accomplished by opening the gate, shown in Figure 9.1-6, located between the cask loading pit and the spent fuel pool. The cask loading pit gate should be opened prior to exceeding 5.6 MWt in the spent fuel pool.

Gravity driven flow from the cask washdown pit to the spent fuel pool is provided as the cask washdown pit water level will follow the spent fuel pool level. Figures 9.1-5 and 9.1-6 show the connection of the cask washdown pit to the spent fuel pool.

Gravity driven flow from the passive containment cooling water storage tank is controlled by a manual throttle valve with local flow indication which is set to achieve the desired flow when the makeup is initiated. Figure 6.2.2-1 shows the flow path from the passive containment cooling water storage tank leading to the spent fuel pool and the tie-in to the spent fuel pool is also shown in Figure 9.1-6.

The flow from the passive containment cooling water storage tank (PCCWST) to the spent fuel pool, required to provide sufficient makeup to the spent fuel pool to keep the fuel covered as the pool water boils off, is 118 gpm. This is the maximum flow required at the initiation of makeup flow from the PCCWST during the worst case conditions in the pool, which is a full core offload. The makeup flow rate required decreases with time as the decay heat decreases.

After 72 hours, makeup water from the passive containment cooling ancillary water storage tank can either be pumped (with the passive containment cooling recirculation pumps) to the passive containment cooling water storage tank and then gravity fed to the spent fuel pool as discussed above, or the water can be pumped directly to the spent fuel pool. When the makeup water is pumped directly to the pool, the flow rate is controlled by the same manual throttle valve which is used to set the flow rate when providing gravity driven flow from the passive containment cooling water storage tank.

The flow rates provided from the passive containment cooling ancillary water storage tank (PCCAWST) to the spent fuel pool by the recirculation pumps are 35 gpm or 50 gpm. These are the required flow rates to provide sufficient makeup to the spent fuel pool to keep the fuel covered as the pool water boils off. The plant condition associated with 35 gpm is a loss of power combined with a seismic event when the plant is operating at full power, shortly after startup from a refueling outage. The plant condition associated with 50 gpm is also a loss of power combined with a seismic event, but when the plant is being refueled. This refueling scenario considers the time between completion of plant cooldown and just prior to plant startup once the refueling is complete. With a refueling scenario, additional decay heat is located in the spent fuel pool because of the recent offload and enough decay heat remains in the reactor vessel such that the PCCWST is still required for containment cooling and cannot be used for spent fuel pool makeup. These conditions result in the maximum flow required from the PCCAWST because cooling water must be supplied to both the PCCWST and the spent fuel pool to provide both containment and spent fuel cooling for a period of four days following the initial three days of passive systems operation.

Spent fuel pool level instrumentation is discussed in Subsection 9.1.3.7.

9.1.3.4.3.1 Failure of a Spent Fuel Pool Cooling System Pump

If a spent fuel pool cooling system pump fails when only one pump is operating, an alarm is actuated. Due to the heat capacity of the water in the spent fuel pool, sufficient time exists for the operators to manually align the standby spent fuel pool cooling system train of equipment (pump/heat exchanger) to cool the spent fuel pool.

9.1.3.4.3.2 Leakage from the Spent Fuel Pool Cooling System

The connections from the spent fuel pool cooling system to the pool are such that leakage in the spent fuel pool cooling system will not result in the pool water level falling to unacceptable levels. The heat capacity of the water in the pool is sufficient to allow the operators enough time to locate the leak and repair it. In the most probable scenario, cooling will be maintained by operation of the standby train of equipment. However, if spent fuel pool cooling must be terminated, sufficient time exists to allow for repairs of a leak in the system.

9.1.3.4.3.3 Loss of Offsite Power

The spent fuel pool cooling system pumps can be manually loaded on the respective onsite standby diesel generator in the event of a loss of offsite power. The spent fuel pool cooling system is capable of providing spent fuel pool cooling following this event.

9.1.3.4.3.4 Station Blackout

Following a loss of ac power (off-site power and both standby diesel generators), the heat capacity of the water in the pool is such that cooling of the fuel is maintained. Table 9.1-4 provides the times before boiling would occur in the pool following station blackout for various scenarios as well as the minimum levels of water that would be reached. Water vapor that evaporates from the surface of the spent fuel pool is vented to the outside environment through an engineered relief panel. This vent path maintains the fuel handling area at near atmospheric pressure conditions. The doses resulting from spent fuel pool boiling have been calculated and are included in Chapter 15. The release concentrations at the site boundary are small fractions of the limits specified in 10 CFR 20, Appendix B with no credit for removal of activity by building ventilation systems (which are not available during loss of ac power situations). The equipment in the fuel handling area, rail car bay\filter storage area, and spent resin equipment and piping areas exposed to elevated temperature and humidity conditions as a result of pool boiling does not provide safety-related mitigation of the effects of spent fuel pool boiling or station blackout. The fuel handling area, rail car bay, and spent resin area do not have connecting ductwork with other areas of the radioactively controlled area of the auxiliary building and connecting floor drains have a water seal which prevents steam migration. The environment in these other areas during spent fuel pool steaming is mild with respect to safety-related equipment qualification and affords access for post-accident actions.

Spent fuel pool makeup for long term station blackout can be provided through seismically qualified safety-related makeup connections from the passive containment cooling system. These connections are located in an area of the auxiliary building that can be accessed without exposing operating personnel to excessive levels of radiation or adverse environmental conditions during boiling of the pool. Operating personnel are not required to enter the fuel handling area when normal cooling is not available, and are not required to enter the area to recover normal cooling.

9.1.3.4.3.5 Reactor Coolant System Makeup

During an event in which the reactor coolant system pressure and inventory decrease the normal residual heat removal system pumps are started to provide makeup water to the reactor coolant system when the primary system pressure is sufficiently reduced for injection to start. The AP1000

procedure for post-accident operation of the normal residual heat removal pumps is that the operators align the pumps to the cask loading pit. This is accomplished by the operator opening a motor operated isolation valve (see Subsection 5.4.7.3.3.5) between the cask loading pit and the normal residual heat removal pump suction line. When the water in this pit nears empty, the pump suction is re-aligned to the IRWST/containment recirculation connection so that the pumps can continue to provide injection to the reactor coolant system. The refueling water from the cask loading pit provides additional water into containment (and thus additional driving head) for the post accident containment recirculation. The AP1000 emergency operating procedures will include a restriction on use of this injection method if the gate between the spent fuel pool and the cask loading pit is open at the initiation of the event. In this case the operators will be instructed to close the gate, if possible, before initiating the makeup flow with the normal residual heat removal pumps. Injection from the cask loading pit will only be initiated if the gate can be closed. The gate is normally in the closed position unless cask loading or refueling operations are in progress.

9.1.3.5 Safety Evaluation

The only spent fuel pool cooling system safety-related functions are containment isolation and emergency makeup connections to the spent fuel pool. Containment isolation evaluation is described in Subsection 6.2.3. The following provides the evaluation of the design of the spent fuel pool as well as the spent fuel pool cooling system:

- The spent fuel pool is designed such that a water level is maintained above the spent fuel assemblies for at least 7 days following a loss of the spent fuel pool cooling system, using only onsite makeup water (see Table 9.1-4). The minimum water level to achieve sufficient cooling is the subcooled, collapsed level (without vapor voids) required to cover the top of the fuel assemblies.

- The maximum heat load is assumed to be the heat load for a full core off load immediately following a refueling in which 44 percent of the fuel assemblies were replaced.

- Safety-related makeup water can be supplied to the fuel pool from the fuel transfer canal, cask washdown pit, cask loading pit, and passive containment cooling water storage tank.

- The spent fuel pool cooling system includes safety-related connections from the passive containment cooling water storage tank in the passive containment cooling system to establish safety-related makeup to the spent fuel pool following a design basis event including a seismic event.

- In addition to the safety-related water sources, makeup water is also obtained from the passive containment cooling ancillary water storage tank. Water from this tank can be pumped by the passive containment cooling system recirculation pumps either to the passive containment cooling water storage tank (and then gravity fed to the spent fuel pool), or directly to the spent fuel pool.

Radiation shielding normally provided by the water above the fuel is not required when normal spent fuel pool cooling is not available. Personnel are not permitted in the area when the level in the pool is below the minimum level.

The acceptability of the design of the spent fuel pool cooling system is based on specific General Design Criteria (GDCs) and Regulatory Guides as described in Sections 3.1 and 1.9.

9.1.3.6 Inspection and Testing Requirements

9.1.3.6.1 Preoperational Testing, Analysis, and Inspection

9.1.3.6.1.1 Pump Flow Capability Testing

Each spent fuel pool cooling system pump will be tested. The flow paths will be aligned for normal spent fuel pool cooling by one train of spent fuel pool cooling system components. The flow delivered to each spent fuel pool cooling system heat exchanger will be measured by a flow instrument at the spent fuel pool cooling system pump discharge. The testing confirms that the pumped flow is equal to or greater than the minimum value shown in Table 9.1-3. This is the minimum value for the spent fuel pool cooling system to meet its functional requirement of normal spent fuel pool cooling. The flow delivered to each spent fuel pool cooling system heat exchanger will be measured by a flow instrument at the spent fuel pool cooling system pump discharge. The testing confirms that the pumped flow is equal to or greater than the minimum value shown in Table 9.1-3. This is the minimum value for the spent fuel pool cooling system to meet its functional requirement of normal spent fuel pool cooling.

9.1.3.6.1.2 Heat Transfer Capability Analysis

An analysis will be performed on the spent fuel pool cooling system heat exchangers during heat exchanger design. The analysis is to confirm that the product of the overall heat transfer coefficient and effective heat transfer area, UA, of each heat exchanger is equal to or greater than the minimum value shown in Table 9.1-3. This is the minimum value for the spent fuel pool cooling system to meet its functional requirement of normal spent fuel pool cooling.

9.1.3.6.1.3 Dimensional Inspections

The contained volumes of water in the spent fuel pool, fuel transfer canal and the cask washdown pit are used for cooling the spent fuel by boiling after a prolonged loss of normal spent fuel pool cooling. The inspections are to confirm that the contained volumes are equal to or greater than the minimum values shown in Table 9.1-2. These are the minimum values for the spent fuel pool cooling system to meet its safety-related requirement of spent fuel pool cooling for 3 days after loss of normal cooling.

9.1.3.6.2 Routine Testing

Active components of the spent fuel pool cooling system are either in continuous or intermittent use during normal system operation. Periodic visual inspection and preventive maintenance are conducted.

No specific equipment tests are required since system components are normally in operation when spent fuel is stored in the fuel pool. Sampling of the fuel pool water for gross activity, tritium and particulate matter is conducted periodically.

9.1.3.7 Instrumentation Requirements

The instrumentation provided for the spent fuel pool cooling system is discussed in the following paragraphs. Alarms and indications are provided as noted.

A. Temperature

   Instrumentation is provided to measure the temperature of the water in the spent fuel pool and to give indication as well as annunciation in the main control room when normal temperatures are exceeded.

Instrumentation is also provided to give indication of the temperature of the spent fuel pool water as it leaves either heat exchanger.

B. Pressure

Instrumentation is provided to measure and give indication of the pressures in the spent fuel pool pump suction and discharge lines. Instrumentation is also provided at locations upstream and downstream from the spent fuel pool filter and demineralizer so that pressure differential across this equipment can be determined. High differential pressure across the spent fuel pool filter and demineralizer is annunciated in the main control room.

C. Flow

Instrumentation is provided to measure and give remote indication of the spent fuel pool cooling loop flow downstream of the spent fuel pool pumps. Purification flow is also continuously measured.

D. Level

Safety-related instrumentation is provided to give an alarm in the main control room when the water level in the spent fuel pool reaches the low-low-level setpoint. This instrumentation is used for post-accident monitoring on the spent fuel pool level. (See Table 7.5-1)

All three safety-related spent fuel pool level instruments and associated instrument tubing lines are located below the fuel handling area operating deck and the cask washdown pit. This location provides protection from missiles that may result from damage to the structure over the spent fuel pool. The SFP level instruments associated with PMS divisions A and C are physically separated from the SFP level instrument associated with PMS division B. The safety-related spent fuel pool level instruments measure the water level from the top of the spent fuel pool to the top of the fuel racks. These instruments are conservatively calibrated at a reference temperature suitable for normal spent fuel pool operation on a regular basis and accuracy is not affected by power interruptions.

Non-safety-related instrumentation is provided to give an alarm in the main control room when the water level in the spent fuel pool and the cask loading pit reaches either the high-level or low-level setpoint. Instrumentation in the spent fuel pool is used to alert the operator that the pool is nearing limits for fuel movement. Instrumentation in the cask loading pit is used to alert the operator to a low level when injecting water from the pit into the reactor coolant system with the normal residual heat removal pumps.

9.1.4 Light Load Handling System (Related to Refueling)

The fuel handling and refueling system consists of equipment and structures used for conducting the refueling operation. This system conforms to General Design Criteria as defined in Section 3.1. The light load handling system meets the guidelines of American Nuclear Society (ANS) 57.1 (Reference 6). Figures 1.2-9 and 1.2-14 indicate the relationship between the light load handling system and the fuel handling areas.

9.1.4.1 Design Basis

9.1.4.1.1 Safety Design Basis

The following safety design basis apply to the light load handling system:

A. Fuel handling devices have provisions to avoid dropping or jamming of fuel assemblies during transfer operation.

B. Handling equipment has provisions to avoid dropping of fuel handling devices during the fuel transfer operation.

C. Handling equipment used to raise and lower spent fuel has a limited maximum lift height so that the minimum required depth of water shielding is maintained.

D. The fuel transfer system, where it penetrates the containment, has provisions to preserve the integrity of the containment pressure boundary.

E. Criticality during fuel handling operations is prevented by the geometrically safe configuration of the fuel handling equipment.

F. In the event of a safe shutdown earthquake (SSE), handling equipment cannot fail in such a manner as to prevent required function of seismic Category 1 equipment. The refueling machine is designed to maintain its load carrying and structural integrity functions during a safe shutdown earthquake.

G. The inertial loads imparted to the fuel assemblies or core components during handling operations are less than potential damage causing loads.

H. Physical safety features are provided for personnel who operate handling equipment.

9.1.4.1.2 Power Generation Design Basis

Design criteria for the light load handling system are as follows:

A. The primary design requirement of the equipment is reliability. A conservative design approach is used for load bearing parts.

B. The refueling machine and fuel handling machine are designed and constructed in accordance with applicable portions of the Crane Manufacturers Association of America, Inc. (CMAA), Specification 70 for Class A-1 service (Reference 7).

C. The static design loads for the crane structures and lifting components are normal dead and live loads plus the fuel assembly weight.

D. The allowable stresses for the refueling machine and fuel handling machine structures supporting the weight of a fuel assembly are as specified in the American Institute of Steel Construction (AISC) Manual.

E. The design load on the wire rope hoisting cables does not exceed 0.20 times the average breaking strength. Two independent cables are used, and each is assumed to carry one half the load.

F. Components critical to the operation of the equipment are assembled with the fasteners restrained from loosening under vibration.

9.1.4.2 System Description

The light load handling system consists of the equipment and structures needed for the refueling operation. This equipment is comprised of fuel assemblies, core component and reactor component

hoisting equipment, handling equipment, and a fuel transfer system. The structures associated with the fuel handling equipment are the refueling cavity, the transfer canal, the fuel transfer tube, the spent fuel pool, the cask loading area, the new fuel storage area, and the new fuel receiving and inspection area.

9.1.4.2.1 Fuel Handling Description

The fuel handling equipment is designed to handle the spent fuel assemblies underwater from the time they leave the reactor vessel until they are placed in a container for shipment from the site. Underwater transfer of spent fuel assemblies provides an effective and transparent radiation shield, as well as a reliable cooling medium for removal of decay heat. The boric acid concentration in the water is sufficient to preclude criticality.

The associated fuel handling structures may be generally divided into two areas: the refueling cavity which is flooded only during plant shutdown for refueling, and the spent fuel pool and transfer canal, which is kept full of water. See Subsection 9.1.1.3 for new fuel assembly storage. The new and spent fuel storage areas are accessible to operating personnel. The refueling cavity and the fuel storage area are connected by the fuel transfer tube which is fitted with a quick opening hatch on the canal end and a valve on the fuel storage area end. The hatch is in place except during refueling to provide containment integrity. Fuel is carried through the tube on an underwater transfer car.

Fuel is moved between the reactor vessel and the fuel transfer system by the refueling machine. The fuel transfer system is used to move a fuel assembly and its associated core component between the containment building and the auxiliary building fuel handling area. After a fuel assembly is placed in the fuel container, the lifting arm pivots the fuel assembly to the horizontal position for passage through the fuel transfer tube. After the transfer car transports the fuel assembly through the transfer tube, the lifting arm at that end of the tube pivots the assembly to a vertical position so that the assembly can be lifted out of the fuel container.

In the fuel handling area, fuel assemblies are moved about by the fuel handling machine. Initially, a short tool is used to handle new fuel assemblies, but the new fuel elevator must be used to lower the assembly to a depth at which the fuel handling machine can place the new fuel assemblies into or out of the spent fuel storage racks.

Decay heat, generated by the spent fuel assemblies in the fuel pool is removed by the spent fuel pool cooling and cleanup system. After a sufficient decay period, the spent fuel assemblies are removed from the fuel racks and loaded into a spent fuel shipping cask for removal from the site.

9.1.4.2.2 Refueling Procedure

New fuel assemblies received for refueling are removed one at a time from the shipping container and moved into the new fuel assembly inspection area. After inspection, the accepted new fuel assemblies are stored in the new fuel storage rack. For the initial core load, some new fuel assemblies may be stored in the spent fuel pool.

Prior to initiating the refueling operation, the reactor coolant system (RCS) is borated and cooled down to refueling shutdown conditions as specified in the Technical Specifications. Criticality protection for refueling operations is specified in the Technical Specifications. The following significant points are addressed by the refueling procedure:

- The refueling water and the reactor coolant contain a nominal boron concentration of 2700 ppm boron. This concentration is sufficient to keep the core five percent $\Delta k/k$ subcritical during the refueling operations.

- The water level in the refueling cavity is high enough to keep the radiation levels within acceptable limits when the fuel assemblies are removed from the core. Radiation monitoring is described in Section 11.5.

- Continuous communications are established and maintained between the main control room and the personnel engaged in fuel handling operations. One or more of the systems described in Subsection 9.5.2 are used for this communication.

The refueling operation is divided into four major phases: preparation, reactor disassembly, fuel handling, and reactor assembly. A general description of a typical refueling operation through these phases is provided below.

9.1.4.2.2.1 Phase I - Preparation

The reactor is shut down, borated, and cooled to refueling conditions (≤ 140°F) with a final k_{eff} less than 0.95 (all rods in). Following a radiation survey, the containment building is entered. At this time, the coolant level in the reactor vessel is lowered to a point slightly below the vessel flange. The refueling machine console is removed from storage and placed on the refueling machine and cables are connected. Then, the fuel transfer equipment and refueling machine are checked for operation (Subsection 9.1.4.4).

9.1.4.2.2.2 Phase II - Reactor Disassembly

Head cables are disconnected at the integrated head package (IHP) connector plate to allow removal of the vessel head. See Subsection 3.9.7 for a discussion of the integrated head package. The refueling cavity is prepared for flooding by checking the underwater lights, tools, and fuel transfer system; closing the refueling cavity drain lines; and removing the hatch from the fuel transfer tube. With the refueling cavity prepared for flooding, the vessel head is unseated and raised above the vessel flange using the containment polar crane. See Subsection 9.1.5 for requirements for the polar crane. Water from the in-containment refueling water storage tank (IRWST) is transferred into the refueling cavity by gravity and the spent fuel pool cooling system (See Subsection 9.1.3). The vessel head and the water level in the refueling cavity are raised, keeping the water level just below the vessel head. When the water reaches a safe shielding depth (Subsection 9.1.4.3.7), the vessel head is taken to its storage pedestal. The control rod drive shafts are disconnected. The internals lift rig is installed and the upper internals are removed from the vessel. See Subsection 9.1.5 for discussion of lifting rig requirements and design. The fuel assemblies are now free from obstructions, and the core is ready for refueling.

9.1.4.2.2.3 Phase III - Fuel Handling

The refueling sequence is started with the refueling machine.

The general fuel handling sequence is as follows:

1. The refueling machine is positioned over a fuel assembly in the core.

2. The refueling machine mast is lowered over a fuel assembly and engages it.

3. The refueling machine withdraws a spent fuel assembly from the core and raises it to a pre-determined height sufficient to clear the vessel flange and still leave sufficient water covering the fuel assembly.

4. The fuel transfer system car is moved into the refueling cavity from the fuel storage area, and the fuel basket is pivoted to the vertical position by the lifting arm.

5. The refueling machine is moved to line up the fuel assembly with the empty fuel basket.

6. The refueling machine loads the spent fuel assembly into the empty fuel basket of the transfer car.

7. The refueling machine then moves back over the core area, and it is aligned over the next fuel assembly to be removed in the core offload sequence..

8. In parallel with item 7 above, the fuel basket is pivoted to the horizontal position and the fuel transfer system container is moved through the fuel transfer tube to the fuel handling area by the transfer car and pivoted to the vertical position.

9. The spent fuel assembly is then unloaded from the fuel basket by the fuel handling machine.

10. The spent fuel assembly is placed in the spent fuel storage rack.

11. The fuel basket is pivoted to the horizontal position, moved back into the containment building and pivoted to the vertical position.

12. This procedure is repeated until the core is offloaded.

13. Core reload is essentially the reverse of the offload sequence described above.

9.1.4.2.2.4 Phase IV - Reactor Reassembly

Reactor reassembly, following refueling, is achieved by reversing the operations given in Phase II - Reactor Disassembly.

During a reassembly of the reactor, the vessel head and the water are lowered simultaneously until the vessel head engages the guide studs. At this point of the reassembly, the water is lowered to the top of the reactor vessel flange.

9.1.4.2.3 Spent Fuel Cask Loading

The spent fuel assemblies are normally stored in the spent fuel pool, until fission product activity is low enough to permit shipment. The spent fuel assemblies are then transferred to a shipping cask which is designed to shield radiation. Provisions for handling the spent fuel cask are discussed in Subsection 9.1.5.

The following procedure briefly outlines the typical steps of this operation, assuming that the cask loading pit has been previously filled with water and the gate between the cask loading pit and the spent fuel pool has been removed or opened:

1. The transfer cask containing a clean, empty spent fuel canister is brought into the cask washdown. The spent fuel canister is removed as necessary and prepared for cask loading.

2. The transfer cask/spent fuel canister are placed into the cask loading pit.

3. The fuel handling machine is positioned over the specific fuel assembly to be shipped out of the spent fuel storage rack. The fuel assembly is picked up and transported into the cask loading pit. During the transfer process the fuel assembly is always maintained with the top of the active fuel at least 8.75 feet below the water surface. This provides confidence that the direct radiation from the fuel at the surface of the water is minimal.

4. Once the fuel transfer process is complete, the lid is placed on top of the cask to provide the required shielding.

5. The cask is then moved to the washdown pit and cleaned with demineralized water. Decontamination procedures can be started at this time.

6. When the spent fuel canister closure and drying processes are complete, the transfer cask is prepared for transfer into a storage or shipping container as applicable.

During the operations, sufficient water is maintained between plant personnel and fuel assemblies that are being moved to limit dose levels to those acceptable for continuous occupational exposure.

9.1.4.2.4 Component Description

A. Fuel Transfer Tube

The fuel transfer tube penetrates the containment and spent fuel area and provides a passageway for the conveyor car during refueling. During reactor operation, the fuel transfer tube is sealed at the containment end and acts as part of the containment pressure boundary. See Subsection 3.8.2.1.5 for discussion of the fuel transfer penetration.

B. Fuel Handling Machine

The fuel handling machine performs fuel handling operations in the new and spent fuel handling area. It also provides a means of tool support and operator access for long tools used in various services and handling functions. The fuel handling machine is equipped with two 2-ton hoists, one of which is single failure proof and is designed according to NUREG-0554.

The nonsingle-failure-proof hoist is primarily used for submerged handling activities. However, there are areas in the fuel handling area of the auxiliary building that the single-failure-proof hoist is not capable of accessing due to travel limitations. Therefore, it is necessary for the nonsingle-failure-proof hoist to be used in areas other than the spent fuel pool. The nonsingle-failure-proof hoist will be restricted from handling a load above the operating floor within 15 feet of the spent fuel pool. The nonsingle-failure-proof hoist is also restricted from handling new fuel above the operating floor.

The single-failure-proof hoist will be capable of handling loads in the new fuel handling area and the spent fuel handling area with operator warnings associated with the handling of spent fuel.

C. New Fuel Assembly Handling Tool

The new fuel assembly handling tool is used to lift and transfer new fuel assemblies from the new fuel shipping containers to the new fuel storage rack. The tool is also used to transfer new fuel assemblies from the new fuel storage rack to the new fuel elevator.

D. Spent Fuel Assembly Handling Tool

The spent fuel assembly handling tool is used to lift and transfer spent fuel assemblies from the fuel transfer system to the spent fuel racks and new fuel from the elevator to the spent fuel racks.

E. New Fuel Elevator Hoist

The new fuel elevator lowers new fuel assemblies from the fuel handling area operating floor into the spent fuel pool where they can be picked up by the fuel handling machine.

F. New Rod Cluster Control Handling Tool

The new rod cluster control handling tool is used to lift and transfer new control rods from their shipping containers to the new fuel assemblies, and between new assemblies in the new fuel storage racks.

G. Refueling Machine

The refueling machine performs fuel handling operations in the containment building. It also provides a means of tool support and operator access for long tools used for service, control rod latching and unlatching, and for various handling functions.

H. Burnable Poison Rod Assembly Handling Tool

The burnable poison rod assembly handling tool is used to lift and transfer burnable poison rod assemblies between assemblies and/or storage fixtures.

I. Burnable Poison Rod Assembly Rack Insert

The burnable poison rod assembly rack insert is used to store burnable poison rod assemblies or control rods in the spent fuel storage racks.

J. Fuel Transfer System

The fuel transfer system conveys fuel assemblies between the containment building and the auxiliary building fuel handling area.

K. Not used.

L. Control Rod Drive Shaft Unlatching Tool

The control rod drive shaft unlatching tool is used to latch and unlatch the control rod drive shafts from the rod cluster control assemblies. It is operated from the refueling machine walkway.

M. Control Rod Drive Shaft Handling Tool

The control rod drive shaft handling tool is used to latch and unlatch the control rod drive shafts (CRDS) from the rod cluster control assemblies.

N. Irradiation Sample Handling Tool

The irradiation sample handling tool is used to remove irradiated reactor vessel surveillance capsules in the holders located in the reactor internals. It is also used for removing and installing the irradiation sample access plugs in the reactor internals.

O. Irradiation Tube End Plug Seating Jack

The irradiation tube end plug seating jack is used to push the irradiation samples into the specimen guides for the last few inches.

P. Control Rod Drive Shaft Storage Racks

The control rod drive shaft storage racks are located on the refueling cavity wall and are used to store spare control rod drive shafts and any ones that might be removed from the upper internals during refueling.

9.1.4.3 Safety Evaluation

9.1.4.3.1 Refueling Machine

The refueling machine design includes the following provisions to provide for safe handling of fuel assemblies. These safety features include the safety requirements listed in (ANS) 57.1:

A. Safety Interlocks

Operations which could endanger the operator or damage the fuel, designated below by an asterisk (*), are prevented by mechanical or failure tolerant electrical interlocks or by redundant electrical interlocks. Other interlocks are intended to provide equipment protection and may be implemented either mechanically or by electrical interlock and are not required to be fail safe.

Fail safe electrical design of a control system interlock is applied according to the following rules:

1. Fail safe operation of an electrically operated brake is such that the brake engages on loss of power.

2. Fail safe operation of a relay is such that the de-energized state of the relay inhibits unsafe operation.

3. Fail safe operation of a switch, termination, or wire is such that breakage or high resistance of the circuit inhibits unsafe operation. The dominant failure mode of the mechanical operation of a cam-operated limit switch is sticking of the plunger in its depressed position. Therefore, use of the plunger-extended position (on the lower part of the operating cam) to energize a relay is consistent with fail safe operation.

Those parts of a control system interlock which are not or cannot be operated in a fail safe mode as defined in the preceding rules are supplemented by a redundant component or components to provide the requisite protection. Required fail safe operations are:

*1. The refueling machine can only place a fuel assembly in the core, in the in-containment fuel storage rack, or in the fuel transfer system.

*2. When the refueling machine gripper is engaged, the machine cannot traverse unless the fuel assembly bottom nozzle is clear of the lower core plate alignment pins.

*3. When the refueling machine gripper is disengaged, the machine cannot traverse unless the gripper is withdrawn into the mast.

*4. Simultaneous traversing and hoisting operations are prevented.

*5. The refueling machine hoist up travel stops at a predetermined height to prevent a spent fuel assembly from being raised above the minimum water depth for shielding.

*6. When a fuel assembly is raised or lowered, interlocks provide confidence that the refueling machine can only apply loads which are within safe operating limits.

*7. The fuel gripper is monitored by devices to confirm operation to the fully engaged or fully disengaged position. Alarms are actuated if both engage and disengage switches are actuated at the same time or if neither is actuated.

8. Lowering of the gripper is not permitted if slack cable exists in the hoist.

9. The gripper tube is prevented from lowering completely out of the mast.

10. Before the fuel gripper can release a fuel assembly, the fuel gripper must be in its down position in the core, in the in-containment fuel storage rack, or in the fuel transfer system.

*11. The weight of the fuel assembly must be off the gripper before the fuel gripper can release a fuel assembly.

12. The refueling machine hoist is prevented from moving in the transfer machine zone unless the upender is vertical. An interlock is provided from the fuel transfer system to the refueling machine to accomplish this.

B. Bridge and Trolley Hold-Down Devices

Both refueling machine bridge and trolley are horizontally restrained on the rails by guide rollers on either side of the rail. Hold down devices are used to prevent the bridge or trolley from leaving the rails in the event of a seismic event.

C. Main Hoist Braking System

The main hoist is equipped with two independent braking systems. The winch has a mechanically-operated load brake to prevent overhauling, and a solenoid activated motor brake. Both brakes are rated at 125 percent of the hoist design load.

D. Fuel Assembly Support System.

The main hoist system is supplied with redundant paths of load support such that failure of any one component will not result in free fall of the fuel assembly. Two wire ropes are anchored to the winch drum and carried to a load equalizing mechanism on the top of the gripper tube.

The fuel assembly gripper has four fingers gripping the fuel, any two of which will support the fuel assembly weight.

During each refueling outage and prior to removing fuel, the gripper and hoist system are routinely load tested to 125 percent of the maximum setting on the hoist load limit switch.

9.1.4.3.2 Fuel Transfer System

The following personnel safety features are provided for in the fuel transfer system. These safety features include the safety requirements listed in (ANS) 57.1:

A. Transfer Car Permissive Switch

The transfer car controls are located in the fuel handling area, and conditions in the containment are therefore not visible to the operator. The transfer car permissive switch allows the fuel transfer system containment operator to exercise some control over car movement if conditions visible to him warrant such control.

B. Lifting Arm - Transfer Car Position

An interlock on the fuel transfer system prevents the upender from being moved from the horizontal to the vertical position if the transfer car has not reached the end of its travel.

C. Transfer Car - Valve Open

An interlock on the transfer tube valve permits transfer car operation only when the transfer tube valve position switch indicates the valve is fully open.

D. Fuel Container - Refueling Machine

The fuel transfer system is interlocked with the refueling machine. Whenever the transfer car is located in the refueling cavity, the fuel transfer system cannot be operated unless the refueling machine mast is in the fully retracted position or the refueling machine is over the core.

E. Lifting Arm - Fuel Handling Machine

On the spent fuel pool side, the fuel transfer system is interlocked with the fuel handling machine. The fuel transfer system cannot be operated until the loaded fuel handling machine hoist is at the up limit, the empty tool is clear of the upender, or the fuel handling machine is moved away from the fuel transfer system area. An interlock is provided from the fuel handling machine to the fuel transfer system to accomplish this.

9.1.4.3.3 Fuel Handling Machine

The fuel handling machine design includes the following provisions to provide for safe handling of fuel assemblies and other components within the auxiliary building fuel handling area. These safety features include, but are not limited to the safety requirements listed in (ANS) 57.1 with the exception of grapple release, as this feature is the manual operation of a fuel handling tool:

A. Safety Interlocks

Operations that could endanger the operator or damage the fuel, designated below by an asterisk (*), are prevented by mechanical or failure tolerant electrical interlocks, or by redundant electrical interlocks. Other interlocks are intended to provide equipment protection and may be implemented either mechanically or by electrical interlock and are not required to be fail safe.

Fail safe electrical design of a control system interlock is applied according to the following rules:

1. Fail safe operation of an electrically operated brake is such that the brake engages on loss of power.

2. Fail safe operation of a relay is such that the de-energized state of the relay inhibits unsafe operation.

3. Fail safe operation of a switch, termination, or wire is such that breakage or high resistance of the circuit inhibits unsafe operation.

Those parts of a control system interlock that are not or cannot be operated in a fail safe mode, as defined in the preceding rules, are supplemented by a redundant component or components to provide the requisite protection. Required fail safe operations are as follows:

*1. The fuel handling machine, and its associated fuel handling tool, can only place a fuel assembly in the new fuel rack, spent fuel racks, fuel transfer system, new fuel elevator, spent fuel cask, fuel inspection/repair station, or rail car bay traveler.

*2. When the hoist load weighing system detects a load greater than the spent fuel assembly handling tool, the machine cannot traverse unless the hoist is at the up limit. For new fuel handling, the load is greater than a new fuel handling tool.

*3. Simultaneous traversing and hoisting operations are prevented.

*4. The fuel handling machine hoist up travel stops at a predetermined height to prevent a spent fuel assembly from being raised above the minimum water depth for shielding. This hoist “up” travel stop predetermined height is met by the mechanical “up” limit of the non-single failure-proof hoist combined with the geometry of the spent fuel assembly handling tool (SFAHT). Together these design features assure the bottom nozzle of the spent fuel assembly remains less than 3 feet above the top of the spent fuel storage rack.

*5. When a fuel assembly is raised or lowered, interlocks provide confidence that the fuel handling machine can apply only loads that are within safe operating limits.

*6. Lowering of the hoist is not permitted if slack cable exists.

*7. The fuel handling machine hoist is prevented from moving in the transfer machine zone unless the fuel transfer machine upender is vertical. An interlock is provided from the fuel transfer system to the fuel handling machine to accomplish this.

*8. The fuel handling machine is prevented from transporting new fuel above the operating floor over the spent fuel racks.

B. Bridge Hold-Down Devices

The fuel handling machine bridge is horizontally restrained on the rails by guide rollers on either side of the rail. Hold-down devices are used to prevent the bridge from leaving the rails in a seismic event.

C. Hoist Braking System

The hoists are equipped with a solenoid-activated motor brake. The brake is rated at 125 percent of the hoist design load.

D. Fuel Assembly Support System

The hoists are supplied with redundant paths of load support so that failure of any one component will not result in a free fall of the fuel assembly. When redundant paths are not practical, conservative safety factors shall be applied.

9.1.4.3.4 Fuel Handling Tools and Equipment

Fuel handling tools and equipment handled over an open reactor vessel or spent fuel handling area are designed to prevent inadvertent decoupling from machine hooks; i.e., lifting rigs are pinned to the machine hook, and safety latches are provided on hook supporting tools.

Tools required for handling internal reactor components are designed with fail safe features that prevent disengagement of the component in the event of operating mechanism malfunction.

These safety features apply to the following tools:

A. Control Rod Drive Shaft Unlatching Tool

The air cylinders actuating the gripper mechanism are equipped with backup springs which close the gripper in the event of loss of air to the cylinder. Air-operated valves are equipped with safety locking rings to prevent inadvertent actuation.

B. New Fuel Assembly Handling Tool

When the fingers are latched, the actuating handle is positively locked, preventing inadvertent actuations. The tool is preoperationally tested at 125 percent of the weight of one fuel assembly and the heaviest core component.

C. Spent Fuel Assembly Handling Tool

When the fingers are latched, the actuating handle is positively locked to prevent inadvertent actuations. The tool is preoperationally tested at 125 percent of the weight of one fuel assembly and the heaviest core component.

9.1.4.3.5 Seismic Considerations

The equipment classifications for fuel handling and storage equipment are listed in Section 3.2, which provides criteria for the seismic design of the various components.

For safety and non-safety equipment, design for the safe shutdown earthquake (SSE) is considered if failure might adversely affect safety-related equipment.

9.1.4.3.6 Containment Pressure Boundary Integrity

The fuel transfer tube which connects the refueling cavity (inside the containment) and the fuel storage area (outside the containment) is closed on the refueling cavity side by a hatch except during refueling operations. Two seals are located around the periphery of the hatch with leak-check provisions between them.

9.1.4.3.7 Radiation Shielding

During spent fuel transfer, the exposure rate to the operator is 2.5 millirem per hour or less. This is accomplished by maintaining a minimum of 8.75 feet of water above the top of the active fuel height during handling operations.

The fuel handling devices used to lift spent fuel assemblies are the refueling machine and the fuel handling machine. The fuel handling machine hoists require the use of the spent fuel handling tool to lift spent fuel. Both the refueling machine and fuel handling machine contain positive stops which prevent the fuel assembly from being raised above a safe shielding height.

9.1.4.3.8 Radiation Monitoring

Plant procedures require that an operating radiation monitor is mounted on any machine when it is handling fuel. Refer to Subsection 11.5.6.4 for a discussion of augmented radiation monitoring during fuel handling operations.

9.1.4.4 Inspection and Testing Requirements

The test and inspection requirements for the equipment in the light load handling system are as follows:

A. Fuel Handling Machine, Refueling Machine, and New Fuel Elevator

The minimum acceptable tests include the following:

- Hoist and cable are load tested at 125 percent of the rated load.
- The equipment is assembled and checked for function and operation.

The following maintenance and checkout tests are recommended to be performed prior to refueling:

- Visual inspection for loose or foreign parts; maintenance to keep free of dirt and grease.
- Lubrication of exposed gears with proper lubricant.
- Visual inspection of hoist cables for worn or broken strands.
- Visual inspection of limit switches and limit switch actuators for any sign of damaged or broken parts.
- Inspection of the equipment for function and operation.

B. Fuel Assembly Handling Tools

The minimum acceptable tests are as follows:

- The tool shall be load tested to 125 percent of the rated load.
- The tool is assembled and checked for operation.

The following maintenance and checkout tests are recommended to be performed prior to use of the tools:

- Visual inspection of the tool for dirt and loose hardware and for any signs of damage such as nicks and burrs.
- Check of the tool for operation.

C. Fuel Transfer System

The minimum acceptable test is that the system is assembled and checked for function and operation.

The following maintenance and checkout tests are recommended to be performed prior to refueling:

- Visual inspection for loose or foreign parts; maintenance to keep free of dirt and grease.
- Lubrication of exposed gears.
- Visual inspection of limit switches and limit switch actuators for any sign of damaged or broken parts.
- Check of system for function and operation.

The above requirements are part of the plant inspection program for the light load handling system, which is implemented through procedures. In addition to the above inspections, the procedures reflect the manufacturers' recommendations for inspection.

The light load handling program, including system inspections, is implemented prior to receipt of fuel onsite.

9.1.5 Overhead Heavy Load Handling Systems

Heavy load handling systems consist of equipment which lift loads whose weight is greater than the combined weight of a single spent fuel assembly and its handling device. This equipment is part of the mechanical handling system (MHS) and is located throughout the plant. The principal equipment is the containment polar crane and the cask handling crane. Other such equipment includes the reactor coolant pump handling machine, bridge cranes, miscellaneous monorail hoists and fixed hoists. Table 9.1-5 lists the heavy load handling systems located in the safety-related areas of the plant, specifically the nuclear island.

For AP1000, a heavy load is a load whose weight is greater than the combined weight of a fuel assembly with rod cluster control, and the associated handling device. This combined weight is about 3100 pounds. Thus, a heavy load is defined as a load weighing more than 3100 pounds.

The COL Combined License applicants referencing the AP1000 certified design will also provide a heavy load handling program description. Implementation of this program will include safe load paths for movement of heavy loads, to be referenced in procedures and shown on equipment layout drawings. This will minimize the potential to impact irradiated fuel in the reactor vessel and in the spent fuel pool, and safe shutdown equipment from movement of heavy loads.

The heavy loads handling program is based on NUREG 0612 and vendor recommendations. The key elements of the program are:

- Listing of heavy loads to be lifted during operation of the plant. This list will be provided once magnitudes have been accurately formalized but no later than three (3) months prior to fuel receipt.
- Listing of heavy load handling equipment as outlined in Table 9.1-5 and whose characteristics are described in this section.
- Heavy load handling safe load paths and routing plans including descriptions of interlocks, (automatic and manual) safety devices and procedures to assure safe load path compliance. Anticipated heavy load movements are analyzed and safe load paths defined. Safe load path considerations are based on comparison with analyzed cases, previously defined safe movement areas, and previously defined restricted areas. The analyses are in accordance with Appendix A of NUREG 0612.
- Heavy load handling equipment maintenance manuals and procedures as described in Subsection 9.1.5.5.
- Heavy load handling equipment inspection and test plans, as outlined in Subsections 9.1.5.4 and 9.1.5.5.
- Heavy load handling personnel qualifications, training, and control procedures as described in Subsection 9.1.5.5.
- QA programs to monitor, implement, and ensure compliance with the heavy load-handling procedures as described in Subsection 9.1.5.5.

A quality assurance program, consistent with Paragraph 10 of NUREG-0554, is established and implemented for the procurement, design, fabrication, installation, inspection, testing, and operation of the crane. The program, as a minimum, includes the following elements:

- design and procurement document control
- instructions, procedures, and drawings
- control of purchased material, equipment, and services
- inspection
- testing and test control
- non-conforming items
- corrective action
- records

9.1.5.1 Design Basis

9.1.5.1.1 Safety Design Basis

Section 3.2 identifies safety and seismic classifications for mechanical handling system equipment. Heavy load handling systems are generally classified as nonsafety-related, nonseismic systems. The components of single-failure-proof systems necessary to prevent uncontrolled lowering of a critical load are classified as safety-related.

The polar crane, cask handling crane, containment equipment hatch hoist, and containment maintenance hatch hoist are single-failure-proof systems and are classified as seismic Category I. They are designed to support a critical load during and after a safe shutdown earthquake. The equipment and maintenance hatch hoist systems are required to be operational after a safe shutdown earthquake.

A critical load is a heavy load that, if dropped, could cause unacceptable damage to reactor fuel elements, or loss of safe shutdown or decay heat removal capability. The consequences of a postulated load drop are considered to be acceptable when the four evaluation criteria of NUREG-0612 (Reference 8), Paragraph 5.1, are satisfied.

Heavy loads handled in safety-related areas of the plant are classified as critical loads unless the consequences of a load drop have been evaluated and found to be within acceptable limits. (See Subsection 9.1.5.3.)

Plant arrangement and the design of heavy load handling systems are based on the following criteria:

- To the extent practicable, heavy loads are not carried over or near safety-related components, including irradiated fuel and safe shutdown components. Safe load paths are designated for heavy load handling in safety-related areas.
- The likelihood of a load drop is extremely small (that is, the handling system is single failure proof), or the consequences of a postulated load drop are within acceptable limits.

- Single-failure-proof systems can stop and hold a critical load following the credible failure of a single component.
- Single-failure-proof systems can support a critical load during and after a safe shutdown earthquake.

9.1.5.1.2 Codes and Standards

The mechanical handling system conforms to the applicable codes and standards listed in Section 3.2. The polar crane and cask handling cranes are designed according to NUREG-0554 (Reference 11) supplemented by ASME NOG-1 (Reference 12) for a Type I single failure proof crane. Other overhead cranes and hoists handling heavy loads are designed according to ASME NOG-1 and to the applicable ANSI standard.

NUREG-0612 references ANSI B30.2 (Reference 9) and CMAA-70 (Reference 7) for the design of cranes in safety-related areas, and references NUREG-0554 (Reference 11) for the design of single-failure-proof cranes. ASME NOG-1 also provides design guidance consistent with that provided by NUREG-0554 for the design of single-failure-proof cranes. The design of AP1000 cranes complies with the requirements of NUREG-0612.

9.1.5.2 System Description

Table 9.1-5 lists the heavy load handling systems located in the safety-related areas of the plant, specifically the nuclear island. The polar crane and cask handling crane are designed according to the requirements of NUREG-0554 supplemented by ASME NOG-1 for a Type I, single-failure-proof crane. A description of these cranes is provided in this subsection. The containment equipment hatch hoist and maintenance hatch hoist are designed according to the requirements of NUREG-0554 supplemented by ASME NOG-1 for a Type I, single-failure-proof hoist. Based on the conservative design of these heavy load handling systems and associated special lifting devices, slings, and load lift points (see Subsection 9.1.5.3), a load drop of the critical loads handled by the polar crane, cask handling crane, containment equipment hatch hoist, and maintenance hatch hoist is unlikely. Except for the containment polar crane, cask handling crane, containment equipment hatch hoist, and containment maintenance hatch hoist, the heavy load handling systems are not single-failure-proof.

9.1.5.2.1 Polar Crane General Description

The containment polar crane is a bridge crane mounted on a circular runway rail supported by the containment structure. The bridge consists of two welded steel box girders held together with structural end beams. The two end beams are supported by wheeled trucks that travel on top of the runway rail.

The trolley is mounted on wheeled trucks which move by tractive power over rails secured to the crane girders. The trolley provides structural support for the crane hoisting machinery. Devices are installed to preclude derailment of the bridge or trolley under seismic loading.

Two electric-powered hoists are provided, a main hoist and an auxiliary hoist. Each hoist raises and lowers loads by reeving wire rope through upper and lower sheaves. The lower sheaves are an integral part of the load block. A hook is attached to each load block.

9.1.5.2.1.1 System Operation

The polar crane lifts a variety of loads for refueling and maintenance, such as the reactor vessel integrated head package, reactor internals, and the reactor coolant pump components. The crane is designed to withstand the containment environmental conditions during all modes of plant operation,

including pressurization and depressurization of the containment. The crane is designed to operate only during shutdown periods.

Movements of the bridge, trolley, main, and auxiliary hoists can be controlled from the operator's cab or from a remote control. Both the cab and remote controls include a main power control switch. The remote control is equipped with a keylock switch that inhibits control from the cab. Motion control push buttons in the cab and on the remote return to the OFF position when released.

Bridge, trolley, and hoist speeds, and speed controls are in accordance with ASME NOG-1. All speeds are variable. Speed controls permit precise positioning of the load.

The crane can be used for steam generator replacement. The structural design of the bridge is sufficient to support the steam generator, which is a noncritical load. A special hoist on a temporary trolley may be used for the steam generator replacement. Steam generator replacement is not intended to be accomplished with single-failure-proof equipment.

9.1.5.2.1.2 Component Descriptions

The polar crane is designed according to NUREG-0554 supplemented by ASME NOG-1. Table 9.1.5-3 lists the design characteristics of this crane. This subsection describes how the code requirements are implemented in the design of key safety-related components. Associated lifting devices and load lift points are also described.

Main Hoist Systems

The hoisting rope is wound around the drum in a single layer. If the rope becomes dislodged from its proper groove, the crane drives are automatically shut down and the brakes are set. Features are also provided to contain the drum and prevent disengagement of the gearing in the event of drum shaft or bearing failure. A control brake and two redundant holding brakes are provided.

Two separate, redundant reeving systems are used, so that a single rope failure will not result in the dropping of the load. Two wire ropes are reeved side-by-side through the upper and lower sheaves. Each cable passes through an equalizer that adjusts for unequal cable length. The equalizer is also a load transfer safety system, eliminating sudden load displacement and shock to the crane in the unlikely event of a cable break. In the event of hook overtravel to the point where the load block contacts the crane structure, the ropes cannot be cut or crushed.

The load block provides two separate load attachment points; the main hook is a two-pronged, sister hook with safety latches.

Auxiliary Hoist System

The auxiliary hoist system is similar to that of the main hoist.

Special Lifting Devices

Special lifting devices for critical and non-critical loads are designed to meet the applicable requirements of ANSI N14.6 (Reference 14). The stress design safety factors are based on the combined maximum static and dynamic loads that could be imparted to the handling device, based on the characteristics of the crane. Special lifting devices used for the handling of critical loads are listed in Table 9.1.5-2.

Lifting Devices Not Specially Designed

Slings or other lifting devices not specially designed are selected in accordance with ANSI B30.9 (Reference 15), except that the load rating is based on the combined maximum static and dynamic loads that could be imparted to the sling.

For the handling of critical loads, dual or redundant slings are used, or a sling having a load rating twice that required for a non-critical load is used and shall be constructed of metallic material (chain or wire rope) per NRC Regulatory Issue Summary 2005-25, Supplement 1 (Reference 23).

Load Lift Points

The design stress safety factors for heavy load lift points, such as lifting lugs or cask trunnions, are consistent with the safety factors used for special lifting devices. The design of lift points for critical loads is in accordance with NUREG-0612, Paragraph 5.1.6.(3).

9.1.5.2.1.3 Instrumentation Applications

Limit switches are used to initiate protective responses to:

- Hoist overtravel
- Hoist overspeed
- Hoist overload or unbalanced load
- Improper winding of hoist rope on the drum
- Bridge or trolley overtravel

Redundant limit switches are used with the main hoist and the auxiliary hoists to limit the extent of travel in both the hoisting and lowering directions. The primary protection for each hoist in each direction is a limit switch which interrupts power to the hoist motor via the control circuitry. Interruption of power to the hoist motor causes the hoist brakes to set. The hoist may be operated in the safe direction to back out of the overtravel condition.

The secondary protection for each hoist in the raising direction is a block-actuated limit switch which directly interrupts power to the hoist motor and causes the brake(s) to set. The secondary protection for each hoist in the lowering direction is a limit switch which is mechanically and electrically independent of the primary switch but also interrupts power to the hoist motor via the control circuitry. Actuation of the secondary limit switches prevents further hoisting or lowering until specific corrective action is taken.

A centrifugal-type limit switch, located on the drum shaft, provides overspeed protection for each hoist. Hoist speeds in excess of 115 percent of the rated lowering speed for a critical load cause the hoist motor to stop and the holding brakes to set.

A load-sensing system is used to detect overloading of the hoists. Hoisting motion is stopped when the overload setpoint is exceeded. Similarly, an unbalanced load is detected by a system that stops the hoist motion when there is excessive movement of the equalizer mechanism.

A level wind limit switch is provided to detect improper threading of the hoist rope in the drum grooves. This switch stops crane drive motors and sets the brakes. Further hoisting or lowering is prevented until specific corrective action is taken.

End-of-travel limit switches are provided for the trolley. These switches are set to trip just before the trolley comes into contact with the bumper, thus providing confidence that the kinetic energy of the trolley is within the energy-absorbing capacity of the bumpers.

9.1.5.2.2 Cask Handling Crane General Description

The cask handling crane is a bridge crane mounted on two runway rails supported by the auxiliary building fuel handling area east and west wall structures. The bridge consists of two welded steel box girders held together with structural end beams. The two end beams are supported by wheeled trucks that travel on top of the runway rail.

The trolley is mounted on wheeled trucks which move by tractive power over rails secured to the crane girders. The trolley provides structural support for the crane hoisting machinery. Devices are installed to preclude derailment of the bridge or trolley under seismic loading.

The hoist is electrically powered and raises and lowers loads by reeving wire rope through sheaves that are an integral part of the load block. A hook is attached to the load block.

9.1.5.2.2.1 System Operation

The cask handling crane lifts the spent fuel shipping cask from the cask transporter in the loading bay, into the fuel handling area of the auxiliary building, places the cask in the cask washdown and cask loading pits, is used to remove and replace the cask lid, and lowers the loaded cask onto the cask transporter. The crane is designed to operate in the fuel handling area environmental conditions, and is typically used only when fuel movement activities associated with refueling the reactor are not in progress.

Movements of the bridge, trolley, main, and auxiliary hoists can be controlled from a radio remote control or from a pendant suspended from the crane. Both the pendant and radio remote controls include a main power control switch. The pendant is equipped with a keylock switch that inhibits control from the radio remote control. Motion control push buttons on the radio remote control and on the pendant return to the OFF position when released.

Bridge, trolley, and hoist speeds, and speed control are in accordance with ASME NOG-1. All speeds are variable. Speed controls permit precise positioning of the load.

9.1.5.2.2.2 Component Descriptions

The cask handling crane is designed according to NUREG-0554 supplemented by ASME NOG-1. Table 9.1.5-1 lists the design characteristics of this crane. This subsection describes how the code requirements are implemented in the design of key safety-related components. Associated lifting devices and load lift points are also described.

Hoist System

The hoisting rope is wound around the drum in a single layer. If the rope becomes dislodged from its proper groove, the crane drives are automatically shut down and the brakes are set. Features are also provided to contain the drum and prevent disengagement of the gearing in the event of drum shaft or bearing failure. A control brake and two redundant holding brakes are provided.

Two separate, redundant reeving systems are used, so that a single rope failure will not result in the dropping of the load. Two wire ropes are reeved side-by-side through the sheave. Each cable passes through an equalizer that adjusts for unequal cable length. The equalizer is also a load transfer safety system, eliminating sudden load displacement and shock to the crane in the unlikely event of a cable break. Overtravel protection is provided (see Subsection 9.1.5.2.2.3); however, even in the event of hook overtravel in the raising direction to the point the load block contacts the crane structure, the ropes cannot be cut or crushed.

The load block provides two separate load attachment points; the main hook is a two-pronged sister hook with safety latches.

Auxiliary Hoist System

The auxiliary hoist system is similar to that of the main hoist.

Special Lifting Devices

Special lifting devices for critical and non-critical loads are designed to meet the applicable requirements of ANSI N14.6 (Reference 14). The stress design safety factors are based on the combined maximum static and dynamic loads that could be imparted to the handling device, based on the characteristics of the crane. Special lifting devices used for the handling of critical loads are listed in Table 9.1.5-2.

Lifting Devices Not Specially Designed

Slings or other lifting devices not specially designed are selected in accordance with ANSI B30.9 (Reference 15), except that the load rating is based on the combined maximum static and dynamic loads that could be imparted to the sling.

For the handling of critical loads, dual or redundant slings are used, or a sling having a load rating twice that required for a non-critical load is used and shall be constructed of metallic material (chain or wire rope) per NRC Regulatory Issue Summary 2005-25, Supplement 1 (Reference 23).

Load Lift Points

The design stress safety factors for heavy load lift points, such as lifting lugs or cask trunnions, are consistent with the safety factors used for special lifting devices. The design of lift points for critical loads is in accordance with NUREG-0612, Paragraph 5.1.6.(3).

9.1.5.2.2.3 Instrumentation Applications

Limit switches are used to initiate protective responses to:

- Hoist overtravel.
- Hoist overspeed.
- Hoist overload or unbalance load.
- Improper winding of hoist rope on the drum.
- Bridge or trolley overspeed.
- Bridge or trolley overtravel.

Redundant limit switches are used with the main hoist and the auxiliary hoists to limit the extent of travel in both the hoisting and lowering directions. The primary protection for each hoist in each direction is a limit switch which interrupts power to the hoist motor via the control circuitry. Interruption of power to the hoist motor causes the hoist brakes to set. The hoist may be operated in the safe direction to back out of the overtravel condition.

The secondary protection for each hoist in the raising direction is a block-actuated limit switch, which is mechanically and electrically independent of the primary limit switch and interrupts power to the hoist motor and causes the brake(s) to set. The secondary protection for each hoist in the lowering direction is a limit switch, which is mechanically and electrically independent of the primary switch, but also interrupts power to the hoist motor via the control circuitry. Actuation of the secondary limit switches prevents further hoisting or lowering until specific corrective action is taken.

A centrifugal-type limit switch, located on the drum shaft, provides overspeed protection for each hoist. Hoist speeds in excess of 115 percent of the rated lowering speed for a critical load causes the hoist motor to stop and the holding brakes to set.

A load-sensing system is used to detect overloading of the hoists. Hoisting motion is stopped when the overload setpoint is exceeded. Similarly, an unbalanced load is detected by a system that stops the hoist motion when there is excessive movement of the equalizer mechanism.

A level wind limit switch is provided to detect improper threading of the hoist rope in the drum grooves. This switch stops crane drive motors and sets the brakes. Further hoisting or lowering is prevented until specific corrective action is taken.

End-of-travel limit switches are provided for the trolley. These switches are set to trip just before the trolley comes into contact with the bumper. This provides confidence that the kinetic energy of the trolley is within the energy-absorbing capacity of the bumpers.

9.1.5.2.3 Equipment Hatch Hoist General Description

The equipment hatch hoist is a hoist that is foot-mounted on a platform supported by the containment structure.

The hoist is electrically powered, and it raises and lowers loads by reeving wire rope through sheaves that are an integral part of the load block. The load block is equipped with a hook or lifting device.

9.1.5.2.3.1 System Operation

The equipment hatch hoist lifts the equipment hatch. The hoist is designed to withstand the containment environmental conditions during all modes of plant operation, including pressurization and depressurization of the containment. The hoist is designed to operate only during shutdown periods.

Movements of the hoist can be controlled from a wall-mounted pushbutton control station. The pushbutton control station includes a main power control switch. Motion control push buttons on the control station return to the OFF position when released.

Hoist speed is in accordance with ASME NOG-1.

9.1.5.2.3.2 Component Descriptions

The equipment hatch hoist is designed according to NUREG-0554 supplemented by ASME NOG-1. Table 9.1.5-4 lists the design characteristics of this hoist. This subsection describes how the code requirements are implemented in the design of key safety-related components.

Hoist System

The hoisting rope is wound around the drum in a single layer. If the rope becomes dislodged from its proper groove, the hoist drive is automatically shut down and the holding brakes are set. Features are also provided to contain the drum and prevent disengagement of the gearing in the event of drum shaft or bearing failure. Hoist motor regenerative braking, two holding brakes, and a third brake on the wire rope drum are provided.

Two separate, redundant reeving systems are used so that a single rope failure will not result in the dropping of the load. Two wire ropes are reeved side-by-side through the sheave blocks. Each rope connects to an equalizer that adjusts for unequal rope length. The equalizer is also a load transfer

safety system, eliminating sudden load displacement and shock to the hoist in the unlikely event of a rope break. Overtravel protection is provided (see Subsection 9.1.5.2.3.3); however, even in the event of overtravel in the raising direction to the point the load block contacts the hoist structure, the ropes cannot be cut or crushed.

The load block provides a load attachment point that has double the normal design factor in lieu of redundancy.

Special Lifting Devices

Special lifting devices shall not be used with the equipment hatch hoist.

Lifting Devices Not Specially Designed

Slings or other lifting devices not specially designed are selected in accordance with ANSI B30.9 (Reference 15), except that the load rating is based on the combined maximum static and dynamic loads that could be imparted to the sling.

For the handling of critical loads, dual or redundant slings are used, or a sling having a load rating twice that required for a non-critical load is used and should be constructed of metallic material (chain or wire rope) per NRC Regulatory Issue Summary 2005-25, Supplement 1 (Reference 23)

Load Lift Points

The design stress safety factors for heavy load lift points, such as lifting lugs, are consistent with the safety factors used for special lifting devices. The design of lift points for critical loads is in accordance with NUREG-0612, Paragraph 5.1.6.(3).

9.1.5.2.3.3 Instrumentation Applications

Limit switches are used to initiate protective responses to:

- Hoist overtravel.
- Hoist overspeed.
- Hoist overload or unbalanced load.
- Improper winding of hoist rope on the drum.

Redundant limit switches are used with the hoist to limit the extent of travel in both the hoisting and lowering directions. The primary protection for the hoist in each direction is a limit switch, which interrupts power to the hoist motor via the control circuitry. Interruption of power to the hoist motor causes the hoist brakes to set. The hoist may be operated in the safe direction to back out of the overtravel condition.

The secondary protection for the hoist in the raising direction is a block-actuated limit switch, which is mechanically and electrically independent of the primary limit switch and interrupts power to the hoist motor and causes the brake(s) to set. The secondary protection for the hoist in the lowering direction is a limit switch, which is mechanically and electrically independent of the primary switch, but also interrupts power to the hoist motor via the control circuitry. Actuation of the secondary limit switches prevents further hoisting or lowering until specific corrective action is taken.

A centrifugal-type limit switch, located on the drum shaft, provides overspeed protection for the hoist. Hoist speeds in excess of 125 percent of the rated lowering speed for a critical load causes the hoist motor to stop and the holding brakes to set.

A load-sensing system is used to detect overloading of the hoists. Hoisting motion is stopped when the overload setpoint is exceeded. Similarly, an unbalanced load is detected by a system that stops the hoist motion when there is excessive movement of the equalizer mechanism.

A level wind limit switch is provided to detect improper threading of the hoist rope in the drum grooves. This switch stops crane drive motors and sets the brakes. Further hoisting or lowering is prevented until specific corrective action is taken.

9.1.5.2.4 Maintenance Hatch Hoist General Description

The maintenance hatch hoist system is the same as that of the equipment hatch hoist system.

9.1.5.3 Safety Evaluation

The design and arrangement of heavy load handling systems promotes the safe handling of heavy loads by one of the following means:

- A single-failure-proof system is provided so that a load drop is unlikely.
- The arrangement of the system in relationship to safety-related plant components is such that the consequences of a load drop are acceptable per NUREG 0612. Postulated load drops are evaluated in the heavy loads analysis.

The polar crane, the cask handling crane, the containment equipment hatch, and the maintenance hatch hoists are single failure proof. These systems stop and hold a critical load following the credible failure of a single component. A double design factor is provided for hooks where used as load bearing components. Redundancy is provided for load bearing components other than hooks, such as the hoisting ropes, sheaves, equalizer assembly, and holding brakes. These systems are designed to support a critical load during and after a safe shutdown earthquake. The seismic Category I equipment and maintenance hatch hoist systems are designed to remain operational following a safe shutdown earthquake. The polar crane is designed to withstand rapid pressurization of the containment during a design basis loss of coolant accident or main steam line break, without collapsing.

The cask loading pit is separated from the spent fuel pool. The cask handling crane cannot move over the spent fuel pool because the crane rails do not extend over the pool. Mechanical stops prevent the cask handling crane from going beyond the ends of the rails.

A heavy loads analysis is performed to evaluate postulated load drops from heavy load handling systems located in safety-related areas of the plant, specifically the nuclear island. No evaluations are required for critical loads handled by the containment polar crane, the cask handling crane, the containment equipment hatch hoist, and the containment maintenance hatch hoist since a load drop is unlikely.

The heavy loads analysis is to confirm that a postulated load drop does not cause unacceptable damage to reactor fuel elements, or loss of safe shutdown or decay heat removal capability.

For the MSIV monorail hoists, equipment and components required for decay heat removal during MODES 5 or 6 are not located in the load path.

There are no planned heavy load lifts outside those already described. However, over the plant life there may be occasions when heavy loads not presently addressed need to be lifted (i.e., in support of special maintenance/repairs). For these occasions, special procedures are generated that address, as a minimum, the following:

- The special procedure complies with NUREG-0612.
- A safe load path is determined. Mechanical and/or electrical stops are incorporated in the hardware design to prohibit travel outside the safe load path. Maximum lift heights are specified to minimize the impact of an unlikely load drop.
- Where a load drop could occur over irradiated fuel or safe shutdown equipment, the consequence of the load drop is evaluated. If the evaluation concludes that the load drop is not acceptable, an alternate path is evaluated, or the lift is prohibited.
- The lifting equipment is in compliance with applicable ANSI standards and has factors of safety that meet or exceed the requirements of the applicable standards.
- Operator training is provided prior to actual lifts.
- Inspection of crane components is performed in accordance with the manufacturer recommendations.

Plant procedures require that an operating radiation monitor is mounted on any crane when it is handling fuel. Refer to Subsection 11.5.6.4 for a discussion of augmented radiation monitoring during fuel handling operations.

9.1.5.4 Inservice Inspection/Inservice Testing

Preoperational inspection and testing of overhead cranes is governed by ASME NOG-1. Tests include operational testing with 100 percent load to demonstrate function and speed controls for bridge, trolley, and hoist drives and proper functioning of limit switches, locking, and safety devices. A rated load test is performed with a 125 percent load.

Following plant startup, inservice inspection of overhead cranes is governed by site-specific procedures in accordance with ANSI B30.2. Testing of crane modifications is governed by ASME NOG-1. Inservice inspection and testing of other cranes and hoists is in accordance with manufacturer’s recommendations and applicable industry standards.

In-service inspection and testing of special lifting devices and slings used in safety-related areas of the plant are in accordance with ANSI N14.6 and ANSI B30.9.

The above requirements are part of the plant inspection program for the overhead heavy load handling system, which is implemented through procedures. In addition to the above inspections, the procedures reflect the manufacturers' recommendations for inspection and the NUREG-0612 recommendations.

The overhead heavy load handling equipment inservice inspection procedures, as a minimum, address the following:

- Identification of components to be examined
- Examination techniques
- Inspection intervals
- Examination categories and requirements
- Evaluation of examination results

The overhead heavy load handling program, including system inspections, is implemented prior to receipt of fuel onsite.

9.1.5.5 Load Handling Procedures

Load handling operations for heavy loads that are handled over, could be handled over or are in the proximity of irradiated fuel or safe shutdown equipment are controlled by written procedures. As a minimum, procedures are used for handling loads with the spent fuel cask bridge and polar cranes, and for those loads listed in Table 3.1-1 of NUREG 0612. The procedures include and address the following elements:

- The specific equipment required to handle load (e.g., special lifting devices, slings, shackles, turnbuckles, clevises, load cells, etc.).
- Qualification and training of crane operators and riggers in accordance with chapter 2-3.1 of ASME B30.2, "Overhead and Gantry Cranes."
- The requirements for inspection and acceptance criteria prior to load movement.
- The defined safe load path and provisions to provide visual reference to the crane operator and/or signal person of the safe load path envelope.
- Specific steps and proper sequence to be followed for handling load.
- Precautions, limitations, prerequisites, and/or initial conditions associated with movement of heavy loads.
- The testing, inspection, acceptance criteria and maintenance of overhead heavy load handling systems. These procedures are in accordance with the manufacturer recommendations and are consistent with ANSI B30.2 or with other appropriate and applicable ANSI standards.

Safe load paths are defined for movement of heavy loads to minimize the potential for a load drop on irradiated fuel in the reactor vessel, spent fuel pool or safe shutdown equipment. Paths are defined clearly in procedures and equipment layout drawings. Equipment layout drawings showing the safe load path are used to define safe load paths in load handling procedures. Deviation from defined safe load paths requires a written alternative procedure approved by a plant safety review committee.

9.1.6 Combined License Information for Fuel Storage and Handling

9.1.6.1 Structural Dynamic and Stress Analysis for New Fuel Rack

The confirmatory structural dynamic and stress analysis for the new fuel rack, as described in Subsection 9.1.1.2.1, is addressed in APP-GW-GLR-026 (Reference 16).

9.1.6.2 Criticality Analysis for New Fuel Rack

The confirmatory criticality analysis for the new fuel rack, as described in Subsection 9.1.1.3, is addressed in APP-GW-GLR-030 (Reference 17).

This report (Reference 17) addresses the degradation of integral neutron absorbing material in the new fuel pool storage racks as identified in GL-96-04, and assesses the integral neutron absorbing material capability to maintain a 5-percent subcriticality margin.

9.1.6.3 Structural Dynamic and Stress Analysis for Spent Fuel Racks

The confirmatory structural dynamic and stress analysis for the spent fuel racks, as described in Subsection 9.1.2.2.1, is addressed in APP-GW-GLR-033 (Reference 18).

9.1.6.4 Criticality Analysis for Spent Fuel Racks

The confirmatory criticality analysis for the spent fuel racks, as described in Subsection 9.1.2.3, is addressed in APP-GW-GLR-029P (Reference 20).

9.1.6.5 Inservice Inspection Load Handling Systems

The program for inservice inspection of the light load handling system and the overhead heavy load handling system are addressed in Subsections 9.1.4.4 and 9.1.5.4.

9.1.6.6 Operating Radiation Monitor

The radiation monitor mounted on any crane or fuel handling machine when it is handling fuel is addressed in Subsections 9.1.4.3.8 and 9.1.5.3.

9.1.6.7 Coupon Monitoring Program

A spent fuel rack Metamic coupon monitoring program will be implemented when the plant is placed into commercial operation. This program will include tests to monitor bubbling, blistering, cracking, or flaking; and a test to monitor for corrosion, such as weight loss measurements and / or visual examination. The program will also include testing to monitor changes in physical properties of the absorber material, including neutron attenuation and thickness measurements.

The program will include the methodology and acceptance criteria for the tests listed and provide corrective action requirements based on vendor recommendations and industry operating experience. The program will be implemented through plant procedures.

Metamic Monitoring Acceptance Criteria:

- Verification of continued presence of the boron is performed by neutron attenuation measurement. A decrease of no more than 5% in Boron-10 content, as determined by neutron attenuation, is acceptable. This is equivalent to a requirement for no loss in boron within the accuracy of the measurement.

- Coupons are monitored for unacceptable swelling by measuring coupon thickness. An increase in coupon thickness at any point of no more than 10% of the initial thickness at that point is acceptable.

Changes in excess of either of the above two acceptance criteria are investigated under the corrective action program and may require early retrieval and measurement of one or more of the remaining coupons to provide validation that the indicated changes are real. If the deviation is determined to be real, an engineering evaluation is performed to identify further testing or any corrective action that may be necessary.

Additional parameters are examined for early indications of the potential onset of Metamic degradation that would suggest a need for further attention and possibly a change in the coupon withdrawal schedule. These include visual inspection for surface pitting, blistering, cracking, corrosion or edge deterioration, or unaccountable weight loss in excess of the measurement accuracy.

9.1.7 References

1. ANSI N16.1-75, Nuclear Criticality Safety in Operations with Fissionable Materials Outside Reactors.

2. ANSI N16.9-75, Validation of Calculational Methods for Nuclear Criticality Safety.

3. ANSI N210-76, Design Objectives for Light Water Reactor Spent Fuel Storage Facilities at Nuclear Power Stations.

4. ANS 57.2-1983, Design Requirements for Light Water Reactor Spent Fuel Storage Facilities at Nuclear Power Plants.

5. USNRC NUREG-0800, SRP 3.8.4, Revision 1, Appendix D, “Technical Position on Spent Fuel Pool Racks,” July 1981.

6. ANS 57.1-1992, Design Requirements for Light Water Reactor Fuel Handling Systems.

7. Specifications for Electric Overhead Travelling Cranes CMAA, Specification 70 – 2000.

8. USNRC, “Control of Heavy Loads at Nuclear Power Plants,” NUREG-0612, July 1980.

9. “Overhead and Gantry Cranes,” ANSI/ASME B30.2-1990.

10. Not used.

11. USNRC, “Single-Failure-Proof Cranes for Nuclear Power Plants,” NUREG-0554, May 1979.

12. “Rules for Construction of Overhead and Gantry Cranes (Top Running Bridge, Multiple Girder),” ASME NOG-1-1998.

13. Not used.

14. “Special Lifting Devices for Shipping Containers Weighing 10,000 Pounds or More,” ANSI N14.6-1993.

15. “Slings,” ASME/ANSI B30.9-1996.

16. APP-GW-GLR-026, “New Fuel Storage Rack Structural/Seismic Analysis,” Westinghouse Electric Company LLC.

17. APP-GW-GLR-030, “New Fuel Storage Rack Criticality Analysis,” Westinghouse Electric Company LLC.

18. APP-GW-GLR-033, “Spent Fuel Storage Rack Structural/Seismic Analysis,” Westinghouse Electric Company LLC.

19. Not used.

20. APP-GW-GLR-029P, Revision 3, “AP1000 Spent Fuel Storage Racks Criticality Analysis,” Westinghouse Electric Company LLC (Westinghouse Proprietary).

21. USNRC, 10 CFR 50.68, “Criticality Accident Requirements,” January 2003.

22. USNRC, Regulatory Guide 1.124, Revision 1, “Service Limits and Loading Combinations for Class 1 Linear-Type Component Supports,” January 1978.

23. USNRC, Regulatory Issue Summary 2005-25, Supplement 1, “Clarification of NRC Guidelines for Control of Heavy Loads,” May 2007.

24. “Source Book for Metamic Performance Assessment,” Holtec Report HI-2043215, Revision 2, Holtec International, September 2006.

25. Safety Evaluation by the Office of Nuclear Reactor Regulation Related to Holtec International Report HI-2022871 Regarding the Use of Metamic® in Fuel Pool Applications Facility Operating License NOS DPR-51 and NPF-6 Entergy Operations, Inc Arkansas Nuclear One, Unit Nos. 1 and 2 Docket Nos. 50-313.

Table 9.1-1
Loads and Load Combinations for Fuel Racks

Load Combination	Service Level
D + L D + L + T_o	Level A (Note 1, Note 2)
D + L + T_a D + L + T_o + P_f	Level B (Note 1, Note 2)
D + L + T_a + E'	Level D (Note 2)
D + L + F_d	The functional capability of the fuel racks should be demonstrated. (Note 3)

Note:

1. There is no operating basis earthquake (OBE) for the AP1000 plant.
2. The fuel racks are freestanding; thus, there is minimal or no restraint against free thermal expansion at the base of the rack. As a result, thermal loads applied to the rack (T_o and T_a) produce only local (secondary) stresses.
3. This load combination is not required for the new fuel rack since a load drop is deemed an unlikely accident with a single failure-proof hoist.

Abbreviations are those used in NUREG-0800, Section 3.8.4 (including Appendix D) of the Standard Review Plan (SRP):

D = Dead weight induced loads (including fuel assembly weight)
L = Live load (not applicable to fuel racks since there are no moving objects in the rack load path)
F_d Force caused by the accidental drop of the heaviest load from the maximum possible height
P_f = Upward force on the racks caused by postulated stuck fuel assembly
E' = Safe shutdown earthquake (SSE)
T_o = Differential temperature induced loads based on the most critical transient or steady-state condition under normal operation or shutdown conditions
T_a = Differential temperature induced loads based on the postulated abnormal design conditions

Table 9.1-2
Spent Fuel Pool Cooling and Purification System Design Parameters

Spent fuel pool storage capacity	889 total fuel assemblies
Spent fuel pool water volume (including racks without fuel at water level of 15 inches below the operating deck) (gallons)	190,500
Fuel transfer canal, including gate, water volume (gallons)	63,500
Minimum combined volume of spent fuel pool and fuel transfer canal above fuel to elevation 6 feet below the operating deck) (gallons)	129,500
Minimum volume of the cask washdown pit (gallons)	30,900
Nominal boron concentration of water (ppm)	2,700
Maximum normal refueling case (full core offload) Water temperature with one spent fuel cooling system cooling train and one normal residual heat removal system cooling train in operation (°F)	<140
Maximum emergency core unload case Water temperature with both spent fuel cooling system cooling trains and one normal residual heat removal system cooling train in operation (°F)	<140

Table 9.1-3 (Sheet 1 of 2)
Component Data – Spent Fuel Pool Cooling and Purification System

Spent Fuel Pool Pump		
Number		2
Design pressure (psig)		150
Design temperature (°F)		250
Nominal flow (gallons/minute)		1200
Minimum flow to support normal cooling (gpm)		900
Material		Stainless Steel
Spent Fuel Pool Heat Exchangers		
Number		2
Type		Plate
Design heat transfer (Btu/hour)		14.75×10^6
Design capacity (Btu/hour-°F)		24.0×10^5
Minimum capacity to support normal cooling (Btu/hour-°F)		22.0×10^5
	Side 1	**Side 2**
Design pressure (psig)	150	150
Design temperature (°F)	250	250
Nominal flow (pounds/hour)	6.23×10^5	5.94×10^5
Inlet temperature (°F), typ.	89.5	120
Outlet temperature (°F), typ.	113.3	95.1
Fluid circulated	Component cooling water	Spent fuel pool water
Material	Stainless steel	Stainless steel
Spent Fuel Pool Demineralizers		
Number		2
Design pressure (psig)		150
Design temperature (°F)		200
Nominal flow (gallons/minute)		250
Nominal resin volume (cubic feet)		75
Material		Stainless steel

Table 9.1-3 (Sheet 2 of 2)
Component Data – Spent Fuel Pool Cooling And Purification System

Spent Fuel Pool Filter	
Number	2
Design pressure (psig)	150
Design temperature (°F)	250
Nominal flow (gallons/minute)	250
Filtration requirement	98% retention of particles above 5 µm
Material, vessel	Stainless steel

Table 9.1-4
Station Blackout/Seismic Event Times(1)(9)

Event	Time to Saturation(1) (hours)	Height of Water Above Fuel at 72 Hours(4) (feet)	Height of Water Above Fuel at 7 Days(4) (feet)
Seismic Event(2) – Power Operation Immediately Following a Refueling(7)	7.38	1.4(6)	1.4(6)
Seismic Event(8) – Refueling, Immediately Following Spent Fuel Region Offload(3)(7)	5.59	4.2(5)	4.2(5)
Seismic Event(8) – Refueling, Emergency Full Core Off-Load(3) Immediately Following Refueling(7)	2.33	8.0(5)	8.0(6)

Notes:

1. Times calculated neglect heat losses to the passive heat sinks in the fuel area of the auxiliary building.
2. Seismic event assumes water in the pool is initially drained to the level of the spent fuel pool cooling system connection simultaneous with a station blackout. Fuel cooling water sources are spent fuel pool, fuel transfer canal (including gate), and cask washdown pit for 72 hours. Between 72 hours and 7 days fuel cooling water provided from passive containment cooling system ancillary water storage tank.
3. Fuel movement complete, 150 hours after shutdown.
4. See Subsection 9.1.3.5 for minimum water level.
5. Alignment of PCS water storage for supply of makeup water permits maintaining pool level at this elevation. Decay heat in reactor vessel is at or below 6.0 MW, thus no PCS water is required for containment cooling.
6. Alignment of the PCS ancillary water storage tank and initiation of PCS recirculation pumps provide a makeup water supply to maintain this pool level or higher above the top of the fuel.
7. The number of fuel assemblies refueled has been conservatively established to include the worst case between an 18-month fuel cycle plus 5 defective fuel assemblies (69 total assemblies or 44% of the core) and a 24-month fuel cycle plus 5 defective fuel assemblies (77 total assemblies or 49% of the core).
8. Seismic event assumes water in the pool is initially drained to the level of the spent fuel pool cooling system connection simultaneous with a station blackout. Fuel cooling water sources are spent fuel pool, fuel transfer canal (including gate), cask washdown pit, cask loading pit, and passive containment cooling system water storage tank for 72 hours.
9. A minimum of 18 hours is available for operator action to align makeup water to the spent fuel pool after a seismic event.

Table 9.1-5
Nuclear Island Heavy Load Handling Systems(1)

Name	Crane/Hoist Type	Location (Building)	Maximum Load Rating (tons)
Containment Polar Crane	Overhead bridge	Containment	300(2)
Equipment Hatch Hoist	Fixed hoist	Containment	10
Maintenance Hatch Hoist	Fixed hoist	Containment	10
Cask Handling Crane	Overhead bridge	Auxiliary	150
MSIV Monorails Hoist A	Monorail hoists	Auxiliary	2
MSIV Monorails Hoist B	Monorail hoists	Auxiliary	2

Notes:
1. Nuclear island elevators are discussed in the heavy loads analysis.
2. Trolley maximum load rating for a critical load.

Table 9.1.5-1
Cask Handling Crane Component Data

Bridge	
Bridge span	61.75 ft
Travel speed	See Note 1.
Service/parking/emergency braking system (type and number)	Friction (one) for all three functions
Trolley	
Travel speed	See Note 1.
Service/parking/emergency braking system (type and number)	Friction (one) for all three functions
Main Hoist	
Approximate capacity	See Table 9.1-5.
Hook speed	See Note 1.
Approximate hook travel (elevation)	To cask transport in loading bay (at grade elevation)
Main hoist braking system (diverse systems)	
Control brakes (type and number)	Electric (one)
Holding brakes (type and number)	Friction (one)
Emergency drum brake (type and number)	Friction (one)
Auxiliary Hoist	
Approximate capacity	10 tons
Hook speed	See Note 1
Approximate hook travel (elevation)	To cask transport in loading bay (at grade elevation)
Auxiliary hoist braking system (diverse systems)	
Control brakes (type and number)	Electric (one)
Holding brakes (type and number)	Friction (one)
Emergency drum brake (type and number)	Friction (one)

Note:
1. Bridge, trolley, and hoist speeds are within the recommended ranges of ASME NOG-1.

Table 9.1.5-2
Special Lifting Devices Used for the Handling of Critical Loads

Polar Crane Special Lifting Devices	**Description**
Integrated head package (IHP)	The IHP combines several separate components into an integral unit. It incorporates the lifting device that provides the interface between the polar crane and the reactor vessel head.
Reactor internals lifting rig	The reactor internals lifting rig is a three-legged carbon steel and stainless steel structure that is attached to the main hook for handling of the upper and lower reactor internals packages.
Reactor coolant pump (RCP)	The RCP handling machine is used for removal of the RCP motor and hydraulic elements from the pump casing. The pump/motor shell includes lifting lugs which are attached to a lifting device to allow the RCP motor and hydraulic elements to be handled by the polar crane main hook.
Cask Handling Crane Special Lifting Devices	**Description**
Cask lift yoke, cask lift yoke extension, and loaded canister handling equipment	These devices are used for the handling of the casks and loaded canisters, which provide the interface between the cask handling crane and the shipping cask or loaded canister.

Table 9.1.5-3
Polar Crane Component Data

Bridge	
Bridge span	See Figure 1.2-12
Travel speed	See Note 1
Service/parking/emergency braking system (type and number)	Friction (one) for all three functions
Trolley	
Travel speed	See Note 1
Service/parking/emergency braking system (type and number)	Friction (one) for all three functions
Main Hoist	
Approximate capacity	See Table 9.1-5
Hook speed	See Note 1
Approximate hook travel (elevation)	To reactor vessel internals
Main hoist braking system (diverse systems)	
Control brakes (type and number)	Electric (one)
Holding brakes (type and number)	Friction (one)
Emergency drum brake (type and number)	Friction (one)
Auxiliary Hoist	
Approximate capacity	25 tons
Hook speed	See Note 1
Approximate hook travel (elevation)	To reactor coolant pump
Auxiliary hoist braking system (diverse systems)	
Control brakes (type and number)	Electric (one)
Holding brakes (type and number)	Friction (one)
Emergency drum brake (type and number)	Friction (one)

Note:
1. Bridge, trolley and hoist speeds are within the recommended ranges of ASME NOG-1.

Table 9.1.5-4
Equipment Hatch Hoist Component Data

Hoist	
Approximate capacity	See Table 9.1-5.
Hoist speed	See Note 1.
Approximate load block travel (elevation)	To hatch (lowered position)
Main hoist braking system (diverse systems)	
Control brakes (type and number)	Hoist motor regenerative braking
Holding brakes (type and number)	Friction (two)
Emergency drum brake (type and number)	Friction (one)

Note:
1. Hoist speed is within the recommended range of ASME NOG-1.

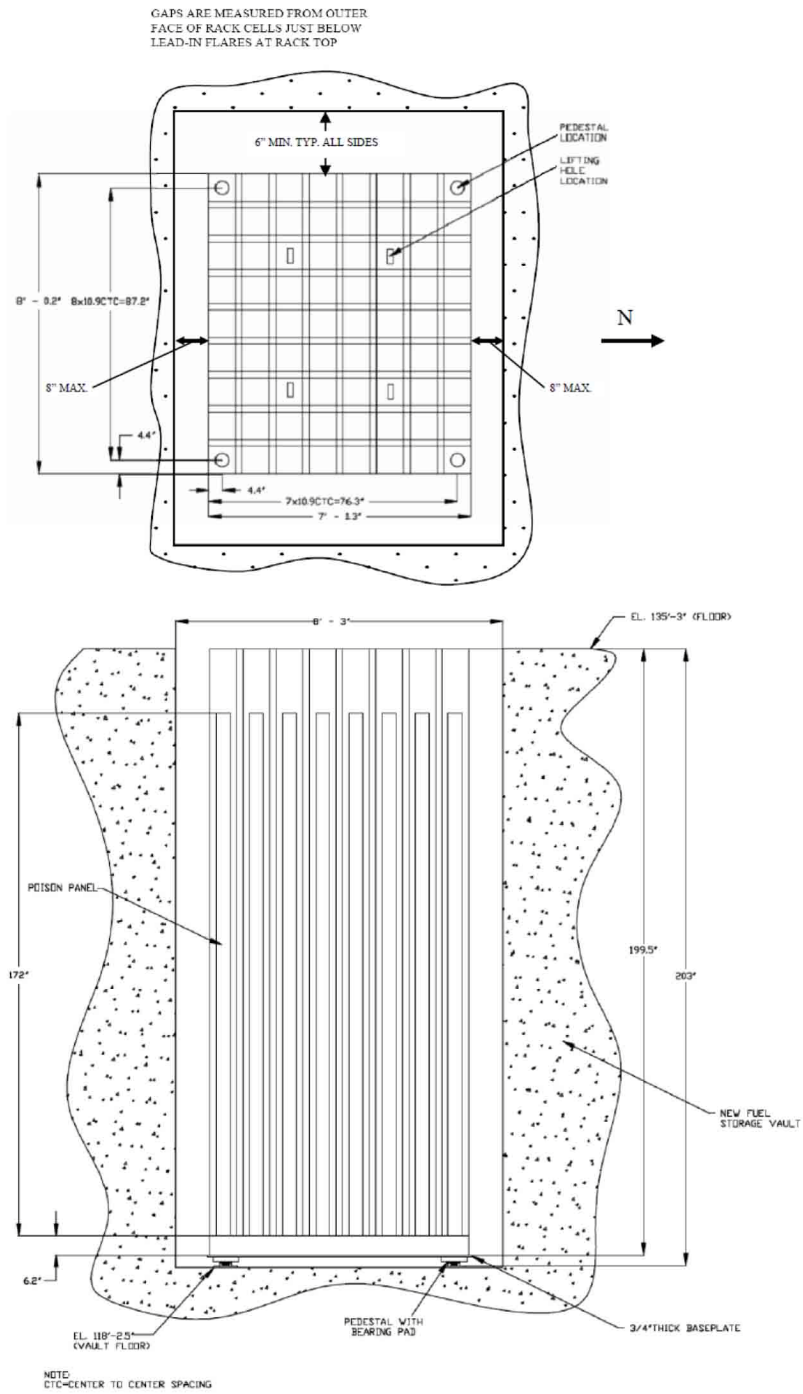

Figure 9.1-1 (Sheet 1 of 2)
New Fuel Storage Rack Layout (72 Storage Location)

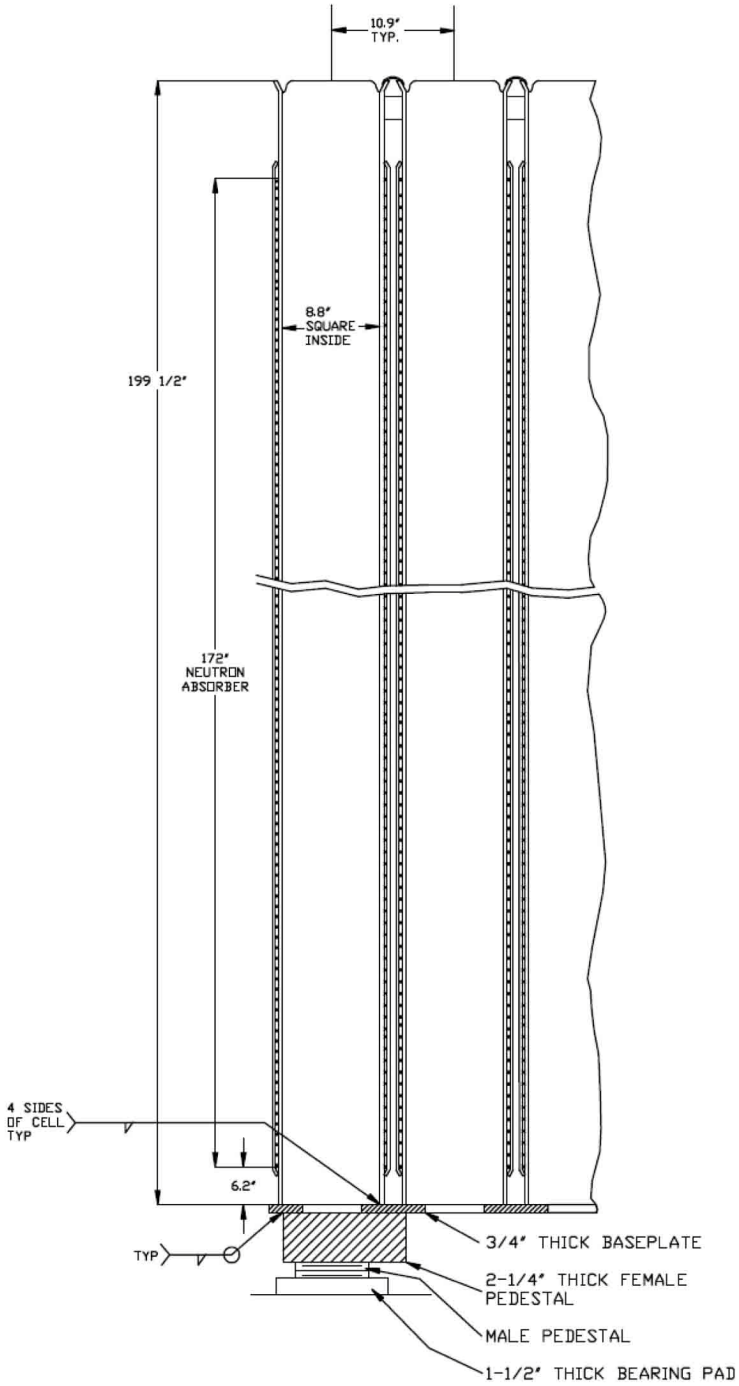

Figure 9.1-1 (Sheet 2 of 2)
New Fuel Storage Rack Cross Section

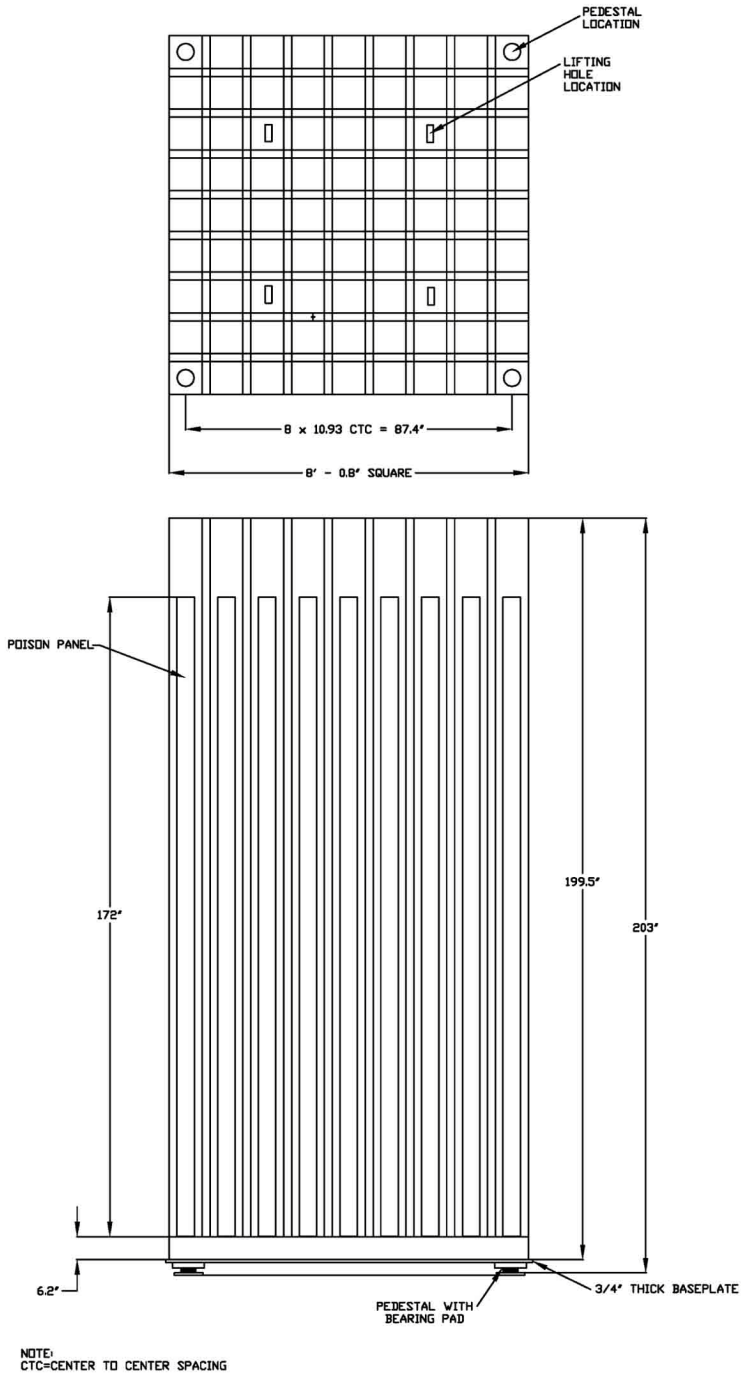

Figure 9.1-2 (Sheet 1 of 2)
Region 1 Spent Fuel Storage Rack Layout

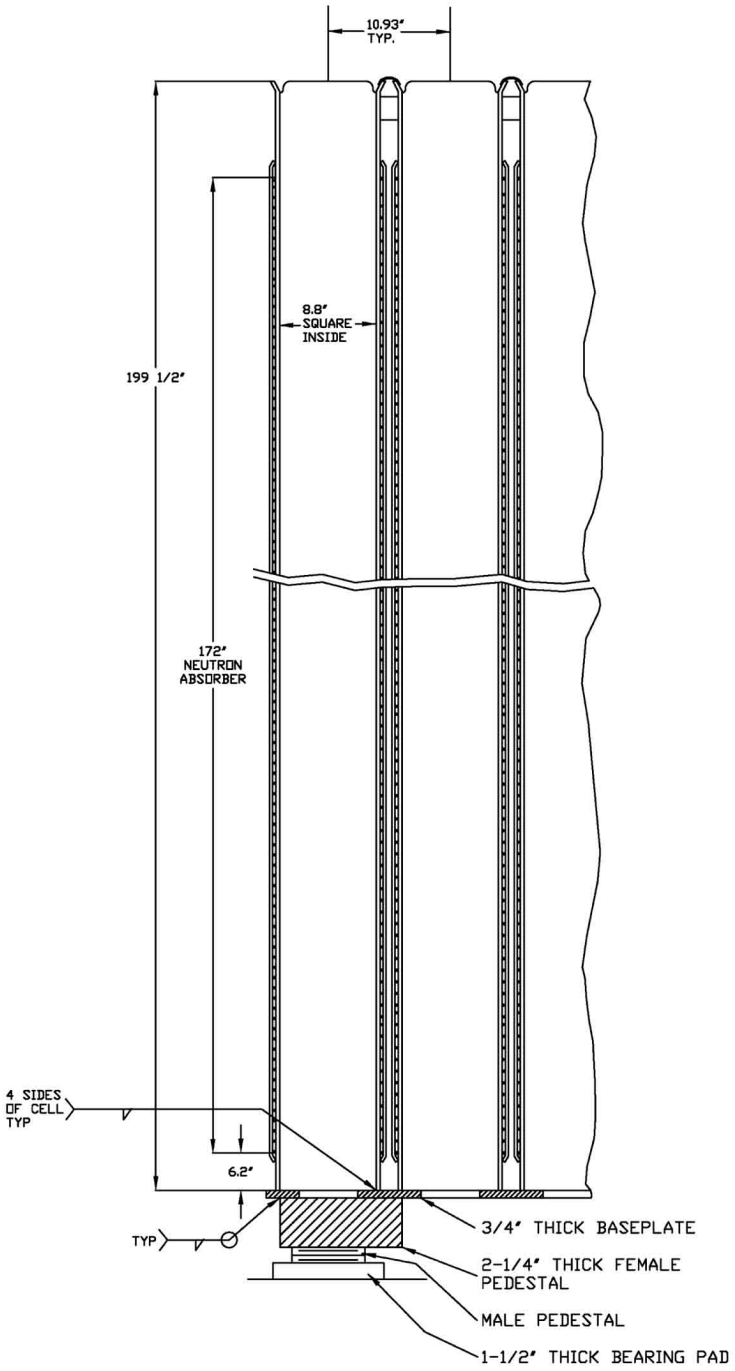

Figure 9.1-2 (Sheet 2 of 2)
Region 1 Spent Fuel Storage Rack Cross Section

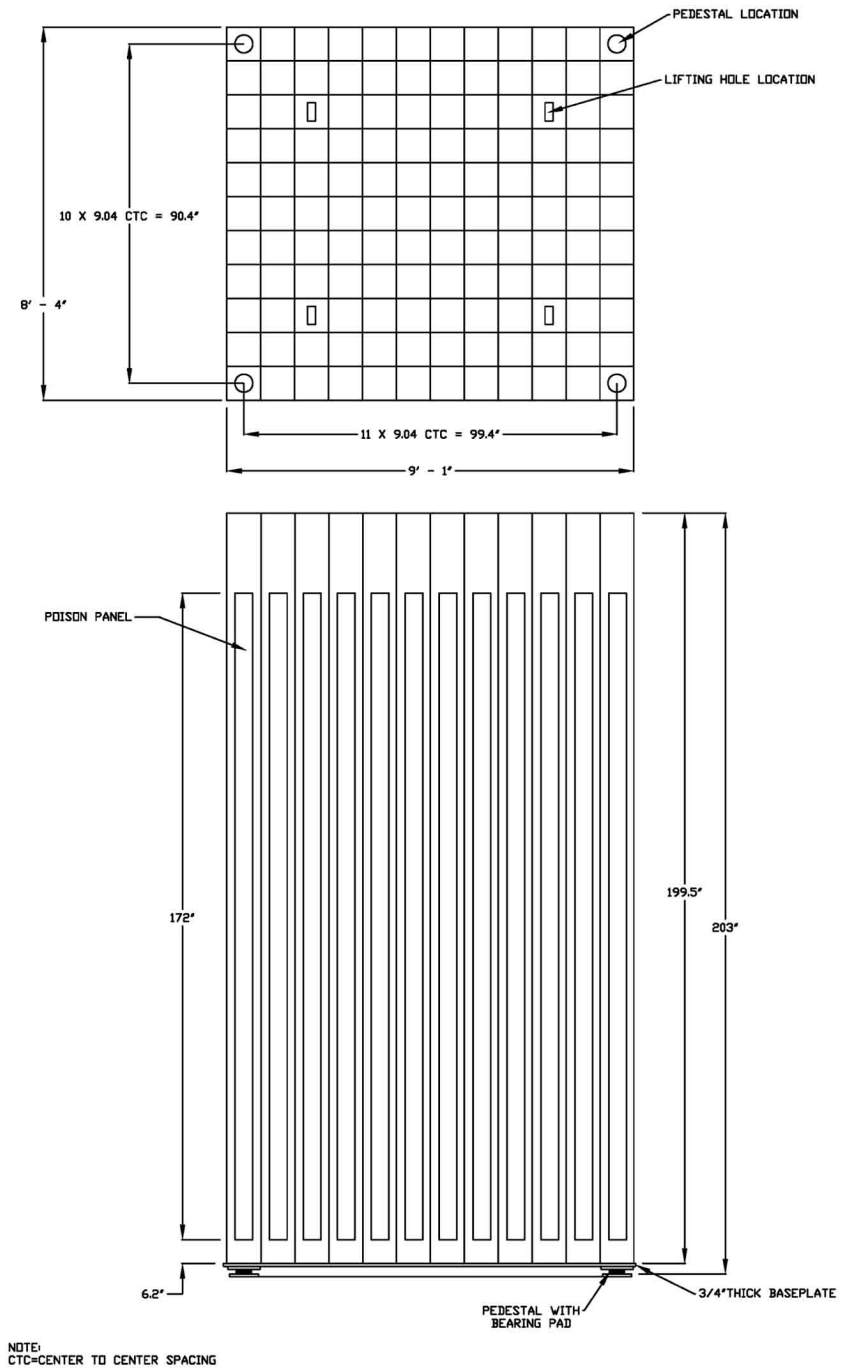

Figure 9.1-3 (Sheet 1 of 2)
Region 2 Spent Fuel Storage Rack Layout

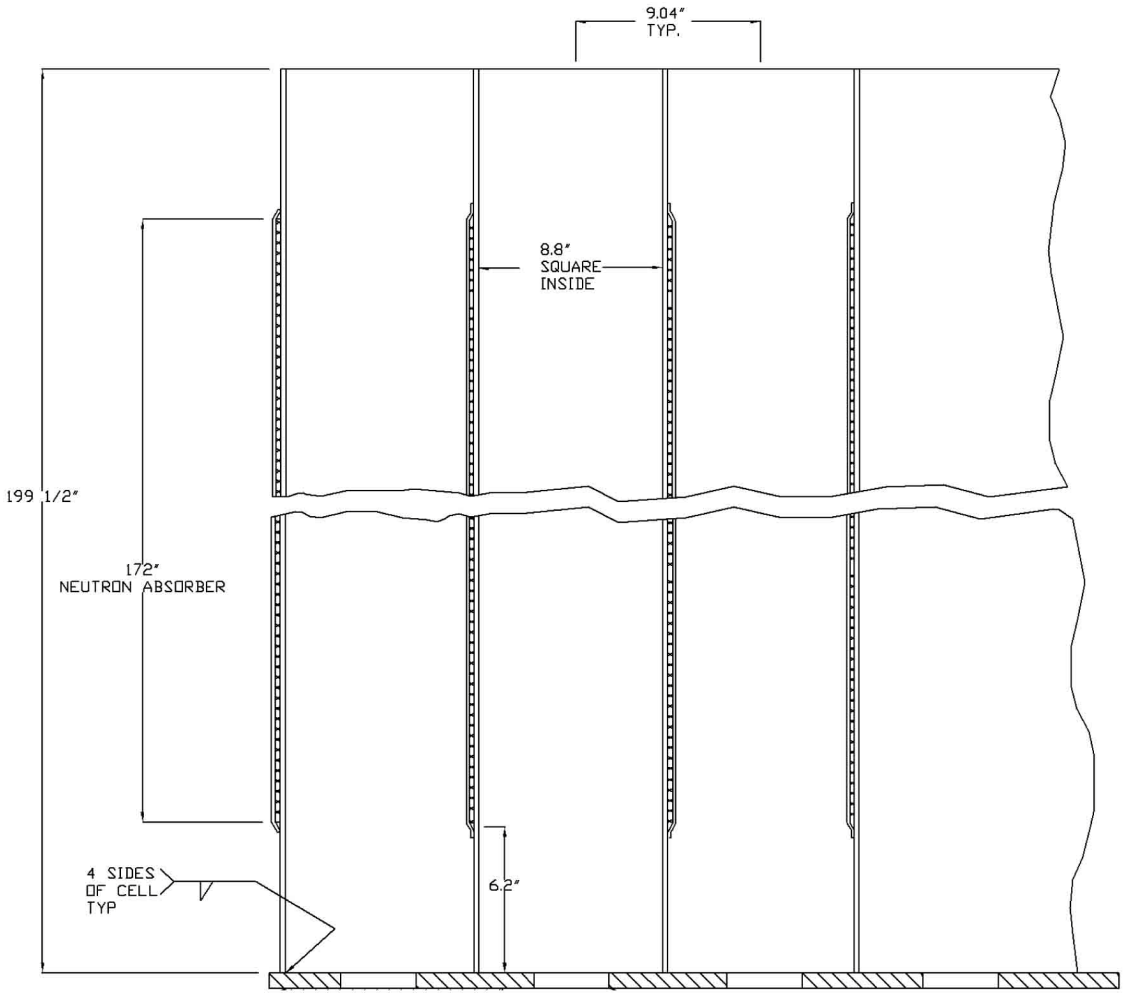

Figure 9.1-3 (Sheet 2 of 2)
Region 2 Spent Fuel Storage Rack Cross Section

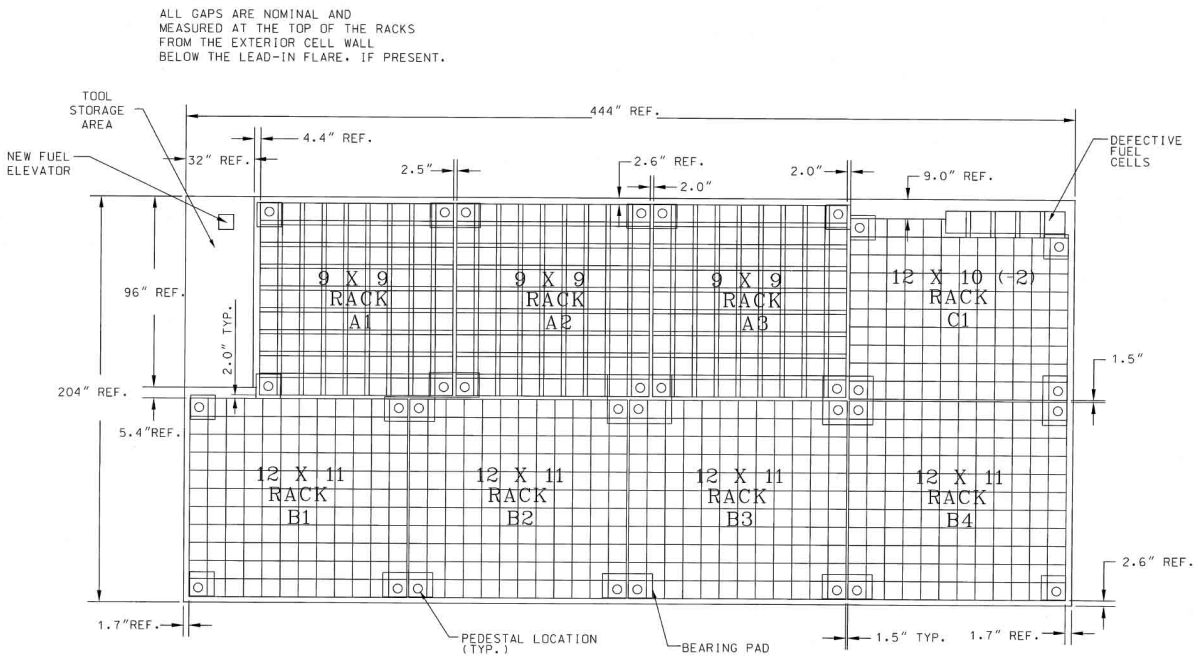

Figure 9.1-4
Spent Fuel Storage Pool Layout
(889 Storage Locations)

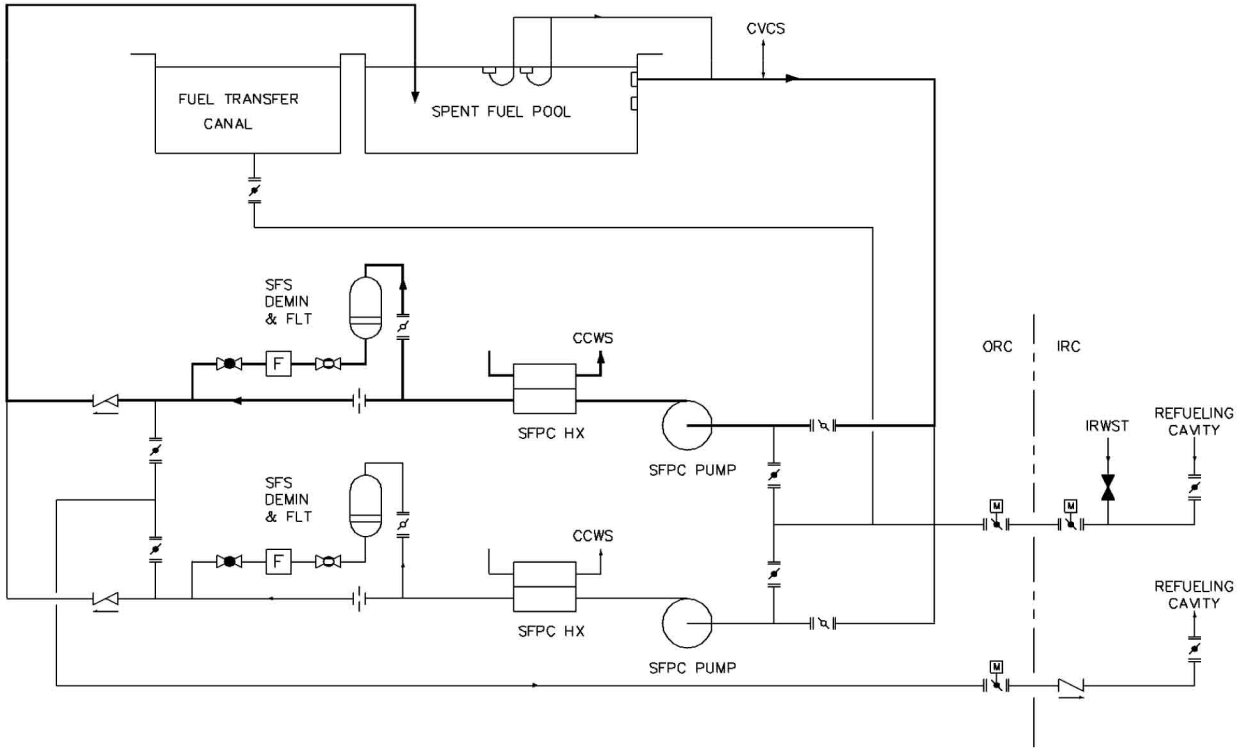

Figure 9.1-5
Spent Fuel Pool Cooling System
(Normal Operation)

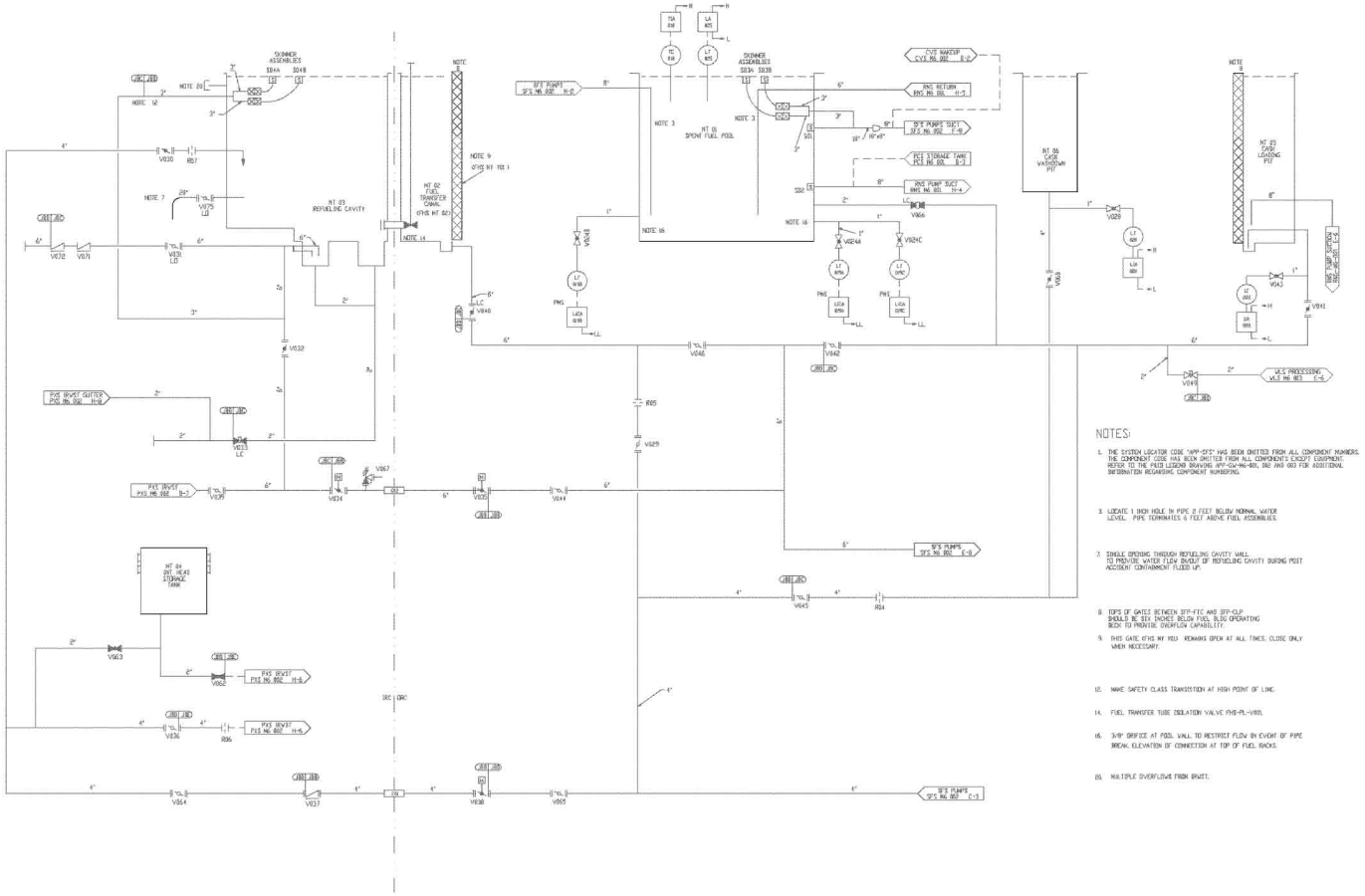

Figure 9.1-6 (Sheet 1 of 2)
Spent Fuel Pool Cooling System
Piping and Instrumentation Diagram
(REF) SFS 001

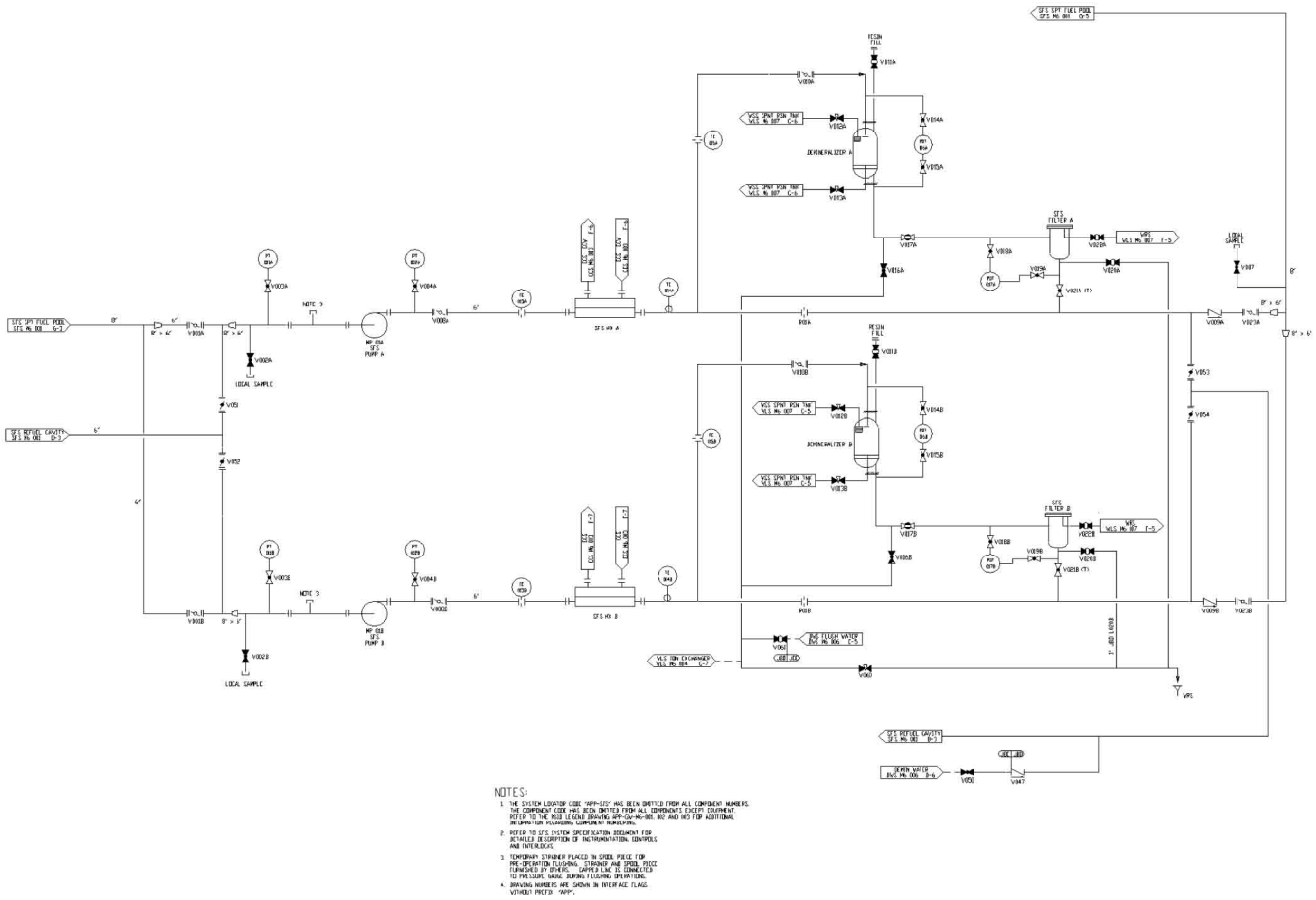

Figure 9.1-6 (Sheet 2 of 2)
Spent Fuel Pool Cooling System
Piping and Instrumentation Diagram
(REF) SFS 002

9.2 Water Systems

9.2.1 Service Water System

The service water system (SWS) supplies cooling water to remove heat from the nonsafety-related component cooling water system (CCS) heat exchangers in the turbine building.

9.2.1.1 Design Basis

9.2.1.1.1 Safety Design Basis

The service water system serves no safety-related function and therefore has no nuclear safety design basis.

Failure of the service water system or its components will not affect the ability of safety-related systems to perform their intended function.

9.2.1.1.2 Power Generation Design Basis

The service water system provides cooling water to the component cooling water system heat exchangers located in the turbine building.

During normal power operation, the service water system supplies cooling water at a maximum temperature of 93.5°F to one component cooling water heat exchanger.

During plant cooldown and refueling, the service water system supplies cooling water to both component cooling water heat exchangers to support the cooling requirements for the component cooling water system specified in Subsection 9.2.2.1.2.

9.2.1.2 System Description

9.2.1.2.1 General Description

The service water system is shown in Figure 9.2.1-1. Classification of equipment and components is given in Section 3.2. The system consists of two 100-percent-capacity service water pumps, automatic backwash strainers, a two-cell cooling tower with a divided basin, and associated piping, valves, controls, and instrumentation.

The service water pumps, located in the turbine building, take suction from piping which connects to the basin of the service water cooling tower. Service water is pumped through strainers to the component cooling water heat exchangers for removal of heat. Heated service water from the heat exchangers then returns through piping to a mechanical draft cooling tower where the system heat is rejected to the atmosphere. Cool water, collected in the tower basin, flows through fixed screens to the pump suction piping for recirculation through the system.

A small portion of the service water flow is normally diverted to the circulating water system. This blowdown is used to control levels of solids concentration in the SWS. An alternate blowdown flow path is provided to the waste water system (WWS).

The service water system is arranged into two trains of components and piping. Each train includes one service water pump, one strainer, and one cooling tower cell. Each train provides 100-percent-capacity cooling for normal power operation. Cross-connections between the trains upstream and downstream of the component cooling water system heat exchangers allows either service water

pump to supply either heat exchanger, and allows either heat exchanger to discharge to either cooling tower cell.

Temperatures in the system are moderate and the pressure of the service water system fluid is kept above saturation at all locations. This, along with other design features of the system arrangement and control of valves, minimizes the potential for thermodynamic or transient water hammer.

Service water system materials are compatible with the cooling water chemistry and the chemicals used for the control of long-term corrosion and organic fouling. Water chemistry is controlled by the turbine island chemical feed system (CFS).

Flooding of the turbine building resulting from a service water system failure is less severe than that for the circulating water system. Refer to Subsection 10.4.5.2.3 for a description of flooding due to the circulating water system.

9.2.1.2.2 Component Description

Service Water Chemical Injection

The turbine island chemical feed system equipment injects the required chemicals into the service water system. This injection maintains a noncorrosive, nonscale forming condition and limits biological film formation. Chemicals are injected into service water pump discharge piping located in the turbine building.

The chemicals can be divided into six categories based upon function: biocide, algicide, pH adjustor, corrosion inhibitor, scale inhibitor, and silt dispersant. Specific chemicals used within the system, other than the biocide, are determined by the site water conditions. The pH adjustor, corrosion inhibitor, scale inhibitor, and dispersant are metered into the system continuously or as required to maintain proper concentrations. A sodium hypochlorite treatment system is provided for use as the biocide and controls microorganisms that cause fouling. The biocide application frequency may vary with seasons. Algicide is applied, as necessary, to control algae formation on the cooling tower. The impact of toxic material on main control room habitability is addressed in Section 6.4.

Chemical concentrations are measured through analysis of grab samples. Chlorine residual is measured to monitor the effectiveness of the biocide treatment. Addition of water treatment chemicals is performed by chemical feed system injection metering pumps and is adjusted as required.

Chemical injections are interlocked with each service water pump to prevent injection into a train when the associated service water pump is not running.

Cooling Tower

The cooling tower is a rectilinear mechanical draft structure.

The cooling tower is a counterflow, induced draft tower and is divided into two cells. Each cell utilizes one fan, located in the top portion of the cell, to draw air upward through the fill counter to the downward flow of water. Each fan is driven by a two speed electrical motor through a gear reducer. During normal power operation, one cell is inactive and water flow to that cell is shut off by a motor operated isolation valve. One operating service water pump supplies flow to the operating cell. When the service water system is used to support plant shutdown cooling, both tower cells are normally placed in service along with both service water pumps, for increased cooling capacity.

The cooling tower cold water temperature is normally automatically controlled by operation of the tower fans. The fan in an active cell will be either on high speed, low speed or off, depending on the

temperature of the heated service water returning to the cooling tower. When necessary, the water flow to each cooling tower cell can be diverted directly to the basin, bypassing the tower internals. This is achieved by opening a full flow bypass valve. The bypass can be used during plant startup in cold weather to maintain service water system temperature above 40°F.

After transiting through the cooling tower, cooled service water is collected in a basin located below the tower structure. The basin is partitioned into two halves, with each half collecting the segregated flow from one tower cell. An opening in the partition normally allows the two basin halves to communicate, but a stoplog can be inserted to allow one half of the basin to remain full while the other half is drained for maintenance. Raw water is automatically supplied to the basin to makeup for evaporation, drift and blowdown losses. An alternate makeup water supply is available by gravity flow from one of the fire protection storage tanks, using water that is not dedicated to fire protection purposes. With no makeup to the cooling tower basin, the storage capacity of the basin allows continued system operation for at least 12 hours under limiting conditions with a minimum usable volume of 230,000 gallons, provided that blowdown flow is isolated.

The SWS Cooling Tower was evaluated for potential impacts from interference and air restriction effects due to yard equipment layout and tower operation in an adjacent unit. Based on unit spacing, yard equipment layout, and the margins inherent in the performance requirements and design conditions of the towers, no adverse impacts were determined.

Service Water Strainers

An automatic self-cleaning strainer is located in the service water supply piping to each component cooling water heat exchanger. The strainer is sized for a capacity compatible with the flow through the heat exchanger. When in service, each strainer will periodically backwash on a timed cycle, or will backwash if the differential pressure across the strainer exceeds a setpoint. The backwash cleaning features of the strainer can also be manually actuated. Backwash flow from the strainers is discharged to waste at the waste water retention basins.

Service Water Pumps

The service water system includes two service water pumps providing cooling water in the quantities and operating conditions listed in Table 9.2.1-1.

The service water pumps are vertical, centrifugal, constant speed, electric motor-driven pumps. The pumping elements of each pump are enclosed within a suction barrel which connects to supply piping from the cooling tower basin. The suction barrel of each pump is located in the circulating water pipe trench area of the turbine building. The pumps are powered from the normal ac power system and are backed by the standby power source for occurrences of loss of normal ac power. Each pump provides 100 percent of the normal power operation flow requirements and is therefore capable of supporting normal power operation with one pump out of service for maintenance.

The starting logic for the service water pumps requires at least one of the cooling tower valves to be open prior to pump start to provide a flow path through the cooling tower or tower bypass. The pump starting logic also interlocks with the motor operated valve at the discharge of each pump. The pump starts with the discharge valve closed and the valve then opens at a controlled rate to slowly admit water to the system while maintaining pump minimum flow. This feature results in reduced fluid velocities during system start to minimize transient effects that may occur as the system sweeps out air that may be present and obtains a water solid condition.

Piping

Service water piping is made of carbon steel and is designed, fabricated, installed, and tested in accordance with ANSI B31.1, Power Piping Code. High density polyethylene piping constructed to the requirements of ANSI B31.1, Appendix III is also used for the underground portions of the

auxiliary makeup line from the secondary fire water tank, and for the underground portions of the SWS blowdown line to the CWS cooling tower. Cooling water supply and return piping is accessible for inspection and/or wall thickness determination. Cooling water supply and return piping that runs in the yard is either routed within trenches or may be inspected from the inside.

The service water system is designed to accommodate transient effects that may be generated by the normal starting and stopping of pumps, opening and closing of valves, or other normal operating events. The system pumps water from the basin at the cooling tower, through piping and equipment, to a high point located at the cooling tower riser; the cooling water is then discharged in a spray fashion above the cooling tower basin. The system arrangement is such that high points in the system piping do not lead to the formation of vapor pressure voids upon loss of system pumping. Therefore, the potential for water hammer due to vapor collapse upon pump start is minimized.

Service Water System Valves

Manual isolation valves upstream and downstream of each component cooling water system heat exchanger can be used to isolate the heat exchanger and associated strainer from the service water system. The upstream valves are also normally used during power operation to align the service water system to the component cooling water heat exchanger in use by blocking flow to the inactive heat exchanger. Manual valves in the cross-connection lines between the two service water trains are normally open during power operation to allow the standby pump or standby cooling tower cell to quickly be placed in service if needed. The cross-connection valves are closed as necessary to isolate portions of the system for maintenance, and are normally closed when the system is configured for plant shutdown cooling with both trains in operation.

A motor operated isolation valve downstream of each pump automatically closes when the associated pump stops and automatically opens when the pump starts. Motor operated isolation valves are also used at the cooling tower to isolate flow to a cell that is inactive or out of service for maintenance. The motor operated valves for each train of service water pumps and cooling tower cells are powered by the same onsite standby power source as the associated pump and cooling tower cell fan.

The service water strainers are provided with air-operated backwash valves which open during a backwash cycle. These valves fail closed upon loss of control air or electrical power.

An air operated control valve is provided in the cooling tower blowdown line. This valve allows the plant operator to set the blowdown flowrate. The valve also provides automatic isolation of blowdown flow upon loss of offsite power. The valve fails closed upon loss of control air or electrical power.

Heat Exchangers

The heat exchangers served by the service water system are part of the component cooling water system. For information concerning the component cooling water system heat exchangers refer to Subsection 9.2.2.

9.2.1.2.3 System Operation

The service water system operates during normal modes of plant operation, including startup, power operation (full and partial loads), cooldown, shutdown, and refueling. The service water system is also available during loss of normal ac power conditions.

9.2.1.2.3.1 Service Water System Startup

For initial system startup, service water piping and equipment can be filled with raw water. Thereafter, at least one train normally remains in service. An inactive train is started by starting the associated pump and realigning valves as required.

9.2.1.2.3.2 Plant Startup

During plant startup, the service water system normally provides service to both component cooling water system heat exchangers. This requires that both service water pumps, strainers and cooling tower cells be in service. At the end of this phase of operation, when one of the component cooling water system heat exchangers is removed from service, one of the service water pumps, strainers and cooling tower cells may also be removed from service. Refer to Subsection 9.2.2 for a description of plant startup operation and the conditions under which two component cooling water system heat exchangers may be required.

9.2.1.2.3.3 Power Operation

The service water system, during normal power operation, provides cooling water at a maximum temperature of 93.5°F to the component cooling water heat exchanger in service. One service water pump and one cooling tower cell are in service. The flow rate and heat load are shown in Table 9.2.1-1.

The standby service water pump is automatically started if the operating pump should fail, thereby providing a reliable source of cooling water. The system is designed so either pump can serve as the operating or standby pump.

9.2.1.2.3.4 Plant Cooldown/Shutdown

During the plant cooldown phase in which the normal residual heat removal system has been placed in service and is providing shutdown cooling, the service water cooling tower provides cooling water at a temperature of 89.8°F or less when operating at design heat load and at an ambient wet bulb temperature of no greater than the maximum normal wet bulb temperature as defined in Chapter 2, Table 2.0-201. Two service water pumps and two cooling tower cells are normally used for plant cooldown, and the cross-connection valves between trains are normally closed. The service water system heat load and flow rate are shown in Table 9.2.1-1. During these modes of operation the normal residual heat removal system and the component cooling water system remove sensible and decay heat from the reactor coolant system. The service water system cooling towers are designed with sufficient margin so that normal time-related degradation of tower performance will not prohibit their support of this heat removal function. In the event of failure of a service water system pump or cooling tower fan, the cooldown time is extended.

9.2.1.2.3.5 Refueling

During refueling, the service water system normally provides cooling water flow to both component cooling water system heat exchangers. Two service water pumps normally provide flow through the system for refueling modes.

9.2.1.2.3.6 Loss of Normal AC Power Operation

In the event of loss of normal ac power, the service water pumps and cooling tower fans, along with the associated motor operated valves, are automatically loaded onto their associated diesel bus. This includes isolation of cooling tower blowdown, which minimizes drain down of the system while both pumps are off. What drainage of system fluid that does occur is replaced by air without vapor

cavities. The potential for water hammer on pump restart is minimized. Both pumps and both cooling tower cells automatically start after power from the diesel generator is available. Following automatic start, the operator may return the system to the appropriate configuration.

9.2.1.3 Safety Evaluation

The service water system has no safety-related functions and therefore requires no nuclear safety evaluation. If radioactive fluid is detected in the service water system, tower blowdown flow can be isolated by remote manual control. The tower blowdown valve fails closed upon loss of electrical power or instrument air.

9.2.1.4 Tests and Inspections

Preoperational testing is described in Chapter 14. The performance, structural, and leaktight integrity of system components is demonstrated by operation of the system.

9.2.1.5 Instrument Applications

Pressure indication, with low and high alarms, is provided for the discharge of each service water pump. A low pressure signal automatically starts the standby pump. Flow indication, with low and high alarms, is also provided for each service water pump. Due to the system configuration, pump flow indication can also normally be used to monitor flow through the heat exchanger or heat exchangers in service.

Temperature indication is provided for the service water supply to each component cooling water heat exchanger and for the discharge from each heat exchanger to determine the temperature differential across the heat exchanger. Heat exchanger inlet temperature indication also is used for performance monitoring of the service water cooling tower. Low and high heat exchanger inlet temperature alarms are provided. A high alarm is provided for the outlet temperature from each heat exchanger. Temperature instrumentation is provided for the service water return to each cooling tower cell to automatically control the operation of the associated cell fan.

Differential pressure measurement across each service water strainer is provided and will initiate backwash of the strainer on high differential. A high-high differential pressure alarm across the strainer is provided.

Power actuated valves in the SWS are provided with valve position indication instrumentation. In addition, the tower bypass valves are provided with position indication instrumentation.

Level indication is provided for the cooling tower basin along with high and low level alarms. The basin level signal is also used to control the normal makeup water supply valve to maintain the proper level in the cooling tower basin.

A radiation monitor with a high alarm is provided to monitor the service water blowdown flow for detection of potentially radioactive leakage into the SWS from the component cooling water heat exchangers. Provisions are also available for taking local fluid samples.

9.2.2 Component Cooling Water System

The component cooling water system is a non-safety-related, closed loop cooling system that transfers heat from various plant components to the service water system during normal phases of operation. It removes heat from various components needed for plant operation and removes core decay heat and sensible heat for normal reactor shutdown and cooldown.

The AP1000 component cooling water system provides a barrier to the release of radioactivity between the plant components being cooled that handle radioactive fluid and the environment. The component cooling water system also provides a barrier against leakage of service water into primary containment and reactor systems.

9.2.2.1 Design Bases

9.2.2.1.1 Safety Design Basis

Failure of the component cooling water system or its components will not affect the ability of safety-related systems to perform their intended safety functions. The component cooling water system serves no safety-related function except for containment isolation and therefore has no nuclear safety design basis except for containment isolation (see Subsection 6.2.3).

9.2.2.1.2 Power Generation Basis

The component cooling water system is designed to perform its operational functions in a reliable and failure tolerant manner. This reliability is achieved with the use of reliable and redundant equipment and with a simplified system design.

9.2.2.1.2.1 Normal Operation

The component cooling water system transfers heat from various plant components needed to support normal power operation with a single active component failure. The component cooling water system is designed for normal operation in accordance with the following criteria:

- The component cooling water supply temperature to plant components is not more than 100°F assuming a 100-year return estimate of 2-hour duration wet bulb temperature of 87.4°F for service water cooling (per Table 2.0-201).

  The most limiting component cooled by the CCS, the RCP motor cooling system, has been designed to operate for at least 6 hours continually with cooling water supplied at temperatures up to 100°F.

  The performance of the standard AP1000 CCS and SWS for single cooling water train, full power operation at a maximum safety wet bulb temperature of 87.4°F has demonstrated the highest CCS temperature achieved at these conditions is 97.4°F, for a period of less than 2 hours. As ambient wet bulb temperature decreases, the CCS temperature follows and will return to below 95°F with ambient wet bulb temperature slightly lower than 84°F, assuming nominal performance of both the CCS and SWS. Since the definition of the maximum normal wet bulb temperature value is the seasonal 1 percent exceedance value observed at the site, the annual total operating time for which CCS temperature could exceed 95°F is less than 30 hours per year, for periods of a few hours at most. The maximum CCS temperature of 97.4°F is bounded by the maximum allowable cooling water temperature for reactor coolant pumps (the most limiting component) and the increase in maximum safety wet bulb temperature is therefore acceptable on this basis.

- The minimum component cooling water supply temperature to plant components is 60°F.

- The component cooling water system provides sufficient surge capacity to accept 50 gallons per minute leakage into or out of the system for 30 minutes before any operator action is required.

9.2.2.1.2.2 Normal Plant Cooldown

The first phase of plant cooldown is accomplished by transferring heat from the reactor coolant system via the steam generators to the main steam systems.

The component cooling water system, in conjunction with the normal residual heat removal system removes both residual and sensible heat from the core and the reactor coolant system and reduces the temperature of the reactor coolant system during the second phase of cooldown.

The component cooling water system reduces the temperature of the reactor coolant system from 350°F at approximately 4 hours after reactor shutdown to 125°F within 96 hours after shutdown by providing cooling to the normal residual heat removal system heat exchangers. This cooldown time is based on operation of both component cooling water system mechanical trains (one pump and one heat exchanger each), and a service water system supply temperature to the component cooling water system heat exchangers resulting from a maximum normal ambient design wet bulb temperature as defined in Table 2.0-201 for service water cooling. In addition to the cooldown time requirements, other system design criteria during cooldown are:

- Operation is consistent with the established reactor coolant system cooldown rates while maintaining the component cooling water supply below 110°F.
- The system design prevents boiling in the component cooling water system during plant cooldown.
- A single failure of an active component during normal cooldown will not cause an increase in reactor coolant system temperature above 350°F. Such a single failure also will not cause the reactor coolant system to boil once the reactor vessel head has been removed and the refueling cavity flooded. The component cooling system continues to provide cooling water to the normal residual heat removal system throughout the shutdown after cooldown is complete.

9.2.2.1.2.3 Refueling

During fuel shuffling (partial core off-load) or a full core off-load, cooling water flow is provided to spent fuel pool heat exchangers to cool the spent fuel pool. For a full core off-load cooling water is also supplied to a normal residual heat removal heat exchanger as part of spent fuel pool cooling. The system design criteria during refueling are:

- System operation is with both component cooling water system mechanical trains available.
- The component cooling water system maintains the spent fuel pool water temperature below 120°F based on a maximum normal ambient design wet bulb temperature as defined in Table 2.0-201 for service water cooling.

9.2.2.1.3 Codes and Standards

The component cooling water system equipment applicable codes and standards are listed in Section 3.2. The containment penetrations, isolation valves, and the pipe between the isolation valves are Safety Class B. A small section of the containment supply and return lines just inside the innermost containment isolation valve is designated Safety Class C. This section of line contains the relief valves provided to protect the containment isolation valves from excess pressure buildup while being closed automatically to isolate a reactor coolant pump external heat exchanger tube leak. The remainder of the component cooling water system piping is designed to ANSI Standard B31.1.

9.2.2.2 System Description

The component cooling water system provides a reliable supply of cooling water to the various plant components listed in Table 9.2.2-2.

A simplified sketch of the component cooling water system is included as Figure 9.2.2-1. The details of the system are shown in the piping and instrumentation diagram for the component cooling water system which is included as Figure 9.2.2-2.

The component cooling water system is a closed loop cooling system that transfers heat from various plant components to the service water system cooling tower. It operates during normal phases of plant operation including power operation, normal cooldown, and refueling. The system includes two component cooling water pumps, two component cooling water heat exchangers, one component cooling water surge tank and associated valves, piping, and instrumentation.

The system components are arranged into two mechanical trains. Each train includes one component cooling water pump and one component cooling water heat exchanger. The two trains of equipment take suction from a single return header. The surge tank is connected to the return header. Each pump discharges directly to its respective heat exchanger. A bypass line around each heat exchanger containing a throttle valve prevents overcooling the component cooling water. The discharge of each heat exchanger is to the common supply header.

Component cooling water is distributed to the components by this single supply/return header. Components are grouped in branch lines according to plant arrangement, with one branch line cooling the components inside containment. Loads inside containment are automatically isolated in response to a safety injection signal, which also trips the reactor coolant pumps, and in response to a high bearing water temperature trip signal from one of the reactor coolant pumps. Individual components, except the reactor coolant pumps, can be isolated locally to permit maintenance while supplying the remaining components with cooling water.

The component cooling water surge tank accommodates thermal expansion and contraction. It also accommodates leakage into or out of the component cooling water system until the leak is isolated. Water makeup to the surge tank is provided automatically on a low surge tank level signal by the demineralized water transfer and storage system. A line routed from the pump discharge header to the surge tank includes a mixing tank to add chemicals into the system to inhibit corrosion.

9.2.2.3 Component Description

General descriptions of the component cooling water system components are provided below. The nominal equipment parameters for the component cooling water system components are contained in Table 9.2.2-1.

9.2.2.3.1 Component Cooling Water Pumps

The two component cooling water pumps are horizontal, centrifugal pumps. They have a coupled pump shaft driven by an ac powered induction motor. Each pump provides the flow required by its respective heat exchanger for removal of its heat load. The pumps are redundant for normal operation heat loads. Both pumps are required for the cooldown; however, an extended cooldown can be achieved with only one pump in operation. One pump can be out of service during normal plant operation.

These pumps are risk-significant and are included within the scope of D-RAP. See Table 17.4-1 for further information.

9.2.2.3.2 Component Cooling Water Heat Exchangers

Two component cooling water heat exchangers provide redundant cooling for normal operation heat loads. Both heat exchangers are required to achieve the design cooldown rate; however, an extended cooldown can be achieved with one heat exchanger in operation. Either heat exchanger can be aligned with either component cooling water pump allowing one heat exchanger to be out of service during normal plant operation.

The component cooling water heat exchangers are plate type heat exchangers. Component cooling water circulates through one side of the heat exchanger while service water circulates through the other side. Component cooling water in the heat exchanger is maintained at a higher pressure than the service water to prevent leakage of service water into the system.

9.2.2.3.3 Component Cooling Water Surge Tank

The component cooling water system has a single surge tank. The surge tank accommodates changes in component cooling water volume due to changes in operating temperature. During normal operation, the tank is designed to accommodate a 50 gallons per minute leakage into or out of the system for 30 minutes before any operator action is required. For abnormal operation, the surge tank vent line is sized to accommodate a double-ended tube rupture in the normal residual heat removal system (RNS) heat exchanger (i.e., 520 gpm) without exceeding the surge tank design pressure or allowing pressure to increase above CCS system design pressure at the highest pressure point in the system.

The tank is a cylindrical, vertical unit constructed of carbon steel.

9.2.2.3.4 Component Cooling Water System Valves

Most of the valves in the component cooling water system are manual valves used to isolate cooling flow from components for which cooling is not required in a given plant operating mode.

Three motor-operated isolation valves and a check valve provide containment isolation for the supply and return component cooling water system lines that penetrate the containment barrier. The motor-operated valves are normally open; however, they are closed upon receipt of a safety injection signal, or a high bearing water temperature reactor trip signal. They are controlled from the main control room and fail as-is.

An air-operated isolation valve is located in the component cooling water discharge line from each reactor coolant pump. These valves, which are normally open, can be closed by an operator from the MCR, following a flow deviation alarm. The alarm is produced when there are flow deviations detected simultaneously in the reactor coolant pump CCS cooling supply and return lines that are indicative of a leak from the pump external heat exchanger to the CCS. Closing these valves prevents radioactive reactor coolant flow through the component cooling water system.

Relief valves are provided in the cooling water outlet line from each reactor coolant pump. These valves are sized to protect the pump motor cooling jacket (design pressure 200 psig) and the component cooling water piping in the event of a tube rupture in the reactor coolant pump external heat exchanger. A relief valve in the cooling water outlet line from the letdown heat exchanger also protects the component cooling water piping in the event of a tube rupture in the heat exchanger. Small relief valves are included in the cooling water outlet line from the other components to relieve the volumetric expansion which occurs if the cooling water lines to the component are isolated and the water temperature rises. One relief valve is also provided in each Safety Class C section of piping, just inside the innermost containment isolation valves on the CCS 10-inch supply and return lines penetrating the containment barrier, to ensure protection of the containment isolation valves

from excess pressure while closing on a reactor coolant pump high bearing water temperature trip signal intended to isolate a potential external heat exchanger tube leak. In addition, these valves provide protection of containment isolation valves in the event of a letdown heat exchanger tube rupture.

Relief valves in the cooling water outlet lines from each normal residual heat exchanger also protect the RNS heat exchanger shell and component cooling water piping in the event of a tube leak that occurs while the heat exchanger is isolated from the CCS. These relief valves also provide thermal relief for an isolated RNS heat exchanger.

9.2.2.3.5 Piping Requirements

Component cooling water system piping is made of carbon steel. Piping joints and connections are welded, except where flanged connections are required as indicated on the component cooling water system piping and instrumentation diagram (Figure 9.2.2-2).

9.2.2.4 System Operation and Performance

9.2.2.4.1 Plant Startup

Plant startup is the operation that brings the reactor plant from a cold shutdown condition to no-load operating temperature and pressure, and subsequently to power operation.

Normally both component cooling water system mechanical trains are operating during this post refueling period. Both trains are aligned to provide cooling to the required components as shown in Table 9.2.2-2.

When plant heatup is initiated, the reactor coolant pumps are started, and residual heat removal from the core is discontinued by stopping the residual heat removal pumps. The letdown heat exchanger is placed on automatic temperature control to maintain a constant letdown temperature. Throughout the plant startup, cooling water flows and temperatures are monitored to verify that the values are within the required limits. Once startup activities are complete, one component cooling water pump and one heat exchanger are taken out of service.

9.2.2.4.2 Normal Operation

During normal plant operation, one component cooling water system mechanical train of equipment is operating. The operating train is aligned to provide component cooling for the loads identified in Table 9.2.2-2. The other train is aligned to automatically start in case of a failure of the operating component cooling water pump. Figure 9.2.2-1 shows the valve alignment for the component cooling water system during normal plant operation.

During normal operation, leakage from the component cooling water system is replaced by automatic actuation of a valve in the makeup line on low surge tank level.

Periodically, a sample of the component cooling water is taken by the plant operator to ascertain that water chemistry specifications are met. If necessary, appropriate chemicals are added via the chemical addition tank and mixing is achieved through a recirculation line from the pump discharge header, through the surge tank to the pump suction line.

9.2.2.4.3 Plant Shutdown

Plant shutdown is the operation that brings the reactor plant from power operation to refueling conditions. During plant shutdown operations, both component cooling water system mechanical

trains normally operate. The system is aligned to provide the cooling water flows to the appropriate equipment as shown on Table 9.2.2-2.

The initial phase of plant cooldown is the reactor coolant system cooldown and depressurization utilizing the steam generators and the main steam system. The second phase of plant cooldown is initiated by placing the normal residual heat removal system in service when the reactor coolant temperature and pressure have been reduced to 350°F and 400 to 450 psig, respectively (approximately 4 hours after reactor shutdown).

Prior to starting the residual heat removal pumps, the standby component cooling water pump and heat exchanger are placed in operation and component cooling water flow is initiated to the normal residual heat removal heat exchangers. Following this, the normal residual heat removal system can be placed into operation by properly aligning valves and starting a residual heat removal pump.

The component cooling water system, in conjunction with the normal residual heat removal system and service water system cools the reactor coolant system to 125°F within 96 hours after shutdown. During the cooldown period, the component cooling water inlet temperature to the various components does not exceed 110°F. Both component cooling water pumps and heat exchangers are required to meet the plant cooldown schedule. In the event of a failure of a component cooling water pump or heat exchanger, the cooldown time is extended.

9.2.2.4.4 Refueling

Both component cooling water system mechanical trains are in operation during refueling. The system is aligned to provide the required flow to the appropriate components as shown on Table 9.2.2-2.

For fuel shuffling (partial core off-load), cooling water flow is provided to both spent fuel pool heat exchangers to maintain the spent fuel pool water temperature below 120°F. With a full core off-load and 10 years accumulation of spent fuel in the pool, both spent fuel pool heat exchangers and one normal residual heat removal heat exchanger maintain the spent fuel pool water temperature below 120°F.

9.2.2.4.5 Abnormal Conditions

9.2.2.4.5.1 Failure of a Component Cooling Water Pump

If a component cooling water pump fails when one pump is in service, an alarm is actuated and the low header flow signal automatically initiates operation of the standby component cooling water pump. If a component cooling water pump fails during plant cooldown, the time to reach the cold shutdown condition is increased.

9.2.2.4.5.2 Leakage into the Component Cooling Water System from a High Pressure Source

Small leakage of reactor coolant into the component cooling water system is detected by a radiation monitor on the common pump suction header, by routine sampling, or by high level in the surge tank.

Flow sensors located in the cooling water inlet and outlet lines from each reactor coolant pump external heat exchanger also detect leakage from a heat exchanger tube into the component cooling water system. Simultaneous flow deviations in both the inlet and outlet lines will generate a flow deviation alarm; this alarm is indicative of leak conditions and would alert the operator to close the valve on the cooling water outlet line on each reactor coolant pump to prevent reactor coolant flow throughout the component cooling water system. Both the flow signals and the isolation valves are

nonsafety-related. If the valve on the reactor coolant pump cooling water outlet line is not closed, reactor coolant leakage from the pump can be retained inside containment by closing the safety-related component cooling water containment isolation valves. These containment isolation valves close automatically if the leak rate is sufficiently large to cause a high bearing water temperature reactor and pump trip signal to be generated by the protection and safety monitoring system (PMS). The containment isolation valves can also be closed manually by the operator after being alerted to a reactor coolant pump leak by alarms from component cooling water system instrumentation (surge tank level and/or radiation level in the CCS pump suction header) or from the flow instruments located on the inlet and outlet lines from the leaking reactor coolant pump external heat exchanger. Manual closure of one CCS outlet isolation valve will result in a high bearing water temperature trip of the plant if the affected reactor coolant pump continues to operate.

A safety injection signal results if sufficient reactor coolant system inventory is lost through the leak. This signal will trip the reactor coolant pumps and automatically close the component cooling water containment isolation valves to prevent reactor coolant leakage outside containment. Overpressure protection of the reactor coolant pump motor cooling jacket and the component cooling water piping subjected to the reactor coolant system pressure is provided by means of a relief valve on the cooling water outlet piping downstream of the reactor coolant pump external heat exchanger. Two additional relief valves, one on each CCS cooling water line penetrating the containment inside the innermost containment isolation valve, are provided to protect the containment isolation valves from overpressure while being closed to isolate a high-pressure leak in the CCS inside containment.

The operator is alerted to a large leak from the letdown heat exchanger by a high surge tank level or a high radiation alarm in the absence of a signal from one or both of the reactor coolant pump inlet or outlet flow sensors indicating reactor coolant leakage from a reactor coolant pump external heat exchanger to the component cooling water system. The operator can isolate the reactor coolant flow to the letdown heat exchanger from the main control room by closing the letdown flow isolation valve in the chemical and volume control system. Overpressure protection for the component cooling water system in the case of a letdown heat exchanger tube rupture is provided by a relief valve in the component cooling water system piping near the heat exchanger outlet.

During a normal plant cooldown a normal residual heat removal heat exchanger tube leak or rupture could result in reactor coolant leakage into the component cooling water system. A check of the local flow measurements in the normal residual heat removal heat exchanger cooling water outlet lines will indicate the leaking heat exchanger. High surge tank level and/or high radiation level in the CCS pump suction header would also confirm this condition. Reactor coolant flow to the faulty heat exchanger can be isolated by closing valves in the normal residual heat removal system. If the RNS heat exchanger is isolated from the remainder of the CCS, overpressure protection for the component cooling water system and RNS heat exchanger shell in the case of a normal residual heat exchanger tube rupture is provided by a relief valve in the component cooling water system piping near each heat exchanger outlet.

9.2.2.4.5.3 Leakage from the Component Cooling Water System

Excessive leakage from the component cooling water system causes the water level in the component cooling water surge tank to drop and a low level alarm to be actuated. Makeup water is added automatically to the component cooling water system as required. After the leak is identified by visual inspection or by a change in individual component cooling water flow rate, the affected cooling water circuit containing the leak is isolated from the component cooling water system.

9.2.2.4.5.4 Loss of Normal AC Power

The component cooling water pumps are automatically loaded on the standby diesel in the event of a loss of normal ac power. The component cooling water system therefore continues to provide cooling of required components if normal ac power is lost.

9.2.2.4.5.5 Fire Leading to MODE 5, Cold Shut Down

In the event of a loss of normal component cooling system function the Fire Protection System can provide the source of cooling water for a Normal Residual Heat Removal System (RNS) heat exchanger and a RNS pump. Normally closed isolation valves between the Fire Protection System and the Component Cooling Water System are manually opened. An additional valve is manually closed to prevent supply of cooling water to other heat exchangers which are not needed to provide cooling for the Reactor Coolant System. A drain valve on the component cooling water return header is opened and the Fire Protection System water is released after passing through the RNS heat exchanger. The flow rate of Fire Protection System water is controlled manually to conserve the supply.

9.2.2.5 Evaluation

The component cooling water system penetrates the containment boundary. The containment penetration lines are designed in accordance with the containment isolation criteria system specified in Subsection 6.2.3. The containment isolation valve design evaluation and effects of failures are also presented in Subsection 6.2.3.

The component cooling water system can remove the required heat load during a loss of normal ac power.

The acceptability of the design of the component cooling water system is based on specific General Design Criteria (GDCs) and regulatory guides. The design of the component cooling water system has been compared to the criteria set forth in Subsection 9.2.2, "Reactor Auxiliary Cooling Water System," Revision 3, of the NRC's Standard Review Plan. The specific General Design Criteria identified in the Standard Review Plan section are General Design Criteria 2, 4, 5, 44, 45 and 46. Additionally, Regulatory Guide 1.29 was reviewed to determine the degree of compliance of the AP1000 design with the criteria. Branch Technical Position ASB 3-1 and IEEE 279 were also reviewed as appropriate. The compliance of the component cooling water system design with the applicable General Design Criteria and regulatory guides is discussed in Section 3.1 and Subsection 1.9.1, respectively.

9.2.2.6 Inspection and Testing Requirements

9.2.2.6.1 Preoperational Inspection and Testing

Preoperational testing of the component cooling water system is performed to verify that the system is installed in accordance with plans and specifications. The system is hydrostatically tested and is also tested to verify that proper sequence of valve positions and pump starting occurs on the appropriate signals. The pumps are tested to verify performance and the required flows to the individual components are obtained by proper orifice installation and/or valve setting.

9.2.2.6.1.1 Pump Flow Capability Testing

Each component cooling water system pump will be tested during hot functional testing. The flow paths will be aligned for shutdown cooling by one train of component cooling water system components. The flow delivered to one normal residual heat removal system heat exchanger and

one spent fuel pool cooling system heat exchanger, as well as the total component cooling water system flow, will be measured by flow instruments at the normal residual heat removal system heat exchanger, spent fuel pool cooling system heat exchanger, and component cooling water system pump discharge header.

9.2.2.6.1.2 Heat Transfer Capability Analysis

An analysis will be performed on the component cooling water system heat exchangers during heat exchanger design. The analysis is to confirm that the product of the overall heat transfer coefficient and effective heat transfer area, UA, of each heat exchanger is equal to or greater than the minimum value shown in Table 9.2.2-1. This is the minimum value for the component cooling water system to meet its functional requirement of shutdown heat removal and spent fuel pool cooling.

9.2.2.6.2 Routine Testing and Inspection

During normal operation, the standby pump and heat exchanger are periodically tested for operability, or alternatively, placed in normal operation in place of the train which had been operating.

Component cooling water system supply and return containment isolation valves are routinely tested during refueling outages. Descriptions of the testing and inspection programs for these valves are provided in Subsections 3.9.6 and 6.2.3, and Section 6.6.

9.2.2.7 Instrumentation Requirements

Instruments are provided for monitoring system parameters. Essential system parameters are monitored in the main control room. Low flow in the discharge header automatically starts the backup component cooling water pump. A radiation monitor alarms in the main control room if reactor coolant leaks into the component cooling water system.

Level instrumentation on the surge tank provides both high- and low-level alarms in the main control room. Two redundant level channels are provided to reduce the likelihood of reactor trip caused by a single downscale failure of a surge tank level channel that could cause the operating component cooling water pump(s) to trip, thereby initiating loss of cooling flow to the reactor coolant pumps and other cooled components. Also, at a low-tank level, a valve in the makeup water line is automatically actuated by one of the two level channels to provide makeup flow from the demineralized water transfer and storage system into the component cooling water system.

Flow alarms in the main control room, produced by the two flow channels located on the CCS reactor coolant pump cooling water inlet and outlet lines, will alert the operator to a leak from the reactor coolant pump external heat exchanger into the component cooling water system. Signals generated by the PMS, in the event of a high bearing water temperature trip of the reactor, also close the CCS containment isolation valves to eliminate the possibility of reactor coolant from a faulted external heat exchanger tube discharging to portions of the CCS outside the containment.

Component cooling water flow instrumentation is provided in the outlet line from the remaining components as shown in Figure 9.2.2-2.

9.2.3 Demineralized Water Treatment System

The demineralized water treatment system (DTS) receives water from the raw water system (RWS), processes this water to remove ionic impurities, and provides demineralized water to the demineralized water transfer and storage system (DWS). The demineralized water transfer and storage system is described in Subsection 9.2.4.

9.2.3.1 Design Basis

9.2.3.1.1 Safety Design Basis

The demineralized water treatment system serves no safety-related function and therefore has no nuclear safety design basis.

9.2.3.1.2 Power Generation Design Basis

- The demineralized water treatment system provides makeup and fill water to the demineralized water storage tank.
- The capacity of the demineralized water treatment system is sufficient to supply the plant makeup demand during startup, shutdown, and power operation.
- The quality of the water produced by the demineralized water treatment system is in accordance with the guidelines specified in Table 9.2.3-1.

9.2.3.2 System Description

9.2.3.2.1 General Description

Component and equipment classification for the demineralized water treatment system is given in Section 3.2. The system consists of the following major components:

- Two reverse osmosis (RO) feed pumps
- Two 100-percent reverse osmosis units normally operating in series for primary demineralization
- One electrodeionization unit for secondary demineralization

9.2.3.2.2 Component Description

Cartridge Filter

Two 100-percent capacity, cartridge-type filters arranged in a parallel configuration are provided upstream of the reverse osmosis units. These filters remove particulate such as silt or pipe scale which can plug the reverse osmosis membranes. Normally one filter is in service with the other used as a standby.

Reverse Osmosis Feed Pumps

The design consists of one full-capacity, high-pressure centrifugal feed pump for each reverse osmosis unit. The pumps maintain the required flow and pressure through the reverse osmosis membranes as the membrane performance is affected by the water temperature.

Reverse Osmosis Unit

Each reverse osmosis unit consists of two stages or arrays of membranes. Each array contains thin film composite membranes enclosed in fiberglass reinforced plastic pressure vessels. The reverse osmosis membrane assembly is of modular construction and is capable of being expanded. The piping arrangement of the individual pressure vessels permits one or more rows of an array to be out of service, while the remainder of the array is in service.

Manual isolation valves are furnished on the product and feed lines of each array and the reject brine lines between arrays. Sample valves are furnished on product and brine streams from each pressure vessel.

PVC piping may be used in low pressure portions of the system. Corrosion-resistant low alloy steel is used in higher pressure portions of the system. A pressure sensor, located on the product manifold, protects the membranes from overpressurization by alarming and shutting down the reverse osmosis unit.

Cleaning connections are provided on each stage of the reverse osmosis equipment.

Electrodeionization Unit

Electrodeionization (EDI) is used for secondary demineralization and the removal of dissolved carbon dioxide gas. The electrodeionization unit consists of multiple component stacks. Each stack component contains cell pairs of stacked membranes. One cell pair consists of an ion-diluting flow (product) channel located between a cation and an anion membrane with an ion concentrating (brine) flow channel located alternately between the cell pairs. A DC potential is maintained across the electrode plates which are located on opposite ends of the stacked membranes. Ion exchange resin is contained within the product flow channel, acting as an ion selective medium in the electrodeionization process. Isolation valves are provided for each stack component to allow for maintenance of a stack without removing the electrodeionization unit from service.

The electrodeionization unit includes two centrifugal brine pumps which maintain a constant flow in the closed loop brine system and flushes the ionic impurities from the brine channels in the stacks.

9.2.3.2.3 System Operation

After receiving water from the raw water system, the filtered water is pumped to the demineralized water treatment system. The demineralized water treatment system is a water purification system consisting of filters, pumps, reverse osmosis units, an electrodeionization unit, and associated piping, valves, and instrumentation.

A pH adjustment chemical is added upstream of the cartridge filters to adjust the pH of the reverse osmosis influent. The pH is maintained within the operating range of the reverse osmosis membranes to inhibit scaling and corrosion.

A dilute antiscalant, which is chemically compatible with the pH adjustment chemical feed, is metered into the reverse osmosis influent water to increase the solubility of salts (that is, decrease scale formation on the membranes). Antiscalant feed rate is controlled by a signal to the metering pump based on the demineralized water flow. Antiscalant chemicals are considered toxic materials for industrial facilities. The impact of toxic materials on the plant main control room habitability is addressed in Section 6.4.

Both the pH adjustment chemical and antiscalant are injected into the demineralized water treatment process from the turbine island chemical feed system. Refer to Subsection 10.4.11 for a further discussion of the chemical feed system.

The reverse osmosis influent passes through the cartridge filter which removes any particulate carried over from the raw water system and provides mixing for the upstream chemical feed systems.

Primary demineralization is achieved by a two-pass reverse osmosis system which consists of two identical reverse osmosis units which normally operate in series. The influent to the reverse osmosis unit is pumped from the raw water system through the cartridge filters to the suction of the reverse osmosis feed pump. The feed pump moves the water through the first unit of reverse

osmosis membranes where approximately 90 percent of the ionic impurities are removed. The product water from the first unit flows to the suction of the feed pump associated with the second reverse osmosis unit. Approximately 90 percent of the remaining ionic impurities is removed by the second reverse osmosis unit. A level signal from the demineralized water storage tank controls the operation of the reverse osmosis feed pumps. The pumps are started when the tank level is low and continue to run until the tank is full and the pumps are stopped.

Each reverse osmosis unit has two stages or arrays of pressure vessels; the membranes are contained within the vessels. A section of an array can be isolated for cleaning and maintenance of the membranes with the reverse osmosis unit in service. The reject flow or brine from the first reverse osmosis unit is discharged to the waste water system. The brine flow from the second unit is recycled to the suction of the feed pump of the first unit to improve the fluid recovery rate of the reverse osmosis process.

One reverse osmosis unit can be out of service, without affecting the demineralized water treatment effluent water quality. Operation with only one reverse osmosis unit results in the electrodeionization unit operating at a higher ionic loading.

The product water from the second reverse osmosis unit flows to the electrodeionization system for secondary demineralization. The electrodeionization unit removes approximately 90 percent of the remaining ionic impurities and also chemically removes dissolved carbon dioxide gas. The water flows through the electrodeionization stacks where a DC voltage across the electrode plates attracts ions of opposite charge. The alternately stacked membranes allow the ions to penetrate the membrane only in one direction, thereby concentrating the ions in the brine flow channel. The resin serves as an ion selective medium to aid migration of the ions through the membranes. Regeneration of the resin is performed by the DC voltage potential across the stack. The brine feed pumps maintain flow through the closed loop brine system, flushing the concentrated ions from the stacks. Approximately 5 percent of the brine flow is blowdown, which is recycled to the suction of the second reverse osmosis unit feed pump. Makeup to the brine flow is provided from the influent to the electrodeionization unit. The brine makeup flow also provides a continuous flow to each stack for flushing deposits and crud from the electrode plates. The electrode waste is collected in the electrode waste drain tank and is normally recycled to the inlet of the first reverse osmosis feed pump. A degas blower draws ambient air through the waste drain tank to prevent the accumulation of hazardous gases in the tank.

After this water processing, demineralized water leaves the demineralized water treatment system and is supplied to the demineralized water storage tank. Refer to Subsection 9.2.4 for further discussion of the demineralized water transfer and storage system.

9.2.3.3 Safety Evaluation

The demineralized water treatment system has no safety-related function and therefore requires no nuclear safety evaluation.

There are no potential sources of radioactive contamination within the demineralized water treatment system. Backflow prevention is addressed in the demineralized water transfer and storage system, Subsection 9.2.4.

The effects of flooding due to demineralized water treatment system component failures are described in Section 3.4.

9.2.3.4 Tests and Inspections

The demineralized water treatment system is functionally tested under anticipated operating conditions prior to initial plant startup. This verifies that system components and controls function properly. Proper system performance and integrity during normal plant operation are verified by system operation and visual inspections.

9.2.3.5 Instrumentation Applications

Pressure and flow instrumentation is provided to monitor the operation of the reverse osmosis process. The reverse osmosis feed pump discharge pressure and the effluent flow from the reverse osmosis units provide indication and control for the primary demineralization process. A pH analyzer, located upstream of the reverse osmosis units, maintains the pH level in the water to the reverse osmosis units by adjusting the stroke of the chemical feed pumps. Flow is measured downstream of the RO units and a permissive signal is sent to the chemical feed pumps. Pressure, conductivity, and flow is measured at each interval of the water treatment process.

Tank level from the demineralized water storage tank controls the operation of the system feed pumps. This level indication is described in Subsection 9.2.4.

Parameters measured such as tank level indication, pressure differentials across filters, system and pump pressures, system flow, and water conductivity outputs are displayed to the data display and processing system.

9.2.4 Demineralized Water Transfer and Storage System

The demineralized water transfer and storage system receives water from the demineralized water treatment system, and provides a reservoir of demineralized water to supply the condensate storage tank and for distribution throughout the plant. Demineralized water is processed in the demineralized water transfer and storage system to remove dissolved oxygen. In addition to supplying water for makeup of systems which require pure water, the demineralized water is used to sluice spent radioactive resins from the ion exchange vessels in the chemical and volume control system (as described in Subsection 9.3.6), the spent fuel pool cooling system (as described in Subsection 9.1.3), and the liquid radwaste system (as described in Section 11.2) to the solid radwaste system.

The demineralized water treatment system is described in Subsection 9.2.3.

9.2.4.1 Design Basis

9.2.4.1.1 Safety Design Basis

The demineralized water transfer and storage system serves no safety-related function other than containment isolation, and therefore has no nuclear safety-related design basis except for containment isolation. See Subsection 6.2.3 for the containment isolation system.

9.2.4.1.2 Power Generation Design Basis

- The demineralized water transfer and storage system provides demineralized water through the demineralized water storage tank to fill the condensate storage tank and to meet required demands and usages of demineralized water in other plant systems.

- The demineralized water transfer pumps provide adequate capacity and head for the distribution of demineralized water.

- The demineralized water storage tank supplies a source of demineralized water to the chemical and volume control makeup pumps during startup and required boron dilution evolutions. The demineralized water transfer and storage system supplies the required amount of water to the chemical and volume control system for reactor water makeup.
- The oxygen content of water supplied to the demineralized water distribution system from the demineralized water storage tank is 100 ppb or less.
- Sufficient storage capacity is provided in the condensate storage tank to satisfy condenser makeup demand based on maximum steam generator blowdown operation during a plant startup duration.
- The condensate storage tank provides the water supply for the startup feedwater pumps during startup, hot standby, and shutdown conditions.
- The condensate storage tank provides a sufficient supply of water to the startup feedwater system to permit 8 hours of hot standby operation, followed by an orderly plant cooldown from normal operating temperature to conditions which permit operation of the normal residual heat removal system over a period of approximately 6 hours.
- The piping from the condensate storage tank to the startup feedwater pumps allows adequate net positive suction head (NPSH) at maximum tank water temperature and minimum water level.
- The condensate storage tank serves as a reservoir to supply or receive condensate as required by the condenser hotwell level control system.
- The oxygen content of water stored in the condensate storage tank is 100 ppb or less.

9.2.4.2 System Description

9.2.4.2.1 General Description

Component and equipment classification for the demineralized water transfer and storage system is given in Section 3.2.

9.2.4.2.2 Component Description

Demineralized Water Storage Tank

The demineralized water storage tank has a capacity of approximately 100,000 gallons. The tank is a vertical cylindrical tank constructed of stainless steel. The tank is provided with level and temperature instrumentation; level controls the operation of the demineralized water treatment system and sends a signal to the reverse osmosis feed pumps to start and stop, thus supplying water to the storage tank. Tank temperature is monitored and controls an immersion-type electric heater to keep the tank contents from freezing.

Demineralized Water Transfer Pump

Two motor-driven, centrifugal, horizontal pumps, located near the demineralized water storage tank, provide the plant demineralized water distribution system pressure and capacity. Each pump provides full flow recirculation through the catalytic oxygen reduction unit as well as providing the required system demand.

Catalytic Oxygen Reduction Units

Oxygen control of the demineralized water is performed by catalytic oxygen reduction units. Two catalytic oxygen reduction units are used in the AP1000 plant. One unit is provided for the demineralized water distribution system as water is pumped from the tank to the distribution system. The second unit is provided at the condensate storage tank to maintain a low oxygen content within the tank and is used in a recirculation path around the tank.

Each catalytic oxygen reduction unit consists of a mixing chamber, a catalytic resin vessel, and a resin trap. The mixing chamber is a stainless steel, in-line, static mixer where dissolution of the reducing agent occurs. Dissolved oxygen is removed chemically by mixing the effluent from the storage tank with hydrogen gas. Hydrogen is supplied from the plant gas system. The resin vessel is a rubber lined, carbon steel vessel containing catalytic resin. The stainless steel resin trap contains a cartridge filter to collect resin fines discharged from the resin vessel.

Condensate Storage Tank

The condensate storage tank has a capacity of 485,000 gallons and is a vertical cylindrical tank constructed of stainless steel. Level and temperature instrumentation are provided with the tank level controlled by the makeup valve. Freeze protection is supplied by immersion-type electric heaters.

9.2.4.3 System Operation

9.2.4.3.1 Normal Operation

The water level in the demineralized water storage tank controls the demineralized water treatment system. When the level in the demineralized water storage tank falls to a preset level, the pumps in the demineralized water treatment system start automatically. High water level in the tank stops operation of the demineralized water treatment system. This action, along with the capacitance in the tank, maintains the desired volume to supply the expected demands for demineralized water during normal plant operation.

The demineralized water transfer pumps, taking suction from the demineralized water storage tank, supply water through a catalytic oxygen reduction unit to the demineralized water distribution header. From this header, demineralized water is supplied to the condensate storage tank, is supplied as makeup to the chemical and volume control system pumps, and is distributed throughout the plant. The demineralized water distribution header pressure is maintained by the operation of one transfer pump. This pump recirculates water that exceeds system demand to the demineralized water storage tank. Controls are provided to automatically start the second pump upon failure of the first to maintain system pressure and demand. A low level alarm on the demineralized water storage tank signals the plant operator to isolate demands on the tank other than chemical and volume control system supply. Demineralized water is distributed to the containment, auxiliary, radwaste, annex, and turbine buildings for system usage.

The condensate storage tank level is maintained by a level control valve in the tank supply line. The valve opens when the water level in the tank drops to a specified level and closes when the level increases to a specified setpoint. When high oxygen levels exist in the condensate storage tank, an oxygen analyzer signal starts the catalytic oxygen reduction unit pump. The pump is shut off when low levels of oxygen are detected. Low oxygen demineralized water is circulated from the tank outlet connection, through the catalytic oxygen reduction unit, and is returned to the tank via the normal inlet supply line of the tank. An orifice controls the recirculation pressure and flow returning to the tank.

Changes in the condensate system inventory are controlled by the condenser hotwell level system. As level falls in the hotwell, makeup from the condensate storage tank is supplied to the hotwell by

the makeup control valve. As level rises in the hotwell, condensate is rejected to the condensate storage tank via the condensate pump's discharge control valve. Subsection 10.4.1 describes the function of the condenser hotwell level system.

In the event the main feedwater system is unavailable to supply water to the steam generators during startup, hot standby, or shutdown, the startup feedwater pumps may be activated and require water from the condensate storage tank. Subsection 10.4.9 describes the startup feedwater system function and operation.

Water supplied from the condensate storage tank to the auxiliary steam supply system is described in Subsection 10.4.10.

9.2.4.4 Safety Evaluation

The demineralized water transfer and storage system has no safety-related function other than for containment isolation (see Figure 9.2.4-1), and therefore requires no nuclear safety evaluation, other than containment isolation which is described in Subsection 6.2.3.

Failure of system components has no impact on safety-related systems, structures, or components. Flooding due to demineralized water transfer and storage system component failures which may affect safe shutdown equipment are described in Section 3.4.

The condensate storage tank normally contains no significant radioactive contaminants.

A check valve or atmospheric gap, in conjunction with a block valve or control valve, is used to prevent backflow of fluids from systems that interface with the demineralized water transfer and storage system. For interfacing systems that have a higher operating pressure than the demineralized water transfer and storage system and that normally do not require a supply of demineralized water during plant operations, a check valve with a normally closed block valve is used. For interfacing systems that have a higher operating pressure than the demineralized water transfer and storage system and that normally require demineralized water during plant operations, a check valve is used to prevent backflow into the demineralized water transfer and storage system. For interfacing systems with a lower operating pressure than the demineralized water transfer and storage system, system operating pressure prevents backflow into the demineralized water transfer and storage system; when the demineralized water transfer and storage system is shut down for maintenance, the check valve, closed block or control valve, or atmospheric gap is relied upon to prevent backflow into the demineralized water transfer and storage system.

9.2.4.5 Tests and Inspections

Proper system performance and integrity during normal plant operation are confirmed by system operation and visual inspections.

Grab samples may be taken from the demineralized water storage tank or the condensate storage tank to verify water chemistry is maintained within acceptable limits. Grab samples are taken to the secondary sampling laboratory for analysis. Water chemistry specifications for demineralized water supplied to the demineralized water transfer and storage system are described in Subsection 9.2.3.

9.2.4.6 Instrumentation Applications

Water level is measured and automatically controlled and alarmed in the demineralized water and condensate storage tanks.

Instrumentation is provided to control the recirculation and distribution of demineralized water from the storage tank through the pumps and to the supply header and condensate storage tank. Controls are provided for automatic starting of the demineralized water transfer and storage system pumps.

An oxygen analyzer signal starts and stops the condensate storage tank catalytic oxygen reduction unit pump on low and high oxygen levels.

Monitoring of instrumentation is performed through the data display and processing system. Control functions are performed by the plant control system. Appropriate alarms and displays are available in the control room. Local indication, display and manual control are available in portable displays which may be connected to the data display and processing system. See Chapter 7.

9.2.5 Potable Water System

9.2.5.1 Design Basis

The potable water system (PWS) is designed to furnish water for domestic use and human consumption. It complies with the following standards:

- Bacteriological and chemical quality requirements as referenced in EPA "National Primary Drinking Water Standards," 40 CFR Part 141.
- The distribution of water by the system is in compliance with 29 CFR 1910, Occupational Safety and Health Standards, Part 141.

9.2.5.1.1 Safety Design Basis

The potable water system penetrates the main control room envelope boundary. A safety related loop seal in the PWS piping that penetrates the main control room envelope boundary prevents in-leakage into the main control room envelope during VES operation.

9.2.5.1.2 Power Generation Design Basis

- Potable water is supplied to provide a quantity of 50 gallons/person/day for the largest number of persons expected to be at the station during a 24-hour period during normal plant power generation or outages.
- Water heaters provide a storage capacity equal to the probable hourly demand for potable hot water usage and provide hot water for the main lavatory, shower areas, and other locations where needed.
- A minimum pressure of 20 psig is maintained at the furthermost point in the distribution system.
- No interconnections exist between the potable water system and any potentially radioactive system or any system using water for purposes other than domestic water service.

9.2.5.2 System Description

9.2.5.2.1 General Description

Classification of components and equipment for the potable water system is given in Section 3.2.

The source of water for the potable water system is the Miami-Dade Water and Sewer Department (MDWASD) potable water supply. The potable water system consists of a distribution header around the power block, hot water storage heaters, and necessary interconnecting piping valves.

9.2.5.2.2 Component Description

Hot Water Heaters

Electric immersion heating elements located inside the potable water hot water tank are used to produce hot water. This hot water is routed to the shower and toilet areas and to other plumbing fixtures and equipment requiring domestic hot water service. Point of use, inline electric water heating elements are used to generate hot water for the main control room and the turbine building secondary sampling laboratory.

9.2.5.3 System Operation

The MDWASD potable water supply system provides filtered and disinfected water to the potable water distribution system.

The MDWASD potable water supply system maintains the required pressure throughout the potable water distribution system. The source of potable water meets the EPA drinking water standards. No biocide or other water treatment is required.

Potable water is supplied to areas that have the potential to be contaminated radioactively. Where this potential for contamination exists, the potable water system is protected by a reduced pressure zone type backflow prevention device.

No interconnections exist between the potable water system and any system using water for purposes other than domestic water service including any potentially radioactive system.

9.2.5.4 Safety Evaluation

The potable water system has no safety-related functions other than to prevent in-leakage into the main control room envelope during VES operation. A loop seal in the safety-related PWS piping that penetrates the main control room envelope boundary prevents in-leakage into the main control room envelope.

9.2.5.5 Tests and Inspections

The potable water system is hydrostatically tested for leak-tightness in accordance with the Uniform Plumbing Code. Inspection of the system is in compliance with the Uniform Plumbing Code or governing codes having jurisdiction. The system is then disinfected, flushed with potable water, and placed in service. The presence of residual chlorine can be confirmed through laboratory tests of samples at sampling points as required. Tests for microbiological and bacteria presence in potable water are conducted periodically.

9.2.5.6 Instrumentation Applications

Thermostats, high-temperature limit controls, and temperature indication are installed on the potable water system hot water tank. Thermostats and high-temperature limit controls are installed on the inline water heaters. Pressure regulators are employed in those parts of the distribution system where pressure restrictions are imposed.

9.2.6 Sanitary Drainage System

The sanitary drainage system (SDS) is designed to collect the site sanitary waste for treatment, dilution and discharge.

9.2.6.1 Design Basis

9.2.6.1.1 Safety Design Basis

The sanitary drainage system isolates the SDS vent penetration in the main control room boundary on High-2 particulate or iodine concentrations in the main control room air supply or on extended loss of ac power to support operation of the main control room emergency habitability system as described in Section 6.4. The SDS vent line that penetrates the main control room envelope is safety related and designed as seismic Category I to provide isolation of the main control room envelope from the surrounding areas and outside environment in the event of a design basis accident. An additional penetration from the SDS into the main control room envelope is maintained leak tight using a loop seal in the safety-related seismic Category I piping.

9.2.6.1.2 Power Generation Design Basis

The sanitary drainage system within the scope of the plant covered by Design Certification is designed to accommodate 25 gallons/person/day for up to 500 persons during a 24-hour period.

9.2.6.2 System Description

9.2.6.2.1 General Description

The sanitary drainage system collects sanitary waste from plant restrooms and locker room facilities in the turbine building, auxiliary building, and annex building, and carries this waste to the treatment plant where it is processed.

The sanitary drainage system does not service facilities in radiologically controlled areas (RCA).

Although this sanitary drainage system transports sanitary waste to the waste treatment plant, the waste treatment plant is site specific and is outside the scope of the standard AP1000 certification. This system description provides a conceptual basis for the site interface design. Sanitary waste is treated on the Units 6 & 7 plant area. The treatment facility has the capacity to treat the waste from Units 1 through 7. The liquid effluent from the sanitary treatment facility is pumped to the blowdown sump where it combines with other effluent streams.

9.2.6.2.2 Component Description

Isolation Valves

The main control room pressure boundary penetration includes isolation valves, interconnecting piping, and vent and test connections. The isolation valves are classified as Safety Class C (see Subsection 3.2.2.5 and Table 3.2-3) and seismic Category I. Their boundary isolation function will be tested in accordance with ASME N510 (Reference 3).

The main control room pressure boundary isolation valves have motor operators. The valves are designed to fail as is in the event of loss of electrical power. The valves are qualified to shut tight against control room pressure.

Trunk Line

The trunk line is the primary line that the sanitary drainage system piping connects into for transport of the sanitary drainage to the site treatment plant.

Branch Lines

Branch lines are the sanitary drainage lines that connect the restroom facilities to the trunk line.

Manholes

Manholes are required in the trunk line at the connection of the branch lines into the trunk line, at the change in direction of the trunk line, or at the change in slope or direction of the trunk line. Quantity and location are site specific.

Lift Stations

Lift stations are required in the trunk line when the uniform slope of the trunk line results in excessively deep and costly excavation. Quantity and location are site specific.

9.2.6.3 Safety Evaluation

The sanitary drainage system has no safety-related function other than main control room envelope isolation. Redundant safety-related isolation valves are provided in the vent line penetrating the main control room. Therefore, there are no single active failures that would prevent isolation of the main control room envelope.

There are no interconnections between this system and systems having the potential for containing radioactive material. Potentially radioactive drains are addressed in Subsection 9.3.5 dealing with the radioactive waste drain system.

9.2.6.4 Test and Inspection

The sanitary drainage system is tested by water or air and established to be watertight in accordance with the Uniform Plumbing Code Section 318. System inspection is performed in compliance with the Uniform Plumbing Code Section 318 or governing codes specific to the site.

9.2.6.5 Instrument Application

The instruments associated with this system are part of the waste treatment plant which is site specific. Sufficient instrumentation for operation is provided with the treatment plant.

9.2.7 Central Chilled Water System

The plant heating, ventilation, and air conditioning (HVAC) systems require chilled water as a cooling medium to satisfy the ambient air temperature requirements for the plant. The central chilled water system (VWS) supplies chilled water to the HVAC systems and is functional during reactor full-power and shutdown operation.

9.2.7.1 Design Basis

9.2.7.1.1 Safety Design Basis

The central chilled water system serves no safety-related function other than containment isolation, and therefore has no nuclear safety design basis except for containment isolation. See Subsection 6.2.3 for the containment isolation system.

9.2.7.1.2 Power Generation Design Basis

The central chilled water system provides chilled water to the cooling coils of the supply air handling units and unit coolers of the plant HVAC systems. It also supplies chilled water to the liquid radwaste system, gaseous radwaste system, secondary sampling system, and the temporary air supply units of the containment leak rate test system.

9.2.7.1.3 Codes and Standards

The central chilled water system is designed to the applicable codes and standards listed in Section 3.2.

9.2.7.2 System Description

9.2.7.2.1 General Description

The system consists of two closed loop subsystems: a high cooling capacity subsystem and a low cooling capacity subsystem. The high capacity subsystem is the primary system used to provide chilled water to the majority of plant HVAC systems and other plant equipment requiring chilled water cooling. The low capacity subsystem is dedicated to the nuclear island nonradioactive ventilation system and the makeup pump and normal residual heat removal pump compartment unit coolers. The low capacity subsystem is illustrated in Figure 9.2.7-1.

The high capacity subsystem consists of two 80-percent capacity chilled water pumps, two 20-percent capacity chilled water pumps, two 80-percent capacity water-cooled chillers, two 20-percent air-cooled chillers, a chemical feed tank, an expansion tank, and associated valves, piping, and instrumentation. The subsystem is arranged in two parallel mechanical trains with common supply and return headers. Each train includes one 20-percent capacity pump, one 80-percent capacity pump, one 20-percent capacity chiller, and one 80-percent capacity chiller. A cross-connection at the discharge of each pump allows for each to feed a given chiller of matching capacity.

The low capacity subsystem consists of two 100-percent capacity chilled water loops. Each loop consists of a chilled water pump, an air-cooled chiller, an expansion tank, and associated valves, piping, and instrumentation. The subsystem is arranged in two independent trains with separate supply and return headers. The subsystem is provided with a common chemical feed tank. The subsystem provides a reliable source of chilled water to the main control room (MCR) and control support area (CSA) HVAC subsystem, and the Class 1E electrical equipment room HVAC subsystem. This system configuration provides 100-percent redundancy during normal plant operation and following the loss of offsite power. The air-cooled chillers of the low capacity subsystem are located on the auxiliary building roof. The chilled water pumps and expansion tanks are located in the auxiliary building below the chillers.

9.2.7.2.2 Component Description

The general descriptions and summaries of the design requirements for the central chilled water system components are provided below. The piping inside and outside containment has a design pressure of 200 psig and a design temperature of 320°F. The key equipment parameters for the central chilled water system components are contained in Table 9.2.7-1.

Pumps

Six central chilled water system pumps are provided. These pumps are single-stage, horizontal, centrifugal pumps. These pumps have an integral pump motor shaft driven by an ac-powered induction motor. The central chilled water system pumps are constructed of cast iron and have

flanged suction and discharge nozzles. Each pump is sized to provide the maximum water flow required by its respective chiller unit for removal of its associated design heat load.

Two pumps associated with the low capacity subsystem are risk-significant and are included with the scope of D-RAP. See Table 17.4-1 for further information.

Water-Cooled Chillers

Two water cooled liquid chillers are provided. Each chiller unit consists of a compressor, condenser, evaporator, and associated piping and controls. Environmentally safe refrigerants will be used in these chillers.

Air-Cooled Chillers

Four air-cooled liquid chillers are provided. Each chiller unit consists of a compressor, condenser, evaporator, and associated piping and controls. Environmentally safe refrigerants will be used in these chillers.

Two air-cooled chillers associated with the low capacity subsystem are risk-significant and are included with the scope of D-RAP. See Table 17.4-1 for further information.

Expansion Tank

One open and two closed expansion tanks are provided to maintain the pressure above saturation. The high capacity subsystem uses an open expansion tank which is located sufficiently above the high point of the system and connected to the suction side of the pump. The low capacity subsystem uses nitrogen charged expansion tanks on the suction side of the chilled water pumps. The expansion tanks maintain a positive suction pressure for the pumps. The tanks are sized to accommodate the volume of water expansion providing a space into which the noncompressible liquid can expand or contract as the liquid undergoes volumetric changes with changes in temperature.

Chemical Feed Tank

The chemical feed tanks and the associated piping are used to add chemicals to each chilled water subsystem stream to maintain proper water quality. Antifreeze solution is added to the low capacity subsystem to prevent freezing during cold weather operation.

Valves

Isolation valves are provided upstream and downstream of each pump/chiller train. These valves are butterfly valves and are used to isolate a train of the subsystem for maintenance. An interlock is provided between the downstream isolation valve and the pump/chiller controls.

An isolation valve is provided in the line that cross-connects the pump discharge lines in the high capacity subsystem. This manual butterfly valve is normally closed and can be manually aligned to operate the standby chiller with the operating pump of either train.

An air-operated isolation valve and check valve are provided in the chilled water supply and two air-operated isolation valves are provided in the chilled water return line that penetrates containment. The air-operated containment isolation valves automatically close upon receipt of a containment isolation signal. This isolation signal can be bypassed by the MCR operator to be able to restore containment recirculation system cooling with the containment isolated.

Isolation valves are provided at the interconnection with the hot water heating system to provide hot water through the coils of the containment recirculation cooling system for heating during refueling, maintenance, and testing activities under cold weather conditions.

High capacity subsystem temperature control valves are located upstream of each cooling coil or group of coils, except for the containment recirculation cooling system coils. The containment recirculation cooling system coils are provided with temperature controlled modulating valves. These valves control chilled water flow to the containment recirculation cooling system coils, as needed, to maintain the temperature within the design conditions. The flow control valves fail open upon loss of control air or electrical power.

Low capacity subsystem three-way modulating temperature control valves are provided for each group of nuclear island nonradioactive ventilation system cooling coils. These valves bypass chilled water flow around the coils, as needed, to maintain the temperature within the design conditions.

9.2.7.2.3 Instrumentation Requirements

The chiller and pumps are operable from the plant control system. The following describes the instrumentation employed for monitoring the operation of the central chilled water system components.

- Compressor trip and malfunction alarm
- Pump trip alarm
- Flow indication and low-flow alarm
- Temperature indication and high-temperature alarm
- System low/high pressure alarm

A low pressure interlock is provided on the pump suction and a low-low flow interlock is provided on the pump discharge to protect the pumps. Level instrumentation measures expansion tank level and provides signals to low- and high-level alarms to the plant control system and to open and close the makeup supply valve.

9.2.7.2.4 System Operation

The central chilled water system operating modes are described below.

Normal Operation

The high capacity subsystem capacity is based on the maximum and minimum normal ambient design temperatures as defined in Chapter 2, Table 2.0-201. The high capacity subsystem operates during normal modes of plant operation, supplying chilled water to plant components at a normal temperature of 40°F. The capacity of the low capacity subsystem is based on the maximum safety ambient design temperatures as defined in Chapter 2, Table 2.0-201. The low capacity subsystem is designed to operate during all normal modes of operation, supplying chilled water to the nonradioactive ventilation system components at a normal temperature of 40°F. The low capacity system also supplies chilled water to the make-up pump and normal residual heat removal pump compartment unit coolers of the radiologically controlled area ventilation system. The low capacity subsystem uses anti-freeze solution in the chilled water loop to protect the chilled water from freezing. The increased heat load produced by operation at the higher Turkey Point Units 6 & 7 maximum safety ambient wet bulb temperature of 87.4°F can be accommodated within the available capacity margin of the chiller units, without impacting the VWS low capacity subsystem or supporting systems design or plant operation. Cooling coil design calculations indicate that during operation at the standard plant design temperatures (115°F dry bulb, 86.1°F wet bulb), the VBS air handling unit has cooling coil and system margin.

During normal operation of the high capacity subsystem, at least one pump and at least one chiller operate to supply chilled water to the following plant HVAC systems:

- Radiologically controlled area ventilation system (Subsection 9.4.3)

- Containment recirculation cooling system (Subsection 9.4.6)
- Containment air filtration system (Subsection 9.4.7)
- Health physics/control access area HVAC system (Subsection 9.4.11)
- Radwaste building ventilation system (Subsection 9.4.8)
- Annex/auxiliary building nonradioactive ventilation system (Subsection 9.4.2)
- In addition, they also supply chilled water to the liquid radwaste system (Section 11.2), the gaseous radwaste system (Section 11.3), the containment leak rate test system (Subsection 6.2.5) components, the portable and mobile radwaste system (Section 11.4) components, the secondary sampling system (Subsection 9.3.4) components, the electrical switchgear room, and the personnel work area air handling units of the turbine building ventilation system (Subsection 9.4.9).

In the event that either the pump or chiller of the operating train becomes inoperable, the standby train would be manually aligned to provide chilled water service.

During normal operation of the low capacity subsystem, one pump and one chiller operate to supply chilled water to the associated cooling coils of the nuclear island nonradioactive ventilation system and the makeup pump and normal residual heat removal pump compartment unit coolers of the radiologically controlled area ventilation system. One train provides chilled water to the A and D air handling unit of the Class 1E electrical equipment room HVAC subsystem, the A air handling unit of the main control room/control support area HVAC subsystem, and the A makeup pump and the A and B normal residual heat removal pump compartment unit coolers of the radiologically controlled area ventilation system. The other train provides chilled water to the B and C air handling unit of the Class 1E electrical equipment room HVAC subsystem, the B air handling unit of the main control room/control support area HVAC subsystem, the B makeup pump and the A and B normal residual heat removal pump compartment unit coolers of the radiologically controlled area ventilation system. In the event that one train of the low capacity subsystem is inoperable, the operator can align the standby train to provide cooling to the standby nuclear island nonradioactive ventilation system air handling units and the makeup pump and the normal residual heat removal pump compartment unit coolers of the radiologically controlled area ventilation system.

During plant shutdown in cold weather conditions, the supply and return piping to the containment recirculation cooling system cooling coils may be isolated to permit manual alignment of the hot water heating system to the containment.

The central chilled water system is designed to permit use of the chilled water piping inside containment to the containment recirculation air handling units for containment heating when the plant is shutdown during cold weather. Remote manual realignment to the heating mode, utilizing the hot water system and the same containment recirculation air handling unit coils as the cooling mode, is performed outside containment and the procedure is administratively controlled. During this mode of operation, the high capacity subsystem is functional to meet the demand of those remaining HVAC systems and other equipment requiring chilled water.

Abnormal Operation

The high cooling capacity subsystem piping penetrates the containment to supply chilled water to the containment recirculation system fan coil units. The containment isolation valves, located on the chilled water supply and return lines, close on receipt of containment isolation signals. A bypass mode with main control room indication is provided to restore the containment recirculation cooling

system cooling during containment isolation. The remainder of the chilled water system continues to operate normally following containment isolation provided that power is available.

The central chilled water system is designed to remain operable following a loss of offsite power by using standby onsite ac power.

The low capacity subsystem chillers, pumps, and other electrical components are connected to the plant standby diesel generator bus in accordance with the automatic electrical load sequencing. The low capacity subsystem is configured such that the operation is similar to that described above for normal operation. Following the loss of offsite power, one diesel generator and one train of the low capacity subsystem operate to supply chilled water to the associated cooling coils of the nuclear island nonradioactive ventilation system and the makeup pump and normal residual heat removal pump compartment unit coolers as shown in Table 9.2.7-1.

The high capacity subsystem chillers, pumps, and other electrical components are connected to the plant standby diesel generator bus in accordance with the optional electrical load sequencing and can be energized at the option of the operator for investment protection after evaluation of the diesel generator available capacity.

The high capacity subsystem can be used in conjunction with the containment recirculation cooling system to remove heat from the containment atmosphere following certain plant transients, if the systems are available.

9.2.7.3 Safety Evaluation

The central chilled water system has no safety-related function, other than containment isolation and therefore requires no nuclear safety evaluation, other than containment isolation which is described in Subsection 6.2.3.

The central chilled water system components located in safety-related areas of the plant are designed such that a failure in the system will not unacceptably impact the operation of safety-related components.

9.2.7.4 Inservice Inspection/Inservice Testing

The central chilled water piping circuits are hydrostatically tested and balanced to provide design flowrates and temperatures. Periodic inspections are performed to verify proper performance of system components. Specific test requirements and intervals are contained in the plant operating procedures.

9.2.8 Turbine Building Closed Cooling Water System

The turbine building closed cooling water system (TCS) provides chemically treated, demineralized cooling water for the removal of heat from nonsafety-related heat exchangers in the turbine building and rejects the heat to the circulating water system.

9.2.8.1 Design Basis

9.2.8.1.1 Safety Design Basis

The turbine building closed cooling water system has no safety-related function and therefore has no nuclear safety design basis.

9.2.8.1.2 Power Generation Design Basis

The turbine building closed cooling water system provides corrosion-inhibited, demineralized cooling water to the equipment shown in Table 9.2.8-1 during normal plant operation.

During power operation, the turbine building closed cooling water system provides a continuous supply of cooling water to turbine building equipment at a temperature of 105°F or less assuming a circulating water temperature of 100°F or less.

The cooling water is treated with a corrosion inhibitor and uses demineralized water for makeup. The system is equipped with a chemical addition tank to add chemicals to the system.

The heat sink for the turbine building closed cooling water system is the circulating water system. The heat is transferred to circulating water through plate type heat exchangers which are components of the turbine building closed cooling water system.

A surge tank is sized to accommodate thermal expansion and contraction of the fluid due to temperature changes in the system.

One of the turbine building closed cooling system pumps or heat exchangers may be unavailable for operation or isolated for maintenance without impairing the function of the system.

The turbine building closed cooling water pumps are provided ac power from the 6900V switchgear bus. The pumps are not required during a loss of normal ac power.

9.2.8.2 System Description

9.2.8.2.1 General Description

Classification of equipment and components is given in Section 3.2. The system consists of two 100-percent capacity pumps, three 50-percent capacity heat exchangers (connected in parallel), one surge tank, one chemical addition tank, and associated piping, valves, controls, and instrumentation. Heat is removed from the turbine building closed cooling water system by the circulating water system via the heat exchangers.

The pumps take suction from a single return header. Either of the two pumps can operate in conjunction with any two of the three heat exchangers. Discharge flows from the heat exchangers combine into a single supply header. Branch lines then distribute the cooling water to the various coolers in the turbine building. The flow rates to the individual coolers are controlled either by flow restricting orifices or by control valves, according to the requirements of the cooled systems. Individual coolers can be locally isolated, where required, to permit maintenance of the cooler while supplying the remaining components with cooling water. A bypass line with a manual valve is provided around the turbine building closed cooling water system heat exchangers to help avoid overcooling of components during startup/low-load conditions or cold weather operation.

The system is kept full of demineralized water by a surge tank which is located at the highest point in the system. The surge tank connects to the system return header upstream of the pumps. The surge tank accommodates thermal expansion and contraction of cooling water resulting from temperature changes in the system. It also accommodates minor leakage into or out of the system. Water makeup to the surge tank, for initial system filling or to accommodate leakage from the system, is provided by the demineralized water transfer and storage system. The surge tank is vented to the atmosphere.

A line from the pump discharge header back to the pump suction header contains valves and a chemical addition tank to facilitate mixing chemicals into the closed loop system to inhibit corrosion in piping and components.

A turbine building closed cooling water sample is periodically taken and analyzed to verify that water quality is maintained.

9.2.8.2.2 Component Description

Surge Tank

A surge tank accommodates changes in the cooling water volume due to changes in operating temperature. The tank also temporarily accommodates leakage into or out of the system. The tank is constructed of carbon steel.

Chemical Addition Tank

The chemical addition tank is constructed of carbon steel. The tank is normally isolated from the system and is provided with a hinged closure for addition of chemicals.

Pumps

Two pumps are provided. Either pump provides the pumping capacity for circulation of cooling water throughout the system. The pumps are single stage, horizontal, centrifugal pumps, are constructed of carbon steel, and have flanged suction and discharge nozzles. Each pump is driven by an ac powered induction motor.

Heat Exchangers

Three heat exchangers are arranged in a parallel configuration. Two of the heat exchangers are in use during normal power operation and turbine building closed cooling water flow divides between them.

The heat exchangers are plate type heat exchangers. Turbine building closed cooling water circulates through one side of the heat exchanger while circulating water flows through the other side. During system operation, the turbine building closed cooling water in the heat exchanger is maintained at a higher pressure than the circulating water so leakage of circulating water into the closed cooling water system does not occur. The heat exchangers are constructed of titanium plates with a carbon steel frame.

Valves

Manual isolation valves are provided upstream and downstream of each pump. The pump isolation valves are normally open but may be closed to isolate the non-operating pump and allow maintenance during system operation. Manual isolation valves are provided upstream and downstream of each turbine building closed cooling water heat exchanger. One heat exchanger is isolated from system flow during normal power operation. A manual bypass valve can be opened to bypass flow around the turbine building closed cooling water heat exchangers when necessary to avoid low cooling water supply temperatures.

Flow control valves are provided to restrict or shut off cooling water flow to those cooled components whose function could be impaired by overcooling. The flow control valves are air operated and fail open upon loss of control air or electrical power. An air operated valve is provided to control demineralized makeup water to the surge tank for system filling and for accommodating leakage from the system. The makeup valve fails closed upon loss of control air or electrical power.

A TCS heat exchanger can be taken out of service by closing the inlet isolation valve. Water chemistry in the isolated heat exchanger train is maintained by a continuous flow of circulating water through a small bypass valve around the inlet isolation valve.

Backwashable strainers are provided upstream of each TCS heat exchanger. They are actuated by a timer and have a backup starting sequence initiated by a high differential pressure across each individual strainer. The backwash can be manually activated.

Piping

System piping is made of carbon steel. Piping joints and connections are welded, except where flanged connections are used for accessibility and maintenance of components. Nonmetallic piping also may be used.

9.2.8.2.3 System Operation

The turbine building closed cooling water system operates during normal power operation. The system does not operate with a loss of normal ac power.

Startup

The turbine building closed cooling water system is placed in operation during the plant startup sequence after the circulating water system is in operation but prior to the operation of systems that require turbine building closed cooling water flow. The system is filled by the demineralized water transfer and storage system through a fill line to the surge tank. The system is placed in operation by starting one of the pumps.

Normal Operation

During normal operation, one turbine building closed cooling water system pump and two heat exchangers provide cooling to the components listed in Table 9.2.8-1. The other pump is on standby and aligned to start automatically upon low discharge header pressure.

During normal operation, leakage from the system will be replaced by makeup from the demineralized water transfer and storage system through the automatic makeup valve. Makeup can be controlled either manually or automatically upon reaching low level in the surge tank.

Shutdown

The system is taken out of service during plant shutdown when no longer needed by the components being cooled. The standby pump is taken out of automatic control, and the operating pump is stopped.

9.2.8.3 Safety Evaluation

The turbine building closed cooling water system has no safety-related function and therefore requires no nuclear safety evaluation.

9.2.8.4 Tests and Inspections

Pre-operational testing is described in Chapter 14. The performance, structural, and leaktight integrity of system components is demonstrated by operation of the system.

9.2.8.5 Instrument Applications

Parameters important to system operation are monitored in the main control room. Flow indication is provided for individual cooled components as well as for the total system flow.

Temperature indication is provided for locations upstream and downstream of the turbine building closed cooling water system heat exchangers. High temperature of the cooling water supply alarms in the main control room. Temperature test points are provided at locations to facilitate thermal performance testing.

Pressure indication is provided for the pump suction and discharge headers. Low pressure at the discharge header automatically starts the standby pump.

Level instrumentation on the surge tank provides level indication and both low- and high-level alarms in the main control room. On low tank level, a valve in the makeup water line automatically actuates to provide makeup flow from the demineralized water transfer and storage system.

9.2.9 Waste Water System

The waste water system collects and processes equipment and floor drains from nonradioactive building areas.

9.2.9.1 Design Basis

9.2.9.1.1 Safety Design Basis

The waste water system isolates the WWS drain line that penetrates the main control room boundary. The WWS drain lines that penetrate the main control room envelope are safety related and designed as seismic Category I to provide isolation of the main control room envelope from the surrounding areas and outside environment in the event of a design basis accident.

9.2.9.1.2 Power Generation Design Basis

The power generation design basis is:

- Remove oil and/or suspended solids from miscellaneous waste streams generated from the plant.
- Collect system flushing wastes during startup prior to treatment and discharge.
- Collect and process fluid drained from equipment or systems during maintenance or inspection activities.
- Direct nonradioactive equipment and floor drains which may contain oily waste to the building sumps and transfer their contents for proper waste disposal. The radioactive equipment and floor drain system is described in Subsection 9.3.5.

9.2.9.2 System Description

9.2.9.2.1 General Description

The waste water system is capable of handling the anticipated flow of waste water during normal plant operation and during plant outages. The classification of components and equipment is given in Section 3.2.

Wastes from the turbine building floor and equipment drains (which include laboratory and sampling sink drains, oil storage room drains, the main steam isolation valve compartment, auxiliary building penetration area and the auxiliary building HVAC room) are collected in the two turbine building sumps. Drainage from the diesel generator building sumps, the auxiliary building sump – north (a nonradioactive sump) and the annex building sump is also collected in the turbine building sumps. The turbine building sumps provide a temporary storage capacity and a controlled source of fluid flow to the oil separator. In the event radioactivity is present in the turbine building sumps, the waste water is diverted from the sumps to the liquid radwaste system (WLS) for processing and disposal. A radiation monitor located on the common discharge piping of the sump pumps provides an alarm upon detection of radioactivity in the waste water. The radiation monitor also trips the sump pumps on detection of radioactivity to isolate the contaminated waste water. Provisions are included for sampling the sumps.

The turbine building sump pumps route the waste water from either of the two sumps to the oil separator for removal of oily waste. The diesel fuel oil area sump pump also discharges waste water to the oil separator. A bypass line allows for the oil separator to be out of service for maintenance. The oil separator has a small reservoir for storage of the separated oily waste which flows by gravity to the waste oil storage tank. The waste oil storage tank provides temporary storage prior to removal by truck for offsite disposal.

The waste water from the oil separator flows by gravity to the waste water retention basin for settling of suspended solids and treatment, if required, prior to discharge.

Design and routing of the condenser waterbox drains is addressed in Subsection 10.4.5.2.2.

9.2.9.2.2 Component Description

Isolation Valve

The main control room pressure boundary penetration includes a normally closed isolation valve and interconnecting piping. The isolation valve is classified as Safety Class C (see Subsection 3.2.2.5 and Table 3.2-3) and seismic Category I. Their boundary isolation function will be tested in accordance with ASME N510 (Reference 3).

Turbine Building Sumps

The two sumps collect waste water from the floor and equipment drains, laboratory drains, sampling waste drains, and plant washdowns from the turbine building. Selected drains from both the annex and auxiliary buildings are also collected in these sumps.

Turbine Building Sump Pumps

Each sump has one pneumatic, double diaphragm pump which routes the waste water to the oil separator. Interconnecting piping between the suction of the sump pumps allows for either pump to transfer waste water from either or both sumps. The plant service air system provides the supply of air for operation of the pumps. Operation of the pump is automatic based on sump level with controls provided for manual operation.

Oil Separator

The oil separator has internal, vertical coalescing tubes for removal of oily waste and an oil holdup tank. Sampling provisions are included on the oil holdup tank to confirm that the oil does not require handling and disposal as a hazardous waste. A sampling connection is also provided at the discharge of the oil separator.

Waste Oil Storage Tank

Waste oil from the oil separator reservoir and other plant areas is stored in a waste oil storage tank. A sampling connection is provided on the tank to verify that the oil does not require handling and disposal as a hazardous material. A truck connection on the tank allows for removal of the waste oil from the tank for offsite disposal.

Waste Water Retention Basin

The wastewater retention basin, located west of the turbine building for each unit, is a lined basin with two compartments constructed such that its contents (dissolved or suspended), do not penetrate the liner and leach into the ground. Either of these compartments can receive waste streams for holdup or, if required, for treatment to meet specific environmental discharge requirements.

The configuration and size of the wastewater retention basin allows settling of solids larger than 10 microns which may be suspended in the wastewater stream.

Wastewater can be sampled before it is discharged from the wastewater retention basin.

Waste Water Sumps

Waste water collection sumps are provided for the auxiliary building, the diesel generator building, the annex building and the diesel fuel oil area. These collection sumps are drained by air operated pumps and the effluent from the sumps, except the effluent from the diesel fuel oil area, is directed to the turbine building sumps for processing and release. The effluent from the diesel fuel oil area is pumped directly to the oil separator.

Sump Pumps

The waste water sump pumps are pneumatic, double diaphragm pumps. The plant service air system provides the supply of air for operation of these pumps. Operation of the pumps is automatic based on sump level with controls provided for manual operation.

Basin Transfer Pumps

Two 100-percent capacity submersible type pumps, one per basin compartment, send the wastewater from the retention basin to the blowdown sump. Each pump is sized to meet the maximum expected influent flow to prevent overflow of the basin. In the event of oily waste leakage into the retention basin, a recirculation line is provided to recycle the oil/water waste from the basin to the oil separator in the turbine building. In the event of radioactive contamination, this same line can be used to send the contents of the basin to the liquid radwaste system (WLS). Controls are provided for automatic or manual operation of the pumps based on the level of the retention basin.

Blowdown Sump

The blowdown sump is a lined concrete structure common to Units 6 & 7 that receives wastewater from the wastewater retention basins of both units, circulating water system (CWS) blowdown from both units, and effluent from the sanitary treatment facility. The blowdown sump is located southeast of the units near the makeup water reservoir. In the absence of CWS blowdown, dilution flow can be supplied to the blowdown sump from the raw water system (reclaimed water or saltwater sources). The waste stream from the blowdown sump is pumped to the deep injection wells. The pumps, downstream piping, and injection wells are part of the deep well injection system (DIS) described in Subsection 9.2.12. The blowdown sump, injection pumping station and associated piping to the injection wells is sized with adequate capacity to accommodate the highest expected influent flow rate to the blowdown sump without overflowing of the sump.

9.2.9.3 Safety Evaluation

The waste water system has no safety-related function other than main control room envelope isolation. A normally closed safety-related isolation valve is provided in the drain line penetrating the main control room. The drain line is safety related up to the isolation valve to ensure that the main control room habitability pressure boundary is maintained.

9.2.9.4 Tests and Inspections

System performance and integrity during normal plant operation are verified by system operation and visual inspections.

9.2.9.5 Instrumentation Applications

Level instrumentation and associated pump controls on the turbine building sumps, the auxiliary building sump, the diesel generator building sumps, and the diesel fuel oil sump are provided to prevent overflow of these waste water collection points. High alarms indicate tank level where operator action is required.

Level instrumentation is provided at the wastewater retention basin and is used to control operation of the basin transfer pumps. High-level alarms indicate the basin level where operator action is required.

Level instrumentation is provided at the blowdown sump and is used to control operation of the pumps discharging to the deep injection wells. A high level alarm indicates the sump level where operator action is required.

A radiation monitor located on the turbine building sump common discharge piping initiates an alarm and trips the turbine building sump pumps when radioactivity above a preset high level point is detected in the waste stream.

9.2.10 Hot Water Heating System

The hot water heating system (VYS) supplies heated water to selected nonsafety-related air handling units and unit heaters in the plant during cold weather operation and to the containment recirculating fans coil units during cold weather plant outages.

9.2.10.1 Design Basis

9.2.10.1.1 Safety Design Basis

The hot water heating system serves no safety-related function and therefore has no nuclear safety design basis.

9.2.10.1.2 Power Generation Design Basis

- During normal plant operation, the hot water heating system maintains acceptable design ambient air temperatures in various areas throughout the AP1000.
- During plant outages in cold weather, the hot water heating system supplies hot water to the plant chilled water piping serving the containment building recirculation fan coil units to maintain acceptable ambient air temperatures inside containment.

9.2.10.2 System Description

9.2.10.2.1 General Description

Major components of the heating system include heat exchangers, pumps, a surge tank, and provisions for chemical feed. Component and equipment classification for the hot water heating system is given in Section 3.2. The hot water heating system consists of a heat transfer package for the production of hot water and a distribution system to the various HVAC systems and unit heaters. The hot water heating system is a nonsafety-related system.

During cold weather plant operation, the hot water heating system supplies hot water throughout the plant to protect equipment from freezing and for personnel comfort. During cold weather plant outages, the hot water heating system supplies hot water to the containment building recirculation fan coil units to maintain acceptable ambient air temperatures inside containment. During a loss of normal ac power, provisions are made to power the hot water heating system from the onsite diesel generators as an investment protection load. In this mode of operation, heating steam is supplied from the auxiliary steam supply system.

The hot water heating system, using a steam source from high-pressure turbine crossunder piping or the auxiliary boiler, extracts heat energy from the steam through a heat exchanger and transfers this energy to heat water. The heated water is pumped in a closed loop system to hot water coils in the air conditioning systems. Condensate from the heat exchanger is level controlled and drained to the main condenser or auxiliary boiler feedwater system.

Two 50-percent capacity system pumps take suction from the return main of the closed loop system, pump water through two 50-percent capacity system heat exchangers, and supply hot water to the heating system main header. To prevent flashing of the heated water into steam, the pump in combination with the system surge tank keeps the system pressure above saturation conditions. The surge tank uses both elevation and nitrogen overpressure to keep the minimum system pressure above saturation conditions at the pump suction. Demineralized water is supplied to the system for surge tank makeup.

During plant outages in cold weather, hot water flows to the containment building recirculation fan coil units to heat the containment atmosphere. The recirculation fan coil units, containment supply and return piping to these units, and the containment isolation valves are part of the central chilled water system as described in Subsection 9.2.7. During normal plant operation the hot water heating system is isolated from the containment recirculation fan coils.

The hot water heating system is a manually actuated system and may operate when the site ambient temperature is 73°F or below.

9.2.10.2.2 Component Description

Major component design data of the hot water heating system are listed in Table 9.2.10-1.

Heat Exchanger

Each heat exchanger is a horizontal, shell-and-tube type, with an integral drain cooler, and uses the heat of vaporization of low-pressure steam for the heating of water. The heat exchanger is located in the closed loop hot water heating system downstream of the system pumps in the turbine building. This heat exchanger provides heated water for selected air handling unit and unit heater hot water coils.

Pumps

Two pumps distribute hot water to the various HVAC and unit heater systems. They are motor driven centrifugal pumps.

Surge Tank

The surge tank maintains system pressure by allowing the water to expand when the water temperature increases and provides a volume to accept makeup water to the hot water heating system.

The tank is a carbon steel, welded, pressure vessel with nitrogen supply, tank recirculation, and instrument connections.

Chemical Feed Tank

The chemical feed tank provides a means of chemical mixing in the system. Addition of chemicals provides control of corrosion.

The tank is a vertical cylinder of carbon steel construction with a capacity of less than 150 gallons and a top hinged opening for introducing the chemicals and side connections for transporting water through the chemical mixing tank from the pump discharge or the demineralized water transfer and storage system supply.

9.2.10.2.3 System Operation

As the system is filled with demineralized water, samples are taken and the closed loop water chemistry adjusted with chemicals recirculated through the chemical mixing tank with the use of a single pump. A pump is started and steam is admitted to a hot water system heat exchanger and the system is gradually heated.

A condensate level is maintained in each system heat exchanger by throttling the heat exchanger discharge flow to the condenser. During a plant outage when extraction steam is shutdown and auxiliary steam is used from the auxiliary boiler, a manual block valve is opened to establish flow of condensate from each heat exchanger to the auxiliary steam supply system deaerator.

Hot water flowing to individual heating coils is controlled either by flow balancing fixed orifices or by temperature controlled solenoid valves, according to the requirements of the heating system. Area temperatures are controlled by cycling the fans in unit heaters, by use of integral face/bypass dampers in air handling units, or by thermostats controlling hot water solenoids in heating coils of HVAC ducts. Further detail of hot water heating of the individual unit heaters, air handling units, and duct heating coils is provided in Section 9.4. In the radwaste building, normally isolated hot water supply and return connections are provided for a mobile radwaste system.

9.2.10.3 Safety Evaluation

The hot water heating system has no safety-related function and therefore requires no nuclear safety evaluation.

The hot water heating system interfaces with only nonsafety-related systems. Hot water heating is used in the containment to keep piping and components from freezing during cold weather when the plant is not operating. A hot water heating system interface with the central chilled water system is outside containment and in nonsafety-related piping of the chilled water system. Piping is shared inside the containment between hot water heating and central chilled water. During normal plant operation, the hot water system is isolated from the central chilled water system and containment. Containment isolation by the central chilled water system is described in Subsection 6.2.3.

The effects of flooding on the safe shutdown capability of the plant are described in Section 3.4.

The temperature control range for areas serviced by the hot water heating system is described in Section 9.4 with the ventilation systems.

9.2.10.4 Tests and Inspections

The hot water heating piping circuits are hydrostatically tested and balanced to provide designed flowrates and temperatures. Active component performance is monitored by instrumentation on the system. System performance and integrity during normal plant operation are verified by system operation and visual inspections.

9.2.10.5 Instrument Applications

Instruments are provided for monitoring system parameters. Essential system parameters are monitored in the main control room.

Total system flow is monitored and displayed in the main control room. The system heat exchangers are level controlled with the instrument signals controlling the level control valve as well as sending level indication and low- and high-level alarms to the data system. Temperature measured downstream of the heat exchangers controls fluid flow to, and around, the heat exchangers and indicates the temperature of heated water being sent to the hot water heating coils. Also temperature is monitored in the system return main.

Pressure is measured in the pump suction and at the pump discharge.

Level instrumentation on the surge tank provides both high- and low-level alarms. At tank low-level, makeup is provided from the demineralized transfer and storage system. At a low-low-level point in the tank, a signal is sent to stop the hot water heating system pumps.

9.2.11 Raw Water System

The raw water system (RWS) provides makeup to the circulating water mechanical draft cooling tower basins, demineralized water treatment system, raw water storage tank, the fire protection system fire water storage tanks, and service water cooling tower basins.

9.2.11.1 Design Basis

9.2.11.1.1 Safety Design Basis

The RWS has no safety-related function and therefore has no nuclear safety design basis.

Failure of the RWS or its components does not affect the ability of safety-related systems to perform their intended function.

The RWS does not have the potential to be a flow path for radioactive fluids.

9.2.11.1.2 Power Generation Design Basis

9.2.11.1.2.1 Normal Operation

The RWS provides a continuous supply of makeup water from 3 separate sources to the following services: (Figure 9.2-201 shows which sources supply which services).

- Circulating water system fill and makeup (sources: reclaimed water and/or saltwater)
- SWS fill and makeup (source: potable water)
- Demineralized water treatment system feed (source: potable water)

In addition, the RWS performs the following functions (Figure 9.2-201 shows which sources supply which functions):

- Filling the fire protection system fire water storage tanks (source: potable water)
- Providing the water for miscellaneous plant uses such as strainer backwash and media filter backwashes (source: potable water)
- Providing dilution flow required for liquid radwaste discharge (sources: reclaimed water and/or saltwater)

9.2.11.1.2.2 Outage Mode Operation

During plant outages, the RWS provides water to the same services as during normal operation with the exception of circulating water system makeup.

9.2.11.2 System Description

9.2.11.2.1 General Description

The RWS is shown in Figure 9.2-201 (Sheets 1–3). Classification of components and equipment for the RWS is given in Section 3.2.

9.2.11.2.1.1 Reclaimed Water

One of the sources of makeup water for the circulating water system is reclaimed water supplied to the FPL reclaimed water treatment facility from the MDWASD. From the FPL reclaimed water treatment facility, the reclaimed water is stored in the makeup water reservoir before being pumped to the circulating water system cooling tower basins. This arrangement is shown on Figure 9.2-201, Sheet 1 of 3.

9.2.11.2.1.2 Saltwater

The other source available for makeup water to the circulating water system is saltwater supplied from substratum radial collector wells. These wells pump saltwater that recharges from the marine environment (Biscayne Bay). Saltwater is used when a sufficient quantity and/or quality of treated reclaimed water is unavailable. This arrangement is shown in Figure 9.2-201, Sheet 2 of 3.

9.2.11.2.1.3 Potable Water

The MDWASD potable water supply provides water to the raw water storage tank. The raw water storage tank provides makeup water for the service water cooling towers. Additionally, the raw water storage tank also provides water for the fire protection system, demineralized water treatment system and other miscellaneous users. This arrangement is shown on Figure 9.2-201, Sheet 3 of 3.

9.2.11.2.2 Component Description

9.2.11.2.2.1 Components Handling Reclaimed Water

FPL Reclaimed Water Treatment Facility

The FPL reclaimed water treatment facility is designed to remove constituents from the sewage wastewater treatment plant in order to use it in the circulating water system. The FPL reclaimed water treatment facility includes pumps, trickling filters, clarifiers, deep bed filters, and solids handling equipment to reduce the levels of iron, magnesium, oil and grease, total suspended solids, nutrients, and silica to usable levels for the circulating water system.

Makeup Water Reservoir

The makeup water reservoir is used to store cooling water from the FPL reclaimed water treatment facility to be used as makeup to the circulating water system.

Reclaimed Makeup Water Pumps

Three 50-percent reclaimed makeup water pumps per unit are provided to supply reclaimed water from the makeup water reservoir for the services and functions listed in Subsection 9.2.11.1.2. They are powered from the normal ac power system.

Piping

The piping is designed to accommodate transient effects that may be generated by normal starting and stopping of pumps, opening and closing of valves, or other normal operating events. Air release valves are provided in the reclaimed makeup water pump discharge piping to vent air on pump start.

Screens

Coarse and fine screens are installed on the inlet to each reclaimed makeup water pump to prevent debris in the makeup water reservoir from entering the pump bay.

9.2.11.2.2.2 Components Handling Saltwater

Radial Collector Wells

Saltwater is supplied by four radial collector wells for the two units. A radial collector well consists of a central reinforced concrete caisson extending below ground level. Screens extend from the caisson laterally below Biscayne Bay. The wells are designed and sited to induce recharge from Biscayne Bay.

Saltwater Makeup Pumps

Four 33 1/3-percent saltwater makeup pumps per unit are provided to supply saltwater for the services and functions listed in Subsection 9.2.11.1.2. Each pump discharge line has a motor-operated valve located between the pump discharge and the output header to permit isolation of the pump. Two pumps are provided in each of the four radial collector wells for the two units. The pumps are powered from the normal ac power system.

Piping and Valves

The piping is designed to accommodate transient effects that may be generated by normal starting and stopping of pumps, opening and closing of valves, or other normal operating events. Air release valves are provided in the saltwater makeup pump discharge piping to vent air on pump start. Motor-operated valves are provided to direct the flow as required.

9.2.11.2.2.3 Components Handling Potable Water

Raw Water Storage Tank

A raw water storage tank is provided for Units 6 & 7. This tank receives water from the MDWASD potable water supply. The tank includes features to prevent contamination of the potable water supply by the tank contents. Should the potable water supply to the storage tank be interrupted, the volume of water in the tank (a minimum of two million gallons) provides sufficient time to facilitate a temporary supply of water to the service water cooling tower basins from another onsite water source, such as water from the makeup water reservoir (MWR). The MWR has a capacity well in excess of that needed to support cooldown to cold shutdown conditions and maintain the station in Mode 5 for greater than 7 days.

Raw Water Ancillary Pumps

Two 100-percent raw water ancillary pumps per unit draw water from the raw water storage tank to supply the required flow for the services and functions listed in Subsection 9.2.11.1.2. They are powered from the normal ac power system. The raw water ancillary pumps can be manually loaded onto the standby diesel generators to provide makeup to the service water cooling tower basins, if necessary, following a loss of normal ac power.

Piping

The piping is designed to accommodate transient effects that may be generated by normal starting and stopping of pumps, opening and closing of valves, or other normal operating events. Air release valves are provided in the raw water ancillary pump discharge piping to vent air on pump start.

9.2.11.3 System Operation

The RWS operates during normal modes of operation, including startup, power operation, cooldown, shutdown, and refueling.

Reclaimed water from the MDWASD supplies makeup water for the circulating water system of Units 6 & 7. Saltwater, from radial collector wells, also provides makeup water to the cooling tower basins. The circulating water system is designed to accommodate 100-percent supply from reclaimed water, saltwater, or a combination of the two sources. The ratio of water supplied by the two makeup water sources varies based on the availability of reclaimed water from the MDWASD.

Makeup water for the service water system makeup is supplied by the MDWASD potable water supply to the raw water storage tank. This water is also the source for demineralized water, fire protection, and miscellaneous water users.

9.2.11.4 Safety Evaluation

The RWS has no safety-related function and therefore requires no nuclear safety evaluation.

The RWS does not have the potential to be a flow path for radioactive fluids. The RWS has no direct interconnection with any system that contains licensed radioactive fluids. The liquid radwaste effluent interface is at a point in the DIS that prevents the effluent from entering the RWS.

9.2.11.5 Tests and Inspections

Initial test requirements for the RWS are described in Subsection 14.2.9.4.24.

System performance and structural and pressure integrity of system components is demonstrated by operation of the system, monitoring of system parameters such as flow and pressure, and visual inspections.

9.2.11.6 Instrumentation Applications

Pressure indication, with low and high alarms, is provided on the discharges of the raw water pumps. A low discharge pressure signal automatically starts the designated standby pump. Pressure indication, alarms, and controls for pumps included in the FPL reclaimed water treatment facility ensure the required pressure and flow of the raw water supply from the FPL reclaimed water treatment facility.

Level instrumentation is provided at the raw water storage tank to allow the tank level to be monitored and to control the flow of the MDWASD supplied potable water to the tank. Abnormally high or low water levels in the tank will be alarmed in the control room.

Level instrumentation on the fire water tanks automatically opens the fill valve on low tank level and closes on high level.

Instrumentation requirements for makeup to the SWS and CWS cooling tower basins are described in Subsection 9.2.1 and Subsection 10.4.5, respectively.

9.2.12 Deep Well Injection System

The DIS provides underground disposal of plant wastewater, including CWS blowdown and liquid radwaste, into the Boulder Zone. The system consists of 12 deep injection wells, 6 dual-zone monitoring wells, piping, valving, pumps, and instrumentation for system operational monitoring.

Dilution of the liquid radwaste is initiated as the radwaste enters the DIS in the discharge stream from the blowdown sump. The content of the blowdown sump is a combination of waste streams largely comprised of reclaimed water or saltwater from circulating water system blowdown during plant operation or from the alternate dilution flow paths when circulating water system blowdown is not sufficient or available for dilution. The DIS is shown in Figure 9.2-203.

The alternate dilution flow, when using reclaimed water as the cooling water makeup source, is reclaimed water supplied from the makeup water reservoir. The makeup water reservoir is a concrete structure that contains between 275 and 300 million gallons of reclaimed water that is available for use as makeup for the cooling tower evaporative, drift, and blowdown losses and the alternate dilution flow to achieve a DCD-referenced nominal 12,000 gpm dilution flow. The reservoir contains approximately 5 days of makeup water to supply both units' cooling towers operating at full power.

9.2.12.1 Design Basis

9.2.12.1.1 Safety Design Basis

The DIS has no safety-related function and therefore has no nuclear safety design basis.

Failure of the DIS does not affect the ability of safety-related systems to perform their intended function. The DIS functions to dispose and confine plant wastewater in the Boulder Zone.

The DIS is a flow path for liquid radwaste and liquid nonradioactive waste discharge.

9.2.12.1.2 Power Generation Design Basis

9.2.12.1.2.1 Normal Operation

DIS operations maintain the required minimum dilution factor to control the concentrations of liquid radwaste discharges arising from the release of WLS monitor tank contents. The activity concentration of the radwaste portion of the effluent is controlled to 10 CFR Part 20, Appendix B, effluent concentration limits (ECLs) by specifying and maintaining flow rates at the blowdown sump discharge corresponding to at least the minimum dilution factor (DF). The required minimum DF is calculated and applied before the release of liquid radwaste (batch is the only release mode anticipated) to ensure the activity concentration of the mixture complies with 10 CFR Part 20, Appendix B, ECLs. Implementation of the liquid radwaste effluent control program is in accordance with the Turkey Point Units 6 & 7 Offsite Dose Calculation Manual (ODCM), an operational program identified in Table 13.4-201.

9.2.12.1.2.1.1 Reclaimed Water

The deep well injection flow rate when 100 percent reclaimed water is in use for cooling is nominally approximately 12,500 gallons per minute (gpm) (normal) and 13,000 gpm (maximum) for both units. The liquid radwaste component of this flow rate is 3 gpm (normal) and 150 gpm (maximum) for both units. Three deep injection wells are sufficient for reclaimed water—two active and one as a backup.

9.2.12.1.2.1.2 Saltwater

The deep well injection flow rate when 100 percent saltwater is in use for cooling is nominally approximately 58,000 gpm (normal) and 59,000 gpm (maximum) for both units. The liquid radwaste component of this flow rate is 3 gpm (nominal) and 150 gpm (maximum) for both units. Eleven deep injection wells are sufficient for saltwater—nine active and two as backup.

9.2.12.1.2.2 Outage Mode Operation

Refer to Subsection 9.2.12.1.2.1.

9.2.12.2 System Description

The following system and component descriptions are typical. The actual system and components may vary.

9.2.12.2.1 General Description

The proposed locations of the deep injection wells and dual zone monitoring wells are depicted in Figure 9.2-202. The liquid waste stream collection and disposal schematic is shown in Figure 9.2-203. Classification of components and equipment for the DIS is given in Section 3.2. The operation of the DIS is identical for both reclaimed and saltwater—only the number of deep injection wells used differs. Additional valving and system monitoring is required for the system when saltwater is used as a makeup water since more deep injection wells are required because of the higher flow rates.

9.2.12.2.2 Component Description

Deep Injection Wells

Each of the deep injection wells is constructed with concentric steel casings to isolate and protect groundwater from injected fluid. Each injection well is constructed with new and unused 64- (or greater), 54-, 44-, 34-, and 24-inch-outside-diameter steel casings designed to last for the life

expectancy of the well. The 64- (or greater), 54-, 44-, and 34-inch-diameter casings have a minimum wall thickness of 0.375 inches and conform to American Society for Testing and Material (ASTM) 139, Grade B specifications. The final 24-inch-diameter casing has a 0.5-inch wall thickness, is seamless, and conforms to American Petroleum Institute (API) 5L specifications or ASTM 153 specifications. The well casings are selected to provide protection against casing failure during cementing operations, protect against failure during operation of the well and subsequent pressure tests, and provide sufficient corrosion protection. The 54-, 44-, and 34-inch-diameter casings are encased in cement on both the outside and the inside of the casing to protect against exposure to groundwater. The outside of the 24-inch-diameter casing is encased in cement to protect against exposure to groundwater. A nominal 18-inch-diameter fiberglass reinforced plastic (FRP) injection tubing with a wall thickness of 0.76 inches is installed inside the 24-inch-diameter casing to protect the 24-inch-diameter casing from exposure to injected fluids and subsequent corrosion. The annular space between the 24-inch-diameter casing and the FRP injection tubing will be filled with a nonhazardous corrosion inhibitor and sealed at the base and top to create a pressure-tight annular space. Figure 9.2-204 depicts a typical deep injection well. This schematic is based on actual conditions observed at Deep Injection Well DIW-1.

Dual Zone Monitoring Wells

Each of the dual zone monitor wells is constructed with concentric steel casings and a final FRP casing. Each monitor well is constructed with new and unused 44-, 34-, 24-, 16-, and 6.625-inch-diameter casings/tubings designed to last for the life expectancy of the well. The 44-, 34-, and 24-inch-diameter casings are made of steel with a minimum wall thickness of 0.375 inches and conform to ASTM 139, Grade B specifications. The 16-inch-diameter casing is made of steel and has a 0.5-inch wall thickness, is seamless, and conforms to API 5L specifications or ASTM 153 specifications. The well casings are selected to provide protection against casing failure during cementing operations and provide sufficient corrosion protection for the life of the well. The 34- and 24-inch-diameter casings are encased in cement on both the outside and the inside of the casing to protect against exposure to groundwater. The outside of the 16-inch-diameter casing is encased in cement to protect against exposure to groundwater. A nominal 6.625-inch-diameter FRP casing with a wall thickness of 0.27 inches serves as the final casing of the well and is selected due to its corrosion resistance. Figure 9.2-205 depicts a typical dual zone monitoring well.

The typical sampling system and associated equipment used for the dual zone monitoring wells are described below. The upper monitor zone sampling system is equipped with a surface-mounted centrifugal pump and the pump for the lower monitoring zone sampling system is a submersible turbine pump installed inside the lower monitor zone casing via a drop pipe. The pumps are connected to purge piping and have a totalizing flowmeter on each purge piping line. The totalizing flowmeters allow measurement of the volume of water that has been purged from the monitoring zones for each sampling event. A separate purge piping line and totalizing flowmeter is used for each monitoring zone to ensure against comingling of monitoring zone fluids. The purge water holding tank is located near the dual-zone monitoring well or on the containment pad of one of its two associated injection wells. The purge piping is buried as it leaves the monitoring well containment pad and either leads to the existing cooling canal system where it is released or it leads to a purge water holding tank. The upper zone and lower zone purge lines flow into the holding tank when the monitoring zones are being purged in preparation for sample collection. The holding tank is equipped with a pump and water level regulating system to ensure that the holding tank capacity is not exceeded. A pump is used to pump water from the holding tank to one of the associated deep injection wells, where it is pumped down the injection well and into the injection zone. The purge piping for each monitor zone is also connected to a sample collection sink that is located either on the monitor well containment pad or on the containment pad of one of the associated injection wells.

Considering the large depth of confining strata present above the injection zone (approximately 985 feet for DIW-1), it is highly unlikely that plant-derived radioactive contamination would be found in water produced in either monitor zone of the dual-zone monitor well. However, if plant-derived

radioactive contamination is detected, the affected water will be pumped to a purge water holding tank and then pumped down one of the injection wells.

Piping

Piping from the blowdown sump dilution connection point is routed to the deep injection wells and distributed in two branches; one branch is oriented in a north-south direction and located to the east of Unit 6. The second branch is oriented in the east-west direction and located to the south of Units 6 & 7.

The injectate piping connecting the pump station to the deep injection wells consists of a main line from the pump station that passes near each injection well and injectate feeder lines that connect the main line to each deep injection well. The piping is constructed of steel. The pipe diameter closest to the blowdown sump is approximately 60 inches in diameter and the pipe diameter at the last well in a branch is approximately 24 inches in diameter.

Valves

There are multiple valves on each deep injection well. This valving consists of an 18-inch-diameter gate valve located on the wellhead approximately 3 feet above where the injection well exits the ground, and an 18-inch-diameter butterfly valve located on the horizontal run of surface pipe on the concrete well pad. Air/vacuum release valves are provided at the appropriate location on each branch of the blowdown sump discharge piping.

The air/vacuum release valves are designed for the specific application and the level of service expected during operation. The injection lines on the operating wells remain full of water during operation, minimizing the number of times the valves are required to change position. Operating procedures provide the appropriate instructions to ensure actions are implemented correctly to limit or avoid pressure surges in the system. The valves are included in the preventive maintenance program to ensure the valves are checked periodically and maintained within acceptable parameters.

Redundant isolation valves are installed on the injectate main line to allow isolation of the main line in case of damage or failure to this line. Each injectate feeder line is equipped with redundant isolation valves where the injectate feeder lines connect to the main line to allow for the isolation of each individual injectate feeder line. Electronic remotely operated valves will isolate deep injection wells.

Vent valves are installed at required locations on each branch line. Vent valves are included to remove air either coming out of solution or air introduced by the air/vacuum release valves in the event that air is not swept out of the line during system startup. During normal operation, the vent lines are capped and the vent valves locked closed to prevent inadvertent operation. The vents are manually operated as needed for pump startup.

9.2.12.3 System Operation

The DIS operates during normal modes of operation, including startup, power operation, cooldown, shutdown, and refueling.

Dilution water is available during all modes of plant operation to maintain a minimum 6000 gpm dilution rate for each unit discharging liquid radwaste. The DIS is designed to accommodate the blowdown sump discharge flow rates for either source of CWS makeup water—reclaimed water or saltwater. The blowdown flow rate is determined by the number of deep injection wells used.

9.2.12.4 Safety Evaluation

The DIS has no safety-related function and therefore requires no nuclear safety evaluation.

The deep well injection system is the flow path for liquid radwaste discharges. Valving is provided to prevent or minimize the potential for radioactive fluid release to the environment due to damage to the above grade piping or operational issues with the deep injection wells. Section 11.2 describes the potential releases to the environment and includes the evaluation of these postulated releases.

9.2.12.5 Tests and Inspections

Initial test requirements for the DIS are described in Subsection 14.2.9.4.28.

System performance and structural and pressure integrity of system components is demonstrated by operation of the system, monitoring of system parameters such as flow and pressure, and visual inspections.

9.2.12.6 Instrumentation Applications

Continuous injection rate and injection pressure monitoring is performed at each deep injection well in service. Continuous monitoring of the water level of both monitor zones of the dual zone monitor wells is also performed. The data is transmitted to each control room where it is continuously monitored.

Radiological and chemical monitoring is also performed at each operational deep injection well and dual zone monitor well to assess system performance and to monitor confinement in the subsurface. Sections 11.2 and 11.5 describe the radiation monitoring controls governing the discharge to the deep well injection system.

9.2.13 Combined License Information

9.2.13.1 Potable Water

The potable water system outside of the power block is addressed in Subsections 9.2.5.2.1 and 9.2.5.3.

9.2.13.2 Wastewater Retention Basins

The plant waste water retention basins and associated discharge piping and retention basins are addressed in Subsections 9.2.9.2.2, and 9.2.9.5.

9.2.14 References

1. ASME Code, Section IV, Pt. HWL, 1998.

2. Uniform Plumbing Code, Section 318, 2000.

Table 9.2.1-1
Nominal Service Water Flows and Heat Loads at Different Operating Modes

	CCS Pumps and Heat Exchangers	SWS Pumps and Cooling Tower Cells (Number Normally is Service)	Flow (gpm)	Heat Transferred (Btu/hr)
Normal Operation (Full Load)	1	1	10,500	$103x10^6$
Cooldown	2	2	21,000	$346x10^6$ ($173x10^6$ per cell)
Refueling (Full Core Offload)	1	1	10,500	$74.9x10^6$
Plant Startup	2	2	21,000	$75.8x10^6$
Minimum to Support Shutdown Cooling and Spent Fuel Cooling	1	1	10,000	$170x10^6$

Table 9.2.2-1
Nominal Component Data - Component Cooling Water System

CCS Pumps (all data is per pump)	
Quantity	2
Type	Horizontal centrifugal
Minimum capacity (gpm, each) to support shutdown cooling and spent fuel pool cooling	8300
Design capacity (gpm, each)	9500
Design total differential head (ft)	250
Minimum flow rate to support shutdown cooling (gpm)	2685
Minimum flow rate to support spent fuel cooling (gpm)	1200
CCS Heat Exchangers (all data is per exchanger)	
Quantity	2
Type	Plate
Design duty end of cooldown (MBtu/hr)	44.1
Minimum UA (MBtu/hr/°F) to support shutdown cooling and spent fuel pool cooling	14.0
Design UA (MBtu/hr/°F)	15.5
CCS side Design flow rate (gpm)	9629
Service water side Design flow rate (gpm)	10,500
Plate material	Austenitic stainless steel
Seismic design	Non-seismic

Table 9.2.2-2
Plant Components Cooled by Component Cooling Water System

Component	System
RCP 1A	RCS
RCP 1B	RCS
RCP 2A	RCS
RCP 2B	RCS
RCP 1A Variable Frequency Drive	RCS
RCP 1B Variable Frequency Drive	RCS
RCP 2A Variable Frequency Drive	RCS
RCP 2B Variable Frequency Drive	RCS
Letdown HX	CVCS
RCDT HX	WLS
RHR HX	RNS
RHR HX	RNS
RHR Pump A	RNS
RHR Pump B	RNS
SFP HX A	SFS
SFP HX B	SFS
Chiller A	VWS
Chiller B	VWS
Sample HX	PSS
Miniflow HX	CVS
Miniflow HX	CVS
Air Compressor A	CAS
Air Compressor B	CAS
Air Compressor C	CAS
Air Compressor D	CAS
Cond Pump A Oil Cooler	CDS
Cond Pump B Oil Cooler	CDS
Cond Pump C Oil Cooler	CDS

Table 9.2.3-1
Guidelines for Demineralized Water
(Measured at the Outlet of the Demineralized Water Treatment System)

Parameters	Normal Value	Initiate Action
Specific conductivity, μS/cm at 77°F	≤ 0.1	≤ 0.2
Active silica, ppb	≤ 10	≤ 20
Total silica, ppb	≤ 50	
Suspended solids, ppb	≤ 50	
Aluminum, ppb	≤ 20	
Calcium, ppb	≤ 5	
Magnesium, ppb	≤ 5	
Chloride, ppb	≤ 1	
Sulfate, ppb	≤ 1	
Total organic carbon, ppb	≤ 100	

Table 9.2.7-1
Component Data - Central Chilled Water System
(Nominal Values)

High Capacity Subsystem	
Water Cooled Chillers	
Capacity (nominal tons)	1700
Compressor type	Centrifugal
Maximum power input (kW)	1700
Entering water temperature (°F)	56
Leaving water temperature (°F)	40
Cooling water flowrate (gpm)	3500 (max)
Air-Cooled Chillers	
Capacity (nominal tons)	400
Compressor type	Reciprocating, Screw
Maximum power input (kW)	500
Entering water temperature (°F)	56
Leaving water temperature (°F)	40
Low Capacity Subsystem	
Air-Cooled Chillers	
Capacity (nominal tons)	300
Compressor type	Reciprocating, Screw
Maximum power input (kW)	375
Entering water temperature (°F)	56
Leaving water temperature (°F)	40
Coil	**Flow (gpm)**
VBS MY C01 A/B	138
VBS MY C02 A/C	108
VBS MY C02 B/D	84
VAS MY C07 A/B	24
VAS MY C12 A/B	15
VAS MY C06 A/B	15

Table 9.2.8-1
Turbine Building Closed Cooling Water System
Equipment Load List

Component
Main turbine lube oil coolers
Main feedwater pump lube oil coolers
Generator hydrogen coolers
Generator stator cooling water cooler
Isolated phase bus coolers
MSR drain pump
EH control coolers
Secondary sampling system coolers

Table 9.2.10-1
Hot Water Heating System Design Data
(Nominal Values)

Available Steam Supply	
High pressure turbine extraction	
Pressure (psia)	170
Enthalpy (Btu/lbm)	1087
Temperature (°F)	368
Auxiliary steam	
Pressure (psia)	210
Enthalpy (Btu/lbm)	1199
Temperature (°F)	386
Heat Exchanger	
Quantity	2
Type	Shell and Tube – subcooled
Capacity (Btu/hr)	12,000,000

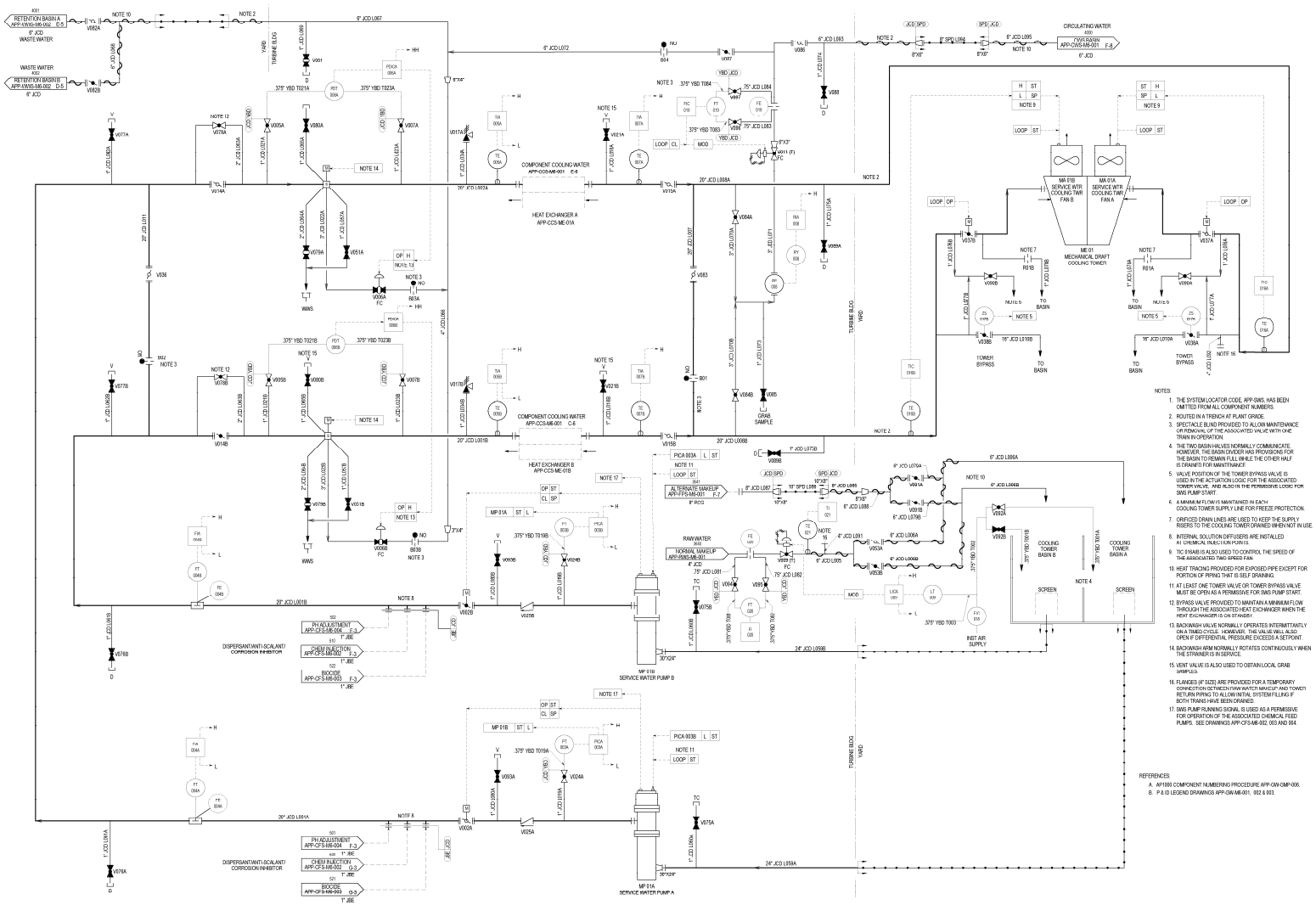

Figure represents system functional arrangement. Details internal to the system may differ as a result of implementation factors such as vendor-specific component requirements.

Figure 9.2.1-1
Service Water System
Piping and Instrumentation Diagram
(REF) SWS001

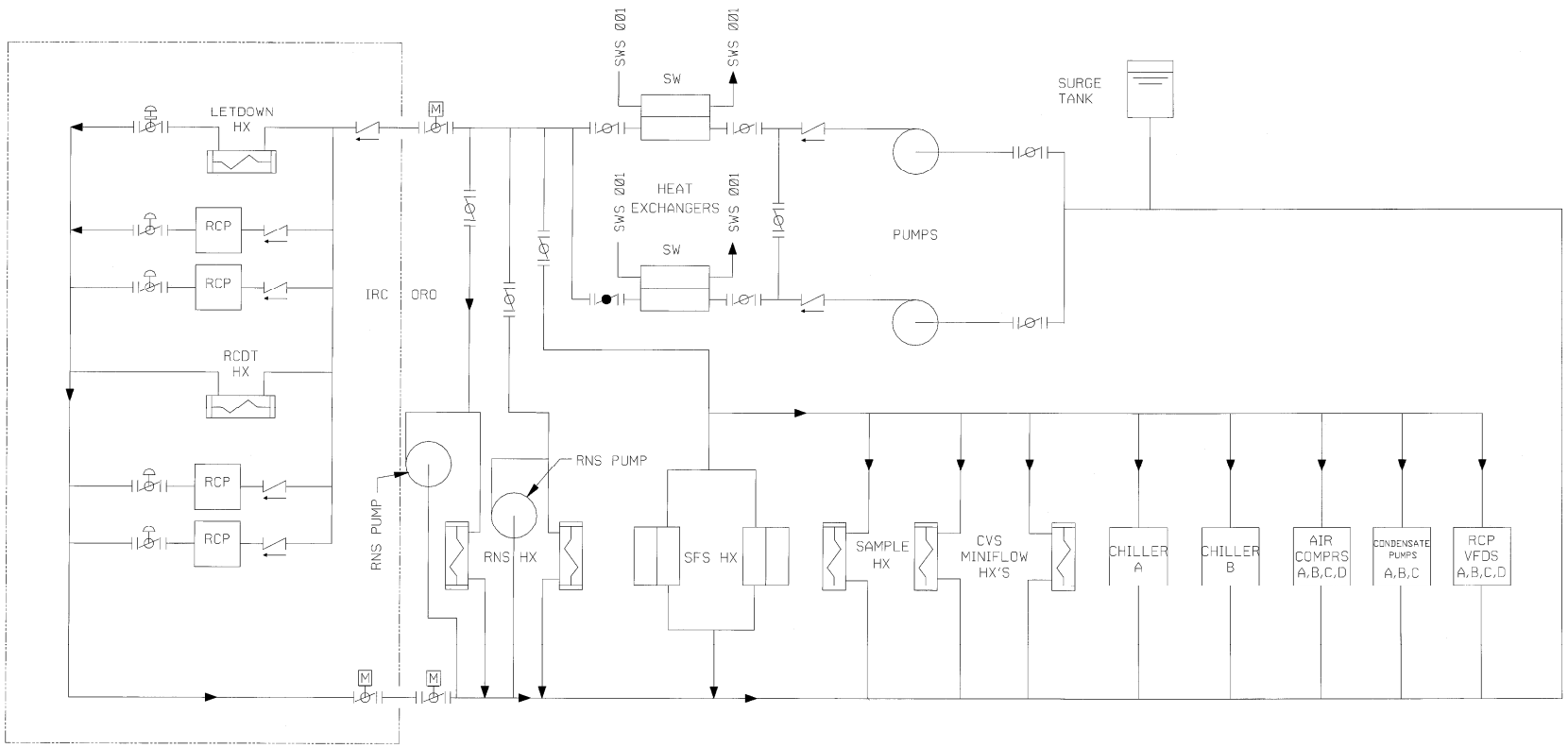

Figure 9.2.2-1
Component Cooling Water System
Simplified Flow Diagram
(REF) CCS

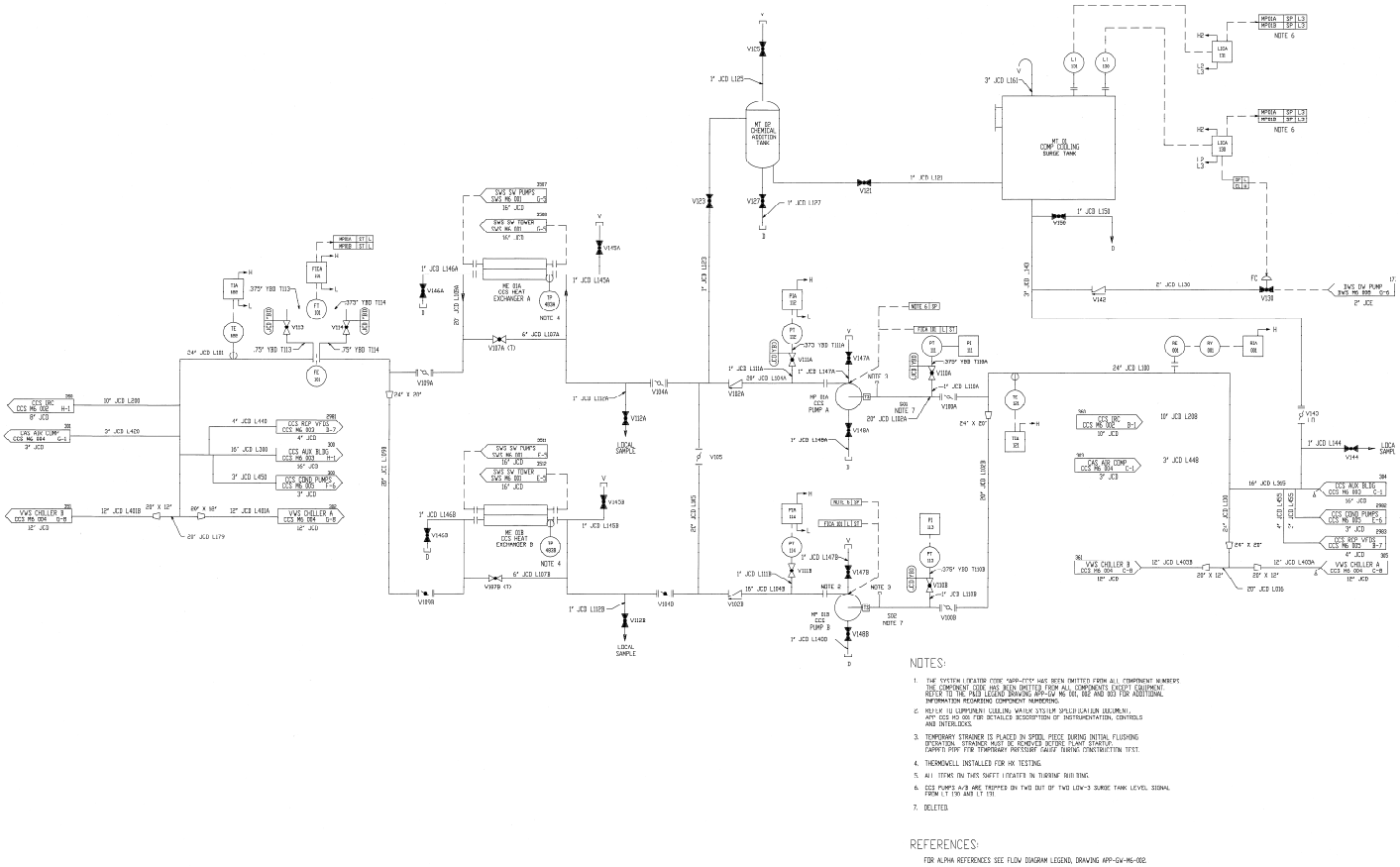

Figure represents system functional arrangement. Details internal to the system may differ as a result of implementation factors such as vendor-specific component requirements.

Inside Turbine Building

Figure 9.2.2-2 (Sheet 1 of 5)
Component Cooling Water System
Piping and Instrumentation Diagram
(REF CCS 001)

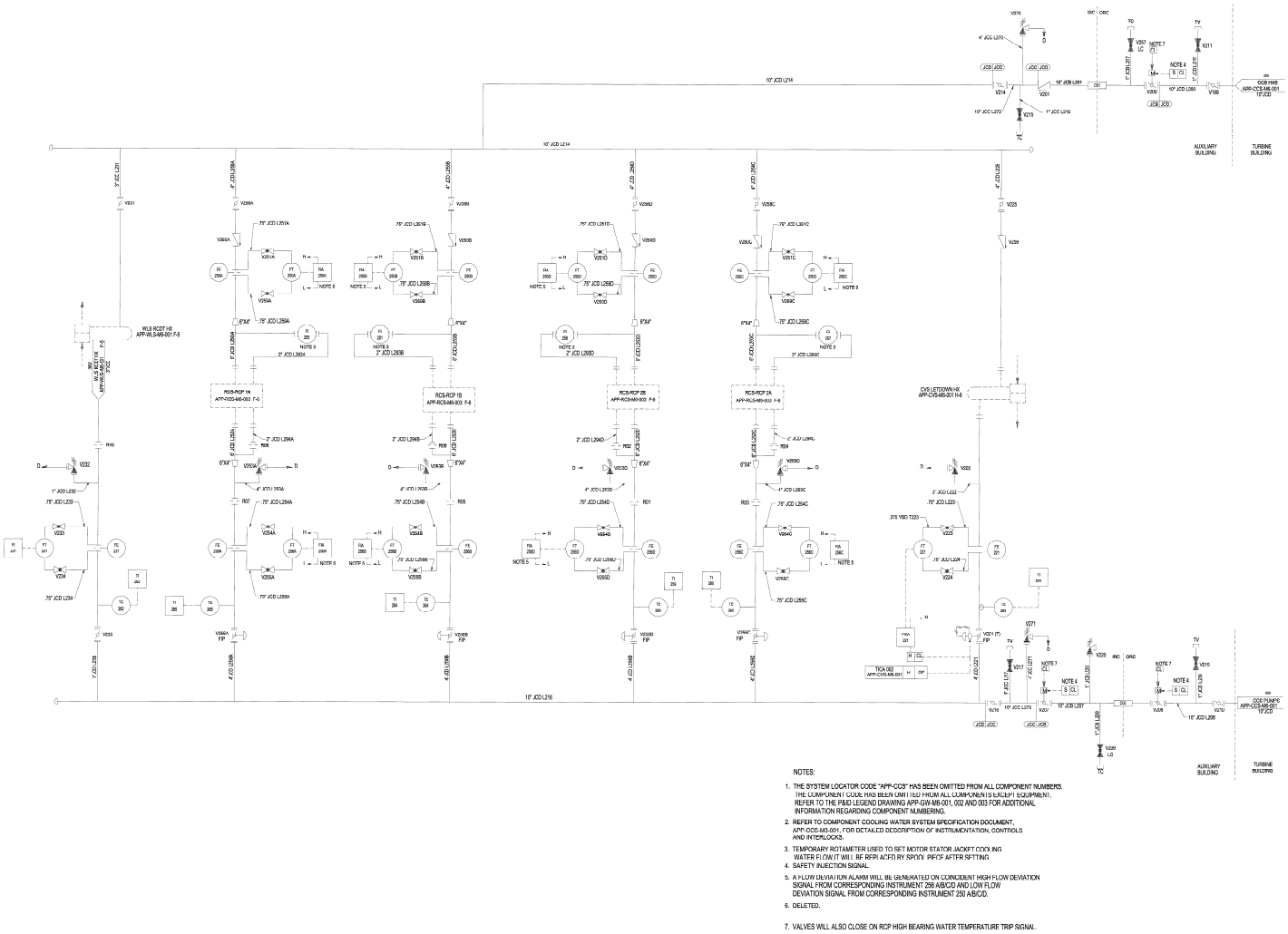

Figure represents system functional arrangement. Details internal to the system may differ as a result of implementation factors such as vendor-specific component requirements

Figure 9.2.2-2 (Sheet 2 of 5)
Component Cooling Water System
Piping and Instrumentation Diagram
(REF) CCS 002

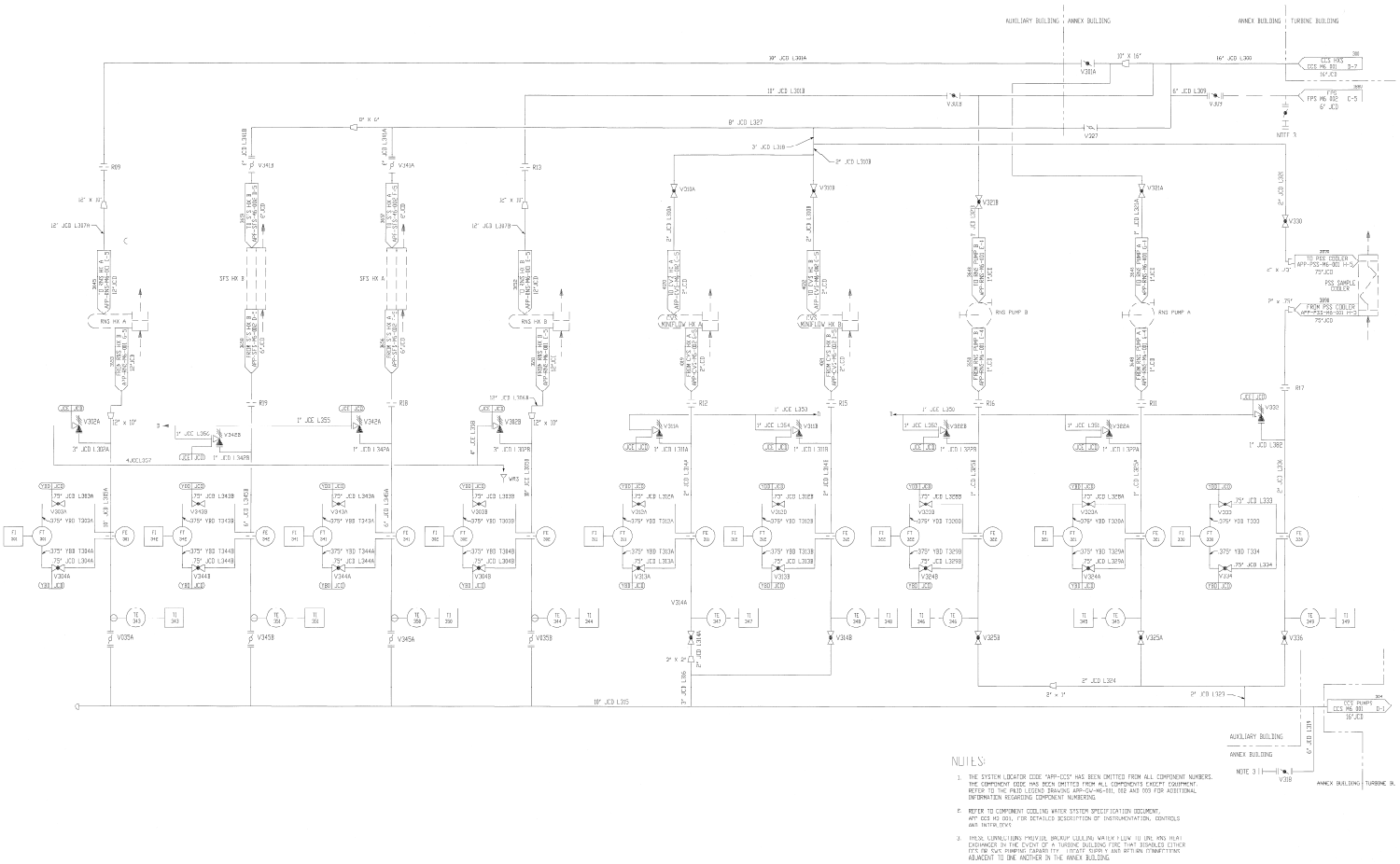

Figure represents system functional arrangement. Details internal to the system may differ as a result of implementation factors such as vendor-specific component requirements

Figure 9.2.2-2 (Sheet 3 of 5)
Component Cooling Water System
Piping and Instrumentation Diagram
(REF) CCS 003

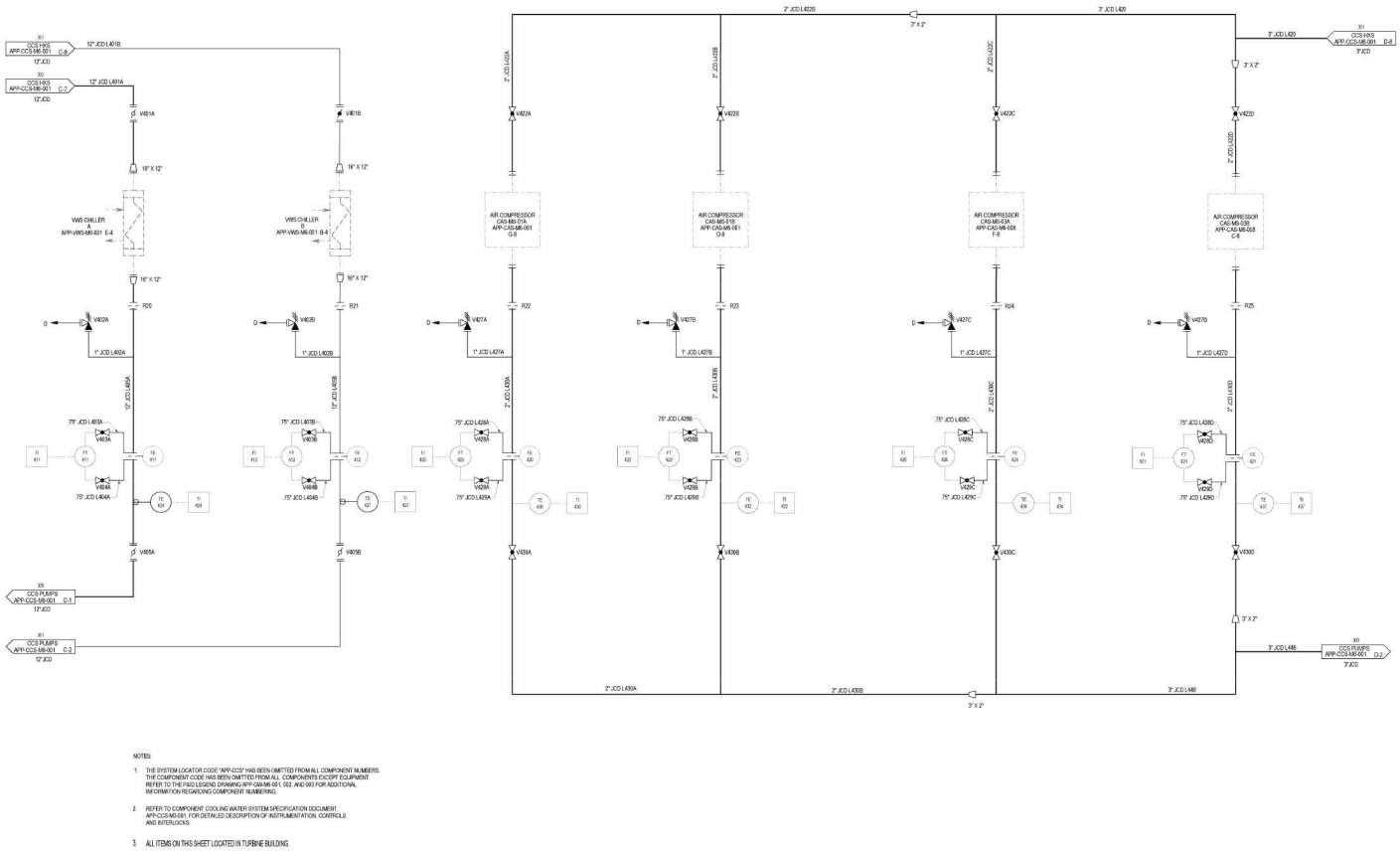

Figure represents system functional arrangement. Details internal to the system may differ as a result of implementation factors such as vendor-specific component requirements

Inside Turbine Building

Figure 9.2.2-2 (Sheet 4 of 5)
Component Cooling Water System
Piping and Instrumentation Diagram
(REF) CCS 004

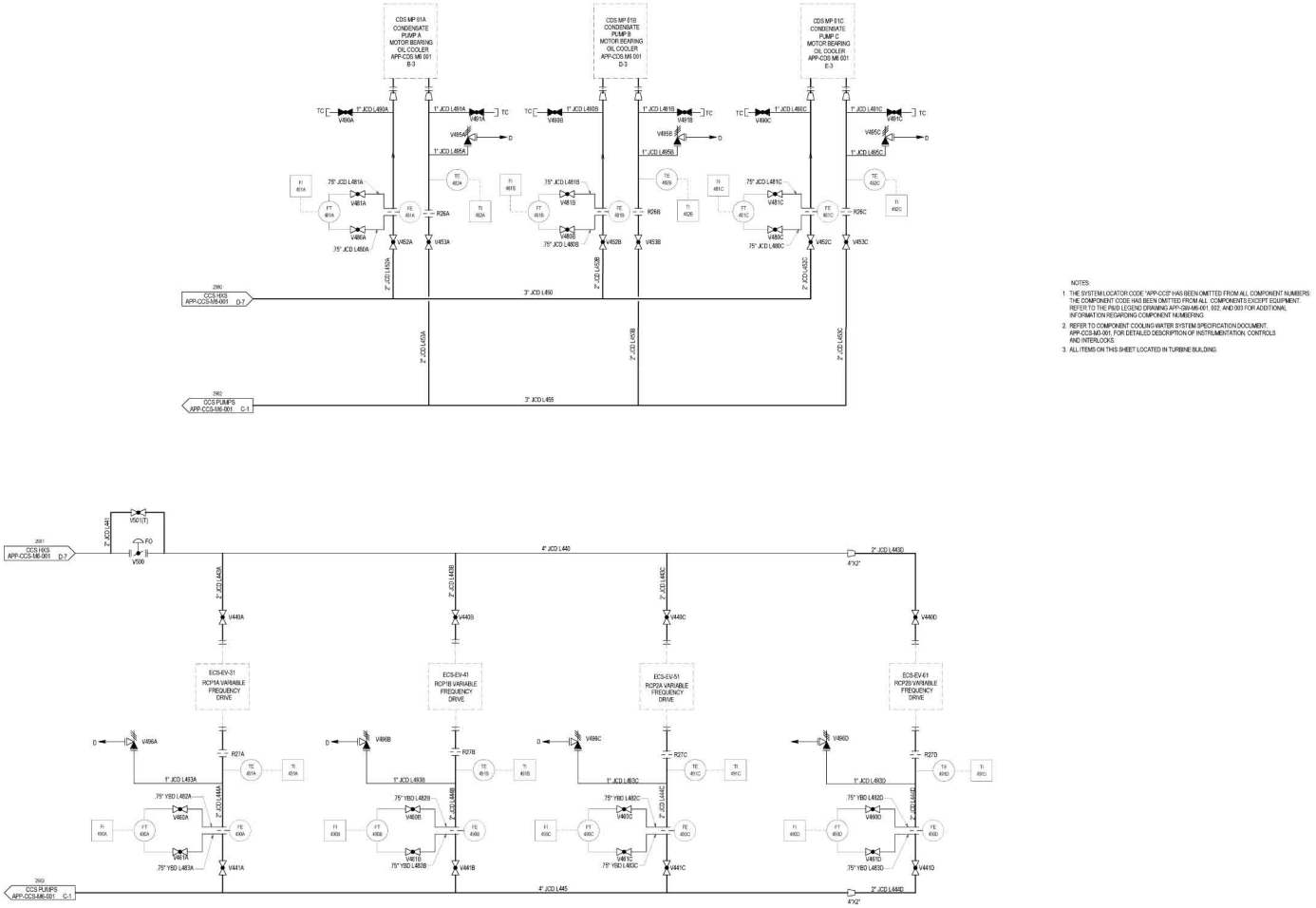

Figure represents system functional arrangement. Details internal to the system may differ as a result of implementation factors such as vendor-specific component requirements

Inside Turbine Building

Figure 9.2.2-2 (Sheet 5 of 5)
Component Cooling Water System
Piping and Instrumentation Diagram
(REF) CCS 005

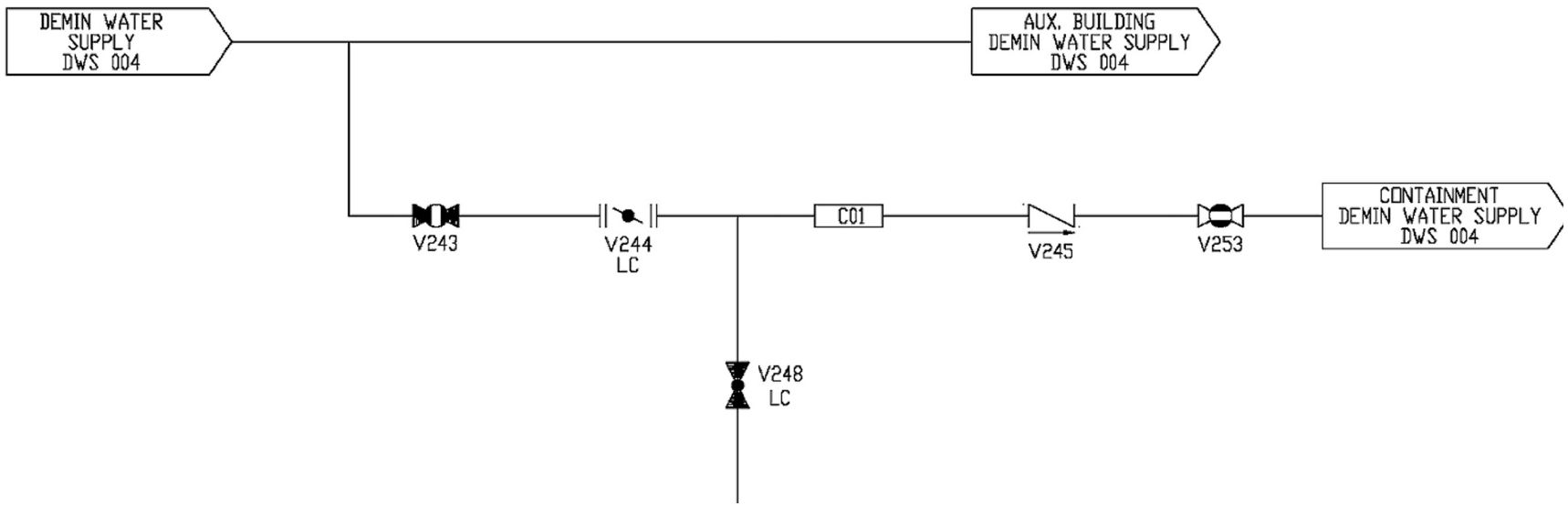

Figure 9.2.4-1
Demineralized Water Transfer and Storage System
Containment Isolation Provision
(REF) DWS 007

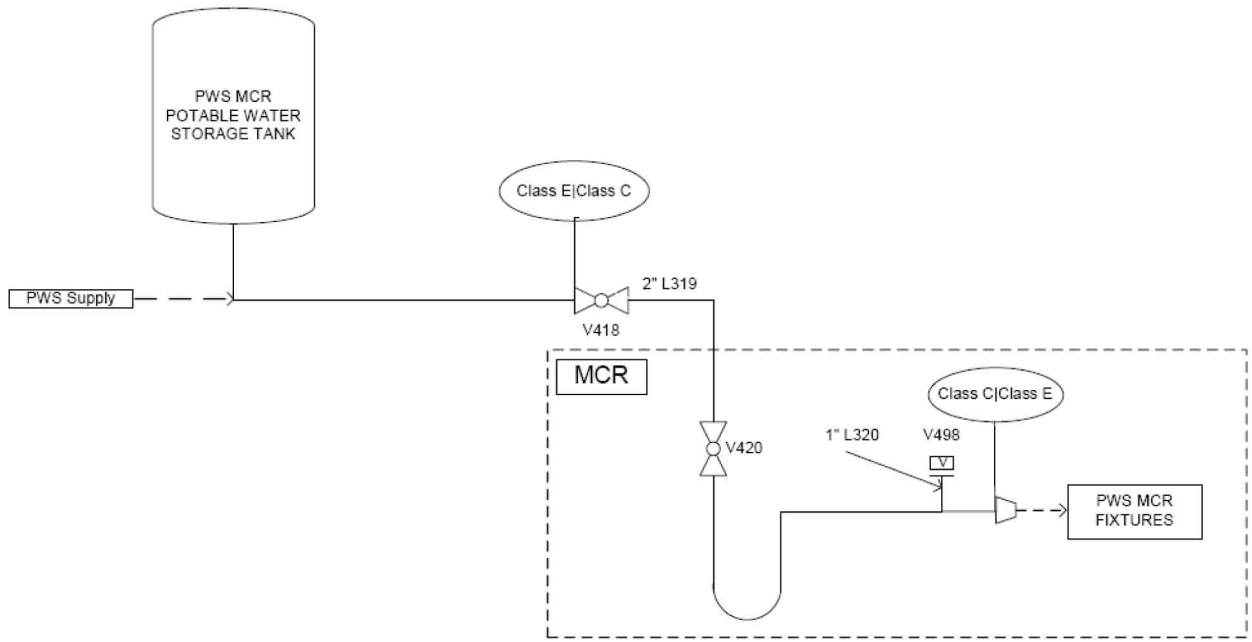

Figure 9.2.5-1
Main Control Room Potable Water System Isolation

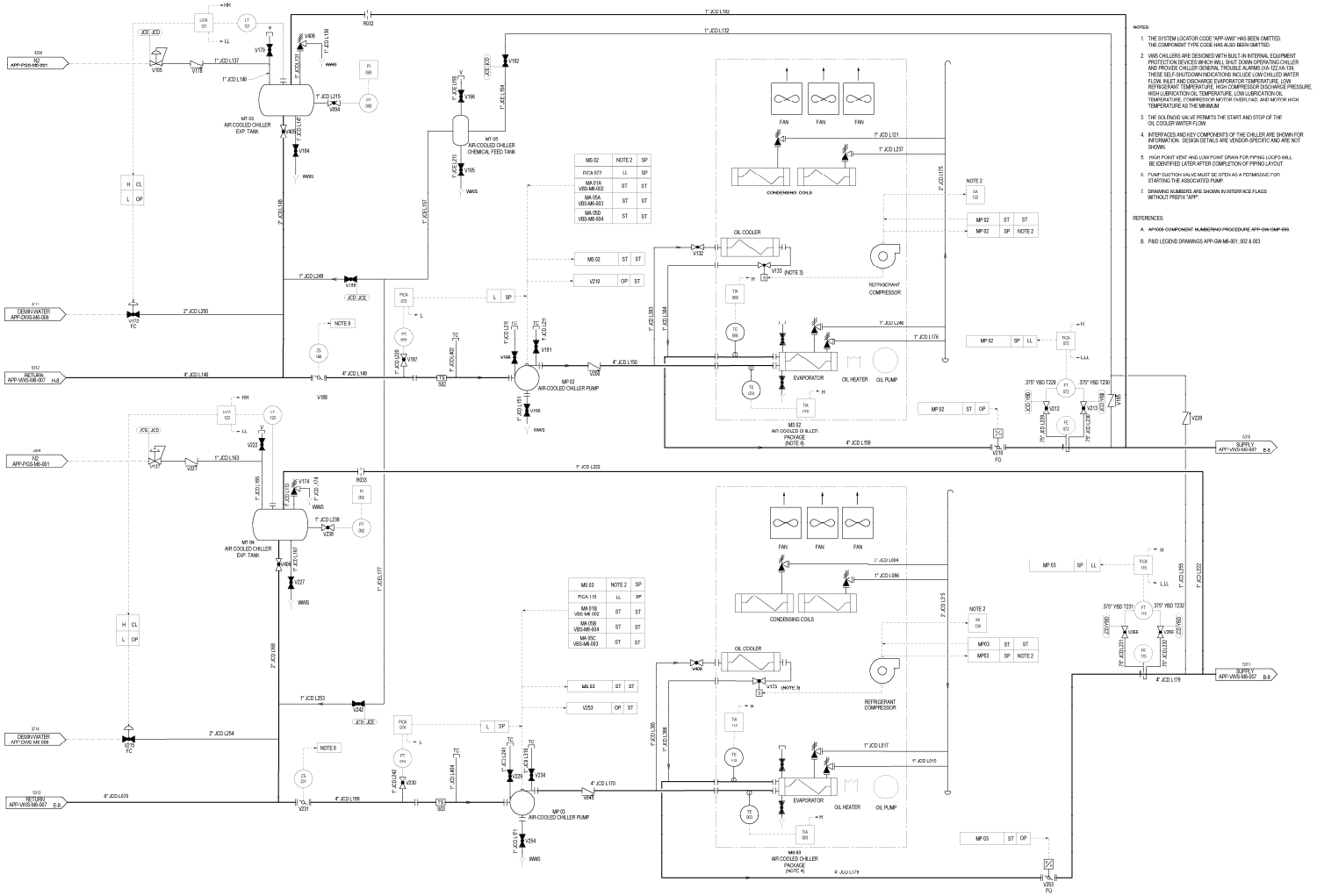

Figure represents system functional arrangement. Details internal to the system may differ as a result of implementation factors such as vendor-specific component requirements.

Inside Auxiliary Building

Figure 9.2.7-1 (Sheet 1 of 4)
Central Chilled Water System
Piping and Instrumentation Diagram
(REF) VWS 006

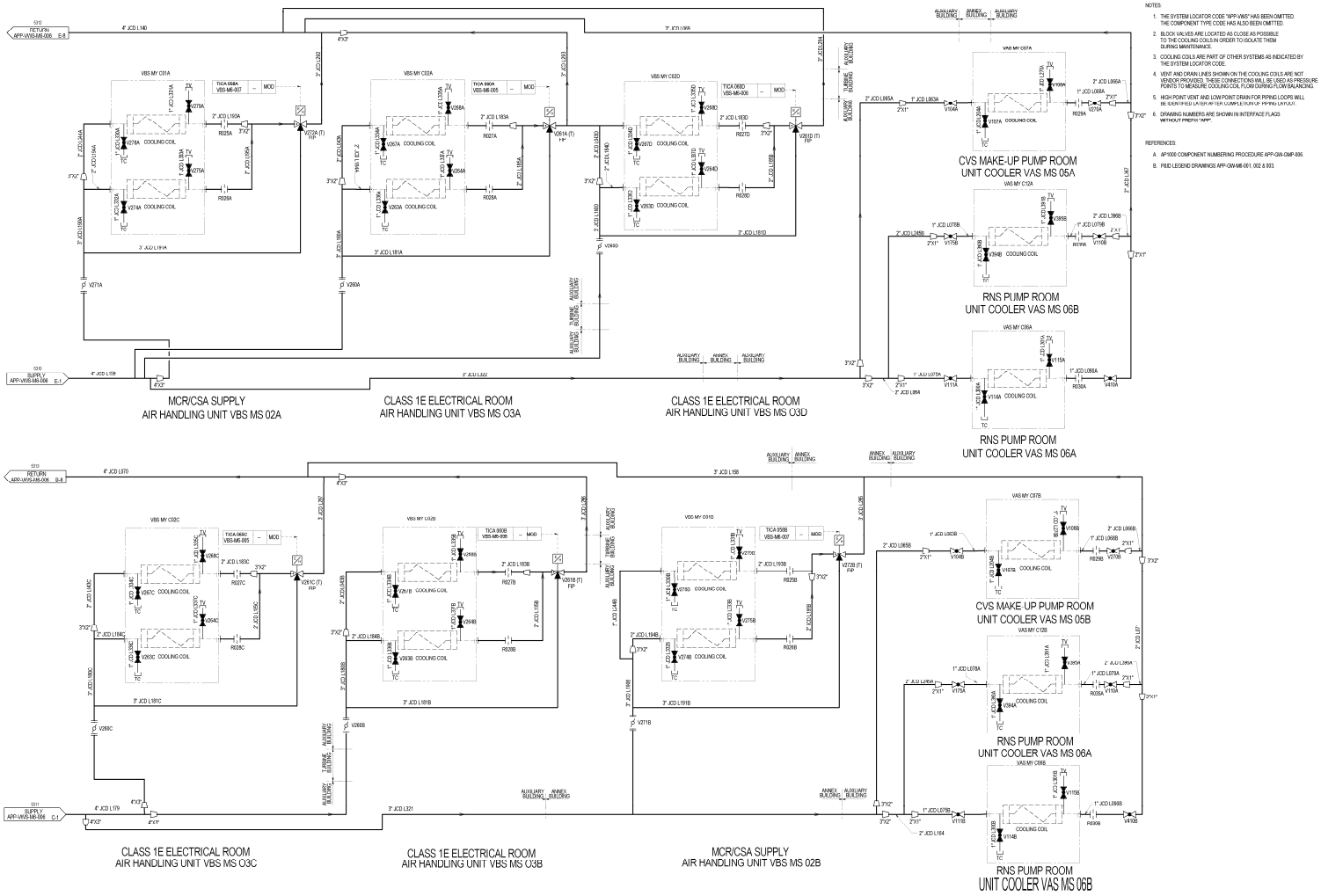

Figure represents system functional arrangement. Details internal to the system may differ as a result of implementation factors such as vendor-specific component requirements.

Figure 9.2.7-1 (Sheet 2 of 4)
Central Chilled Water System
Piping and Instrumentation Diagram
(REF) VWS 007

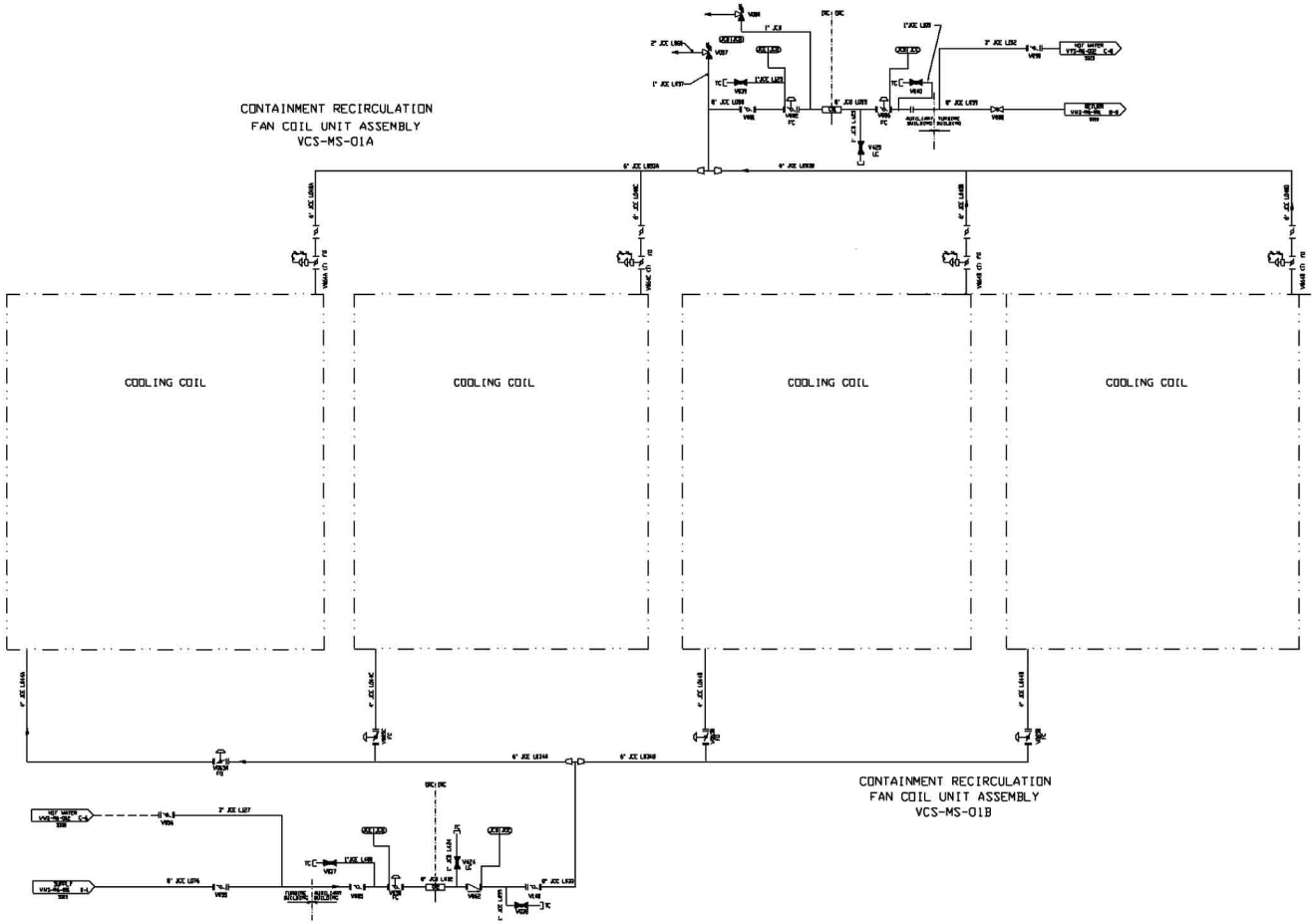

Figure represents system functional arrangement. Details internal to the system may differ as a result of implementation factors such as vendor-specific component requirements.

Figure 9.2.7-1 (Sheet 3 of 4)
Central Chilled Water System
Piping and Instrumentation Diagram
(REF) VWS 003

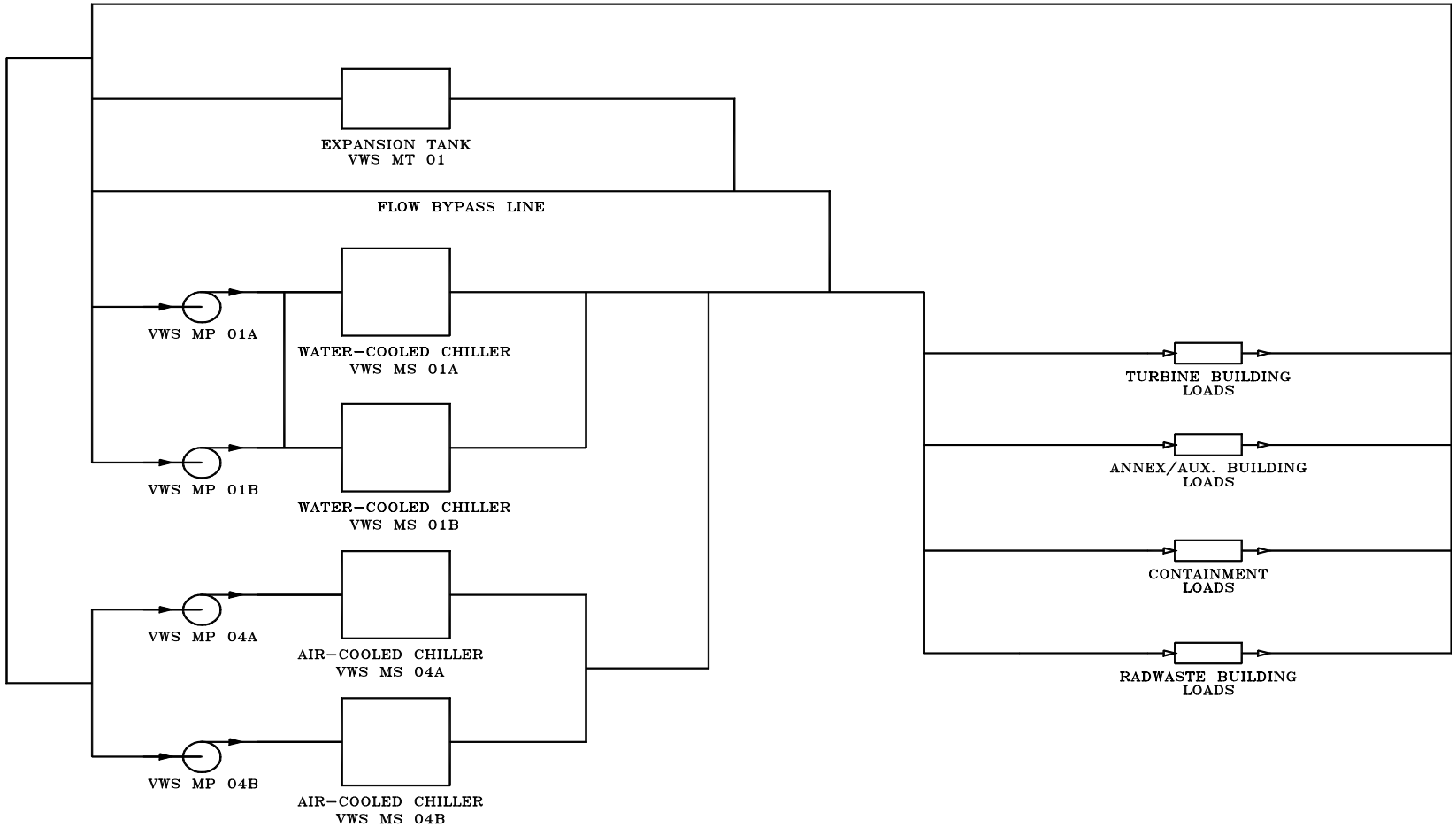

Figure represents system functional arrangement. Details internal to the system may differ as a result of implementation factors such as vendor-specific component requirements.

Figure 9.2.7-1 (Sheet 4 of 4)
High Capacity Subsystem Simplified Sketch
(REF) VWS 004

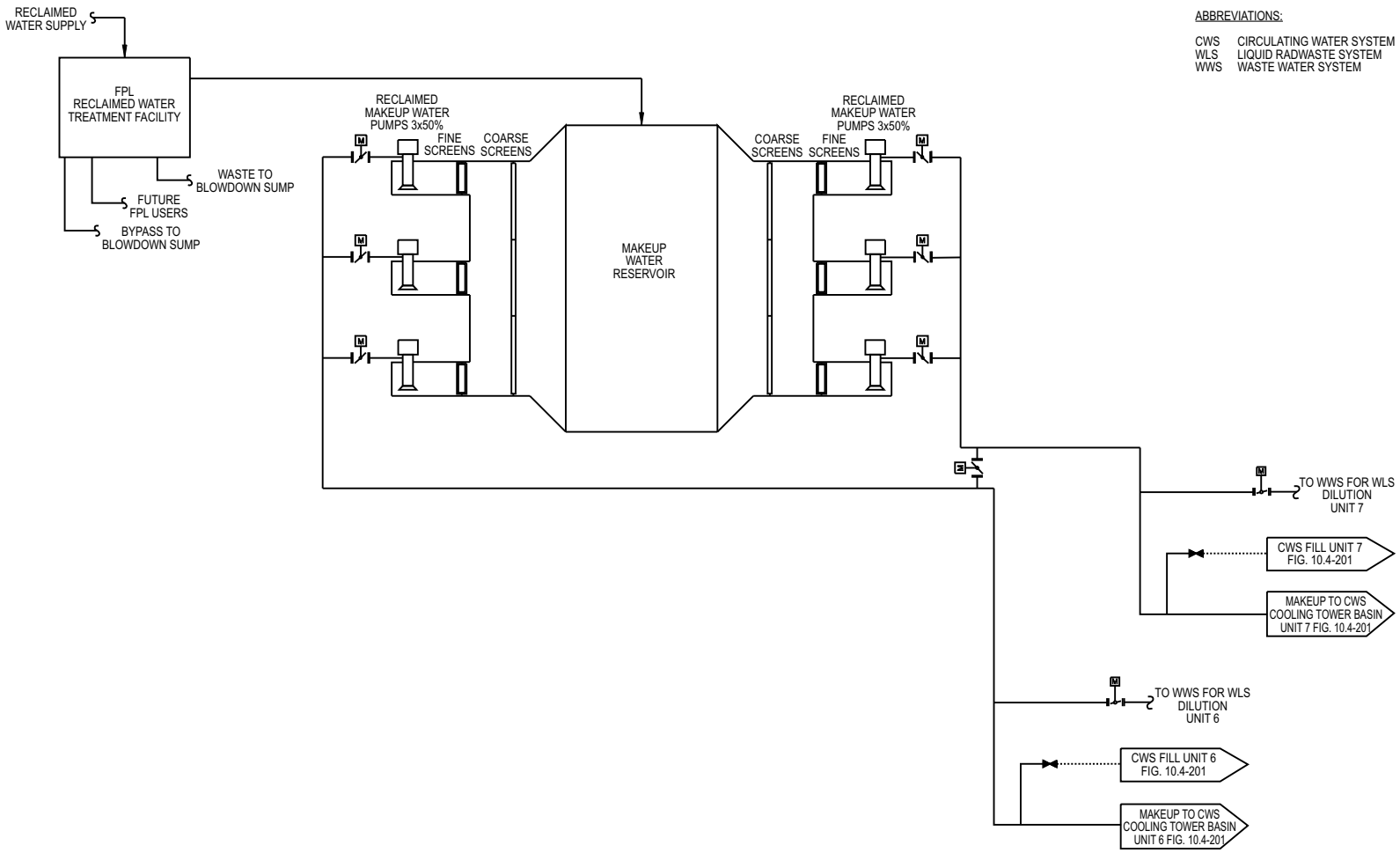

Figure 9.2-201 (Sheet 1 of 3) Raw Water System Flow Diagram

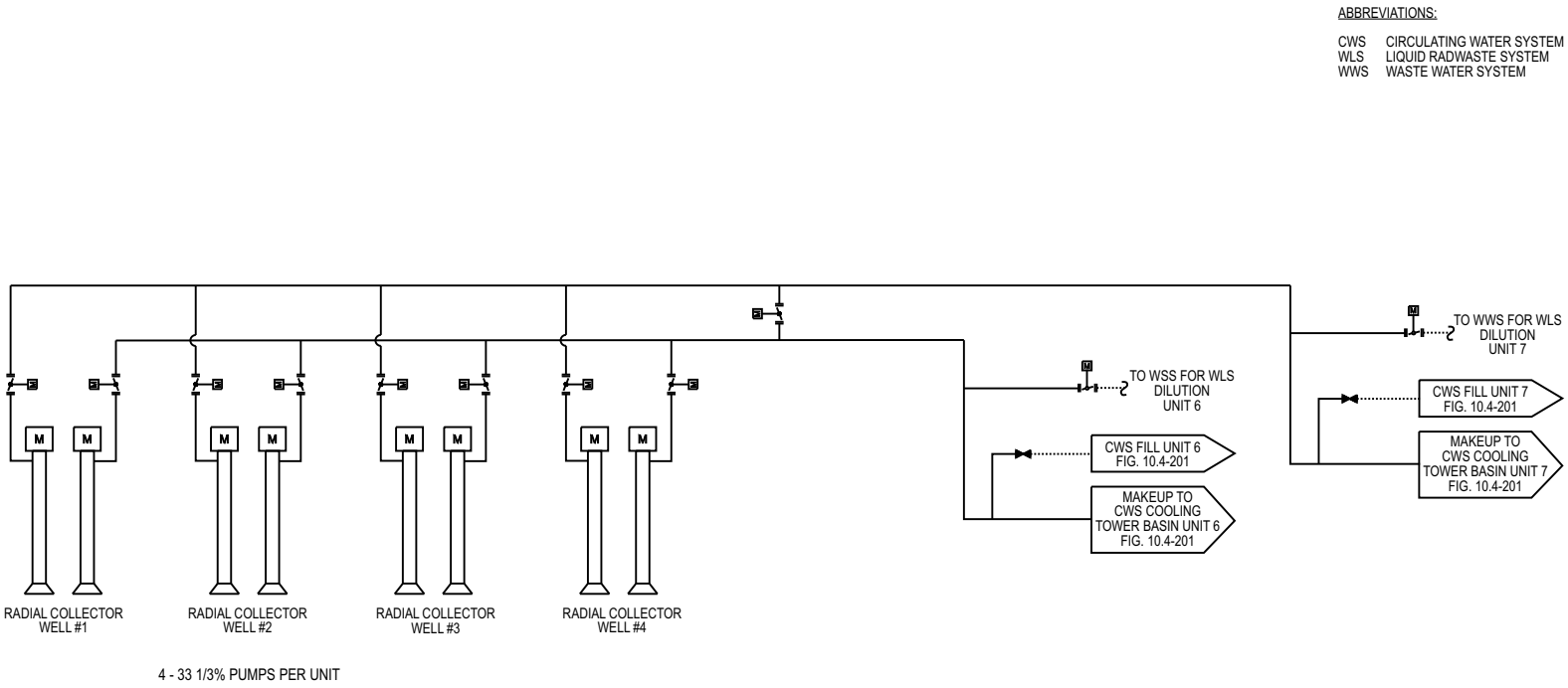

Figure 9.2-201 (Sheet 2 of 3) Raw Water System Flow Diagram

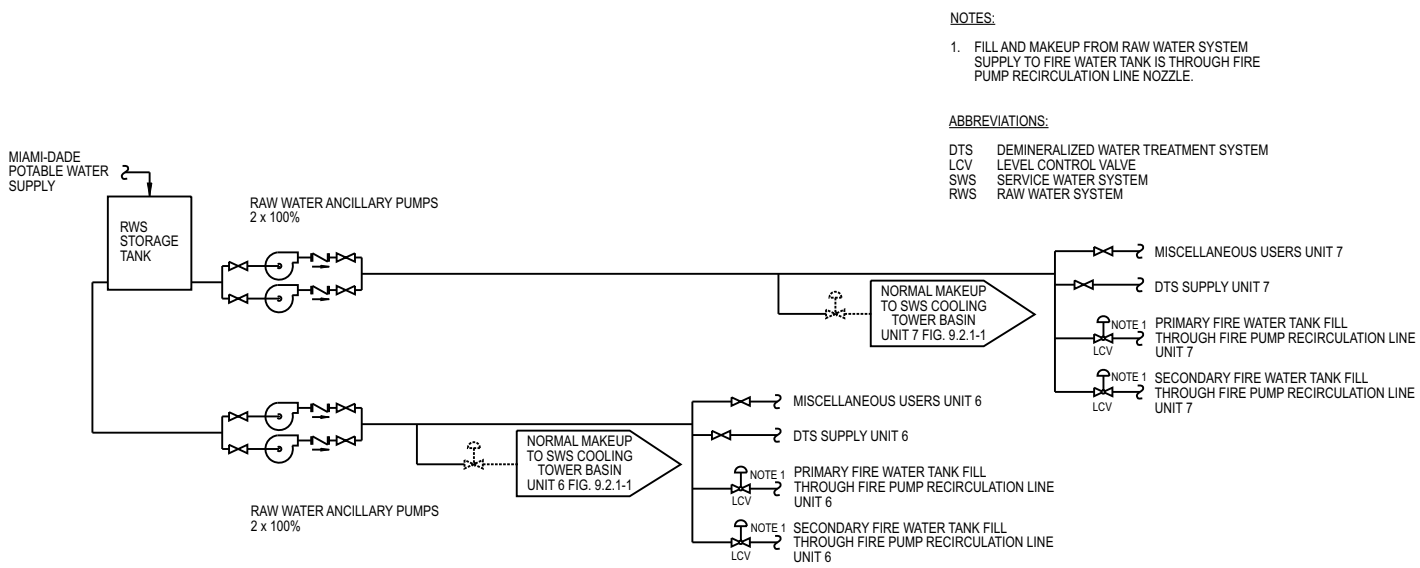

Figure 9.2-201 (Sheet 3 of 3) Raw Water System Flow Diagram

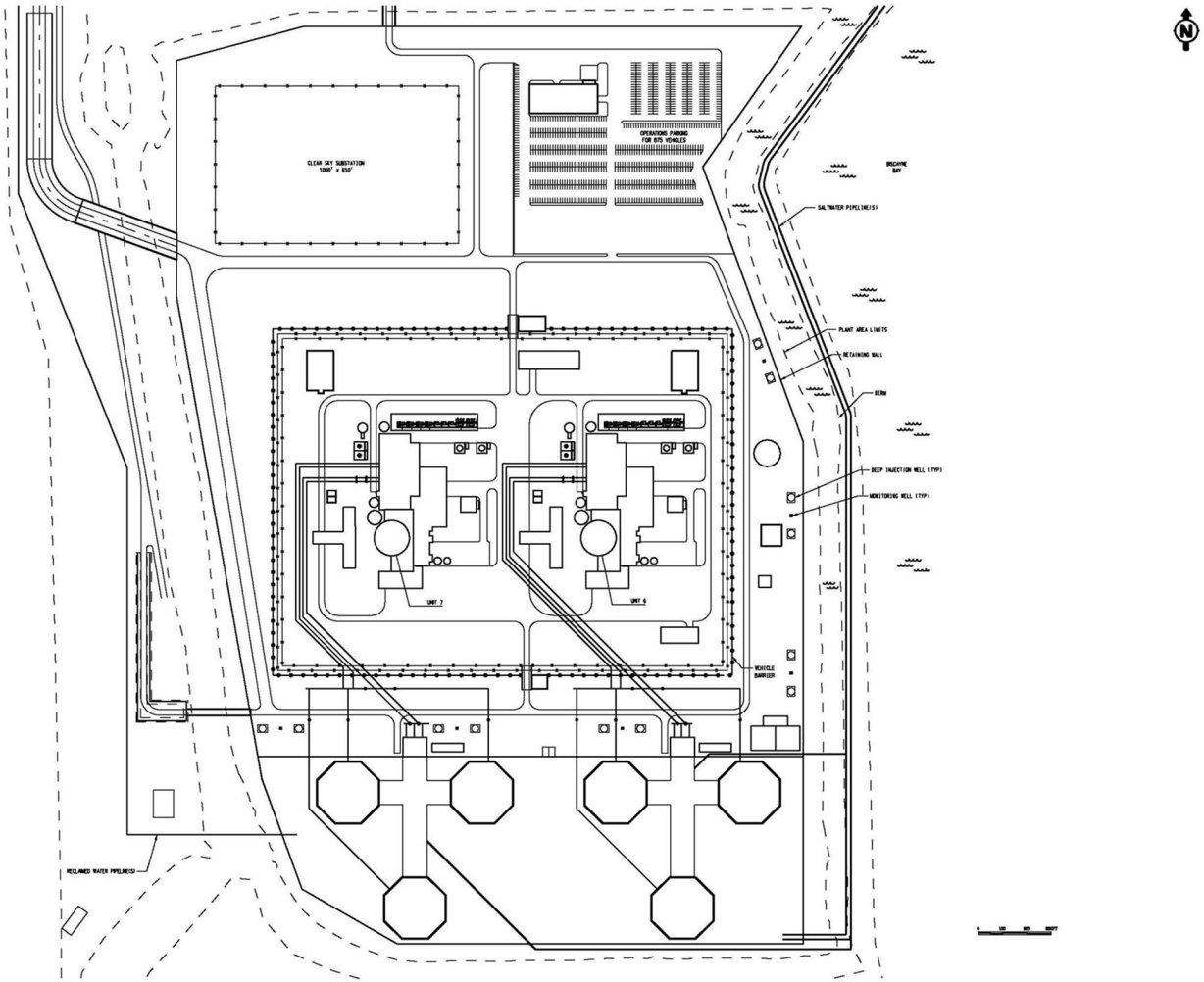

Figure 9.2-202 Deep Well Injection and Dual Zone Monitoring Well Locations

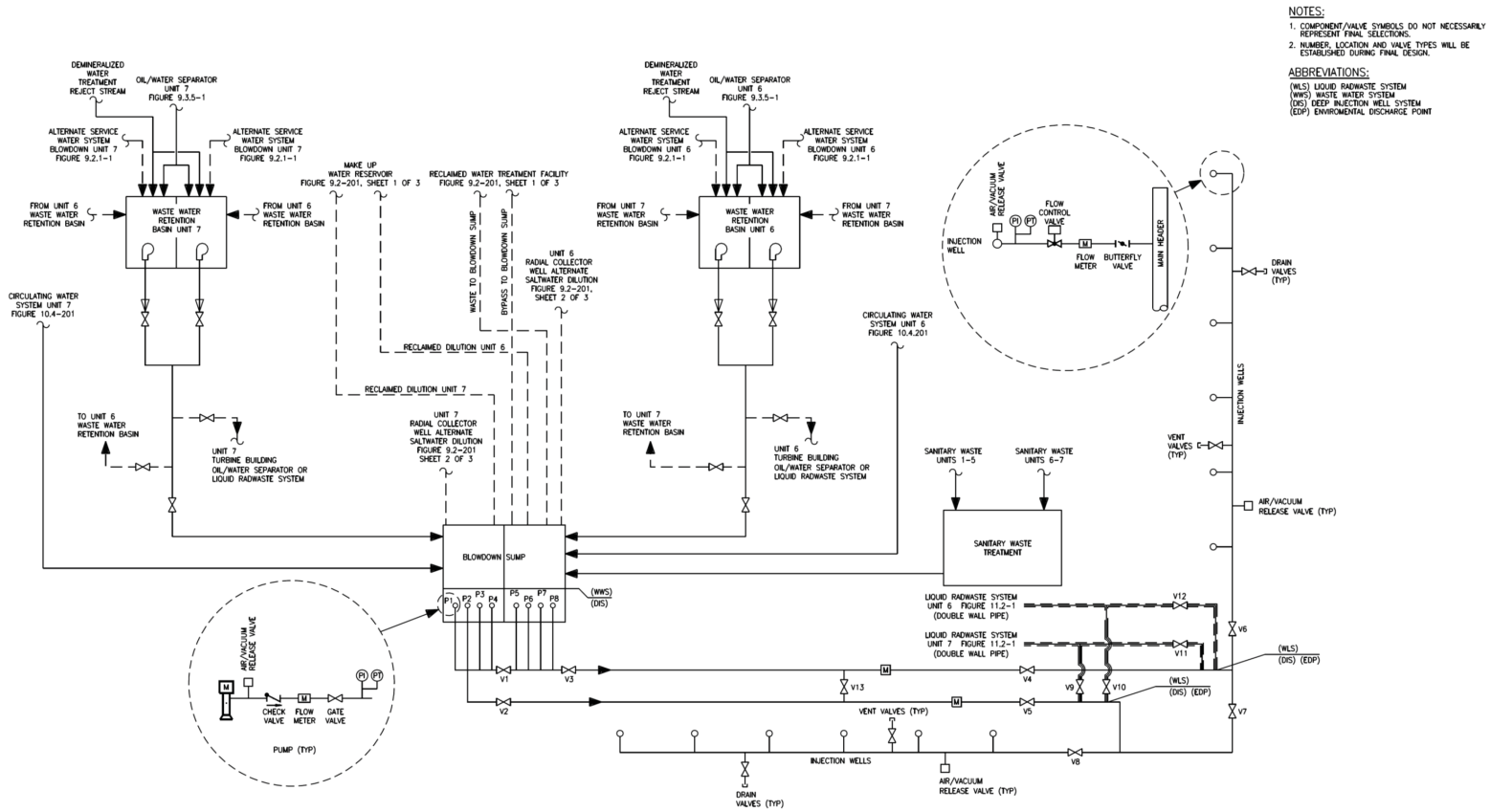

Figure 9.2-203 Liquid Waste Stream Collection and Disposal Schematic (Typical)

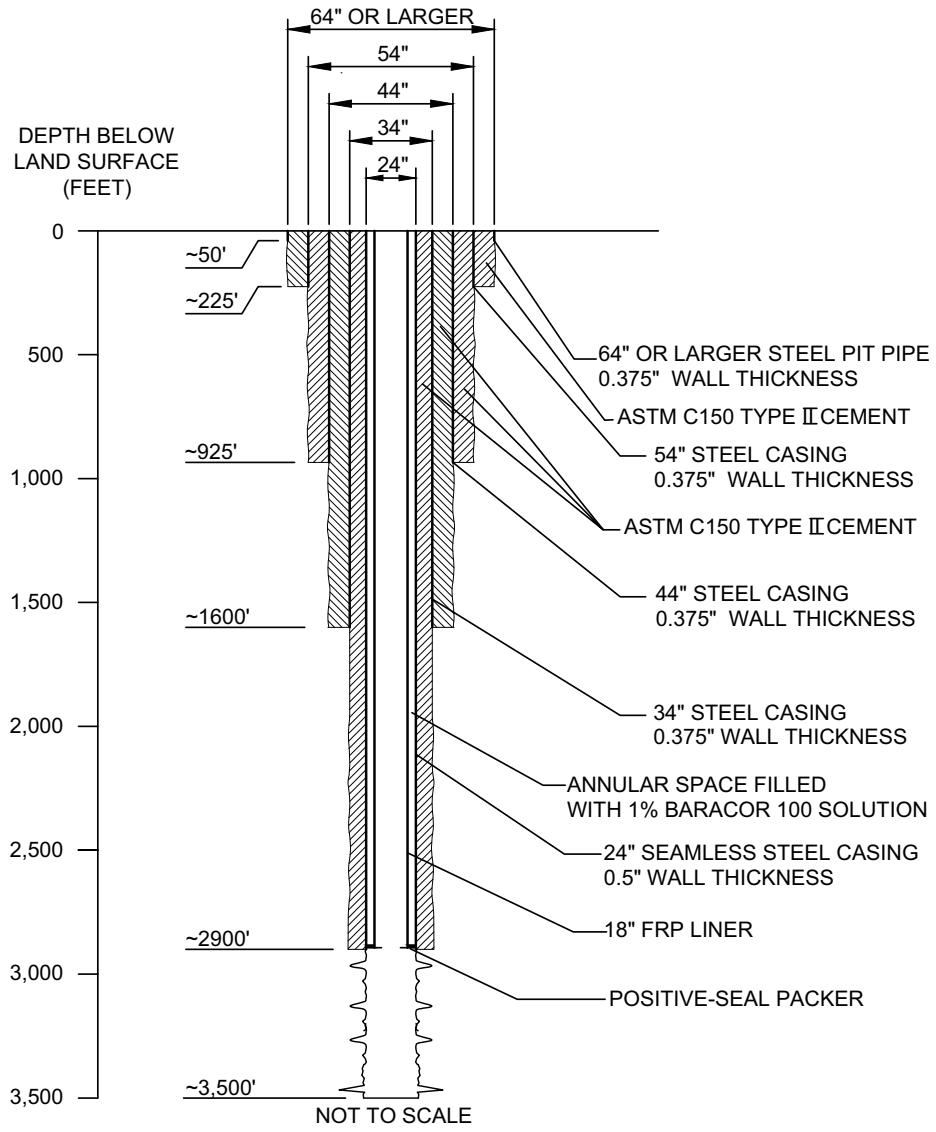

Figure 9.2-204 Deep Injection Well (Typical)

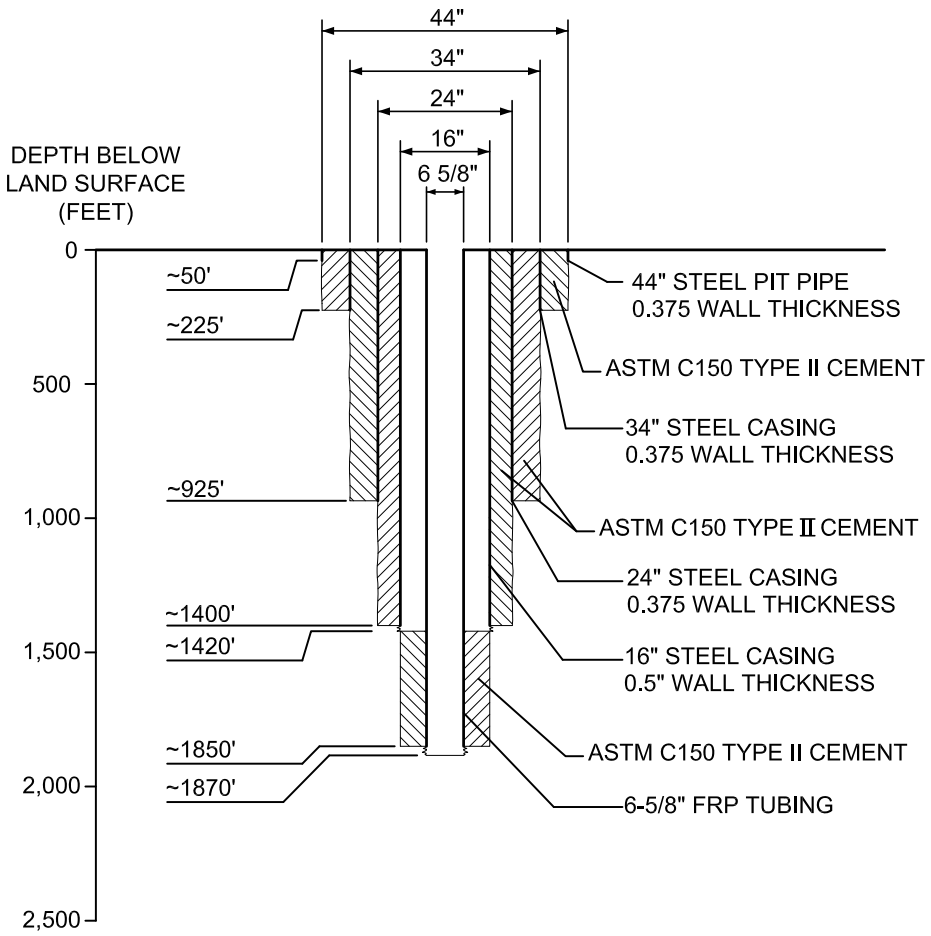

Figure 9.2-205 Dual Zone Monitoring Well (Typical)

9.3 Process Auxiliaries

9.3.1 Compressed and Instrument Air System

The compressed and instrument air system (CAS) consists of three subsystems; instrument air, service air, and high-pressure air. Instrument air supplies compressed air for air-operated valves and dampers. Service air is supplied at outlets throughout the plant to power air-operated tools and is used as a motive force for air-powered pumps. The service air subsystem is also utilized as a supply source for breathing air. Individually packaged air purification equipment is used to produce breathing quality air for protection against airborne contamination. The high-pressure air subsystem supplies air to the main control room emergency habitability system (VES), the generator breaker package, and fire fighting apparatus recharge station. The high-pressure air subsystem also provides a connection for refilling the VES storage tanks from an offsite source. Major components of the compressed and instrument air system are located in the turbine building.

9.3.1.1 Design Basis

9.3.1.1.1 Safety Design Basis

The compressed and instrument air system serves no safety-related function other than containment isolation and therefore has no nuclear safety design basis except for containment isolation. See Subsection 6.2.3 for the containment isolation system.

9.3.1.1.2 Power Generation Design Basis

The instrument air subsystem provides filtered, dried, and oil-free air for air-operated valves and dampers. The instrument air subsystem consists of two compressors and associated support equipment and controls that are powered from switchgear backed by the nonsafety-related onsite standby diesel generators as an investment protection category load. The subsystem provides high quality instrument air as specified in the ANSI/ISA S7.3 standard (Reference 9.3.8.1).

The service air subsystem provides filtered, dried, and oil-free compressed air for service outlets located throughout the plant. The service air subsystem consists of two compressors and their associated support equipment and controls. Plant breathing air requirements are satisfied by using the service air subsystem as a supply source. Individually packaged air purification equipment is used to improve the service air to Quality Verification Level D breathing air as defined in ANSI/CGA G-7.1.

The high-pressure air subsystem consists of one compressor, its associated air purification system and controls, and a high-pressure receiver. It provides clean, oil-free, high-pressure air to recharge the main control room emergency habitability system cylinders, refill the individual fire fighting breathing air bottles, and recharge the generator breaker reservoir. Quality Verification Level E air as defined in ANSI/CGA G-7.1, with a pressure dew point of 40°F or lower at 3400 psig or greater, is produced by this subsystem. See Section 6.4 for a description of the main control room habitability system.

9.3.1.2 System Description

9.3.1.2.1 General Description

Classifications of components and equipment in the compressed and instrument air system are given in Section 3.2. In accordance with NUREG-1275, instrument air quality meets the manufacturer's standards for pneumatic equipment supplied as a part of the plant. Intake filters for instrument air, service air, and high-pressure air compressors remove particulates 10 microns and larger.

Instrument Air Subsystem

The instrument air subsystem consists of two 100 percent capacity parallel air supply trains discharging to a common air distribution system. An air compressor, dryer, controls, and receiver comprise one air supply train. The two compressor trains join to a single instrument air header downstream of the receivers.

Provisions are made to temporarily cross connect the instrument and service air subsystems at the distribution header.

The instrument air line to the containment is normally open; however, air flow to the containment is monitored and a high flow alarm is provided to indicate a possible instrument air line rupture inside containment. Safety-related air-operated valves supplied by the system are identified in Table 9.3.1-1. None of these valves require instrument air to perform their safety-related function. The valves with an active safety-related function fail in the safe position on loss of instrument air pressure.

One instrument air compressor train, including its air dryer and associated equipment and controls, can be connected to each of the nonsafety-related onsite standby diesel generators. The compressors are cooled by water supplied from the component cooling water system (CCS). Refer to Subsection 9.2.2 for details. The instrument air subsystem is shown schematically in Figure 9.3.1-1. Major system components are described in Table 9.3.1-2.

Service Air Subsystem

Two 100 percent capacity compressor trains are provided for the service air subsystem. These compressor trains consist of identical equipment and share a common air receiver that feeds the service air distribution system. Cooling water to the service air compressors is supplied from the component cooling water system. Refer to Subsection 9.2.2 for details.

The service air line to containment is normally closed and is opened on an as-needed basis. The service air subsystem is shown schematically in Figure 9.3.1-1 and major system components are described in Table 9.3.1-3.

High-Pressure Air Subsystem

The high-pressure air subsystem consists of a high-pressure air compressor with an integral air purification system, controls, and a receiver.

The high-pressure air subsystem is manually operated and may be loaded on an onsite standby diesel generator. This subsystem supplies air to the main control room emergency habitability system, the generator breaker, and the fire fighting apparatus recharge station. The isolation valves to these locations are normally closed and are opened on an as-needed basis to refill the specified equipment air storage reservoirs. The high-pressure air subsystem is shown schematically in Figure 9.3.1-1 and major system components are described in Table 9.3.1-4.

9.3.1.2.2 Component Description

Instrument Air Subsystem

The instrument air subsystem consists of two air compressor trains. Each compressor train consists of a multistage, low-pressure, rotary screw, air compressor package, a desiccant dryer with a prefilter and afterfilter, and an air receiver. Each compressor package includes an intake filter, rotary screw compressor elements, silencer, intercooler, aftercooler, moisture separators, bleed-off cooler, oil cooler, oil reservoir, automatic load controls, relief valves, and a discharge air check valve. Each compressor train produces oil-free air.

Two instrument air receivers function as storage devices for compressed air. The receivers continue to supply the instrument air subsystem following a loss of the instrument air compressors until the receiver pressure drops below system requirements. Each air receiver is equipped with an automatic condensate drain valve and a pressure relief valve.

Two air dryer assemblies are provided for the instrument air subsystem. Each dryer assembly consists of a desiccant-filled, twin tower design. One tower may be used to dry air while the other tower goes through regeneration. When instrumentation senses a high dew point, the towers switch. The former operating tower then undergoes regeneration while the regenerated tower drys the instrument air.

Each dryer assembly includes a coalescing prefilter that removes oil aerosols and moisture droplets, as well as an afterfilter to remove desiccant dust.

The instrument air subsystem supplies ANSI/ISA S-7.3 high quality instrument air. Table 9.3.1-2 provides design information for the main components associated with the instrument air subsystem.

Service Air Subsystem

The service air subsystem consists of two air compressor trains. Each compressor train consists of a multistage, low-pressure, rotary screw, air compressor package, and a desiccant dryer with a prefilter and afterfilter. A common air receiver is provided for the two trains. Each compressor package includes an intake filter, rotary screw compressor elements, silencer, intercooler, aftercooler, moisture separators, bleed-off cooler, oil cooler, oil reservoir, automatic load controls, relief valves, and a discharge air check valve. Each compressor train produces oil-free air.

The common service air receiver functions as a storage device for compressed air. This air receiver is equipped with an automatic condensate drain valve and a pressure relief valve.

Two air dryer assemblies are provided for the service air subsystem. Each dryer assembly consists of a desiccant-filled, twin tower design. One tower may be used to dry air while the other tower goes through regeneration. When instrumentation senses a high dew point, the towers switch. The former operating tower then undergoes regeneration while the regenerated tower dries the service air.

Each dryer assembly includes a coalescing prefilter that removes oil aerosols and moisture droplets, as well as an afterfilter to remove desiccant dust.

Table 9.3.1-3 provides design information for the main components associated with the service air subsystem.

High-Pressure Air Subsystem

The high-pressure air subsystem utilizes an air-cooled, oil-lubricated, four-stage, reciprocating-air compressor with an integral air purification system to produce oil-free air for high-pressure applications. The compressor train includes an intake filter, air-cooled intercoolers, interstage oil/water separators, an air-cooled aftercooler, a final oil/water separator, relief valves, an air purification system, discharge check valves, and a high-pressure receiver.

The high-pressure air subsystem supplies ANSI/CGA G-7.1 Quality Verification Level E air. See Table 9.3.1-4 for the design parameters for this system.

9.3.1.2.3 System Operation

Instrument Air Subsystem

The instrument air compressors are operated by a local pressure controller located in the instrument air distribution header, which can be programmed for various sequences of operation. Normally one compressor runs continuously loading and unloading as required to supply compressed air demand. The second compressor serves as a backup and starts automatically if the first unit fails or if demand exceeds the capacity of the operating compressor.

Air from the instrument air subsystem compressor packages discharges to the air dryers and then to the receivers where it is distributed to air-operated valves and dampers throughout the plant. Instrument air pressure is reduced by pressure regulators at the pneumatic component as required.

The onsite standby power system (diesel generators) provides an alternate source of electrical power for the instrument air compressor trains. One compressor train is supplied from each electrical load group.

Service Air Subsystem

The service air subsystem compressors are operated by a local controller that can be programmed for various sequences of operation. Normally one compressor runs continuously and loads and unloads as required to supply service air demand. The second compressor serves as a backup and starts automatically if the first compressor fails or demand exceeds the capacity of the operating compressor. Air from each service air subsystem compressor package discharges to an air dryer and then to the common receiver. Service air flows from the receiver to the various service air outlets throughout the plant.

Breathing air can be obtained from any service air subsystem outlet by attaching a portable individually packaged air purification system. The breathing air purification package consists of replaceable cartridge-type filters, a pressure regulator, carbon monoxide monitoring equipment, air supply hoses, and air supply devices. Carbon monoxide is controlled by a catalytic conversion to carbon dioxide within the package. Breathing air of a Quality Verification Level D or better is supplied to personnel from the packaged purification system in accordance with the requirements of ANSI/CGA G-7.1.

High-Pressure Air Subsystem

The high-pressure air subsystem is operated when a specific high-pressure source requires refilling to replace air lost to leakage or expended during plant operations. System isolation valves to the specified equipment are manually opened and the equipment storage reservoir is replenished from the high-pressure receiver. The compressor is then started to replenish the air stored in the high-pressure receiver.

Breathing air of a Quality Verification Level E is supplied from the integral high-pressure air purification system in accordance with the requirements of ANSI/CGA G-7.1. This integral air purification system utilizes a series of replaceable cartridge-type filters to produce breathing quality air. Breathing air connections of the high-pressure air subsystem are incompatible with the breathing air connections of the service air subsystem. Carbon monoxide is controlled by a catalytic conversion to carbon dioxide within the package.

The onsite standby power system (diesel generators) provides an alternate source of electrical power for the high-pressure air compressor.

9.3.1.3 Safety Evaluation

The compressed and instrument air system has no safety-related function other than containment isolation and therefore requires no nuclear safety evaluation. Containment isolation functions are described in Subsection 6.2.3.

The compressed and instrument air system is required for normal operation and startup of the plant. Air-operated valves that are essential for safe shutdown and accident mitigation are designed to actuate to the fail-safe position upon loss of air pressure. These air-operated valves utilize safety-related solenoid valves to control the air supply.

The instrument and service air subsystems are classified as moderate-energy systems. There are no adverse effects on safety-related components associated with a postulated failure of the instrument and service air piping.

The high-pressure air subsystem is classified as a high-energy system. The high-pressure compressor and receiver are located in the turbine building, which contains no safety-related, equipment or structures. Air piping routed in safety-related areas is 1 inch or less in diameter and the dynamic consequences of a rupture are not required to be analyzed. The high-pressure air subsystem is not required to operate following a design basis accident nor is it used for safe shutdown of the plant.

9.3.1.4 Tests and Inspections

System components, such as the air compressors and air dryers, are inspected or tested prior to installation. The installed compressed air system is inspected, tested, and operated to verify that it meets its performance requirements, including operational sequences and alarm functions.

Air compressors and associated components on standby are checked and operated periodically. Desiccant in the air dryers is changed when required.

Sample points are provided downstream of the air dryers in both the instrument and service air subsystems and downstream of the purifier in the high-pressure air subsystem. Periodic checks are made to ensure high quality instrument air as specified in the ANSI/ISA S-7.3 standard. Periodic checks on the high-pressure air compressor are made on a regular basis to verify that the breathing air meets the Quality Verification Level E as indicated in the ANSI/CGA G-7.1 standard.

During the initial plant testing prior to reactor startup, safety systems utilizing instrument air are tested as part of the safety system test to verify fail-safe operation of air-operated valves upon sudden loss of instrument air or gradual reduction of air pressure as described in Regulatory Guide 1.68.3. Section 1.9 summarizes conformance with Regulatory Guide 1.68.

9.3.1.5 Instrumentation Applications

An instrumentation package is included with each of the instrument and service air compressors. Each package consists of temperature and pressure transducers, indicators, and automatic protection devices. The temperature and pressure transducers support the automatic control modes of compressor operation. A manual mode of operation is also provided for each control system. Compressed air system indication and control are available in the main control room.

The high-pressure air subsystem includes pressure and carbon monoxide instrumentation, automatic protection devices, and temperature indication.

9.3.2 Plant Gas System

The plant gas system (PGS) provides hydrogen, carbon dioxide, and nitrogen gases to the plant systems as required.

Other gases, such as oxygen, methane, acetylene, and argon, are supplied in smaller individual containers and are not supplied by the plant gas system.

9.3.2.1 Design Basis

9.3.2.1.1 Safety Design Basis

The plant gas system serves no safety-related function and therefore has no nuclear safety design basis.

9.3.2.1.2 Power Generation Design Basis

The nitrogen portion of the plant gas system supplies nitrogen for pressurizing, blanketing, and purging of various plant components.

The hydrogen gas portion of the plant gas system supplies hydrogen to the main plant electrical generator for cooling as well as to other plant auxiliary systems.

The carbon dioxide portion of the plant gas system supplies carbon dioxide to the generator for purging of hydrogen and air during layup or plant outages.

9.3.2.2 System Description

Classification of equipment and components is given in Section 3.2.

9.3.2.2.1 General Description

The nitrogen portion of the plant gas system is a packaged system consisting of a liquid nitrogen storage tank and vaporizers. Nitrogen gas is supplied in both a high-pressure and a low-pressure subsystem. The high-pressure subsystem uses a pump to pressurize the gas supplying the accumulators in the passive core cooling system. The high-pressure supply is then reduced to supply makeup to the reactor coolant drain tank for purging and blanketing. Low-pressure nitrogen is provided for component purging, layup/blanketing, and pressurization.

The main steam isolation valves (MSIVs) and main feedwater isolation valves (MFIVs) use compressed nitrogen stored within the valve operators as the motive force to close the valves. The main steam isolation valves are described in Subsection 10.3.2.2.4 and the main feedwater isolation valves are described in Subsection 10.4.7.2.2. Nitrogen makeup for these valves (if needed) is provided from portable high-pressure nitrogen bottles using temporary connections on the valves.

The packaged nitrogen system is located in the gas storage area in the yard.

The low-pressure hydrogen gas portion of the plant gas system is a packaged system consisting of a liquid hydrogen storage tank and vaporizers to supply hydrogen gas to the main generator for generator cooling and the demineralized water transfer and storage system to support removal of dissolved oxygen. The packaged hydrogen system is located in the gas storage area in the yard.

A separate high-pressure hydrogen packaged system supplies hydrogen to the chemical and volume control to support removal of dissolved oxygen in the RCS. The hydrogen for this system is stored as

a compressed gas in high-pressure tanks (gas bottles). The high-pressure hydrogen supply package system is located outdoors adjacent to the turbine building.

The gas storage area in the yard is located a sufficient distance away from safety-related structures, systems, and components that they are protected from the effects of explosion, flammable vapor cloud, and fire. The gas storage area is located a sufficient distance away from the air inlet to the control room so that the control room operators are protected from potential toxic effects and asphyxiation. The location of the gas storage area shown in Figure 1.2-2 is an acceptable location, but that location is not part of the certified design. The location of the gas storage area is a site-specific determination.

The carbon dioxide portion of the plant gas system, which is a packaged system consisting of one liquid storage tank and a vaporizer, produces gaseous carbon dioxide to purge the main generator. This packaged system is located in the gas storage area in the yard.

Liquid gas storage tanks are built in accordance with the ASME Boiler and Pressure Vessel Code, Section VIII, Division 1, 1998 Edition, 2000 Addenda.

9.3.2.2.2 Component Description

Liquid Nitrogen Storage Tank

Liquid nitrogen is stored under its own vapor pressure as a saturated liquid in a dual wall tank. This tank supplies nitrogen for the high- and low-pressure nitrogen gas systems. The annular space between the inner and outer tank walls is filled with insulation and evacuated when the tank is cold.

Liquid Nitrogen Pump

A cryogenic liquid nitrogen pump is utilized to provide a supply of high-pressure nitrogen. It is a single-cylinder, positive displacement pump with the entire "cold" pumping assembly enclosed in a vacuum-jacket, which permits the pump to remain cold in the standby condition.

Nitrogen High-Pressure Ambient Air Vaporizer

Liquid nitrogen is vaporized by a high-pressure natural convection vaporizer, which vaporizes and superheats cryogenic nitrogen using heat from the ambient air.

Nitrogen Low-Pressure Ambient Air Vaporizer

The low-pressure vaporizer unit has two parallel banks. In the event of frost buildup on the active bank, flow is redirected to the opposite bank while the other bank defrosts.

Gaseous Nitrogen Storage Tubes

Gaseous nitrogen storage tubes are provided. These storage tubes provide short-term storage for high-pressure nitrogen.

Liquid Hydrogen Storage Tank

Cryogenic liquid hydrogen is stored in a dual wall tank. The annular space between the walls is insulated using a vacuum and wrapped reflective insulation to minimize heat leakage.

Hydrogen Ambient Air Vaporizers

Two parallel banks of vaporizers are provided. In the event of frost buildup on the active bank, flow is redirected to the opposite bank while the other bank defrosts.

Gaseous Hydrogen Storage Tanks

Gaseous hydrogen storage tanks are used to provide for storage of high-pressure hydrogen.

Liquid Carbon Dioxide Storage Tank

Cryogenic liquid carbon dioxide is stored in an insulated single wall tank to minimize heat transfer.

Carbon Dioxide Electric Vaporizer

The liquid carbon dioxide is vaporized using electric resistance heating.

9.3.2.2.3 System Operation

Liquid nitrogen is stored under its own vapor pressure as a saturated liquid. An economizer circuit minimizes product loss due to vessel boiloff under low-flow conditions. A pressure build circuit maintains pressure at a suitable level above line delivery pressures. For the low-pressure system, liquid is withdrawn, vaporized, and pressure regulated prior to delivery to the low-pressure nitrogen manifold. For high-pressure nitrogen, liquid is withdrawn by the pump, vaporized, and discharged into the high-pressure storage tubes. The gas is then pressure regulated and routed to the high-pressure nitrogen manifold.

Liquid hydrogen is stored in a cryogenic storage vessel complete with an economizer circuit and a pressure build circuit. Ambient air vaporizers turn the liquid to a gas, which is pressure regulated. See Subsection 9.3.6 for further discussion of hydrogen use in the chemical and volume control system. The hydrogen used in the chemical and volume control system is supplied from the high-pressure gaseous hydrogen storage tanks.

Liquid carbon dioxide is distributed from a cryogenic storage vessel. An electric vaporizer turns the liquid to a gas, which is pressure regulated for the generator purge.

9.3.2.3 Safety Evaluation

The plant gas system is required for normal plant operation and startup of the plant. The plant gas system is not required for safe shutdown of the plant. Therefore, it is not designed to meet seismic Category I requirements or single failure criterion. The plant gas system serves no safety-related function and has no safety design basis.

The nitrogen, the carbon dioxide, and the hydrogen system storage is located outside of the main buildings. The storage tanks are analyzed as a potential missile source. Refer to Section 3.5. Accidents involving accidental detonations of hydrogen from the onsite storage of compressed or liquid hydrogen are evaluated for damage to safety–related structures, systems, and components. Refer to Section 2.2. For explosions, the plant gas system is designed for conformance with Regulatory Guide 1.91.

The effects of the plant gas system on main control room habitability are addressed in Section 6.4. The main control room habitability evaluation considers the flammability and asphyxiation potential for these gases.

9.3.2.4 Tests and Inspections

9.3.2.4.1 Storage Vessel Testing

- Each storage vessel is hydrostatically tested in accordance with the ASME Boiler and Pressure Vessel Code, Section VIII, Division 1, 1998.

- Each vessel is examined using the magnetic particle method.

9.3.2.5 Instrumentation Requirements

Low-level indication alarms are provided in the main control room for the liquid nitrogen and the hydrogen storage tank levels.

Temperature and pressure indications are provided at various points within the plant gas system.

9.3.3 Primary Sampling System

The AP1000 primary sampling system (PSS) performs the following functions:

- Collects in normal operation mode both liquid and gaseous samples
- Provides for local grab samples during normal operation mode

This system includes equipment to collect representative samples of the various process fluids, including reactor coolant system and containment air, in a manner that adheres to as-low-as-reasonably-achievable (ALARA) principles during normal and post-accident conditions.

The primary sampling system also includes provisions to route sample flow to a laboratory for continuous or intermittent sample analysis, as desired.

The primary sampling system provides a way to monitor the plant and various system conditions using the collected and analyzed samples.

A safety-related containment hydrogen analyzer provided to monitor the containment atmosphere following a postulated loss-of-coolant accident (LOCA) is described in Subsection 6.2.4. A discussion of process radiation monitoring is provided in Section 11.5.

9.3.3.1 Design Bases

9.3.3.1.1 Safety Design Basis

The primary sampling system has no safety-related function, other than containment isolation and therefore requires no nuclear safety evaluation, other than containment isolation, which is described in Subsection 6.2.

The equipment and seismic classification are discussed in Section 3.2.

9.3.3.1.2 Power Generation Design Basis

9.3.3.1.2.1 Sampling During Normal Plant Operations

During normal operation, the primary sampling system collects representative samples of fluids in the reactor coolant system (RCS) and auxiliary primary systems process streams and the containment atmosphere for analysis, as listed in Table 9.3.3-1. Local sample points, as listed in Table 9.3.3-2, are provided at various process points of the systems.

The results of the sample analyses are used to perform the following functions:

- Monitor core reactivity
- Monitor fuel rod integrity

- Evaluate ion exchanger (demineralizer) and filter performance
- Specify chemical additions to the various systems;
- Maintain acceptable hydrogen levels in the reactor coolant system
- Detect radioactive material leakage

The measurements are used to evaluate water chemistry and to recommend corrective action by the laboratory staff.

The primary sampling system component classification is provided in Section 3.2.

9.3.3.1.2.2 Post-Accident Sampling

The primary sampling system does not include specific post-accident sampling capability. However, in accordance with Reference 5 there are contingency plans for obtaining and analyzing highly radioactive samples of reactor coolant, containment sump, and containment atmosphere. These plans include the procedures to analyze, during the later stages of accident response, reactor coolant for boron, containment atmosphere for hydrogen and fission products, and containment sump water for pH.

The primary means of containment atmosphere hydrogen analysis is the hydrogen analyzer described in Subsection 6.2.4, which is not part of the post-accident sampling capabilities.

9.3.3.2 System Description

The primary sampling system is a manually operated system. It collects representative samples of fluids from the reactor coolant system and various primary auxiliary system process streams for analysis by the plant operating staff. This sampling process is performed during normal plant operations.

The primary sampling system consists of two separate portions: the liquid sampling portion and the gas sampling portion.

9.3.3.2.1 Nuclear Sampling System - Liquids

The liquid sampling portion of the primary sampling system collects samples from the reactor coolant system and the auxiliary systems and transports them to a common location in a sample room in the auxiliary building. Control and instrumentation is provided for safe, reliable operation. This portion of the system uses 1/4 inch stainless steel tubing. The small tubing flow area limits flow to less than chemical and volume control system makeup capacity in the event of a leak in the sampling lines. Dissolved gases in the reactor coolant system are collected in this system also.

Sample flow is routed to a grab sampling unit. This unit is in an enclosure, which controls the spread of contamination and provides shielding. The grab sampling unit is further shielded by a concrete wall to minimize radiation exposure.

Valves inside the grab sampling unit have long handles extending outside the enclosure and are manually operated. This arrangement allows the operator to obtain a sample quickly with minimum radiation exposure. A schematic diagram is provided on the front of the grab sampling unit to illustrate the tube routing inside.

Since the motive force during normal operations is the system pressure, the sampling system is designed to reactor coolant system pressure. If system pressure is not available, an eductor supplies the motive force for sample collection.

A direct line from the grab sampling unit to the laboratory provides the capability for continuous liquid sampling and analysis with online monitors.

Prior to the collection of liquid samples either in the laboratory or in the grab sampling unit, the lines are purged with source liquid to provide representative samples. The purging flow returns to the effluent holdup tank of the liquid radwaste system.

Figure 9.3.3-1 is a simplified sketch of the primary sampling system.

9.3.3.2.2 Nuclear Sampling System - Gaseous

This portion of the primary sampling system collects gaseous samples from the containment atmosphere. Gaseous sampling is conducted in the sample room in the auxiliary building, and it shares with the liquid sampling portion the grab sampling unit and the control panel. However, it uses 3/8 inch stainless steel tubing. Similar to the liquid sampling system, the gas sample subsystem is also manually operated with extension stems on the valves. Only grab samples are collected for the gas sampling process. The lines are purged prior to sample collection to provide representative samples. The purged gas returns to the containment sump.

Provisions are also made to dilute the gas sample. The dilution process uses nitrogen from a local gas bottle.

The gas sampling system uses an ejector as the motive force for sample collection. The ejector uses nitrogen from a local gas bottle as the motive force.

9.3.3.3 Containment Isolation Valves

Containment isolation valves are classified as Safety Class B. The lines penetrating the reactor containment meet the containment isolation criteria. See Subsection 6.2.3.

Three lines penetrate the containment. One line carries the liquid samples from their sources to the grab sampling unit or the laboratory. The second line carries the containment air samples from their source to the sampling unit. The third line returns the liquid or containment air sampling flows to the containment sump. The valves fail closed.

These valves close on a containment isolation signal. In addition, the outside containment isolation valve in the liquid sampling path closes on a high sampling flow temperature or high radiation downstream of the sample cooler. This prevents the operator from working with high temperature fluid and minimizes the possibility of operator injury.

9.3.3.4 System Operation and Performance

The primary sampling system is manually operated. The tubing size and sampling flow rate are selected throughout the system to reduce the amount of purge flow and to provide turbulent sampling flow (to collect representative samples). A delay coil of tubing is installed inside containment to provide at least 60 seconds of transit time for the sampling fluid to exit the containment from the hot leg. This 60-second delay is needed for N-16 decay.

9.3.3.5 Design Evaluation

The primary sampling system has no safety function, other than containment isolation and therefore requires no nuclear safety evaluation, other than containment isolation.

Subsection 6.2.3 provides the safety evaluation for the containment isolation system. Primary sampling system lines penetrating the containment are isolated at the containment boundary by valves that close upon receipt of a containment isolation signal and by manual actuation. (See Subsection 6.2.3 for a discussion of containment isolation.)

The primary sampling system connects to the reactor coolant system and the passive core cooling system (PXS) and therefore provides features consistent with ANSI standards and ASME codes to protect these system pressure boundaries.

The primary sampling system is not required for accident mitigation or post-accident sampling; but there are plans for obtaining and analyzing highly radioactive samples of reactor coolant, containment sump, and containment atmosphere in accordance with Reference 5.

The acceptability of the design of the primary sampling system is based on specific general design criteria and regulatory guides. The design of the primary sampling system is consistent with the criteria set forth in Subsection 9.3.2, "Process and Post-Accident Sampling Systems," of the NRC's Standard Review Plan (Reference 6) as modified by Reference 5. The specific general design criteria identified in the Standard Review Plan are General Design Criteria 1, 2, 13, 14, 26, 41, 60, 63, and 64. See Section 1.9 for a discussion of regulatory compliance.

9.3.3.6 Inspection and Testing Requirements

9.3.3.6.1 Preoperational Testing

Preoperational testing is performed after installation and prior to plant startup. Proper operation of the primary sampling system is demonstrated during preoperational testing. A sample is drawn from the reactor coolant system, containment atmosphere and other sample points via the sampling system in order to verify proper system operation.

9.3.3.6.2 Operational Testing

The proper operation and availability of the liquid and gaseous sampling subsystems are proven by continued proper sampling operations.

9.3.3.7 Instrumentation Requirements

The primary sampling system uses indicators as required to facilitate manual operation and to verify sample conditions before samples are drawn. Radiation monitoring instruments are used to monitor the incoming fluid (liquid or gas) radioactivity level.

The temperature indicator inside the grab sampling unit provides a signal to close the outside containment isolation valve when the sampling flow temperature exceeds pre-set limits. Likewise, the radiation monitors also provide a signal to close the outside containment isolation valves when excessive radiation levels are detected, for operator protection.

9.3.4 Secondary Sampling System

The secondary sampling system (SSS) delivers representative samples of fluids from secondary systems to sample analyzer packages. Continuous online secondary chemistry monitoring detects impurity ingress and provides early diagnosis of system chemistry excursions in the plant. Secondary sampling monitors send control signals to the turbine island chemical feed system that automatically injects corrosion control chemicals into the condensate and feedwater systems.

9.3.4.1 Design Basis

9.3.4.1.1 Safety Design Basis

The secondary sampling system serves no safety-related function and therefore has no nuclear safety design basis.

9.3.4.1.2 Power Generation Design Basis

The secondary sampling system monitors water samples from the condensate, feedwater, main steam, heater drain, steam generator blowdown, auxiliary steam supply, and condensate polishing systems, as listed in Table 9.3.4-1 and Table 9.3.4-2. Water quality analyses are performed on these samples to determine the following:

- pH
- Conductivity levels (specific and cation)
- Dissolved oxygen level
- Residual oxygen scavenger
- Sodium content
- Sulfate content.

The sample analyses are used to control water chemistry and to permit appropriate corrective action.

9.3.4.2 System Description

Classification of equipment and components for the secondary sampling system is given in Section 3.2. The sample points listed in Table 9.3.4-1 are continuously monitored. The sample points listed in Table 9.3.4-2 are selectively monitored (where a single analyzer package can be used to selectively monitor multiple sample points).

Sample analysis data from the continuous analyzers is recorded using computer systems that also provide trending capability of the measured process parameters. Measurements are used to automatically control condensate and feedwater system pH and dissolved oxygen levels by chemical addition. Refer to Subsection 10.4.11 for further discussion of the turbine island chemical feed system.

Samples are analyzed and the results are used for automatic or manual control of the plant secondary water chemistry. After being analyzed, pure samples are returned to the condensate system. Sample lines containing reagents and those from sink drains are collected in the waste water system and processed for disposal. Each sample line has a grab sampling capability for laboratory analysis.

Roughing coolers are provided for the samples whose temperatures exceed 125°F. Samples are cooled to approximately 77°F by chilled water supplied to trim coolers.

9.3.4.3 Safety Evaluation

The secondary sampling system has no safety-related function and therefore requires no nuclear safety evaluation.

9.3.4.4 Tests and Inspections

Proper operation of the secondary sampling system is initially demonstrated during preoperational testing.

The system draws continuous and selective samples from the condensate, feedwater, main steam, and steam generator blowdown systems for automatic or manual water quality analysis. Calibration of the analyzers is checked periodically through laboratory analysis of a grab sample from the same process flow. The output of the continuous analyzers is recorded, and abnormal values are evaluated.

9.3.4.5 Instrumentation Applications

The secondary sampling system uses pressure, temperature, and flow indicators to facilitate operation and to verify sample conditions.

9.3.5 Equipment and Floor Drainage Systems

The equipment and floor drainage systems collect liquid wastes from equipment and floor drains during normal operation, startup, shutdown, and refueling. The liquid wastes are then transferred to appropriate processing and disposal systems.

Equipment and floor drainage is segregated according to the type of waste. Liquid wastes are classified and segregated for collection as follows:

- Radioactive liquid waste
- Nonradioactive liquid waste
- Chemical and detergent liquid waste
- Oily liquid waste

9.3.5.1 Design Basis

9.3.5.1.1 Safety Design Basis

The equipment and floor drainage systems are nonsafety-related and serve no safety-related function except for the backflow preventers in drain lines from containment cavities to the containment sump. No nuclear safety design basis is required except for the backflow preventers described in Section 11.2. Single active failures do not prevent the proper function of the safety-related backflow preventers.

The floor drainage systems and equipment are designed to prevent damage to safety-related systems, structures, and equipment. Safety-related components are not damaged as a result of equipment and floor drain components failure from a seismic event. Floor drainage systems and equipment single failures will not prevent the proper function of any safety-related equipment.

9.3.5.1.2 Power Generation Design Basis

Nonradioactive liquid waste sumps and drain tanks that can be potentially radioactive during normal plant operation are provided with sampling capabilities. There are no permanent connections between the radioactive drain system and nonradioactive piping. Provisions for temporary diversion of contaminated water from normally nonradioactive drains to the liquid radwaste system are included.

Equipment drains are adequately sized to meet the flow requirements.

Radioactive sump vents are directed to the ventilation system exhaust ducts, serving the areas where the sump is located. The containment sump vents directly to the containment.

Drainage systems are drained by gravity. The slope of the drain lines is 1/8 inch per foot as a minimum except for the embedded drain piping for area 2 of the auxiliary building, elevation 66'-6". At this level, the slope of the drain lines is 1/16 inch per foot minimum. The drainage systems are designed not to compromise the integrity of the areas maintained under a slight negative pressure during normal plant operation. This is achieved by avoiding cross connection with adjacent areas that are not maintained under a slight negative pressure.

Radioactive drain systems are designed to avoid crud traps and to minimize drain traps.

Sump and drain tank pumps discharge at a flowrate adequate to prevent sump overflow for drain rates anticipated during normal plant operation, maintenance, decontamination, fire suppression system testing, and fire fighting activities. Sump and drain tank capacities provide a live storage capacity consistent with an operating period of approximately 10 minutes with one pump operating as a minimum. The containment sump pumping time between high and low level is approximately 3 minutes.

Plugging of the drain headers is minimized by designing them large enough to accommodate more than the design flow and by making the flow path as straight as possible. Drain headers are at least 4 inches in diameter.

9.3.5.2 System Description

9.3.5.2.1 General Description

The drainage systems include collection piping, equipment drains, floor drains, vents, traps, cleanouts, sampling connections, valves, collection sumps, drain tanks, pumps, and discharge piping. The general arrangement of the drainage systems is shown on Figure 9.3.5-1.

Radioactive Wastes

The radioactive waste drain system is arranged to receive inputs from the radiologically controlled areas of the auxiliary, annex, and radwaste buildings based on segregation of the liquid wastes into chemical and nonchemical drains. The radioactive waste drain system collects radioactive liquid wastes at atmospheric pressure from equipment and floor drainage of the radioactive portions of the auxiliary building, annex building, and radwaste building and directs these wastes to a centrally located sump located in the auxiliary building. The contents of the sump are pumped to the liquid radwaste system tanks. Drainage lines from the negative pressure boundary areas of the auxiliary, radwaste, and annex buildings do not terminate outside the negative pressure boundary without a normally closed valve or plugged drain to maintain the integrity of the negative pressure boundary.

The liquid radwaste system collects radioactive and borated liquid wastes from equipment and floor drains in containment. Waste from the equipment drains inside containment is drained to the reactor coolant drain tank. The liquid waste from floor drains, fan coolers, and the containment wall gutter inside containment is drained to the containment sump. The contents of the drain tank and sump are pumped out of containment for processing by the liquid radwaste system. Refer to Section 11.2 for further details.

The sumps, pumps, and associated valves for the drain systems are located outside of high-radiation areas to the extent practical.

Nonradioactive and Potentially Radioactive Waste Drains

The waste water system collects nonradioactive waste from floor and equipment drains in auxiliary, annex, turbine, and diesel generator building sumps or tanks. Selected normally nonradioactive liquid waste sumps and tanks are monitored for radioactivity to determine whether the liquid wastes have

been inadvertently contaminated. If contaminated, the wastes are diverted to the liquid radwaste system for processing and ultimate disposal. Refer to Subsection 9.2.9 for further details. Drainage lines from the positive pressure boundary areas of the auxiliary building do not terminate outside the positive pressure boundary without a closed valve, plugged drain, or water seal to maintain the integrity of the positive pressure boundary.

Chemical Waste Drains

The radioactive waste drain system collects chemical wastes from the auxiliary building chemical laboratory and decontamination solution drains from the annex building and directs these wastes to the chemical waste tank of the liquid radwaste system.

Detergent Waste Drains

The laundry and respirator cleaning functions that generate detergent wastes are performed offsite. Detergent wastes from hot sinks and showers are routed to the chemical waste tank.

Oily Waste Drains

The waste water system collects nonradioactive, oily, liquid waste in drain tanks and sumps. Drain tank and sump liquid wastes are pumped through an oil separator prior to further processing. The oil is collected in a tank for disposal.

Sampling for oil in the waste holdup tank of the liquid radwaste system is provided to detect oil contamination before the ion exchanger resins are damaged. Oily water is pumped from the tank through an oil adsorbing bag filter before further processing. The spent bag filters are transferred to drums and stored in the radwaste building as described in Section 11.4.

9.3.5.2.2 Component Description

General description and summaries of the design requirements for these components are provided below. Key equipment parameters are contained in Tables 9.3.5-1 and 11.2-2. Principal construction codes and standards and the classification applicable to the floor and equipment drainage systems are listed in Section 3.2.

Sumps and Drain Tanks

In general, the inlet drain lines to the sump or drain tank are kept submerged a minimum of 6 inches below pump shutoff level to prevent backgassing. The containment sump inlet is submerged.

Sumps are covered to keep out debris. Covers are removable, or manholes are provided for access. The total capacity of each sump includes a 10 percent freeboard allowance to permit operation of high-high level alarms and associated controls before the overflow point is reached.

Each sump is fitted with a vent connection to exhaust potential sump gases into the VAS exhaust system. Nonradioactive drain tanks are vented to the atmosphere. The reactor coolant drain tank is vented to the gaseous radwaste system (Section 11.3). Where necessary for the control of airborne radioactivity, the sump vents are routed to the ventilation system exhaust duct for the room.

Radioactive sumps are stainless steel construction. Nonradioactive collection sumps are constructed of concrete with corrosion resistant coating or liner.

Sump and Drain Tank Pumps

Sumps outside containment are provided with air diaphragm pumps mounted on the sump cover plate. Pumps are equipped with reliable, mechanical diaphragms of demonstrated acceptable design that are easy to maintain. Pumps and associated piping connections and accessories are designed

for easy replacement of pump diaphragms. The containment sump pumps are described in Section 11.2. The turbine building sump pumps are described in Subsection 9.2.9.

Valves

Air-operated valves are provided for on/off functions of air supply to the sump pump diaphragms. Swing check valves, where provided, are installed in horizontal pipe runs. Pressure control valves are provided to control air supply pressure to the sump pump diaphragms. Manual ball valves are provided for maintenance purposes.

9.3.5.2.3 System Operation

The equipment and floor drainage systems operate during all modes of normal plant operation. Liquid wastes drain by gravity to collection tanks or sumps. Drainage flowrates vary based on the status of the plant. Sump pumps disposing of collected radioactive wastes discharge to the liquid radwaste system for further processing. Nonradioactive liquid wastes are discharged to the waste water system.

Pump operation is automatic with manual override. The pumps are automatically started and stopped by preset high, high-high, and low level instrumentation.

Where sumps are provided with two pumps, the capability is provided to allow equalizing the operational period of each pump. For the radioactive waste drain system, when the first pump is started on high level, a portion of the flow is recycled to allow recirculation of the flow through a mixing eductor.

The sump and drain tank pumps are not required to operate during design basis accidents. Sump pumps in the containment are interlocked with the associated containment isolation valves. The pumps trip and the isolation valves close on receipt of containment isolation signals (see Subsection 6.2.3).

The equipment and floor drainage systems can be operated either automatically or manually for cleanup following an accident, including fire, provided that the compressed and instrument air system and ac power are available, and the drainage systems and support systems are not disabled by the event.

9.3.5.2.4 Instrumentation Applications

Level indication is provided in the main control room for the sump in-containment to provide indication of the presence of reactor coolant from unidentified leaks (refer to Subsection 5.2.5). The sump and the drain tank outside containment are monitored for water level. On high sump or tank level, the solenoid-operated three-way valve for the selected pump is energized to admit air to the pump diaphragm. On high-high sump or tank level, the solenoid-operated three-way valve for the remaining pump is also energized to admit air to that pump diaphragm. On low level, both pumps are stopped by deenergizing their respective solenoid valves. Operating status of the pumps is provided to the plant control system.

9.3.5.3 Safety Evaluation

The equipment and floor drainage systems are nonsafety-related except for backflow preventers in drain lines from containment cavities to the containment sump. No nuclear safety evaluation is required other than that described for the backflow preventers in Section 11.2.

9.3.5.4 Tests and Inspections

The operability of equipment and floor drainage systems dependent upon gravity flow can be checked by normal usage. Portions of these systems dependent upon pumps to discharge to interfacing systems may be checked through instrumentation and alarms via the plant control system and trouble alarms in the main control room during operation or test.

9.3.6 Chemical and Volume Control System

The chemical and volume control system is designed to perform the following major functions:

- **Purification** - maintain reactor coolant system fluid purity and activity level within acceptable limits.
- **Reactor coolant system inventory control and makeup** - maintain the required coolant inventory in the reactor coolant system; maintain the programmed pressurizer water level during normal plant operations.
- **Chemical shim and chemical control** - maintain the reactor coolant chemistry conditions by controlling the concentration of boron in the coolant for plant startups, normal dilution to compensate for fuel depletion and shutdown boration, and provide the means for controlling the reactor coolant system pH by maintaining the proper level of lithium hydroxide.
- **Oxygen control** - provide the means for maintaining the proper level of dissolved hydrogen in the reactor coolant during power operation and for achieving the proper oxygen level prior to startup after each shutdown.
- **Filling and pressure testing the reactor coolant system** - provide the means for filling and pressure testing the reactor coolant system. The chemical and volume control system does not perform hydrostatic testing of the reactor coolant system, which is only required prior to initial startup and after major, nonroutine maintenance, but provides connections for a temporary hydrostatic test pump.
- **Borated makeup to auxiliary equipment** - provide makeup water to the primary side systems that require borated reactor grade water.
- **Pressurizer Auxiliary Spray** - provide pressurizer auxiliary spray water for depressurization.

9.3.6.1 Design Bases

9.3.6.1.1 Safety Design Basis

The safety functions provided by the chemical and volume control system are limited to containment isolation of chemical and volume control system lines penetrating containment, termination of inadvertent reactor coolant system boron dilution, isolation of makeup on a steam generator or pressurizer high level signal, and preservation of the reactor coolant system pressure boundary, including isolation of normal chemical and volume control system letdown from the reactor coolant system.

9.3.6.1.2 Power Generation Design Basis

The principal functions of the chemical and volume control system are outlined above and include controlling reactor coolant system chemistry, purity, and inventory. The system provides some functions necessary for the continued normal operation of the plant. Reliability is achieved by the use

of redundant equipment (pumps, filters, and demineralizers). The equipment classification for the chemical and volume control system is contained in Section 3.2.

9.3.6.1.2.1 Purification

The chemical and volume control system removes radioactive corrosion products, ionic fission products, and fission gases from the reactor coolant system to maintain low reactor coolant system activity levels. The chemical and volume control system purification capability considers occupational radiation exposure (ORE) to support ALARA goals.

The chemical and volume control system is designed to maintain the reactor coolant system activity level at less than the technical specification limit for normal operations, with design basis fuel defects. The technical specifications allow these limits to be exceeded for a specified duration. See Chapter 16.

The purification rate is based on minimizing occupational radiation exposure and providing access to the reactor coolant system equipment. The chemical and volume control system provides a reactor coolant system purification rate of at least one reactor coolant system mass per 16 hours.

The chemical and volume control system has sufficient reactor coolant system purification and degasification capability (in conjunction with the liquid radwaste system) to allow the reactor vessel head to be removed in a timely manner during a refueling shutdown. In addition, purification during shutdowns has positive impact on the occupational radiation exposure to workers during the outage. The chemical and volume control system supports the plant ALARA goals with the shutdown purification function.

9.3.6.1.2.2 Reactor Coolant System Inventory Control and Makeup

The chemical and volume control system provides a means to add and remove mass from the reactor coolant system, as required, to maintain the programmed inventory during normal plant operations. Operations that are accommodated include startup, shutdown, step load changes, and ramp load changes.

The chemical and volume control system is capable of maintaining a constant volume in the reactor coolant system while the plant is being heated up or cooled down. During a heatup it is necessary to remove reactor coolant system mass due to expansion. The maximum rate of net expansion occurs at the end of the heatup, so the limiting case is based on controlling the pressurizer level during this phase of operation. This expansion is accommodated by the normal letdown path. During cooldown, it is necessary to add mass due to reactor coolant system shrinkage. The chemical and volume control system is capable of maintaining the minimum pressurizer level with makeup during cooldown from hot zero power to cold shutdown while maintaining normal purification flow. Ramp and step load changes, as well as load rejections, are accommodated by the reactor coolant system pressurizer level control system. The chemical and volume control system can function to accommodate normal pressurizer level control system makeup and letdown requirements.

The chemical and volume control system is designed to make up for leaks, including leaks up to 3/8-inch inside diameter and for anticipated steam generator tube leaks, allowing the plant to be taken to cold shutdown conditions without the use of safety-related makeup systems.

9.3.6.1.2.3 Chemical Shim and Chemical Control

The chemical and volume control system provides the means to vary the boron concentration in the reactor coolant system. The system also controls the reactor coolant system chemistry for the purpose of limiting corrosion and enhancing core heat transfer.

Chemical Shim

The concentration of boron in the reactor coolant system is changed, as required, to maintain the desired control rod position with core depletion. The chemical and volume control system has the capacity to accommodate a cold shutdown followed by a return to power at the end of core life and also (as an independent case) to borate the plant to cold shutdown immediately following return to power from refueling. The system has boration and dilution capacity to meet these requirements, as well as the capability to transfer effluents to other systems.

The chemical and volume control system boric acid solutions are stored at concentrations that do not require heat tracing or room temperatures above normal values. The 2.5 weight percent boric acid solution requires freeze protection but does not impose special ambient temperature requirements.

pH Control

Lithium hydroxide (Li7OH) is used to control the pH of the reactor coolant system. The required concentration of Li7OH is varied to minimize the formation of tritium.

9.3.6.1.2.4 Oxygen Control

The chemical and volume control system maintains the proper conditions in the reactor coolant system to minimize corrosion of the fuel and primary surfaces. During power operations, dissolved hydrogen is added to the reactor coolant system to eliminate free oxygen and to prevent ammonia formation. The chemical and volume control system is capable of maintaining the concentration of dissolved hydrogen in the reactor coolant system at a minimum of 25 cubic centimeters hydrogen, at standard temperature and pressure, per kilogram of coolant, assuming anticipated operating losses.

This concentration can be reduced to 15 cc/kg within 24 hours prior to shutdown. Prior to opening the reactor coolant system during a cold or refueling shutdown, the hydrogen concentration is reduced to approximately 5 cubic centimeters per kilogram. To prevent delays, the chemical and volume control system (in conjunction with the liquid radwaste system) is capable of making this 15 to 5 cubic centimeters per kilogram reduction within the time to achieve normal plant cooldown.

During plant startup from cold shutdown, the chemical and volume control system introduces an oxygen scavenger into the reactor coolant system. The solution is only used for oxygen control at low reactor coolant system temperatures during startup from cold shutdown conditions. At other times during plant operation, hydrogen is used for oxygen control.

9.3.6.1.2.5 Filling and Pressure Testing the Reactor Coolant System

The chemical and volume control system provides a means for filling and pressure testing the reactor coolant system. The chemical and volume control system also provides connections for a temporary hydrostatic test pump.

9.3.6.1.2.6 Borated Makeup

The chemical and volume control system provides makeup to the passive core cooling system accumulators, core makeup tanks, in-containment refueling water storage tank, and to the spent fuel pool at various boron concentrations.

9.3.6.2 System Description

The chemical and volume control system consists of regenerative and letdown heat exchangers, demineralizers and filters, makeup pumps, tanks, and associated valves, piping, and instrumentation.

The system parameters are given in Table 9.3.6-1. The piping and instrumentation diagram for the chemical and volume control system is included as Figure 9.3.6-1.

9.3.6.2.1 Purification

9.3.6.2.1.1 Ionic Purification

The normal chemical and volume control system purification loop is inside containment and operates at reactor coolant system pressure, utilizing the developed head of the reactor coolant pumps as the motive force for the purification flow. During power operations, fluid is continuously circulated through the chemical and volume control system from the discharge of one of the reactor coolant pumps. It passes through the regenerative heat exchanger where it is cooled by the returning chemical and volume control system flow, and is further cooled by component cooling water in the letdown heat exchanger to a temperature compatible with the demineralizer resins. The purification fluid flows through a mixed bed demineralizer, optionally through a cation bed demineralizer, and through a filter. It returns to the suction of a reactor coolant pump after being heated in the regenerative heat exchanger. The purification loop operates at reactor coolant system pressure.

Since the motive force for the purification loop is the reactor coolant pump head in a closed loop with the reactor coolant system, continuous purification is provided without operating the chemical and volume control system makeup pumps.

The mixed bed demineralizers are provided in the purification loop to remove ionic corrosion products and certain ionic fission products; they also remove zinc during periods of zinc addition. The demineralizers also act as filters. One mixed bed is normally in service, with a second demineralizer acting as backup in case the normal unit should become exhausted during operation. Each demineralizer and filter is sized to provide a minimum of one fuel cycle of service without changeout.

The mixed bed demineralizer in service can be supplemented by intermittent use of the cation bed demineralizer for additional purification in the event of fuel defects. In this case, the cation resin removes mostly lithium and cesium isotopes. The cation bed demineralizer has sufficient capacity to maintain the cesium-136 concentration in the reactor coolant below 1.0 microcurie per cubic centimeter with design basis fuel defects. Each mixed bed and the cation bed demineralizer is sized to accept the maximum purification flow. Filters are provided downstream of the demineralizers to collect particulates and resin fines.

During plant shutdowns when the reactor coolant pumps are stopped, the normal residual heat removal system provides the motive force for the chemical and volume control system purification. Purification flow from the normal residual heat removal system heat exchanger is routed directly through the normal chemical and volume control system purification loop. Boron changes and dissolved gas control are still possible by operating the chemical and volume control system in a semiclosed loop arrangement.

9.3.6.2.1.2 Gaseous Purification

Removal of radiogases from the reactor coolant system are not normally necessary because the gases do not build up to unacceptable levels when fuel defects are within normally anticipated ranges. If radiogas removal is required because of high fuel defects, the chemical and volume control system can be operated by routing flow to the liquid radwaste system degassifier. In this configuration, the letdown fluid is depressurized by flowing through the letdown orifice. The letdown flow is routed outside of containment through the liquid radwaste system degassifier to one of the liquid radwaste system effluent holdup tanks, and then returned to the reactor coolant system with the chemical and volume control system makeup pumps. This provides efficient gas removal.

Removal of radioactive gas and hydrogen during shutdown operations is necessary to avoid extending the maintenance and refueling outages. The reactor coolant system pressure boundary cannot be opened to the containment atmosphere until the gas concentrations are reduced to low levels. The shutdown degassing process is accomplished by operating the chemical and volume control system in the open loop configuration. In addition, a line is provided to allow the letdown orifice to be manually bypassed, so gas removal can continue after the reactor coolant system has been depressurized.

9.3.6.2.2 Reactor Coolant System Inventory Control and Makeup

Changes in reactor coolant volume are accommodated by the pressurizer level program for normal power changes, including transition from hot standby to full-power operation and returning to hot standby. In addition, the pressurizer has sufficient volume, within the deadband of the level control program, to accommodate minor reactor coolant system leakage for some time. The chemical and volume control system provides inventory control to accommodate minor leakage from the reactor coolant system, expansion during heatup from cold shutdown, and contraction during cooldown. This inventory control is provided by letdown and makeup connections to the chemical and volume control system purification loop.

9.3.6.2.3 Chemical Shim and Chemical Control

The chemical and volume control system provides the following functions to support the water chemistry and chemical shim requirements of the reactor coolant system:

- Means of addition and removal of pH control chemicals for startup and normal operation.
- Means of addition and removal of soluble chemical neutron absorber (boron) and makeup water, at concentrations and rates compatible with normal plant operation.

Reactor coolant system chemistry changes are accomplished with a feed and bleed operation. The letdown and makeup paths are operated simultaneously and appropriate chemicals are provided at the suction of the reactor makeup pumps.

9.3.6.2.3.1 Chemical Shim

Reactor coolant system boron changes are required to compensate for fuel depletion, startups, shutdowns, and refueling.

To borate the reactor coolant system, the operator sets the makeup control system to automatically add a preset amount of boric acid by fully diverting the three-way valve in the pump suction line to the boric acid storage tank, with delivered flow measured at the discharge of the makeup pumps. Dilution operates in a similar fashion. In either case, if the pressurizer level exceeds its control point, the letdown path to the liquid radwaste system holdup tanks is automatically opened.

Boric acid is provided to the boric acid storage tank by mixing 2.5 weight percent boric acid solution in the boric acid batching tank. Boric acid crystals are mixed with a mixer, while the mixture is heated to an appropriate temperature to provide efficient mixing by the batching tank immersion heater. After the boric acid crystals are dissolved, the solution is drained by gravity into the boric acid storage tank. No provisions are incorporated for boric acid recycle from the liquid radwaste system.

9.3.6.2.3.2 pH Control

The chemical agent used for pH control is lithium hydroxide (Li7OH). This chemical is chosen for its compatibility with the material and water chemistry of borated water, stainless steel, and zirconium

systems. In addition, lithium-7 is produced in the core region because of irradiation of the dissolved boron in the coolant. A chemical mixing tank is provided to introduce the solution to the suction of the makeup pumps as required to maintain the proper concentration of Li7OH in the reactor coolant system.

The solution is poured into the chemical mixing tank and is then flushed to the suction manifold of the makeup pumps with demineralized water. A flow orifice is provided on the demineralized water inlet pipe to allow chemicals to be flushed into the reactor coolant system at acceptable concentrations.

The concentration of lithium-7 in the reactor coolant system varies according to a pH control curve as a function of the boric acid concentration of the reactor coolant system. If the concentration exceeds the proper value, as it may during the early stages of core life when lithium-7 is produced in the core at a relatively high rate, the cation bed demineralizer is used in the letdown path in series with the mixed bed demineralizer to lower the lithium-7 concentration. Since the buildup of lithium is slow, the cation bed demineralizer is used only intermittently. When letdown is being diverted to the liquid radwaste system, the purification flow is routed through the cation bed demineralizer for removal of as much lithium-7 and cesium as possible.

9.3.6.2.3.3 Zinc Addition

A soluble zinc compound may be added to the coolant as a means to reduce radiation fields within the primary system and to reduce the potential for crud-induced power shift (CIPS). The zinc used may be either natural zinc or zinc depleted of ^{64}Zn.

9.3.6.2.4 Oxygen Control

The chemical and volume control system provides control of the reactor coolant system oxygen concentration, both during startup by introducing an oxygen scavenger and during power operations by driving toward zero the equilibrium concentration of oxygen produced by radiolysis in the core by injecting hydrogen.

9.3.6.2.4.1 Startups

During plant startup from cold conditions, an oxygen scavenging agent is used. The oxygen scavenger solution is introduced into the reactor coolant system via the makeup flow and chemical mixing tank, in the same manner as described for lithium-7 addition. The oxygen scavenger is used for oxygen control only at startup from cold shutdown conditions.

9.3.6.2.4.2 Power Operation

Dissolved hydrogen is employed during normal power operation to control and scavenge oxygen produced due to radiolysis of water in the core region. Hydrogen makeup is supplied to the reactor coolant system by direct injection of high-pressure gaseous hydrogen. The hydrogen comes from a bottle outside containment, through a containment penetration, and is mixed in the chemical and volume control system purification loop. Hydrogen removal from the reactor coolant system is not necessary because hydrogen is consumed in the core.

9.3.6.2.5 Reactor Coolant System Filling and Pressure Testing

Reactor coolant system filling is accomplished by using the chemical and volume control system makeup pumps to provide fluid at the proper boron concentration (refueling), taking suction from both the boric acid storage tank and the demineralized water tank. The makeup pumps can also take suction from a clean liquid radwaste system holdup tank by opening the line to the makeup pumps from that holdup tank.

The chemical and volume control system makeup pumps produce sufficient head to pressure test the reactor coolant system after maintenance and refueling.

A temporary hydrotest pump is required for initial hydrotesting, which requires higher pressures than can be achieved with the makeup pumps.

9.3.6.2.6 Borated Makeup

The makeup pumps are used to provide makeup at the proper boron concentration to the passive core cooling system accumulators, core makeup tanks, in-containment refueling water storage tank, and to the spent fuel pool. Makeup to these locations is at boric acid concentration as required, which can be varied from 0 to 4375 parts per million (2.5 weight percent). A mixture of 2.5 weight percent boric acid and demineralized water is provided by taking suction from both the boric acid storage tank and the demineralized water tank.

9.3.6.3 Component Descriptions

The general descriptions and summaries of the chemical and volume control system components are provided below. The key equipment parameters for the chemical and volume control system components are contained in Table 9.3.6-2. Information regarding component classifications is available in Section 3.2. See Section 5.2 for additional information on analysis requirements.

9.3.6.3.1 Chemical and Volume Control System Makeup Pumps

Two centrifugal makeup pumps are provided. These pumps are driven by ac motors, and flow is controlled by positioning a control valve in the common discharge line from the pumps. A cavitating venturi in the common discharge line limits the makeup flow and provides protection from excessive pump runout. Each pump has a recirculation loop with a heat exchanger and flow control orifice to provide adequate minimum flow for pump protection. The mini-flow heat exchanger is cooled by component cooling water.

The makeup pumps are arranged in parallel with common suction and discharge headers. Each provides full capability for normal makeup; thus, there is redundancy for normal operations. The normal makeup pump suction fluid comes from the boric acid storage tank and the demineralized water connection. A three-way valve in the suction header is positioned to provide a full range of concentrations.

One makeup pump is capable of maintaining normal reactor coolant system inventory with leaks up to a 3/8-inch inside diameter, without an actuation of the safety injection systems. The second pump can be manually started to provide additional reactor coolant makeup.

These pumps are used to pressure test the reactor coolant system.

Parts of the pump in contact with reactor coolant are constructed of austenitic stainless steel. The pump motor and lube oil are air-cooled.

9.3.6.3.2 Chemical and Volume Control System Heat Exchangers

Letdown Heat Exchanger

One single-shell pass U-tube letdown heat exchanger is provided. The heat exchanger is designed to cool the purification loop flow from the regenerative heat exchanger outlet temperature to the desired letdown temperature allowing the letdown to be processed by the demineralizers while maximizing the thermal efficiency of the chemical and volume control system.

The letdown heat exchanger outlet temperature is controlled by the operator by remotely positioning a component cooling system flow control valve.

The reactor coolant in the purification loop flows through the tubes, which are stainless steel, and component cooling water flows through the shell, which is carbon steel.

Miniflow Heat Exchangers

Two miniflow heat exchangers are provided, one in each makeup pump miniflow recirculation line. Each heat exchanger is designed to cool the flow through the chemical and volume control system makeup pump minimum flow recirculation lines to the desired temperature for pump protection. The makeup water flows through the tubes, which are stainless steel, and component cooling water flows through the shell, which is carbon steel.

Regenerative Heat Exchanger

One regenerative heat exchanger is provided. This heat exchanger is used to recover heat from the purification loop flow leaving the reactor coolant system by reheating the fluid entering the reactor coolant system. This provides increased thermal efficiency and also reduces thermal stresses on the reactor coolant system.

The design basis for this heat exchanger is the last hour of plant heatup, when expansion of the reactor coolant system requires a net removal of inventory. For this case the regenerative heat exchanger outlet temperature must be low enough to allow the letdown heat exchanger to cool the letdown to the desired temperature with anticipated cooling water temperatures.

The reactor coolant leaving the reactor coolant system flows through the tube side of this heat exchanger, and the returning fluid flows through the shell. This arrangement places the cleaner fluid on the shell side and the lower quality fluid on the tube side, where there are fewer crevices available for crud deposition.

9.3.6.3.3 Chemical and Volume Control System Tanks

Boric Acid Storage Tank

One boric acid storage tank is provided. The tank is sized to allow for one shutdown to cold shutdown followed by a shutdown for refueling at the end of the fuel cycle.

The tank is vented to the atmosphere. Relatively little boric acid is used during power operation, since load follow is accomplished with gray rods and without changes in the reactor coolant system boron concentration. Therefore, the boric acid which is injected has a negligible effect on the free oxygen level in the reactor coolant system.

The tank is a free-standing stainless steel cylindrical design, located outside of the buildings, with only normal freeze protection required to maintain solubility of the 2.5 weight percent boric acid.

Boric Acid Batching Tank

The boric acid batching tank is a cylindrical tank with an immersion heater used in the preparation of 2.5 weight percent boric acid. A mixer is included with the tank. The tank is constructed of austenitic stainless steel and is provided with fill, vent and drain connections.

Chemical Mixing Tank

The chemical mixing tank is a small vertical, cylindrical tank sized to provide sufficient capacity for injecting an oxygen scavenger solution necessary to provide a concentration of ten parts per million in the cold reactor coolant system for oxygen scavenging.

A variety of chemicals to be added to the primary system are mixed in the tank. The solution to be injected is placed into the mixing tank and then flushed to the suction of the makeup pumps with demineralized water.

The tank is constructed of austenitic stainless steel and is provided with fill, vent, and drain connections.

9.3.6.3.4 Chemical and Volume Control System Demineralizers

Cation Bed Demineralizer

One cation resin bed demineralizer is located downstream of the mixed bed demineralizers and is used intermittently to control the concentration of lithium-7 (pH control) in the reactor coolant system. The demineralizer is sized to accommodate maximum purification flow when in service, which is adequate to control the lithium-7 and/or cesium concentration in the reactor coolant.

The demineralizer vessel is designed for reactor coolant system pressure and is constructed of austenitic stainless steel, with connections for resin addition, replacement, flushing, and draining. The vessel incorporates a retention screen, an inflow screen, and mesh screens on the drain connections. The screens are designed to retain the resin with minimum pressure drop. The inflow screen prevents inadvertent flushing of the resin into the purification loop through the demineralizer inlet and also deflects the incoming flow to preserve a smooth resin bed.

Mixed Bed Demineralizers

Two mixed bed demineralizers are provided in the purification loop to maintain reactor coolant purity. A mixture of lithiated cation and anion resin is used in the demineralizer. Both forms of resin remove fission and corrosion products. Each demineralizer is sized to accept the full purification flow during normal plant operation and to have a minimum design life of one core cycle.

The construction of the mixed bed demineralizers is identical to that of the cation bed demineralizer.

9.3.6.3.5 Chemical and Volume Control System Filters

Makeup Filter

One makeup filter is provided to collect particulates in the makeup stream, such as boric acid storage tank sediment. The filter is designed to accept maximum makeup flow. The unit is constructed of austenitic stainless steel with a disposable synthetic cartridge and is designed for reactor coolant system hydrostatic test pressure.

Reactor Coolant Filters

Two reactor coolant filters are provided. The filters are designed to collect resin fines and particulate matter from the purification stream. Each filter is designed to accept maximum purification flow.

The units are constructed of austenitic stainless steel with disposable synthetic cartridges and are designed for reactor coolant system pressure.

9.3.6.3.6 Chemical and Volume Control System Letdown Orifice

One letdown orifice is provided in the letdown line, where fluid leaves the high-pressure purification loop before it exits containment. The orifice limits the letdown flow to a rate compatible with the chemical and volume control system equipment and also plant heatup and dilution requirements.

The orifice consists of an assembly that provides for permanent pressure loss without recovery and is made of austenitic stainless steel.

A manual bypass line is provided around the orifice to allow shutdown purification and degassing when the reactor coolant system pressure is low.

9.3.6.3.7 Chemical and Volume Control System Valves

The chemical and volume control system valves are stainless steel for compatibility with the borated reactor coolant. Isolation valves are provided at connections to the reactor coolant system. Lines penetrating the reactor containment meet the containment isolation criteria described in Subsection 6.2.3.

Purification Stop Valves

These normally open, motor-operated valves are located inside containment and close automatically on a low pressurizer level signal from the protection and safety monitoring system to preserve reactor coolant pressure boundary and to prevent uncovering of the heater elements in the pressurizer. The valves fail "as is" on loss of power and manual control (open/auto/close) is provided in the main control room and at the remote shutdown workstation.

Letdown Flow Inside Containment Isolation Valve

This normally closed, fail closed, air-operated globe valve is located inside containment and isolates letdown to the liquid radwaste system. This valve automatically opens and closes on a plant control system signal from the pressurizer level control or a containment isolation signal from the protection and safety monitoring system. It automatically opens on high pressurizer level and closes when the pressurizer level returns to normal. It also closes on a high-high liquid radwaste system degassifier level or a containment isolation signal. This valve operator has a flow restricting orifice in the vent line so it closes more slowly than the letdown flow outside containment isolation valve. Manual control is also provided in the main control room and at the remote shutdown workstation.

Letdown Flow Outside Containment Isolation Valve

This normally closed, fail closed, air-operated globe valve is located outside containment and isolates letdown to the liquid radwaste system. This valve automatically opens and closes on a plant control system signal from the pressurizer level control system or a containment isolation signal from the protection and safety monitoring system. This valve operates in the same fashion as the letdown flow inside containment isolation valve. The letdown flow outside containment isolation valve closes more quickly than inside containment letdown flow isolation valve to limit seat wear of inside containment isolation valve. This valve operator has a flow restricting orifice in the air line, so it opens more slowly than inside containment letdown flow isolation valve. In addition, during brief periods of shutdown, when the reactor coolant system is water solid, this valve throttles to maintain the reactor coolant system pressure. Manual control is also provided in the main control room and at the remote shutdown workstation.

Makeup Stop Valve

This normally open, air-operated stop check valve is located inside containment and functions to isolate the flow in the charging line to the reactor coolant system. This valve can be closed from the main control room or the remote shutdown workstation to isolate charging downstream of the regenerative heat exchanger. This valve is closed to support the auxiliary spray function. The valve fails open on loss of power or loss of instrument air so the charging line to the reactor coolant system remains available.

Auxiliary Spray Line Isolation Valve

This normally closed, air-operated globe valve is located inside containment, downstream of the regenerative heat exchanger, and functions to isolate the auxiliary spray line to the reactor coolant system pressurizer. This valve is opened to provide flow to the auxiliary spray line during heatups and cooldowns to add chemicals or to collapse the steam bubble in the pressurizer. This valve fails closed on a loss of power or loss of instrument air to accomplish the function of preserving the reactor coolant pressure boundary. This valve closes automatically on a low-1 pressurizer level signal from the protection and safety monitoring system to preserve reactor coolant pressure boundary. This valve is operated from the main control room and the remote shutdown workstation.

Makeup Line Containment Isolation Valves

These normally open, motor-operated globe valves provide containment isolation of the chemical and volume control system makeup line and automatically close on a high-2 pressurizer level, high steam generator level, or high-2 containment radiation signal from the protection and safety monitoring system. The valves close on a source range flux doubling signal to terminate possible unplanned boron dilution events. The valves also close on a safeguards actuation signal coincident with high-1 pressurizer level. This allows the chemical and volume control system to continue providing reactor coolant system makeup flow, if the makeup pumps are operating following a safeguards actuation signal. These valves are also controlled by the reactor makeup control system and close when makeup to other systems is provided. Manual control is provided in the main control room and at the remote shutdown workstation.

Hydrogen Addition Containment Isolation Valve

This normally open, fail closed, air-operated globe valve is located outside containment in the hydrogen addition line. The valve automatically closes on a containment isolation signal from the protection and safety monitoring system. Manual control is provided in the main control room and at the remote shutdown workstation.

Demineralized Water System Isolation Valves

These normally open, air-operated butterfly valves are located outside containment in the line from the demineralized water storage and transfer system. These valves close on a signal from the protection and safety monitoring system derived by either a reactor trip signal, a source range flux doubling signal, low input voltage (loss of ac power) to the 1E dc and uninterruptable power supply system battery chargers, or a safety injection signal, isolating the demineralized water source to prevent inadvertent boron dilution events and, during shutdown conditions, whenever the flux doubling signal is blocked to prevent inadvertent boron dilution. Manual control for these valves is provided from the main control room and at the remote shutdown workstation.

Makeup Pump Suction Header Valve

This air-operated, three-way valve is automatically controlled by the makeup control system to provide the desired boric acid concentration of makeup to the reactor coolant system (boric acid, demineralized water, or blend based on the desired reactor coolant system boron concentration). The valve fails with the pump suction aligned to the boric acid storage tank on a loss of instrument air. This valve will also align to the boric acid storage tank on either a reactor trip, source range flux doubling signal, low input voltage (loss of ac power) to the 1E dc and uninterruptable power supply system battery chargers, or a safety injection signal from the protection and safety monitoring system. This valve also aligns the makeup pump suction to the boric acid storage tank when low pressure is detected in the demineralized water supply line to protect the pump from a loss of suction supply. Manual control for this valve is provided in the main control room and at the remote shutdown workstation.

Makeup Pump Suction Relief Valves

A relief valve is provided in the suction of each makeup pump to prevent overpressurization of the pump suction. These relief valves prevent overpressurization that might be caused by backleakage through the makeup pump discharge check valves when the pump suction valves are closed. The set pressure of these relief valves is equal to the pump suction design pressure. The relief capacity is sufficient to accommodate expected check valve back leakage rates.

Letdown Line Relief Valve

A relief valve is provided to prevent overpressurization of the letdown line connected to the waste processing system. This relief valve prevents overpressurization that might be caused by opening the letdown line with a closed valve in the waste processing system. The set pressure of this relief valve is equal to the design pressure of the line connecting to the waste processing system. The relief capacity is sufficient to accommodate a conservatively high letdown rate assuming minimum flow resistances in the piping, valves, orifices and equipment in the letdown line.

Letdown Line Containment Isolation Thermal Relief Valve

A relief valve is provided to prevent overpressurization of the letdown line containment penetration. This relief valve prevents overpressurization that might be caused by thermal expansion of the fluid between the containment isolation valves following an event causing containment isolation. This relief valve is located inside containment.

Resin Sluice Line Relief Valve

A relief valve is provided to prevent overpressurization of the line that is used to sluice resin from the mixed bed and cation bed demineralizers to the waste processing system. The set pressure of this relief valve is equal to the design pressure of the line it is connected to which is equal to the design pressure of the CVS purification equipment inside containment. The relief capacity is sufficient to accommodate thermal expansion of the water that is trapped between the two containment isolation valves that might occur following an accident that results in heatup of the containment.

9.3.6.3.8 Piping Requirements

The chemical and volume control system piping that handles radioactive liquid is made of austenitic stainless steel. The piping joints and connections are welded, except where flanged connections are required for equipment removal for maintenance and hydrostatic testing.

9.3.6.4 System Operation and Performance

The operation of the chemical and volume control system for the various modes of reactor plant operation is described in the following subsections.

9.3.6.4.1 Plant Startup

Plant startup is the operation that brings the reactor plant from a cold shutdown condition to no-load operating temperature and pressure, and subsequently to power operation.

The makeup pumps initially fill the reactor coolant system via the purification flow return line. During filling, makeup water is drawn from the demineralized water connection and blended with boric acid from the boric acid storage tank to provide makeup at the desired reactor coolant system boron concentration. The reactor coolant system is vented via the reactor vessel head and the pressurizer. A vacuum fill subsystem may be used to enhance the reactor coolant fill operation.

The auxiliary spray line may be used to fill the pressurizer and establish proper water chemistry in the pressurizer. If water solid operation is desired, reactor coolant system pressure is controlled by operation of the letdown control valve and the makeup control valve. To accomplish this, a letdown flow path is established to the liquid radwaste system with the letdown orifice bypassed. The makeup flow rate is maintained by the makeup control valve at a constant value selected by the operators. At the same time, the letdown control valve controls letdown flow to maintain reactor coolant system pressure at a constant value, also selected by the operators. These water solid operations are not required if vacuum fill is used.

After the reactor coolant pumps are started, chemical treatment, using an oxygen scavenger, is performed. The oxygen scavenger is added to the reactor coolant during the initial stages of heatup to scavenge oxygen in the system. Subsequently, hydrogen makeup to the reactor coolant system is started, and the reactor coolant system hydrogen level is brought up to the normal operating point of approximately 30 cubic centimeters per kilogram.

The pressurizer heaters are used to heat up the water in the pressurizer and draw a steam bubble. As the steam bubble grows, effluent continues to be diverted to the liquid radwaste system through the chemical and volume control system letdown line. The makeup pumps are operated to supply demineralized water, so the reactor coolant system boron concentration is reduced to the level required for criticality. Following attainment of pressurizer normal water level, the letdown flow control valve and the makeup pumps are set to operate only as necessary to maintain pressurizer level or on demand from the operator.

Criticality is achieved as follows:

- The reactor coolant system boron concentration is reduced to the calculated level by dilution, routing effluent from the chemical and volume control system purification loop to the liquid radwaste system, and by providing unborated makeup with the makeup pumps taking suction from the demineralized water storage tank.
- Chemical analysis is used to measure water quality, boron concentration, and hydrogen concentration.
- Appropriate control rods are withdrawn.
- Further adjustments in boron concentration are made to establish preferred control group rod positions.

9.3.6.4.2 Normal Operation

Normal operation consists of operation at steady power (base load) level, load follow operation, and hot standby.

9.3.6.4.2.1 Base Load Operation

At a constant power level, the chemical and volume control system purification loop operates continuously as a closed loop around a reactor coolant pump. The purification flow is approximately 100 gallons per minute with one mixed bed demineralizer and one reactor coolant filter in service. The chemical and volume control system makeup pumps and the letdown line to the liquid radwaste system are not normally operating. The makeup pumps are normally available and are set to start automatically on low pressurizer level. The boric acid blending valve in the pump suction permits the operator to preset the blend of boric acid and demineralized water to achieve the desired makeup concentration. The letdown control valve opens automatically, if the pressurizer level reaches its high

(relative to programmed level) setpoint. Reactor coolant samples are taken to check boron and H_2 concentration, water quality, pH, and activity level.

Variations in power demand are accommodated automatically by control rod and gray rod movement. The only adjustments in boron concentration necessary are those to compensate for core burnup. These adjustments are made to maintain the rod control groups within their allowable limits by setting the makeup pumps to provide the required amount of demineralized water as makeup. If necessary, effluent is automatically routed to the liquid radwaste system to maintain the required pressurizer level.

9.3.6.4.2.2 Load Follow Operation

Load follow power changes and the resulting xenon changes are accommodated by the control rods and gray rods, with no changes required to the reactor coolant system boron concentration. The chemical and volume control system does not have load follow functions.

9.3.6.4.3 Plant Shutdown

9.3.6.4.3.1 Hot Shutdown

If required for periods of maintenance or following spurious reactor trips, the reactor is maintained subcritical, with the capability to return to full power within the period of time required to withdraw the control rods. During hot standby operation, the average temperature is maintained at no-load T_{avg} by initially dumping steam to the condenser to provide residual heat removal, or at later stages by running the reactor coolant pumps to maintain system temperature.

Initially the control rods are inserted and the core is maintained at or slightly above the minimum required shutdown margin. Following shutdown, xenon buildup occurs and increases the shutdown margin. The effect of xenon buildup increases the shutdown margin to a minimum of about 3 percent $\Delta k/k$ at about 9 hours following shutdown.

If rapid recovery is required, dilution of the system may be performed to counteract this xenon buildup. A shutdown group of rods is withdrawn during dilution to provide the capability for rapid shutdown if needed, and frequent checks are made on critical rod position.

9.3.6.4.3.2 Cold Shutdown

Cold shutdown is the operation that brings the reactor plant from normal operating temperature and pressure to a cold shutdown temperature and pressure for maintenance or refueling.

The chemical and volume control system purification loop continues to operate normally in advance of a planned shutdown. In addition, in the beginning of a shutdown, the chemical and volume control system is designed so the letdown flow is routed out of containment to the liquid radwaste system, where it is stripped of gases and returned to the makeup pump suction. This gas stripping is required for approximately 48 hours to reduce reactor coolant activity level and hydrogen level sufficiently, permitting personnel access for refueling or maintenance operations.

Before cooldown and depressurization of the reactor coolant system is initiated, the reactor coolant boron concentration is increased to the cold shutdown value. The operator sets the reactor makeup control to "borate" and selects the volume of boric acid solution necessary to perform the boration. Correct concentration is verified by reactor coolant samples. The operator sets the reactor makeup control for makeup at the shutdown reactor coolant boron concentration.

Contraction of the coolant during cooldown of the reactor coolant system results in actuation of the pressurizer level control system to maintain normal pressurizer water level. Makeup continues to be automatic, with the makeup pumps starting and stopping as required.

During shutdowns, after the reactor coolant pumps are stopped, the normal residual heat removal system provides the motive force for chemical and volume control system purification loop. Whenever the reactor coolant system is pressurized, the chemical and volume control system can be operated to provide purification. After the normal residual heat removal system is placed in service and the reactor coolant pumps are stopped, further cooling and depressurization of the pressurizer fluids are accomplished by charging through the auxiliary spray connection.

9.3.6.4.3.2.1 Ion Exchange Media Replacement

The initial and subsequent fill of ion exchange media is made through a resin fill nozzle on the top of the ion exchange vessel. When the media is spent and ready to be transferred to the solid radwaste system (WSS), the vessel is isolated from the process flow. The flush water line is opened to the sluice piping and demineralized water is pumped into the vessel through the normal process outlet connection upward through the media retention screen. The media fluidizes in the upward, reverse flow. When the bed has been fluidized, the sluice connection is opened and the bed is sluiced to the spent resin tanks in the solid radwaste system. Demineralized water flow continues until the bed has been removed and the sluice lines are flushed clean of spent resin.

9.3.6.4.3.2.2 Filter Cartridge Replacement

Replacement of spent filter cartridges is performed as described in Subsection 11.4.2.3.2.

9.3.6.4.4 Abnormal Operation

9.3.6.4.4.1 Reactor Coolant System Leak

The chemical and volume control system is capable of making up for a small reactor coolant system leak with either makeup pump at reactor coolant system pressures above the low-pressure setpoint.

9.3.6.4.5 Accident Operation

The chemical and volume control system can provide borated makeup to the reactor coolant system following accidents such as small loss-of-coolant accidents, steam generator tube rupture events, and small steam line breaks. In addition, pressurizer auxiliary spray can reduce reactor coolant system pressure during certain events such as a steam generator tube rupture.

To protect against steam generator overfill, the makeup function is isolated by closing the makeup line containment isolation valves, if a high steam generator level signal is generated. These valves also close and isolate the system on a high pressurizer level signal.

Some of the valves in the chemical and volume control system are required to operate under accident conditions to effect reactor coolant system pressure boundary and containment isolation, as discussed in Subsection 9.3.6.3.7.

9.3.6.4.5.1 Boron Dilution Events

The chemical and volume control system is designed to address a boron dilution accident by closing redundant safety-related valves, tripping the makeup pumps and/or aligning the suction of the makeup pumps to the boric acid tank.

For dilution events occurring at power (assuming the operator takes no action), a reactor trip is initiated on either an overpower trip or an overtemperature ΔT trip. Following a reactor trip signal, the line from the demineralized water system is isolated by closing two safety-related, air-operated valves. The three-way pump suction control valve aligns so the makeup pumps take suction from the boric acid tank. If the event occurs while the makeup pumps are operating, the realignment of these valves causes the makeup pumps, if they continue to operate, to borate the plant.

For dilution events during shutdown, the source range flux doubling signal is used to isolate the makeup line to the reactor coolant system by closing the two safety-related, motor-operated valves, isolate the line from the demineralized water system by closing the two safety-related, air-operated valves, and trip the makeup pumps. For refueling operations, administrative controls are used to prevent boron dilutions by verifying the valves in the line from the demineralized water system are closed and secured. In addition, when the flux doubling signal is blocked during shutdown, the demineralized water system isolation valves are closed to prevent inadvertent boron dilution.

9.3.6.5 Design Evaluation

The chemical and volume control system has redundant, safety-related isolation valves and piping to protect the reactor coolant system pressure boundary, and is designed in accordance with ANSI/ANS-51.1 (Reference 4).

The chemical and volume control system lines that penetrate containment incorporate valve and piping arrangements, meeting the containment isolation criteria described in subsection 6.2.3.

Since the chemical and volume control system supplies unborated water to the reactor coolant system, the potential for inadvertent boron dilution events exists. A safety-related method of stopping an inadvertent boron dilution, which operates as described in Subsection 9.3.6.4.5.1, is incorporated into the chemical and volume control system.

The chemical and volume control system also incorporates a safety-related method of isolating the makeup to the reactor coolant system upon receipt of a high steam generator level signal or a high pressurizer level signal, as described in Subsection 9.3.6.4.5. Other chemical and volume control system components are not safety-related.

Chemical and volume control system components and piping are compatible with the radioactive fluids they contain or functions they perform.

The design of the chemical and volume control system is based on specific General Design Criteria and regulatory guides. The design of the chemical and volume control system is compared to the criteria set forth in Subsection 9.3.4, "Chemical and Volume Control System (PWR) (Including Boron Recovery System)," Revision 2, of the Standard Review Plan. The specific General Design Criteria identified in the Standard Review Plan section are General Design Criteria 1, 2, 3, 4, 14, 29, 30, 31, 32, 33, 53, 54, 56, 60, and 61 as discussed in Section 3.1. Additionally, Subsection 1.9.1 discusses compliance with Regulatory Guides 1.26 and 1.29.

9.3.6.6 Inspection and Testing Requirements

The only required surveillance is for containment and reactor coolant pressure boundary isolation valves and boron dilution mitigation valves. These valves are identified as active and are tested in accordance with the in-service test provisions provided in Table 3.9-16.

Other chemical and volume control system components are monitored for acceptable performance as follows:

- Mixed and cation bed demineralizer -- monitor for bed exhaustion by comparing reactor coolant system samples to samples taken at the outlet of the reactor coolant filter.

- Reactor coolant and makeup filters -- remotely monitor differential pressure with the installed gages and change the filter cartridges, or switch to the backup filter when high differential pressure is detected with the installed pressure gage.

IInspection of the various components is required in accordance with their safety class. The safety classification assignments can be found in Section 3.2.

9.3.6.6.1 Preoperational Inspection and Testing

Preoperational tests are conducted to verify proper operation of the chemical and volume control system. The preoperational tests include valve inspection and testing and flow testing.

9.3.6.6.1.1 Valve Inspection and Testing

The inspection requirements of the chemical and volume control system valves that constitute the reactor coolant pressure boundary are consistent with those identified in Subsection 5.2.4. The inspection requirements of the chemical and volume control system valves that isolate the lines penetrating containment are consistent with those identified in Section 6.6.

9.3.6.6.1.2 Flow Testing

Each chemical and volume control system pump is tested to measure the flow rate from each makeup pump to the reactor coolant system. Testing will be performed with the pump suction aligned to the boric acid storage tank and the discharge aligned to the reactor coolant system. Testing will also be performed with the pump suction aligned to the boric acid storage tank and the discharge aligned to the pressurizer auxiliary spray. Flow will be measured using instrumentation in the pump discharge line. Testing will confirm that each pump provides at least 100 gallons per minute of makeup flow at normal reactor coolant system operating pressure. This is the minimum flow rate necessary to meet the chemical and volume control system functional requirement of providing makeup and pressurizer spray to support the functions described in Subsection 9.3.6.4.4.1. Testing is performed to verify that the maximum makeup flow with both pumps operating is less than 175 gpm, as assumed in the boron dilution analyses presented in Subsection 15.4.6. Testing is performed with both pumps operating and taking suction from the demineralized water system. The chemical and volume control system is aligned to the reactor coolant system at a pressure at or near atmospheric pressure.

9.3.6.6.1.3 Boric Acid Storage Tank Inspection

Inspection of the boric acid storage tank will be performed to verify that the volume in the tank is sufficient to provide 70,000 gallons of borated makeup to the reactor coolant system. This volume of boric acid is required to meet the functional requirement of providing makeup to the reactor coolant system to support the functions described in Subsection 9.3.6.4.4.

9.3.6.7 Instrumentation Requirements

Process control instrumentation is provided to acquire data concerning key parameters about the chemical and volume control system. The location of the instrumentation is shown on the chemical and volume control system piping and instrumentation diagram.

The instrumentation furnishes input signals for monitoring and/or alarming. Indications and/or alarms are provided in the main control room for the following parameters:

- Pressure and differential pressure
- Flow
- Temperature
- Water level

The instrumentation also supplies input signals for control purposes to maintain proper system operation and to prevent equipment damage. Some specific control functions are listed below:

- **Purification isolation** – To preserve the reactor coolant pressure boundary in the event of a break in the chemical and volume control system loop piping. The purification stop valves close automatically on a signal from the protection and safety monitoring system generated by a low-1 pressurizer level signal. This isolation also serves as an equipment protection function to prevent uncovering of the heater elements in the pressurizer. One of these valves also closes on high temperature downstream of the letdown heat exchanger, to protect the resin in the mixed bed and cation demineralizers from being exposed to temperatures that could damage the resins.

- **Containment isolation** – To preserve the containment boundary, containment isolation valves are provided in the letdown line to the liquid radwaste system, the chemical and volume control system makeup line, and the hydrogen addition line. These valves are opened or closed manually from the main control room and the remote shutdown workstation. Interlocks are provided to close these valves automatically upon receipt of a containment isolation signal from the protection and safety monitoring system and require operator action to reopen.

- **Letdown isolation valves** – The letdown isolation valves are used to isolate letdown flow to the liquid radwaste system in addition to the containment isolation function described above. The plant control system provides a signal to automatically open these valves on a high-pressurizer level signal derived from the pressurizer level control system. On a containment isolation signal from the protection and safety monitoring system, a high-high liquid radwaste system degassifier level signal (plant control system), or a low-pressurizer level signal (plant control system), these valves automatically close to provide isolation of the letdown line. The letdown isolation valves also receive a signal from the protection and safety monitoring system to automatically close and isolate letdown during midloop operations based on a low hot leg level. Manual control is provided from the main control room and at the remote shutdown workstation. The letdown flow control valve controls reactor coolant system pressure during startup, as described in Subsection 9.3.6.4.1.

- **Demineralized water system isolation valves** — To prevent inadvertent boron dilution, the demineralized water system isolation valves close on a signal from the protection and safety monitoring system derived from either a reactor trip signal, a source range flux doubling signal, low input voltage (loss of ac power) to the 1E dc and uninterruptible power supply system battery chargers, or a safety injection signal providing a safety-related method of stopping an inadvertent dilution. In addition, when the flux doubling logic is blocked during shutdown, the valves are closed to prevent inadvertent boron dilution. The main control room and remote shutdown workstation provide manual control for these valves.

- **Makeup isolation valves** – To isolate the makeup flow to the reactor coolant system, two valves are provided in the chemical and volume control system makeup line. These valves automatically close on a signal from the protection and safety monitoring system derived from source range flux doubling, high-2 pressurizer level, high steam generator level, or a safeguards signal coincident with high-1 pressurizer level to protect against pressurizer or

steam generator overfill. Manual control for these valves is provided in the main control room and at the remote shutdown workstation. In addition, the valves close on a high-2 containment radiation signal to protect containment integrity.

- **Makeup flow control** – To control makeup flow to the reactor coolant system, a flow controller, which operates in the makeup line, in conjunction with the makeup control system is provided in the chemical and volume control system makeup pump discharge line. This flow controller controls makeup flow by modulating a flow control valve.

- **Makeup pump control** – The makeup pumps can be controlled from the main control room and at the remote shutdown workstation. On a signal from the plant control system generated by a low pressurizer level signal (relative to the programmed level), one of the chemical and volume control system makeup pumps starts automatically to provide makeup. The operating pump automatically stops when the pressurizer level increases to the correct value. During reactor coolant system boron changes (fuel depletion, startups, shutdowns, and refueling), the operator starts one of the makeup pumps after selecting the desired amount of boric acid.

  The makeup pumps can be used to provide reactor coolant system makeup following an accident such as a small loss-of-coolant accident, a steam generator tube rupture, or a small steam line break. Following a safeguards actuation signal, if necessary, the operator remotely opens the makeup line isolation valves. One makeup pump automatically starts to control the pressurizer level between 10 and 20 percent. In addition, a makeup pump may be used to provide pressurizer auxiliary spray in reducing the reactor coolant system pressure for certain accident scenarios.

9.3.7 Combined License Information

Generic Issue 43, and the concerns of Generic Letter 88-14 and NUREG-1275 regarding degradation or malfunction of instrument air supply and safety-related valve failure, are addressed by the training and procedures for operations and maintenance of the instrument air subsystem and air-operated valves.

Plant systems, including the compressed and instrument air system, are maintained in accordance with procedures. Maintenance procedures are discussed in Subsection 13.5.2.2.6. The instrument air supply subsystem components are maintained and tested in accordance with manufacturers' recommendations and procedures. The safety-related air-operated valves are maintained in accordance with manufacturers' recommendations and tested in accordance with plant procedures to allow proper function on loss of air. The instrument air is periodically sampled and tested for compliance with the quality requirements of ANSI/ISA-S7.3-1981.

Operators are provided training on loss of instrument air in accordance with abnormal operating procedures. Plant systems, including the compressed and instrument air system, are operated in accordance with system operating procedures, abnormal operating procedures, and alarm response procedures which are written in accordance with Subsection 13.5.2. The training program for operations and maintenance personnel is discussed in Section 13.2.

9.3.8 References

1. Instrument Society of America Standards, "Quality Standard for Instrument Air," S7.3; 1981.

2. ASME Boiler and Pressure Vessel Code, Section VIII, Division 1, "Pressure Vessels," 1998 Edition, 2000 Addenda.

3. ASME Boiler and Pressure Vessel Code, Section VIII, Division 1, "Pressure Vessels," Subsection A, Part UG-99, Standard Hydrostatic Test, 1998.

4. ANSI/ANS-51.1-1983, "Nuclear Safety Criteria for the Design of Stationary Pressurized Water Reactor Plants."

5. Safety Evaluation by the Office of Nuclear Regulation Related to WCAP-14986, “Westinghouse Owners Group Post Accident Sampling System Requirements,” Westinghouse Owners Group Project No. 694, June 14, 2000.

6. NUREG 0800, Standard Review Plan Section 9.3.2 "Process and Post-Accident Sampling Systems."

Table 9.3.1-1 (Sheet 1 of 2)
Safety-Related Air-Operated Valves

Valve Number	Normal/Failure Position	Function
Compressed and Instrument Air System (CAS)		
CAS-PL-V014	NO/FC	Instrument Air Supply Outside Containment Isolation
Chemical and Volume Control System (CVS)		
CVS-PL-V045	NC/FC	Letdown Containment Isolation IRC
CVS-PL-V047	NC/FC	Letdown Containment Isolation ORC
CVS-PL-V084	NC/FC	Auxiliary Pressurizer Spray Line Isolation
CVS-PL-V092	NO/FC	Hydrogen Addition Containment Isolation
CVS-PL-V136A	NO/FC	Demineralized Water System Isolation
CVS-PL-V136B	NO/FC	Demineralized Water System Isolation
Passive Containment Cooling System (PCS)		
PCS-PL-V001A	NC/FO	Passive Containment Cooling Water Storage Tank Isolation
PCS-PL-V001B	NC/FO	Passive Containment Cooling Water Storage Tank Isolation
Primary Sampling System (PSS)		
PSS-PL-V011	NC/FC	Containment Isolation – Liquid Sample Line
PSS-PL-V023	NO/FC	Containment Isolation – Sample Return Line
PSS-PL-V046	NO/FC	Containment Isolation – Air Sample Line
Passive Core Cooling System (PXS)		
PXS-PL-V014A	NC/FO	Core Makeup Tank A Discharge Isolation
PXS-PL-V014B	NC/FO	Core Makeup Tank B Discharge Isolation
PXS-PL-V015A	NC/FO	Core Makeup Tank A Discharge Isolation
PXS-PL-V015B	NC/FO	Core Makeup Tank B Discharge Isolation
PXS-PL-V042	NO/FC	Nitrogen Supply Containment Isolation ORC
PXS-PL-V108A	NC/FO	Passive Residual Heat Removal Heat Exchanger Control
PXS-PL-V108B	NC/FO	Passive Residual Heat Removal Heat Exchanger Control
PXS-PL-V130A	NO/FC	In-Containment Refueling Water Storage Tank Gutter Isolation
PXS-PL-V130B	NO/FC	In-Containment Refueling Water Storage Tank Gutter Isolation

Table 9.3.1-1 (Sheet 2 of 2)
Safety-Related Air-Operated Valves

Valve Number	Normal/Failure Position	Function
Normal Residual Heat Removal System (RNS)		
RNS-PL-V061	NC/FC	Shutdown Purification Flow Isolation
RNS-PL-V057A	NO/FO	RNS Pump Miniflow Isolation
RNS-PL-V057B	NO/FO	RNS Pump Miniflow Isolation
Steam Generator System (SGS)		
SGS-PL-V036A	NO/FC	Steam Line Condensate Drain Isolation
SGS-PL-V036B	NO/FC	Steam Line Condensate Drain Isolation
SGS-PL-V074A	NO/FC	Steam Generator Blowdown Isolation
SGS-PL-V074B	NO/FC	Steam Generator Blowdown Isolation
SGS-PL-V075A	NO/FC	Steam Generator Series Blowdown Isolation
SGS-PL-V075B	NO/FC	Steam Generator Series Blowdown Isolation
SGS-PL-V086A	NC/FC	Steam Line Condensate Drain Control
SGS-PL-V086B	NC/FC	Steam Line Condensate Drain Control
SGS-PL-V233A	NC/FC	Power Operated Relief Valve
SGS-PL-V233B	NC/FC	Power Operated Relief Valve
SGS-PL-V240A	NO/FC	Main Steam Isolation Valve Bypass Isolation
SGS-PL-V240B	NO/FC	Main Steam Isolation Valve Bypass Isolation
SGS-PL-V250A	NO/FC	Main Feedwater Control
SGS-PL-V250B	NO/FC	Main Feedwater Control
SGS-PL-V255A	NC/FC	Startup Feedwater Control
SGS-PL-V255B	NC/FC	Startup Feedwater Control
Main Control Room Emergency Habitability System (VES)		
VES-PL-V022A	NC/FO	Relief Isolation Valve A
VES-PL-V022B	NC/FO	Relief Isolation Valve B
Containment Air Filtration System (VFS)		
VFS-PL-V003	NC/FC	Containment Purge Inlet Containment Isolation Valve
VFS-PL-V004	NC/FC	Containment Purge Inlet Containment Isolation Valve
VFS-PL-V009	NC/FC	Containment Purge Discharge Containment Isolation Valve
VFS-PL-V010	NC/FC	Containment Purge Discharge Containment Isolation Valve
Liquid Radwaste System (WLS)		
WLS-PL-V055	NC/FC	Sump Discharge Containment Isolation IRC
WLS-PL-V057	NC/FC	Sump Discharge Containment Isolation ORC
WLS-PL-V067	NC/FC	Reactor Coolant Drain Tank Gas Outlet Containment Isolation IRC
WLS-PL-V068	NC/FC	Reactor Coolant Drain Tank Gas Outlet Containment Isolation ORC

Table 9.3.1-2
Nominal Component Design Data - Instrument Air Subsystem

Air Compressors	
Quantity	2
Type	Rotary
Capacity, each (scfm)	800
Design pressure (psig)	150
Air Receivers	
Quantity	2
Capacity, each (ft^3)	Minimum of 672
Design pressure (psig)	150
Prefilters	
Quantity	2
Type	Coalescing
Air Dryers	
Quantity	2
Type	Desiccant/Purge Air Regenerative
Capacity, each (scfm)	800
Operating pressure dew point, maximum (°F)	-28
Afterfilters	
Quantity	2
Type	Particulate

Table 9.3.1-3
Nominal Component Design Data - Service Air Subsystem

Air Compressor	
Quantity	2
Type	Rotary
Capacity, each (scfm)	800
Design pressure (psig)	150
Air Receiver	
Quantity	1
Capacity (ft^3)	Minimum of 672
Design pressure (psig)	150
Prefilters	
Quantity	2
Type	Coalescing
Air Dryer	
Quantity	2
Type	Desiccant/Purge Air Regenerative
Capacity, each (scfm)	800
Design pressure dew point, maximum (°F)	-28
Afterfilters	
Quantity	2
Type	Particulate

Table 9.3.1-4
Nominal Component Design Data - High-pressure Air Subsystem

Air Compressor	
Quantity	1
Type	Reciprocating
Capacity (scfm)	60
Design pressure (psig)	4000
Breathing Air Purifier	
Quantity	1
Type	Molecular Sieve/Activated Carbon
CO to CO_2 conversion	Catalysis
Air supply quality level	E
Air Receiver	
Quantity	1
Capacity, water volume (ft^3)	46
Design pressure (psig)	4000

Table 9.3.3-1
Primary Sampling System Sample Points - Normal Plant Operations (Liquid And Gaseous)

Sample Point Name	Type of Sample(a)
Liquid Sample	
1. RCS Hot Leg (before CVS demineralizer)	Grab
2. Pressurizer Liquid Space	Grab
3. CVS Demineralizer Downstream	Grab
4. PXS Accumulators	Grab
5. PXS Core Makeup Tanks (at top)	Grab
6. PXS Core Makeup Tanks (at bottom)	Grab
7. Containment Sump (pump discharge)	Grab
Gaseous Sample	
8. Containment Air	Grab

Note:

a. This column shows methods to obtain a sample for chemical analysis. It does not specify the frequency of sampling nor does it specify actual location of sample collection. "Grab" means that a grab sample is required for the intended chemical analysis. Depending on the sampling condition, this grab sample can be obtained in the laboratory or in the grab sampling unit.

Table 9.3.3-2 (Sheet 1 of 4)
Local Sample Point Not in the Primary Sampling System
(Normal Plant Operations)

Sample Point Name	Available Number of Points	Type of Sample[a]	Process Measurement
Liquid Sample			
1. CVS boric acid storage tank	1	Grab	pH, chloride, fluoride, boron, silica, suspended solids, radioisotopic liquid, dissolved oxygen
2. CVS boric acid batching tank	1	Grab	Boron, chloride, fluoride
3. Residual heat removal heat exchanger	2	Grab	Radioisotopic liquid, suspended solids, radioisotopic gas, gross specific activity, strontium, iron, tritium, hydrogen, I-131, conductivity, pH, dissolved oxygen, chloride, fluoride, boron, aluminum, silica, lithium radio-isotopic liquid, lithium radioisotopic particulate, magnesium, sulfate, calcium, lithium
4. PXS IRWST	1	Grab	pH, dissolved oxygen, fluoride, boron, conductivity, gross specific activity, sodium, sulfate, silica
5. Main steam line (Outlet SG 1)	1	Continuous	Radiation monitor (See Section 11.5, Table 11.5-1)
6. Main steam line (Outlet SG 2)	1	Continuous	Radiation monitor (See Section 11.5, Table 11.5-1)
7. BDS steam generator blowdown	1	Grab	Tritium, gross radioactivity and identification and concentration of principal radionuclide and alpha emitters
8. SFS purification (Upstream & downstream of SFS ion exchangers) (spent fuel pool treatment)	2	Grab	Conductivity, pH, chloride, silica, corrosion product metals, gross activity, corrosion product activity, fission product activity, I-131, tritium, turbidity, boron, corrosion product metals, organic impurities
9. PCS water storage tank	1	Grab	Hydrogen peroxide
10. Reactor coolant drain tank	1	Grab	Gross radioactivity and identification and concentration of principal radionuclide and alpha emitters. Dissolved gases.

Table 9.3.3-2 (Sheet 2 of 4)
Local Sample Point Not in the Primary Sampling System
(Normal Plant Operations)

Sample Point Name	Available Number of Points	Type of Sample[a]	Process Measurement
11. WLS degasifier (downstream of degasifier discharge pump)	1	Grab	Dissolved gases
12. CCS component cooling surge tank	1	Grab	pH, sodium, chloride, silica, corrosion product metals, corrosion inhibitors
13. CCS loops (downstream of CCS pumps)	2	Grab	pH, sodium, chloride, silica, corrosion product metals, tritium, gross radioactivity and identification and concentration of principal radionuclide and alpha emitters
14. CCS hot leg (upstream of CCS pumps)	1	Continuous	Radiation monitor (See Section 11.5, Table 11.5-1)
15. WLS discharge (liquid radwaste effluent)	2	Continuous	Radiation monitor (See Section 11.5, Table 11.5-1)
16. WLS effluent holdup tanks MT05A, B	2	Grab	Gross radioactivity and identification and concentration of principal radionuclide and alpha emitters
17. WLS waste holdup tanks MT06A, B	2	Grab	Gross radioactivity and identification and concentration of principal radionuclide and alpha emitters
18. WLS monitor tanks MT07A, B, C, D, E, F	6	Grab	Tritium, gross radioactivity and identification and concentration of principal radionuclide and alpha emitters. State and federal environmental discharge requirements such as pH, suspended solids, oil and grease, iron, copper, sodium nitrite
19. WLS ion exchanger pre-filter (downstream)	1	Grab	Suspended solids
20. WLS ion exchanger after-filter (downstream)	1	Grab	Suspended solids

Table 9.3.3-2 (Sheet 3 of 4)
Local Sample Point Not in the Primary Sampling System
(Normal Plant Operations)

Sample Point Name	Available Number of Points	Type of Sample[a]	Process Measurement
21. WLS chemical waste tank	1	Grab	Tritium, gross radioactivity and identification and concentration of principal radionuclide and alpha emitters
22. WSS spent resin tank (liquid)	1	Grab	Tritium, gross radioactivity and identification and concentration of principal radionuclide and alpha emitters
23. SWS blowdown (service water)	1 1	Continuous Grab	Radiation monitor (See Section 11.5, Table 11.5-1) Tritium, gross radioactivity and identification and concentration of principal radionuclide and alpha emitters
24. WWS turbine building sump	2	Grab	Tritium, gross radioactivity and identification and concentration of principal radionuclide and alpha emitters
25. CPS (secondary coolant) spent resin sluice line (liquid)	1	Grab	Tritium, gross radioactivity and identification and concentration of principal radionuclide and alpha emitters
Gaseous Sample			
26. VES MCR emergency air supply headers	2	Grab	Air quality, oxygen, carbon monoxide, carbon dioxide, contaminants
27. WGS effluent discharge to environment	1	Continuous	Radiation monitor (See Section 11.5, Table 11.5-1)
28. WGS inlet	1	Continuous	Oxygen, hydrogen
29. WGS carbon bed vault	1	Continuous	Hydrogen
30. WGS delay bed outlets MV02A, B (waste gas holdup)	2	Grab	Moisture, noble gases, iodine, particulates, tritium
31. Condenser air removal system[b] (including hogging)	1	Grab	Iodine, noble gases, tritium

Table 9.3.3-2 (Sheet 4 of 4)
Local Sample Point Not in the Primary Sampling System
(Normal Plant Operations)

Sample Point Name	Available Number of Points	Type of Sample[a]	Process Measurement
32. Gland seal system[b]	1	Grab	Iodine, noble gases, tritium
33. Plant vent (including containment purge, auxiliary building ventilation, fuel storage and radwaste area ventilation discharge)	1	Continuous & Grab[c]	Iodine, noble gases, particulates

Notes:

a. This column shows methods to obtain a sample for analysis. "Grab" means that a grab sample is required for the intended analysis. Depending on the sampling condition, this grab sample can be obtained in the laboratory or in the grab sampling unit. "Continuous" means that the required analysis is performed via a probe that monitors the sampling steam continuously.

b. Continuous monitoring of discharge for radiation provided in turbine island vent (See Section 11.5, Table 11.5-1).

c. Includes analysis for tritium.

Table 9.3.4-1 (Sheet 1 of 2)
Secondary Sampling System
(Continuous Measurements)

Continuous Sample Points	Process Measurements
Hotwell (Tube Bundle Condenser Shell A)	Specific Conductivity Cation Conductivity Sodium
Hotwell (Tube Bundle Condenser Shell B)	Specific Conductivity Cation Conductivity Sodium
Hotwell (Tube Bundle Condenser Shell C)	Specific Conductivity Cation Conductivity Sodium
Condensate Pump Discharge	Specific Conductivity Cation Conductivity Sodium pH Dissolved Oxygen
Deaerator Inlet (Condensate)	Specific Conductivity Cation Conductivity Sodium pH Oxygen Scavenger Residual Dissolved Oxygen
Feedwater	Specific Conductivity Cation Conductivity Sodium Dissolved Oxygen pH Oxygen Scavenger Residual
Steam Generator Blowdown (SG 1)	Specific Conductivity Cation Conductivity Sodium pH Sulfate Dissolved Oxygen

Table 9.3.4-1 (Sheet 2 of 2)
Secondary Sampling System
(Continuous Measurements)

Steam Generator Blowdown (SG 2)	Specific Conductivity Cation Conductivity Sodium pH Sulfate Dissolved Oxygen
Main Steam System (SG 1)	Specific Conductivity Cation Conductivity Sodium pH Dissolved Oxygen
Main Steam System (SG 2)	Specific Conductivity Cation Conductivity Sodium pH Dissolved Oxygen

Table 9.3.4-2
Secondary Sampling System
(Selective Measurements)

Condenser Tube Bundle B (North Side)
Condenser Tube Bundle B (South Side)
Heater Drain (LP Heater 1A)
Heater Drain (LP Heater 1B)
Heater Drain (MSR-A Tube Drain)
Heater Drain (MSR-A Shell Drain)
Auxiliary Steam
Auxiliary Boiler Feedwater
Auxiliary Boiler Drum
Auxiliary Boiler Condensate
Condensate Polisher Outlet
Heater Drain (Heater 6)
Deaerator Outlet (Feedwater)
Startup Feedwater

Table 9.3.5-1
Component Data - Radioactive Waste Drains System
(Nominal Values)

Drain Sump	
Capacity (gal)	1400
Design pressure	Atmospheric
Design temperature (°F)	150
Material	Stainless steel
Drain Sump Pumps	
Quantity per sump	2
Design flow rate (gpm)	125
Pump type	Pneumatic double diaphragm
Material	Stainless steel

Table 9.3.6-1
Nominal Chemical and Volume Control System Parameters

Purification flow rate (gpm)	100[a]
Normal boration flow rate (gpm)	100
Normal dilution flow rate (gpm)	100
Temperature of reactor coolant entering chemical and volume control system (assumed) (°F)	537
Expected life of demineralizer resin	1 fuel cycle
Normal temperature of effluent to liquid radwaste system (°F)	130
Flow rate to liquid radwaste system (gpm)	100

Note:
a. Volumetric flow rates are based on 130°F and 2300 psia.

Table 9.3.6-2 (Sheet 1 of 3)
Chemical and Volume Control System
Nominal Equipment Design Parameters

Pumps		
Makeup Pumps		
Number	2	
Type	Multistage horizontal centrifugal	
Design pressure (psig)	3,100	
Design flow (gpm)	140	
Material	Stainless Steel (SS)	
Heat Exchangers		
Regenerative Heat Exchanger		
Number	1	
Type	Counterflow	
	Shell Side	**Tube Side**
Design pressure (psig)	3,100	3,100
Design temperature (°F)	600	650
Design flow (lb/hr)	41,580	49,710
Material	SS	SS
Letdown Heat Exchanger		
Number	1	
Type	U-Tube	
	Shell Side	**Tube Side**
Design pressure (psig)	150	3,100
Design temperature (°F)	150	600
Design flow (lb/hr)	224,034	49,710
Material	Carbon Steel	SS

Table 9.3.6-2 (Sheet 2 of 3)
Chemical and Volume Control System
Nominal Equipment Design Parameters

Demineralizers	
Mixed Bed Demineralizer	
Number	2
Design pressure (psig)	3,100
Design temperature (°F)	200
Design flow (gpm)	250
Resin volume (ft^3)	50
Material	SS
Resin type	Mixed Bed Li7OH Form
Cation Bed Demineralizer	
Number	1
Design pressure (psig)	3,100
Design temperature (°F)	200
Design flow (gpm)	250
Resin volume (ft^3)	50
Material	SS
Resin type	Cation H+ Form

Table 9.3.6-2 (Sheet 3 of 3)
Chemical and Volume Control System
Nominal Equipment Design Parameters

Filter	
Reactor Coolant Filter	
Number	2
Type	Disposable Cartridge
Design pressure (psig)	3,100
Design temperature (°F)	200
Design flow (gpm)	250
Dp at design flow (psi)	10
Tank	
Boric Acid Tank	
Number	1
Volume (gal)	73,515
Type	Cylindrical
Design pressure (psig)	Atmospheric
Design temperature (°F)	200
Material	SS

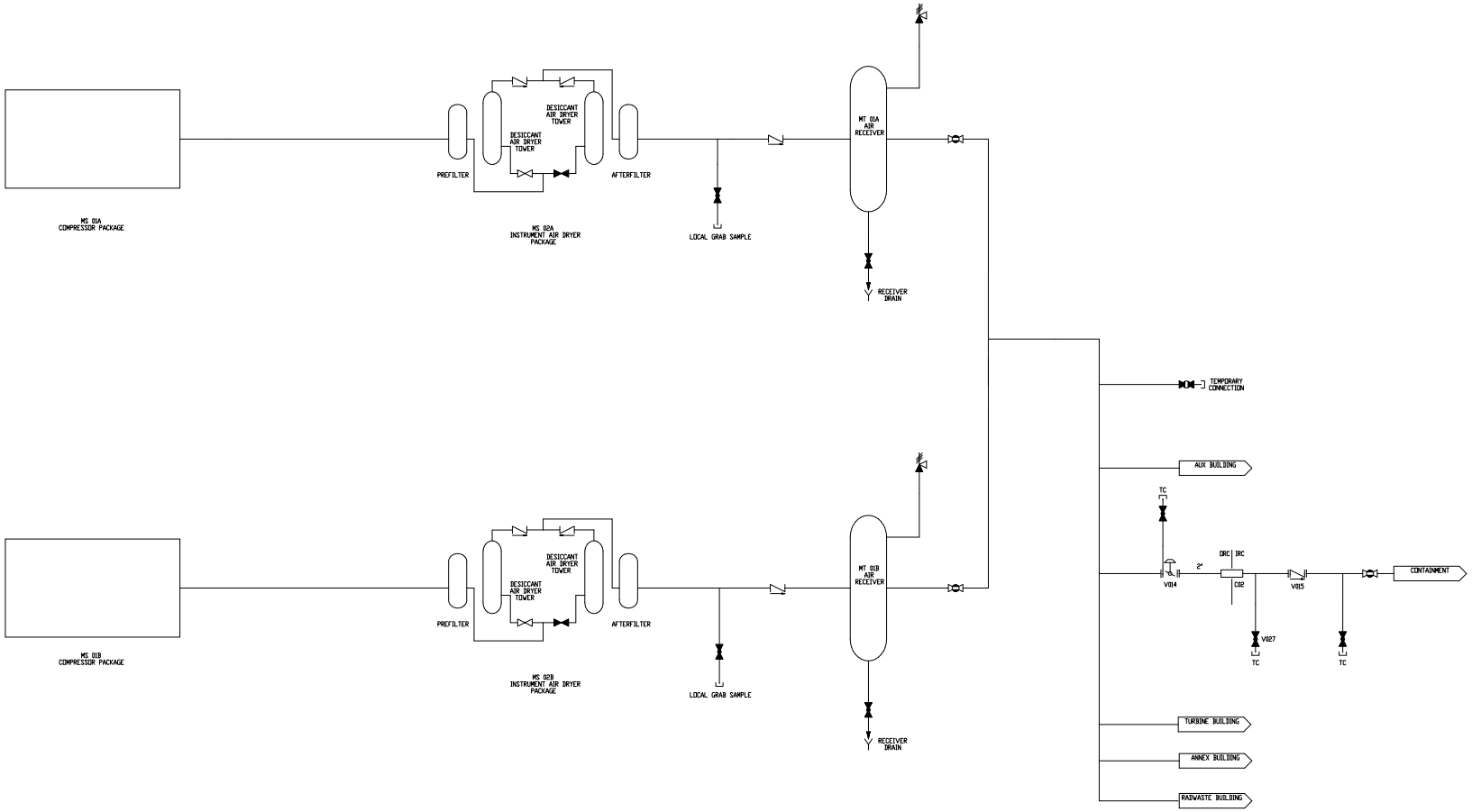

Figure represents system functional arrangement. Details internal to the system may differ as a result of implementation factors such as vendor-specific component requirements.

Figure 9.3.1-1 (Sheet 1 of 3)
Compressed & Instrument Air System
Piping and Instrumentation Diagram
(REF CAS 001 & 005)

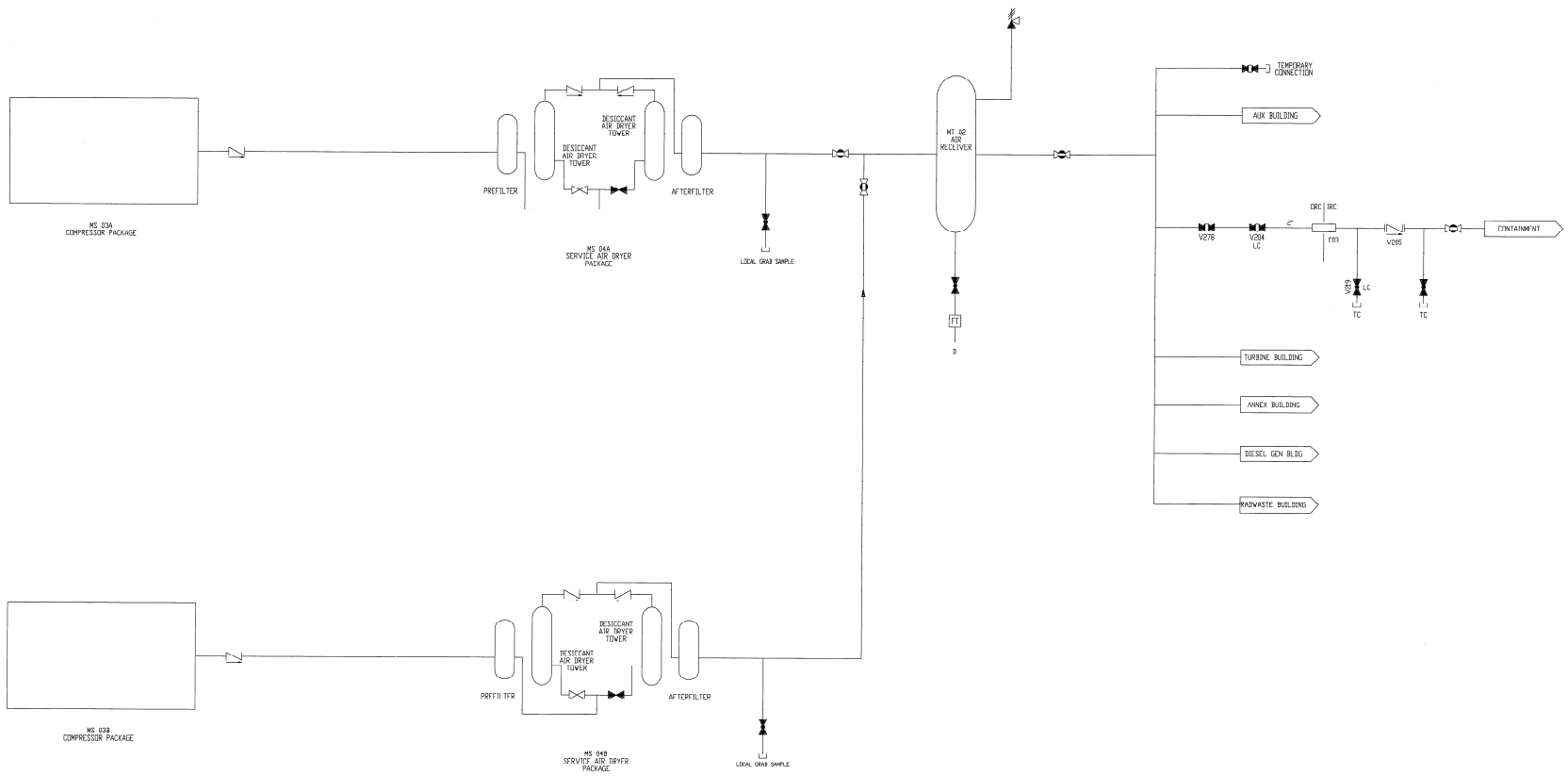

Figure represents system functional arrangement. Details internal to the system may differ as a result of implementation factors such as vendor-specific component requirements.

Figure 9.3.1-1 (Sheet 2 of 3)
Compressed & Instrument Air System
Piping and Instrumentation Diagram
(REF CAS 008 & 012)

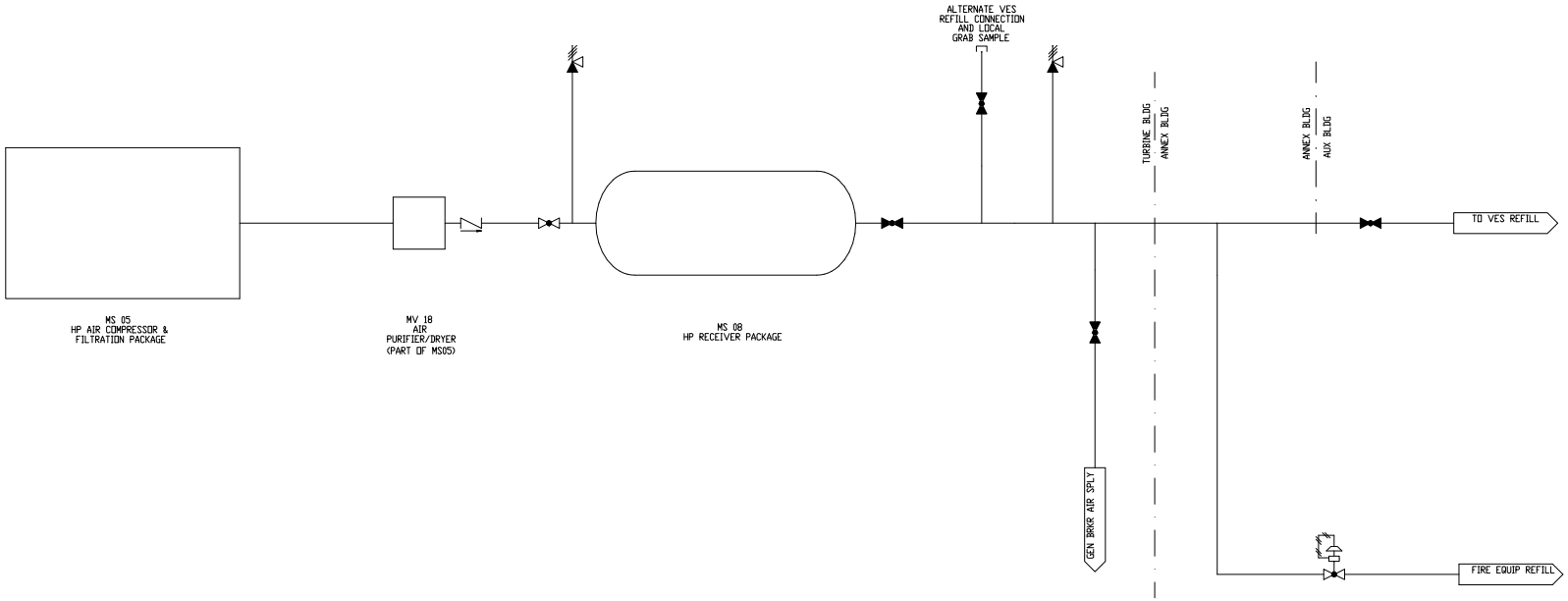

Figure represents system functional arrangement. Details internal to the system may differ as a result of implementation factors such as vendor-specific component requirements.

Figure 9.3.1-1 (Sheet 3 of 3)
Compressed & Instrument Air System
Piping and Instrumentation Diagram
(REF CAS 015)

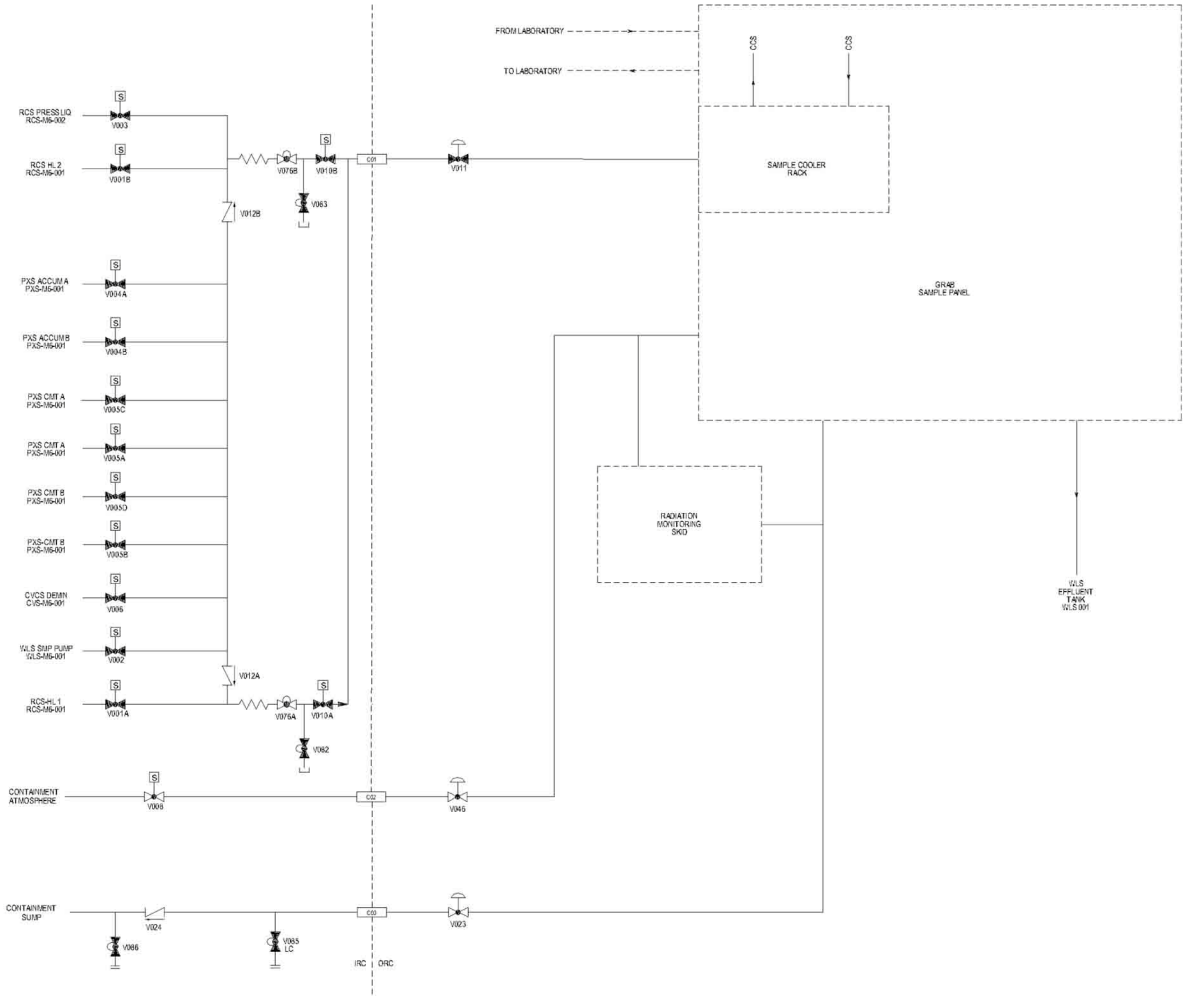

Figure 9.3.3-1
Simplified Sketch of the
Primary Sampling System
(REF PSS 001)

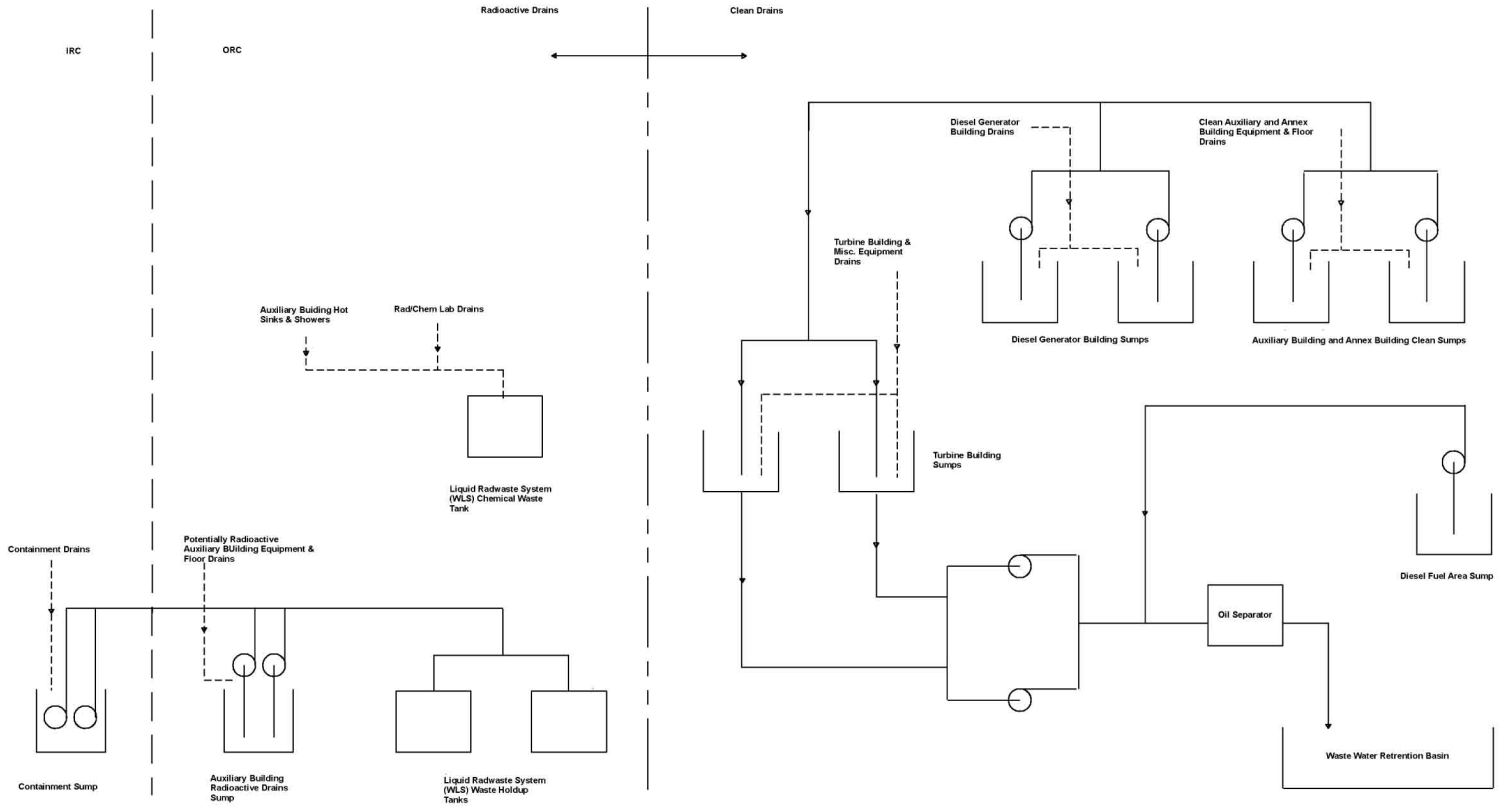

Figure 9.3.5-1
General Arrangement of Drainage Systems

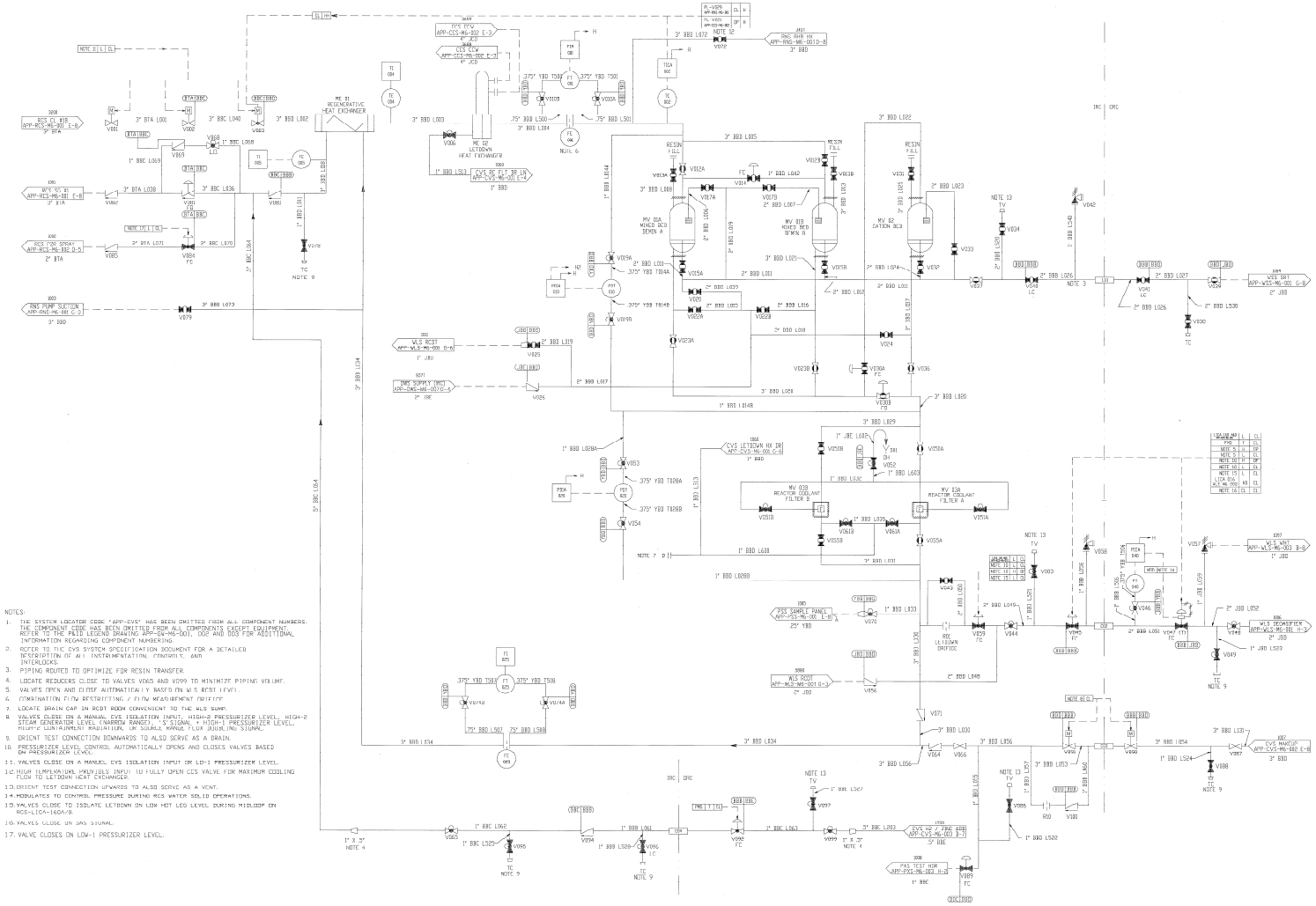

Figure represents system functional arrangement. Details internal to the system may differ as a result of implementation factors such as vendor-specific component requirements.

Figure 9.3.6-1 (Sheet 1 of 2)
Chemical and Volume Control
System Piping and Instrumentation Diagram
(REF) CVS 001

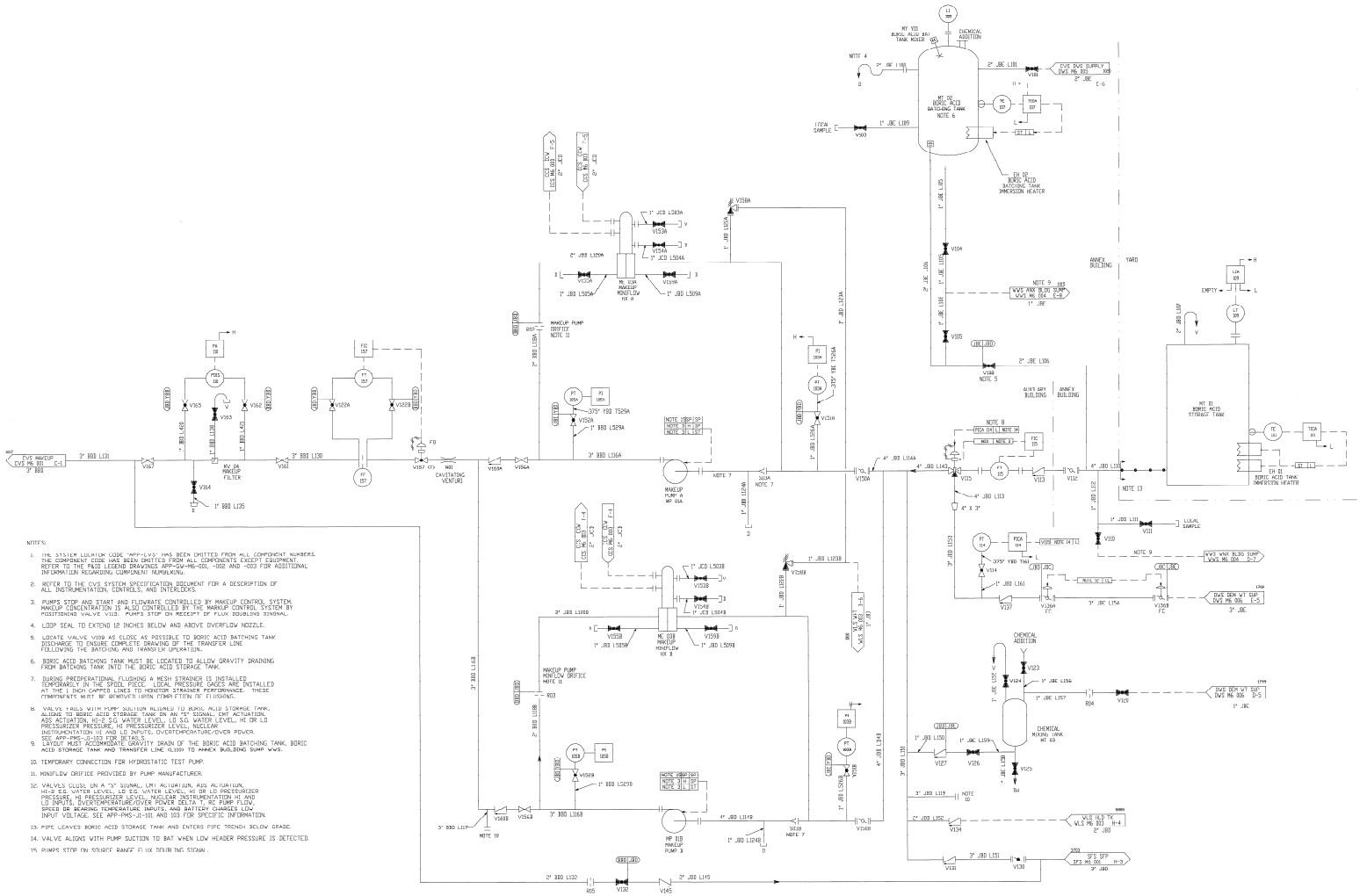
NOTES:
1. THE SYSTEM LOCATOR CODE "APP-CVS" HAS BEEN OMITTED FROM ALL COMPONENT NUMBERS. THE COMPONENT CODE HAS BEEN OMITTED FROM ALL COMPONENTS EXCEPT EQUIPMENT. REFER TO THE P&ID LEGEND DRAWINGS APP-CV-M6-001, -002 AND -003 FOR ADDITIONAL INFORMATION REGARDING COMPONENT NUMBERING.
2. REFER TO THE CVS SYSTEM SPECIFICATION DOCUMENT FOR A DESCRIPTION OF ALL INSTRUMENTATION, CONTROLS, AND INTERLOCKS.
3. PUMPS STOP AND START AND FLOWRATE CONTROLLED BY MAKEUP CONTROL SYSTEM. MAKEUP CONCENTRATION IS ALSO CONTROLLED BY THE MAKUP CONTROL SYSTEM BY POSITIONING VALVE V135. PUMPS STOP ON RECEIPT OF FLOW DOUBLING SIGNAL.
4. LOOP SEAL TO EXTEND 12 INCHES BELOW AND ABOVE OVERFLOW NOZZLE.
5. LOCATE VALVE V109 AS CLOSE AS POSSIBLE TO BORIC ACID BATCHING TANK DISCHARGE TO ENSURE COMPLETE DRAINING OF THE TRANSFER LINE FOLLOWING THE BATCHING AND TRANSFER OPERATION.
6. BORIC ACID BATCHING TANK MUST BE LOCATED TO ALLOW GRAVITY DRAINING FROM BATCHING TANK INTO THE BORIC ACID STORAGE TANK.
7. DURING PREOPERATIONAL FLUSHING A MESH STRAINER IS INSTALLED TEMPORARILY IN THE SPOOL PIECE. LOCAL PRESSURE GAGES ARE INSTALLED AT THE 1 INCH CAPPED LINES TO MONITOR STRAINER PERFORMANCE. THESE TEMPORARY MUST BE REMOVED UPON ITEMS PITTING IN FLUSHING.
8. VALVES FAILS WITH PUMP SUCTION ALIGNED TO BORIC ACID STORAGE TANK. ALIGNS TO BORIC ACID STORAGE TANK ON AN "S" SIGNAL, CMT ACTUATION, ADS ACTUATION, HI-2 S.G. WATER LEVEL, LO S.G. WATER LEVEL, HI OR LO PRESSURIZER PRESSURE, HI PRESSURIZER LEVEL, NUCLEAR INSTRUMENTATION HI AND LO INPUTS, OVERTEMPERATURE/OVER POWER. SEE APP-PMS-J1-103 FOR DETAILS.
9. LAYOUT MUST ACCOMMODATE GRAVITY DRAIN OF THE BORIC ACID BATCHING TANK, BORIC ACID STORAGE TANK AND TRANSFER LINE ALIGN TO ANNEX BUILDING SUMP WWS.
10. TEMPORARY CONNECTION FOR HYDROSTATIC TEST PUMP.
11. MINIFLOW ORIFICE PROVIDED BY PUMP MANUFACTURER.
12. VALVES CLOSE ON A "S" SIGNAL, CMT ACTUATION, ADS ACTUATION, HI-2 S.G. WATER LEVEL, LO S.G. WATER LEVEL, HI OR LO PRESSURIZER PRESSURE, HI PRESSURIZER LEVEL, NUCLEAR INSTRUMENTATION HI AND LO INPUTS, OVERTEMPERATURE/OVER POWER DELTA T, RC PUMP FLOW, SPEED OR BEARING TEMPERATURE INPUTS, AND BATTERY CHARGER LOW INPUT VOLTAGE. SEE APP-PMS-J1-101 AND 103 FOR SPECIFIC INFORMATION.
13. PIPE LEAVES BORIC ACID STORAGE TANK AND ENTERS PIPE TRENCH BELOW GRADE.
14. VALVE ALIGNS WITH PUMP SUCTION TO BAT WHEN LOW HEADER PRESSURE IS DETECTED.
15. PUMPS STOP ON SHORT RANGE FLOW DRAIN INS SIGNAL.
CVS MAKEUP
CVS M6 001 C-1
3" BBD
3" BBD L131
V167
V164
1" BBD L135
MV 04
MAKEUP
FILTER
V162
V163
V161
3" BBD L130
V120A
V122A
V122B
FO
FF
CAVITATING
VENTURI
V169A
V156A
V158A
V158B
V156B
V156C
3" BBD L136A
MAKEUP PUMP
ORIFICE
NOTE 11
MAKEUP PUMP
MINIFLOW ORIFICE
NOTE 11
MAKEUP
PUMP A
MP 01A
NOTE 7
SOLID
NOTE 7
MAKEUP
PUMP B
MP 01B
NOTE 10
V156D
V156E
V156F
V156G
V156H
V156J
V156K
V156L
V156M
V156N
V156P
V156Q
V156R
V156S
V156T
V156U
V156V
V156W
V156X
V156Y
V156Z
V157A
V157B
V157C
V157D
V157E
V157F
V157G
V157H
V157J
V157K
V157L
V157M
V157N
V157P
V157Q
V157R
V157S
V157T
V157U
V157V
V157W
V157X
V157Y
V157Z
V158A
V158B
V158C
V158D
V158E
V158F
V158G
V158H
V158J
V158K
V158L
V158M
V158N
V158P
V158Q
V158R
V158S
V158T
V158U
V158V
V158W
V158X
V158Y
V158Z
V159A
V159B
V159C

9.4 Air-Conditioning, Heating, Cooling, and Ventilation System

The air-conditioning, heating, cooling, and ventilation system is comprised of the following systems that serve the various buildings and structures of the plant:

- Nuclear island nonradioactive ventilation system (Subsection 9.4.1)
- Annex/auxiliary buildings nonradioactive HVAC system (Subsection 9.4.2)
- Radiologically controlled area ventilation system (Subsection 9.4.3)
- Containment recirculation cooling system (Subsection 9.4.6)
- Containment air filtration system (Subsection 9.4.7)
- Radwaste building HVAC system (Subsection 9.4.8)
- Turbine building ventilation system (Subsection 9.4.9)
- Diesel generator building heating and ventilation system (Subsection 9.4.10)
- Health physics and hot machine shop HVAC system (Subsection 9.4.11)

9.4.1 Nuclear Island Nonradioactive Ventilation System

The nuclear island nonradioactive ventilation system (VBS) serves the main control room (MCR), control support area (CSA), Class 1E dc equipment rooms, Class 1E instrumentation and control (I&C) rooms, Class 1E electrical penetration rooms, Class 1E battery rooms, remote shutdown room, reactor coolant pump trip switchgear rooms, adjacent corridors, and the passive containment cooling system (PCS) valve room during normal plant operation.

The main control room emergency habitability system provides main control room habitability in the event of a design basis accident (DBA) and is described in Section 6.4.

9.4.1.1 Design Basis

9.4.1.1.1 Safety Design Basis

The nuclear island nonradioactive ventilation system provides the following nuclear safety-related design basis functions:

- Monitors the main control room supply air for radioactive particulate and iodine concentrations

- Isolates the HVAC penetrations in the main control room boundary on High-2 particulate or iodine concentrations in the main control room supply air or on extended loss of ac power to support operation of the main control room emergency habitability system as described in Section 6.4.

Those portions of the nuclear island nonradioactive ventilation system which penetrate the main control room envelope are safety-related and designed as seismic Category I to provide isolation of the main control room envelope from the surrounding areas and outside environment in the event of a design basis accident. Other functions of the system are nonsafety-related. HVAC equipment and ductwork whose failure could affect the operability of safety-related systems or components are designed to seismic Category II requirements. The remaining portion of the system is nonsafety-related and nonseismic. The equipment is procured to meet the environmental qualifications used in standard building practice.

The nuclear island nonradioactive ventilation system is designed to control the radiological habitability in the main control room within the guidelines presented in Standard Review Plan (SRP) 6.4 and NUREG 0696 (Reference 1), if the system is operable and ac power is available.

Portions of the system that provide the defense-in-depth function of filtration of main control room/ control support area air during conditions of abnormal airborne radioactivity are designed, constructed, and tested to conform with Generic Issue B-36, as described in Section 1.9 and Regulatory Guide 1.140 (Reference 30), as described in Appendix 1A, and the applicable portions of ASME AG-1 (Reference 36), ASME N509 (Reference 2), and ASME N510 (Reference 3).

Power to the ancillary fans to provide post-72-hour ventilation of the control room and I&C rooms is supplied from divisions B and C regulating transformers through two series fuses for isolation. The fuses protect the regulating transformers from failures of the non-1E fan circuits. When normal ventilation is available the ancillary fan circuits are disconnected from the supply with manual normally-open switches.

The nuclear island nonradioactive ventilation system is designed to provide a reliable source of heating, ventilation, and cooling to the areas served when ac power is available. The system equipment and component functional capabilities are to minimize the potential for actuation of the main control room emergency habitability system or the potential reliance on passive equipment cooling. This is achieved through the use of redundant equipment and components that are connected to standby onsite ac power sources.

9.4.1.1.2 Power Generation Design Basis

Main Control Room/Control Support Area (CSA) Areas

The nuclear island nonradioactive ventilation system provides the following specific functions:

- Controls the main control room and control support area relative humidity between 25 to 60 percent
- Maintains the main control room and CSA areas at a slightly positive pressure with respect to the adjacent rooms and outside environment during normal operations to prevent infiltration of unmonitored air into the main control room and CSA areas
- Isolates the main control room and/or CSA area from the normal outdoor air intake and provides filtered outdoor air to pressurize the main control room and CSA areas to a positive pressure of at least 1/8 inch wg when a High-1 radioactivity concentration (gaseous, particulate, or iodine) is detected in the main control room supply air duct.
- Isolates the main control room and/or CSA area from the normal outdoor air intake and provides 100 percent recirculation air to the main control room and CSA areas when a high concentration of smoke is detected in the outside air intake
- Provides smoke removal capability for the main control room and control support area
- Maintains the main control room emergency habitability system passive cooling heat sink below its initial design ambient air temperature limit of 75°F
- Maintains the main control room/control support area carbon dioxide levels below 0.5 percent concentration and the air quality within the guidelines of Table 1 and Appendix C, Table C-1 of Reference 32.

The background noise level in the main control room does not exceed 65 dB(A) when the VBS is operating.

The system maintains the following room temperatures based on the maximum and minimum outside air safety temperature conditions shown in Chapter 2, Table 2.0-201:

Area	Temperature (°F)
Main control room	67 – 75
Control support area	67 – 78

Class 1E Electrical Rooms/Remote Shutdown Room

The nuclear island nonradioactive ventilation system provides the following specific functions:

- Exhausts air from the Class 1E battery rooms to limit the concentration of hydrogen gas to less than 2 percent by volume in accordance with Regulatory Guide 1.128 (Reference 31).
- Maintains the Class 1E electrical room emergency passive cooling heat sink below its initial design ambient air temperature limit of 75°F
- Provides smoke removal capability for the Class 1E electrical equipment rooms and battery rooms

The background noise level in the remote shutdown room does not exceed 65 dB(A) when the VBS is operating.

The system maintains the following room temperatures based on the maximum and minimum outside air safety temperature conditions shown in Chapter 2, Table 2.0-201:

Area	Temperature (°F)
Class 1E battery rooms	67 - 73
Class 1E dc equipment rooms	67 - 73
Class 1E electrical penetration rooms	67 - 73
Class 1E instrumentation and control rooms	67 - 73
Corridors	67 - 73
Remote shutdown room	67 - 73
Reactor coolant pump trip switchgear rooms	67 - 73
HVAC equipment rooms	50 - 85

Passive Containment Cooling System Valve Room

The subsystem maintains the following room temperatures based on the maximum and minimum outside air safety temperature conditions shown in Chapter 2, Table 2.0-201:

Area	Temperature (°F)
Passive containment cooling system valve room	50 - 120

Post-72-Hour Design Basis

Main Control Room

The specific function of the nuclear island nonradioactive ventilation system is to maintain the main control room below a maximum average Wet Bulb Globe Temperature index of 90°F (32.2°C) based on operation at the maximum normal site ambient temperature.

Divisions B and C Instrumentation and Control Rooms Design Basis

The specific function of the nuclear island nonradioactive ventilation system is to maintain the I&C rooms below the qualification temperature of the I&C equipment.

9.4.1.2 System Description

The nuclear island nonradioactive ventilation system is shown in Figure 9.4.1-1. The system consists of the following independent subsystems:

- Main control room/control support area HVAC subsystem
- Class 1E electrical room HVAC subsystem
- Passive containment cooling system valve room heating and ventilation subsystem

9.4.1.2.1 General Description

9.4.1.2.1.1 Main Control Room/Control Support Area HVAC Subsystem

The main control room/control support area HVAC subsystem serves the main control room and control support area with two 100 percent capacity supply air handling units, return/exhaust air fans, supplemental air filtration units, associated dampers, instrumentation and controls, and common ductwork. The supply air handling units and return/exhaust air fans are connected to common ductwork which distributes air to the main control room and CSA areas. The main control room envelope consists of the main control room, shift manager's office, operation work area, toilet, and operations break room area. The CSA area consists of the main control support area operations area, conference rooms, NRC room, computer rooms, shift turnover room, kitchen/rest area, and restrooms. The main control room and control support area toilets have separate exhaust fans.

Outside supply air is provided to the plant areas served by the main control room/control support area HVAC subsystem through an outside air intake duct that is protected by an intake enclosure located on the roof of the auxiliary building at elevation 153′-0″. The outside air intake duct is located more than 50 feet below and more than 100 feet laterally away from the plant vent discharge. The supply, return, and toilet exhaust are the only HVAC penetrations in the main control room envelope and include redundant safety-related seismic Category I isolation valves that are physically located within the main control room envelope. Redundant safety-related radiation monitor sample line connections are located upstream of the VBS supply air isolation valves. These monitors initiate operation of the nonsafety-related supplemental air filtration units on High-1 radioactivity concentrations (gaseous, particulate, or iodine) and isolate the main control room from the nuclear island nonradioactive ventilation system on High-2 particulate or iodine radioactivity concentrations. See Section 11.5 for a description of the main control room supply air radiation monitors.

Both redundant trains of supplemental air filtration units and one train of the supply air handling unit are located in the main control room mechanical equipment room at elevation 135′-3″ in the auxiliary building. The other supply air handling unit subsystem is located in the main control room mechanical equipment room at elevation 135′-3″ in the annex building. The main control room toilet exhaust fan is located at elevation 135′-3″ in the auxiliary building. A humidifier is provided for each supply air handling unit. The supply air handling unit cooling coils are provided with chilled water from air-

cooled chillers in the central chilled water system. See Subsection 9.2.7 for the chilled water system description.

The main control room/control support area HVAC subsystem is designed so that smoke, hot gases, and fire suppressant will not migrate from one fire area to another to the extent that they could adversely affect safe shutdown capabilities, including operator actions. Fire or combination fire and smoke dampers are provided to isolate each fire area from adjacent fire areas during and following a fire in accordance with NFPA 90A (Reference 27) requirements. These combination smoke/fire dampers close in response to smoke detector signals or in response to the heat from a fire. See Appendix 9A for identification of fire areas.

9.4.1.2.1.2 Class 1E Electrical Room HVAC Subsystem

The Class 1E electrical room HVAC subsystem serves the Class 1E electrical rooms, Class 1E instrumentation and control (I&C) rooms, Class 1E electrical penetration rooms, Class 1E battery rooms, spare Class 1E battery room, remote shutdown room, and reactor coolant pump trip switchgear rooms. The A and C electrical divisions, spare battery room, and reactor coolant pump trip switchgear rooms are served by one ventilation subsystem; the B and D electrical divisions and remote shutdown room are served by a second ventilation subsystem.

Each subsystem consists of two 100 percent capacity supply air handling units, return/exhaust air fans, associated dampers, controls and instrumentation, and common ductwork. The supply air handling units and return/exhaust air fans are connected to a common ductwork which distributes air to the Class 1E electrical rooms. The outside supply air intake enclosure for the A and C subsystem is common to the main control room/control support area intake located on the roof of the auxiliary building at elevation 153′-0″. The outside supply air intake for the B and D subsystem is located separate from the main control room/control support area air intake enclosure on the auxiliary building roof at elevation 153′-0″. The exhaust ducts from the battery rooms are connected to the turbine building vent to remove hydrogen gas generated by the batteries.

The HVAC equipment which serves the A and C electrical divisions is located in the nuclear island nonradioactive ventilation system main control room/A and C equipment room at elevation 135′-3″ in the auxiliary building. The HVAC equipment which serves the B and D division of Class 1E electrical equipment is located in the upper and lower nuclear island nonradioactive ventilation system B and D equipment rooms at elevation 117′-0″ and at elevation 135′-3″.

The supply air handling unit cooling coils are provided with chilled water from the air-cooled chillers in the central chilled water system. The two air handling units for each set of electrical divisions are provided with chilled water from redundant air-cooled chillers. Refer to Subsection 9.2.7 for the chilled water system description.

Each subsystem for the Class 1E battery rooms is provided with two 100 percent capacity exhaust fans.

The Class 1E electrical room HVAC subsystem is designed so that smoke, hot gases, and fire suppressant does not migrate from one fire area to another to the extent that they could adversely affect safe shutdown capabilities, including operator actions. Separate ventilation subsystems are provided to serve the electrical division A and C equipment rooms and the electrical division B and D equipment rooms. The use of separate HVAC distribution subsystems for the redundant trains of electrical equipment prevents smoke and hot gases from migrating from one distribution division to the other through the ventilation system ducts. In addition, combination fire-smoke dampers are provided for Class 1E equipment rooms, including the remote shutdown room, to isolate each fire area and block the migration of smoke and hot gases to or from adjacent fire areas in accordance with NFPA 90A requirements. These combination fire/smoke dampers close in response to smoke

detector signals or in response to the heat from a fire. During a fire, the pressure difference across the doors in the stairwells S01 and S02 is maintained in accordance with the guidance of NFPA 92A (Reference 33) by dedicated stairwell pressurization fans. See Appendix 9A for identification of fire areas.

9.4.1.2.1.3 Passive Containment Cooling System Valve Room Heating and Ventilation Subsystem

The passive containment cooling system valve room heating and ventilation subsystem serves the passive containment cooling system valve room.

The subsystem consists of one 100 percent ventilating fan, two 100 percent capacity electric unit heaters, associated dampers, controls and instrumentation. The passive containment cooling system valve room heating and ventilation subsystem equipment is located in the passive containment cooling system valve room in the containment dome area at elevation 286′-6″.

The exhaust fan draws outside air through an intake louver damper and directly exhausts to the environment.

9.4.1.2.2 Component Description

The nuclear island nonradioactive ventilation system is comprised of the following major components. These components are located in buildings on the Seismic Category I Nuclear Island and the Seismic Category II portion of the annex building. The seismic design classification, safety classification and principal construction code for Class A, B, C, or D components are listed in Section 3.2. Tables 9.4.1-1, 9.4.1-2 and 9.4.1-3 provide design parameters for major components in each subsystem.

Supply Air Handling Units

Each air handling unit consists of a mixing box section, a low efficiency filter bank, high efficiency filter bank, an electric heating coil, a chilled water cooling coil bank, and supply and return/exhaust air fans.

Supply and Return/Exhaust Air Fans

The supply and return/exhaust air fans are centrifugal type, single width single inlet (SWSI) or double width double inlet (DWDI), with high efficiency wheels and backward inclined blades to produce non-overloading horsepower characteristics. The fans are designed and rated in accordance with ANSI/AMCA 210 (Reference 4), ANSI/AMCA 211 (Reference 5) and ANSI/AMCA 300 (Reference 6).

Ancillary Fans

The ancillary fans are centrifugal type with non-overloading horsepower characteristics. Each can provide a minimum of 1,530 cfm. The fans are designed and rated in accordance with ANSI/AMCA 210 (Reference 4), ANSI/AMCA 211 (Reference 5), and ANSI/AMCA 300 (Reference 6).

Supplemental Air Filtration Units

Each supplemental air filtration unit includes a high efficiency filter bank, an electric heating coil, a charcoal adsorber with upstream HEPA filter bank, a downstream postfilter bank and a fan. The filtration unit configurations, including housing, internal components, ductwork, dampers, fans and controls, and the location of the fans on the unfiltered side of units are designed, constructed, and tested to meet the applicable performance requirements of ASME AG-1, ASME N509, and ASME N510 (References 36, 2, and 3) to satisfy the guidelines of Regulatory Guide 1.140 (Reference 30).

Low Efficiency Filters, High Efficiency Filters, and Postfilters

The low efficiency filters and high efficiency filters have a rated dust spot efficiency based on ASHRAE 52 and 126 (References 7 and 35). Filter minimum average dust spot efficiency is shown in Tables 9.4.1-1 and 9.4.1-2. High efficiency filter performance upstream of HEPA filter banks meet the design requirements of ASME AG-1 (Reference 36), Section FB. Postfilters downstream of the charcoal filters have a minimum DOP efficiency of 95 percent. The filters meet UL 900 (Reference 8) Class I construction criteria.

HEPA Filters

HEPA filters are constructed, qualified, and tested in accordance with UL-586 (Reference 9) and ASME AG-1 (Reference 36), Section FC. Each HEPA filter cell is individually shop tested to verify an efficiency of at least 99.97 percent using a monodisperse 0.3-µm aerosol in accordance with ASME AG-1 (Reference 36), Section TA.

Charcoal Adsorbers

Each charcoal adsorber is designed, constructed, qualified, and tested in accordance with ASME AG-1 (Reference 36), Section FE; and Regulatory Guide 1.40. Each charcoal adsorber is a single assembly with welded construction and 4-inch deep Type III rechargeable adsorber cell, conforming with IE Bulletin 80-03 (Reference 29).

Electric Heating Coils

The electric heating coils are multi-stage fin tubular type. The electric heating coils meet the requirements of UL-1995 (Reference 10). Electric heating coils used in battery rooms meet the requirements of UL 823 (Reference 39) for Class 1 Division I, Group B hazardous locations. The coils for the supplemental air filtration subsystem are constructed, qualified, and tested in accordance with ASME AG-1 (Reference 36), Section CA.

Electric Convection Heaters

The electric convection heaters are of the single-stage or two-stage fin tubular type. The electric unit heaters are UL-listed and meet the requirements of UL-1996 (Reference 26) and the National Electric Code NFPA 70 (Reference 28). Convection heaters meet the requirements of UL 1278 (Reference 40) or UL 1042 (Reference 41). Convection heaters are controlled by an integral temperature sensor or by a temperature sensor located in the space served by the heater.

Electric Unit Heaters

The electric unit heaters are single-stage or two-stage fin tubular type. The electric unit heaters are UL-listed and meet the requirements of UL-1996 (Reference 26) and the National Electrical Code NFPA 70 (Reference 28).

Cooling Coils

The chilled water cooling coils are counterflow, finned tubular type. The cooling coils are designed and rated in accordance with ASHRAE 33 (Reference 11) and ANSI/ARI 410 (Reference 12).

Humidifiers

The humidifiers are packaged electric steam generator type which converts water to steam and distributes it through the air handling system. The humidifiers are designed and rated in accordance with ARI 640 (Reference 13).

Isolation Dampers and Valves

Nonsafety-related isolation dampers are bubble tight, single- or parallel-blade type. The isolation dampers have spring return actuators which fail closed on loss of electrical power. The isolation dampers are constructed, qualified, and tested in accordance with ANSI/AMCA 500 (Reference 14) or ASME AG-1 (Reference 36), Section DA.

The main control room pressure boundary penetrations include isolation valves, interconnecting piping, and vent and test connection with manual test valves. The isolation valves are classified as Safety Class C (see Subsection 3.2.2.5 and Table 3.2-3) and seismic Category I. Their boundary isolation function will be tested in accordance with ASME N510 (Reference 3).

The main control room pressure boundary isolation valves have motor operators. The valves are designed to fail as is in the event of loss of electrical power. The valves are qualified to shut tight against control room pressure.

Tornado Protection Dampers

The tornado protection dampers are split-wing type and designed to close automatically. The tornado protection dampers are designed against the effect of 300 mph wind.

Shutoff, Balancing and Backdraft Dampers

Multiblade, two-position remotely operated shutoff dampers are parallel-blade type. Multiblade, balancing dampers are opposed-blade type. Backdraft dampers are of the counterbalanced type and are provided to delay smoke migration through ductwork in case of fire. The backdraft dampers meet the Leakage Class II requirements of ASME N509 (Reference 2). Air handling unit and fan shutoff dampers are designed for maximum fan static pressure at shutoff flow and meet the performance requirements in accordance with ANSI/AMCA 500 (Reference 14). The supplemental air filtration subsystem dampers are constructed, qualified, and tested in accordance with ANSI/AMCA 500 or ASME AG-1 (Reference 36), Section DA.

Combination Fire/Smoke Dampers

Combination fire/smoke dampers are provided at duct penetrations through fire barriers to maintain the fire resistance ratings of the barriers. The combination fire/smoke dampers meet the design, leakage testing, and installation requirements of UL-555S (Reference 25).

Ductwork and Accessories

Ductwork, duct supports, and accessories are constructed of galvanized steel. Ductwork subject to fan shutoff pressures is structurally designed to accommodate fan shutoff pressures. Ductwork, supports, and accessories meet the design and construction requirements of SMACNA Industrial Rectangular and Round Duct Construction Standards (References 16 and 34) and SMACNA HVAC Duct Construction Standards – Metal and Flexible (Reference 17). The supplemental air filtration and main control room/control support area HVAC subsystem's ductwork, including the air filtration units and the portion of the ductwork located outside of the main control room envelope, that maintains integrity of the main control room/control support area pressure boundary during conditions of abnormal airborne radioactivity are designed in accordance with ASME AG-1 (Reference 36), Article SA-4500, to provide low leakage components necessary to maintain main control room/control support area habitability.

9.4.1.2.3 System Operation

9.4.1.2.3.1 Main Control Room/Control Support Area HVAC Subsystem

Normal Plant Operation

During normal plant operation, one of the two 100 percent capacity supply air handling units and return/exhaust air fans operates continuously. Outside makeup air supply to the supply air handling units is provided through an outside air intake duct. The outside airflow rate is automatically controlled to maintain the main control room and CSA areas at a slightly positive pressure with respect to the surrounding areas and the outside environment.

The main control room/control support area supply air handling units are sized to provide cooling air for personnel comfort, equipment cooling, and to maintain the main control room emergency habitability passive heat sink below its initial ambient air design temperature. The temperature of the air supplied by each air handling unit is controlled by temperature sensors located in the main control room return air duct and in the computer room B return air duct to maintain the ambient air design temperature within its normal design temperature range by modulating the electric heat or chilled water cooling. Some spaces have convection heaters for temperature control.

The outside air is continuously monitored by smoke monitors located at the outside air intake plenum and the return air is monitored for smoke upstream of the supply air handling units. The supply air to the main control room is continuously monitored for airborne radioactivity while the supplemental air filtration units remain in a standby operating mode.

The standby supply air handling unit and corresponding return/exhaust fans are started automatically if one of the following conditions shuts down the operating unit:

- Airflow rate of the operating fan is above or below predetermined setpoints.
- Return air temperature is above or below predetermined setpoints.
- Differential pressure between the main control room and the surrounding areas and outside environment is above or below predetermined setpoints.
- Loss of electrical and/or control power to the operating unit.

Abnormal Plant Operation

Control actions are taken at two levels of radioactivity as detected in the main control room supply air duct. The first is “High-1” radioactivity based upon radioactivity instrumentation (gaseous, particulate, or iodine). The second is “High-2” radioactivity based upon either particulate or iodine radioactivity instruments.

If “High-1” radioactivity is detected in the main control room supply air duct and the main control room/control support area HVAC subsystem is operable, both supplemental air filtration units automatically start to pressurize the main control room and CSA areas to at least 1/8 inch wg with respect to the surrounding areas and the outside environment using filtered makeup air. The normal outside air makeup duct and the main control room and control support area toilet exhaust duct isolation dampers close. The smoke/purge exhaust isolation dampers close, if open. The main control room/control support area supply air handling unit continues to provide cooling with recirculation air to maintain the main control room passive heat sink below its initial ambient air design temperature and maintains the main control room and CSA areas within their design temperatures. The supplemental air filtration subsystem pressurizes the combined volume of the main control room and control support area concurrently with filtered outside air. A portion of the

recirculation air from the main control room and control support area is also filtered for cleanup of airborne radioactivity. The main control room/control support area HVAC equipment and ductwork that form an extension of the main control room/control support area pressure boundary limit the overall infiltration (negative operating pressure) and exfiltration (positive operating pressure) rates to those values shown in Table 9.4.1-1. Based on these values, the system is designed to maintain personnel doses within allowable General Design Criteria (GDC) 19 limits during design basis accidents in both the main control room and the control support area.

If ac power is unavailable for more than 10 minutes or if “High-2” particulate or iodine radioactivity is detected in the main control room supply air duct, which would lead to exceeding GDC-19 operator dose limits, the protection and safety monitoring system automatically isolates the main control room from the normal main control room/control support area HVAC subsystem by closing the supply, return, and toilet exhaust isolation valves. Main control room habitability is maintained by the main control room emergency habitability system, which is discussed in Section 6.4.

The main control room and CSA areas ventilation supply and return/exhaust ducts can be remotely or manually isolated from the main control room.

If a high concentration of smoke is detected in the outside air intake, an alarm is initiated in the main control room and the main control room/control support area HVAC subsystem is manually realigned to the recirculation mode by closing the outside air and toilet exhaust duct isolation valves. The main control room and control support area toilet exhaust fans are tripped upon closure of the isolation valves. The main control room/CSA areas are not pressurized when operating in the recirculation mode. The main control room/control support area HVAC supply air subsystem continues to provide cooling, ventilation, and temperature control to maintain the emergency habitability passive heat sink below its initial ambient air design temperature and maintains the main control room and CSA areas within their design temperatures.

In the event of a fire in the main control room or control support area, in response to heat from the fire or upon receipt of a smoke signal from an area smoke detector, the combination fire/smoke dampers close automatically to isolate the fire area. The subsystem continues to provide ventilation/cooling to the unaffected area and maintains the unaffected areas at a slightly positive pressure. The main control room/control support area HVAC subsystem can be manually realigned to the once-through ventilation mode to supply 100 percent outside air to the unaffected area. Realignment to the once-through ventilation mode minimizes the potential for migration of smoke or hot gas from the fire area to the unaffected area. Smoke and hot gases can be removed from the affected area by reopening the closed combination fire/smoke damper(s) from outside of the affected fire area during the once-through ventilation mode. In the once-through ventilation mode, the outside air intake damper to the air handling unit mixing plenum opens and the return air damper to the air handling unit closes to provide 100 percent outside air to the supply air handling unit. In this mode, the subsystem exhaust air isolation damper opens to exhaust the return air directly to the turbine building vent.

Power is supplied to the main control room/control support area HVAC subsystem by the plant ac electrical system. In the event of a loss of the plant ac electrical system, the main control room/control support area ventilation subsystem can be transferred to the onsite standby diesel generators. The convection heaters and duct heaters are not transferred to the onsite standby diesel generator.

When complete ac power is lost and the outside air is acceptable radiologically and chemically, MCR habitability is maintained by operating one of the two MCR ancillary fans to supply outside air to the MCR. It is expected that outside air will be acceptable within 72 hours following a radiological release. See Subsection 6.4.2.2 for details. The outside air pathway to the ancillary fans is provided through the nonradioactive ventilation system air intake opening located on the roof, the mechanical room at floor elevation 135'-3", and nonradioactive ventilation system supply duct. Warm air from the

MCR is vented to the annex building through stairway S05, into the remote shutdown room and the clean access corridor at elevation 100'-0". The ancillary fan capacity and air flow rate maintain the MCR environment below a maximum average Wet Bulb Globe Temperature index of 90°F (32.2°C). The ancillary fans and flow path are located within the auxiliary building which is a Seismic Category I structure.

Power supply to the ancillary fans is from the respective division B or C regulating transformers which receive power from the ancillary diesel generators. For post-72-hour power supply discussion see Subsection 8.3.1.1.1.

9.4.1.2.3.2 Class 1E Electrical Room HVAC Subsystem

The Class 1E electrical room HVAC equipment that serves electrical division A and C equipment is described in this section. The operation of the Class 1E electrical room HVAC equipment that serves electrical division B and D is similar.

Normal Plant Operation

During normal plant operation, one of the redundant supply air handling units, return fans, and battery room exhaust fans operate continuously to provide room temperature control, to maintain the Class 1E electrical room emergency passive heat sink below its initial ambient air temperature, and to purge and prevent build-up of hydrogen gas concentration in the Class 1E Battery Rooms. The temperature of the air supplied by each air handling unit is controlled by temperature sensors located in the return air duct to maintain the room air temperature within the normal design range by modulating electric heating or chilled water cooling. Duct heaters are controlled by temperature sensors located in the space served by the heater.

During normal plant operation, the exhaust airflow from the Class 1E battery rooms is vented directly to the turbine building vent to limit the concentration of hydrogen gas in the rooms to less than 2 percent by volume in accordance with the guidelines of Regulatory Guide 1.128.

The outside makeup air to the supply air handling units is provided through an outside air intake duct. The outside airflow rate is manually balanced during system startup to provide adequate makeup air for the battery room exhaust fans.

The standby supply air handling unit and the corresponding return/exhaust fans are started automatically if one of the following conditions occurs:

- Airflow rate of the operating fan is above or below predetermined set points
- Return air temperature is above or below predetermined setpoints.
- Loss of electrical and/or control power to the operating unit.

Abnormal Plant Operation

The operation of the Class 1E electrical room HVAC subsystem is not affected by the detection of airborne radioactivity in the main control room supply air duct of the main control room/control support area HVAC subsystem. During a design basis accident (DBA), if the plant ac electrical system is unavailable, the Class 1E electrical room passive heat sink provides area temperature control. Refer to Section 6.4 for further details.

If a high concentration of smoke is detected in the outside air intake and an alarm is initiated in the main control room, the Class 1E electrical HVAC subsystem(s) can be manually aligned to the recirculation mode by closing the outside air intake damper to the air handling unit mixing plenum. This allows 100 percent room air to return to the supply air subsystem air handling unit. The

subsystem continues to provide cooling, ventilation, and temperature control to maintain the areas served by the subsystem(s) within their design temperatures and pressures.

In the event of a fire in a Class 1E electrical room, in response to heat from the fire or upon receipt of a smoke signal from an area smoke detector, the combination fire/smoke dampers close automatically to isolate the fire area. The affected subsystem continues to provide ventilation/cooling to the remaining areas and maintains the remaining areas at a slightly positive pressure. Either or both subsystems can be manually realigned to the once-through ventilation mode to supply 100 percent outside air to the unaffected areas. Realignment to the once-through ventilation mode minimizes the potential for migration of smoke and hot gases from a non-Class 1E electrical room or a Class 1E electrical room of one division into the Class 1E electrical room of another division. Smoke and hot gases can be removed from the affected areas by reopening the closed combination fire/smoke dampers from outside of the affected fire area during the once-through ventilation mode. In the once-through ventilation mode, the outside air intake damper to the air handling unit mixing plenum opens and the return air damper to the air handling unit closes to allow 100 percent outside air to the supply air handling unit. The subsystem exhaust air isolation damper also opens to exhaust room air directly to the turbine building vent. During a fire, the pressure difference across the doors in stairwells S01 and S02 is maintained in accordance with the guidance of NFPA 92A (Reference 33) by dedicated stairwell pressurization fans.

The power supplies to the Class 1E electrical room HVAC subsystem are provided by the plant ac electrical system and the onsite standby diesel generators. In the event of a loss of the plant ac electrical system, the Class 1E electrical room HVAC subsystem is automatically transferred to the onsite standby diesel generators. The convection heaters and duct heaters are not transferred to the onsite standby diesel generator.

When complete ac power is lost, division B and C instrumentation and control room temperature is maintained by operating their respective ancillary fans (VBS-MA-11 and VBS-MA-12) to supply outside air to the I&C rooms. It is expected that outside air will be supplied within 72 hours following a radiological release. The outside air pathway to the ancillary fans is through the nonradioactive ventilation system outside air intake opening located on the roof, the mechanical room at floor elevation 135′-3″, stairway No. 1 doors at elevation 135′-3″ and 82′-6″, the access corridor at floor elevation 82′-6″, and the divisional battery rooms. The warm air is vented to the annex building through the clean access corridor at elevation 100′-0″. The outside air supply provides cooling and maintains room temperature below the qualification temperature of the I&C equipment. The ancillary fans and flow path are located within the auxiliary building which is a Seismic Category I structure.

Power supply to the ancillary fans is from the respective division B or C regulating transformers which receive power from the ancillary diesel generators. For post-72-hours power supply discussion see Subsection 8.3.1.1.1.

9.4.1.2.3.3 Passive Containment Cooling System Valve Room Heating and Ventilation Subsystem

Normal Plant Operation

The passive containment cooling system valve room ventilation fan exhausts room air to the outside environment to maintain room temperature within its normal design temperature range.

When heating is required, one of the two redundant electric unit heaters provides heating to maintain the passive containment cooling system valve room temperature above its minimum design temperature. The lead electric unit heater starts or stops when the room air temperature is above or below predetermined setpoints. The standby electric unit heater starts automatically if the room air temperature drops below a predetermined setpoint.

Abnormal Plant Operation

The power supplies to the passive containment cooling system valve room unit heaters are provided by the plant ac electrical system and the onsite standby diesel generators. In the event of a loss of the plant ac electrical system, the passive containment cooling system valve room unit heaters can be transferred to the onsite standby diesel generators by the operator.

The power supply to the passive containment cooling system valve room ventilation fan is provided by the plant ac electrical system. The room temperature is not expected to exceed 120°F, based on maximum ambient conditions and internal heat sources.

Following a fire in the passive containment cooling system valve room, smoke and hot gases can be removed from the area using portable exhaust fans and flexible ductwork.

9.4.1.3 Safety Evaluation

The nuclear island nonradioactive ventilation system has no safety-related function other than main control room envelope isolation and main control room supply air radioactivity monitoring, and therefore requires no nuclear safety evaluation. Redundant safety-related isolation valves are provided in the supply, return, and exhaust ducts penetrating the main control room. Therefore, there are no single active failures which would prevent isolation of the main control room envelope. The safety-related redundant main control room supply air radiation monitors are provided. The nuclear island nonradioactive ventilation system is designed so that safety-related systems, structures, or components are not damaged as a result of a seismic event.

9.4.1.4 Tests and Inspection

The nuclear island nonradioactive ventilation system is designed to permit periodic inspection of system components. Each component is inspected prior to installation. Components of each system are accessible for periodic inspection during normal plant operation. A system air balance test and adjustment to design conditions is conducted in the course of the plant preoperational test program. Airflow rates are measured and balanced within a tolerance of ±10 percent of design flow rate in accordance with the guidelines of SMACNA HVAC systems, Testing, Adjusting and Balancing (Reference 19) except the supplemental air filtration units which are balanced in accordance with the guidelines of ASME N510 (Reference 3). Instruments are calibrated during testing. Automatic controls are tested for actuation at the proper setpoints. Alarm functions are checked for operability. Air quality within the MCR/CSA environment is confirmed to be within the guidelines of Table 1 and Appendix C, Table C-1, of Reference 32 by analyzing air samples taken during preoperational testing.

The supplemental air filtration unit, HEPA filters, and charcoal adsorbers are tested in place in accordance with ASME N510 to verify that these components do not exceed a maximum allowable bypass leakage rate. Samples of charcoal adsorbent, used or new, are periodically tested to verify a minimum charcoal efficiency of 90 percent in accordance with Regulatory Guide 1.140 (Reference 30), except that test procedures and test frequency are conducted in accordance with ASME N510.

The ductwork for the supplemental air filtration subsystem and portions of the main control room/control support area HVAC subsystem that maintain the integrity of the main control room/control support area pressure boundary during conditions of abnormal airborne radioactivity are tested for leak tightness in accordance with ASME N510, Section 6. Testing for main control room/control support area inleakage during Main Control Room/Control Support Area HVAC Subsystem operation will be conducted in accordance with ASTM E741 (Reference 38). The remaining supply and return/exhaust ductwork is tested in place for leakage in accordance with SMACNA HVAC Duct Leakage Test Manual (Reference 18).

The main control room/control support area HVAC subsystem of the nuclear island nonradioactive ventilation system (VBS) is tested and inspected in accordance with ASME/ANSI AG-1-1997 and Addenda AG-1a-2000 (Reference 201), ASME N509-1989, ASME N510-1989, and Regulatory Guide 1.140.

The VBS is tested as separate components and as an integrated system. Surveillance tests are performed to monitor the condition of the system. Testing methods include:

- Visual inspection
- Duct and housing leak tests
- Airflow capacity and distribution tests
- Air-aerosol mixing uniformity test
- HEPA filter bank and adsorber bank in-place leak tests
- Duct damper bypass tests
- System bypass tests
- Air heater performance tests
- Laboratory testing of adsorbers
- Ductwork inleakage test

Testing is performed at the frequency provided in Table 1 of ASME N510-1989.

9.4.1.5 Instrumentation Applications

The nuclear island nonradioactive ventilation system is controlled by the plant control system except for the main control room isolation valves, which are controlled by the protection and safety monitoring system. Refer to Subsection 7.1.1 for a description of the plant control and plant safety and monitoring systems. The instruments discussed below satisfy Table 4.2 of ASME N509 (Reference 2).

Temperature controllers are provided in the return air ducts to control the room air temperatures within the predetermined ranges. Temperature indication and alarms for the main control room return air, Class 1E electrical room return air, air handling unit supply air, supplemental filtration unit prefilter inlet air and charcoal adsorbers are provided to inform plant operators of abnormal temperature conditions.

Pressure differential indication and alarms are provided across each filter bank (except charcoal filters) to inform plant operators when filter changeout is necessary. Pressure differential indication and alarms are provided to control the main control room and monitor the control support area ambient room pressure differentials with respect to surrounding areas.

Radioactivity indication and alarms are provided to inform the main control room operators of gaseous, particulate, and iodine radioactivity concentrations in the main control room supply air duct. See Section 11.5 for a description of the main control room supply air duct radiation monitors and their actuation functions.

Smoke monitors are provided to detect smoke in the outside air intake duct to the main control room and the main control room and Class 1E electrical room return air ducts.

Airflow indication and alarms are provided to monitor operation of the supply and exhaust fans.

Relative humidity indication and alarms are provided to monitor the average relative humidity in the return air from the main control room/CSA areas and the inlet air to the supplemental air filtration unit charcoal filters.

Status indication is provided to monitor fans, heaters and controlled dampers.

9.4.2 Annex/Auxiliary Buildings Nonradioactive HVAC System

The annex/auxiliary buildings nonradioactive HVAC system serves the nonradioactive personnel and equipment areas, electrical equipment rooms, clean corridors, the ancillary diesel generator room and demineralized water deoxygenating room in the annex building, and the main steam isolation valve compartments, reactor trip switchgear rooms, and piping and electrical penetration areas in the auxiliary building.

9.4.2.1 Design Basis

9.4.2.1.1 Safety Design Basis

The annex/auxiliary buildings nonradioactive HVAC system serves no safety-related function and therefore has no nuclear safety design basis. System equipment and ductwork located in the nuclear island whose failure could affect the operability of safety-related systems or components are designed to seismic Category II requirements. The remaining portion of the system is nonseismic.

9.4.2.1.2 Power Generation Design Basis

The annex/auxiliary buildings nonradioactive HVAC system provides the following specific functions:

- Provides conditioned air to maintain acceptable temperatures for equipment and personnel working in the area
- Provides suitable environmental conditions for equipment in the main steam isolation valve (MSIV) compartments
- Prevents the buildup of hydrogen in non-Class 1E battery rooms to less than 2 percent hydrogen by volume
- Removes vitiated air from locker, toilet, shower facilities, and rest rooms

The system maintains the following room temperatures based on maximum and minimum normal outdoor air temperature conditions shown in Chapter 2, Table 2.0-201:

Room or Area	Temperatures (°F)
Normal Operation	
Offices, office areas, conference rooms, corridors (annex building)	73-78
Locker rooms, toilet rooms (annex building)	73-78
Security rooms and areas (annex building)	73-78
Non-Class 1E battery rooms (annex building)	60-90
Switchgear and battery charger rooms (annex building)	50-105
HVAC and mechanical equipment rooms (annex building)	50-105
Security room in mechanical equipment room (annex building)	73-78
MSIV compartments (auxiliary building)	50-105
Non-safety electrical penetration rooms (auxiliary building)	50-105
Reactor trip SWGR rooms (auxiliary building)	50-105
Valve/piping penetration room (auxiliary building)	50-105
Ancillary diesel generator room (annex building)	50-105
Demineralized water deoxygenating room	50-105
Elevator machine room	50-105
Boric acid batching room	50-105
Upset Conditions (Loss of Plant ac Electrical System)	
Switchgear rooms (annex building)	122 (maximum)
Battery charger rooms (annex building)	122 (maximum)
Ancillary diesel generator room (annex building - DG sets operating)	122 (maximum)

9.4.2.2 System Description

The annex/auxiliary buildings nonradioactive HVAC system consists of the following independent subsystems:

- General area HVAC subsystem
- Switchgear room HVAC subsystem
- Equipment room HVAC subsystem
- MSIV compartment HVAC subsystem
- Mechanical equipment areas HVAC subsystem
- Valve/Piping penetration room HVAC subsystem

The defense in depth portion of the system and selected subsystems are shown in Figure 9.4.2-1.

9.4.2.2.1 General Description

9.4.2.2.1.1 General Area HVAC Subsystem

The general area HVAC subsystem serves personnel areas in the annex building outside the security area. These areas include the men's and women's change and toilet rooms, the ALARA briefing room, offices, corridors, men's and women's rest rooms, conference rooms, and office areas. The general area HVAC subsystem consists of two 50-percent capacity supply air handling units of about 5,100 scfm each and two 50-percent capacity supply air handling units of about 10,500 scfm each, humidifiers, a ducted supply and return air system, diffusers and registers, exhaust fan, automatic controls, and accessories. The air handling units are located on the low roof of the annex building at elevation 117′-6″. The units discharge into ducted supply distribution systems which are routed through the building to provide air into the various rooms and areas served via registers. Electric heating coils are provided in the branch supply duct to the men's and women's change rooms and rest rooms for tempering the supply air.

A humidifier is provided in the system to provide a minimum space relative humidity of 35 percent.

Air from the men's and women's locker, toilet, and shower facilities in the annex building is exhausted directly to atmosphere by exhaust fans. Room air from the remaining areas served is recirculated back to the air handling unit via a ceiling return plenum and a return duct system. Outside make-up air is added to the return air stream at the air handling units to replace air exhausted from toilets and showers in the area served.

9.4.2.2.1.2 Switchgear Room HVAC Subsystem

The switchgear room HVAC subsystem serves electrical switchgear Rooms 1 and 2 in the annex building. The switchgear room HVAC system consists of two 100 percent capacity air handling units, a ducted supply and return air system, and automatic controls and accessories.

The air handling units are located in the north air handling equipment room in the annex building at elevation 135′-3″. They are connected to a common intake plenum located along the east wall adjacent to their air handling equipment room. This plenum also supplies air for the equipment room HVAC subsystem. The air handling units discharge into a common duct distribution system that is routed through the building to the rooms served. Air is returned to the air handling units from the rooms served by a return duct system.

The switchgear room HVAC subsystem is designed so that smoke can be removed after a fire by placing the system in a once-through smoke exhaust ventilation mode. See Appendix 9A for identification of fire areas.

9.4.2.2.1.3 Equipment Room HVAC Subsystem

The equipment room HVAC subsystem serves electrical and mechanical equipment rooms in the annex and auxiliary buildings. These rooms include the non-Class 1E battery charger Rooms 1 and 2, the non-Class 1E battery Rooms 1 and 2, the reactor trip switchgear Rooms I and II, the non-Class 1E penetration room on elevation 100′-0″ and the non-Class 1E penetration room on elevation 117′-6″. This subsystem also serves the rooms and areas in the annex building. These include two rest rooms, access areas, and corridors. The equipment room HVAC system consists of two 100 percent capacity air handling units, two battery room exhaust fans, a toilet exhaust fan, a ducted supply and return air system, and automatic controls and accessories.

The air handling units are located in the north air handling equipment room in the annex building at elevation 135′-3″. They are connected to a common intake plenum located along the east wall

adjacent to their air handling equipment room. This plenum also supplies air for the switchgear room HVAC subsystem. The air handling units discharge into a common duct distribution system that is routed through the buildings to the various areas served. Air is returned to the air handling units from the rooms served (except the battery rooms and rest rooms) by a return duct system. Electric reheat coils are provided in the ductwork to areas requiring close temperature control such as the security rooms and restrooms. Hot water unit heaters (VXS-MY-W01A, B, and C) are provided in the north air handling equipment room to maintain the area above 50°F.

A humidifier is provided in the branch duct to the security areas to provide a minimum space relative humidity of 35 percent.

Each non-Class 1E battery room is provided with an individual exhaust system to prevent the buildup of hydrogen gas in the room. Each exhaust system consists of an exhaust fan, an exhaust air duct and gravity back draft damper located in the fan discharge. Air supplied to the battery rooms by the air handling units is exhausted to atmosphere. Air from the rest rooms is exhausted to atmosphere by a separate exhaust fan.

The portion of the equipment room HVAC subsystem servicing the auxiliary building is designed so that smoke, hot gases, and fire suppressant will not migrate from one fire area to another to the extent that they could adversely affect safe shutdown capabilities, including operator actions. Fire or combination fire and smoke dampers are provided to isolate each fire area from adjacent fire areas during and following a fire in accordance with NFPA 90A (Reference 27) requirements. These combination smoke/fire dampers close in response to smoke detector signals or in response to the heat from a fire. See Appendix 9A for identification of fire areas.

9.4.2.2.1.4 MSIV Compartment HVAC Subsystem

The main steam isolation valve compartment HVAC subsystem serves the two main steam isolation valve compartments in the auxiliary building that contain the main steam and feedwater lines routed between the containment and the turbine building. Each compartment is provided with separate heating and cooling equipment.

The main steam isolation valve compartment HVAC subsystem consists of two 100-percent-capacity supply air handling units per compartment (VXS-MS-04A, B, C, and D) of about 3,300 scfm each with only low efficiency filters, ducted supply air distribution directly to the space served, automatic controls, and accessories for each main steam isolation valve compartment.

The supply air handling units are located directly within the space served. One unit in each compartment normally operates to maintain the temperature of the compartment. The air handling units can be connected to the standby power system, for investment protection, in the event of loss of the plant ac electrical system.

9.4.2.2.1.5 Mechanical Equipment Areas HVAC Subsystem

The mechanical equipment areas HVAC subsystem serves the ancillary diesel generator room, demineralized water deoxygenating room, boric acid batching room, upper south air handling equipment room, and lower south air handling equipment room in the annex building.

The mechanical equipment areas HVAC subsystem consists of two 50-percent capacity air handling units (VXS-MS-07A and B) with supply fans and return/exhaust fans of about 2,200 scfm each, a ducted supply and return air system, automatic controls, and accessories.

The air handling units are located in the lower south air handling unit equipment room on elevation 135′-3″ of the annex building. They are supplied from the air intake plenum #2 located at the extreme

south end of the annex building between elevation 135′-3″ and 158′. This plenum also supplies air for the radiologically controlled area ventilation system, the health physics and hot machine shop HVAC system and the containment air filtration system. The intake is not protected from tornado missiles.

The ancillary diesel generator room is supplied air from the air handling units to maintain normal design temperatures. Air supplied to the room is exhausted direct to outdoors by means of a separate exhaust fan. Ventilation and cooling for the ancillary diesel generator room when the diesel generators operate is provided by opening the doors to allow airflow into the room. Air from the ancillary diesel generator room is exhausted to the outdoors through the diesel generator radiator(s), ducting, backdraft damper(s), and hurricane louvers. There is a manual damper in the duct downstream of each diesel radiator that discharges air into the room. This manual damper can be used to control room temperature in cold weather.

9.4.2.2.1.6 Valve/Piping Penetration Room HVAC System

The valve/piping penetration room HVAC subsystem serves the valve/piping penetration room on elevation 100′-0″ of the auxiliary building. The valve/piping penetration room HVAC subsystem consists of two 100-percent-capacity air handling units (VXS-MS-08A and B) with supply fans of about 1,800 scfm each, a return air duct system, automatic controls, and accessories.

The air handling units are located directly within the space served.

9.4.2.2.2 Component Description

The annex/auxiliary buildings HVAC system is comprised of the following major components. These components are located in buildings on the Seismic Category I Nuclear Island or in the annex building. The seismic design classification, safety classification and principal construction code for Class A, B, C, or D components are listed in Section 3.2. Tables 9.4.2-1 and 9.4.2-2 provide the design parameters for major defense-in-depth components of the system.

Air Handling Units

Air handling units with integral supply and return/exhaust fans are utilized in the equipment room HVAC subsystem, switchgear room HVAC subsystem, and the mechanical equipment areas HVAC subsystem. Each air handling unit consists of a return/exhaust fan, a return/exhaust air plenum, a low efficiency filter bank, a high efficiency filter bank, a hot water heating coil with integral face/bypass damper, a chilled water cooling coil, and a supply air fan.

Supply Air Handling Units

Supply air handling units are utilized in the general area HVAC subsystem, main steam isolation valve compartment HVAC subsystem, and the valve/piping penetration room HVAC subsystem. Each air handling unit consists of a low efficiency filter bank, a hot water heating coil, a chilled water cooling coil, and a supply fan. The general area HVAC subsystem air handling unit also includes a high efficiency filter bank and has face and bypass dampers on the heating coil.

Supply and Exhaust Air Fans

The supply and exhaust fans are centrifugal type, single width single inlet (SWSI) or double width double inlet (DWDI), with high efficiency wheels and backward inclined blades to produce non-overloading horsepower characteristics. Air handling unit fans that have little or no ductwork may utilize forward curved blades. The fans are designed and rated in accordance with ANSI/AMCA 210 (Reference 4), ANSI/AMCA 211 (Reference 5), and ANSI/AMCA 300 (Reference 6).

Low Efficiency Filters and High Efficiency Filters

The low efficiency (25 percent) filters and high efficiency (80 percent) filters have a rated dust spot efficiency based on ASHRAE 52 and 126 (References 7 and 35). The filters meet UL 900 (Reference 8) Class I construction criteria.

Cooling Coils

The chilled water cooling coils are counterflow, finned tubular type. The cooling coils are designed and rated in accordance with ASHRAE 33 (Reference 11) and ANSI/ARI 410 (Reference 12).

Heating Coils

The hot water heating coils are counterflow, finned tubular type. The heating coils are designed and rated in accordance with ASHRAE 33 (Reference 11) and ANSI/ARI 410 (Reference 12).

Electric Heating Coils

The electric heating coils are multi-stage fin tubular type. The electric heating coils meet the requirements of UL 1995 (Reference 10).

Electric Unit Heaters

The electric unit heaters are single-stage or two-stage fin tubular type. The electric unit heaters are UL-listed and meet the requirements of UL 1996 (Reference 26) and the National Electric Code NFPA 70 (Reference 28).

Humidifier

The humidifier is a packaged electric steam generator type which converts water to steam and distributes it through the supply duct system. The humidifier is performance rated in accordance with ARI 640 (Reference 13).

Hot Water Unit Heaters

The hot water unit heaters consist of a fan section and hot water heating coil section factory assembled as a complete and integral unit. The unit heaters are either horizontal discharge or vertical downblast type. The coil ratings are in accordance with ANSI/ARI 410 (Reference 12).

Isolation Dampers

Isolation dampers are bubble tight, single- or parallel-blade type. The isolation dampers have spring return actuators which fail closed on loss-of-electrical power or loss-of-air pressure. The isolation dampers are constructed, qualified and tested in accordance with ANSI/AMCA 500 (Reference 14).

Shutoff, Control, Balancing, and Backdraft Dampers

Multiblade, two-position remotely operated shutoff dampers are parallel-blade type. Multiblade, control and balancing dampers are opposed-blade type. Backdraft dampers are provided to prevent backflow through ventilators, exhaust fans and the valve/piping penetration room air handling units. Air handling unit and fan shutoff dampers are designed for maximum fan static pressure at shutoff flow. Dampers meet the performance requirements of ANSI/AMCA 500 (Reference 14).

Fire Dampers

Fire dampers are provided at duct penetrations through fire barriers to maintain the fire resistance ratings of the barriers. The fire dampers meet the design and installation requirements of UL 555 (Reference 15). Fire dampers are not provided in locations where combination fire/smoke dampers are provided.

Combination Fire/Smoke Dampers

Combination fire/smoke dampers are provided at the duct penetrations through fire barriers between the annex building and the auxiliary building, and to the ICC/non-1E penetration room, to maintain the fire resistance ratings of the barriers. The combination fire/smoke dampers meet the design leakage testing, and installation requirements of UL-555S (Reference 25).

Ductwork and Accessories

Ductwork, duct supports and accessories are constructed of galvanized steel. Ductwork subject to fan shutoff pressure is structurally designed for fan shutoff pressures. Ductwork, supports and accessories meet the design and construction requirements of SMACNA Rectangular and Round Industrial Duct Construction Standards (References 16 and 34) and SMACNA HVAC Duct Construction Standards - Metal and Flexible (Reference 17).

9.4.2.2.3 System Operation

9.4.2.2.3.1 General Area HVAC Subsystem

Normal Plant Operation

During normal plant operation, all four supply air handling units and the toilet/shower and rest room exhaust fans operate continuously to maintain suitable temperatures in the areas served. The temperature of the air supplied by each handling units is controlled by individual temperature controls with their sensors located in the annex building main entrance and in selected spaces. Each temperature sensor sends a signal to a temperature controller which modulates the chilled water control valve and the face and bypass dampers across the supply air heating coil to maintain the area within the design range. The switchover between cooling and heating modes is automatically controlled by the temperature controllers.

Supplemental heating is provided for the men's/women's change room areas by an electric reheat coil located in the supply air duct to the areas served. The reheat coil operates intermittently under the control of its temperature controller with sensor located in the women's change room, which modulates the electric heating elements to maintain the space temperature in the change room areas within the design range.

The supply air is humidified by a common humidifier located in the ductwork downstream of the supply air handling units. Humidistats located in the annex building operate the humidifiers to maintain a minimum space relative humidity of 35 percent in the areas served.

The differential pressure drop across each supply unit filter bank is monitored, and individual alarms are actuated when any pressure drop rises to a predetermined level indicative of the need for filter replacement. To replace the filters on a supply unit, the affected supply fan is stopped and isolated from the duct system by means of isolation dampers. The exhaust fan for the area is also stopped. During filter replacement, the system operates at approximately 50 percent capacity. This mode of operation will maintain a slight positive pressure in the building.

Abnormal Plant Operation

The general area HVAC subsystem is not required to operate during any abnormal plant condition.

9.4.2.2.3.2 Switchgear Room HVAC Subsystem

Normal Plant Operation

During normal plant operation, one air handling unit operates continuously to maintain the indoor temperatures in the two switchgear rooms. The temperature of the air supplied by the air handling

unit is maintained at 62°F by a temperature controller based on outside ambient temperature conditions. When the outdoor air temperature is below 62°F, the temperature controller modulates the outside air, return air and exhaust air dampers of the air handling unit to mix return air and outside air in the proper proportion, and modulates the face and bypass dampers of the hot water heating coils to maintain a mixed air temperature of 62°F. A minimum amount of outside air is always provided for ventilation requirements. When the outdoor temperature is above 62°F, the outside air, return air and exhaust air dampers automatically reposition for minimum outside air and the temperature controller modulates the chilled water control valves to maintain the supply air at 62°F. The switchover between cooling and heating modes is automatically controlled by the supply air temperature controllers.

The differential pressure drop across each air handling unit filter bank is monitored and individual alarms are actuated when the pressure drop rises to a predetermined level indicative of the need for filter replacement. To replace the filters on an air handling unit, the unit is stopped and isolated from the duct system by means of isolation dampers. During filter replacement, the second air handling unit operates at full system capacity.

Abnormal Plant Operation

In the event of a loss of the plant ac electrical system, the air handling unit supply and return/exhaust fans are connected to the standby power system to provide ventilation cooling to the diesel bus switchgear. This cooling permits the switchgear to perform its defense in depth functions in support of standby power system operation. In this mode of operation, the switchgear rooms are cooled utilizing once-through ventilation using outdoor air. When in the once-through ventilation mode, the switchgear rooms will be maintained at or below 122°F. Equipment in these rooms that operate following a loss of the plant ac electrical system are designed for continuous operation at this temperature. To maintain the areas above freezing, the mixing dampers will modulate to maintain a supply air temperature of 62°F for outdoor temperatures below 62°F. For outdoor temperature above 62°F, the outside air, return air, and exhaust air dampers are positioned for a once-through flow.

In the event of a fire in a non-1E electrical switchgear room, the combination fire/smoke dampers close automatically to isolate the affected fire area in response to heat from the fire or upon receipt of a smoke signal from an area smoke detector. The VXS subsystem continues to provide ventilation/cooling to the remaining switchgear room and maintains the remaining areas at a slightly positive pressure.

9.4.2.2.3.3 Equipment Room HVAC Subsystem

Normal Plant Operation

During normal plant operation, one air handling unit and both battery room exhaust fans operate continuously to maintain the indoor temperatures in the equipment and security access areas served by the system.

The temperature of the air supplied by the air handling unit is maintained at 62°F by a temperature controller based on outside ambient temperature conditions. When the outdoor air temperature is below 62°F, the temperature controller modulates the outside air, return air and exhaust air dampers of the air handling unit to mix return air and outside air in the proper proportion, and modulates the face and bypass dampers of the hot water heating coils to maintain a mixed air temperature of 62°F. A minimum amount of outside air is always provided for ventilation requirements. When the outdoor air temperature is above 62°F, the outside air, return air and exhaust air dampers automatically reposition for minimum outside air and the temperature controller modulates the chilled water control valves to maintain the supply air at 62°F. The switchover between cooling and heating modes is automatically controlled by the supply air temperature controllers.

Electric reheat coils serving security (rooms 40305 and 40306) are controlled by temperature controllers with sensors located in the areas served. The temperature sensor sends a signal to a temperature controller which modulates the electric heating elements to maintain the security access areas at their design temperatures. Hot water unit heaters operate intermittently to provide supplemental heating for the north air handling equipment room to maintain the area temperature above 50°F.

A humidistat located in the security access area intermittently operates the humidifier to maintain the security office area at a minimum space relative humidity of 35 percent.

The differential pressure drop across each air handling unit filter bank is monitored, and individual alarms are actuated when the pressure drop rises to a predetermined level indicative of the need for filter replacement. To replace the filters of an air handling unit, the unit is stopped and isolated from the duct system by means of isolation dampers. During filter replacement, the second air handling unit operates at full system capacity.

A temperature controller opens the outside air intake and starts and stops the elevator machine room exhaust fan as required to maintain room design temperature conditions. A local thermostat controls the electric unit heater.

Abnormal Plant Operation

In the event of a loss of the plant ac electrical system, the air handling unit supply and return/exhaust fans are connected to the standby power system to provide ventilation cooling to the dc switchgear and inverters. This cooling permits that equipment to perform its defense in depth functions. In this mode of operation, the rooms are cooled utilizing once-through ventilation using outdoor air. When in the once-through ventilation mode, the dc switchgear and inverter areas will be maintained at or below 122°F. Equipment in those areas that operate following a loss of the plant ac electrical system are designed for continuous operation at this temperature. To maintain the areas above freezing, the mixing dampers will modulate to maintain a supply air temperature of 62°F for outdoor temperatures below 62°F. For outdoor temperature above 62°F, the outside air, return air, and exhaust air dampers are positioned for a once-through flow.

9.4.2.2.3.4 MSIV Compartment HVAC Subsystem

Normal Plant Operation

During normal plant operation, one of the main steam isolation valve compartment air handling units in each compartment operates continuously in a recirculation mode to maintain the indoor temperature in the equipment area served by the system. A temperature controller modulates the chilled water and hot water control valves serving the operating unit to maintain the compartment temperature at or less than 105°F and above a minimum of 50°F. The switchover between cooling and heating modes is automatically controlled by the area temperature controller.

The differential pressure drop across each air handling unit filter bank is monitored and individual alarms are actuated when the pressure drop rises to a predetermined level indicative of the need for filter replacement. An air handling unit may be shutdown for filter replacement or other maintenance as required, with the other air handling unit in the same compartment operating to maintain the area temperature.

Abnormal Plant Operation

The main steam isolation valve compartment HVAC subsystem is not required to operate during abnormal plant conditions.

9.4.2.2.3.5 Mechanical Equipment Areas HVAC Subsystem

During normal plant operation, the air handling units operate continuously to maintain the indoor temperatures in the areas served. The temperature of the air supplied by each air handling unit is controlled by individual temperature controls with their sensors located in the upper south air handling equipment room. The temperature sensor sends a signal to a temperature controller which modulates the face and bypass dampers across the supply air heating coil and the chilled water control valve to maintain the mechanical equipment areas within the design temperature range. A constant volume of outside air is used to provide ventilation and to maintain the area at a slight positive pressure with respect to the surroundings. The switchover between cooling and heating modes is automatically controlled by the area temperature controller.

Differential pressure drop across each air handling unit filter bank is monitored, and individual alarms are actuated when pressure drop rises to a predetermined level indicative of the need for filter replacement. During filter replacement, the system operates at approximately 50 percent capacity. To replace the filters of an air handling unit, the unit is stopped and isolated from the duct system by means of isolation dampers. To replace the filters of an air handling unit, the unit is stopped and isolated from the duct system by means of isolation dampers.

The exhaust fan for the ancillary diesel generator room operates continuously for room ventilation.

Abnormal Plant Operation

The mechanical equipment areas HVAC subsystem is not required to operate during abnormal plant conditions.

When the ancillary diesel generator sets are operated, a manual damper is opened as required and the outside door is opened to maintain acceptable temperatures.

9.4.2.2.3.6 Valve/Piping Penetration Room HVAC Subsystem

Normal Plant Operation

During normal plant operation, one air handling unit operates continuously in a recirculation mode to maintain the indoor temperature in the room. A temperature controller modulates the chilled water control valve and opens and closes the hot water control valve serving the operating unit to maintain the area temperature at or less than 105°F and above a minimum of 50°F. The switchover between cooling and heating modes is automatically controlled by the area temperature controller.

The differential pressure drop across each air handling unit filter bank is monitored, and individual alarms are actuated when the pressure drop rises to a predetermined level indicative of the need for filter replacement.

Abnormal Plant Operation

The valve/piping penetration room HVAC subsystem is not required to operate during abnormal plant conditions.

9.4.2.3 Safety Evaluation

The annex/auxiliary buildings nonradioactive HVAC system has no safety-related function and therefore requires no nuclear safety evaluation.

9.4.2.4 Tests and Inspections

The annex/auxiliary buildings nonradioactive HVAC system is designed to permit periodic inspection of system components. Each component is inspected prior to installation. Components of each system are accessible for periodic inspection during normal plant operation. A system air balance test and adjustments to design conditions are made during the plant preoperational test program. Air flow rates are measured and balanced in accordance with the guidelines of SMACNA HVAC Systems – Testing, Adjusting, and Balancing (Reference 19). Instruments are calibrated during testing. Automatic controls are tested for actuation at the proper setpoints. Alarm functions are checked for operability.

9.4.2.5 Instrumentation Applications

The annex/auxiliary buildings nonradioactive HVAC system operation is controlled by the plant control system (PLS). Refer to Subsection 7.1.1 for a discussion of the plant control system.

Temperature controllers and thermostats maintain the proper space temperatures. Supply air temperature is controlled by either sensing local room temperature or by sensing the supply air temperature in the air handling unit discharge duct, depending on the subsystem. Unit heaters are controlled by local thermostats. Temperature indication and alarms are accessible locally via the plant control system.

Temperature is indicated for each air handling unit supply air discharge duct, except for local recirculation units such as those in the main steam isolation valve compartment and valve/piping penetration room.

Operational status of fans is indicated in the main control room. The fans and air handling units can be placed into operation or shutdown from the main control room or locally.

Differential pressure indication is provided for each of the filters in the air handling units and an alarm for high pressure drop is provided for each air handling unit.

Airflow is indicated for the air handling unit and exhaust fan discharge ducts. Alarms are provided for low air flow rates in the fan discharge ducts.

An alarm is provided for smoke in discharge ducts from the air handling units.

Position indicating lights are provided for automatic dampers.

9.4.3 Radiologically Controlled Area Ventilation System

The radiologically controlled area ventilation system (VAS) serves the fuel handling area of the auxiliary building, and the radiologically controlled portions of the auxiliary and annex buildings, except for the health physics and hot machine shop areas which are provided with a separate ventilation system (VHS).

9.4.3.1 Design Basis

9.4.3.1.1 Safety Design Basis

The radiologically controlled area ventilation system serves no safety-related function and therefore has no nuclear safety design basis. System equipment and ductwork located in the nuclear island whose failure could affect the operability of safety-related systems or components are designed to seismic Category II requirements. The remaining portion of the system is nonseismic.

9.4.3.1.2 Power Generation Design Basis

The radiologically controlled area ventilation system provides the following functions:

- Provides ventilation to maintain the equipment rooms within their design temperature range
- Provides ventilation to maintain airborne radioactivity in the access areas at safe levels for plant personnel
- Maintains the overall airflow direction within the areas it serves from areas of lower potential airborne contamination to areas of higher potential contamination
- Maintains each building area at a slightly negative pressure to prevent the uncontrolled release of airborne radioactivity to the atmosphere or adjacent clean plant areas
- Automatically isolates selected building areas from the outside environment by closing the supply and exhaust duct isolation dampers and starting the containment air filtration system when high airborne radioactivity in the exhaust air duct or high ambient pressure differential is detected. See Subsection 9.4.7 for a description of the containment air filtration system.

The system maintains the following room temperatures based on the maximum and minimum normal outside air temperature conditions shown in Chapter 2, Table 2.0-201:

Access and Equipment Areas	Temperatures (°F)
Auxiliary/Annex Building Subsystem	
Degasifier column	50-130
RNS and CVS pump rooms (pumps not operating)	50-104
RNS and CVS pump rooms (pumps operating)	50-130
Containment purge exhaust filter rooms (fans not operating)	50-104
Containment purge exhaust filter rooms (fans operating)	50-130
Liquid radwaste tank rooms	50-130
Liquid radwaste pump rooms	50-104
HVAC equipment room	50-104
Gaseous radwaste equipment rooms	50-104
Spent fuel pool pump and heat exchanger rooms	50-104
Annex building staging and storage area	50-104
Other corridors and staging areas	50-104
Fuel Handling Area Ventilation Subsystem	
Rail car bay/filter storage area	50-104
Spent resin equipment rooms	50-130
Corridors and access areas	50-104
Occupied Areas	
Fuel Handling Area Ventilation Subsystem	
Fuel handling area	50-96
Auxiliary/Annex Building Ventilation Subsystem	
Radiation chemistry laboratory	73-78
Primary sample room	50-104
Security rooms	73-78

9.4.3.2 System Description

The radiologically controlled area ventilation system consists of the following subsystems:

- Auxiliary/annex building ventilation subsystem
- Fuel handling area ventilation subsystem

The defense in depth portion of the system is shown in Figure 9.4.3-1.

9.4.3.2.1 General Description

9.4.3.2.1.1 Auxiliary/Annex Building Ventilation Subsystem

The auxiliary/annex building ventilation subsystem serves radiologically controlled equipment, piping and valve rooms and adjacent access and staging areas. See Figure 9.4.3-1, sheet 2 of 3, for a complete listing of rooms and corridors serviced by this subsystem. The auxiliary/annex building ventilation subsystem consists of two 50 percent capacity supply air handling units of about 18,000 scfm each, a ducted supply and exhaust air system, isolation dampers, diffusers and registers, exhaust fans, automatic controls and accessories. The supply air handling units are located in the south air handling equipment room of the annex building at elevation 158′-0″. They are connected to the air intake plenum #3 located in the extreme south end of the annex building. This common intake plenum is described in Subsection 9.4.7. The units discharge into a ducted supply distribution system which is routed through the radiologically controlled areas of the auxiliary and annex buildings. The supply and exhaust ducts have isolation dampers that close to isolate the auxiliary and annex buildings from the outside environment when high airborne radioactivity is detected in the exhaust air duct. The supply and exhaust ducts are configured so that two building zones may be independently isolated. The annex building staging and storage area, containment air filtration exhaust rooms, containment access corridor, and adjacent auxiliary building staging, equipment areas, middle annulus, middle annulus access room, and security rooms are aligned to one zone. The other zone includes the remaining rooms and corridors shown in Figure 9.4.3-1 sheet 2 of 3, including but not limited to the radiation chemistry laboratory, primary sample room, spent fuel pool cooling water pump and heat exchanger rooms, normal residual heat removal pump and heat exchanger rooms, CVS makeup pump room, lower annulus, and various radwaste equipment rooms, pipe chases, and access corridors. A radiation monitor is located in the exhaust air duct from each zone.

The two 50 percent capacity exhaust air fans sized to allow the system to maintain a negative pressure are located in the upper radiologically controlled area ventilation system equipment room at elevation 145′-9″ of the auxiliary building. The exhaust air ductwork is routed to minimize the spread of airborne contamination by directing the supply airflow from the low radiation access areas into the radioactive equipment and piping rooms with a greater potential for airborne radioactivity. Additionally, the exhaust air ductwork is connected to the radioactive waste drain system (WRS) sump to maintain the sump atmosphere at a negative air pressure to prevent the exfiltration of potentially contaminated air into the surrounding area. The sump vent line is constructed of pipe, which is routed upward from the sump to the interface with the HVAC system. The exhaust air ductwork is connected to the radwaste effluent holdup tanks to prevent the potential buildup of airborne radioactivity or hydrogen gas within these tanks. The effluent holdup tanks have an overflow line to the WRS from a nozzle on the side of the tank, and a vent line from a nozzle on the top of the tank. The vent line is constructed of pipe, and is routed upward from the tank to the interface with the HVAC system. The exhaust fans discharge the exhaust air into the plant vent for monitoring of offsite airborne radiological releases.

The ventilation airflow dilutes potential airborne contamination to maintain the concentration at the site boundary within 10 CFR 20 (Reference 21) allowable effluent concentration limits and the

internal room airborne concentrations within 10 CFR 20 occupational derived air concentration (DAC) limits during normal plant operation.

Unit coolers are located in the normal residual heat removal system (RNS) and chemical and volume control system (CVS) pump rooms because they have significant cooling loads on an intermittent basis when large equipment is operating. Each unit cooler is sized to accommodate 100 percent of its corresponding pump cooling load. The unit coolers are provided with chilled water from redundant trains of the central chilled water system (VWS) low capacity subsystem. The normal residual heat removal pump room unit coolers have two cooling coils per unit cooler so that chilled water supplied by either train A or train B alone can support concurrent operation of both normal residual heat removal system pumps. The two chemical and volume control makeup pump room unit coolers are connected to redundant trains of the chilled water system; however, operation of either the train A or train B unit cooler alone maintains the common makeup pump room temperature conditions and supports operation of either makeup pump. Condensation from these cooling coils drains to the WRS.

Heating coils are located in the supply air ducts serving plant areas that require supplemental heating during periods of cold outside air temperature conditions. The heating coils are supplied with hot water from the hot water heating system (VYS). The radiation chemistry laboratory and security room supply air ducts are provided with local electric coils and humidifiers to maintain the environmental conditions within the areas suitable for personnel comfort. Electric unit heaters provide supplemental heating in the middle annulus.

The upper annulus is separated from the middle annulus area of the auxiliary building by a concrete floor section and flexible seals that connects the containment steel shell to the shield building. The annulus seal provides a passive barrier during normal plant operation or when the auxiliary building is isolated, preventing the exfiltration of unmonitored releases from the middle annulus to the environment.

9.4.3.2.1.2 Fuel Handling Area Ventilation Subsystem

The fuel handling area ventilation subsystem serves the fuel handling area, rail car bay/filter storage area, resin transfer pump/valve room, spent resin tank room, waste disposal container area, WSS (spent resin) valve/piping area and elevator machine room. The fuel handling area ventilation subsystem consists of two 50 percent capacity supply air handing units of about 9,500 scfm each, a ducted supply and exhaust air system, isolation dampers, diffusers, registers, exhaust fans, automatic controls and accessories. Hot water heating coils supplied with water from the hot water heating system (VYS) and cooling coils supplied with water from the central chilled water system (VWS) are used to maintain ambient room temperatures within the normal range. The ventilation airflow capacity is designed to maintain environmental conditions that support worker efficiency during fuel handling operations based on a maximum wetbulb globe temperature of 80°F (96°F drybulb) as defined by EPRI NP-4453 (Reference 22). The supply air handling units are located in the south air handling equipment room of the annex building at elevation 135′-3″. They are connected to the air intake plenum #2 located at the south end of the annex building. This common intake plenum is described in Subsection 9.4.2. The units discharge into a ducted supply distribution system which is routed to the fuel handling and rail car bay/filter storage areas of the auxiliary building. The supply and exhaust ducts are provided with isolation dampers that close when high airborne radioactivity in the exhaust air or high pressure differential with respect to the outside atmosphere is detected.

The two 50 percent capacity exhaust air fans sized to allow the system to maintain a negative pressure are located in the upper radiologically controlled area ventilation system equipment room at elevation 145′-9″ of the auxiliary building. The supply and exhaust ductwork is arranged to exhaust the spent fuel pool plume and to provide directional airflow from the rail car bay/filter storage area into

the spent resin equipment rooms. The exhaust fans discharge the normally unfiltered exhaust air into the plant vent for monitoring of offsite airborne gaseous and other radiological releases.

The ventilation airflow dilutes potential airborne contamination to maintain the concentration at the site boundary within 10 CFR 20 (Reference 21) allowable effluent concentration limits and the internal room airborne concentrations within 10 CFR 20 occupational derived air concentration (DAC) limits during normal plant operation.

9.4.3.2.2 Component Description

The radiologically controlled area ventilation system is comprised of the following major components. These components are located in buildings on the Seismic Category I Nuclear Island and the Seismic Category II portion of the annex building. The seismic design classification, safety classification and principal construction code for Class A, B, C, or D components are listed in Section 3.2. Table 9.4.3-1 provides design parameters for major defense in depth components in the system.

Supply Air Handling Units

Each supply air handling unit consists of a low efficiency filter bank, a high efficiency filter bank, a hot water heating coil bank, a chilled water cooling coil bank, and a supply fan.

Supply and Exhaust Air Fans

The supply and exhaust air fans are centrifugal type, single width single inlet (SWSI) or double width double inlet (DWDI), with high efficiency wheels and backward inclined blades to produce non-overloading horsepower characteristics. The fans are designed and rated in accordance with ANSI/AMCA 210 (Reference 4), ANSI/AMCA 211 (Reference 5), and ANSI/AMCA 300 (Reference 6).

Unit Coolers

Each unit cooler consist of a low efficiency filter bank, a chilled water cooling coil bank and a supply fan. The normal residual heat removal system pump room unit coolers have redundant cooling coil banks. The principal construction code is the manufacturer's standard.

Low and High Efficiency Filters

The low efficiency (25 percent) filters and high efficiency (80 percent) filters have a rated dust spot efficiency based on ASHRAE 52 and 126 (References 7 and 35). The filters minimum average dust spot efficiencies for the defense in depth filters are shown in Table 9.4.3-1. The filters meet UL 900 (Reference 8) Class I construction criteria.

Electric Unit Heaters

The electric unit heaters are single-stage or two-stage fin tubular type. The electric unit heater are UL-listed and meet the requirements of UL-1996 (Reference 26) and National Electric Code (Reference 28).

Hot Water Heating Coils

The hot water heating coils are finned tubular type. The outside supply air heating coils are provided with integral face and bypass dampers to prevent freeze damage when modulating the heat output. Coils are performance rated in accordance with ANSI/ARI 410 (Reference 12).

Electric Heating Coils

The electric heating coils are multistage fin tubular type. The electric heating coils meet the requirements of UL 1995 (Reference 10).

Cooling Coils

The chilled water cooling coils are counterflow, finned tubular type. The cooling coils are designed and rated in accordance with ASHRAE 33 (Reference 11) and ANSI/ARI 410 (Reference 12).

Humidifier

The humidifier is a packaged electric steam generator type which converts water to steam and distributes it through the supply duct system. The humidifier is performance rated in accordance with ARI 640 (Reference 13).

Fire Dampers

Fire dampers are provided at duct penetrations through fire barriers to maintain the fire resistance rating of the barriers. The fire dampers meet the design, testing and installation requirements of UL-555 (Reference 15).

Shutoff and Balancing Dampers

Multiblade, two-position remotely operated shutoff dampers are parallel-blade type. Multiblade, balancing dampers are opposed-blade type. Air handling unit and fan shutoff dampers are designed for maximum fan static pressure at shutoff flow and meet the performance requirements of ANSI/AMCA 500 (Reference 14).

Isolation Dampers

Isolation dampers are bubble tight, single- or parallel-blade type. The isolation dampers have spring return actuators which fail closed on loss of electrical power or loss of air pressure. The isolation dampers are constructed, qualified and tested in accordance with ANSI/AMCA 500 (Reference 14).

Ductwork and Accessories

Ductwork, duct supports and accessories are constructed of galvanized steel. Ductwork subject to fan shutoff pressure is structurally designed for fan shutoff pressures. Ductwork, supports and accessories meet the design and construction requirements of SMACNA Rectangular and Round Industrial Duct Construction Standards (References 16 and 34) and SMACNA HVAC Duct Construction Standard - Metal and Flexible (Reference 17).

9.4.3.2.3 System Operation

9.4.3.2.3.1 Auxiliary/Annex Building Ventilation Subsystem

Normal Plant Operation

During normal plant operation, both supply air handling units and both exhaust fans operate continuously to ventilate the areas served on a once-through basis. The supply airflow rate is modulated to maintain the areas served at a slightly negative pressure differential with respect to the outside environment. The exhaust air is unfiltered and directed to the plant vent for discharge and monitoring of offsite gaseous releases.

The temperature of the supply air is controlled by temperature sensors located in the supply air ducts. When the supply air temperature is low, the face and bypass dampers across the supply air hot water heating coil are modulated to heat the supply air. Local thermostats operate supply duct heating coils and unit heaters to provide supplemental heating for building areas that have conductive heat loss to the outside environment during periods of cold outside temperature conditions. When the supply air temperature is high, the flow of chilled water is modulated to cool the supply air. The ventilation air is continuously monitored by smoke monitors located in the common ductwork downstream of the supply air handling units and upstream of the exhaust fans.

A supply air handling unit is automatically shut down if one of the following conditions is detected:

- Airflow rate of the fan is below a predetermined setpoint
- Supply air temperature is below a predetermined setpoint

Each chemical and volume control system makeup pump and normal residual heat removal system pump unit cooler automatically starts whenever the associated pump receives a start signal or a high room temperature signal.

The gaseous radwaste equipment areas have sufficient ventilation to remove hydrogen gas that may leak from the radwaste equipment into the equipment rooms to maintain the concentration of hydrogen below a safe level of about 1 percent. Instrumentation available to monitor hydrogen concentration is listed in Table 11.3-2.

Abnormal Plant Operation

If high airborne radioactivity is detected in the exhaust air from the auxiliary or annex buildings, the supply and exhaust duct isolation dampers automatically close to isolate the affected area from the outside environment. The containment air filtration system mitigates the exfiltration of unfiltered airborne radioactivity by maintaining the isolated zone at a slightly negative pressure with respect to the outside environment and adjacent unaffected plant areas. The auxiliary/annex building ventilation subsystem remains in operation at a reduced capacity if either the auxiliary or annex building is not isolated. A disruption in the normal ventilation airflow rate that causes a high pressure differential with respect to the outside environment causes the same automatic actuations. The containment air filtration system maintains a slightly negative pressure differential with respect to the outside environment until operation of the auxiliary/annex building ventilation subsystem is restored. Refer to Subsection 9.4.7 for a description of the containment air filtration system.

If smoke is detected in the supply or exhaust air ducts, an alarm is initiated in the main control room. The auxiliary/annex building ventilation subsystem remains in operation unless plant operators determine that there is a need to manually shut down the subsystem. In the event of a fire occurring within the auxiliary or annex buildings, local fire dampers automatically isolate the HVAC ductwork penetrating the fire area when the local air temperature exceeds predetermined setpoints.

In the event of a loss of the plant ac electrical system, the unit coolers serving the normal residual heat removal, and chemical and volume control pump rooms can be powered by the onsite standby diesel generators.

9.4.3.2.3.2 Fuel Handling Area Ventilation Subsystem

Normal Plant Operation

During normal plant operation, both supply air handling units and both exhaust fans operate continuously to ventilate the areas served on a once-through basis. The supply airflow rate is modulated to maintain the areas served at a slightly negative pressure differential with respect to the outside environment. The exhaust air is unfiltered and directed to the plant vent for discharge and monitoring of offsite gaseous releases.

The temperature of the supply air is controlled by temperature sensors located in the supply air ducts. When the supply air temperature is low, the face and bypass dampers across the supply air hot water heating coil are modulated to heat the supply air. A local thermostat provides supplemental heating in the rail car bay/filter storage area by controlling a supply duct heating coil. When the supply air temperature is high, the flow of chilled water is modulated to cool the supply air. The ventilation air is continuously monitored by a smoke monitor located in the common ductwork downstream of the supply air handling units and by a monitor upstream of the exhaust fans.

A supply air handling unit is automatically shut down if one of the following conditions is detected:

- Airflow rate of the operating fan is below a predetermined setpoint
- Supply air temperature is below a predetermined setpoint

Abnormal Plant Operation

If high airborne radioactivity is detected in the exhaust air from the fuel handling area, the supply and exhaust duct isolation dampers automatically close to isolate the fuel handling area from the outside environment. The containment air filtration system mitigates exfiltration of unfiltered airborne radioactivity by maintaining the isolated zone at a slightly negative pressure differential with respect to the outside environment and adjacent unaffected plant areas. A disruption in the normal ventilation airflow rate that causes a high pressure differential with respect to the outside environment causes the same automatic actuations. The containment air filtration system maintains a slightly negative pressure differential with respect to the outside environment until operation of the fuel handling area ventilation subsystem is restored. Refer to Subsection 9.4.7 for a description of the containment air filtration system.

If smoke is detected in the supply or exhaust air ducts, an alarm is initiated in the main control room. The fuel handling area subsystem remains in operation unless plant operators determine that there is a need to manually shut down the subsystem. In the event of a fire occurring within the fuel handling area, fire dampers automatically isolate the HVAC ductwork penetrating this fire area when the local air temperature exceeds predetermined setpoints.

9.4.3.3 Safety Evaluation

The radiologically controlled area ventilation system has no safety-related function and therefore requires no nuclear safety evaluation.

The isolation dampers for the fuel handling area, auxiliary and annex buildings are provided to help keep normal plant releases below 10 CFR 20 (Reference 21) limits and 10 CFR 50 Appendix I (Reference 20) guidelines in the event of an abnormal release of airborne radioactivity.

9.4.3.4 Tests and Inspections

The radiologically controlled area ventilation system is designed to permit periodic inspection of system components. Each component is inspected prior to installation. Components of each system are accessible for periodic inspection during normal plant operation. A system air balance test and adjustment to design conditions is conducted in the course of the plant preoperational test program. Airflow rates are measured and balanced in accordance with the guidelines of SMACNA HVAC Systems – Testing, Adjusting and Balancing (Reference 19). Instruments are calibrated during testing. Automatic controls are tested for actuation at the proper setpoints. Alarm functions are checked for operability.

9.4.3.5 Instrumentation Applications

The radiologically controlled area ventilation system is controlled by the plant control system (PLS). Refer to Subsection 7.1.1 for a discussion of the plant control system.

Temperature controllers maintain the proper air temperatures and provide indication and alarms. Main control room temperature indication is provided for the normal residual heat removal system pump rooms, and the chemical and volume control makeup pump room to allow room temperatures to be verified during pump operation without requiring personnel access to these rooms.

Operational status of fans and dampers is indicated in the main control room. Fans and air handling units can be placed into operation or shut down from the main control room.

Differential pressure indication and high differential pressure alarms are provided for the filters in the air handling units and room coolers. Pressure differential indication and alarms are provided via instruments (VAS-030, VAS-032, and VAS-033) to control the negative pressure in the radiologically controlled areas of the auxiliary and annex buildings.

Radioactivity indication and alarms are provided to inform the main control room operators of gaseous radioactivity concentrations in the exhaust ducts from the fuel handling area and radiologically controlled areas of the auxiliary and annex buildings.

Flow indication and alarms are provided to alert plant operators to equipment malfunctions. Smoke alarms are provided.

9.4.4 Balance-of-Plant-Interface

Not applicable to AP1000.

9.4.5 Engineered Safety Features Ventilation System

Not applicable to AP1000.

9.4.6 Containment Recirculation Cooling System

The containment recirculation cooling system controls building air temperature and humidity to provide a suitable environment for equipment operability during normal operation and shutdown.

9.4.6.1 Design Basis

9.4.6.1.1 Safety Design Basis

The containment recirculation cooling system serves no safety-related function and therefore has no nuclear safety design basis. The containment recirculation system is not required to mitigate the consequences of a design basis accident or loss of coolant accident. System equipment and ductwork whose failure could affect the operability of safety-related systems or components are designed to seismic Category II requirements. The remaining portion of the system is nonseismic.

9.4.6.1.2 Power Generation Design Basis

The containment recirculation cooling system provides the following functions:

- Controls the containment thermal environment to maintain an average bulk air temperature below 120°F during normal operation
- Controls the containment thermal environment to maintain an average bulk air temperature below 70°F and above 50°F for personnel accessibility and equipment operability during refueling and plant shutdown
- Maintains a homogeneous containment temperature and pressure during containment integrated leak rate testing (ILRT)
- Maintains a homogeneous containment temperature and pressure during a loss of the plant ac electrical system

- Controls the reactor cavity area average concrete temperature to less than 150°F with a maximum local area temperature of 200°F

9.4.6.2 System Description

The containment recirculation cooling system is shown in Figure 9.4.6-1.

9.4.6.2.1 General Description

The containment recirculation cooling system is comprised of two 100 percent capacity skid-mounted fan coil unit assemblies with a total of four 50 percent capacity fan coil units which connect to a common duct ring header and distribution system. Each fan coil unit contains a fan and associated cooling coil banks. The two fan coil unit assemblies are located on a platform at elevation 153′-0″, approximately 180 degrees apart to provide a proper return air and mixing pattern through the ring header. The top of the ring header is approximately at elevation 176′-6″. The ring header and the fan assemblies are designed to provide uniform air and temperature distribution inside the containment, considering the possibility that one fan coil assembly may be out of service.

The cross-connections between the central chilled water system piping for containment cooling and hot water heating system piping for containment heating are located outside the containment. The water piping inside containment is common to both the central chilled water system and hot water heating system.

9.4.6.2.2 Component Description

The containment recirculation cooling system is comprised of the following components. These components are located in buildings on the Seismic Category I Nuclear Island. Table 9.4.6-1 provides design parameters for the major components of the system.

Containment Recirculation Fan Coil Units

Each fan coil unit assembly consists of two separate but physically connected 50 percent capacity fan coil units. Each fan coil unit assembly is comprised of a return air mixing plenum section with a physical barrier in the middle and three cooling coils attached to the sides of each plenum section. The cooling coils are counterflow finned tubular type. The cooling coils are rated and meet the performance requirements in accordance with ANSI/ARI 410 (Reference 12) and ASHRAE 33 (Reference 11).

The recirculation fans are vane axial upblast type, direct driven with a high efficiency wheel, adjustable blades and an inlet bell. The fans are mounted vertically on top of the mixing air plenum section. The fans are designed with a non-overloading two-speed motor. The high speed is used during normal operation and the low speed is used during high ambient air density operating conditions such as the integrated leak rate testing. The fans are designed and rated in accordance with ANSI/AMCA 210 (Reference 4), ANSI/AMCA 211 (Reference 5), and ANSI/AMCA 300 (Reference 6). Fans are factory tested and rated for performance in accordance with ANSI/AMCA 210, ANSI/AMCA 211 and ANSI/AMCA 300.

Pressure Relief Damper

Pressure relief dampers relieve high pressure differential across the ductwork to protect the equipment or components from possible damage resulting from abnormal containment pressure transients. The pressure relief dampers are the weight loaded type. The damper(s) will be placed in their standard design positions during final duct layout. They will be located so that the entire containment ring duct can be relieved without damage. They meet the performance and testing requirements of ANSI/AMCA-211 (Reference 5) and ANSI/AMCA-500 (Reference 14).

Ductwork and Accessories

Ductwork, accessories, and duct supports are constructed of galvanized steel and structurally designed to accommodate fan shutoff pressures. The ductwork meets the design, testing and construction requirements according to SMACNA HVAC Duct Construction Standards – Metal and Flexible (Reference 17).

Balancing and Backdraft Dampers

Multiblade, balancing dampers are opposite-blade type. Backdraft dampers are provided to prevent reverse flow through the standby fan while the redundant fan is operating. The backdraft dampers also allow start up of the standby fan while the redundant fan remains in operation. The balancing and backdraft dampers are designed for the same differential pressure as the duct section in which they are located and meet the performance requirements in according with ANSI/AMCA 211 (Reference 5) and ANSI/AMCA500 (Reference 14).

9.4.6.2.3 System Operation

Normal Plant Operation

During normal plant operation, one of the two 50 percent capacity fans in each fan coil unit assembly draws air from the upper levels of the operating floor and delivers cooling air through the ring duct and the secondary ductwork distribution system to the cubicles, compartments, and access areas above and below the operating floor. In addition, cooling air is delivered to the reactor cavity and reactor support areas to maintain appropriate local area and concrete temperatures. The normal supply temperature is 60°F in order to meet the environmental design requirements during various modes of operation.

As the supply air absorbs the heat released from various components inside containment, return air rises through vertical passages and openings due to its lower density to the upper containment level where it is again drawn into the fan coil units, cooled, dehumidified, and recirculated.

The standby fan coil units will be started automatically if one of the following events occurs:

- Air discharge flow rate from the operating fans decreases to a predetermined setpoint
- Air discharge temperature from the operating fan coil unit is above or below a predetermined setpoint
- Electrical and/or control power is lost

Fan coil unit supply fans are connected to 480V buses with backup power supply from the onsite standby diesel generators. Following a reactor shutdown when the outside air temperature is below a predetermined temperature, the fan coil units cooling water supply will be manually realigned by the operators from the central chilled water system to the hot water heating system. Refer to Subsection 9.2.7 for further details.

Shutdown and Refueling Operation

During reactor shutdown, the system maintains the average bulk air temperature within appropriate limits for personnel access and maintenance. In addition, a steam generator maintenance space ventilation subsystem with a portable exhaust air filtration unit is available. The maintenance ventilation subsystem is designed to protect maintenance personnel and to control the spread of airborne contamination from the steam generator compartments to the other containment areas. The steam generator maintenance space ventilation subsystem consists of permanently installed exhaust ductwork with flexible hose connections in the vicinity of the steam generator channel heads. The

other end of ductwork can be connected to a portable exhaust air filtration unit. During maintenance ventilation subsystem operation, flexible hoses can be connected to the exhaust ductwork to allow the portable exhaust air filtration unit to clean up and exhaust the compartment air to containment atmosphere, the supply air distribution system to each steam generator compartment is isolated by closing dampers. Local exhaust connections with flexible hoses can be connected to the maintenance ventilation subsystem ductwork or piping to be used for clean up of localized airborne contamination.

Integrated Leak Rate Testing Operation

During integrated leak rate testing, fan coil unit operation is controlled by the main control room operator. The fan coil unit vaneaxial fans are operated at low speed to prevent the fan motors from exceeding their rated horsepower while equalizing the containment air temperature and pressure which could affect the containment integrated leak rate testing results. The recirculation fan coil units draw air from the upper levels of the operating floor and deliver airflow through the ring header and its distribution ductwork that is connected to equipment compartments, cubicles, and access areas above and below the operating floor.

Abnormal Plant Operation

The containment recirculation system is not required to mitigate the consequences of a design basis fuel handling accident or a loss of coolant accident. If the system is available following abnormal operational transients, it can be operated at reduced speed for post-event recovery operations to lower the containment temperature and pressure.

The power supplies to the containment recirculation cooling system are provided by the plant ac electrical system and the onsite standby diesel generators. In the event of a loss of the plant ac electrical system, the containment recirculation components can be connected to the onsite standby diesel generators in accordance with the optional electrical load sequencing.

9.4.6.3 Safety Evaluation

The containment recirculation cooling system has no safety function and therefore requires no nuclear safety evaluation. The containment recirculation cooling system is designed to preclude damage to safety-related systems, structures, or components as a result of a seismic event.

9.4.6.4 Tests and Inspections

The containment recirculation cooling system is designed to permit periodic inspection of system components. Each component is inspected prior to installation. Components of the system are accessible for periodic inspection. A system air balance test and adjustment to design conditions is conducted in the course of the plant preoperational test program. Instruments are calibrated during testing. Automatic controls are tested for actuation at the proper setpoints. Alarm functions are checked for operability.

The system airflows are balanced in accordance with SMACNA HVAC Systems - Testing, Adjusting and Balancing (Reference 19).

9.4.6.5 Instrumentation Application

The containment recirculation cooling system is controlled by the plant control system. Process indication and alarm signals are locally accessible through the plant control system. Refer to Subsection 7.1.1 for a description of the plant control system.

Temperature controllers are provided in the ring headers of the corresponding containment recirculation fan coil unit which provide an input signal to modulate the central chilled water system supply valves to the cooling coils. The containment volumetric average high and low temperature are monitored and alarmed when the temperature is out of the normal operating range. The ambient temperature in a specific equipment compartment or areas of the containment are monitored and alarmed.

The discharge flowrate from each containment recirculation fan unit is monitored and low flow condition is alarmed to alert the operator for a manual start of the spare fan unit. Flow to the reactor cavity is also monitored and low flow condition is alarmed.

9.4.7 Containment Air Filtration System

The containment air filtration system (VFS) serves the containment, the fuel handling area and the other radiologically controlled areas of the auxiliary and annex buildings, except for the hot machine shop and health physics areas which are served by a separate ventilation system.

9.4.7.1 Design Basis

9.4.7.1.1 Safety Design Basis

The containment air filtration system provides the safety-related functions of containment isolation and containment vacuum relief. System equipment and ductwork whose failure could affect the operability of safety-related systems or components are designed to seismic Category II requirements. The remaining portion of the system is non-seismic. The containment isolation function is described in Subsection 6.2.3. The containment vacuum relief function automatically adjusts the internal containment pressure as it approaches the analyzed design parameters described in Subsection 6.2.1.1.4. This adjustment in the pressure across the containment shell preserves the structural integrity of the shell by maintaining the differential pressure within the allowable limits as defined by the structural analysis described in Subsection 3.8.2. The vacuum relief function is actuated on the Low-2 containment pressure signal and manually.

9.4.7.1.2 Power Generation Design Basis

Containment Area

The containment air filtration system provides the following functions:

- Provides intermittent flow of outdoor air to purge the containment atmosphere of airborne radioactivity during normal plant operation, and continuous flow during hot or cold plant shutdown conditions to provide an acceptable airborne radioactivity level prior to personnel access

- Provides intermittent venting of air into and out of the containment to maintain the containment pressure within its design pressure range during normal plant operation

- Directs the exhaust air from the containment atmosphere to the plant vent for monitoring, and provides filtration to limit the release of airborne radioactivity at the site boundary within acceptable levels

- Monitors gaseous, particulate and iodine concentration levels discharged to the environment through the plant vent

The system conditions and filters outside air supplied to the containment for compatibility with personnel access during maintenance and refueling operations. Based on the maximum and

minimum outside air normal temperature conditions shown in Chapter 2, Table 2.0-201, the system supplies air between 50 and 70°F. The air is distributed and conditioned within the containment by the containment recirculation system (Subsection 9.4.6).

Radiologically Controlled Areas Outside Containment

The containment air filtration system provides filtration of exhaust air from the fuel handling area, auxiliary, or annex buildings to maintain these areas at a slightly negative pressure with respect to the adjacent areas when the radiologically controlled area ventilation system detects high airborne radioactivity or high pressure differential. Refer to Subsection 9.4.3 for a description of the radiologically controlled area ventilation system.

9.4.7.2 System Description

The containment air filtration system is shown in Figure 9.4.7-1.

9.4.7.2.1 General Description

The containment air filtration system consists of two 100 percent capacity supply air handling units, a ducted supply and exhaust air system with containment isolation valves and piping, registers, exhaust fans, filtration units, automatic controls and accessories. The supply air handling units are located in the south air handling equipment room of the annex building at elevation 158′-0″. The supply air handling units are connected to a common air intake plenum, located at the south end of the fan room. The common air intake plenum #3 is located at the extreme south end of the annex building between elevation 158′-0″ and about 180′-0″. This plenum supplies air for the radiologically control area ventilation system, and the containment air filtration system. The intake is not protected from tornado missiles. The containment air filtration system supply air handling units discharge the supply air towards the east containment recirculation cooling system (VCS) recirculation unit to distribute the purge air within the containment. Refer to Subsection 9.4.6 for a description of the containment recirculation cooling system.

The exhaust air filtration units are located within the radiologically controlled area of the annex building at elevation 135′-3″ and 146′-3″. The filtration units are connected to a ducted system with isolation dampers to provide HEPA filtration and charcoal adsorption of exhaust air from the containment, fuel handling area, auxiliary and annex buildings. A gaseous radiation monitor is located downstream of the exhaust air filtration units in the common ductwork to provide an alarm if abnormal gaseous releases are detected. The plant vent exhaust flow is monitored for gaseous, particulate and iodine releases to the environment. During containment purge, the exhaust air filtration units satisfy 10 CFR 50 Appendix I guidelines (Reference 20) for offsite releases and meets 10 CFR 20 (Reference 21) allowable effluent concentration limits when combined with gaseous releases from other sources. During conditions of abnormal airborne radioactivity in the fuel handling area, auxiliary and/or annex buildings, the filtration units provide filtered exhaust to minimize unfiltered offsite releases.

The size of the containment air filtration system supply and exhaust air lines that penetrate the containment pressure boundary is 36 inches in diameter. Each penetration includes an inboard and outboard branch connection with 16 inch diameter containment isolation valves that are opened when the containment air filtration system is connected to the containment. The ends of the 36 inch containment penetrations are capped for possible future addition of a high volume purge system. In the event of a loss-of-coolant accident (LOCA) while the containment air filtration system is aligned to containment, there will not be a significant release of radioactivity during closure of the 16 inch diameter supply and exhaust valves. The maximum time for valve closure (see Table 6.2.3-1) is consistent with the analysis assumptions for radiological consequences (see Table 15.6.5-2). The closure time is also consistent with the basis (compliance with 10 CFR Part 50.34) for Branch

Technical Position CSB 6-4 to Standard Review Plan 6.2.4 (Reference 23) or described in Subsection 6.2.1.5.

The exhaust air containment penetration also includes a containment vessel vacuum relief function to protect the containment from reaching the containment shell design external design pressure. In the event of a LOCA, while these 6-inch motor-operated vacuum relief valves are open, the releases of radioactivity during the maximum time for closure of these valves (see Table 6.2.3-1) have been evaluated. The radiological consequences are bounded by those currently presented in Subsection 15.6.5.3. The maximum time for closure of the vacuum relief valves was also evaluated to determine the impact for the calculation of the LOCA minimum backpressure. The methodology depicted in Subsection 6.2.1.5 bounds the minimum backpressure calculation.

The exhaust air containment penetrations also serve as a connection for the containment integrated leak rate test system to pressurize and depressurize the containment during integrated leak rate testing. Otherwise, the containment air filtration exhaust subsystem is not involved with the containment integrated leak rate test and is isolated from the containment during this time period.

9.4.7.2.2 Component Description

The containment air filtration system is comprised of the following components. These components are located in buildings on the Seismic Category I Nuclear Island and the Seismic Category II portion of the annex building. The seismic design classification, safety classification and principal construction code for Class A, B, C, or D components are listed in Section 3.2. Table 9.4.7-1 provides design parameters for the major components of the system.

Supply Air Handling Units

Each supply air handling unit consists of a low efficiency filter bank, a high efficiency filter bank, a hot water heating coil bank, a chilled water cooling coil bank and a supply fan.

Exhaust Air Filtration Units

Each exhaust air filtration unit consists of an electric heater, an upstream high efficiency filter bank, a HEPA filter bank, a charcoal adsorber with a downstream postfilter bank, and an exhaust fan. The filtration unit configurations, including housing, internal components, ductwork, dampers, fans, and controls, are designed, constructed, and tested to meet the applicable performance requirements of ASME AG-1, N509, and N510 (References 36, 2, and 3) to satisfy the guidelines of Regulatory Guide 1.140 (Reference 30) except as noted in Appendix 1A. The filtration unit housings maximum leakage rates do not exceed one percent of the design flow in accordance with ASME AG-1. Refer to Table 9.4-1 for a summary of the containment air filtration system filtration efficiencies and Appendix 1A for a comparison of the containment air filtration system exhaust air filtration units with Regulatory Guide 1.140 (Reference 30).

Isolation Dampers

Isolation dampers are bubble tight, single-blade or parallel-blade type. The isolation dampers have spring return actuators which fail closed on loss of electrical power or instrument air. The design and construction of the isolation dampers is in accordance with ANSI/AMCA 500 or ASME AG-1 (References 14 and 36).

Pressure Differential Control Dampers

Pressure differential control dampers utilize opposed-blade type construction and meet the performance requirements of ANSI/AMCA 500 (Reference 14) or ASME AG-1 (Reference 36), Section DA. The dampers maintain a slight negative pressure within the fuel handling building area, with respect to the environment and adjacent non-radiologically controlled plant areas.

Supply and Exhaust Fans

The supply and exhaust air fans are centrifugal type, single width single inlet (SWSI), with high efficiency wheels and backward inclined blades to produce non-overloading horsepower characteristics. Fan performance is rated in accordance with ANSI/AMCA 210 (Reference 4), ANSI/AMCA 211 (Reference 5) and ANSI/AMCA 300 (Reference 6)

Containment Penetrations

The containment penetrations include containment isolation valves, interconnecting piping, and vent and test connections with manual test valves. The containment isolation components that maintain the integrity of the containment pressure boundary after a LOCA are classified as Safety Class B and seismic Category I. Seismic Category I debris screens are mounted on Safety Class C, seismic Category I pipe to prevent entrainment of debris through the supply and exhaust openings that may prevent tight valve shutoff. The screens are designed to withstand post-LOCA pressures.

The vent and purge line containment isolation valves inside and outside the containment have air operators. The valves are designed to fail closed in the event of loss of electrical power or air pressure. These valves are controlled by the protection and plant safety monitoring system as discussed in Subsection 7.1.1. The valves shut tight against the containment pressure following a design basis accident.

The motor-operated vacuum relief valves are controlled by the protection and plant safety monitoring system as discussed in Subsection 7.1.1. The valves inside containment are self-actuated check valves. These motor-operated valves and check valves shut tight against the containment pressure following a design basis accident.

Ductwork and Accessories

Ductwork, duct supports and accessories are constructed of galvanized steel. Ductwork subject to fan shutoff pressures is structurally designed to accommodate fan shutoff pressures. The system air ductwork inside containment meets seismic Category II criteria so that it will not fall and damage any safety-related equipment following a safe shutdown earthquake. Ductwork, supports and accessories meet the design and construction requirements of SMACNA Rectangular and Round Industrial Duct Construction Standards (References 16 and 34) and SMACNA HVAC Duct Construction Standard - Metal and Flexible (Reference 17). The exhaust air ductwork and supports meet the design and construction requirements of ASME AG-1 (Reference 36), Article SA-4500.

Shutoff and Balancing Dampers

Multiblade, two-position remotely operated shutoff dampers are parallel-blade type. Multiblade, balancing dampers are opposed-blade type. Air handling unit and fan shutoff dampers are designed for maximum fan static pressure at shutoff flow and meet the performance requirements of ANSI/AMCA 500 (Reference 14). The containment exhaust air dampers meet the design and construction criteria of ASME AG-1 (Reference 36), Section DA.

Fire Dampers

Fire dampers are provided where the ductwork penetrates a fire barrier to maintain the fire resistance rating of the fire barriers. The fire dampers meet the design and installation requirements of UL-555 (Reference 15).

Low Efficiency Filters, High Efficiency Filters, and Postfilters

Low and high efficiency filters are rated in accordance with ASHRAE Standard 52 and 126 (References 7 and 35). The minimum average dust spot efficiencies of the filters are shown in Table 9.4.7-1. High efficiency filter performance upstream of HEPA filter banks meet the design

requirements of ASME AG-1 (Reference 36), Section FB. Postfilters located downstream of the charcoal adsorbers have a minimum DOP efficiency of 95 percent. The filters meet UL 900 Class I construction criteria (Reference 8).

HEPA Filters

HEPA filters are constructed, qualified, and tested in accordance with ASME AG-1 (Reference 36), Section FC. Each HEPA filter cell is individually shop tested to verify an efficiency of at least 99.97 percent using a monodisperse 0.3-µm aerosol in accordance with ASME AG-1, Section TA.

Charcoal Adsorbers

Each charcoal adsorber is designed constructed, qualified, and tested in accordance with ASME AG-1 (Reference 36), Section FE; and Regulatory Guide 1.40. Each charcoal adsorber is a single assembly with welded construction and 4-inch deep Type III rechargeable adsorber cell, conforming with 1E Bulletin 80-03 (Reference 29).

Electric Heating Coils

The electric heating coils are fin tubular type. The electric heating coils meet the requirements of UL-1995 (Reference 10). The coils are constructed, qualified and tested in accordance with ASME AG-1 (Reference 36), Section CA.

Heating Coils

The heating coils are hot water, finned tubular type. The heating coils are provided with integral face and bypass dampers to prevent freeze damage when modulating the heat output. Coils are performance rated in accordance with ANSI/ARI 410 (Reference 12).

Cooling Coils

The chilled water cooling coils are counterflow, finned tubular type. The cooling coils are designed and rated in accordance with ASHRAE 33 (Reference 11) and ANSI/ARI 410 (Reference 12).

9.4.7.2.3 System Operation

Normal Plant Operation

During normal plant operation, the containment air filtration system operates on a periodic basis to purge the containment atmosphere as determined by the main control room operator to reduce airborne radioactivity or to maintain the containment pressure within its normal operating range. One supply air handling unit provides outdoor air that is filtered, cooled, or heated to the containment areas above the operating floor. The airflow rate is controlled to a constant value by modulating the supply fan inlet vanes to compensate for filter loading or changes in containment pressure. The cooling coils are supplied with chilled water from the central chilled water system (VWS) to cool and/or dehumidify the outside supply air. The heating coils are supplied with hot water by the hot water heating system (VYS). Refer to Subsections 9.2.7 and 9.2.10 for descriptions of the central chilled water and hot water heating systems.

The temperature of the air supplied by each air handling unit is controlled by temperature sensors located in the supply air duct. When the supply air temperature is low, the face and bypass dampers across the supply air heating coil are modulated to heat the supply air. When the supply air temperature is high, the flow of chilled water is modulated to cool the supply air. The supply air is continuously monitored by a smoke monitor located in the common ductwork downstream of the supply air handling units.

The airflow rate through the exhaust filters is controlled to a constant value when the exhaust filters are connected to the containment by modulating the exhaust fan inlet vanes to compensate for filter loading or changes in system resistance caused by single or parallel fan operation, or changes in containment pressure. The exhaust lines from the containment include a pair of isolation dampers arranged in parallel to restrict the airflow to maintain the exhaust filter plenums at a negative air pressure when the containment is positively pressurized. Based on predetermined setpoints, the operators select the appropriate damper to open. This prevents exfiltration of unfiltered air from bypassing the filters.

The filtered exhaust air from the containment is discharged to the atmosphere through the plant vent by the exhaust fan. The gaseous effluents in the plant vent are monitored for radioactivity levels before the air is discharged to the environment. Refer to Section 11.5 for a description of the plant vent radiation monitor.

During single subsystem operation, the standby supply and exhaust air units can be started manually by the operator if the operating train fails.

Prior to and during plant shutdown, one or both trains of the containment air filtration system can be operated to remove airborne radioactivity prior to personnel access. During cold ambient conditions, the supply air is heated by the hot water heating system. The exhaust filter unit electric heater controls the relative humidity of the exhaust air entering the charcoal adsorber below 70 percent.

When both trains are operated concurrently, the containment air filtration system provides a maximum airflow rate equivalent to approximately 0.21 air changes per hour.

Abnormal Plant Operation

The containment isolation valves in the supply and exhaust air lines automatically close when containment isolation signals are initiated by the protection and safety monitoring system or diverse actuation system. Refer to Subsections 6.2.3, 7.7 and 7.3 for discussions of the containment isolation system, diverse actuation system and protection and safety monitoring system.

Main control room operators can connect the containment air filtration system to the containment for cleanup of potential airborne radioactivity while the containment remains isolated if a containment high radiation signal is not present.

The containment vacuum relief valves automatically open when containment vacuum relief signals are initiated by the protection and safety monitoring system. These valves automatically close when containment isolation signals are initiated by the protection and safety monitoring system. Even though these valves are normally closed, they automatically receive a confirmatory close signal if the containment isolation valve inside the reactor containment building is open. As discussed in Subsection 7.6.2.4, this interlock verifies availability of engineered safety features for the containment vacuum relief and containment isolation functions.

If high airborne radioactivity or high pressure differential is detected in the fuel handling area, the auxiliary and/or annex buildings, the radiologically controlled area ventilation system isolates the affected area from the outside environment and starts the containment air filtration exhaust subsystem to maintain a slight negative pressure differential in the isolated zone(s). The airflow rate through the exhaust fan is maintained at a constant value by modulating the fan inlet vanes. An outside air makeup damper modulates to control the exhaust airflow rate through the HEPA and charcoal filters to maintain the isolated area(s) at a slightly negative pressure relative to the clean areas. The containment air filtration system is automatically isolated from the containment, if purging is in progress and the standby exhaust filter train does not start. If both exhaust trains are connected to the containment, one exhaust train is automatically isolated from the containment and realigned to

the isolated area(s). The exhaust subsystem can be manually connected to the onsite diesel generators if there is a loss of ac power.

The containment air filtration system is not required to mitigate the consequences of a design basis fuel handling accident or a loss of coolant accident. If the exhaust air filtration units are operational and ac power is available, they may be used to support post-event recovery operations. The plant vent high range radiation detectors monitor effluents discharged into the plant vent.

If smoke is detected in the common supply air duct, an alarm is initiated. The system remains in operation unless plant operators determine that there is a need to manually shut down the supply air handling units. Fire dampers are provided for HVAC ductwork that passes through a fire barrier in order to isolate each fire zone in the event of a fire.

9.4.7.3 Safety Evaluation

The containment air filtration system has the safety-related functions of containment isolation and vacuum relief. The containment isolation function is evaluated in Subsection 6.2.3. The vacuum relief system consists of redundant relief devices inside and outside containment. Two independent lines with an automatic isolation valve are provided on the positive pressure side of the system along with two independent lines with a check valve on the negative pressure side of the system penetrate containment. The lines share a common containment penetration. Therefore, there are no single active failures, which would prevent the system from performing its function.

The failure of equipment and ductwork will not reduce the functioning of safety-related systems, structures or components that are required to close to maintain containment isolation integrity after a design basis accident or those components required to function for vacuum relief. Ductwork that is located inside containment whose failure may affect any safety-related equipment is designed to seismic Category II requirements.

9.4.7.4 Tests and Inspections

The containment air filtration system is designed to permit periodic inspection of system components. Each component is inspected prior to installation. Components of each system are accessible for periodic inspection during normal plant operation. The exhaust subsystem is balanced to provide airflow in accordance with the guidelines of ASME N510 (Reference 3). The supply air subsystem airflow rate is measured and balanced in accordance with the guidelines of SMACNA HVAC Systems – Testing, Adjusting and Balancing (Reference 19). Instruments are calibrated during testing. Automatic controls are tested for actuation at the proper setpoints. Alarm functions are checked for operability.

The tests and inspections of the containment isolation valves associated with the containment air filtration system are discussed in Subsections 6.2.3 and 6.2.5.

HEPA filters and charcoal adsorbers are tested in place in accordance with ASME N510 to verify that these components do not exceed a maximum allowable bypass leakage. Samples of charcoal adsorbent are periodically tested to verify a minimum charcoal efficiency of 90 percent in accordance with Regulatory Guide 1.140 (Reference 30) except that test procedures and test frequency are conducted in accordance with ASME N510.

The exhaust ductwork and filter plenums are tested in place for leak tightness in accordance with ASME N510, Section 6.

The exhaust subsystem of the containment air filtration system (VFS) is tested and inspected in accordance with ASME/ANSI AG-1-1997 and Addenda AG-1a-2000 (Reference 201), ASME N509-1989, ASME N510-1989, and Regulatory Guide 1.140.

The VFS is tested as separate components and as an integrated system. Surveillance tests are performed to monitor the condition of the system. Testing methods include:

- Visual inspection
- Airflow capacity and distribution tests
- HEPA filter bank and adsorber bank in-place leak tests
- System bypass tests
- Air heater performance tests
- Laboratory testing of adsorbers
- Ductwork inleakage test

Testing is performed at the frequency provided in Table 1 of ASME N510-1989.

9.4.7.5 Instrumentation Application

The containment air filtration system operation is controlled by the plant control system (PLS) except for the containment isolation valves which are controlled by the protection and safety monitoring system (PMS) and diverse actuation system (DAS). Refer to Subsection 7.1.1 for a discussion of the plant control system, protection and safety monitoring system, and diverse actuation system. Automatic protection and safety monitoring system actuations of these valves are discussed in Section 7.3; the diverse actuation system signals are discussed in Subsection 7.7.1.11. Display and monitoring of system instrumentation is consistent with the requirements of Table 4-2 of ASME N509 (Reference 2).

Temperature controllers maintain the proper supply air temperature. Temperature indication and alarms are provided to inform operators of abnormal temperature conditions for supply air and charcoal adsorbers.

Pressure differential indication and alarms are provided to inform plant operators when air filter changeout is necessary.

Status indication and alarms are provided to monitor operation of fans, controlled dampers and controlled valves. Fans can be placed into operation or shut down from the main control room.

Relative humidity indication and an alarm are provided to monitor the relative humidity of the air upstream of the containment air filtration exhaust air charcoal adsorbers.

Radioactivity indication and alarms are provided to inform the main control room operators of the concentration of gaseous radioactivity in the containment air filtration system exhaust duct and gaseous, particulate and iodine concentrations in the plant vent. See Section 11.5 for a description of these radiation monitors.

Flow indication and alarms are provided to alert plant operators to equipment malfunctions.

9.4.8 Radwaste Building HVAC System

The radwaste building HVAC system serves the radwaste building which includes the clean electrical/mechanical equipment room and the potentially contaminated HVAC equipment room, the packaged waste storage room, the waste accumulation room, and the mobile systems facility.

9.4.8.1 Design Basis

9.4.8.1.1 Safety Design Basis

The radwaste building HVAC system serves no safety-related function and therefore has no nuclear safety design basis. The system is nonseismic.

9.4.8.1.2 Power Generation Design Basis

The radwaste building HVAC system provides the following functions:

- Provide conditioned air to work areas to maintain acceptable temperatures for equipment and personnel working in the areas
- Provide confidence that air movement is from clean to potentially contaminated areas to minimize the spread of airborne contaminants
- Collect the vented discharges from potentially contaminated equipment
- Provide for radiation monitoring of exhaust air prior to release to the environment
- Maintain the radwaste building at a negative pressure with respect to ambient to prevent unmonitored releases from the radwaste building

The system maintains the following temperature based on maximum and minimum normal outdoor air temperature conditions shown below in Chapter 2, Table 2.0-201:

Room or Area	Temperatures (°F)
Processing areas and storage areas	50-105
Mechanical and electrical equipment rooms	50-105
Truck staging area	50-105

9.4.8.2 System Description

The radwaste building HVAC system is shown in Figure 9.4.8-1.

9.4.8.2.1 General Description

The radwaste building HVAC system is a once-through ventilation system that consists of two integrated subsystems: the radwaste building supply air system and the radwaste building exhaust air system. The systems operate in conjunction with each other to maintain temperatures in the areas served while controlling air flow paths and building negative pressure.

The supply air system consists of two 50 percent capacity air handling units of about 9,000 scfm each with a ducted air distribution system, automatic controls, and accessories. The air handling units are located in an electrical/mechanical equipment room on elevation 100′-0″ on the southwest side of the

building. Each unit draws 100 percent outdoor air through individual louvered outdoor air intakes. The two units discharge into a common duct distribution system which is routed through the building. Branch connections from the main duct supply air through registers into the various areas served.

The exhaust air system consists of two 50 percent capacity exhaust centrifugal fans sized to allow the system to maintain a negative pressure, an exhaust air duct collection system, and automatic controls and accessories. The airflow rates are balanced to maintain a constant exhaust design air flow through the fans. The exhaust fans are located in an equipment room on Elevation 100′-0″ in the northwest corner of the radwaste building.

The exhaust fans discharge to a common duct which is routed to the plant vent. A radiation monitor records activity in the discharge duct and activates an alarm in the main control room when excess activity in the effluent discharge is detected. The radiation monitoring system is described in Section 11.5.

The exhaust air collection duct inside the radwaste building exhausts air from areas and rooms where low levels of airborne contamination may be present. Exhaust connection points are provided to allow the direct exhaust of equipment located on the mobile systems. Where potential for significant airborne release exists, mobile systems include HEPA filtration. Back draft dampers are provided at each mobile system connection to prevent blowback through the equipment in the event of exhaust system trip. Criteria for mobile processing systems are included in Sections 11.2 and 11.4.

9.4.8.2.2 Component Description

The radwaste building HVAC system is comprised of the following major components. These components are located in the non-seismic radwaste building.

Supply Air Handling Units

Each air handling unit consists of a plenum section, a low efficiency filter bank, a high efficiency filter bank, a hot water heating coil, a chilled water cooling coil bank, and a supply fan with automatic inlet vanes.

Supply and Exhaust Air Fans

The supply and exhaust fans are centrifugal type, single width single inlet (SWSI) or double width double inlet (DWDI), with high efficiency wheels and backward inclined blades to produce non-overloading horsepower characteristics. The fans are designed and rated in accordance with ANSI/AMCA 210 (Reference 4), ANSI/AMCA 211 (Reference 5), and ANSI/AMCA 300 (Reference 6).

Low Efficiency Filters and High Efficiency Filters

The low efficiency (25 percent) filters and high efficiency (80 percent) filters have a rated dust spot efficiency based on ASHRAE 52 and 126 (References 7 and 35). The filters meet UL 900 (Reference 8) Class I construction criteria.

Hot Water Unit Heaters

The hot water unit heaters consist of a fan section and hot water heating coil section factory assembled as a complete and integral unit. The unit heaters are either horizontal discharge or vertical downblast type. The coil ratings are in accordance with ANSI/ARI 410 (Reference 12).

Cooling Coils

The chilled water cooling coils are counterflow, finned tubular type. The cooling coils are designed and rated in accordance with ASHRAE 33 (Reference 11) and ANSI/ARI 410 (Reference 12).

Heating Coils

The hot water heating coils are counterflow, finned tubular type. The heating coils are provided with integral face and bypass dampers to prevent freeze damage when modulating the heat output. The heating coils are designed and rated in accordance with ASHRAE 33 (Reference 11) and ANSI/ARI 410 (Reference 12).

Shutoff, Control, Balancing, and Backdraft Dampers

Multiblade, two-position remotely operated shutoff dampers are parallel-blade type. Multiblade, control and balancing dampers are opposed-blade type. Backdraft dampers are provided to prevent backflow through exhaust connections for mobile systems. Air handling unit and fan shutoff dampers are designed for maximum fan static pressure at shutoff flow. Dampers meet the performance requirements of ANSI/AMCA 500 (Reference 14).

Fire Dampers

Fire dampers are provided at duct penetrations through fire barriers to maintain the fire resistance ratings of the barriers. The fire dampers meet the design and installation requirements of UL 555 (Reference 15).

Ductwork and Accessories

Ductwork, duct supports and accessories are constructed of galvanized steel. Ductwork subject to fan shutoff pressure is structurally designed for fan shutoff pressures. Ductwork, supports and accessories meet the design and construction requirements of SMACNA Rectangular and Round Industrial Duct Construction Standards (References 16 and 34) and SMACNA HVAC Duct Construction Standards - Metal and Flexible (Reference 17).

9.4.8.2.3 System Operation

Normal Plant Operation

During normal operation, both supply air handling units and both exhaust fans operate continuously to maintain suitable temperatures in the radwaste building. The radwaste building supply air flow through the inlet vanes of the supply fans is modulated automatically by the differential pressure controllers to maintain the building at a negative pressure relative to the outdoors. Sensors for the controllers are mounted in the general building area. Other sensors are mounted outdoors shielded from the effects of wind. Electric interlocks between the truck access doors and the supply fan flow controller permits the supply air to drop to 6000 cfm below the exhaust flow when any truck bay door is open. This creates a flow into the building through the open door.

The temperature of the air supplied by the air handling unit is controlled by separate heating and cooling controllers, with sensors in the general building area. The cooling controllers modulate the control valves in the chilled water supply lines to the air handling units. The heating controllers modulate the face and bypass dampers of the hot water heating coils in the air handling units.

Differential pressure drop across the supply units filter banks is monitored, and individual alarms are actuated when any pressure drop rises to a predetermined level indicative of the need for filter replacement. To replace the filters on a supply unit, the affected supply fan and exhaust fan are stopped and isolated from the duct system by means of isolation dampers. During filter replacement, the supply and exhaust systems operate at 50 percent capacity. In this mode of operation, radwaste processing operations are adjusted to obtain acceptable temperature in the radwaste building.

The hot water unit heaters in the mobile systems facility and truck staging area are not normally required to operate to maintain the general building temperature. These heaters operate, in response to local thermostat control, to temper air entering the building when a truck access door is opened.

The hot water unit heater in the electrical/mechanical room operates in response to local thermostat control to maintain the required minimum temperature.

Abnormal Plant Operation

The radwaste building HVAC system is not required to operate during any abnormal plant condition.

9.4.8.3 Safety Evaluation

The radwaste building HVAC system has no safety-related function and therefore requires no nuclear safety evaluation.

9.4.8.4 Tests and Inspections

The radwaste building HVAC system is designed to permit periodic inspection of system components. Each component is inspected prior to installation. Components of each system are accessible for periodic inspection during normal plant operation. A system air balance test and adjustment to design conditions is conducted in the course of the plant preoperational test program. Air flow rates are measured and balanced in accordance with the guidelines of SMACNA HVAC systems - Testing, Adjusting and Balancing (Reference 19). Instruments are calibrated during testing. Automatic controls are tested for actuation at the proper setpoints. Alarm functions are checked for operability.

9.4.8.5 Instrumentation Applications

The radwaste building HVAC system operation is controlled by the plant control system (PLS). Refer to Subsection 7.1.1 for a discussion of the plant control system.

Temperature controllers and thermostats maintain the proper space temperatures. Supply air temperature is controlled by sensing the temperature in the mobile systems facility and the electrical/ mechanical equipment room. Unit heaters are controlled by local thermostats. Temperature indication and alarms are accessible locally via the plant control system.

Temperature is indicated for each air handling unit supply air discharge duct.

Operational status of fans is indicated in the main control room. The fans and air handling units can be placed into operation or shutdown from the main control room.

Differential pressure indication is provided for each of the filters in the air handling units and an alarm for high pressure drop is provided for each air handling unit.

Airflow is indicated for the air handling unit and exhaust fan discharge ducts. Alarms are provided for low air flow rates in the fan discharge ducts.

An alarm is provided for high radiation in the main exhaust duct to the vent stack.

An alarm is provided for smoke in the common discharge duct from the supply air handling units.

Position indicating lights are provided for automatic dampers.

9.4.9 Turbine Building Ventilation System

The turbine building ventilation system (VTS) operates during startup, shutdown, and normal plant operations. The system maintains acceptable air temperatures in the turbine building for equipment operation and for personnel working in the building.

9.4.9.1 Design Basis

9.4.9.1.1 Safety Design Basis

The turbine building ventilation system serves no safety-related function and therefore has no nuclear safety design basis. The system is nonseismic.

9.4.9.1.2 Power Generation Design Basis

The turbine building ventilation system provides the following functions:

- Maintains acceptable temperatures for equipment operation
- Provides for removal of chemical fumes from the secondary sampling laboratory room, flammable vapors from the lube oil reservoir room and the clean and dirty lube oil storage room, and vitiated air from the toilets
- Provides conditioning air to maintain acceptable temperatures for electrical equipment rooms and personnel work areas
- Maintains the following temperatures based on the ambient outside air[1]:

– General area (operating deck, intermediate levels, and base slab)	50-105°F
– Fire pump room (motor driven)	50-105°F
– Electrical equipment rooms (switchgear room 1, switchgear room 2, and electrical equipment room)	50-105°F
– Personnel work areas (Secondary sampling laboratory, office space at elevation 149′-0″ and 174′-1 1/2″)	73-78°F
– South bay equipment areas (various pumps and RCP variable speed drive power converter units	50-100°F

9.4.9.2 System Description

The turbine building ventilation system consists of the following subsystems:

- General area heating, south bay equipment, and ventilation
- Electrical equipment and personnel work area HVAC
- Local area heating and ventilation
  - Lube oil reservoir room ventilation
  - Clean and dirty lube oil storage room ventilation
  - Motor-driven fire pump room heating and ventilation
  - Toilet area ventilation

The turbine building HVAC system general area subsystem is shown in Figure 9.4.9-1.

1. . Temperature conditions of 95°F DB/77°F WB (coincident), 79°F WB (non-coincident) in summer and -5°F in winter.

9.4.9.2.1 General Description

9.4.9.2.1.1 General Area Heating and Ventilation

Most of the turbine building is supplied by the general area ventilation and heating subsystem. Air is exhausted from the turbine building to the atmosphere by roof exhaust ventilators. The roof exhaust ventilators pull in outside air through wall louvers located at elevations 100′-0″, 117′-6″, and 135′-3″. Wall louvers are located at the operating deck to provide additional air during plant outage operations. The general area heating subsystem uses hot water unit heaters to provide local heating throughout the turbine building. During heating operation, the general area ventilation system is not operated.

9.4.9.2.1.2 Electrical Equipment and Personnel Work Area HVAC

The electrical equipment, south bay equipment, and personnel work area air conditioning subsystem serves electrical equipment areas (switchgear rooms and the electrical equipment room), the south bay equipment (CCS pumps, BDS pumps, and reactor coolant pumps variable frequency drive power converter areas), and personnel work areas (secondary sampling laboratory, office space at elevation 149′ and 174′). This subsystem is subdivided into three independent HVAC systems, one serving the electrical equipment areas, one serving the south bay equipment, and one serving the personnel work areas.

The electrical equipment HVAC system consists of two 50 percent capacity air handling units with a supply fan and a return air fan of about 16,500 scfm each, a ducted supply and return air system, automatic controls, and accessories. The air handling units are located on elevation 149′-0″ of the turbine building. The temperature of the rooms is maintained by thermostats which control the chilled water control valves for cooling and the integral face/bypass dampers for heating. Outside air is mixed with recirculated air to maintain a positive pressure.

The south bay equipment area HVAC system consists of two 50-percent capacity air handling units of about 7000 cfm capacity each. The air handling units are located on elevation 117′-6″ of the turbine building between column lines 11 and 11.2. The temperature of the room is maintained by thermostats that control the chilled water control valves for cooling and the integral face bypass dampers for heating. Outside air is mixed with the recirculation air to maintain a positive pressure.

The personnel work area HVAC system consists of two 50 percent capacity air handling units of about 4,500 scfm each, a ducted supply and return air system, automatic controls, and accessories. The air handling units are located on elevation 100′-0″ of the turbine building. The temperature of the rooms is maintained by thermostats which control the chilled water control valves for cooling and the integral face/bypass dampers for heating. Electric reheat coils are provided in the ductwork to each room to maintain close temperature control. Outside air is mixed with recirculated air to maintain a positive pressure.

9.4.9.2.1.3 Local Area Heating and Ventilation

The lube oil reservoir room, clean and dirty lube oil storage room, toilet areas (facilities), and secondary sampling laboratory fume hood have centrifugal exhaust fans to remove flammable vapors, odors, or chemical fumes as required.

The motor-driven fire pump room has an exhaust ventilator to remove heat generated by the fire pump. Air is pulled from the general area of the turbine building through wall fire damper openings in the room and is exhausted outside of the turbine building to the atmosphere. The motor-driven fire pump room is heated by a hot water unit heater to provide freeze protection for the fire pump.

9.4.9.2.2 Component Description

The turbine building ventilation system is comprised of the following major components. These components are located in the non-seismic turbine building.

HVAC Air Handling Units

Each air handling unit is a horizontal draw-through cabinet type consisting of a mixing box section, low efficiency (25 percent) filter, high efficiency (80 percent) filter, integral face/ bypass damper, hot water heating coil, chilled water cooling coil. The electrical equipment room air handling units include a return air fan and a supply fan. The personnel area and south bay equipment area air handling units include a supply air fan.

Low Efficiency Filters and High Efficiency Filters

The efficiency (25 percent) filters and high efficiency (80 percent) filters have a rated dust spot efficiency based on ASHRAE 52 and 126 (References 7 and 35). The filters meet UL 900 (Reference 8) Class I construction criteria.

Exhaust Ventilators

The turbine building roof exhaust ventilators are hooded, direct driven, propeller type with pneumatic operated backdraft damper. The ventilator in the fire pump room is a smaller, two-speed, propeller type with a pneumatically actuated backdraft damper. Ventilators in the lube oil rooms and restrooms are centrifugal type. The exhaust ventilators are built to the manufacturer's standards.

Shutoff, Control, Balancing, and Backdraft Dampers

Multiblade, two-position remotely operated shutoff dampers are parallel-blade type. Multiblade, control and balancing dampers are opposed-blade type. Backdraft dampers are provided to prevent backflow through shut down fans. Air handling unit and fan shutoff dampers are designed for maximum fan static pressure at shutoff flow. Dampers meet the performance requirements of ANSI/ AMCA 500 (Reference 14).

Unit Heaters

Unit heaters are the down-blow type with propeller type fans directly connected to the fan motor. Each unit heater is equipped with a four-way discharge outlet. The coil ratings are in accordance with ANSI/ARI 410 (Reference 12).

Electric Duct Heaters

Electric duct heaters are open grid type. The duct heaters are UL-listed for zero clearance and meet requirements of NFPA 70 (Reference 28).

Humidifiers

A humidifier is a packaged electric steam generator type which converts water to steam and distributes it through the air handling system. The humidifier is designed and rated in accordance with ARI 640 (Reference 13).

Fire Dampers

Fire dampers are provided at HVAC duct penetrations through fire barriers to maintain fire resistance ratings of the barriers. The fire dampers meet the design and installation requirements of UL-555 (Reference 15) as applicable.

Ductwork and Accessories

Ductwork, duct supports, and accessories are constructed of galvanized steel. Ductwork subject to fan shutoff pressure is structurally designed for fan shutoff pressures. Ductwork, supports and accessories meet the design and construction requirements of SMACNA Rectangular and Round Industrial Duct Construction Standards (References 16 and 34) and SMACNA HVAC Duct Construction Standards - Metal and Flexible (Reference 17).

9.4.9.3 System Operation

9.4.9.3.1 General Area Heating and Ventilation

The general area ventilation system is manually controlled. Roof exhaust ventilators are manually started and stopped as required to satisfy space temperature conditions. Wall louvers located at the ground floor and the two intermediate levels of the turbine building are normally open during ventilation operation. The wall louvers located at the operating floor are manually opened to increase ventilation air to the area during outage operations. The operating floor louvers normally remain closed during power operation.

Hot water unit heaters are controlled automatically or manually. In the automatic mode, the heater fan motors are thermostatically controlled by their respective space thermostats. The plant hot water heating system (VYS) supplies hot water to the unit heaters.

9.4.9.3.2 Electrical Equipment, South Bay Equipment, and Personnel Work Area HVAC

During normal operation, the four air handling units of the electrical equipment and south bay equipment area HVAC systems operate continuously and the two air handling units of the personnel work area HVAC system operate continuously. The chilled water coils are supplied from the plant central chilled water system (VWS) and the hot water coils are supplied from the plant central hot water heating system.

9.4.9.3.3 Local Area Heating and Ventilation

The ventilation operation for the lube oil reservoir room and the clean and dirty lube oil storage room is similar. Each centrifugal exhaust fan runs continuously to prevent the accumulation of chemical fumes or flammable vapors in its respective room.

The ventilation operation for the motor-driven fire pump room is a directly driven, two-speed wall exhaust ventilator that is automatically or manually controlled. In the automatic mode, the exhaust ventilator motor is thermostatically controlled by a two-stage room thermostat. In the manual mode the exhaust ventilator runs continuously at high speed until it is manually stopped.

To provide heating of the motor driven fire pump room, a hot water unit heater fan motor is controlled by a space thermostat in the automatic mode, or the heater fans run continuously in the manual mode. The plant hot water heating system supplies hot water to the unit heater.

The toilet area exhaust fans run continuously.

9.4.9.4 Safety Evaluation

The turbine building ventilation system has no safety-related function and therefore requires no nuclear safety evaluation.

There is no safety-related equipment in the turbine building.

9.4.9.5 Tests and Inspections

The turbine building ventilation system is designed to permit periodic inspection of system components during normal plant operation. System air balance testing and adjustments for the electrical equipment and personnel work areas are conducted in accordance with SMACNA (Reference 19).

Fans are factory tested and rated in accordance with ANSI/AMCA 210 (Reference 4). Water coils are factory tested and rated in accordance with ANSI/ARI 410 (Reference 12).

Ductwork is leak tested in accordance with SMACNA (Reference 18).

9.4.9.6 Instrumentation Applications

The turbine building ventilation system is controlled by the plant control system.

Temperature indication and controllers control the room air temperatures within a predetermined range.

Temperature indication is provided to allow surveillance of room and space temperatures in the turbine building.

Differential pressure indication is provided for the air filters in each air handling unit. Alarms are provided for high pressure drops across the air filters.

9.4.10 Diesel Generator Building Heating and Ventilation System

The diesel generator building heating and ventilation system serves the standby diesel generator rooms, electrical equipment service modules, and diesel fuel oil day tank vaults in the diesel generator building and the two diesel oil transfer modules located in the yard near the fuel oil storage tanks. Local area heating and ventilation equipment is used to condition the air to the stairwell and security room.

9.4.10.1 Design Basis

9.4.10.1.1 Safety Design Basis

The diesel generator building heating and ventilation system serves no safety-related function and therefore has no nuclear safety design basis. The system is nonseismic.

9.4.10.1.2 Power Generation Design Basis

The diesel generator building heating and ventilation system provides the following functions:

- Provides sufficient quantities of ventilation air to maintain acceptable temperatures within the generator rooms for equipment operation and reliability during periods of diesel generator operation in order for the onsite standby power system to perform its defense in depth functions

- Provides adequate heating and ventilation for suitable environmental conditions for maintenance personnel working in the diesel generator room when the generators are not in operation

- Provides suitable environmental conditions for equipment operation in each diesel generator electrical equipment service module under the various modes of diesel generator operation
- Prevents the accumulation of combustible vapors and dissipate their concentration in the fuel oil day tank vault
- Provides adequate heating and ventilation to maintain acceptable temperature within the diesel oil transfer module enclosures

The system maintains the following room temperatures based on ambient outside air temperature conditions of 95°F (summer) and -5°F (winter):

Area	Design Minimum (°F)	Temperature Maximum (°F)
Diesel Generator Area		
Diesel Generator On	None	130
Diesel Generator Off	50	105
Service Module		
Diesel Generator On	50	105
Diesel Generator Off	50	105
Diesel Oil Transfer Module Enclosure	50	105
Stairwell	50	95
Security Room	73	78

9.4.10.2 System Description

The diesel generator building heating and ventilation system is shown in Figure 9.4.10-1.

The system consists of the following subsystems:

- Normal heating and ventilation subsystem
- Standby exhaust ventilation subsystem
- Fuel oil day tank vault exhaust subsystem
- Diesel oil transfer module enclosures ventilation and heating subsystem

9.4.10.2.1 General Description

9.4.10.2.1.1 Normal Heating and Ventilation System

The normal heating and ventilation subsystem serves the diesel generator building. Each diesel generator train is provided with independent ventilation and heating equipment for the building areas serving that diesel generator train.

Each normal heating and ventilation subsystem for a diesel generator train consists of one 100 percent capacity engine room air handling unit which ventilates the diesel generator room, one 100 percent capacity service module air handling unit which ventilates the electrical equipment service module, an exhaust system for the fuel oil storage vault and electric unit heaters in the diesel generator area. Air intake louvers for these units are located as high in the diesel generator building wall as possible.

The engine room air handling units are located above the electrical equipment service module with supply and return ducts in the diesel generator room.

The service module air handling units are located above the service module with supply and return ducts into the module.

Electric unit heaters are provided in the diesel generator room to maintain the space at a minimum temperature of 50°F when the diesel generators are off.

Electric unit heaters are provided in the diesel generator stairwell and security room to maintain the space at a minimum temperature.

9.4.10.2.1.2 Standby Exhaust Ventilation Subsystem

The standby exhaust ventilation subsystem for each diesel generator room consists of two 50 percent capacity roof mounted exhaust fans and motor operated air intake dampers mounted in the exterior walls of the room.

9.4.10.2.1.3 Fuel Oil Day Tank Vault Exhaust Subsystem

Each fuel oil day tank vault is continuously ventilated by a centrifugal exhaust fan. The exhaust fans are mounted on the roof of the vault and ducted to draw air from one foot above the vault floor and from above the oil containment dike to remove any oil fumes generated in the space. Air is drawn into the vault from the diesel generator room through an opening protected with a fire damper.

9.4.10.2.1.4 Diesel Oil Transfer Module Enclosures Ventilation and Heating Subsystem

Each diesel oil transfer module enclosure is ventilated by a roof mounted exhaust fan. Outside air is drawn into the enclosure through manually operated louvered air intakes. The louvers are closed for winter operation when heating is required. An electric unit heater is provided in each enclosure to maintain the space at a minimum temperature of 50°F.

9.4.10.2.2 Component Description

The diesel generator building heating and ventilation system is comprised of the following major components. These components are located in the non-seismic diesel-generator building. The seismic design classification, safety classification and principal construction code for Class A, B, C, or D components are listed in Section 3.2. Tables 9.4.10-1 through 9.4.10-4 provide design parameters for major components in the system.

Supply Air Handling Units

Each air handling unit consists of a mixing box section, a low efficiency filter bank, a high efficiency filter bank, and a supply fan. Electric heating coils are provided for the service module air handling units for module heating.

Supply and Exhaust Air Fans

The supply and exhaust fans are centrifugal type, single width single inlet (SWSI) or double width double inlet (DWDI), with high efficiency wheels and backward inclined blades to produce non-overloading horsepower characteristics. The fans are designed and rated in accordance with ANSI/AMCA 210 (Reference 4), ANSI/AMCA 211 (Reference 5), and ANSI/AMCA 300 (Reference 6).

Low Efficiency Filters and High Efficiency Filters

The low efficiency filters and high efficiency filters have a rated dust spot efficiency based on ASHRAE 52 and 126 (References 7 and 35). Filter minimum average dust spot efficiency is shown in Table 9.4.10-1. The filters meet UL 900 (Reference 8) Class I construction criteria.

Electric Heating Coils

The electric heating coils are multi-stage fin tabular type. The electric heating coils meet the requirements of UL 1995 (Reference 10).

Roof Exhaust Fans

The standby exhaust fans are roof mounted, direct drive upblast ventilators. The fans are equipped with gravity dampers that open when the fan operates and close when the fan is shut down. The diesel oil transfer module enclosure exhaust fans are direct driven centrifugal fan roof ventilators. The ventilators are equipped with gravity dampers that open when the fan operates and close when the fan is shut down.

Electric Unit Heaters

The electric unit heaters are single-stage or two-stage fin tubular type. The electric unit heaters are UL-listed and meet the requirements of UL 1996 (Reference 26) and the National Electric Code (Reference 28).

Shutoff, Control, Balancing, and Backdraft Dampers

Multiblade, two-position shutoff remotely operated dampers are parallel-blade type. Multiblade, control and balancing dampers are opposed-blade type. Backdraft dampers are provided to prevent backflow through shut down exhaust fans and to relieve pressure from the service module and diesel generator building. Dampers meet the performance requirements of ANSI/AMCA 500 (Reference 14).

Fire Dampers

Fire dampers are provided at duct penetrations through fire barriers to maintain the fire resistance ratings of the barriers. The fire dampers meet the design and installation requirements of UL 555 (Reference 15).

Ductwork and Accessories

Ductwork, duct supports and accessories are constructed of galvanized steel. Ductwork subject to fan shutoff pressure is structurally designed for fan shutoff pressures. Ductwork, supports and accessories meet the design and construction requirements of SMACNA Rectangular and Round Industrial Duct Construction Standards (References 16 and 34) and SMACNA HVAC Duct Construction Standards - Metal and Flexible (Reference 17).

9.4.10.2.3 System Operation

9.4.10.2.3.1 Normal Heating and Ventilation Subsystem

Normal Plant Operation

During normal plant operation, each engine room air handling unit operates continuously when the diesel generator is not operating and outdoor air is required for room cooling. Each air handling unit has 100 percent cooling capacity for the engine room served by the unit. The engine room air handling unit is not required to operate when the diesel generator in the engine room served operates. The unit draws outdoor air through a louvered air intake and mixes it with return air from the

engine room in required proportion to satisfy a thermostat located in the space served. Excess outside air supplied to the engine room is discharged to outdoors via a gravity relief damper.

Each service module air handling unit operates continuously, providing 100 percent cooling and heating capacity for the service module served by the unit. The unit draws outside air through a louvered air intake and mixes it with return air from the service module in required proportion to satisfy a space thermostat located in the service module. Excess outside air supplied to the service module flows into the diesel engine area via a wall mounted relief damper. The electric heating coil in the service module air handling unit is controlled by a separate space thermostat. The service module air handling unit operates continuously regardless of diesel generator status.

The engine room electric unit heaters operate as required to maintain the minimum room temperature when the diesel generators are not operating. No specific minimum room temperature is maintained when the diesel generators operate. Local space thermostats turn the unit heaters on and off as required for temperature control.

The stairwell and security room electric unit heaters operate as required to maintain the minimum room temperature. Local space thermostats turn the unit heaters on and off as required for temperature control.

Abnormal Plant Operation

The engine room air handling units and unit heaters are not required to operate during any abnormal plant condition. This equipment is not required to operate when the diesel generators operate.

The service module air handling units operate continuously during normal plant operation or when the diesel generators operate during a loss of the plant ac electrical system.

9.4.10.2.3.2 Standby Exhaust Ventilation Subsystem

Normal Plant Operation

During normal plant operation, the standby exhaust fans operate in conjunction with the diesel generators. Each exhaust fan has 50 percent cooling capacity for the engine room served by the fan. The fans for an engine room start when the diesel generator in that room is started. The fans shut down when the diesel generator is stopped and the engine room temperature satisfies the standby exhaust fan temperature controllers. One or both standby exhaust fans are required to operate to maintain the engine room temperature depending on the outdoor ambient temperature.

The motor operated air intake dampers automatically open when the fans start and close when both fans shut down.

The standby exhaust ventilation system is not required to operate when the diesel generators are not operating.

Abnormal Plant Operation

The standby exhaust ventilation system is required to operate to support diesel generator operation during loss of offsite power. System operation is identical to that for normal plant operation.

9.4.10.2.3.3 Fuel Oil Day Tank Vault Exhaust Subsystem

Normal Plant Operation

During normal plant operation, each fuel oil day tank vault exhaust fan operates continuously. The fans are manually started and shut down. Each exhaust fan has 100 percent capacity for ventilation of the day tank vault served by the fan.

Abnormal Plant Operation

The fuel oil day tank vault exhaust subsystem is not required to operate during any abnormal plant condition.

9.4.10.2.3.4 Diesel Oil Transfer Module Enclosures Ventilation and Heating Subsystem

Normal Plant Operation

During normal plant operation, each diesel oil transfer module enclosure exhaust fan operates during warm outdoor ambient conditions under control of a temperature controller to maintain the enclosure below the maximum indoor design temperature. The unit heaters operate as required during the winter to maintain the minimum design enclosure temperature. The operable outside air intake louvers are manually opened for the cooling season and manually set closed during the winter heating season.

Abnormal Plant Operation

The diesel oil transfer module enclosure ventilation and heating subsystem is required to operate to support diesel generator operation during loss of the plant ac electrical system. System operation is identical to that for normal plant operation.

9.4.10.3 Safety Evaluation

The diesel generator building heating and ventilation system has no safety-related function and therefore requires no nuclear safety evaluation.

9.4.10.4 Tests and Inspection

The diesel generator building heating and ventilation system is designed to permit periodic inspection of system components. Each component is inspected prior to installation. Components of each system are accessible for periodic inspection during normal plant operation. A system air balance test and adjustment to design conditions is conducted in the course of the plant preoperational test program. Air flow rates are measured and balanced in accordance with the guidelines of SMACNA HVAC Systems - Testing, Adjusting, and Balancing (Reference 19). Instruments are calibrated during testing. Automatic controls are tested for actuation at the proper setpoints. Alarm functions are checked for operability.

9.4.10.5 Instrumentation Applications

The diesel generator building heating and ventilation system operation is controlled by the plant control system. Refer to Subsection 7.1.1 for a discussion of the plant control system.

Temperature controllers and thermostats maintain the proper space temperatures. Temperature indication and alarms are accessible locally via the plant control system.

Operational status of fans is indicated in the main control room. All fans and air handling units can be placed into operation or shutdown from the main control room or locally.

Differential pressure indication is provided for each of the filters in the air handling units and an alarm for high pressure drop is provided for each air handling unit.

9.4.11 Health Physics and Hot Machine Shop HVAC System

The health physics and hot machine shop HVAC system serves the annex building stairwell, S02; the personnel decontamination area, frisking and monitoring facilities, containment access corridor, and health physics facilities on the 100′-0″ elevation of the annex building and the hot machine shop on the 107′-2″ elevation of the annex building.

9.4.11.1 Design Basis

9.4.11.1.1 Safety Design Basis

The health physics and hot machine shop HVAC system serves no safety-related function and therefore has no nuclear safety design basis. The system is nonseismic.

9.4.11.1.2 Power Generation Design Basis

The health physics and hot machine shop HVAC system provides the following functions:

- Provides conditioned air to work areas to maintain acceptable temperatures for equipment and personnel working in the areas
- Provides air movement from clean to potentially contaminated areas to minimize the spread of airborne contaminants
- Collects the vented discharges from potentially contaminated equipment in the area
- Provides for exhaust from welding booths, grinders and other miscellaneous equipment located in the hot machine shop
- Provides for radiation monitoring of exhaust air prior to release to the environment
- Maintains the access control area and hot machine shop at a slight negative pressure with respect to outdoors and the clean areas of the annex building to prevent unmonitored releases of radioactive contaminants
- Provides humidification to maintain a minimum of 35 percent relative humidity

The system maintains the following temperatures based on maximum and minimum normal outside air temperature conditions shown in Chapter 2, Table 2.0-201:

Room or Area	Temperatures (°F)
Health physics area	73-78
Hot machine shop	65-85
Security room	73-78
Elevator machine room and stairwell	65-95

9.4.11.2 System Description

The health physics and hot machine shop HVAC system is shown in Figure 9.4.11-1.

9.4.11.2.1 General Description

The health physics and hot machine shop HVAC system is a once-through ventilation system consisting of two integrated subsystems: a supply air system and an exhaust air system. The systems operate in conjunction with each other to satisfy the functional requirements of maintaining temperatures in the areas served while controlling air flow paths and area negative pressure.

The supply air system consists of two 100 percent capacity air handling units of about 14,000 scfm each with a ducted air distribution system and automatic controls. The air handling units are located in the lower south air handling equipment room on elevation 135′-3″ of the annex building. Heating coils are supplied with water from the hot water heating system and cooling coils are supplied from the central chilled water system. The units draw 100 percent outdoor air through the common, louvered outdoor air intake plenum #2 as described in Subsection 9.4.2. They discharge into a duct distribution system which is routed to the health physics and machine shop areas. Humidification is controlled to maintain a minimum 35 percent relative humidity via a steam humidifier located in the main system supply duct and supplied with water from the demineralized water system.

The exhaust air system consists of two 100 percent capacity exhaust centrifugal fans sized to allow the system to maintain a negative pressure with ductwork and automatic controls, and a separate machine shop exhaust fan and high efficiency filter for exhausting from machine tools and other localized areas in the hot machine shop. The exhaust fans are located in the staging and storage area on elevation 135′-3″ of the annex building. The machine shop exhaust fan and filter are located locally in the machine shop. The air flow rates are balanced to maintain a constant exhaust design air flow through the fans.

The exhaust fans discharge to a common duct which is routed to the plant vent stack. A radiation monitor measures activity in the common discharge duct downstream of the exhaust fans and activates an alarm in the main control room when excess activity in the effluent discharge is detected. The radiation monitoring system is described in Section 11.5.

Individual flexible exhaust duct branches are provided to machine tools. The flexible ducts are connected to a hard duct manifold which is connected to a filter and exhaust fan. The exhaust fan discharges into the main system exhaust ductwork.

Electric unit heaters are provided in the security, stairwell, and elevator machine rooms to maintain the space at a minimum temperature.

9.4.11.2.2 Component Description

The health physics and hot machine shop HVAC system is comprised of the following major components. These components are located in the Seismic Category II portion of the annex building.

Supply Air Handling Units

Each air handling unit consists of a low efficiency filter bank, a high efficiency filter bank, a hot water heating coil, a chilled water cooling coil bank, and a supply fan with automatic inlet vanes.

Supply and Exhaust Air Fans

The supply and exhaust fans are centrifugal type, single width single inlet (SWSI) or double width double inlet (DWDI), with high efficiency wheels and backward inclined blades to produce

non-overloading horsepower characteristics. The fans are designed and rated in accordance with ANSI/AMCA 210 (Reference 4), ANSI/AMCA 211 (Reference 5), and ANSI/AMCA 300 (Reference 6).

Low Efficiency Filters and High Efficiency Filters

The low efficiency (25 percent) filters and high efficiency (80 percent) filters have a rated dust spot efficiency based on ASHRAE 52 and 126 (References 7 and 35). The filters meet UL 900 (Reference 8) Class I construction criteria.

Cooling Coils

The chilled water cooling coils are counterflow, finned tubular type. The cooling coils are designed and rated in accordance with ASHRAE 33 (Reference 11) and ANSI/ARI 410 (Reference 12).

Heating Coils

The hot water heating coils are counterflow, finned tubular type. The heating coils are provided with integral face and bypass dampers to prevent freeze damage when modulating heat output. The heating coils are designed and rated in accordance with ASHRAE 33 (Reference 11) and ANSI/ARI 410 (Reference 12).

Humidifier

The humidifier is a packaged electric steam generator type which converts water to steam and distributes it through the air handling system. The humidifier is designed and rated in accordance with ARI 640 (Reference 13).

Shutoff, Control, Balancing, and Backdraft Dampers

Multiblade, two-position remotely operated shutoff dampers are parallel-blade type. Multiblade, control and balancing dampers are opposed-blade type. Backdraft dampers are provided to prevent backflow through ductwork when operating the machine tools exhaust fan. Air handling unit and fan shutoff dampers are designed for maximum fan static pressure at shutoff flow. Dampers meet the performance requirements of ANSI/AMCA 500 (Reference 14).

Fire Dampers

Fire dampers are provided at duct penetrations through fire barriers to maintain the fire resistance ratings of the barriers. The fire dampers meet the design and installation requirements of UL 555 (Reference 15).

Ductwork and Accessories

Ductwork, duct supports and accessories are constructed of galvanized steel. Ductwork subject to fan shutoff pressure is structurally designed for fan shutoff pressures. Ductwork, supports and accessories meet the design and construction requirements of SMACNA Rectangular and Round Industrial Duct Construction Standards (References 16 and 34) and SMACNA HVAC Duct Construction Standards – Metal and Flexible (Reference 17).

9.4.11.2.3 System Operation

Normal Plant Operation

During normal operation, one supply air handling unit and one exhaust fan operate continuously to maintain suitable temperatures in the health physics and hot machine shop areas of the annex building. The supply air flow is automatically modulated to maintain a negative pressure in the areas served with respect to the outdoors and to surrounding areas which do not have their exhausts

monitored for radioactivity. Differential pressure controllers, with sensors in the general health physics area and sensors mounted outdoors (shielded from wind effects), modulate the automatic inlet vanes of the supply fan to maintain area negative pressure. In addition, a separate differential pressure controller with a sensor in the hot machine shop modulates a damper in the supply air duct to the hot machine shop to maintain a negative pressure in the shop with respect to outdoors and to surrounding areas which do not have their exhausts monitored for radioactivity.

The temperature in the health physics and the hot machine shop area is maintained within the design range by a temperature sensor located in the health physics area, with which a controller modulates the control valve on the chilled water supply lines to the cooling coil and the face and bypass damper of the heating coil.

Abnormal Plant Operation

The health physics and hot machine shop HVAC system is not required to operate during any abnormal plant condition.

9.4.11.3 Safety Evaluation

The health physics and hot machine shop HVAC system has no safety-related functions and therefore requires no nuclear safety evaluation.

9.4.11.4 Tests and Inspections

The health physics and hot machine shop HVAC system is designed to permit periodic inspection of system components. Each component is inspected prior to installation. Components of each system are accessible for periodic inspection during normal plant operation. A system air balance test and adjustment to design conditions is conducted during the plant preoperational test program. Air flow rates are measured and balanced in accordance with the guidelines of SMACNA HVAC Systems - Testing, Adjusting and Balancing (Reference 19). Instruments are calibrated during testing. Automatic controls are tested for actuation at the proper setpoints. Alarm functions are checked for operability.

9.4.11.5 Instrumentation Application

The health physics and hot machine shop HVAC system operation is controlled by the plant control system. Refer to Subsection 7.1.1 for a discussion of the plant control system.

Temperature controllers maintain the proper space temperature. Supply air temperature is controlled by sensing the temperature in the general health physics area.

Temperature is indicated for each air handling unit supply air discharge duct.

Operational status of fans is indicated in the main control room. The fans and air handling units can be placed into operation or shutdown from the main control room.

Differential pressure indication is provided for each of the filters in the air handling units and an alarm for high pressure drop is provided for each air handling unit.

Airflow is indicated for the air handling unit and exhaust fan discharge ducts. Alarms are provided for low air flow rates in the fan discharge ducts.

An alarm is provided for high radiation in the main exhaust duct to the vent stack.

An alarm is provided for smoke in the common discharge duct from the supply air handling units.

Position indicating lights are provided for automatic dampers.

9.4.12 Combined License Information

The program to maintain compliance with ASME AG-1 (Reference 36), ASME N509 (Reference 2), ASME N510 (Reference 3) and Regulatory Guide 1.140 (Reference 30) for portions of the nuclear island nonradioactive ventilation system and the containment air filtration system identified in Subsections 9.4.1 and 9.4.7 are addressed in Subsections 9.4.1.4 and 9.4.7.4, respectively. The MCR/CSA HVAC subsystem's recirculation mode during toxic emergencies, and conformance with Regulatory Guide 1.78 (Reference 37) is addressed in Section 6.4.

Section 6.4 does not identify any toxic emergencies that require the main control room/control support area HVAC to enter recirculation mode.

9.4.13 References

1. "Functional Criteria For Emergency Response Facilities," USNRC NUREG 0696.
2. "Nuclear Power Plant Air-Cleaning Units and Components," ASME N509-1989 (R1996).
3. "Testing of Nuclear Air-Cleaning Systems," ASME N510-1989.
4. "Laboratory Method of Testing Fans for Rating Purposes," ANSI/AMCA 210-85.
5. "Certified Ratings Program Air Performance," ANSI/AMCA 211-87.
6. "Reverberant Room Method of Testing Fans For Rating Purposes," ANSI/AMCA 300-85.
7. Gravimetric and Dust Spot Procedures for Testing Air-Cleaning Devices Used in General Ventilation for Removing Particulate Matter, ASHRAE 52.1, 1992.
8. "Test Performance of Air-Filter Units," UL-900, 1994.
9. "High-Efficiency, Particular, Air-Filter Units," UL-586, 1996.
10. "Heating and Cooling Equipment," UL 1995, 1995.
11. "Methods of Testing for Rating Forced Circulation Air Cooling and Air Heating Coils," ASHRAE 33-78.
12. "Forced-Circulation Air Cooling and Air Heating Coils," ANSI/ARI 410-91.
13. "Commercial and Industrial Humidifiers," ARI 640-96.
14. "Testing Methods for Louvers, Dampers, and Shutters," ANSI/AMCA 500-89.
15. "Fire Dampers," UL-555, 1999.
16. "Rectangular Industrial Duct Construction Standards," SMACNA, 1980.
17. "HVAC Duct Construction Standards – Metal and Flexible," SMACNA, 1995.
18. "HVAC Duct Leakage Test Manual," SMACNA, 1985.
19. "HVAC Systems – Testing, Adjusting, and Balancing," SMACNA, 1993.
20. Code of Federal Regulations, Title 10, Part 50, Appendix I.
21. Code of Federal Regulations, Title 10, Part 20.
22. "Heat-Stress Management Program for Nuclear Power Plants," EPRI NP-4453 by Westinghouse Electric Corporation, dated February 1986.

23. Branch Technical Position CSB 6-4 to "Containment Isolation System," Standard Review Plan 6.2.4 of NUREG-0800 Rev. 2, July 1981.

24. "Military Specification Filter, Particulate, High-Efficiency, Fire Resistant," MIL-F-51068F.

25. "Leakage Rated Dampers for Use in Smoke Control System," UL-555S, 1999.

26. "Electric Duct Heaters," UL-1996, 1996.

27. "Standard for Installation of Air Conditioning and Ventilation Systems," NFPA 90A, 1999.

28. "National Electrical Code," NFPA 70, 1999.

29. "Loss of Charcoal from Adsorber Cells," IE Bulletin 80-03, 1980.

30. "Design, Inspection, and Testing Criteria for Air Filtration and Adsorption Units of Normal Atmospheric Cleanup Systems in Light-Water-Cooled Nuclear Power Plants," Regulatory Guide (RG) 1.140-2001, Revision 2.

31. "Installation Design and Installation of Large Lead Storage Batteries for Nuclear Power Plants," Regulatory Guide 1.128, Revision 1, October 1978.

32. "Ventilation for Acceptable Indoor Air Quality," ASHRAE Standard 62-1999.

33. NFPA 92A-2000, "Recommended Practice for Smoke Control Systems."

34. "Round Industrial Duct Construction Standards," SMACNA, 1999.

35. "Method of Testing HVAC Air Ducts," ASHRAE 126, 2000.

36. "Code on Nuclear Air and Gas Treatment," ASME/ANSI AG-1-1997.

37. "Evaluating the Habitability of a Nuclear Power Plant Control Room During a Postulated Hazardous Chemical Release," USNRC Regulatory Guide 1.78, Revision 1, December 2001.

38. "Standard Test Methods for Determining Air Change in a Single Zone by Means of a Tracer Gas Dilution," ASTM E741, 2000.

39. "Electric Heaters for Use in Hazardous (Classified) Locations," UL 823.

40. "Movable and Wall or Ceiling Hung Electrical Room Heaters," UL 1278.

41. "Electrical Baseboard Heating Equipment," UL 1042.

201. ASME/ANSI AG-1a-2000, Addenda to ASME AG-1-1997 Code on Nuclear Air and Gas Treatment, Section HA, “Housings.”

Table 9.4-1
Design Filtration Efficiencies and Nominal Airflow Rates for HVAC Systems(1)

Areas Served(1)	Design/Test Standard	Ventilation Airflow (cfm)	Recirculation Flow (cfm)	Humidity Control	HEPA Efficiency	Charcoal Efficiency(3)	Maximum Inleakage (cfm)
MCR/CSA (Supplemental Air)	RG 1.140	860	3,140	Yes	99%	90%	25(4)
Containment	RG 1.140	4,000(2)	N/A	Yes	99%	90%	N/A

Notes:
1. Ventilation cfm is shown for each train unless otherwise noted.
2. Both trains of the containment purge may be operated at the same time prior to and during cold shutdown.
3. Charcoal filters are 4-inch deep Type III adsorber cell.
4. This VBS inleakage represents the total inleakage into the combined MCR/CSA HVAC volume.

Table 9.4.1-1 (Sheet 1 of 2)
Component Data – Nuclear Island
Nonradioactive Ventilation System
MCR/CSA HVAC Subsystem
(Nominal Values)

Supply Air Handling Units	
Quantity	2
System capacity per unit (%)	100
Supply Fan Requirements	
Type	Centrifugal
Design airflow (scfm)	22,000
Fan static pressure (in. wg)	9.75
Return Air/Smoke Purge Fan Requirements	
Type	Centrifugal
Design airflow (scfm)	20,500
Fan static pressure (in. wg)	6
Cooling Coil Requirements	
Type	Chilled Water
Capacity (Btu/hr)	960,000
Water flow (gpm)	See Table 9.2.7-1
Heating Coil Requirements	
Type	Electric
Capacity (kw)	170
Filter Requirements	
Low efficiency filter, minimum ASHRAE efficiency (%)	25
High efficiency filter, minimum ASHRAE efficiency (%)	80

Table 9.4.1-1 (Sheet 2 of 2)
Component Data – Nuclear Island
Nonradioactive Ventilation System
MCR/CSA HVAC Subsystem
(Nominal Values)

Supplemental Air Filtration Subsystem		
Quantity	2	
System capacity per unit (%)	100	
Fan Requirements		
Type	Centrifugal	
Design airflow (scfm)	4,000	
Fan static pressure (in. wg)	14	
Heating Coil Requirements		
Type	Electric	
Capacity (kw)	20	
Filter Requirements		
High efficiency filter, minimum ASHRAE efficiency (%)	80	
HEPA filter, DOP efficiency (%)	99.97	
Post filter, DOP efficiency (%)	95	
Charcoal Adsorber Requirements		
Bed depth (in.)	4.0	
Decontamination efficiency (%)	90	
Air residence time (sec.)	0.5	
MCR Envelope Leakage Rates		
Leakage	**Inleakage Rate at 1/8 in. wg (scfm)**	**Outleakage Rate at 1/8 in. wg (scfm)**
MCR access doors	--	Note 1
CSA access doors	--	10
MCR structure	--	Note 1
CSA structure	--	500
MCR/CSA HVAC equipment & ductwork (operating)	25	485

Note:
1. The total outleakage rate from the MCR access doors and the MCR structure is 5 scfm.

Table 9.4.1-2 (Sheet 1 of 3)
Component Data – Nuclear Island
Nonradioactive Ventilation System
Class 1E Electrical Room HVAC Subsystem
(Nominal Values)

Division "A & C" Supply Air Handling Units	
Quantity	2
System capacity per unit (%)	100
Supply Fan Requirements	
Type	Centrifugal
Design airflow (scfm)	18,500
Fan static pressure (in. wg)	6.5
Return Air/Smoke Purge Fan Requirements	
Type	Centrifugal
Design airflow (scfm)	16,000
Fan static pressure (in. wg)	6.0
Cooling Coil Requirements	
Type	Chilled Water
Capacity (Btu/hr)	960,000
Water flow (gpm)	See Table 9.2.7-1
Heating Coil Requirements	
Type	Electric
Capacity (kw)	290
Filter Requirements	
Low efficiency filter, minimum ASHRAE efficiency (%)	25
High efficiency filter, ASHRAE efficiency (%)	80

Table 9.4.1-2 (Sheet 2 of 3)
Component Data – Nuclear Island
Nonradioactive Ventilation System
Class 1E Electrical Room HVAC Subsystem
(Nominal Values)

Division "A & C" Class 1E Battery Room Exhaust Fans	
Quantity per electrical division	2
System capacity per fan (%)	100
Type	Centrifugal
Design airflow (scfm)	1,600
Fan static pressure (in. wg)	3.5
Division "B & D" Supply Air Handling Units	
Quantity	2
System capacity per unit (%)	100
Supply Fan Requirements	
Type	Centrifugal
Design airflow (scfm)	14,500
Fan static pressure (in. wg)	6.5
Return Air/Smoke Purge Fan Requirements	
Type	Centrifugal
Design airflow (scfm)	12,600
Fan static pressure (in. wg)	6.0
Cooling Coil Requirements	
Type	Chilled Water
Capacity (Btu/hr)	550,000
Water flow (gpm)	See Table 9.2.7-1
Heating Coil Requirements	
Type	Electric
Capacity (kw)	140
Filter Requirements	
Low efficiency filter, minimum ASHRAE efficiency (%)	25
High efficiency filter, ASHRAE efficiency (%)	80

Table 9.4.1-2 (Sheet 3 of 3)
Component Data – Nuclear Island
Nonradioactive Ventilation System
Class 1E Electrical Room HVAC Subsystem
(Nominal Values)

Division "B & D" Class 1E Battery Room Exhaust Fans	
Quantity per electrical division	2
System capacity per fan (%)	100
Type	Centrifugal
Design airflow (scfm)	1,200
Fan static pressure (in. wg)	3.5

Table 9.4.1-3
Component Data – Nuclear Island
Nonradioactive Ventilation System
Passive Containment Cooling System
Valve Room Heating and Ventilation Subsystem
(Nominal Values)

Exhaust Fan Data	
Quantity	1
System capacity per fan (%)	100
Type	Propeller
Design airflow (scfm)	1,300
Fan static pressure (in. wg)	0.75
Electric Unit Heater	
Quantity	2
System capacity per unit heater (%)	100
Type	Horizontal
Capacity (kw)	10

Table 9.4.2-1
Component Data –
Annex/Auxiliary Buildings Nonradioactive HVAC System
Switchgear Room HVAC Subsystem
(Nominal Values)

Air Handling Units	
Quantity	2
System capacity per unit (%)	100
Supply Fan Requirements	
Type	Centrifugal
Design airflow (scfm)	31,000
Static pressure (in. wg)	6.5
Return/Exhaust Fan Requirements	
Type	Centrifugal
Design airflow (scfm)	31,000
Static pressure (in. wg)	3.0

Table 9.4.2-2
Component Data –
Annex/Auxiliary Buildings Nonradioactive HVAC System
Equipment Room HVAC System
(Nominal Values)

Supply Air Handling Units	
Quantity	2
System capacity per unit (%)	100
Supply Fan Requirements	
Type	Centrifugal
Design airflow (scfm)	31,000
Static pressure (in. wg)	6.9
Return/Exhaust Fan Requirements	
Type	Centrifugal
Design airflow (scfm)	28,700
Static pressure (in. wg)	3.0
Battery Room Exhaust Fans	
Quantity	2
System capacity per unit (%)	100
Type	Centrifugal
Design airflow (scfm)	750
Static pressure (in. wg)	1.5

Table 9.4.3-1
Component Data – Radiologically Controlled Area Ventilation System Auxiliary/Annex Building Ventilation Subsystem (Nominal Values)

Normal Residual Heat Removal Pump Room Unit Coolers	
Quantity	2
System capacity per unit (%)	100
Fan Requirements	
Type	Centrifugal
Design airflow (scfm)	2,500
Fan static pressure (in. wg)	4.5
Cooling Coil Requirements	
Type	Chilled Water
Capacity (Btu/hr)	102,000
Water flow (gpm)	See Table 9.2.7-1
Filter Requirements	
Low efficiency filter, minimum ASHRAE efficiency (%)	25
Chemical and Volume Control Makeup Pump Room Unit Coolers	
Quantity	2
System capacity per unit (%)	100
Fan Requirements	
Type	Centrifugal
Design airflow (scfm)	2,500
Fan static pressure (in. wg)	3.0
Cooling Coil Requirements	
Type	Chilled Water
Capacity (Btu/hr)	164,000
Water flow (gpm)	See Table 9.2.7-1
Filter Requirements	
Low efficiency filter, minimum ASHRAE efficiency (%)	25

Table 9.4.6-1
Component Data – Containment Recirculation Cooling System
Containment Recirculation Fan Coil Unit Subsystem
(Nominal Values)

Reactor Containment Recirculation Fan Coil Assemblies	
Quantity	2
Fan coil units per assembly	2
System capacity per assembly (%)	100
Fan Data	
Quantity (fans/unit)	1
Type	Vaneaxial
Normal design air flow (scfm)	62,800
Low speed design air flow (scfm)	37,200
Fan static pressure (in. wg)	11
Cooling Coil Data	
Quantity (coil bank/unit)	3
Total cooling load (Btu/hr)	3,804,500
Total chilled water flow rate (gpm)	475
Total heating load (Btu/hr)	2,247,857
Total hot water flow rate (gpm)	225

Table 9.4.7-1 (Sheet 1 of 2)
Component Data – Containment Air Filtration System
(Nominal Values)

Supply Air Handling Units	
Quantity	2
System capacity per assembly (%)	100
Supply Fan Requirements	
Type	Centrifugal
Design airflow (scfm)	4,000
Fan static pressure (in. wg)	14
Cooling Coil Requirements	
Type	Chilled Water
Capacity (Btu/hr)	380,000
Water flow (gpm)	41
Heating Coil Requirements	
Type	Hot Water
Capacity (Btu/hr)	290,000
Filter Requirements	
Low efficiency filter, minimum ASHRAE efficiency (%)	25
High efficiency filter, minimum ASHRAE efficiency (%)	80

Table 9.4.7-1 (Sheet 2 of 2)
Component Data – Containment Air Filtration System
(Nominal Values)

Exhaust Air Filtration Units	
Quantity	2
System capacity per assembly (%)	100
Fan Requirements	
Type	Centrifugal
Design airflow (scfm)	4,000
Fan static pressure (in. wg)	27
Heating Coil Requirements	
Type	Electric
Capacity (kw)	20
Filter Requirements	
High efficiency filter, minimum ASHRAE efficiency (%)	80
HEPA filter, DOP efficiency (%)	99.97
Post filter, DOP efficiency (%)	95
Charcoal Adsorber Requirements	
Bed depth (in.)	4.0
Decontamination efficiency (%)	90
Air residence time (sec.)	0.5

Table 9.4.10-1 (Sheet 1 of 2)
Component Data – Diesel Generator
Building Heating And Ventilation System
Normal Heating and Ventilation Subsystem
(Nominal Values)

Engine Room Air Handling Unit	
Quantity	2 (one per diesel generator room)
System capacity per unit (%)	100
Fan Requirements	
Type	Centrifugal
Design airflow (scfm)	15,000
Static pressure (in. wg)	3.4
Filter Requirements	
Low efficiency filter, minimum ASHRAE efficiency (%)	25
High efficiency filter, minimum ASHRAE efficiency (%)	80
Service Module Air Handling Unit	
Quantity	2 (one per diesel generator room)
System capacity per unit (%)	100
Fan Requirements	
Type	Centrifugal
Design airflow (scfm)	2,300
Static pressure (in. wg)	3.6
Motor nameplate horsepower	3.0
Heating Coil Requirements	
Type	Electric
Capacity (kw)	20 (two stages)
Filter Requirements	
Low efficiency filter, minimum ASHRAE efficiency (%)	25
High efficiency filter, minimum ASHRAE efficiency (%)	80

Table 9.4.10-1 (Sheet 2 of 2)
Component Data – Diesel Generator
Building Heating And Ventilation System
Normal Heating and Ventilation Subsystem
(Nominal Values)

Electric Unit Heaters	
Quantity	4 (two per diesel generator room)
System capacity per unit (%)	50
Type	Horizontal
Capacity (kw)	30

Table 9.4.10-2
Component Data – Diesel Generator Building Heating and Ventilation System Standby Exhaust Ventilation Subsystem (Nominal Values)

Standby Exhaust Fan	
Quantity	4 (two per diesel generator room)
System capacity per unit (%)	50
Type	Upblast Roof Ventilator
Design airflow (scfm)	25,000
Static pressure (in. wg)	0.25

Table 9.4.10-3
Component Data – Diesel Generator
Building Heating and Ventilation System
Fuel Oil Day Tank Vault Exhaust Subsystem
(Nominal Values)

Fuel Oil Day Tank Vault Exhaust Fan	
Quantity	2 (one per tank vault)
System capacity per unit (%)	100
Type	Centrifugal
Design airflow (scfm)	500
Static pressure (in. wg)	0.5

Table 9.4.10-4
Component Data – Diesel Generator Building Heating and Ventilation System Diesel Oil Transfer Module Enclosures Ventilation and Heating Subsystem (Nominal Values)

Diesel Oil Transfer Module Enclosure Exhaust Fan	
Quantity	2 (one per enclosure)
System capacity per unit (%)	100
Type	Centrifugal Roof Exhauster
Design airflow (scfm)	1,000
Static pressure (in. wg)	0.25
Electric Unit Heater	
Quantity	2 (one per enclosure)
System capacity per unit (%)	100
Type	Horizontal
Capacity (kw)	15

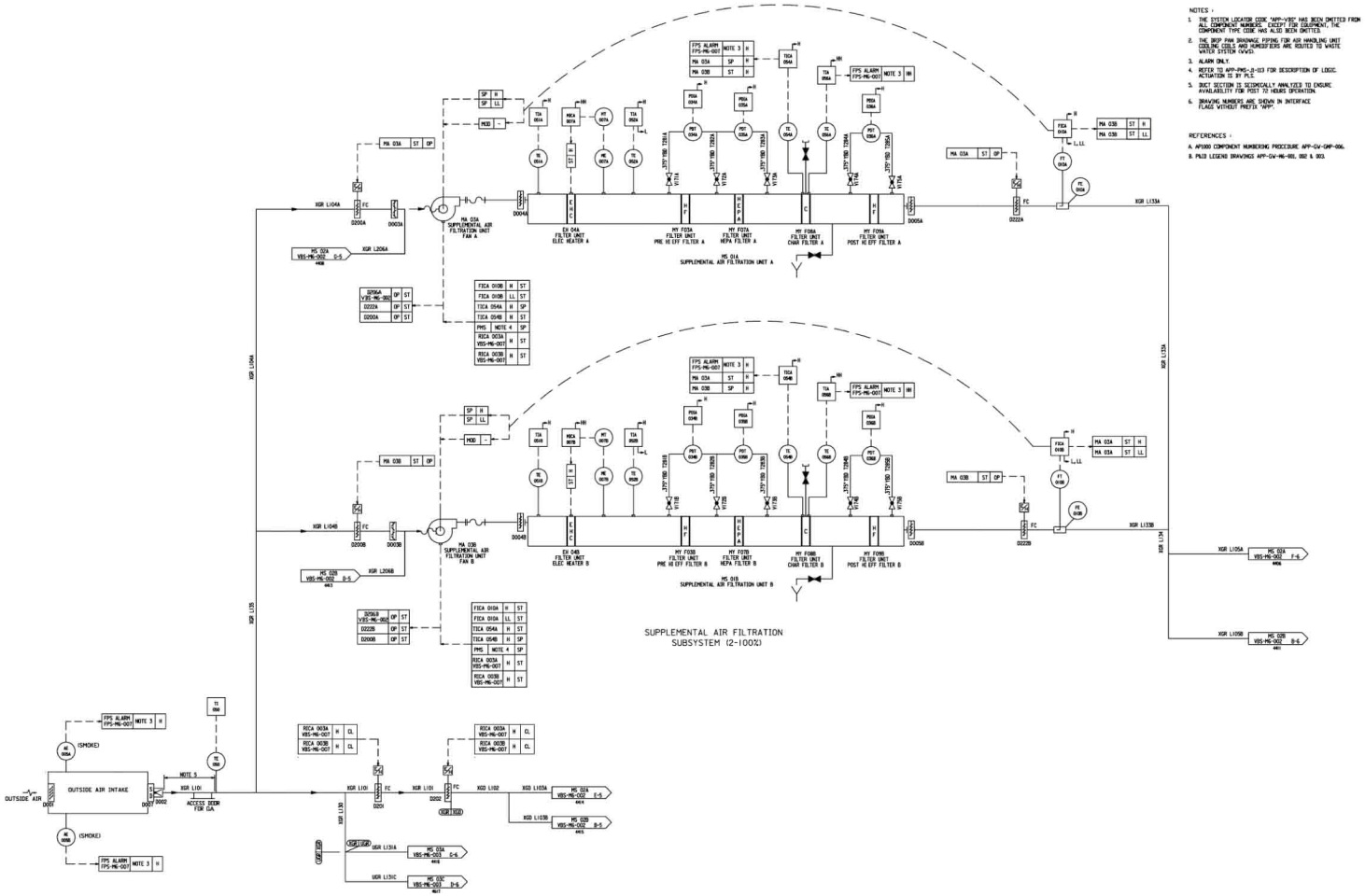

Figure represents system functional arrangement. Details internal to the system may differ as a result of implementation factors such as vendor-specific component requirements.

Inside Auxiliary Building

Figure 9.4.1-1 (Sheet 1 of 7)
Nuclear Island Non-Radioactive Ventilation System
Piping and Instrumentation Diagram
(REF) VBS 001

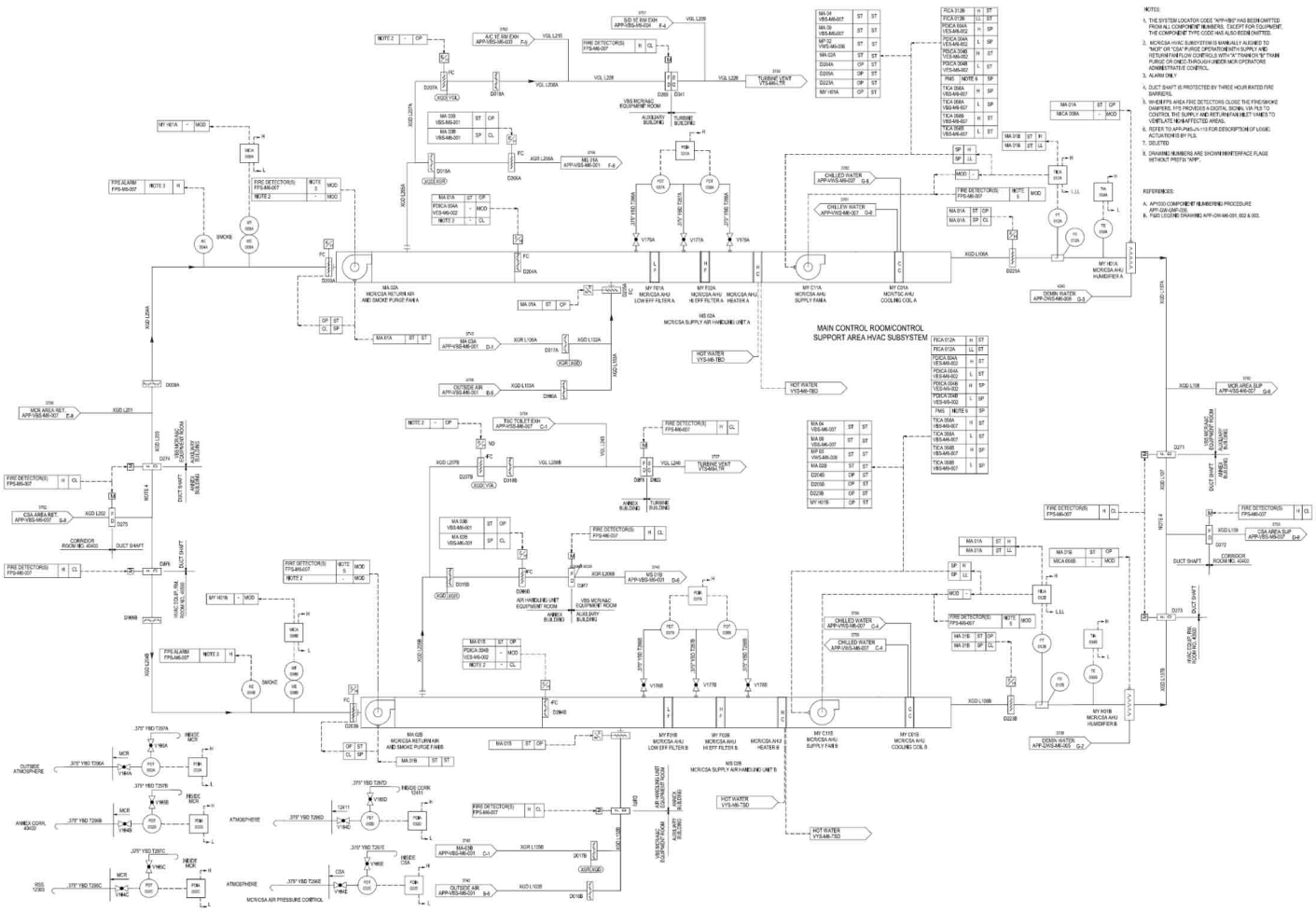

Figure represents system functional arrangement. Details internal to the system may differ as a result of implementation factors such as vendor-specific component requirements.

Inside Auxiliary Building

Figure 9.4.1-1 (Sheet 2 of 7)

Nuclear Island Non-Radioactive Ventilation System

(REF) VBS 002

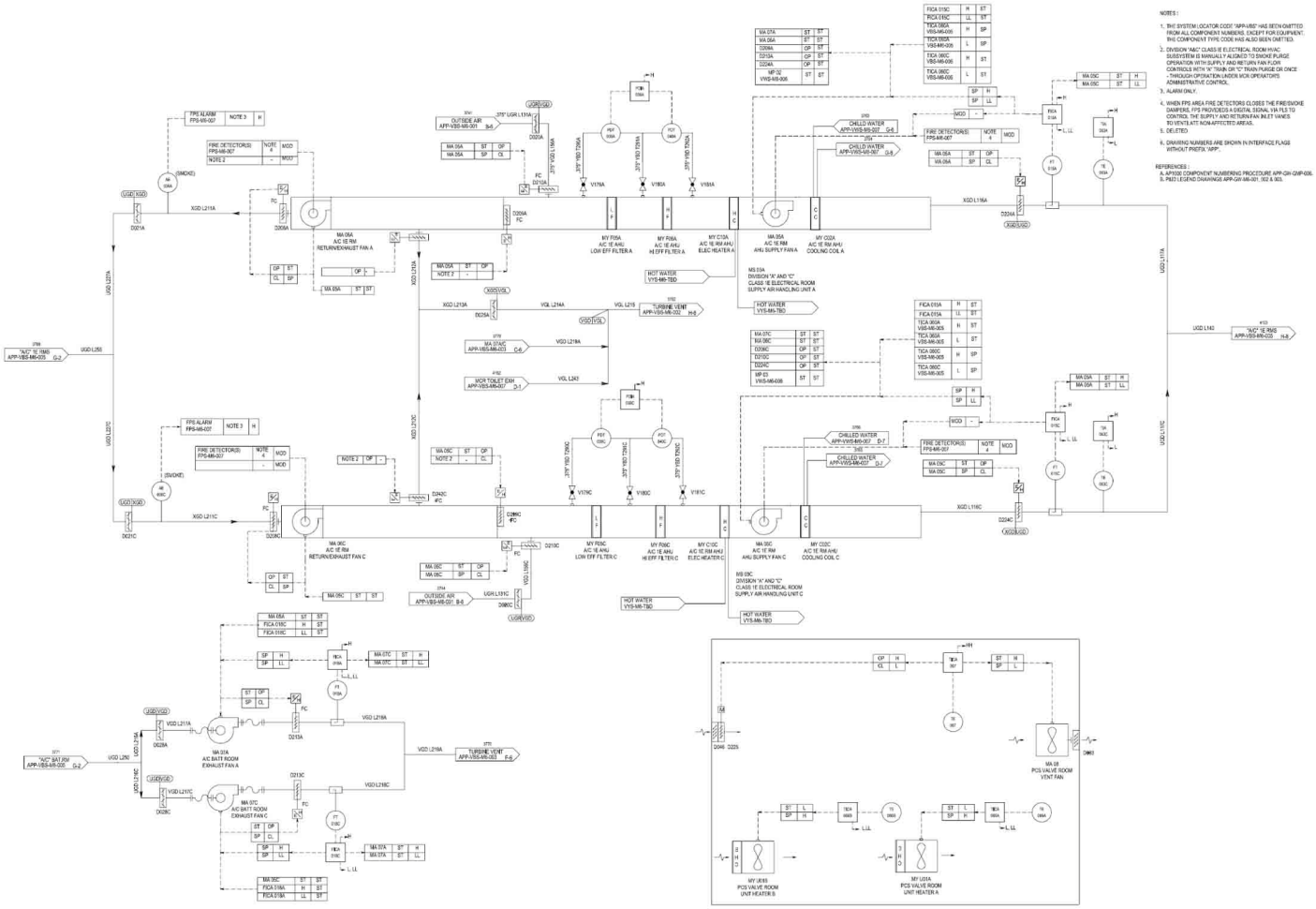

Figure represents system functional arrangement. Details internal to the system may differ as a result of implementation factors such as vendor-specific component requirements.

Inside Auxiliary Building

Figure 9.4.1-1 (Sheet 3 of 7)
Nuclear Island Non-Radioactive Ventilation System
Piping and Instrumentation Diagram
(REF) VBS 003

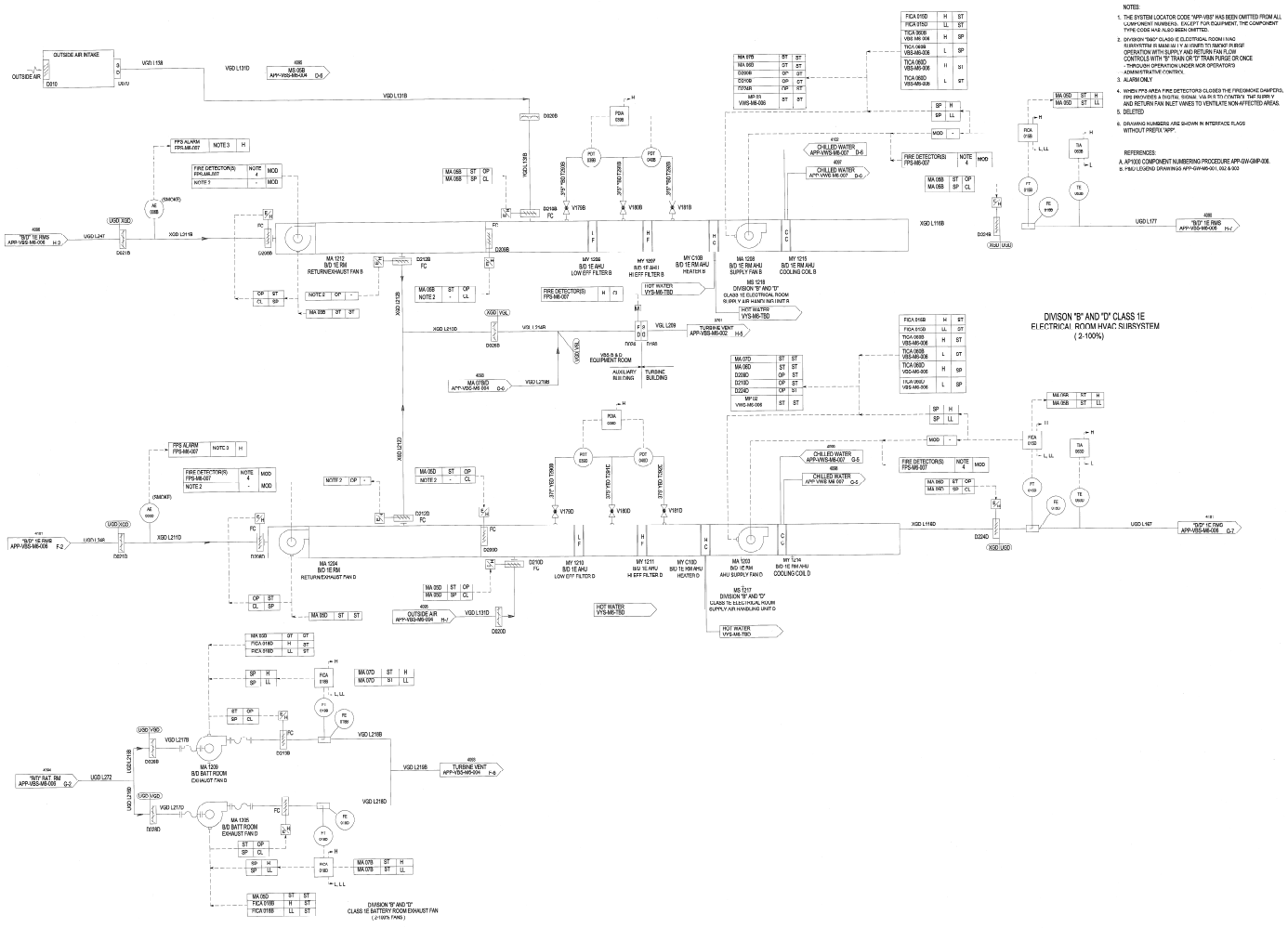

Figure represents system functional arrangement. Details internal to the system may differ as a result of implementation factors such as vendor-specific component requirements.

Inside Auxiliary Building
Figure 9.4.1-1 (Sheet 4 of 7)
Nuclear Island Non-Radioactive Ventilation System
Piping and Instrumentation Diagram
(REF) VBS 004

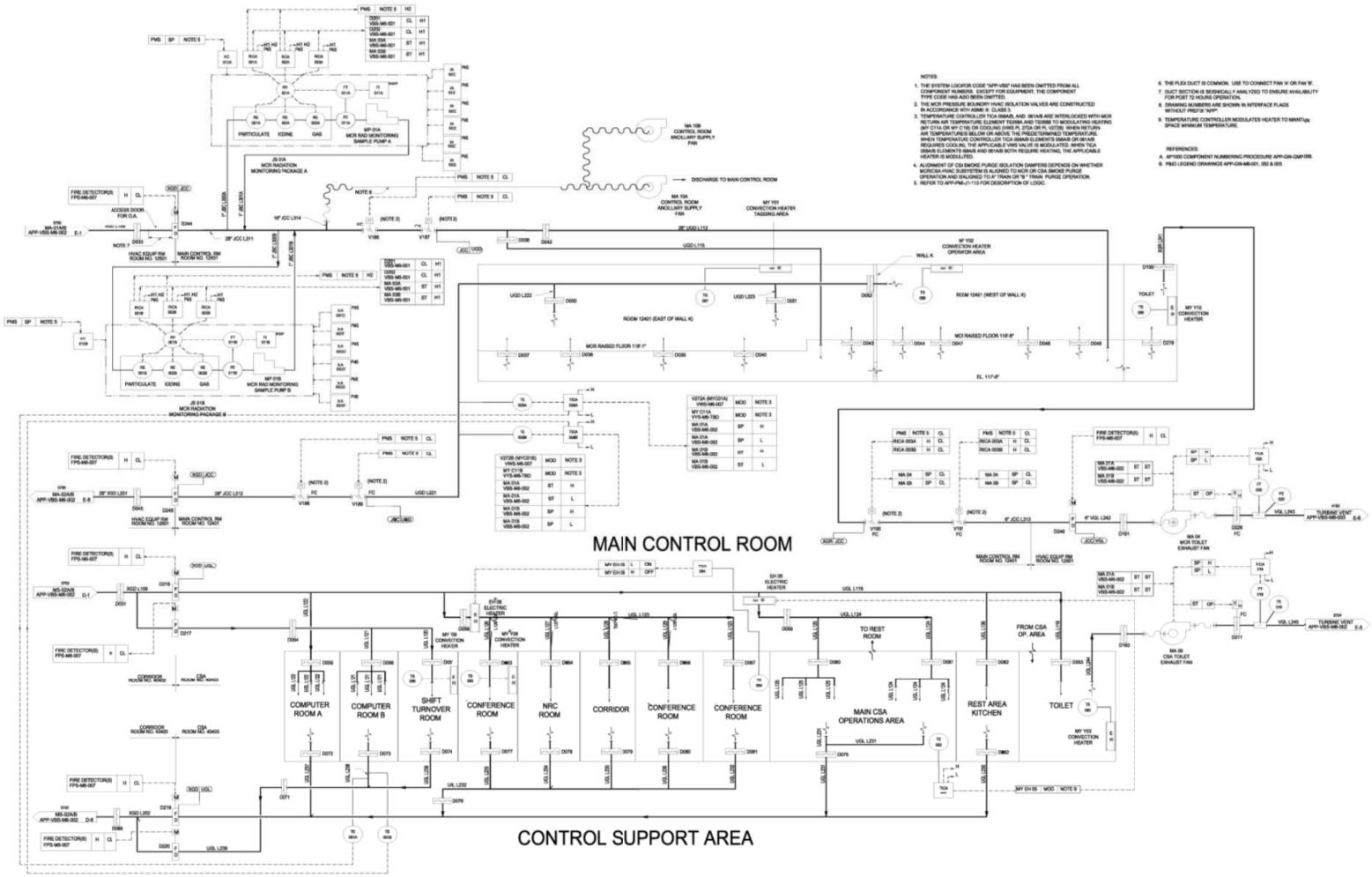

Figure represents system functional arrangement. Details internal to the system may differ as a result of implementation factors such as vendor-specific component requirements.

Inside Auxiliary Building
Figure 9.4.1-1 (Sheet 5 of 7)
Nuclear Island Non-Radioactive Ventilation System
Piping and Instrumentation Diagram
(REF) VBS 007

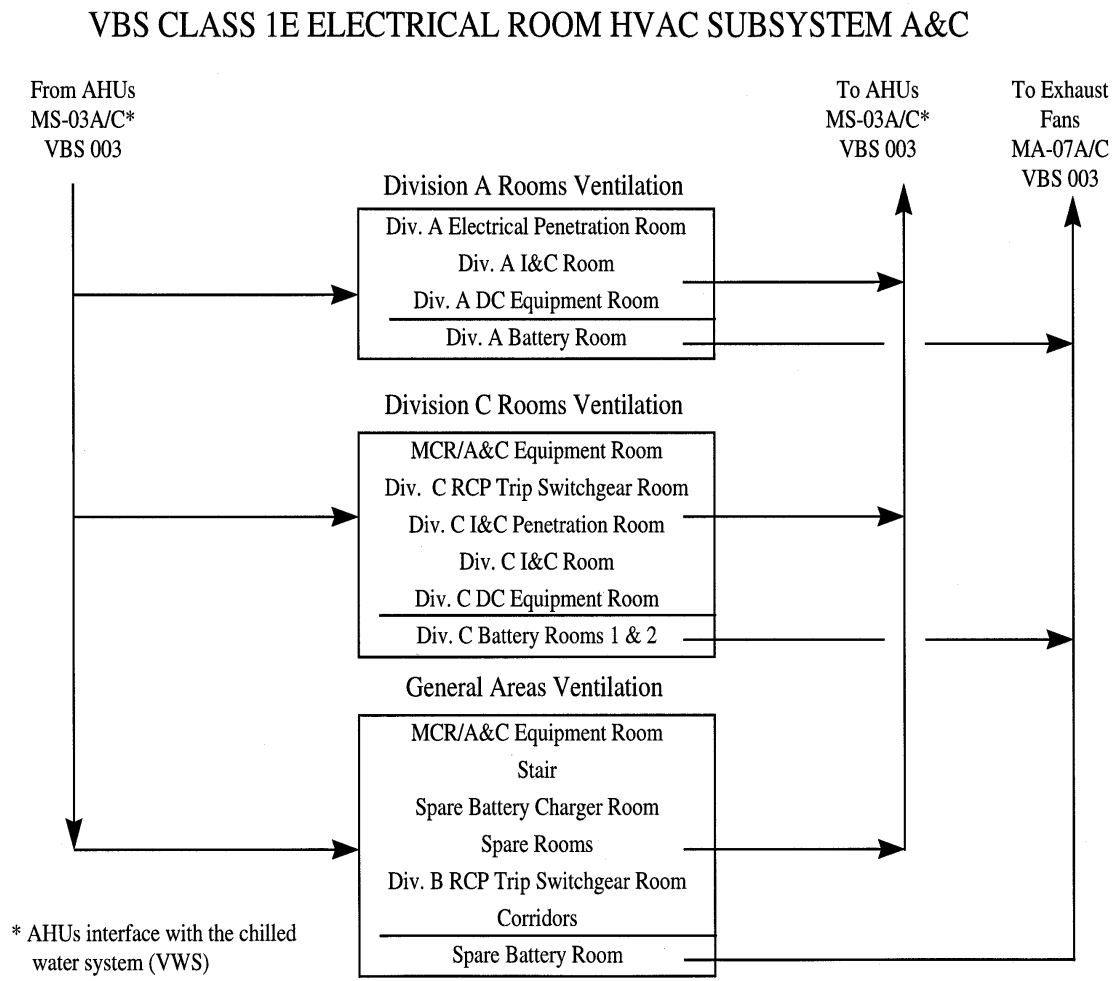

Figure represents system functional arrangement. Details internal to the system may differ as a result of implementation factors such as vendor-specific component requirements.

Figure 9.4.1-1 (Sheet 6 of 7)
Nuclear Island Non-Radioactive Ventilation System
Piping and Instrumentation System
(REF) VBS 005

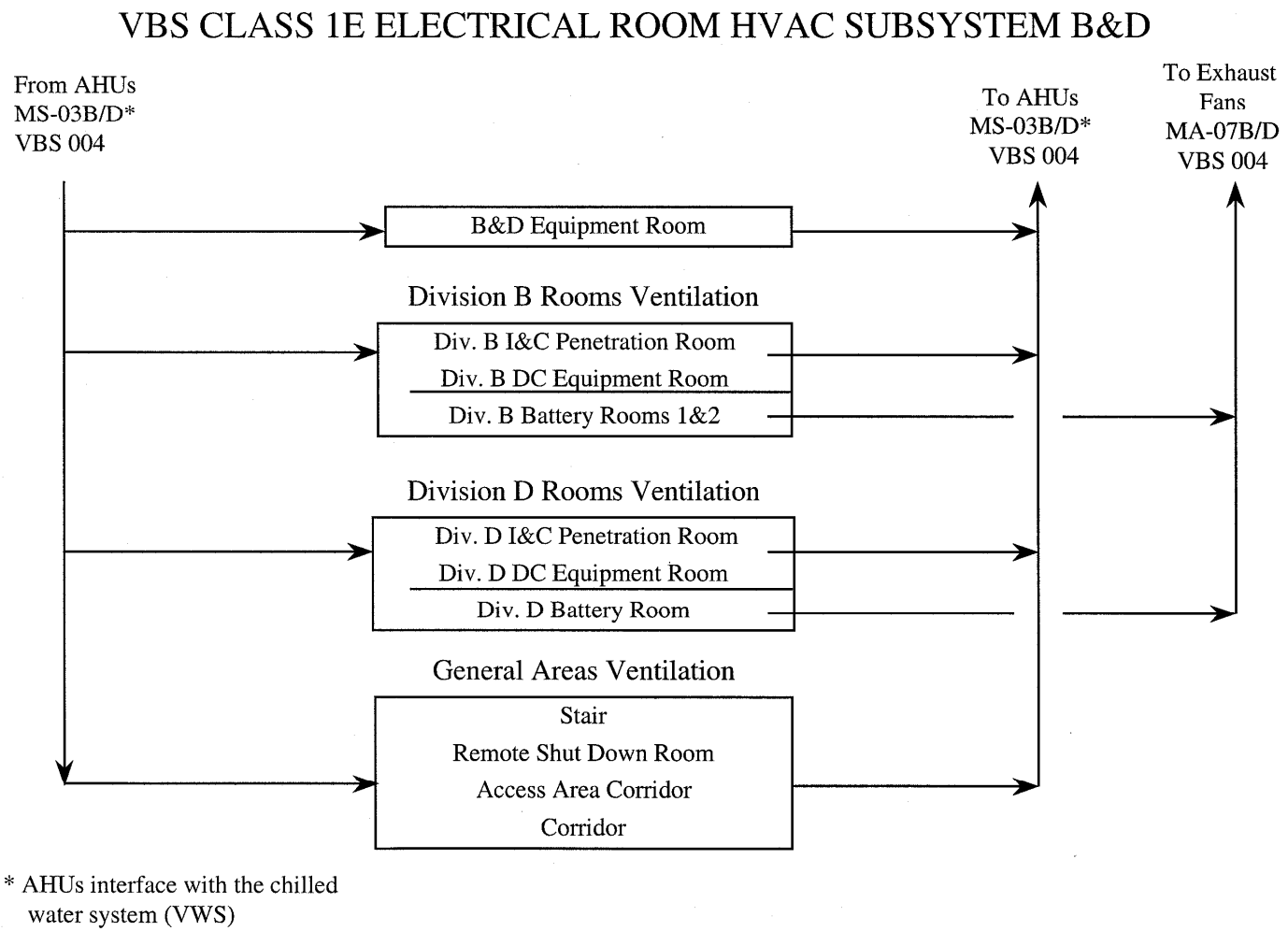

Figure represents system functional arrangement. Details internal to the system may differ as a result of implementation factors such as vendor-specific component requirements.

Figure 9.4.1-1 (Sheet 7 of 7)
Nuclear Island Non-Radioactive Ventilation System
Piping and Instrumentation Diagram
(REF) VBS 006

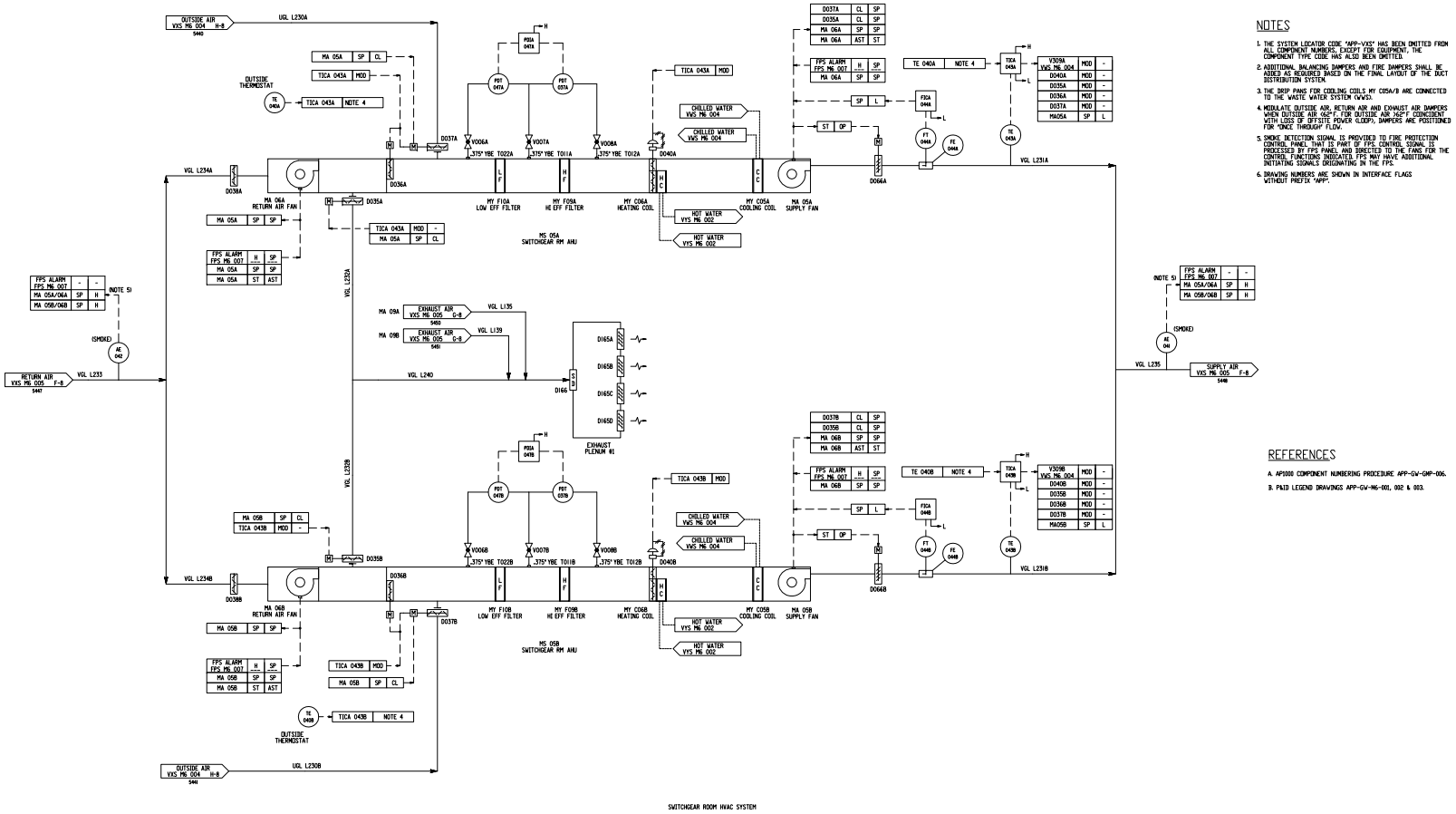

Figure represents system functional arrangement. Details internal to the system may differ as a result of implementation factors such as vendor-specific component requirements.

Inside Annex Building

Figure 9.4.2-1 (Sheet 1 of 7)
Annex/Aux Non-Radioactive Ventilation System
Piping and Instrumentation Diagram
(REF) VXS 003

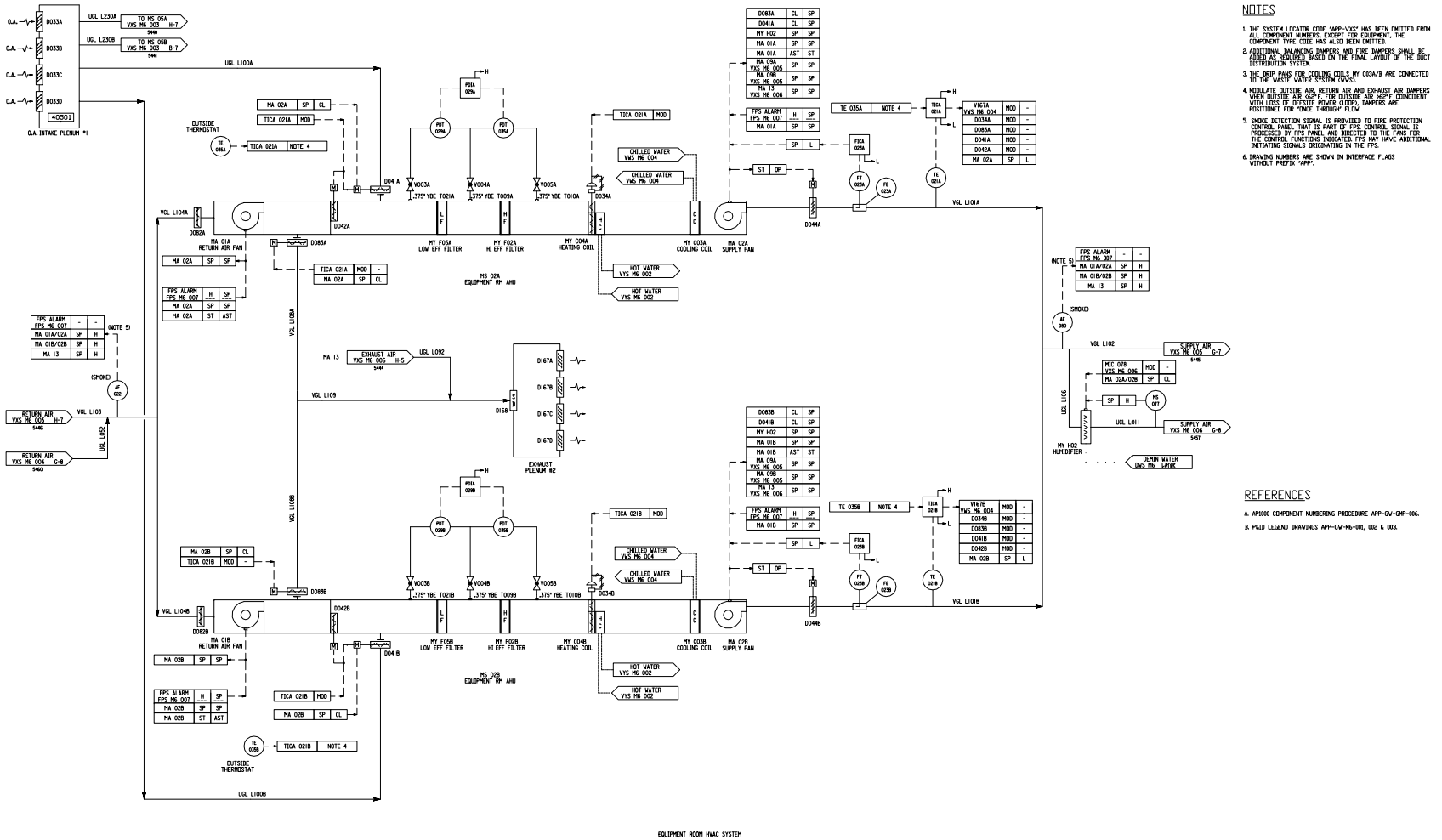

Figure represents system functional arrangement. Details internal to the system may differ as a result of implementation factors such as vendor-specific component requirements.

Inside Annex Building

Figure 9.4.2-1 (Sheet 2 of 7)
Annex/Aux Non-Radioactive Ventilation System
Piping and Instrumentation Diagram
(REF) VXS 004

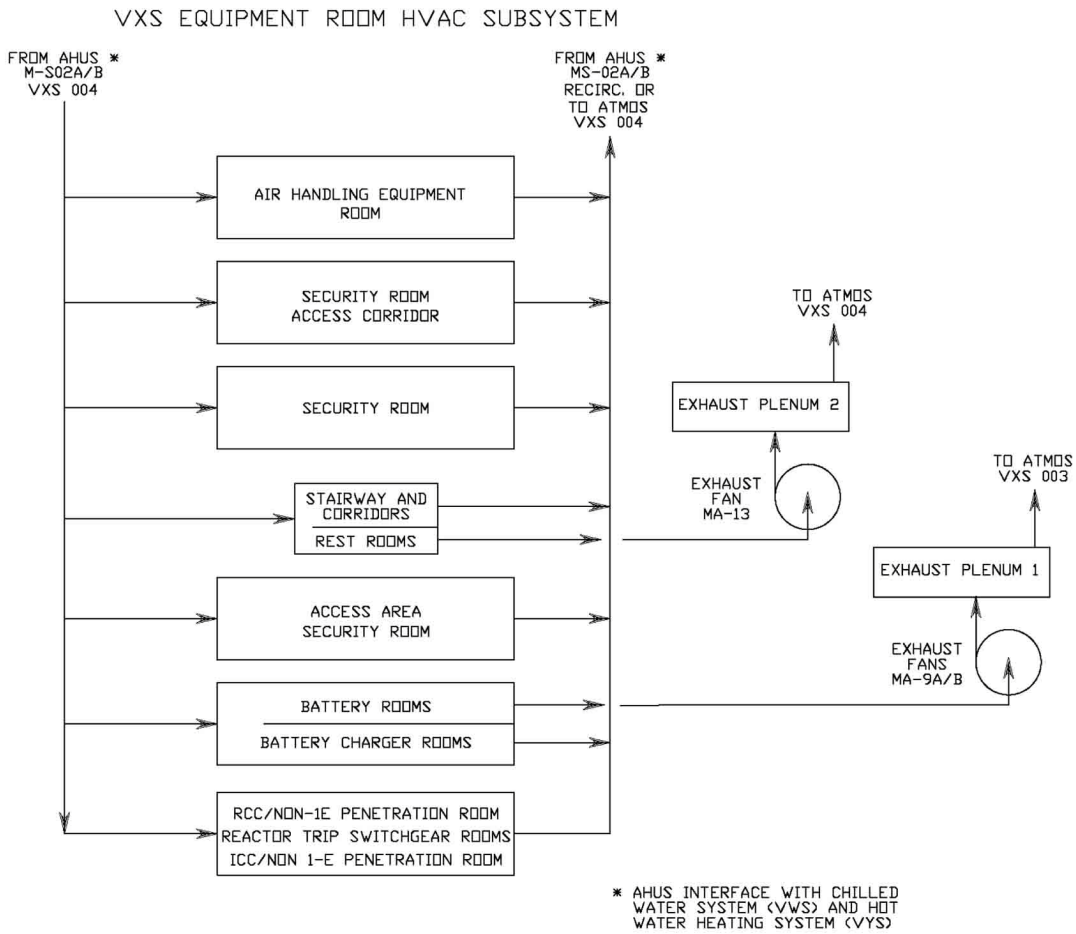

Figure represents system functional arrangement. Details internal to the system may differ as a result of implementation factors such as vendor-specific component requirements.

Inside Annex Building

Figure 9.4.2-1 (Sheet 3 of 7)
Annex/Aux Non-Radioactive Ventilation System
Piping and Instrumentation Diagram
(REF) VXS 005 & 006

VXS SWITCHGEAR ROOM HVAC SUBSYSTEM

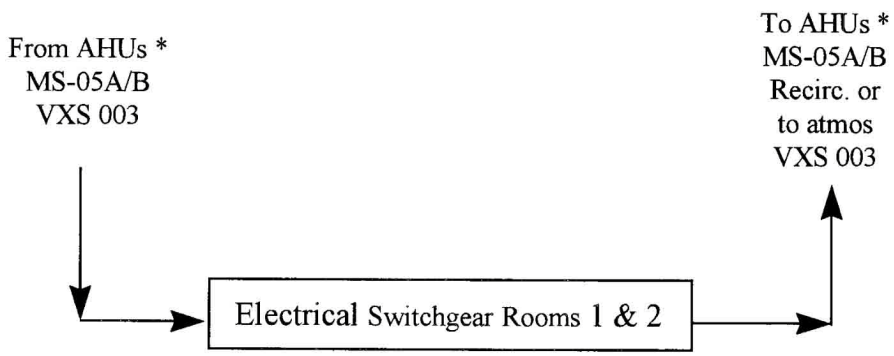

* AHUs interface with chilled water system (VWS) and hot water heating system (VYS)

Figure represents system functional arrangement. Details internal to the system may differ as a result of implementation factors such as vendor-specific component requirements.

Inside Annex Building

Figure 9.4.2-1 (Sheet 4 of 7)
Annex/Aux Non-Radioactive Ventilation System
Piping and Instrumentation Diagram
(REF) VXS 005

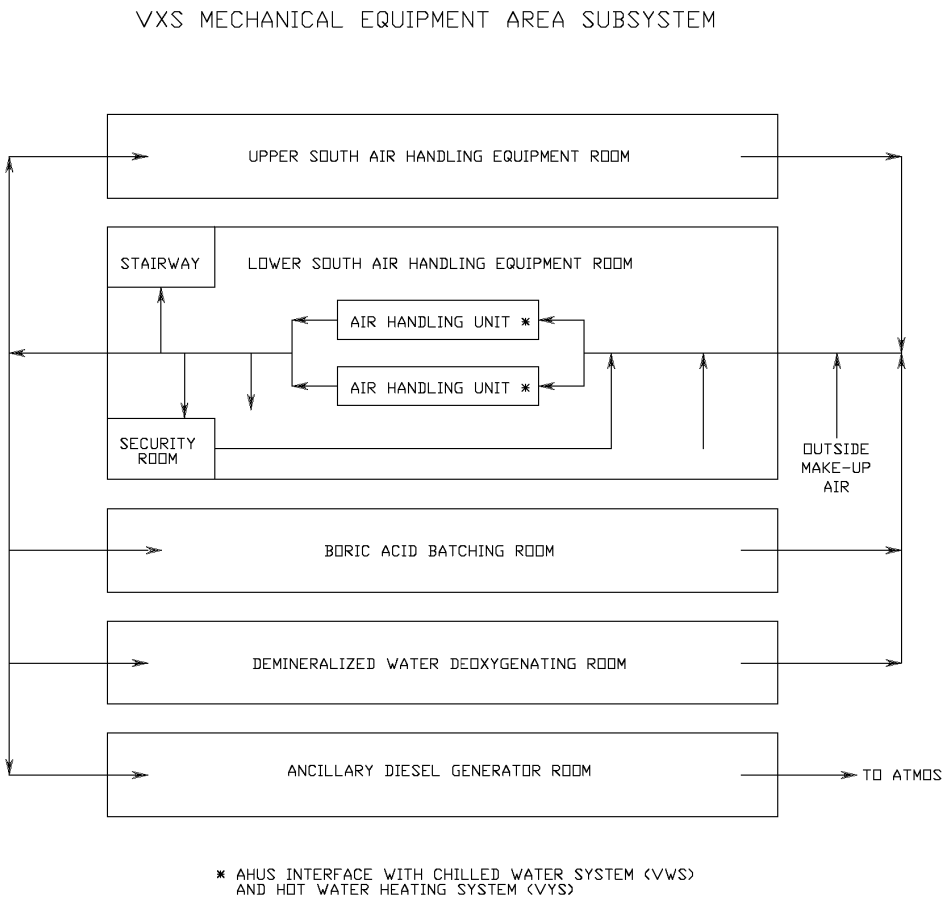

Figure represents system functional arrangement. Details internal to the system may differ as a result of implementation factors such as vendor-specific component requirements.

Inside Annex Building

Figure 9.4.2-1 (Sheet 5 of 7)
Annex/Aux Non-Radioactive Ventilation System
Piping and Instrumentation Diagram
(REF) VXS 010

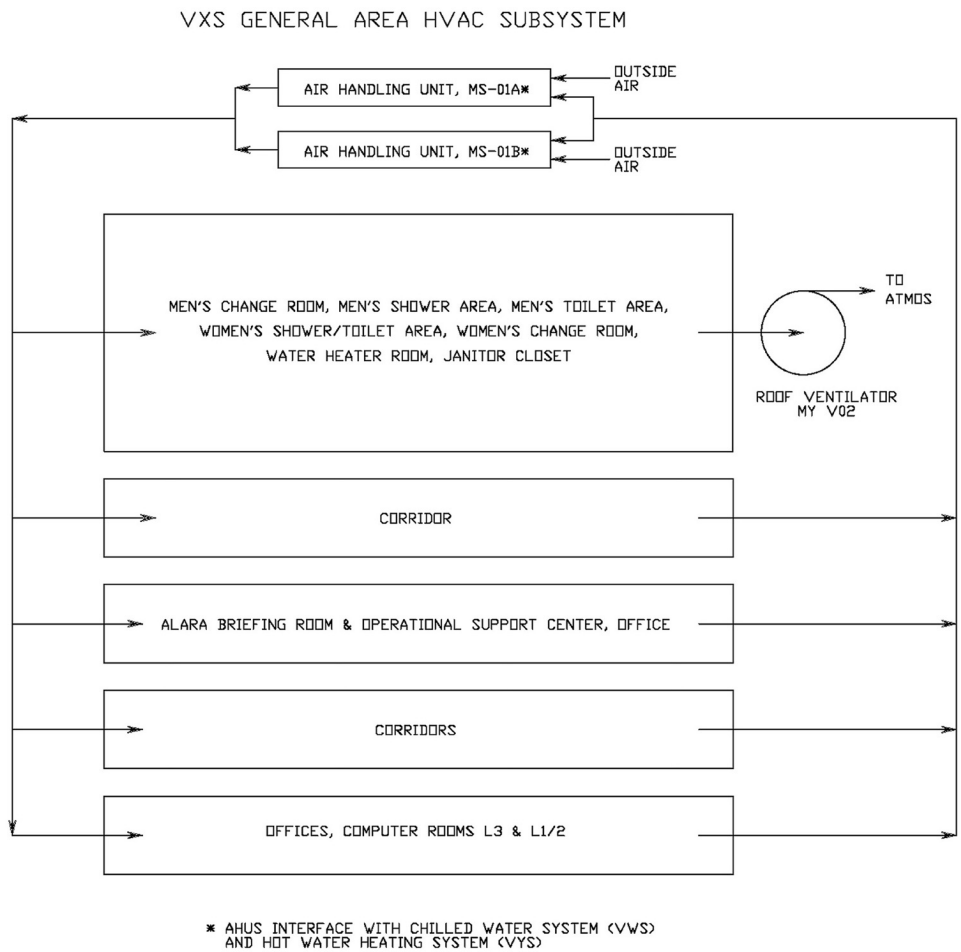

Figure represents system functional arrangement. Details internal to the system may differ as a result of implementation factors such as vendor-specific component requirements.

Inside Annex Building

Figure 9.4.2-1 (Sheet 6 of 7)
Annex/Aux Non-Radioactive Ventilation System
Piping and Instrumentation Diagram
(REF) VXS 002

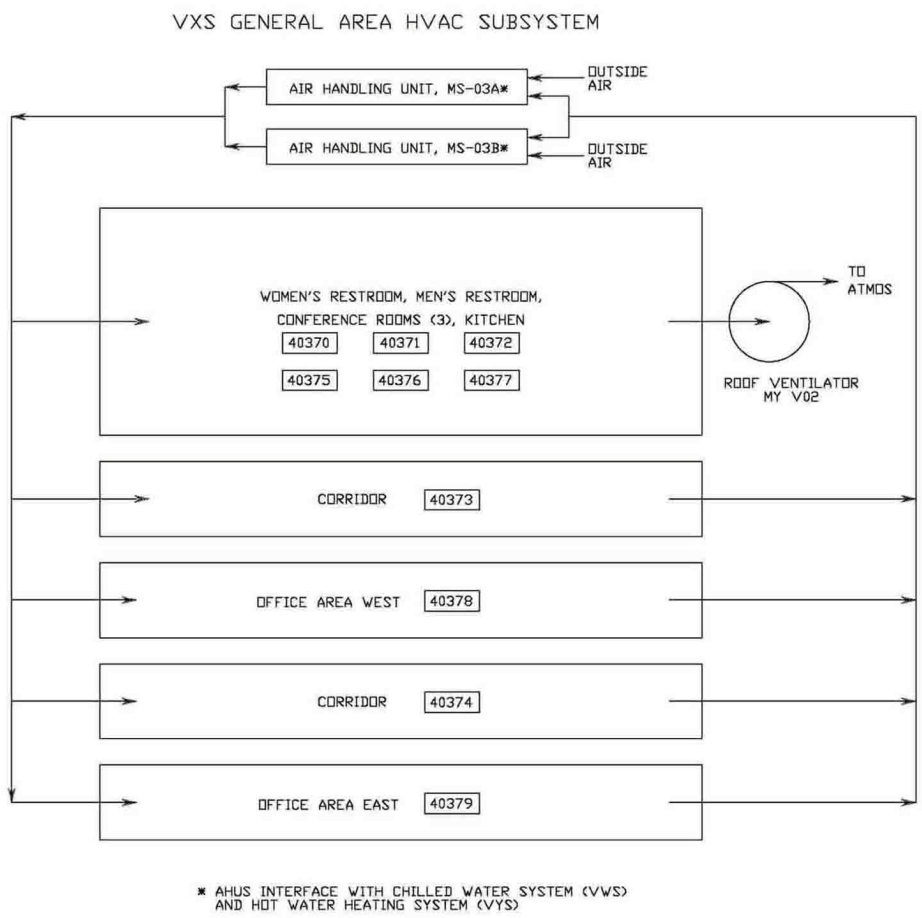

Figure represents system functional arrangement. Details internal to the system may differ as a result of implementation factors such as vendor-specific component requirements.

Inside Annex Building

Figure 9.4.2-1 (Sheet 7 of 7)
Annex/Aux Non-Radioactive Ventilation System
Piping and Instrumentation Diagram
(REF) VXS 002

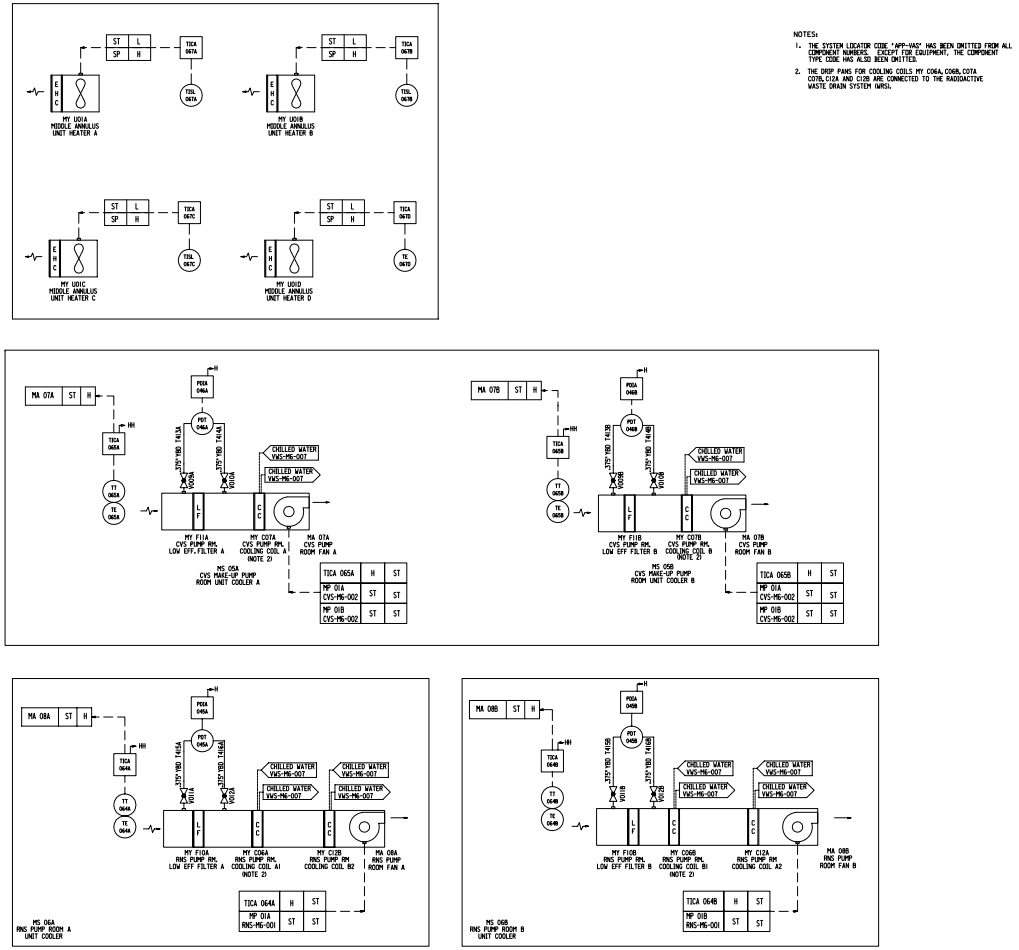

Figure represents system functional arrangement. Details internal to the system may differ as a result of implementation factors such as vendor-specific component requirements.

Inside Auxiliary Building

Figure 9.4.3-1 (Sheet 1 of 3)
Radiologically Controlled Ventilation System
Piping and Instrumentation Diagram
(REF) VAS 008

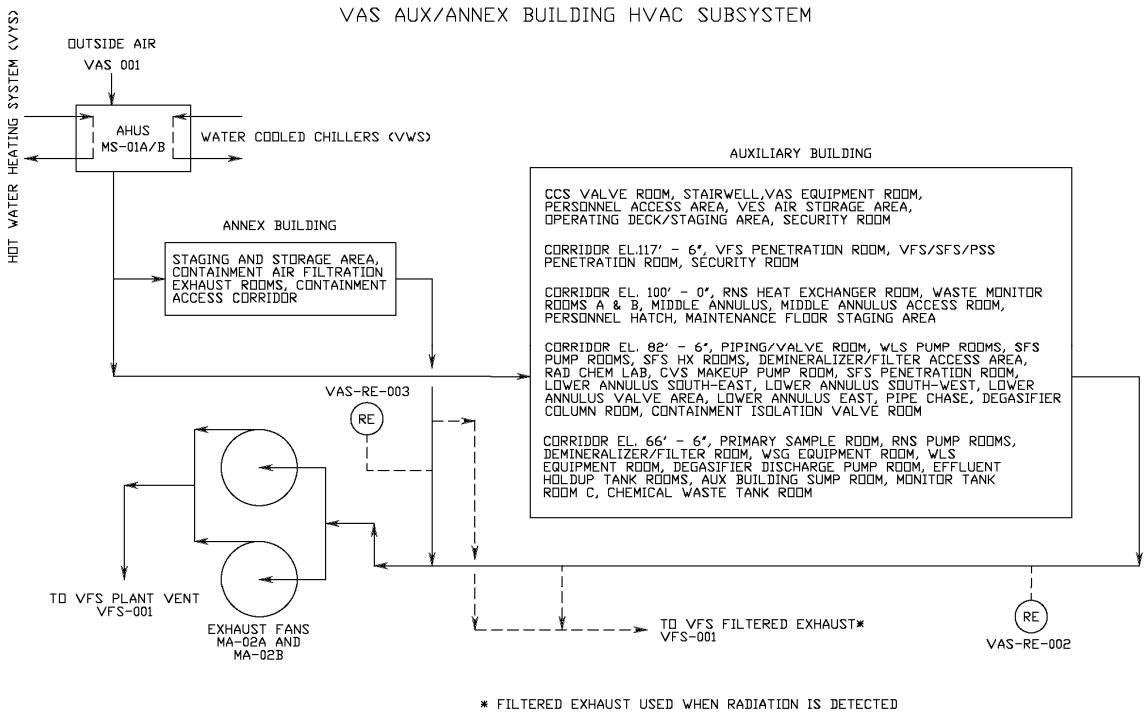

Figure represents system functional arrangement. Details internal to the system may differ as a result of implementation factors such as vendor-specific component requirements.

Figure 9.4.3-1 (Sheet 2 of 3)
Radiologically Controlled Area Ventilation System
Piping and Instrumentation Diagram
(REF) VAS 003 & 010

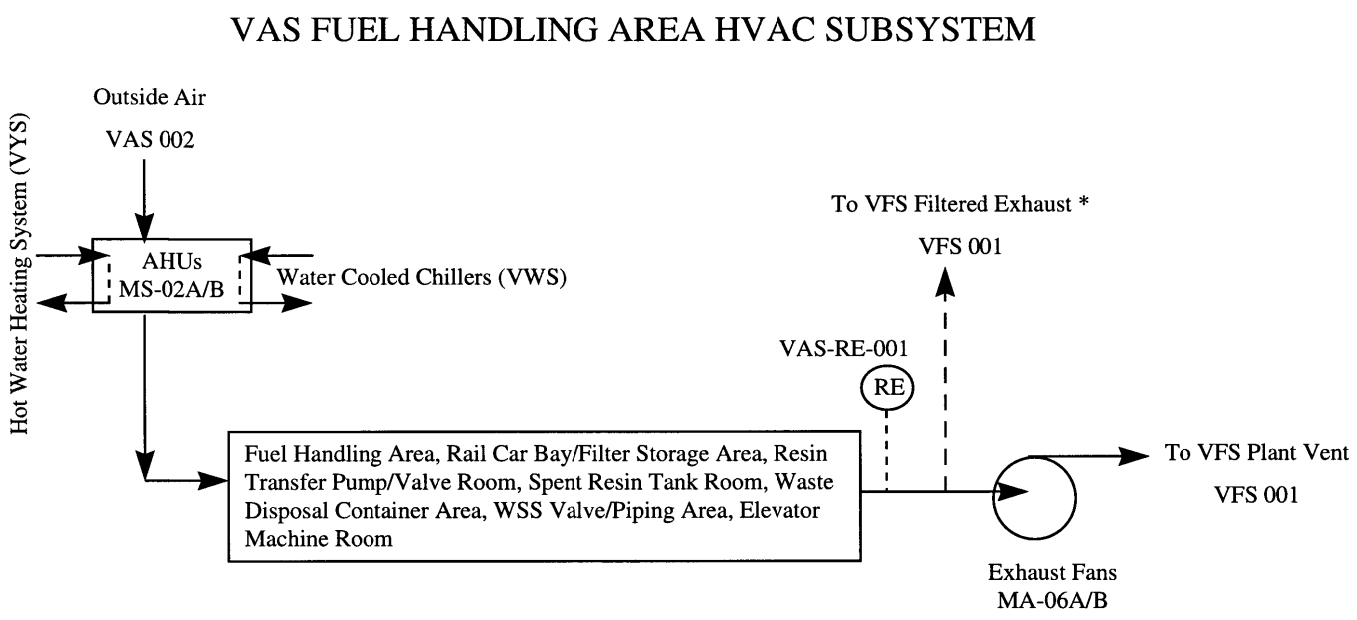

* Filtered Exhaust used when radiation is detected

Figure represents system functional arrangement. Details internal to the system may differ as a result of implementation factors such as vendor-specific component requirements.

Figure 9.4.3-1 (Sheet 3 of 3)
Radiologically Controlled Area Ventilation System
Piping and Instrumentation Diagram
(REF) VAS 005

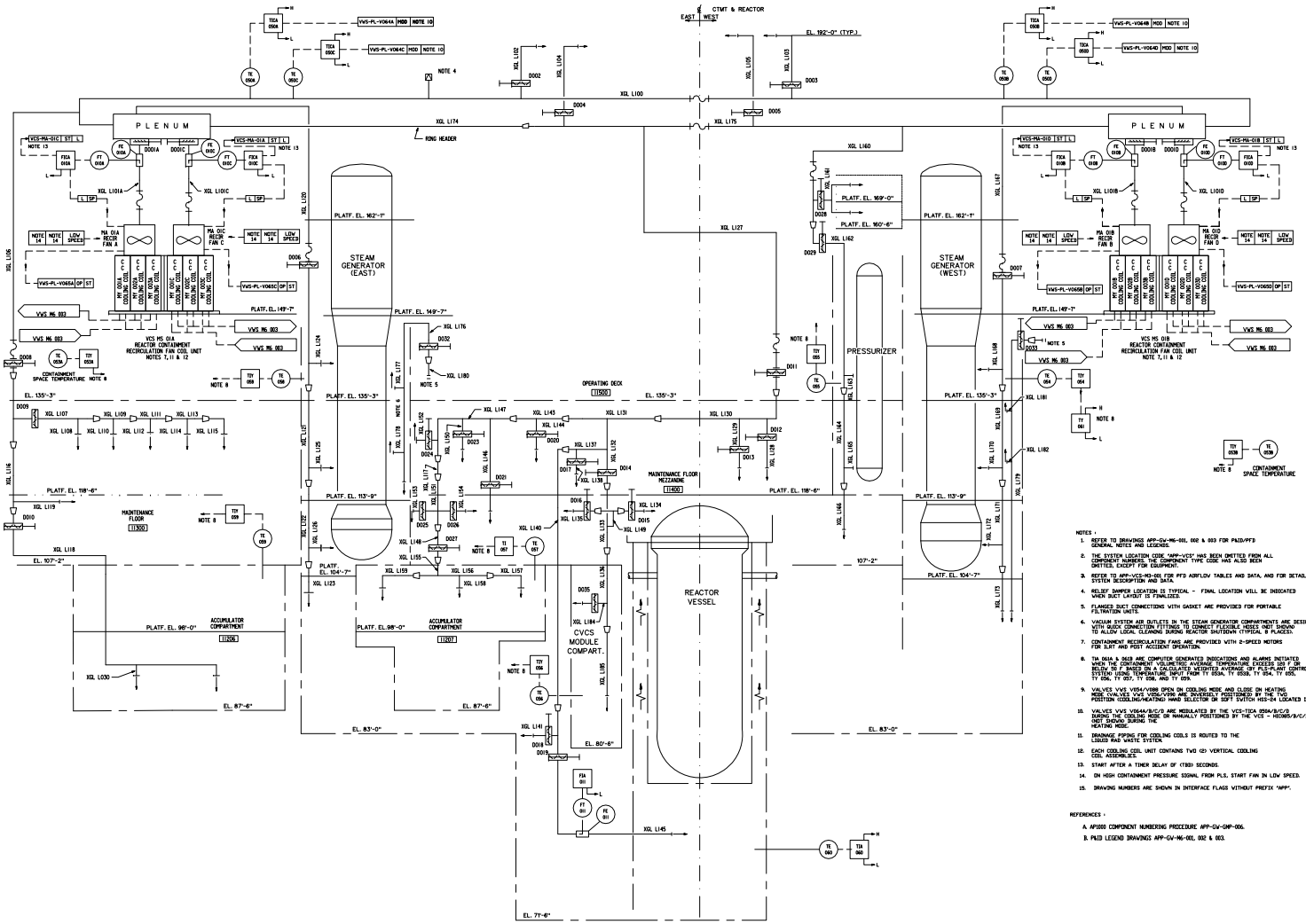

Figure represents system functional arrangement. Details internal to the system may differ as a result of implementation factors such as vendor-specific component requirements.

Figure 9.4.6-1
Containment Recirculation Cooling System Piping and Instrumentation Diagram (REF) VCS 001

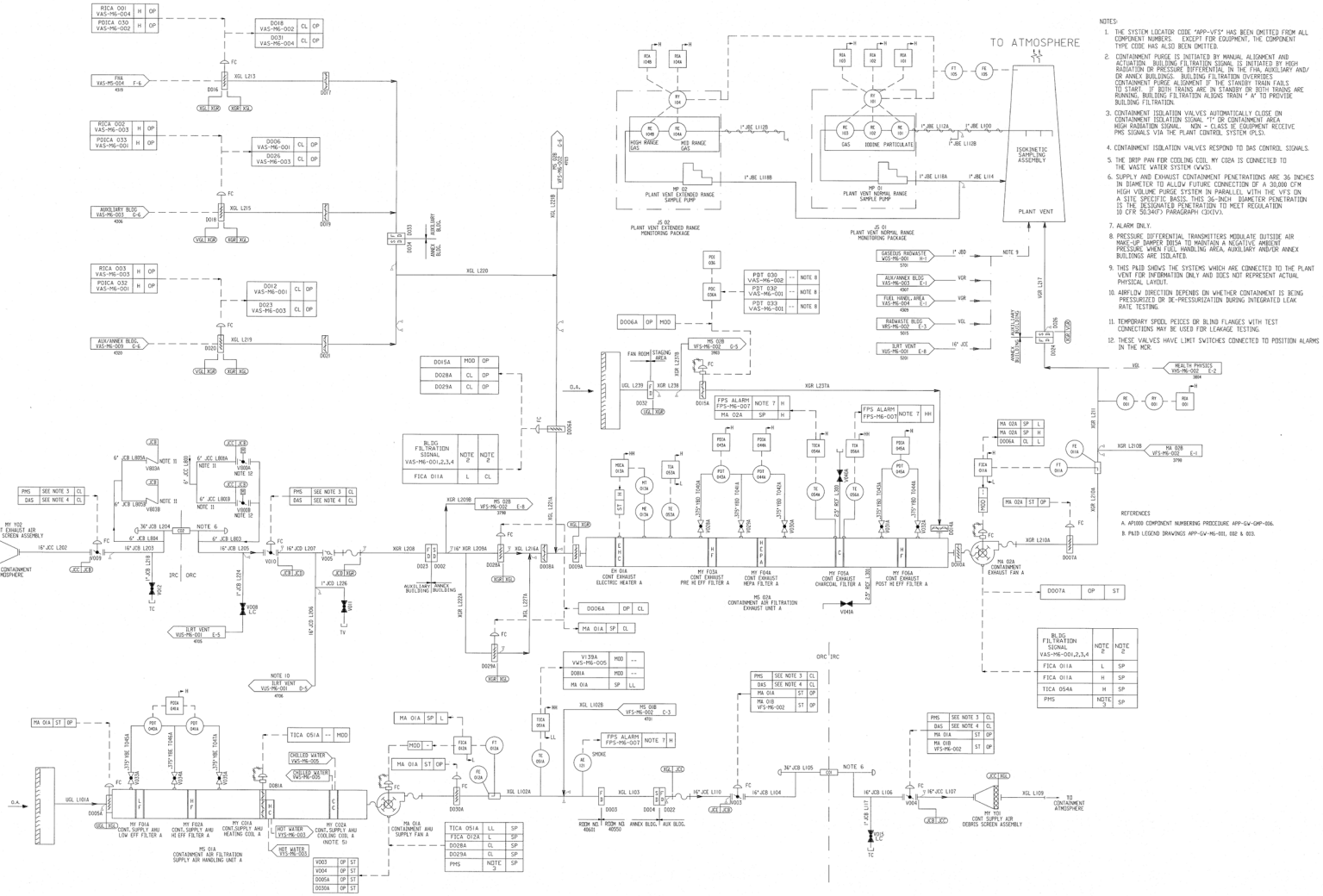

Figure represents system functional arrangement. Details internal to the system may differ as a result of implementation factors such as vendor-specific component requirements.

Figure 9.4.7-1 (Sheet 1 of 2)
Containment Air Filtration System
Piping and Instrumentation Diagram
(REF) VFS 001

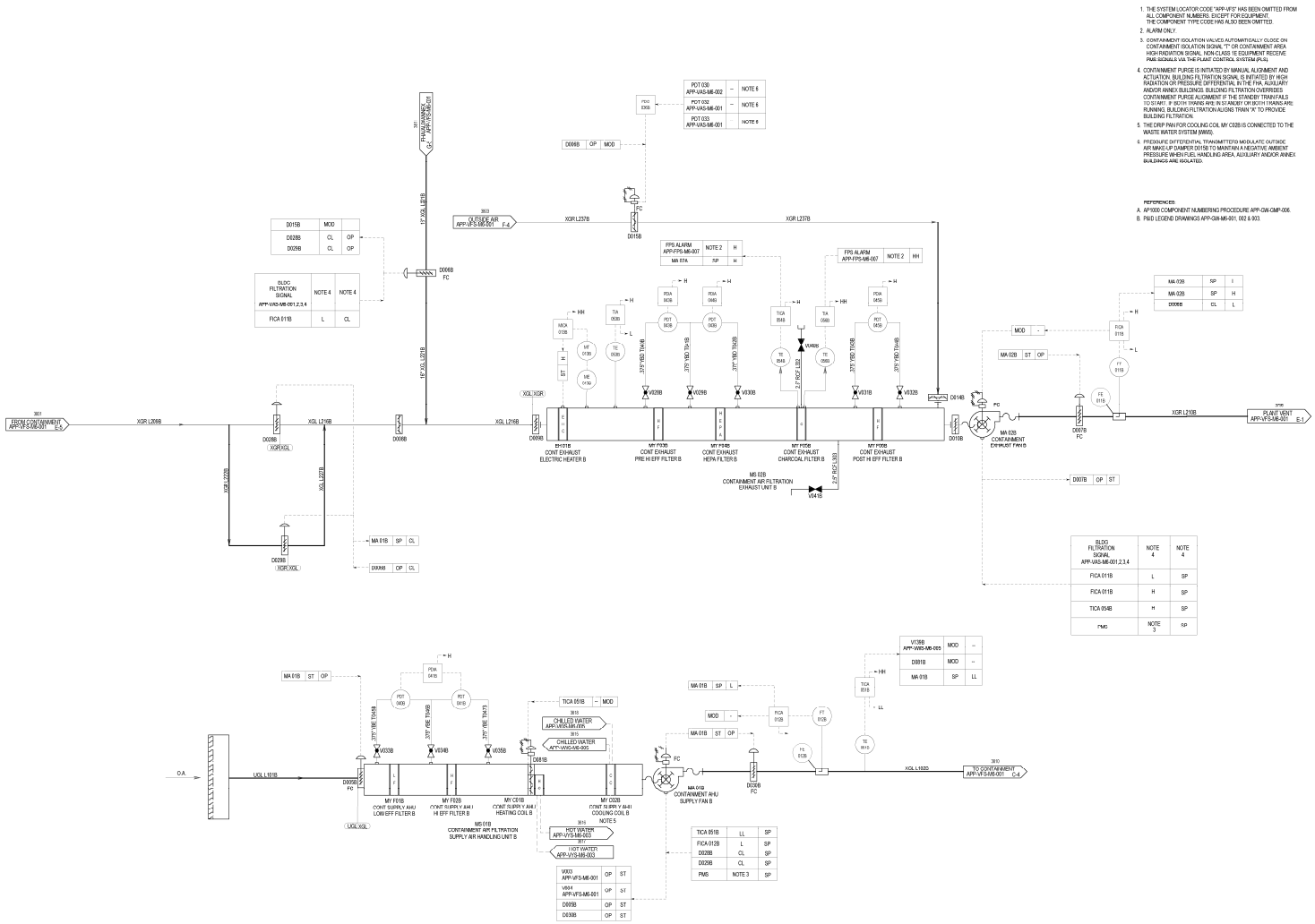

Figure represents system functional arrangement. Details internal to the system may differ as a result of implementation factors such as vendor-specific component requirements.

Figure 9.4.7-1 (Sheet 2 of 2)
Containment Air Filtration System
Piping and Instrumentation Diagram
(REF) VFS 002

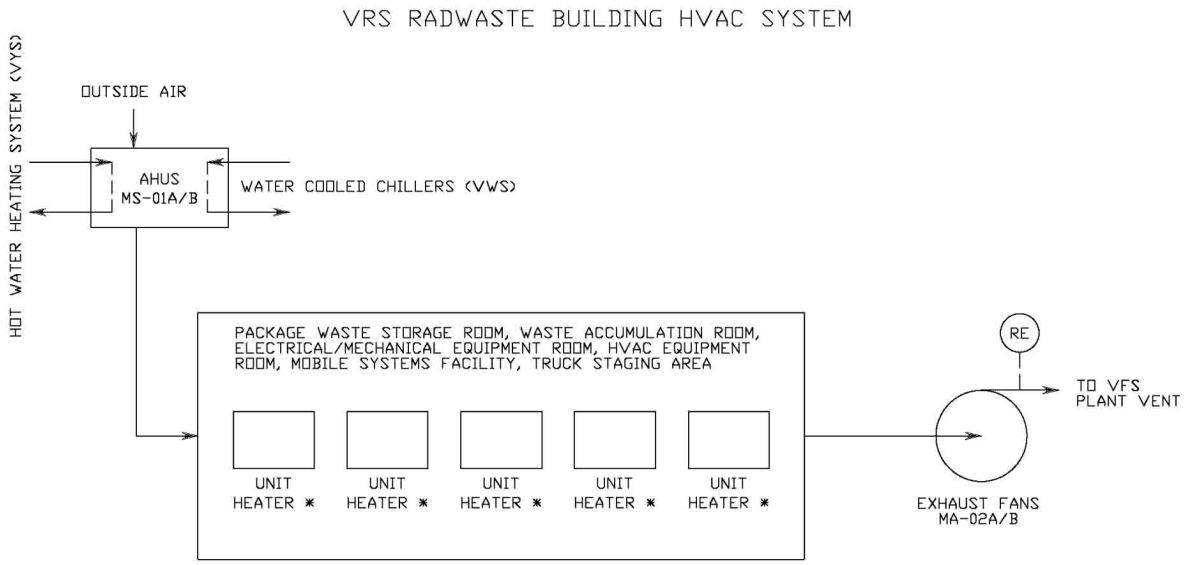

Figure 9.4.8-1
Radwaste Building HVAC System
(REF) VRS 001, 002, 003

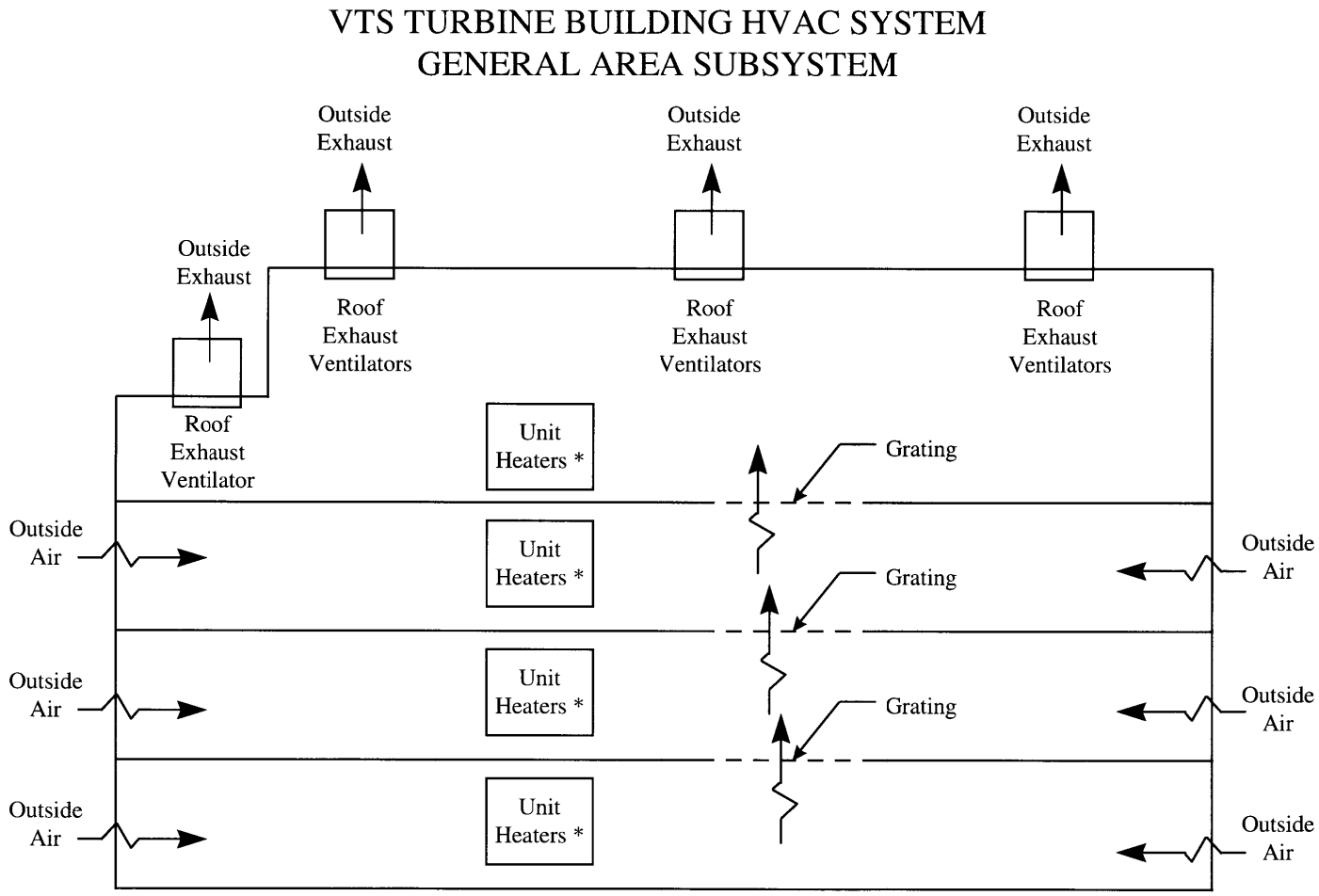

Figure 9.4.9-1
Turbine Building HVAC System
(REF) VTS 001

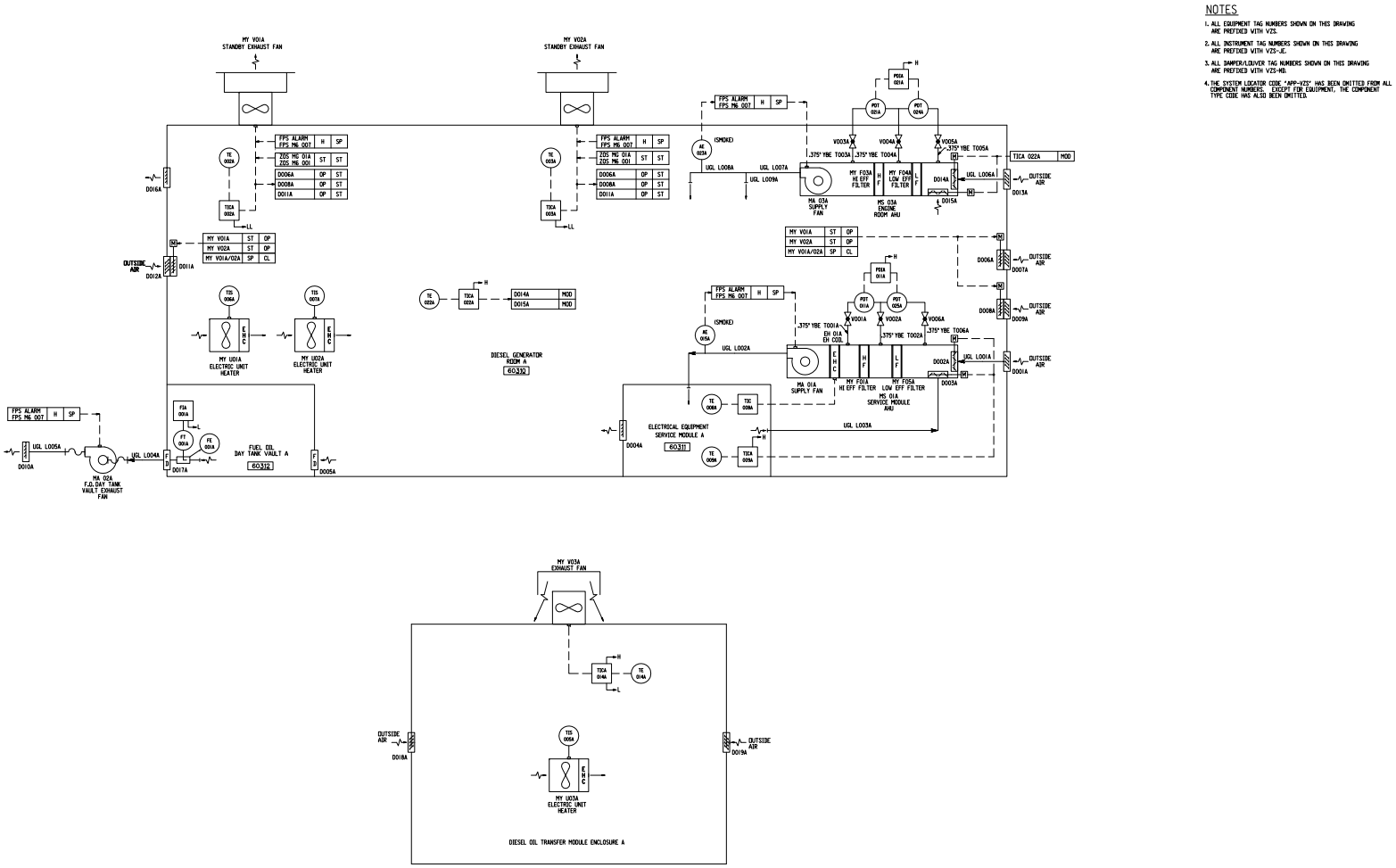

Figure represents system functional arrangement. Details internal to the system may differ as a result of implementation factors such as vendor-specific component requirements.

Figure 9.4.10-1 (Sheet 1 of 2)
Diesel Generator Building Heating and Ventilation System Piping and Instrumentation Diagram (REF) VZS 001

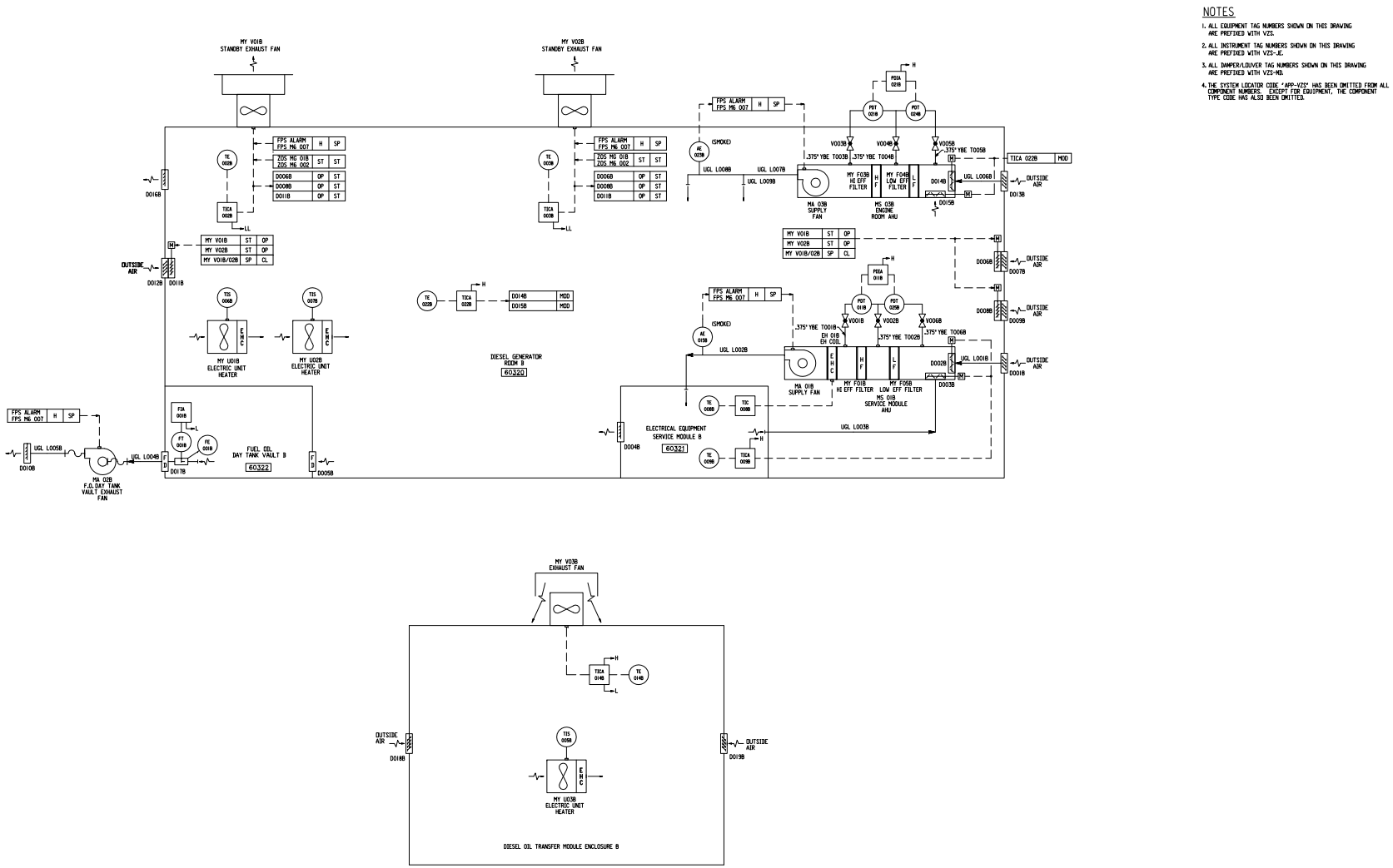

Figure 9.4.10-1 (Sheet 2 of 2)
Diesel Generator Building Heating and Ventilation System Piping and Instrumentation Diagram (REF) VZS 002

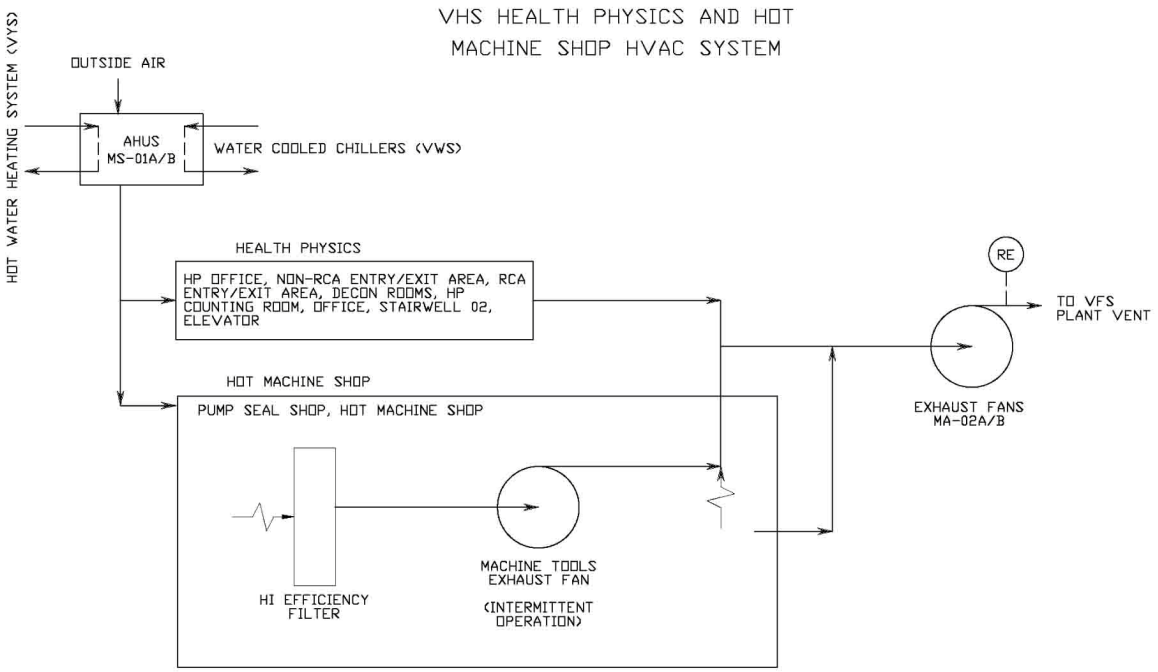

Figure 9.4.11-1
Health Physics and Hot Machine Shop HVAC System
(REF) VHS 001, 002, 003

9.5 Other Auxiliary Systems

9.5.1 Fire Protection System

The primary objectives of the AP1000 fire protection program are to prevent fires and to minimize the consequences should a fire occur. The program provides protection so that the plant can be shut down safely following a fire. The fire protection system (FPS) detects and suppresses fires, and is an integral part of the AP1000 fire protection program. The AP600 fire protection system was licensed as part of 10CFR52, Appendix C, AP600 Design Certification. Since AP1000 is very similar to AP600, the basis for the AP1000 fire protection system is that of AP600. The AP1000 compliance with BTP CMEB 9.5-1 is the same as for AP600.

9.5.1.1 Design Basis

9.5.1.1.1 Safety Design Basis

To achieve the required high degree of fire safety, and to satisfy fire protection objectives, the AP1000 is designed to:

- Prevent fire initiation by controlling, separating, and limiting the quantities of combustibles and sources of ignition
- Isolate combustible materials and limit the spread of fire by subdividing plant buildings into fire areas separated by fire barriers
- Separate redundant safe shutdown components and associated electrical divisions to preserve the capability to safely shut down the plant following a fire
- Provide the capability to safely shut down the plant using controls external to the main control room, should a fire require evacuation of the control room or damage the control room circuitry for safe shutdown systems
- Separate redundant trains of safety-related equipment used to mitigate the consequences of a design basis accident (but not required for safe shutdown following a fire) so that a fire within one train will not damage the redundant train
- Prevent smoke, hot gases, or fire suppressants from migrating from one fire area to another to the extent that they could adversely affect safe shutdown capabilities, including operator actions
- Provide confidence that failure or inadvertent operation of the fire protection system cannot prevent plant safety functions from being performed
- Preclude the loss of structural support, due to warping or distortion of building structural members caused by the heat from a fire, to the extent that such a failure could adversely affect safe shutdown capabilities
- Provide floor drains sized to remove expected firefighting water flow without flooding safety-related equipment
- Provide firefighting personnel access and life safety escape routes for each fire area
- Provide emergency lighting and communications to facilitate safe shutdown following a fire

- Minimize exposure to personnel and releases to the environment of radioactivity or hazardous chemicals as a result of a fire

The fire protection system is classified as a nonsafety-related, nonseismic system. Special seismic design requirements are applied to portions of the standpipe system located in areas containing equipment required for safe shutdown following a safe shutdown earthquake, as described in Subsection 9.5.1.2.1.5. In addition, the containment isolation valves and associated piping for the fire protection system are safety-related (Safety Class 2) and seismic Category I. The fire protection system is not required to remain functional following a plant accident or the most severe natural phenomena, except as indicated below for a safe shutdown earthquake.

The fire protection system is designed to perform the following functions:

- Detect and locate fires and provide operator indication of the location
- Provide the capability to extinguish fires in any plant area, to protect site personnel, limit fire damage, and enhance safe shutdown capabilities
- Supply fire suppression water at a flow rate and pressure sufficient to satisfy the demand of any automatic sprinkler system plus 500 gpm for fire hoses, for a minimum of 2 hours
- Maintain 100 percent of fire pump design capacity, assuming failure of the largest fire pump or the loss of offsite power
- Following a safe shutdown earthquake, provide water to hose stations for manual firefighting in areas containing safe shutdown equipment
- Satisfy the requirements of the passive containment cooling system as an alternate source of water to wet the containment dome or to refill the passive containment cooling water storage tank after a loss-of-coolant accident, if the fire protection system is available
- Provide an alternate supply of cooling water to the normal residual heat removal system heat exchanger after a loss of normal component cooling water system function.
- Provide nonsafety-related containment spray capability for severe accident management.

9.5.1.1.2 Power Generation Design Basis

AP1000 fire prevention, control, detection, and suppression features provide plant and personnel safety. The fire protection analysis (see Appendix 9A) evaluates the adequacy of fire protection for systems and plant areas important to the generation of electricity.

9.5.1.1.3 NonSafety-Related Containment Spray Function

The fire protection system provides a nonsafety-related containment spray function. This function is discussed in Subsection 6.5.2.

9.5.1.2 System Description

9.5.1.2.1 General Description

The fire protection program and the design of the fire protection system conform to the applicable codes and standards listed in Section 3.2, and the following:

- 10 CFR 50.48, Fire Protection (Reference 15)
- General Design Criterion 3, Fire Protection (Reference 16)
- SECY-93-087, Section I.E., Fire Protection (Reference 17)

Table 9.5.1-1 is a point-by-point description of the conformance of the fire protection program with the guidelines of Branch Technical Position (BTP) CMEB 9.5-1 (Reference 1). AP1000 meets the enhanced fire protection provisions of SECY93087 as demonstrated in the fire protection analysis (Appendix 9A).

The plant includes features to minimize the likelihood that a fire will occur and to limit the spread of fire.

The fire protection system detects fires and provides the capability to extinguish them using fixed automatic and manual suppression systems, manual hose streams, and/or portable firefighting equipment. The fire protection system consists of a number of fire detection and suppression subsystems, referred to as systems, including:

- Detection systems for early detection and notification of a fire
- A water supply system including the fire pumps, yard main, and interior distribution piping
- Fixed automatic fire suppression systems
- Manual fire suppression systems and equipment, including hydrants, standpipes, hose stations and portable fire extinguishers

The fire detection and suppression systems are described later in this subsection.

9.5.1.2.1.1 Plant Fire Prevention and Control Features

Architectural and Structural Features

Plant buildings use noncombustible structural materials, primarily reinforced concrete, gypsum, masonry block, structural steel, steel siding, and concrete/steel composite material. Fireproofing of structural steel is not normally required, but the effects of heat generated by a fire are considered in the design. Localized structural steel fireproofing is provided as required, based on a realistic analysis of the time-temperature fire effects on the structural members. Heat transfer analyses based on the postulated fire are used to determine whether the fire will heat the structural members to a specified critical temperature. Where structural failures could adversely affect safe shutdown capabilities, this analysis of the fire resistance of structural steel members establishes the need for fireproofing.

Firefighting personnel access routes and life safety escape routes are provided for each fire area. Fire exit routes are clearly marked.

Buildings outside primary containment generally have two enclosed stairways for emergency access. Stairwells serving as escape routes, access routes for firefighting, or access routes to areas containing equipment necessary for safe shutdown of the plant are equipped with emergency lighting. Such stairwells, and elevator shafts, which penetrate fire barrier floors, are enclosed in towers. The majority of the stairwell towers in the auxiliary building contain both concrete structural walls and nonstructural walls, consisting of a concrete/steel composite material having a fire resistance rating of at least 2 hours. The fire-resistance rating is based on material testing conducted in accordance with ASTM E-119 and NFPA 251. These auxiliary building stairwells are protected from potential missiles by other structures or by the selection of the location of the stairwell remote

from potential missile sources. Openings are protected with approved automatic or self-closing doors having a rating of 1.5 hours.

Some of the walls of the turbine building and annex building stairwell enclosures, which are exposed to the interior of the buildings, are also constructed with a concrete/steel composite material. However, the turbine building and annex building stairwell enclosure walls that face the yard area are constructed with an exterior siding common to the overall siding used for the turbine and annex buildings.

The main control room is designed to permit rapid detection and location of fires in the underfloor and ceiling spaces and allow ready access for manual firefighting. Due to the need to provide passive cooling capability into the main control room ceiling, it will not be protected against fires from within the main control room. The ceiling will be a fire barrier from fires in the room above the main control room.

Plant Arrangement

The plant is subdivided into fire areas to isolate potential fires and minimize the risk of the spread of fire and the resultant consequential damage from corrosive gases, fire suppression agents, smoke, and radioactive contamination.

Some fire areas are subdivided into fire zones to permit more precise identification of the type and locations of combustible materials, fire detection, and suppression systems. The subdivision into fire zones is based on the configuration of interior walls and floor slabs, and the location of major equipment within each fire area.

Fire barriers are provided in accordance with BTP CMEB 9.5-1. Three-hour fire barriers are non-combustible and surround fire areas containing safety-related components. The resistance of fire barriers in nonsafety-related areas of the plant may be less than 3 hours, where justified by the fire protection analysis (Appendix 9A).

Three-hour fire barriers provide complete separation of redundant safe shutdown components, including equipment, electrical cables, instrumentation and controls, except where the need for physical separation conflicts with other important requirements, specifically:

- Fire barrier separation is not provided within the main control room fire area because functional requirements make such separation impractical. The risk of fires in the control room is minimized by the reduction in the quantity of electrical cables. Continuous occupancy provides confidence that fires would be quickly detected and suppressed. Should a fire require evacuation of the main control room, the plant can be safely shut down using independent controls at the remote shutdown workstation, located in a separate fire area.

- Fire barrier separation is not provided between the main control room and the room above it from fires in the main control room. There are no safe shutdown components in the room above. There is fire barrier separation between the main control room and the room above it for fires in the room above.

- Fire barrier separation is not provided within the remote shutdown room fire area because the remote shutdown workstation is not required for safe shutdown unless a fire requires evacuation of the main control room.

- Complete fire barrier separation necessary to define a fire area is not provided throughout the primary containment fire area (including the middle and upper annulus zones of the shield building) because of the need to satisfy other design requirements, such as allowing for pressure equalization within the containment following a high-energy line break. Fire

protection features and equipment arrangement which define fire zones within the containment fire area provide confidence that at least one train of safe shutdown equipment will remain undamaged following a fire in any fire zone. The quantity of combustible materials is minimized. The use of sealless reactor coolant pump motors has eliminated the need for an oil lubrication system. Redundant trains of safe shutdown components are separated whenever possible by existing structural walls, or by distance. Selected cables of a safety-related division which pass through a fire zone of an unrelated division are protected by fire barriers. The fire protection system provides appropriate fire detection and suppression capabilities.

Outside of the primary containment and the main control room, the arrangement of plant equipment and routing of cable are such that safe shutdown can be achieved with all components (except those protected by 3-hour fire barriers) in any one fire area rendered inoperable by fire.

Openings and penetrations through fire barriers are protected in accordance with the guidelines of BTP CMEB 9.5-1.

Penetrations through the following barriers are rated to withstand a differential pressure of 5 psi to support the conclusions in Appendix 19F:

- Wall I between elevation 117’-6" to 153’-0"
- Wall 5 between elevation 100’-0" to 153’-0"
- Penetrations in the main control room floor (12401) at elevation 117’-6" above corridor 12300
- Penetrations through Wall I into corridor 12300
- Penetrations between Wall I and Wall I.1 into corridor 12300
- Penetrations on the inside of the shield building wall from room 12351
- Penetrations on the inside of the shield building wall from room 12421
- Penetrations on the inside of the shield building wall from room 12553
- Penetrations on the inside of the shield building wall from room 12556

The fire protection analysis contains a description of plant fire areas, fire zones, fire barriers, and the protection of fire barrier openings, as well as a description of the separation between redundant safe shutdown components.

Electrical Cable Design, Routing, and Separation

Electrical cable (including fiber optic cable) and methods of raceway construction are selected in accordance with BTP CMEB 9.5-1. Metal cable trays are used. Rigid metal conduit or metal raceways are used for cable runs not embedded in concrete or buried underground. Flexible metallic tubing is used in short lengths for equipment connections.

The insulating and jacketing material for electrical cables are selected to meet the fire and flame test requirements of IEEE Standard 1202 (Reference 18) or IEEE Standard 383 (Reference 3) excluding the option to use flame source, oil, or burlap.

The design, routing, and separation of cable and raceways are further described in Section 8.3.

Control of Combustible Materials

The plant is constructed of noncombustible materials to the extent practicable. The selection of construction materials and the control of combustible materials are in accordance with BTP CMEB 9.5-1 and Section 3.3 of NFPA 804 (Reference 2) as specified in WCAP-15871 (Reference 20).

The storage and use of hydrogen are according to NFPA 50A and NFPA 50B (Reference 2). Hydrogen lines in safety-related areas are designed to seismic Category I requirements.

Ventilation systems are designed to maintain the hydrogen concentration in the battery rooms well below 2 percent by volume, as described in Subsections 9.4.1 and 9.4.2.

The turbine lubrication oil system, located in the turbine building, is separated from areas containing safety-related equipment by 3-hour rated fire barriers.

Outdoor oil-filled transformers are separated from plant buildings according to NFPA 804 (Reference 2).

The diesel fuel oil storage tanks and the diesel fuel oil transfer pump enclosure are located in the yard area more than 50 feet from any safety-related structure. Potential oil spills from the storage tanks are confined by a diked enclosure. A diesel generator fuel day tank is located within each diesel generator room and is enclosed in a 3-hour fire rated barrier.

The diesel fuel supply for the ancillary diesel generators is in the same room as the diesel generators. The ancillary diesel generator room is separated from the rest of the annex building by a 3-hour rated fire barrier.

The diesel fuel supply for the diesel-driven fire pump is in the diesel-driven fire pump enclosure. The diesel pump enclosure is located in the yard more than 50 feet from safety-related structures. The enclosure includes a fire detector which produces an audible alarm locally with both visual and audible alarms in the main control room and security central alarm station. The fire is extinguished by operation of an automatic sprinkler system or manually, using hose streams or portable extinguishers.

Quantities and locations of other combustible materials are identified in the fire protection analysis (see Appendix 9A).

Control of Radioactive Materials

As described in the fire protection analysis, materials that collect or contain radioactivity, such as spent ion exchange resins and filters, are protected and stored in accordance with BTP CMEB 9.5-1.

9.5.1.2.1.2 Fire Detection and Alarm Systems

Fire detection and alarm systems are provided where required by the fire protection analysis, in accordance with BTP CMEB 9.5-1 and NFPA 72 (Reference 2). Fire detection and alarm systems are generally in accordance with NFPA 804 (Reference 2). See WCAP-15871 (Reference 20) for details.

Fire detectors respond to smoke, flame, heat, or the products of combustion. The installation of fire detectors is in accordance with NFPA 72 (Reference 2) and the manufacturer's recommendations. The selection and installation of fire detectors is also based on consideration of the type of hazard, combustible loading, the type of combustion products, and detector response characteristics. The types of detectors used in each fire area are identified in the fire protection analysis.

The fire detection system provides audible and visual alarms and system trouble annunciation in the main control room and the security central alarm station. Annunciation circuits connecting zone, main, and remote annunciation panels are electrically supervised.

Each fire detection, indicating, and alarm unit is provided with reliable ac electrical power from the non-Class 1E uninterruptible power supply system. This system is described in Subsection 8.3.2.1.2.

9.5.1.2.1.3 Fire Water Supply System

The fire water supply system is designed in accordance with BTP CMEB 9.5-1 and the applicable NFPA standards.

Fire water is supplied from two separate fresh water storage tanks. The primary fire water tank is dedicated to the fire protection system. The secondary fire water tank contains water for use by the fire protection system and the containment spray system. The water above the tank standpipe can be used as a gravity-fed alternate makeup source for the SWS cooling tower basin.

There are two 100-percent capacity fire pumps. The lead pump is electric motor-driven and the secondary pump is diesel engine-driven. A motor-driven jockey pump is used to keep the fire water system full of water and pressurized, as required. For additional information regarding the fire water tanks and pumps, see Subsection 9.5.1.2.3.

The fire water tanks are permanently connected to the fire pumps suction piping and are arranged so that the pumps can take suction from either or both tanks. Piping between the fire water sources and the fire pumps is in accordance with NFPA 20 (Reference 2). A failure in one tank or its piping cannot cause both tanks to drain.

Fire protection water is distributed by an underground yard main loop, designed in accordance with NFPA 24 (Reference 2). The yard main includes a building interior header that distributes water to suppression systems within the main plant buildings. Indicator valves provide sectionalized control and permit isolation of portions of the yard main for maintenance or repair. An indicator valve also separates the individual fire pump connections to the main.

Sprinkler and standpipe systems are supplied by connections from the yard main. Where plant areas, other than the containment and outlying buildings, are protected by both sprinkler systems and standpipe systems, the connections from the yard main are arranged so that a single active failure or a crack in a moderate energy line cannot impair both systems.

Manual valves for sectionalized control of the yard main or for shutoff of the water supply to suppression systems are electrically supervised if located above ground and administratively controlled if located underground.

Hydrants are provided on the yard main in accordance with NFPA 24 (Reference 2), at intervals of up to about 250 feet. They provide hose stream protection for every part of each building and two hose streams for every part of the interior of each building not covered by standpipe protection, excluding certain remote areas of the shield building. The lateral to each hydrant is controlled by an isolation valve.

Hose houses are in accordance with NFPA 24 (Reference 2). They are located at intervals of not more than 1000 feet along the yard main.

Outdoor fire water piping and water suppression systems located in unheated areas of the plant are protected from freezing.

A permanent connection between the fire protection system and the component cooling water system in the annex building is normally isolated by two valves in series.

A permanent connection between the fire protection system and the containment spray system in the containment is normally isolated by two valves in series.

Threads compatible with those used by the offsite fire department are provided on all hydrants, hose couplings and standpipe risers, or a sufficient number of thread adapters compatible with the offsite fire department are provided.

9.5.1.2.1.4 Automatic Fire Suppression Systems

Automatic fire suppression systems are in accordance with BTP CMEB 9.5-1 and the applicable NFPA standards, with consideration of the unique aspects of each application, including building characteristics, materials of construction, environmental conditions, fire area contents, and adjacent structures.

Fixed automatic fire suppression systems are provided based on the results of the fire protection analysis.

The selection of automatic suppression systems for each plant area is based on the guidance of NFPA 804 (Reference 2) as stated in WCAP-15871 (Reference 20). Water systems are preferred, but the use of automatic water suppression systems for firefighting in radiation areas is minimized because of the possible spread of contamination. Halon and carbon dioxide fixed flooding systems are not used.

The fire protection analysis describes the fire suppression systems provided for each fire area.

Automatic Water Suppression Systems

Automatic sprinkler and water spray systems are provided in accordance with the applicable requirements of NFPA 13 and NFPA 15 (Reference 2). Each system consists of overhead piping and components from a water supply valve to the point where water discharges from the system. Some systems have a control valve that is actuated automatically by the fire detection system. Each system has a status monitoring device for actuating an alarm when the system is in operation.

Preaction sprinkler systems are used where the leakage or inadvertent actuation of water-filled sprinkler systems could produce undesirable consequences, such as water discharge on equipment important to continued plant operation.

Each type of automatic sprinkler and automatic water spray system used on AP1000 is briefly described below:

- **Wet Pipe** - A sprinkler system employing closed (fusible link operated) sprinklers attached to a water-filled piping network. Water discharges immediately from those sprinklers where the heat from a fire is sufficient to melt the fusible link. System operation is terminated manually by shutting the water-supply valve.

- **Dry Pipe** - A sprinkler system employing closed sprinklers attached to a piping network containing pressurized air. Heat from a fire opens one or more sprinklers, releasing the air and permitting water supply pressure to open the dry pipe valve. Water flows into the piping network and discharges from the open sprinklers. System operation is terminated manually by shutting the water-supply valve.

- **Preaction** - A sprinkler system employing closed sprinklers attached to a dry piping network, with fire detector(s) installed in the same areas as the sprinklers. Operation of the fire detection system opens a preaction valve, which permits water to flow into the sprinkler piping network and to be discharged from any sprinklers that may have been opened by the fire. System operation is terminated manually by shutting the water-supply valve.

- **Deluge Sprinkler or Water Spray System** - A system employing open sprinklers or spray nozzles attached to a dry piping network, with fire detector(s) installed in the same areas as the sprinklers. Operation of the fire detection system opens a deluge valve, which permits water to flow into the sprinkler piping network and to be discharged from all the sprinklers or spray nozzles. System operation is terminated manually by shutting the water-supply valve.

9.5.1.2.1.5 Manual Fire Suppression Systems

Manual fire suppression capability is provided in areas that do not require an automatic suppression system. Plant areas that have an automatic suppression system also have manual backup fire suppression capability.

Manual fire suppression capabilities include the yard main fire hydrants and hose stations described in Subsection 9.5.1.2.1.3.

Standpipe and Hose Systems

Standpipe systems are provided for each building in accordance with NFPA 14 (Reference 2) requirements for Class III service. Wet standpipe systems are used except inside containment. Individual standpipes are at least 4 inches in diameter for multiple hose connections and 2.5 inches in diameter for single hose connections.

Hose stations are located to facilitate access for firefighting, as described in the fire protection analysis. Areas that contain, or could present a fire exposure event to, safety-related equipment are within reach of at least one effective hose stream. Alternative hose stations are provided for an area where the fire could block access to a single hose station serving that area. To the maximum extent practical, hose stations are located outside of high-radiation areas.

Each hose station has not more than 100 feet of 1.5-inch woven-jacket lined fire hose. Nozzles are provided at each station.

Seismic Standpipe System

The standpipe system serving areas containing equipment required for safe shutdown following a safe shutdown earthquake is designed and supported so that it can withstand the effects of a safe shutdown earthquake and remain functional. The seismically analyzed standpipe system is illustrated on Figure 9.5.1-1. This system also supplies water to automatic suppression systems inside containment and in the nonradiologically controlled portion of the auxiliary building (see Appendix 9A).

The seismic standpipe system is operated in the same manner during normal plant operation or following a safe shutdown earthquake. It is supplied with water from the safety related passive containment cooling system storage tank and normally operates independently of the rest of the fire protection system. The supply line draws water from a portion of the storage tank, using water allocated for fire protection. This volume of water is sufficient to supply two hose streams, each with a flow of 75 gallons per minute, for 2 hours.

The portion of the system outside containment is a wet standpipe system that is pressurized by the static head of water in the passive containment cooling system tank. The portion of the system inside

containment is a dry standpipe system. The supply valve is normally closed for containment isolation. During shutdown periods when the containment is occupied, when operation of containment automatic suppression systems is required, or when containment access is required to fight a fire, the valve is opened to pressurize the system.

In the unlikely event that the water supply from the passive containment cooling system is unavailable or additional water is needed, the seismic standpipe system can be supplied from the fire main by opening the normally closed cross-connect valve with the plant fire main.

A passive containment cooling ancillary water storage tank is provided to supply the seismic standpipe system following a safe shutdown earthquake and after actuation of the passive containment cooling system. The tank is designed and supported so that it can withstand the effects of a safe shutdown earthquake and remain functional. A dedicated portion of the storage capacity of the tank is sufficient to supply two hose streams, each with a flow of 75 gallons per minute, for 2 hours. Normally much more water is available. (Refer to Subsection 6.2.2 for additional information.)

A failure of the seismic standpipe system does not prevent successful operation of the passive containment cooling system. A leak in the standpipe system could result in the loss of only a limited amount of water from the passive containment cooling system storage tank, even if no action were taken to isolate the leak. The volume of water allocated for fire protection is not required for passive containment cooling.

Portable Fire Extinguishers

Portable fire extinguishers are provided throughout the plant. Portable extinguishers are readily accessible for use in high radiation areas but are not located within those areas unless the fire protection analysis indicates that a specific requirement exists.

9.5.1.2.2 System Operation

The fire protection system normally operates in an active standby mode. The fire water supply piping is kept full and pressurized by operation of the jockey pump. Shutoff valves controlling fire suppression systems are normally aligned in the open position. Fire detection and alarm circuits are normally energized and monitored for trouble or loss of power as described in Subsection 9.5.1.2.1.2.

When a fire is detected, the fire detection system produces an audible alarm locally, and both visual and audible alarms in the main control room and security central alarm station.

Where the fire area is protected by an automatic suppression system, operation of the suppression system begins as described in Subsection 9.5.1.2.1.4. Where the fire area is protected by manual suppression methods, the fire brigade reacts to control and extinguish the fire.

Ventilation system fire dampers close automatically against full airflow on high temperature to control the spread of fire and combustion products. Fire dampers serving certain safety-related, smoke-sensitive areas are also closed in response to an initiation signal from the fire detection system. Smoke is removed from the fire area as described in the fire protection analysis.

When water pressure in the yard main begins to fall, due to a demand for water from automatic or manual suppression systems, the motor-driven pump starts automatically on a low-pressure signal. If the motor-driven pump fails to start, the diesel-driven pump starts upon a lower pressure signal. The pump continues to run until it is stopped manually.

Firefighting activities continue until the fire is extinguished. Suppression systems are stopped manually. Operator actions are taken to repair and restore affected detection, alarm, and suppression systems to standby status.

9.5.1.2.3 Component Description

Selected fire protection system components are described below. Table 9.5.1-2 contains additional component data for fire protection equipment.

Fire Water Storage Tanks

Two separate fresh water storage tanks are provided for fire protection in accordance with NFPA 22 (Reference 2). The storage capacity of each tank is sufficient to maintain the design fire pump flow rate for at least 2 hours. Either tank can be automatically refilled from the raw water system within 8 hours. Freeze protection is provided as needed using electric immersion heaters.

Passive Containment Cooling Ancillary Water Storage Tank

See Subsection 6.2.2.2.3 for a description of this component.

Fire Pumps

Two 100-percent capacity fire pumps are provided in accordance with NFPA 20 (Reference 2). Each pump is rated for 2000 gpm. The lead pump is electric motor-driven and the second pump is diesel engine-driven. The pumps and their controllers are UL-listed. Fire pump status alarms are provided in the main control room.

The motor-driven fire pump is supplied with power from the turbine building 480 Vac non-Class 1E switchgear. The fuel tank for the diesel-driven pump holds enough fuel to operate the pump for at least 8 hours.

Valves

Valves used in the fire protection system are of an approved type for fire protection service. See the Fire Protection Handbook (Reference 4) for typical descriptions of these valves.

Fire Detectors

The types of fire detectors used in specific applications are identified in the fire protection analysis. See Reference 4 for descriptions of these fire detectors and their principles of operation.

9.5.1.3 Safety Evaluation (Fire Protection Analysis)

The fire protection analysis evaluates the potential for occurrence of fires within the plant and describes how fires are detected and suppressed. It also confirms that the plant can be safely shut down following a postulated fire. The fire protection analysis is in Appendix 9A.

The fire protection analysis includes a set of fire area drawings and a discussion of the analysis methodology. It also provides the following information for each fire area in the plant:

- A description of the fire area and its fire barriers, its associated fire zones, as well as fire detection and suppression capabilities
- Identification of the type, quantity, and location of in-situ and anticipated transient combustible materials, and combustible loading
- A listing of safety-related mechanical and electrical equipment

- Fire severity category and equivalent duration
- An evaluation of fire protection system adequacy and the consequences of a fire, including a discussion of the control and removal of smoke and hot gases, and drainage system adequacy.

For fire areas containing safety-related structures, systems, and components the following information is also provided:

- An evaluation of fire protection system integrity. This includes a determination of whether the credible failure of a fire protection system component could cause inadvertent operation of an automatic fire suppression system in the fire area, and the resulting consequences. Also included is verification that no potential single impairment of the fire protection system could incapacitate both the automatic suppression system and the backup manual suppression system (generally a hose station), for fire areas where both types of suppression systems are provided.
- A safe shutdown evaluation confirming the capability to safely shut down the reactor and maintain it in a safe shutdown condition following a fire

The safe shutdown evaluation is based upon all components in a single fire area outside containment or any fire zone inside containment being disabled by the fire. Success is based upon the plant being able to achieve safe shutdown as discussed in Section 7.4. Safe shutdown is a safe, stable condition that can be maintained indefinitely with the reactor subcritical and reactor coolant pressure at a small fraction of its design pressure. As described in Section 7.4.1.1, safety-related systems achieve this condition automatically using reliable, passive processes. The passive residual heat removal heat exchanger transfers heat to the in-containment refueling water storage tank. Steam from this tank enters the containment which is cooled by the passive containment cooling system. These systems reduce the reactor temperature and pressure to less than 420°F and 600 psia in 36 hours. See Appendix 19E for additional details about the shutdown evaluation. This is a safe and acceptable end state which is used to show compliance with BTP 9.5-1. The safe shutdown fire evaluation in Appendix 9A shows that there is sufficient safety-related equipment available after a fire which destroys a single fire area outside containment or any fire zone inside containment, to bring the plant to this safe shutdown condition.

It should be noted that following most fires, that nonsafety-related systems are expected to be available to bring the plant to a cold shutdown for repairs. These systems are defense in depth systems with redundant active components. These systems are expected to be available because of the use of redundant equipment and fire protection features, including separation or automatic fire suppression.

Table 9.5.1-4 lists the system capabilities that are expected to be available following a fire to bring the plant to a cold shutdown. This list does not contain the nonsafety-related support systems that are not necessary to operate following a fire. For example, chilled water cooling and non-1E instrumentation are not required following a fire. Heating and ventilation are not required except for the annex/auxiliary non-radioactive ventilation system AHUs used to ventilate the non-1E switchgear rooms. The following safety-related capabilities are used together with these nonsafety-related capabilities to achieve cold shutdown:

- Insertion of control rods to provide reactor shutdown,
- Instrumentation to monitor reactor coolant system conditions,

- Operation of one core makeup tank in a natural circulation mode to provide reactor coolant makeup and boration in case the chemical and volume control system makeup is unavailable due to a fire,

- Manual partial opening (and closing) of one first stage automatic depressurization valve to provide a controlled, limited depressurization of the reactor coolant system to allow initiation of the normal residual heat removal system in case the chemical and volume control system auxiliary spray is unavailable due to a fire.

The use of these safety-related capabilities does not result in significant plant transients. The reactor coolant system pressure boundary is maintained and containment pressure and temperature conditions are not affected by the use of these safety-related capabilities.

If a less likely, more severe fire occurs, these systems are expected to be recovered after reasonable actions are taken to utilize temporary connections or to perform repairs (see Subsections 9.2.2.4.5.5 and 9.5.1.1.1). Recovery of these systems allows the plant to be brought to a cold shutdown for plant repairs. No credit is taken in the Appendix 9A fire evaluation for nonsafety-related systems. As a result, fire separation is not required for these systems.

9.5.1.4 Testing and Inspection

The fire pumps are initially tested by the manufacturer in accordance with NFPA 20 (Reference 2) to verify pressure integrity and performance.

Preoperational testing is in accordance with the Initial Test Program (Chapter 14).

9.5.1.5 Instrumentation Applications

Pressure sensors start the fire pumps on decreasing fire main water pressure. Pressure indicators confirm adequate pressures for automatic and manual suppression systems. Valve position sensors are used to monitor the positions of water supply valves.

Temperature instrumentation is used to monitor fire water storage tank temperature. Level instrumentation is used to monitor levels in the fire water storage tanks and the diesel-driven fire pump fuel storage tank.

9.5.1.6 Personnel Qualification and Training

Preparation and review of the fire protection analysis, and design and selection of fire protection equipment, is performed by fire protection and nuclear safety systems engineers.

The qualification requirements for individuals responsible for development of the fire protection program, training of firefighting personnel, as well as associated administrative procedures are discussed in Subsection 9.5.1.8.1.

Subsections 9.5.1.8.2 and 9.5.1.8.7 summarize the qualification and training programs that are established and implemented for the Fire Protection Program.

9.5.1.7 Quality Assurance

Quality assurance controls are applied to the activities involved in the design, procurement, installation, testing, and maintenance of fire protection systems for safety-related areas, in accordance with the programs outlined in Chapter 17.

9.5.1.8 Fire Protection Program

The fire protection program is established such that a fire does not prevent safe shutdown of the plant and does not endanger the health and safety of the public. Fire protection at the plant uses a defense-in-depth concept that includes fire prevention, detection, control and extinguishing systems and equipment, administrative controls and procedures, and trained personnel. These defense-in-depth principles are achieved by meeting the following objectives:

- Prevent fires from starting.
- Detect rapidly, control, and extinguish promptly those fires that do occur.
- Provide protection for structures, systems, and components important to safety so that a fire that is not promptly extinguished by the fire suppression activities does not prevent the safe shutdown of the plant.
- Minimize the potential for radiological releases.

9.5.1.8.1 Fire Protection Program Implementation

As indicated in Table 13.4-201, the required elements of the fire protection program are fully operational prior to receipt of new fuel for buildings storing new fuel and adjacent fire areas that could affect the fuel storage area in that reactor unit. Other required elements of the fire protection program described in this section are fully operational prior to initial fuel loading in that reactor unit.

Elements of the fire protection program are reviewed on a frequency established by procedures and updated as necessary.

9.5.1.8.1.1 Fire Protection Program Criteria

The fire protection program is based on the criteria of several industry and regulatory documents referenced in Subsection 9.5.5, and also based on the guidance provided in Regulatory Guide 1.189. Table 9.5.1-1 provides a cross-reference to information addressing compliance with BTP CMEB 9.5-1. Exceptions to the National Fire Protection Association (NFPA) Standards beyond those included in Table 9.5.1-3, and exceptions taken to the NFPA Standards listed in Subsection 9.5.5, are identified in Table 9.5.1-3.

9.5.1.8.1.2 Organization and Responsibilities

The organizational structure of the fire protection personnel is discussed in Subsection 13.1.1.2.10.

The site executive in charge of the fire protection program, through the engineer in charge of fire protection, is responsible for the following:

a. Programs and periodic inspections are implemented to:

   1. Minimize the amount of combustibles in safety-related areas.

   2. Determine the effectiveness of housekeeping practices.

   3. Provide for availability and acceptability of the following:

      (i) Fire protection system and components.

(ii) Manual firefighting equipment.

(iii) Emergency breathing apparatus.

(iv) Emergency lighting.

(v) Portable communication equipment.

(vi) Fire barriers including fire rated walls, floors and ceilings, fire rated doors, dampers, etc., fire stops and wraps, and fire retardant coating. Procedures address the administrative controls in place, including fire watches, when a fire area is breached for maintenance.

4. Confirm prompt and effective corrective actions are taken to correct conditions adverse to fire protection and preclude their recurrence.

b. Conducting periodic maintenance and testing of fire protection systems, components, and manual firefighting equipment, evaluating test results, and determining the acceptability of systems under test in accordance with established plant procedures.

c. Designing and selecting equipment related to fire protection.

d. Reviewing and evaluating proposed work activities to identify potential transient fire loads.

e. Managing the plant fire brigade, including:

1. Developing, implementing, and administering the fire brigade training program.

2. Scheduling and conducting fire brigade drills.

3. Critiquing fire drills to determine if training objectives are met.

4. Performing a periodic review of the fire brigade roster and initiating changes as needed.

5. Maintaining the fire training program records for members of the fire brigade and other personnel.

6. Maintaining a sufficient number of qualified fire brigade personnel to respond to fire emergencies for each shift.

f. Developing and conducting the fire extinguisher training program.

g. Implementing a program for indoctrination of personnel gaining unescorted access to the protected area in appropriate procedures which implement the fire protection program, such as fire prevention and fire reporting procedures, plant emergency alarms, including evacuation.

h. Implementing a program for instruction of personnel on the proper handling of accidental events such as leaks or spills of flammable materials.

i. Preparing procedures to meet possible fire situations in the plant and for ensuring assistance is available for fighting fires in radiological areas.

j. Implementing a program that uses a permit system that controls and documents inoperability of fire protection systems and equipment. This program initiates proper notifications and compensatory actions, such as fire watches, when inoperability of any fire protection system or component is identified.

k. Developing and implementing preventive maintenance, corrective maintenance, and surveillance test fire protection procedures.

l. Confirming that plant modifications, new procedures and revisions to procedures associated with fire protection equipment and systems that have significant impact on the fire protection program, are reviewed by an individual who possesses the qualifications of a fire protection engineer.

m. Continuing evaluation of fire hazards during construction or modification of other units on the site. Special considerations, such as fire barriers, fire protection capability, and administrative controls are provided as necessary to protect the operating unit(s) from construction or modification activities.

n. Establishing a fire prevention surveillance plan and training plant personnel on that plan.

o. Developing prefire plans and making them available to the fire brigade and control room.

The responsibilities of the engineer in charge of fire protection and his staff are discussed in Subsection 13.1.2.1.3.9.

9.5.1.8.2 Fire Brigade

9.5.1.8.2.1 General

The organization of the fire brigade is discussed in Subsection 13.1.2.1.6.

To qualify as a member of the fire brigade, an individual must meet the following criteria:

a. Has attended the required training sessions for the position occupied on the fire brigade.

b. Has passed an annual physical exam including demonstrating the ability for performing strenuous activity and the use of respiratory protection.

9.5.1.8.2.2 Fire Brigade Training

A training program is established so that the capability to fight fires is developed and documented. The program consists of classroom instruction supplemented with periodic classroom retraining, practice in firefighting, and fire drills. Classroom instruction and training is conducted by qualified individuals knowledgeable in fighting the types of fires that could occur within the plant and its environs and using onsite firefighting equipment. Individual records of training provided to each fire brigade member, including drill critiques, are maintained as part of the permanent plant files for at least three years to document that each member receives the required training.

The fire brigade leader and at least two brigade members per shift have sufficient training and knowledge of plant safety-related systems to understand the effects of fire and fire suppressants on safe shutdown capability. The brigade leader is competent to assess the potential safety consequences of a fire and advise control room personnel. Such competence by the brigade leader may be evidenced by possession of an operator's license or equivalent knowledge of plant systems.

Personnel assigned as fire brigade members receive formal training prior to assuming brigade duties. The course subject matter is selected to satisfy the requirements of Regulatory Guide 1.189. Course material selection also includes guidance from NFPA 600 (Reference 204) and 1500 (Reference 210) as appropriate. Additional training may also include material selected from NFPA 1404 (Reference 208) and 1410 (Reference 209).

The minimum equipment provided for the fire brigade consists of personal protective equipment such as turnout coats, boots, gloves, hard hats, emergency communications equipment, portable lights, portable ventilation equipment, and portable extinguishers. Self-contained breathing apparatus (SCBA) approved by NIOSH, using full face positive pressure masks, and providing an operating life of at least 30 minutes, are provided for selected fire brigade, emergency repair, and control room personnel. At least ten masks are provided for fire brigade personnel. At least two extra air bottles, each with at least 30 minutes of operating life, are located on site for each SCBA. An additional onsite 6-hour supply of reserve air is provided to permit quick and complete replenishment of exhausted supply air bottles. Subsection 6.4.2.3 discusses the portable breathing apparatus for control room personnel. Additional SCBAs are provided near the personnel containment entrance for the exclusive use of the fire brigade. The fire brigade leader has ready access to keys for any locked fire doors.

The on-duty shift manager has responsibility for taking certain actions based on an assessment of the magnitude of the fire emergency. These actions include safely shutting down the plant, making recommendations for implementing the Emergency Plan, notification of emergency personnel, and requesting assistance from off-duty personnel, if necessary. Emergency Plan consideration of fire emergencies includes the guidance of Regulatory Guide 1.101.

9.5.1.8.2.2.1 Classroom Instruction

Fire brigade members receive classroom instruction in fire protection and firefighting techniques prior to qualifying as members of the fire brigade. This instruction includes:

a. Identification of the types of fire hazards along with their location within the plant and its environs.

b. Identification of the types of fires that could occur within the plant and its environs.

c. Identification of the location of onsite fire fighting equipment and familiarization with the layout of the plant including ingress and egress routes to each area.

d. The proper use of onsite fire fighting equipment and the correct method of fighting various types of fires including at least the following:

   – fires involving radioactive materials

   – fires in energized electrical equipment

   – fires in cables and cable trays

   – fires involving hydrogen

   – fires involving flammable and combustible liquids or hazardous process chemicals

   – fires resulting from construction or modifications (welding)

   – fires involving record files.

e. Review of each individual's responsibilities under the Fire Protection Program.

f. Proper use of communication, lighting, ventilation, and emergency breathing equipment.

g. Fire brigade leader direction and coordination of firefighting activities.

h. Toxic and radiological characteristics of expected combustion products.

i. Proper methods of fighting fires inside buildings and confined spaces.

j. Detailed review of firefighting strategies, procedures and procedure changes.

k. Indoctrination of the plant firefighting plans, identification of each individual's responsibilities, and review of changes in the firefighting plans resulting from fire protection-related plant modifications.

l. Coordination between the fire brigade and offsite fire departments that have agreed to assist during a major fire onsite is provided to establish responsibilities and duties. Educating the offsite organization in operational precautions when fighting fires on nuclear power plant sites, and awareness of special hazards and the need of radiological protection of personnel.

9.5.1.8.2.2.2 Retraining

Classroom refresher training is scheduled on a biennial basis to supplement retention of the initial training. These sessions may be concurrent with the regular planned meetings.

9.5.1.8.2.2.3 Practice

Practice sessions are held for each fire brigade and for each fire brigade member on the proper method of fighting various types of fires which might occur in the plant. These sessions are scheduled on an annual basis and provide brigade members with team experience in actual fire fighting and the use of emergency breathing apparatus under strenuous conditions encountered in fire fighting.

9.5.1.8.2.2.4 Drills

Fire brigade drills are conducted at least once per calendar quarter for each shift. Each fire brigade member participates in at least two drills annually. Drills are either announced or unannounced. At least one unannounced drill is held annually for each shift fire brigade. At least one drill is performed annually on a "back shift" for each shift's fire brigade. The drills provide for offsite fire department participation at least annually. Triennially, a randomly selected, unannounced drill shall be conducted and critiqued by qualified individuals independent of the plant staff. Training objectives are established prior to each drill and reviewed by plant management. Drills are critiqued on the following points:

a. Assessment of fire alarm effectiveness.

b. Assessment of time required to notify and assemble the fire brigade.

c. Assessment of the selection, placement, and use of equipment.

d. Assessment of the fire brigade leader's effectiveness in directing the firefighting effort.

e. Assessment of each fire brigade member's knowledge of firefighting strategy, procedures, and simulated use of equipment.

f. Assessment of the fire brigade's performance as a team.

Performance deficiencies identified, based on these assessments, are used as the basis for additional training and repeat drills. Unsatisfactory drill performance is followed by a repeat drill within 30 days.

9.5.1.8.2.2.5 Meetings

Regular planned meetings are held at least quarterly for the fire brigade members to review changes in the Fire Protection Program and other subjects as necessary.

9.5.1.8.3 Administrative Controls

Administrative controls for the Fire Protection Program are implemented through plant administrative procedures. Applicable industry publications are used as guidance in developing those procedures.

Administrative controls include procedures to:

a. Control actions to be taken by an individual discovering a fire, such as notification of the control room, attempting to extinguish the fire, and actuation of local fire suppression systems.

b. Control actions to be taken by the control room operator, such as sounding fire alarms, and notifying the shift manager of the type, size, and location of the fire.

c. Control actions to be taken by the fire brigade after notification of a fire, including location to assemble, directions given by the fire brigade leader, the responsibilities of brigade members, such as selection of firefighting and protective equipment, and use of preplanned strategies for fighting fires in specific areas.

d. Control actions to be taken by the security force upon notification of a fire.

e. Define the strategies established for fighting fires in safety-related areas and areas presenting a hazard to safety-related equipment, including the designation of the:

    1. Fire hazards in each plant area/zone covered by a firefighting procedure (prefire plan). Prefire plans use the guidance of NFPA 1620 (Reference 205).

    2. Fire extinguishers best suited for controlling fires with the combustible loadings of each zone and the nearest location of these extinguishers.

    3. Most favorable direction from which to attack a fire in each area in view of the ventilation direction, access hallways, stairs, and doors that are most likely to be free of fire, and the best station or elevation for fighting the fire. Access and egress routes that involve locked doors are specifically identified in the procedure with the appropriate precautions and methods for access specified.

    4. Plant systems that should be managed to reduce the damage potential during a local fire and the location of local and remote controls for such management (e.g., any hydraulic or electrical system in the zone covered by the specific firefighting procedure that could increase the hazards in the area because of overpressurization or electrical hazards).

5. Vital heat-sensitive system components that need to be kept cool while fighting a local fire. Particularly hazardous combustibles that need cooling are designated.

6. Potential radiological and toxic hazards in fire zones.

7. Ventilation system operation that provides desired plant air distribution when the ventilation flow is modified for fire containment or smoke clearing operations.

8. Operations requiring control room and shift manager coordination or authorization.

9. Instructions for plant operators and other plant personnel during a fire.

f. Organize the fire brigade and assign special duties according to job title so that the firefighting functions are covered for each shift by personnel trained and qualified to perform these functions. These duties include command control of the brigade, transporting fire suppression, and support equipment to the fire scenes, applying the extinguishing agent to the fire, communication with the control room, and coordination with offsite fire departments.

9.5.1.8.4 Control of Combustible Materials, Hazardous Materials, and Ignition Sources

The control of combustible materials is defined by administrative procedures. These procedures impose the following controls:

a. Prohibit the storage of combustible materials (including unused ion exchange resins) in areas that contain or expose safety-related equipment.

b. Govern the handling of and limit transient fire loads such as flammable liquids, wood, and plastic materials in buildings containing safety-related systems or equipment.

c. Assign responsibility to the appropriate supervisor for reviewing work activities to identify transient fire loads.

d. Govern the use of ignition sources by use of a flame permit system to control welding, flame cutting, grinding, brazing and soldering operations, and temporary electrical power cables. A separate permit is issued for each area where such work is done. If work continues over more than one shift, the permit is valid for not more than 24 hours when the plant is operating or for the duration of a particular job during plant shutdown. NFPA 51B (Reference 202) and 241 (Reference 203) are used as guidance.

e. Minimize waste, debris, scrap, and oil spills or other combustibles resulting from a work activity in the safety-related area while work is in progress, and remove the same upon completion of the activity or at the end of each work shift.

f. Govern periodic inspections for accumulation of combustibles for continued compliance with these administrative controls.

g. Prohibit the storage of acetylene-oxygen and other compressed gasses in areas that contain or expose safety-related equipment or the fire protection system that serves those areas. A permit system is required to control the use of this equipment in safety-related areas of the plant.

h. Govern the use and storage of hazardous chemicals in areas that contain or expose safety-related equipment.

i. Control the use of specific combustibles in safety-related areas. Wood used in safety-related areas during maintenance, modification, or refueling operation (such as lay-down blocks or scaffolding) is treated with a flame retardant in accordance with NFPA 703 (Reference 207). Use of wood inside buildings containing systems or equipment important to safety is only permitted when suitable noncombustible substitutes are not available. Equipment or supplies (such as new fuel) shipped in untreated combustible packing containers are unpacked in safety-related areas if required for valid operating reasons. However, combustible materials are removed from the area immediately following unpacking. Such transient combustible material, unless stored in approved containers, is not left unattended during lunch breaks, shift changes, or other similar periods. Loose combustible packing material, such as wood or paper excelsior, or polyethylene sheeting, is placed in metal containers with tight-fitting self-closing metal covers. Only noncombustible panels or flame-retardant tarpaulins or approved materials of equivalent fire-retardant characteristics are used. Any other fabrics or plastic films used are certified to conform to the large-scale fire test described in NFPA 701 (Reference 206).

j. Govern the control of electrical appliances in areas that contain or expose safety-related equipment.

9.5.1.8.5 Control of Radioactive Materials

The plant is designed with provisions for sampling of liquids resulting from fire emergencies that may contain radioactivity and may be released to the environment. Plant operating procedures require such liquids to be collected, sampled, and analyzed prior to discharge. Liquid discharges are required to be below activity limits prior to discharge.

9.5.1.8.6 Testing and Inspection

Testing and inspection requirements are imposed through administrative procedures. Maintenance or modifications to the fire protection system are subject to inspection for conformation to design requirements. Procedures governing the inspection, testing, and maintenance of fire protection alarm and detection systems, and water-based suppression and supply systems, use the guidance of NFPA 72 (Subsection 9.5.5, Reference 2) and NFPA 25 (Reference 212). Installation of portions of the system where performance cannot be verified through preoperational tests, such as penetration seals, fire-retardant coatings, cable routing, and fire barriers are inspected. Inspections are performed by individuals knowledgeable of fire protection design and installation requirements. Open flame or combustion-generated smoke is not used for leak testing or similar procedures such as air flow determination. Inspection and testing procedures address the identification of items to be tested or inspected, responsible organizations for the activity, acceptance criteria, documentation requirements and sign-off requirements.

Fire protection materials subject to degradation (such as fire stops, seals, and fire retardant coatings are visually inspected periodically for degradation or damage. Fire hoses are hydrostatically tested in accordance with NFPA 1962 (Reference 201). Hoses stored in outside hose stations are tested annually and interior standpipe hoses are tested every three years.

The fire protection system is periodically tested in accordance with plant procedures. Testing includes periodic operational tests and visual verification of damper and valve positions. Fire doors and their closing and latching mechanisms are also included in these procedures.

The preoperational testing program describes the procedures for confirming that the as-installed configuration of fire barriers matches the tested configurations. The procedures describe the process for identifying and dispositioning deviations.

9.5.1.8.7 Personnel Qualification and Training

The engineer in charge of fire protection is responsible for the formulation and implementation of the fire protection program and meets the qualification requirements listed in Subsection 13.1.2.1.3.9.

Qualification and training of other plant personnel involved in the fire protection program is governed by plant qualification procedures and is conducted by personnel qualified by training and experience in these areas. These classifications include training personnel, maintenance personnel assigned to work on the fire protection system, and operations personnel assigned to system operation and testing.

9.5.1.8.8 Fire Doors

Fire doors separating safety-related areas are self-closing or provided with closing mechanisms and are inspected semiannually to verify that the automatic hold open, release and closing mechanisms and latches are operable. Watertight and missile resistant doors are not provided with closing mechanisms. Fire doors with automatic hold open and release mechanisms are inspected daily to verify that the doorways are free of obstructions.

Fire doors separating safety-related areas are normally closed and latched. Fire doors that are locked closed are inspected weekly to verify position. Fire doors that are closed and latched are inspected daily to ensure that they are in the closed position. Fire doors that are closed and electrically supervised at a continuously manned location are not inspected.

9.5.1.8.9 Emergency Planning

Emergency planning is described in Section 13.3.

9.5.1.9 Combined License Information

9.5.1.9.1 The qualification requirements for individuals responsible for development of the fire protection program, training of firefighting personnel, administrative procedures and controls governing the fire protection program during plant operation, and fire protection system maintenance are addressed as follows:

Qualification requirements for individuals responsible for development of the Fire Protection Program are discussed in Subsections 9.5.1.6 and 9.5.1.8.7.

Training of firefighting personnel is discussed in Subsections 9.5.1.8, 9.5.1.8.2, and 9.5.1.8.7.

Administrative procedures and controls governing the Fire Protection Program during plant operation are discussed in Subsections 9.5.1.8.1.2, 9.5.1.8.3, 9.5.1.8.4, 9.5.1.8.5, and 9.5.1.8.6.

Fire protection system maintenance is discussed in Subsection 9.5.1.8.6.

9.5.1.9.2 The site-specific fire protection analysis information for the yard area, the administration building, and for other outlying buildings consistent with Appendix 9A is addressed in Subsection 9A.3.3.

9.5.1.9.3 The BTP CMEB 9.5-1 issues identified in Table 9.5.1-1 by the acronym "WA" are addressed in Subsections 9.5.1.8.1.1, 9.5.1.8.8, and 9.5.1.8.9 and in Table 9.5.1-1.

9.5.1.9.4 The plant-specific NFPA exceptions are addressed in Subsection 9.5.1.8.1.1.

9.5.1.9.5 The operator actions which minimize the probability of the potential for spurious ADS actuation as a result of a fire are addressed in APP-GW-GLR-027 (Reference 22).

9.5.1.9.6 The process for identifying deviations between the as-built installation of fire barriers and their tested configurations is addressed in Subsection 9.5.1.8.6.

9.5.1.9.7 The procedures to minimize risk when fire areas are breached during maintenance are addressed in Subsection 9.5.1.8.1.2.

9.5.1.9.8 The fire resistance test data in accordance with ASTM E-119 and NFPA 251 for the composite material selected for stairwell fire barriers is addressed in APP-GW-GLR-019 (Reference 23).

9.5.2 Communication System

The communication system (EFS) provides effective intraplant communications and effective plant-to-offsite communications during normal, maintenance, transient, fire, and accident conditions, including loss of offsite power. The communication system consists of the following subsystems:

- Wireless telephone system
- Telephone/page system
- Private automatic branch exchange (PABX) system
- Sound-powered system
- Emergency offsite communications
- Security communication system.

The communication system allows each guard, watchman, or armed response individual on duty to maintain continuous communication with an individual in each manned alarm station and with other agencies both onsite and offsite, as required by 10 CFR 73, Sections 55 (e) and (f) (Reference 13). This is accomplished by both the PABX system and the wireless communication system. Each system can provide these communication functions.

Communication equipment used with respiratory protection devices will be designed and selected in accordance with EPRI NP-6559 (Reference 8).

9.5.2.1 Design Basis

The communication system serves no safety-related function and therefore has no nuclear safety design basis.

The communication subsystems are independent of one another; therefore, a failure in one subsystem does not degrade performance of the other subsystems.

The communication system is in accordance with applicable codes and standards minimizing electromagnetic interference and its potential effects to equipment. "Low-powered" type equipment is used, where possible, which has been demonstrated to have a limited potential for causing interference with electronic equipment (Reference 8) (EPRI NP-6559, Section 5). Communication equipment is shielded, as necessary, from the detrimental effects of electromagnetic interference.

9.5.2.2 System Description

9.5.2.2.1 Wireless Telephone System

The wireless telephone system consists of wireless belt-clip portable handsets, hands-free type portable headsets, a comprehensive antenna system, and a wireless telephone switch. The wireless telephone system is the primary means of communication for plant operations and maintenance personnel. The telephone-page, PABX telephone, and sound-powered communication systems are for general plant communications and serve as a backup to the wireless system.

The wireless telephone system has the ability to dial fixed PABX telephone stations and vice versa. The wireless system has the capability to access the page circuit of the telephone-page system and the capability to access offsite emergency communication links.

Normal 120-V ac power supplies the wireless telephone switch. Upon loss of the normal power, the switch is powered from the non-Class 1E dc and uninterruptible power supply system and supplies power for system operation for 120 minutes.

9.5.2.2.2 Telephone/Page System

The telephone/page system consists of handsets, amplifiers, loudspeakers, siren tone generators, a centralized test and distribution cabinet, and associated equipment. The system consists of one paging line and five party lines. The lines are independent of one another without crosstalk or interference. One party line is designed for communication between zones. Communication is established by selecting the same clear party line at each desired station using the party line selector switch provided with each unit and then talking into the handset. Intrazone announcements are made by pushing the paging button and speaking into the handset microphone at the handset station. Interzone announcements are made by first merging the required zones and then pushing the paging button and speaking into the handset microphone at the handset station. Remote zone merging control units are provided at the main control room, the security central alarm station, and the security secondary alarm station.

A fivetone siren generator annunciates alarms using the telephone page system amplifiers and speakers. Alarm initiation and tone selection capability are provided in the main control room.

Since volume control adjustment knobs are provided with each amplifier, a volume control bypass relay is provided. These relays bypass the volume controls upon initiation of an alarm by the siren tone generator, thereby providing full volume for alarms. Zones are automatically merged during an alarm condition.

Within the plant and outside area zones, subcircuits are provided which break the zone into several sections. Each subcircuit can be disconnected from the rest of the system at a central location should a disabling failure occur.

Power to the telephone/page system is provided from the non-Class 1E dc and uninterruptible power supply system sized to supply power for 120 minutes after a loss of ac power.

9.5.2.2.3 Private Automatic Branch Exchange System

The private automatic branch exchange (PABX) system provides communication between the system stations, with capability for transferring calls and providing conference calls at up to five stations.

A portion of the PABX, specifically in the main control room and technical support center area, has additional capability. The telephones in these areas are programmable. Buttons on the phone can be dedicated and color coded to specific telephone numbers.

The PABX system also interfaces with the following communication systems:

- The wireless telephone system
- Hotlines to specified locations; for example, dedicated communication lines with load dispatcher to support and coordinate the system grid is as described in Subsection 9.5.2.5
- Local area telephone system lines
- Access to the page circuit in the telephone page system
- Direct extensions from the PABX locations exterior to the plant as dictated in Subsection 9.5.2.5

The hotline circuits are dedicated channels that provide direct communication between the main control room and the headquarters or other facilities as required in Subsection 9.5.2.5.

Commercial telephone lines are provided by the local area telephone company. Telephone lines may not terminate at the PABX. There are private lines that bypass the switch and ring directly at a telephone set. These numbers are located in the main control room, the alarm stations and at specific management offices located throughout the site. The local telephone company lines that terminate at the switch are programmed to reserve part of the lines for outgoing calls only. Others are programmed for incoming only so that some lines are available for calling onto and off of the site. The number of lines will be defined as required in Subsection 9.5.2.5.

Power to the PABX is provided from the non-Class 1E dc and uninterruptible power supply system sized to supply power for 120 minutes after a loss of ac power.

9.5.2.2.4 SoundPowered System

Two unitized systems are provided as follows:

- A loop soundpowered system for refueling
- A multiloop system throughout the plant for startup and maintenance testing

The soundpowered system does not require external power supply for operation.

9.5.2.2.5 Offsite Interfaces and Emergency Offsite Communications

Offsite interfaces and emergency offsite communications are described in the Emergency Plan.

9.5.2.3 System Operation Communication Stations

Table 9.5.2-1 lists the communication stations provided for operator use during transients.

The main control room and remote shutdown room are designed and instrumented to bring the plant to a safe shutdown condition without relying on communications equipment. Various communication stations are provided throughout the plant.

9.5.2.4 Inspection and Testing Requirements

Communication systems of the types described above are conventional and have a history of reliable operation. Most of these systems are in routine use, and this routine use will demonstrate their availability. Those systems not frequently used, but required during emergency situations, are tested at periodic intervals to demonstrate operability when required.

9.5.2.5 Combined License Information

9.5.2.5.1 Offsite Interfaces

Interfaces to required offsite locations, including the recommendations of BL-80-15 (Reference 21) regarding loss of the emergency notification system due to a loss of offsite power, are addressed in Subsection 9.5.2.2.5.

9.5.2.5.2 Emergency Offsite Communications

The emergency offsite communication system, including the crisis management radio system is addressed in Subsection 9.5.2.2.5.

9.5.2.5.3 Security Communications

The security communication system is addressed in the Physical Security Plan.

9.5.3 Plant Lighting System

The plant lighting system includes normal, emergency, panel, and security lighting. The normal lighting provides normal illumination during plant operating, maintenance, and test conditions. The emergency lighting provides illumination in areas where emergency operations are performed upon loss of normal lighting. The panel lighting in the control room is designed to provide the minimum illumination required at the safety panels. The security lighting system is described in separate security documents referred to in Section 13.6.

9.5.3.1 Design Basis

9.5.3.1.1 Safety Design Basis

- The normal and emergency lighting in the main control room and in the remote shutdown room is non-Class 1E. The emergency lighting in these plant areas is fed from a Class 1E uninterruptible power supply through two series fuses that are coordinated for isolation. The emergency lighting provides illumination for 72 hours upon loss of normal lighting. In other plant areas, the emergency lighting provides illumination for 8 hours.

- Lighting for the safety panels in the control room is provided by the panel lighting system. The power for the panel lighting is from the Divisions B and C Class 1E inverters through Class 1E distribution panels. The panel lighting circuits up to the lighting fixture are classified as associated and are routed in Seismic Category I raceways. The bulbs are not seismically qualified.

- During the 72 hour period following a loss of all ac power sources, lighting in the main control room can be provided as described in Subsection 9.5.3.2.2.

9.5.3.1.2 Power Generation Design Basis

- The plant lighting system is non-Class 1E.
- The plant lighting system provides illumination levels for normal and emergency lighting as recommended in Illuminating Engineering Society Lighting Handbook (Reference 5).
- Mercury vapor lamps and mercury switches are not used in fuel handling areas.
- High-intensity discharge (HID) and fluorescent lamps are not used in the containment and fuel handling areas due to their mercury content. Incandescent lighting or other lighting not containing restricted materials is used in these areas.

9.5.3.2 System Description

9.5.3.2.1 Normal Lighting

Power to the normal lighting system is supplied from the non-Class 1E ac power distribution system at the following voltage levels:

- 480/277 V, three-phase, four-wire, grounded neutral system lighting panels are fed from the 480 V motor control centers; this source is for the lighting fixtures rated at 480/277 V and for the welding receptacles.
- 208/120 V, three-phase, four-wire, grounded neutral system distribution panels are fed from the 480 V motor control centers through dry-type 480-208/120 V transformers; this source is for lighting and utility receptacles.
- 208/120 V, three-phase, four-wire, grounded neutral regulated power fed from the 480 V motor control centers through the Class 1E 480 - 208/120 V voltage regulating transformers (divisions B and C); this source is for the normal and emergency lighting in the main control room and remote shutdown room and is isolated through two series fuses for isolation. The normal lighting in these plant areas is non-Class 1E.

The normal lighting system has the following features:

- The normal lighting system is powered from the diesel-backed buses and the lighting load is distributed between the two onsite standby diesel generator buses.
- The motor control centers powering the normal lighting system are energized from the 480 V load centers connected in a tie-breaker configuration.
- Lighting distribution panel branch circuit breakers are controlled by a lighting control system. Approximately 75 percent of the normal lighting is tripped off automatically upon loss of normal ac power (except in the main control room and in the remote shutdown room) to limit the load on the onsite standby diesel generators. The lighting control system allows the operator to energize or de-energize lighting in selected areas based on the actual need and available power from the onsite standby diesel generators.
- The lighting circuits are staggered as much as practical. The staggered circuits receive power from separate buses to prevent complete loss of light in the event of a bus or a circuit failure.

- The lighting fixtures located in the vicinity of safety-related equipment are supported so that they do not adversely impact this equipment when subjected to the seismic loading of a safe shutdown earthquake.

- The control room and remote shutdown room lighting uses semi-indirect, low-glare lighting fixtures and programmable dimming features. The normal control room lighting provides at least 50 foot candles of illumination at the safety panel and at the workstations when the dimming features are adjusted for maximum illumination. The normal remote shutdown room lighting provides at least 50 foot candles of illumination at the remote shutdown workstation when the dimming features are adjusted for maximum illumination.

9.5.3.2.2 Emergency Lighting

Emergency lighting is designed to provide the required illumination levels in the areas as described below:

- The main control room and remote shutdown room each has emergency lighting consisting of 120 V ac fluorescent lighting fixtures which are continuously energized. The fixtures are powered from the Class 1E 250 V dc switchboards through the Class 1E 208Y/120 V ac inverters and are isolated through two series fuses. Three hour fire barrier separation is provided between redundant emergency lighting power supplies and cables outside the main control room and the remote shutdown area. The control room lighting complies with the human factor requirements by utilizing semi-indirect, low-glare lighting fixtures and programmable dimming features. The control room emergency lighting is integrated with normal lighting that consists of identical lighting fixtures and dimming features. The emergency lighting system is designed so that, to the extent practical, alternate emergency lighting fixtures are fed from separate divisions of the Class 1E dc and uninterruptible power supply system. Both normal and emergency lighting fixtures, controllers, dimmers, and associated cables used in the main control room and remote shutdown room are non-Class 1E. The ceiling grid network, raceways and fixtures utilize seismic supports. A single fault cannot interrupt all of the lighting in the main control room and at the remote shutdown workstation simultaneously. The emergency lighting provides at least 10 foot candles of illumination at the safety panel, at the workstations in the control room, and at the remote shutdown workstation when the dimming features are adjusted for maximum illumination.

- Following the 72 hour period after a loss of all ac power sources, the lighting in the main control room is powered from two ancillary ac generators as described in Subsection 8.3.1.1.1.

- Emergency lighting in areas outside the main control room and remote shutdown room is accomplished by 8-hour, self-contained, battery pack lighting units. These units are non-Class 1E and provide illumination for safe ingress and egress of personnel following a loss of normal lighting and for those areas which could be involved in power recovery (for example, onsite standby diesel-generators and their controls). In addition, these units are provided in areas where manual actions are required for operation of equipment needed during a fire. These units are normally powered from the non-Class 1E 480/277 V ac motor control centers and they automatically switch to their internal dc source once normal ac power is lost.

9.5.3.2.3 Panel Lighting

Panel lighting is designed to provide lighting in the control room at the safety panels as described below:

- Panel lighting consists of lighting fixtures located on or near safety panels in the control room. The panel lights are continuously energized. The fixtures are powered from the Divisions B and C Class 1E inverters through Class 1E distribution panels.
- The circuits are treated as Class 1E. The panel lighting circuits up to the lighting fixture are classified as associated and are routed in Seismic Category I raceways.
- The bulbs are not seismically qualified.

9.5.3.3 Safety Evaluation

The areas that require lighting for safe shutdown are the main control room and the remote shutdown room when the main control room is not accessible.

- Lighting fixtures in the main control room and remote shutdown room are seismic Category II.
- Emergency and panel lighting circuits up to the lighting fixture are routed in seismic Category I raceways.
- Panel Lighting circuits up to the lighting fixture are treated as Class 1E and Classified as associated. This is acceptable to the Class 1E power supply because of the over current protective device coordination.
- Bulbs are not seismically qualified. However, the bulbs can only fail open and therefore do not represent a hazard to the Class 1E power sources.
- Power to normal and emergency lighting in the main control room and in the remote shutdown room is supplied from the redundant divisions of Class 1E dc and UPS system through two series fuses for isolation. The fuses protect the batteries from failures of the non-1E lighting circuits. The Class 1E batteries provided in the Class 1E dc and UPS system are capable of powering the emergency lighting in these rooms for 72 hours when the normal ac sources are not available. Operation beyond 72 hours is described in Subsection 8.3.1.1.1.

9.5.3.4 Test and Inspections

The ac lighting circuits are normally energized and require no periodic testing. The 8-hour battery pack lighting is inspected and tested periodically.

9.5.3.5 Combined License Information for Plant Lighting

This section contained no requirement for additional information.

9.5.4 Standby Diesel Fuel Oil System

This subsection describes the features of the standby diesel fuel oil system. The standby diesel generators are supplied by a combined storage system of fuel oil storage tanks. Two above-ground fuel oil storage tanks for the combined system service are provided. These tanks store diesel grade fuel. The standby diesel generators are described in Subsection 8.3.1.1.2.

9.5.4.1 Design Basis

9.5.4.1.1 Safety Design Basis

The standby diesel fuel oil system serves no safety-related function and therefore has no nuclear safety design basis.

9.5.4.1.2 Power Generation Design Basis

The standby diesel fuel oil system serves no power generation function. Its function is to store and transfer fuel oil for the onsite standby diesel generators. The system is designed to meet the following requirements:

- Provide a supply of fuel sufficient to operate each diesel generator at continuous rating for 7 days
- Provide a 4-day fuel supply for the two ancillary diesel generators

9.5.4.1.3 Codes and Standards

The codes and standards that are applicable to the components of the Standby Diesel Fuel Oil System that support the standby diesel generators are listed in Section 3.2. The portions of the Standby Diesel Fuel Oil System that support the standby diesel generators follow the guidance for distillate fuel oil supply contained in Chapter 13 of the DEMA Standard Practices (Reference 19).

9.5.4.2 System Description Storage and Transfer

9.5.4.2.1 General Description

The standby diesel fuel oil system is shown in Figure 9.5.4-1. The system consists of two fuel oil storage tanks, a diesel generator fuel oil transfer system, and an ancillary diesel generator fuel oil supply system.

Two fuel oil storage tanks are provided, one for each of the standby diesel generators.

The plant finished grade elevation will be higher than the probable maximum flood level (refer to Subsection 3.4.1.1, Protection From External Flooding). Therefore the system will be safe from flooding.

The diesel generator fuel oil transfer system consists of two independent fuel storage, transfer and recirculation flow paths; that is, one path per diesel generator. Each path consists of a fuel oil storage tank, one fuel transfer pump, diesel fuel oil supply and fuel return piping, a day tank, and the associated specialties valves, fittings, and instrumentation. The supply lines from the transfer pumps to the daytanks include fuel oil heaters, filters and moisture separators. The system is protected from the effects of low temperatures by the inline electric oil heater in the transfer line.

The ancillary diesel generator fuel oil supply portion of the system consists of a single 100 percent capacity tank serving both ancillary diesel generators. The tank is located inside the annex building and is served by the annex building heating and ventilation system. The tank is insulated and provided with heaters to maintain the fuel oil above the oil cloud point. Fuel oil lines from the tank to the diesels are insulated.

Two separate prefabricated insulated, heated and ventilated weather enclosures are provided for the transfer systems. Each enclosure houses one diesel fuel oil transfer pump assembly. The enclosures

are sufficiently separated to prevent a fire in either enclosure from causing an interruption in the other flow path.

Characteristics of the system components are provided in Table 9.5.4-1.

9.5.4.2.2 Component Description

9.5.4.2.2.1 Fuel Storage Tanks

The two fuel oil storage tanks are located on grade. The tanks are designed and fabricated to API-650 Standards. Fittings are provided for each tank for level instrumentation, ventilation, sampling, water removal and sounding. Flanged openings are provided as manholes for access to the tank interior and each tank is equipped with an internal sump and a drain connection. Each tank is erected on a continuous concrete slab totally contained within a concrete dike to contain spills and prevent damage to the environment and seepage into the ground water.

The design of the standby diesel fuel oil system allows replenishment of fuel without interrupting operation of the diesel generator. The tank fill connection includes an internal pipe and diffuser to limit inlet filling velocities to prevent turbulence of sediment on the bottom of the tank. In addition, the diesel fuel oil transfer connections at the fuel oil storage tanks are 6 inches above the tank bottom to reduce the potential of sediment entry into the pipe line. A moisture separator and duplex filters are provided in the diesel fuel oil piping and a duplex fuel oil filter is provided on each engine to prevent detrimental effects on diesel performance from sediment.

9.5.4.2.2.2 Diesel Generator Fuel Oil Transfer

The diesel generator fuel oil transfer system consists of two modularized skid mounted assemblies, each consisting of suction strainers, a transfer pump, a fuel oil heater, a moisture separator, and a fuel filter with the interconnecting piping, valves and instrumentation.

The fuel oil transfer pumps are of the motor driven gear positive displacement type. Each pump capacity is approximately four times the full-load consumption rate of the associated diesel generator. The pump and pump motor are mounted on a common baseplate. A prefabricated weather enclosure protects the strainer, transfer pumps, heater, moisture separator, and duplex filters and associated piping. There is no fixed fire protection water system inside the enclosure; therefore, spurious actuation of a fire protection system cannot occur.

9.5.4.2.2.3 Standby Diesel Generator Fuel Oil Day Tanks

The diesel generator fuel oil day tanks each provide four hours of operation for its associated diesel engine at continuous rating without resupply from a fuel oil storage tank. The day tanks are located within the diesel generator building and are separated from the remainder of the diesel generator building by 3-hour rated fire barriers. The day tanks are separate from sources of ignition or high-temperature surfaces. The day tank elevation is selected to provide the necessary suction head for the diesel engine fuel oil pump. The fuel oil piping is run in a piping trench from the tank to the engine. The fuel oil piping on the engine is located away from hot surfaces. Tank fittings provide for external tank fill, water removal, recirculation, and instrumentation. The fuel oil day tank is vented to atmosphere with a line which has a ball float check valve, and flame arrestor at the end. Since venting is to the outside atmosphere, there is not a buildup of combustible fumes within the diesel generator building.

9.5.4.2.2.4 Ancillary Diesel Generator Fuel Oil Storage Tank

The ancillary diesel generator fuel oil storage tank provides four days of operation of the ancillary diesel generators. The tank is analyzed to show that it will withstand an SSE and is located in the same room as the ancillary diesel generators in the annex building. This room is separated from the rest of the annex building by a 3-hour rated fire barrier. The tank elevation is selected to provide the necessary head for the diesels. The ancillary diesel generator fuel oil storage tank is vented to the atmosphere with a line which has a ball float check valve, and flame arrestor at the end. Since venting is to the outside atmosphere, there is not a buildup of combustible fumes within the annex.

9.5.4.2.2.5 Piping and Tank Surfaces

The exterior and interior surfaces of the fuel oil storage tanks are painted with a primer and finish coat system for corrosion protection of the tank surface. Exterior surfaces of the diesel fuel oil transfer piping are painted for corrosion protection. Buried sections are enclosed in guard pipes to prevent leakage to the environment.

The guard pipe containment system is corrosion resistant plastic, designed and fabricated for the site overburden wheel loads which result from equipment removal and replacement.

9.5.4.2.3 System Operation

The fuel oil storage tanks for the diesel generators are replenished from trucks (or other mobile suppliers) as required to maintain a seven day supply for each standby diesel generator. Each storage tank is equipped with a vent line to atmosphere at the top of the tank that ends with a flame arrester. A tank fill line runs to each tank and is extended to the truck unloading station. The fill line incorporates a normally closed valve and a filler cap at the end to preclude the entrance of water. The fill line is above grade. The fill line has a strainer located downstream of the isolation valve to prevent entrance of deleterious solid material into the tank. A water removal port is located at the tank sump.

Each diesel oil transfer pump takes suction from a fuel oil storage tank and discharges fuel oil to the diesel generator fuel oil day tank. Each pump is capable of supplying its diesel generator and, simultaneously, increasing the inventory in the fuel oil day tank. The fuel oil transfer pump is automatically started and stopped on day tank level control. Part of the pump discharge flow is returned to the storage tank via the recirculation line. The filter in the discharge line to the day tank is monitored by measuring differential pressures across the filter and by providing a high differential pressure alarm.

In the event the diesel fuel oil degrades during storage, biocides and other fuel additives are introduced to the tanked fuel oil to prevent deterioration of the oil, accumulation of sludge in the storage tanks, and the growth of algae and fungi.

Site-specific conditions determine the requirements for oil supply and emergency fuel delivery.

Provisions are included in the fuel oil storage tanks and day tanks to check and remove accumulated water.

The fuel oil storage tank for the ancillary diesel generators is replenished from trucks (or other mobile supplier) as required to maintain a 4-day supply for both ancillary diesel generators.

9.5.4.3 Safety Evaluation

The standby diesel fuel oil system serves a defense in depth function and requires no nuclear safety evaluation.

9.5.4.4 System Evaluation

The standby diesel generator fuel oil transfer system supplies fuel oil to the diesel generators which provide defense in depth electric power for investment protection.

The fuel oil storage tanks are sized to provide sufficient capacity for seven days of operation for each standby diesel generator. Within this period, the operator can arrange for additional fuel to be delivered to the plant site. An independent fuel supply path consisting of a fuel storage tank, a day tank, strainer, transfer pump, piping, oil heater, oil filter, moisture separator and valves is provided for each diesel generator. Each pump is powered from the electrical bus on which the diesel generator it serves is connected. Failure of a pump or a diesel generator would not affect the operability of components in the other train.

Maintenance of the fuel oil temperature above the cloud point is achieved automatically on low temperatures by an electric fuel oil heater at the discharge of the transfer fuel oil pump and by burial of the transfer piping below the frostline. The fuel oil system can be maintained above the cloud point temperature with the system electric heater in service and operation in the recirculation mode (by passing the day tank) back to the fuel oil storage tank. Above grade piping and inline equipment outdoors are insulated.

Electrical power supply for the diesel fuel oil transfer pumps and electric heater is from the associated diesel generator backed 480 V bus.

The fuel oil storage tank for the ancillary diesel generators is sized to provide sufficient capacity for four days of operation for both ancillary diesel generators. The ancillary diesel generators are not needed for the first 72 hours following a loss of all ac. Therefore, the operator has seven days to arrange for additional fuel to be delivered to the plant site. Maintenance of the fuel oil temperature above the cloud point when a normal ac source is available is achieved by the normal annex building heating and ventilation system maintaining room temperature within its normal range. Maintenance of the fuel oil temperature above the cloud point during operation of the ancillary diesel generators is achieved by electric tank heaters and tank insulation.

9.5.4.5 Tests and Inspections

9.5.4.5.1 Diesel Generator Fuel Oil Supply

The standby diesel generator fuel oil storage and transfer system operability may be demonstrated during tests of the diesel generator, or testing may be performed by operation of the system in recirculation mode (bypassing the day tank) and pumping fuel through the recirculation line back to the fuel oil storage tank. Fuel reserve for testing is supplied by sizing the storage tanks to contain fuel in excess of the volume required for seven days of operation at full load. Provisions are made to sample and analyze diesel fuel periodically to verify the fuel quality requirements.

9.5.4.5.2 Fuel Oil Quality

The diesel fuel oil testing program requires testing both new fuel oil and stored fuel oil. High fuel oil quality is provided by specifying the use of ASTM Grade 2D fuel oil with a sulfur content as specified by the engine manufacturer.

A fuel sample is analyzed prior to addition of ASTM Grade 2D fuel oil to the storage tanks. The sample moisture content and particulate or color is verified per ASTM D4176. In addition, kinematic viscosity is tested to be within the limits specified in Table 1 of ASTM D975. The remaining critical parameters per Table 1 of ASTM D975 are verified compliant within 7 days.

Fuel oil quality is verified by sample every 92 days to meet ASTM Grade 2D fuel oil criteria. The addition of fuel stabilizers and other conditioners is based on sample results.

The fuel oil storage tanks are inspected on a monthly basis for the presence of water. Any accumulated water is to be removed.

9.5.4.6 Instrumentation Applications

9.5.4.6.1 Standby Diesel Generator Fuel Oil Supply

The transfer pumps can be operated from the control room. Alarms and indications of tank levels and transfer pump status are displayed in the control room. A secondary means of tank level determination is provided by dipsticks or sounding ports. Day tank fuel oil transfer pumps start and stop on low and high level, respectively, and the tank level transmitter activates a day tank high or low level alarm. The diesel oil transfer pumps start automatically when the level in the day tank decreases to set capacity. The day tank low level alarm annunciates when the level decreases to a point where 2 hours of fuel remain. The diesel oil transfer pumps are automatically stopped when the day tank level has increased to a higher set level.

Low fuel oil level in the standby diesel fuel oil storage tanks is also alarmed.

9.5.4.6.2 Ancillary Diesel Generator Fuel Oil Supply

There is no control room monitoring or control associated with the ancillary diesel generator fuel oil supply system. All controls and instruments are local/manual only. Provision is made to locally monitor fuel level in the tank.

9.5.4.7 Combined License Information

9.5.4.7.1 The site-specific need for cathodic protection in accordance with NACE Standard RP-01-69 for external metal surfaces of metal tanks in contact with the ground is addressed in APP-GW-GLR-120 (Reference 24).

9.5.4.7.2 The site-specific factors in the fuel oil storage tank installation specification to reduce the effects of sun heat input into the stored fuel, the diesel fuel specifications grade and the fuel properties consistent with manufacturers' recommendations, and measures to protect against fuel degradation by a program of fuel sampling and testing are partially addressed in APP-GW-GLR-120 (Reference 24), and by the information as delineated in the following paragraph:

The epoxyurethane paint color selected for the exterior of the standby diesel fuel oil storage tanks shall be white to minimize radiant sunlight heat transmission to the tank oil stored fuel volume.

The diesel fuel specifications grade and the fuel properties consistent with manufacturers' recommendations and the measures to protect against fuel degradation by a program of fuel sampling and testing are addressed in Subsection 9.5.4.5.2.

9.5.5 References

1. NUREG-0800, U. S. Nuclear Regulatory Commission Standard Review Plan, Section 9.5.1, "Fire Protection Program," Revision 3, July 1981, including Branch Technical Position (BTP) CMEB 9.5-1, "Guidelines for Fire Protection for Nuclear Power Plants," Revision 2, July 1981.

2. National Fire Protection Association Codes and Standards:

   NFPA 10, 1998: Standard for Portable Fire Extinguishers; NFPA 13, 1999: Standard for the Installation of Sprinkler Systems; NFPA 14, 2000: Standard for the Installation of Standpipe, Private Hydrants, and Hose Systems; NFPA 15, 2001: Standard for Water Spray Fixed Systems for Fire Protection; NFPA 20, 1999: Standard for the Installation of Stationary Pumps for Fire Protection; NFPA 22, 1998: Standard for Water Tanks for Private Fire Protection; NFPA 24, 1995: Standard for Installation of Private Fire Service Mains and Their Appurtenances; NFPA 30, 2000: Flammable and Combustible Liquids Code; NFPA 50A, 1999: Standard for Gaseous Hydrogen Systems at Consumer Sites; NFPA 50B, 1999: Standard for Liquefied Hydrogen Systems at Consumer Sites; NFPA 72, 1999: National Fire Alarm Code; NFPA 780, 2000: Standard for the Installation of Lightning Protection Systems; NFPA 804, 2001: Standard for Fire Protection for Advanced Light Water Reactor Electric Generating Plants.

3. "IEEE Standard for Type Test of Class 1E Electric Cables, Field Splices, and Connections for Nuclear Power Generating Stations," IEEE Std 3831974.

4. Fire Protection Handbook, Edited by A. E. Cote, National Fire Protection Association, 16th edition.

5. IES - 1987 Lighting Handbook.

6. IEEE Standard 281, "IEEE Standard Service Conditions for Power System Communication Equipment," 1984.

7. Beranek, Lee L., Noise Reduction, McGraw Hill Book Co., 1960.

8. EPRI Report NP 6559, "Voice Communication Systems Compatible with Respiratory Protection."

9. NRC IE Circulator No. 80-89, "Problems with Plant Internal Communications Systems," April 18, 1990.

10. 10 CFR 50, Appendix E, IV.E.9, "ERF Communications."

11. NRC IEN 87-58, "Continuous Communication Following Emergency Notifications."

12. NRC IEN 86-097, "Emergency Communication Systems."

13. 10 CFR 73, Sections 55 (e) and (f), "Physical Protection of Plants and Materials."

14. NUREG-0654, "Criteria for Preparation and Evaluation of Radiological Emergency Response Plan."

15. 10 CFR 50, Section 50.48 "Fire Protection."

16. 10 CFR 50, Appendix A, Criterion 3 "Fire Protection."

17. NRC Policy Issue SECY-97-087, "Policy, Technical and Licensing Issues Pertaining to Evolutionary and Advanced Light Water Reactor (ALWR) Designs," Section I.E, "Fire Protection."

18. IEEE Standard for Flame Testing of Cables for Use in Cable Tray in Industrial and Commercial Occupancies, IEEE Std. 1202 - 1991.

19. Standard Practices for Medium Speed Stationary Diesel and Gas Engines, Sixth Edition, Diesel Engine Manufacturers Association, 1972. (Note: Although this standard is obsolete, the guidance for distillate fuel systems in Chapter 13 is applicable for AP1000.)

20. WCAP-15871, Revision 1, "AP1000 Assessment Against NFPA 804," December 2002.

21. NRC Bulletin 80-15, "Possible Loss of Emergency Notification System (ENS) with Loss of Offsite Power," June 18, 1980.

22. APPGWGLR027, "Operator Actions Minimizing Spurious ADS Actuations," Westinghouse Electric Company LLC.

23. APPGWGLR019, "Fire Resistance Test Data," Westinghouse Electric Company LLC.

24. APP-GW-GLR-120, “Cathodic Protection for Metal Tanks in Contact with the Ground,” Westinghouse Electric Company LLC.

201. National Fire Protection Association, “Standard for Inspection, Care, and Use of Fire Hose, Couplings, and Nozzles and the Service Testing of Fire Hose,” NFPA 1962, 2003.

202. National Fire Protection Association, “Standard for Fire Prevention During Welding, Cutting, and Other Hot Work,” NFPA 51B, 2003.

203. National Fire Protection Association, “Standard for Safeguarding Construction, Alteration, and Demolition Operations,” NFPA 241, 2004.

204. National Fire Protection Association, “Standard on Industrial Fire Brigades,” NFPA 600, 2005.

205. National Fire Protection Association, “Recommended Practice for Pre-incident Planning,” NFPA 1620, 2003.

206. National Fire Protection Association, “Standard Methods of Fire Tests for Flame Propagation of Textiles and Films,” NFPA 701, 2004.

207. National Fire Protection Association, “Standard for Fire-Retardant Treated Wood and Fire-Retardant Coatings for Building Materials,” NFPA 703, 2006.

208. National Fire Protection Association, “Standard for Fire Service Respiratory Protection Training,” NFPA 1404, 2006.

209. National Fire Protection Association, “Standard on Training for Initial Emergency Scene Operations,” NFPA 1410, 2005.

210. National Fire Protection Association, “Standard on Fire Department Occupational Safety and Health Program,” NFPA 1500, 2007.

211. National Fire Protection Association, “Standard for Fire Protection for Advanced Light Water Reactor Electric Generating Plants,” NFPA 804, 2001.

212. National Fire Protection Association, “Standard for the Inspection, Testing, and Maintenance of Water-Based Fire Protection Systems,” NFPA 25, 2008.

Table 9.5.1-1 (Sheet 1 of 29)
AP1000 Fire Protection Program Compliance With BTP CMEB 9.5-1

BTP CMEB 9.5-1 Guideline	Paragraph	Comp[1]	Remarks
Fire Protection Program			
1. Direction of fire protection program; availability of personnel.	C.1.a(1)	WA C	See Note 2 Comply. Subsections 9.5.1.8.1.2 and 13.1.1.2.10 address this requirement.
2. Defense-in-depth concept; objective of fire protection program.	C.1.a(2)	WA C	See Note 2 Comply. Subsections 9.5.1.8 and 9.5.1.8.1 address this requirement.
3. Management responsibility for overall fire protection program; delegation of responsibility to staff.	C.1.a(3)	WA C	See Note 2 Comply. Subsections 9.5.1.8.1.2, 13.1.2.1.3.9, and 13.1.1.2.10.
4. The staff should be responsible for: a. Fire protection program requirements. b. Post-fire shutdown capability. c. Design, maintenance, surveillance, and quality assurance of fire protection features. d. Fire prevention activities. e. Fire brigade organization and training. f. Prefire planning.	C.1.a(3)	WA C	See Note 2 Comply. Subsection 13.1.2.1.3.9 addresses this requirement.
5. The organizational responsibilities and lines of communication pertaining to fire protection should be defined through the use of organizational charts and functional descriptions.	C.1.a(4)	WA C	See Note 2 Comply. Organization and lines of communication are addressed in Figure 13.1-201. Functional descriptions are addressed in Subsections 13.1.1.2.10, 13.1.1.3.1.3, 13.1.2.1.3.9, and 13.1.2.1.5.
6. Personnel qualification requirements for fire protection engineer, reporting to the position responsible for formulation and implementation of the fire protection program.	C.1.a(5)(a)	WA C	See Note 2 Comply. Subsection 13.1.2.1.3.9 addresses this requirement.
7. The fire brigade members' qualifications should include a physical examination for performing strenuous activity, and the training described in Position C.3.d.	C.1.a(5)(b)	WA C	See Note 2 Comply. Subsections 9.5.1.8.2.1 and 9.5.1.8.2.2 addresses this requirement.
8. The personnel responsible for the maintenance and testing of the fire protection systems should be qualified by training and experience for such work.	C.1.a(5)(c)	WA C	See Note 2 Comply. Subsection 9.5.1.8.7 addresses this requirement.

Table 9.5.1-1 (Sheet 2 of 29)
AP1000 Fire Protection Program Compliance With BTP CMEB 9.5-1

BTP CMEB 9.5-1 Guideline	Paragraph	Comp[1]	Remarks
9. The personnel responsible for the training of the fire brigade should be qualified by training and experience for such work.	C.1.a(5)(d)	WA C	See Note 2 Comply. Subsection 9.5.1.8.2.2 addresses this requirement.
10. The following NFPA publications should be used for guidance to develop the fire protection program: No. 4, No. 4A, No. 6, No. 7, No. 8, and No. 27.	C.1.a(6)	WA C	See Note 2 Alternate Compliance. The NFPA codes cited in BTP CMEB 9.5-1 are historical. Current NFPA codes are referenced for guidance for the fire protection program. Subsection 9.5.1.8.1.1 addresses this requirement.
11. On sites where there is an operating reactor, and construction or modification of other units is underway, the superintendent of the operating plant should have a lead responsibility for site fire protection.	C.1.a(7)	WA C	See Note 2 Comply. Subsection 13.1.1.2.10 addresses this requirement. Units 6 & 7 are sufficiently separated from Units 3 & 4.
Fire Protection Analysis			
12. The fire protection analysis should demonstrate that the plant will maintain the capability to perform safe shutdown functions and minimize radioactive releases to the environment in the event of a fire.	C.1.b	C	
13. The fire protection analysis should be performed by fire protection and reactor systems engineers to (1) consider potential in situ and transient fire hazards; (2) determine the consequences of a fire in any location in the plant; and (3) specify measures for fire prevention, detection, suppression, and containment.	C.1.b	C	
14. Fires involving facilities shared between units should be considered.	C.1.b	WA C	Comply. The FHA demonstrates the plant's ability to perform safe shutdown functions and minimize radioactive releases to the environment. Postulated fires in shared facilities that do not contain SSCs important to safety and do not contain radioactive materials do not affect these functions.

Table 9.5.1-1 (Sheet 3 of 29)
AP1000 Fire Protection Program Compliance With BTP CMEB 9.5-1

BTP CMEB 9.5-1 Guideline	Paragraph	Comp[1]	Remarks
15. Fires due to man-made site-related events that have a reasonable probability of occurring and affecting more than one reactor unit should be considered.	C.1.b	WA C	To be evaluated on a site-specific basis. Plant siting decisions are expected to preclude the need to consider such events. Comply. Sections 2.2.3 and 3.5 establish that these events are not credible.
16. Establishing three levels of fire damage limits according to safety function (hot shutdown, cold shutdown and design basis accidents).	C.1.b	C	AP1000 uses two levels of damage limits: safe shutdown and design basis accidents. Safe shutdown capability is protected from damage caused by a single fire.
17. The fire protection analysis should separately identify hazards and provide appropriate protection in locations where safety-related losses can occur.	C.1.b	C	
Fire Suppression System Design Basis			
18. Total reliance should not be placed on a single fire suppression system. Backup fire suppression capability should be provided.	C.1.c(1)	C	Automatic fire suppression systems are backed up by manual suppression systems (standpipe) and portable extinguishers.
19. A single active failure or a crack in a fire suppression system moderate energy line should not impair both the primary and backup fire suppression capabilities.	C.1.c(2)	AC	Criteria followed except for containment and outlying buildings. The fire suppression systems located inside the containment are qualified to seismic Category I criteria, which reduces the potential for a failure of the system. The buildings outside the auxiliary building do not contain safety-related equipment, or present an exposure hazard to structures containing safety-related equipment. Manual fire suppression capability using hose lines connected to the outside hydrants of the yard main can be provided in the event of a failure of the interior fire suppression systems.

Table 9.5.1-1 (Sheet 4 of 29)
AP1000 Fire Protection Program Compliance With BTP CMEB 9.5-1

BTP CMEB 9.5-1 Guideline	Paragraph	Comp[1]	Remarks
20. The fire suppression system should be capable of delivering water to manual hose stations located within hose reach of areas containing equipment required for safe shutdown following a safe shutdown earthquake (SSE).	C.1.c(3)	AC	Criteria followed except for the PCS valve room, Room 12701 (Fire Zone 1270 AF 12701). The quantity of combustible material in this fire zone is extremely low, consisting primarily of cable insulation related to the six PCS valves and related PCS instrumentation. Portable fire extinguishers are provided on both the lower level (El. 264′-6″) and the upper level (El. 286′-6″) of the PCS valve room for manual fire fighting.
Fire Suppression System Design Basis			
21. Fire protection systems should retain their design capability for natural phenomena of less severity and greater frequency than the most severe natural phenomena.	C.1.c(4)	C	Structures housing the fire protection system meet the applicable requirements of Chapter 3 to provide protection from natural phenomena.
22. Fire protection systems should retain their original design capability for potential man-made, site-related events that have a reasonable probability of occurring at a specific plant site.	C.1.c(4)	WA C	To be evaluated on a site-specific basis. Plant siting decisions are expected to preclude the need to consider such events. Comply. Sections 2.2.3 and 3.5 establish that these events are not credible.
23. The effects of lightning strikes should be included in the overall plant fire protection program.	C.1.c(4)	C	Lightning protection will be provided per NFPA 780.
24. The consequences of inadvertent operation or of a crack in a moderate energy line in the fire suppression system should meet the guidelines specified for moderate energy systems outside containment in SRP Section 3.6.1.	C.1.c(5)	C	

Table 9.5.1-1 (Sheet 5 of 29)
AP1000 Fire Protection Program Compliance With BTP CMEB 9.5-1

BTP CMEB 9.5-1 Guideline	Paragraph	Comp[1]	Remarks
Alternate or Dedicated Shutdown			
25. Alternative or dedicated shutdown capability should be provided where the protection of systems whose functions are required for safe shutdown is not provided by established fire suppression methods or by Position C.5.b.	C.1.d	AC	In Generic Letter (GL) 86-10, the staff stated its position that, for the purpose of analysis to Section III.G.2 of Appendix R to 10 CFR Part 50 criteria, the safe shutdown capability is defined as one of the two normal safe shutdown trains. The safety-related PXS and PCS are used to achieve and maintain safe shutdown following a fire and are acceptable as an alternative/ dedicated shutdown method for fire areas where the normal shutdown systems have not been protected in accordance with the guidance prescribed in the BTP.
Fire Protection Program Implementation			
26. The fire protection program for buildings storing new reactor fuel and for adjacent fire areas that could affect the fuel storage area should be fully operational before fuel is received at the site.	C.1.e(1)	WA C	See Note 2 Comply. Subsection 9.5.1.8.1 addresses this requirement.
27. The fire protection program for an entire reactor unit should be fully operational prior to initial fuel loading in that unit.	C.1.e(2)	WA C	See Note 2 Comply. Subsection 9.5.1.8.1 addresses this requirement.
28. Special considerations for the fire protection program on reactor sites where there is an operating reactor and construction or modification of other units is under way.	C.1.e(3)	WA C	See Note 2 Comply. Subsection 9.5.1.8.1.2. addresses this requirement.
29. Establishing administrative controls to maintain the performance of the fire protection system and personnel.	C.2	WA C	See Note 2 Comply. Subsection 9.5.1.8.1.2 addresses this requirement.
Fire Brigade			
30. The guidance in Regulatory Guide 1.101 should be followed as applicable.	C.3.a	WA C	See Note 2 Comply. Subsection 9.5.1.8.2.2 addresses this requirement.

Table 9.5.1-1 (Sheet 6 of 29)
AP1000 Fire Protection Program Compliance With BTP CMEB 9.5-1

BTP CMEB 9.5-1 Guideline	Paragraph	Comp(1)	Remarks
31. Establishing site brigade: minimum number of fire brigade members on each shift; qualification of fire brigade members; competence of brigade leader.	C.3.b	WA C	See Note 2 Comply. Subsections 9.5.1.8.1.2 and 13.1.2.1.5 address this requirement.
32. The minimum equipment provided for the brigade should consist of turnout coats, boots, gloves, hard hats, emergency communications equipment, portable ventilation equipment, and portable extinguishers.	C.3.c	WA C	See Note 2 Comply. Subsection 9.5.1.8.2.2 addresses this requirement.
33. Recommendations for breathing apparatus for fire brigade, damage control, and control room personnel.	C.3.c	C WA	Comply. Subsection 9.5.1.8.2.2 and Subsections 6.4.2.3 and 6.4.4 address these requirements. See Note 2. A breathing air compressor and receiver is provided in the compressed and instrument air system (CAS) to replenish the exhausted air supply bottles used by the fire brigade. Additionally, an equivalent 6-hour supply of reserve air (e.g., the 12 additional SCBA bottles) will be maintained in an area located outside of the turbine building. See Subsection 9.3.1 for further information.
34. Recommendations for the fire brigade training program.	C.3.d	WA C	See Note 2 Comply. Subsection 9.5.1.8.2.2 addresses this requirement.
Quality Assurance Program			
35. Establishing quality assurance (QA) programs by applicants and contractors for the fire protection systems for safety-related areas; identification of specific criteria for quality assurance programs.	C.4	C WA	Comply. Subsection 9.5.1.7 and Chapter 17 address this requirement. Fire protection quality assurance programs are incorporated in procurement documents. Deviations are evaluated and controlled. See Items 1. through 11. of this table for on-site implementation. See Note 2.

Table 9.5.1-1 (Sheet 7 of 29)
AP1000 Fire Protection Program Compliance With BTP CMEB 9.5-1

BTP CMEB 9.5-1 Guideline	Paragraph	Comp(1)	Remarks
Building Design			
36. Fire barriers with a minimum fire resistance rating of 3 hours should be provided to separate safety-related systems from any potential fires in nonsafety-related areas.	C.5.a(1)(a)	C	Structures housing safety-related systems are separated from nonsafety-related structures by 3-hour rated fire walls.
37. Fire barriers with a minimum fire resistance rating of 3 hours should be provided to separate redundant divisions of safety-related systems from each other.	C.5.a(1)(b)	C	See Subsection 9.5.1.2.1.1 for discussion of exceptions for the containment, main control room, and remote shutdown room.
38. Fire barriers with a minimum fire resistance rating of 3 hours should be provided to separate individual units on a multiple-unit site.	C.5.a(1)(c)	NA	See discussion of GDC 5 in subsection 3.1.1. The AP1000 is a single-unit plant.
39. Fire barriers should be provided within a single safety division to separate components or cabling that present a fire hazard to other safety-related components.	C.5.a (2)	C	
40. Openings through fire barriers for pipe, conduit, and cable trays that separate fire areas should be sealed or closed to provide a fire resistance rating equal to that required of the barrier.	C.5.a (3)	C	
41. Recommendations for internal sealing of conduits penetrating fire barriers.	C.5.a (3)	C	
42. Fire barrier penetrations that must maintain environmental isolation or pressure differentials should be qualified by test.	C.5.a (3)	C	Fire penetration seals that also perform other barrier functions are qualified by test for intended functions. The fire barrier penetration seal does not perform other barrier functions simultaneously.
43. Penetration designs should use only noncombustible materials.	C.5.a (3)	AC	Penetration designs shall use fire-resistant silicone-based seal material in accordance with the guidance of NUREG-1552. The seal design and tests demonstrate that the seals are capable of preventing the spread of fire and perform their intended safety function.

Table 9.5.1-1 (Sheet 8 of 29)
AP1000 Fire Protection Program Compliance With BTP CMEB 9.5-1

BTP CMEB 9.5-1 Guideline	Paragraph	Comp[1]	Remarks
44. The penetration qualification tests should use the time-temperature exposure curve specified by ASTM E-119.	C.5.a (3)	C	
45. Criteria for penetration qualification tests.	C.5.a (3)	C	
46. Penetration openings for ventilation systems should be protected by fire dampers having a rating equivalent to that required of the barrier.	C.5.a (4)	C	Penetration openings are protected in accordance with NFPA 90A. Fire dampers generally not provided for roof or exterior wall penetrations.
47. Flexible air duct couplings in ventilation and filter systems should be noncombustible.	C.5.a (4)	C	
48. Door openings in fire barriers should be protected with equivalently rated doors, frames, and hardware that have been tested and approved by a nationally recognized lab.	C.5.a (5)	C	
49. Fire doors should be self-closing or provided with closing mechanisms.	C.5.a (5)	C	
50. Fire doors should be inspected semiannually to verify that automatic hold-open, release, and closing mechanisms and latches are operable.	C.5.a (5)	WA C	See Note 2 Comply. Subsection 9.5.1.8.8 addresses this requirement.
51. Alternative means for verifying that fire doors protect the door opening as required in case of fire.	C.5.a (5)	WA C	See Note 2 Comply. Subsection 9.5.1.8.8 addresses this requirement.
52. The fire brigade leader should have ready access to keys for any locked fire doors.	C.5.a (5)	WA C	See Note 2 Comply. Subsection 9.5.1.8.2.2 addresses this requirement.
53. Areas protected by automatic total flooding gas suppression systems should have electrically supervised self-closing fire doors or should satisfy guideline (49) above.	C.5.a (5)	NA	No automatic gas suppression systems are used on AP1000.
54. Personnel access routes and escape routes should be provided for each fire area.	C.5.a (6)	C	

Table 9.5.1-1 (Sheet 9 of 29)
AP1000 Fire Protection Program Compliance With BTP CMEB 9.5-1

BTP CMEB 9.5-1 Guideline	Paragraph	Comp[1]	Remarks
55. Stairwells serving as escape routes, access routes for firefighting, or access routes to areas containing equipment necessary for safe shutdown should be enclosed in masonry or concrete towers with a minimum fire resistance rating of 2 hours and self-closing Class B fire doors.	C.5.a(6)	AC WA C	AP1000 deviates from this guideline with a design that meets applicable building codes and fire protection requirements. Auxiliary building stairwells are enclosed in towers constructed using both concrete structural walls and nonstructural walls, consisting of a concrete/steel composite material, having a fire resistance rating of at least 2 hours, and self-closing doors, having a rating of 1.5 hours. The two-hour fire-resistance test data for the concrete/steel composite material is in accordance with ASTM E-119 and NFPA 251 acceptance criteria to ensure that the stairwell fire-related enclosure will be maintained in accordance with Regulatory Position C.5.a.6 of BTP CMEB 9.5-1. There are no missile hazards in the vicinity of such stairwells. This alternative protection provides an equivalent level of safety as that prescribed in the BTP. Comply. Subsection 9A.3.3 addresses this requirement for miscellaneous buildings located in the yard.
56. Fire exit routes should be clearly marked.	C.5.a (7)	WA C	See Note 2 Comply. Subsection 9.5.1.2.1.1 addresses this requirement.
57. Each cable spreading room should contain only one redundant safety division.	C.5.a (8)	NA	There are no cable spreading rooms in AP1000.
58. Cable spreading rooms should be separated from each other and from other areas of the plant by barriers having a minimum fire resistance of 3 hours.	C.5.a (8)	NA	There are no cable spreading rooms in AP1000.
59. Interior wall and structural components, thermal insulation materials, radiation shielding materials, and soundproofing materials should be noncombustible.	C.5.a (9)	C	

Table 9.5.1-1 (Sheet 10 of 29)
AP1000 Fire Protection Program Compliance With BTP CMEB 9.5-1

BTP CMEB 9.5-1 Guideline	Paragraph	Comp[1]	Remarks
60. Interior finishes should be noncombustible.	C.5.a (9)	C	
61. Metal deck roof construction should be noncombustible and listed as "acceptable for fire" in the UL Building Materials Directory, or listed as Class I in the Factory Mutual Approval Guide.	C.5.a (10)	C	
62. Suspended ceilings and their supports should be of noncombustible construction.	C.5.a (11)	C	
63. Concealed spaces should be devoid of combustibles except as noted in Position C.6.b.	C.5.a(11)	AC	Underfloor or ceiling spaces, contain combustible cable insulation in the main control room, control support area and remote shutdown room. Fire detectors are provided in these areas. The cables used in the plant are qualified in accordance with the criteria specified in IEEE 1202. This alternative protection provides an equivalent level of safety as that specified in the BTP.
64. Transformers installed inside fire areas containing safety-related systems should be of the dry type or insulated and cooled with noncombustible liquid.	C.5.a(12)	C	
65. Outdoor oil-filled transformers should have oil containment features or drainage away from the buildings.	C.5.a(13)	C	
66. Outdoor oil-filled transformers should be located at least 50 feet distant from the building, or building walls within 50 feet of oil-filled transformers should be without openings and have a 3-hour fire resistance rating.	C.5.a (13)	C	
67. Floor drains sized to remove expected firefighting water flow without flooding safety-related equipment should be provided in areas where fixed water fire suppression systems are installed.	C.5.a (14)	C	
68. Floor drains should be provided in areas where hand hose lines may be used if such firefighting water could cause unacceptable damage to safety-related equipment.	C.5.a (14)	C	
69. Where gas suppression systems are installed, the drains should be provided with adequate seals, or the gas suppression system should be sized to compensate for the loss of the suppression agent through the drains.	C.5.a (14)	NA	No fixed gas suppression systems are used on AP1000.

Table 9.5.1-1 (Sheet 11 of 29)
AP1000 Fire Protection Program Compliance With BTP CMEB 9.5-1

BTP CMEB 9.5-1 Guideline	Paragraph	Comp[1]	Remarks
70. Drains in areas containing combustible liquids should have provisions for preventing the back flow of combustible liquids to safety-related areas through the interconnected drain systems.	C.5.a (14)	C	
71. Water drainage from areas that may contain radioactivity should be collected, sampled, and analyzed before discharge to the environment.	C.5.a(14)	WA C	See Note 2. Capability is provided. Comply. Capability is provided. Subsection 9.5.1.8.5 addresses this requirement.
Safe Shutdown Capability			
72. Fire damage should be limited so that one train of systems necessary to achieve and maintain hot shutdown conditions from either the main control room or emergency control station is free of fire damage.	C.5.b(1)	C	
73. Fire damage should be limited so that systems necessary to achieve and maintain cold shutdown from either the control room or emergency control station can be repaired within 72 hours.	C.5.b (1)	AC	Safe shutdown following a fire is defined for the AP1000 plant as the ability to achieve and maintain the reactor coolant system (RCS) temperature below 215.6°C (420°F) without uncontrolled venting of the primary coolant from the RCS. This is a departure from the criteria applied to the evolutionary plant designs, and the existing plants where safe shutdown for fires applies to both hot and cold shutdown capability. With expected RCS leakage, the AP1000 plant can maintain safe shutdown conditions for greater than 14 days. Therefore, repairs to systems necessary to reach cold shutdown need not be completed within 72 hours.

Table 9.5.1-1 (Sheet 12 of 29)
AP1000 Fire Protection Program Compliance With BTP CMEB 9.5-1

BTP CMEB 9.5-1 Guideline	Paragraph	Comp(1)	Remarks
74. Separation requirements for verifying that one train of systems necessary to achieve and maintain hot shutdown is free of fire damage.	C.5.b (2)	C	
75. Provision of alternative or dedicated shutdown capability in certain fire areas.	C.5.b (3)	AC	In Generic Letter (GL) 86-10, the staff stated its position that, for the purpose of analysis to Section III.G.2 of Appendix R to 10 CFR Part 50 criteria, the safe shutdown capability is defined as one of the two normal safe shutdown trains. The safety-related PXS and PCS are used to achieve and maintain safe shutdown following a fire and are acceptable as an alternative/ dedicated shutdown method for fire areas where the normal shutdown systems have not been protected in accordance with the guidance prescribed in the BTP.
76. Alternative or dedicated shutdown capability.	C.5.c	NC	In Generic Letter (GL) 86-10, the staff stated its position that, for the purpose of analysis to Section III.G.2 of Appendix R to 10 CFR Part 50 criteria, the safe shutdown capability is defined as one of the two normal safe shutdown trains. The safety-related PXS and PCS are used to achieve and maintain safe shutdown following a fire and are acceptable as an alternative/ dedicated shutdown method for fire areas where the normal shutdown systems have not been protected in accordance with the guidance prescribed in the BTP.

Table 9.5.1-1 (Sheet 13 of 29)
AP1000 Fire Protection Program Compliance With BTP CMEB 9.5-1

BTP CMEB 9.5-1 Guideline	Paragraph	Comp(1)	Remarks
			The criteria concerning cold shutdown capability deviates from the criteria applied to the evolutionary reactor designs, but is consistent with the criteria applicable to existing plants. To enhance the survivability of the normal safe shutdown and cold shutdown capability in the event of a fire, and to reduce the reliance on the infrequently utilized safety-related passive systems, automatic suppression or physical separation is provided in those fire areas outside containment where a fire could damage the normal shutdown capability. This criterion does not ensure that the normal shutdown capability will be free of fire damage, or that the equipment necessary to achieve and maintain cold shutdown can be repaired within 72 hours.
Control of Combustibles			
77. Safety-related systems should be separated from combustible materials where possible; where not possible, special protection should be provided to help prevent a fire from defeating the safety system function.	C.5.d (1)	C	Concentrations of combustible materials are located outside structures containing safety-related components. Where this is not possible, appropriate fire protection is provided (see Appendix 9A).
78. Bulk gas storage (compressed or cryogenic) should not be permitted inside structures housing safety-related equipment. Flammable gases should be stored outdoors or in separate detached buildings.	C.5.d (2)	AC	Breathing air storage tanks for the main control room habitability system are safety-related and are provided with overpressure protection. There is no other bulk gas storage in structures housing safety-related equipment.
79. High pressure gas storage containers should be located with the long axis parallel to building walls.	C.5.d (2)	C	

Table 9.5.1-1 (Sheet 14 of 29)
AP1000 Fire Protection Program Compliance With BTP CMEB 9.5-1

BTP CMEB 9.5-1 Guideline	Paragraph	Comp[1]	Remarks
80. Use of compressed gases inside buildings should be controlled.	C.5.d (2)	WA C	See Note 2 Comply. Subsection 9.5.1.8.4.g addresses this requirement.
81. The use of plastic materials should be minimized. Halogenated plastics such as polyvinyl chloride (PVC) and neoprene should be used only when substitute noncombustible materials are not available.	C.5.d (3)	C	
82. Storage of flammable liquids should comply with NFPA 30.	C.5.d (4)	C	See Note 3
83. Hydrogen lines in safety-related areas should be either designed to seismic Category I requirements, or sleeved, or equipped with excess flow valves.	C.5.d (5)	C	Hydrogen lines in safety-related areas are designed to seismic Category I requirements.
Electrical Cable Construction, Cable Trays, and Cable Penetrations			
84. Only metal should be used for cable trays.	C.5.e (1)	C	Cable trays are of all-metal construction.
85. Only metallic tubing should be used for conduit. Thin-wall metallic tubing should not be used.	C.5.e (1)	C	Conduit that is not buried or embedded in concrete is metallic.
86. Flexible metallic tubing should only be used in short lengths to connect components to equipment.	C.5.e (1)	C	
87. Other raceways should be made of noncombustible materials.	C.5.e (1)	C	
88. Redundant safety-related cable systems outside the cable spreading room should be separated from each other and from potential fire exposure hazards in nonsafety-related areas by 3-hour rated fire barriers.	C.5.e (2)	C	
89. These cable trays should be provided with continuous line-type heat detectors.	C.5.e (2)	C	
90. Cables should be designed to allow wetting down with fire suppression water without electrical faulting.	C.5.e (2)	C	
91. Redundant safety-related cable trays outside the cable spreading room should be accessible for manual firefighting. Manual hose stations and portable hand extinguishers should be provided.	C.5.e (2)	C	
92. Safety-related cable trays of a single division, which are separated from redundant divisions by a 3-hour rated fire barrier and are accessible for manual firefighting, should be protected from the effects of a potential exposure fire by providing automatic water suppression, unless specific conditions are met.	C.5.e (2)	C	Automatic water suppression is not provided because there is no significant exposure fire hazards and the specified conditions are met.

Table 9.5.1-1 (Sheet 15 of 29)
AP1000 Fire Protection Program Compliance With BTP CMEB 9.5-1

BTP CMEB 9.5-1 Guideline	Paragraph	Comp[1]	Remarks
93. Safety-related cable trays that are not accessible for manual firefighting should be protected by an automatic water system.	C.5.e (2)	AC	Safety-related cable trays outside containment are accessible for manual firefighting. Protection of safe shutdown components inside containment is discussed in Appendix 9A.
94. Safety-related cable trays that are not separated from redundant divisions by 3-hour rated fire barriers should be protected by automatic water suppression systems.	C.5.e (2)	AC	Protection of safe shutdown components inside containment and the main control room is discussed in Appendix 9A.
95. In areas where 3-hour fire barrier separation of redundant cable systems is precluded by overriding design considerations, the capability to achieve safe shutdown considering the effects of a fire involving fixed and transient combustibles should be evaluated with and without actuation of the automatic suppression system.	C.5.e (2)	C	
96. Electric cable construction should pass the flame test in IEEE Std 383.	C.5.e (3)	C	Use IEEE Standard 1202 or IEEE 383 excluding the option to use the alternate flame source, oil, or burlap.
97. Cable raceways should be used only for cables.	C.5.e (4)	C	
98. Miscellaneous storage and piping for combustible liquids or gases should not create a potential exposure hazard to safety-related systems.	C.5.e (5)	C	
Ventilation			
99. Smoke and corrosive gases should be discharged directly outside to an area that will not affect safety-related plant areas.	C.5.f (1)	C	
100. To facilitate manual firefighting, separate smoke and heat vents should be provided in certain areas.	C.5.f (1)	C	Smoke and heat venting capability is provided as described in Appendix 9A.
101. Release of smoke and gases containing radioactive materials to the environment should be monitored.	C.5.f (2)	C	
102. Any ventilation system designed to exhaust potentially radioactive smoke or gases should be evaluated to verify that inadvertent operation or single failures will not violate the radiologically controlled areas of the plant.	C.5.f (2)	C	
103. The power supply and control for mechanical ventilation systems should be run outside the fire area served by the system.	C.5.f (3)	C	
104. Engineered safety feature filters should be protected in accordance with the guidelines of Regulatory Guide 1.52.	C.5.f (4)	C	

Table 9.5.1-1 (Sheet 16 of 29)
AP1000 Fire Protection Program Compliance With BTP CMEB 9.5-1

BTP CMEB 9.5-1 Guideline	Paragraph	Comp[1]	Remarks
105. Air intakes for ventilation systems serving areas containing safety-related equipment should be located remote from the exhaust air outlets and smoke vents of other fire areas.	C.5.f (5)	C	
106. Stairwells should be designed to minimize smoke infiltration during a fire.	C.5.f (6)	C	Stair towers are provided with self-closing doors. Additional measures to minimize smoke infiltration to stair-wells are described in Appendix 9A.
107. Where total flooding gas extinguishing systems are used, ventilation dampers should be controlled in accordance with NFPA 12 and NFPA 12A.	C.5.f (7)	NA	Fixed flooding gas suppression systems are not used on AP1000.
Lighting and Communication			
108. Fixed self-contained lighting units with individual 8-hour battery power supplies should be provided in areas that must be manned for safe shutdown and for access and egress routes to and from all fire areas.	C.5.g (1)	AC	Alternate emergency lighting is provided for the main control room and the remote shutdown workstation as described in Subsection 9.5.3. Emergency lighting in other plant areas is provided by 8-hour battery-powered, fixed, self-contained units to provide safe ingress and egress of personnel and the operation of equipment following a fire, in the event of a loss of the normal lighting. Portable battery-powered lighting is provided for emergency use by plant personnel.
109. Sealed beam battery-powered portable hand lights should be provided for emergency use.	C.5.g (2)	C	
110. Fixed emergency communications, independent of the normal plant communication system, should be installed at preselected stations.	C.5.g (3)	C	
111. A portable radio communications system should be provided for use by the fire brigade and other operations personnel required to achieve safe plant shutdown.	C.5.g (4)	WA C	Comply. Subsections 9.5.1.8.1.2.a.3.v, 9.5.1.8.2.2, 9.5.2.2.5, and Subsections 9.5.2 and 9.5.2.2.1 address this requirement.

Table 9.5.1-1 (Sheet 17 of 29)
AP1000 Fire Protection Program Compliance With BTP CMEB 9.5-1

BTP CMEB 9.5-1 Guideline	Paragraph	Comp(1)	Remarks
Fire Detection			
112. Fire detection systems should be provided for areas that contain or present a fire exposure to safety-related equipment.	C.6.a (1)	C	
113. Fire detection systems should comply with the requirements of Class A systems as defined in NFPA 72D and Class I circuits as defined in NFPA 70.	C.6.a (2)	C	See Note 3
114. Fire detectors should be selected and installed in accordance with NFPA 72E.	C.6.a (3)	C	See Note 3
115. Testing of pulsed line-type heat detectors should demonstrate that the frequencies used will not affect the actuation of protective relays in other plant systems.	C.6.a (3)	C	
116. Fire detection systems should give audible and visual alarm and annunciation in the main control room.	C.6.a (4)	C	
117. Where zoned detection systems are used in a given fire area, local means should be provided to identify which zone has actuated.	C.6.a (4)	C	
118. Local audible alarms should sound in the fire area.	C.6.a(4)	C	
119. Fire alarms should be distinctive and unique so they will not be confused with any other plant system alarms.	C.6.a (5)	C	
120. Primary and secondary power supplies, which satisfy the provisions of Section 2220 of NFPA 72D, should be provided for the fire detection system and for electrically operated control valves for automatic suppression systems.	C.6.a (6)	C	See Note 3
Fire Protection Water Supply Systems			
121. An underground yard fire main loop should be installed to furnish anticipated water requirements.	C.6.b (1)	C	An underground yard fire main loop is provided in accordance with NFPA 24.
122. Type of pipe and water treatment should be design considerations with tuberculation as one of the parameters.	C.6.b (1)	C	
123. Means of inspecting and flushing the systems should be provided.	C.6.b (1)	C	Flushing of the loop can be accomplished through the use of sectional control valves to direct the flow and yard hydrants to serve as discharge points.

Table 9.5.1-1 (Sheet 18 of 29)
AP1000 Fire Protection Program Compliance With BTP CMEB 9.5-1

BTP CMEB 9.5-1 Guideline	Paragraph	Comp(1)	Remarks
124. Approved visually indicating sectional control valves should be provided to isolate portions of the yard fire main loop for maintenance or repair.	C.6.b (2)	C	Indicator valves are provided for sectionalized control and isolation of portions of the yard fire main loop.
125. Valves should be installed to permit isolation of outside hydrants from the fire main for maintenance or repair without interrupting the water supply to automatic or manual fire suppression systems.	C.6.b (3)	C	A visually indicating or key-operated valve is provided in each lateral from the yard fire main loop to a fire hydrant.
126. The fire main system piping should be separate from service or sanitary water system piping.	C.6.b (4)	C	
127. A common yard fire main loop may serve multi-unit nuclear power plant sites if cross-connected between units. Sectional control valves should permit maintaining independence of the loop around each unit.	C.6.b (5)	NA	See discussion of GDC 5 in subsection 3.1.1. The AP1000 is a single-unit plant.
128. A sufficient number of pumps should be provided so that 100 percent capacity will be available assuming failure of the largest pump or loss of offsite power.	C.6.b (6)	C	Two 100 percent capacity fire pumps (one diesel-driven and one electric motor-driven) are provided.
129. Individual fire pump connections to the yard fire main loop should be separated with sectionalizing valves between connections.	C.6.b (6)	C	
130. Each pump and its driver and controls should be separated from the remaining fire pumps by a 3-hour rated fire wall.	C.6.b (6)	C	
131. The fuel for the diesel fire pump should be separated so that it does not provide a fire source exposing safety-related equipment.	C.6.b (6)	C	
132. Alarms indicating pump running, driver availability, failure to start, and low fire main pressure should be provided in the main control room.	C.6.b (6)	C	
133. The fire pump installation should conform to NFPA 20.	C.6.b (6)	C	See Note 3
134. Outside manual hose installation should be sufficient to provide an effective hose stream to any onsite location where fixed or transient combustibles could jeopardize safety-related equipment. Hydrants should be installed approximately every 250 feet on the yard main system.	C.6.b (7)	C	
135. Recommendations for hose houses and hose carts.	C.6.b (7)	C	
136. Threads compatible with those used by local fire departments should be provided on all hydrants, hose couplings, and standpipe risers.	C.6.b (8)	C	

Table 9.5.1-1 (Sheet 19 of 29)
AP1000 Fire Protection Program Compliance With BTP CMEB 9.5-1

BTP CMEB 9.5-1 Guideline	Paragraph	Comp(1)	Remarks
137. Two separate, reliable freshwater supplies should be provided.	C.6.b (9)	C	Two water storage tanks are provided.
138. Recommendations for tanks used to supply fire protection water.	C.6.b (9)	C	See Note 3
139. Recommendations for common tank used to supply fire protection water and other system.	C.6.b (10)	C	The configuration of the water supply for the seismic standpipe system is described in Subsection 9.5.1.2.1. Both fire water supply tanks have a water volume that is dedicated for fire protection purposes. The fire pumps can be aligned through normally closed valves or through temporary connections to supply water for post-accident services. These include refilling of the passive containment cooling water supply tank or supplying the containment spray following a severe accident. This provides adequate defense in depth and will not adversely affect the performance of the fire protection water supply.
140. The fire water supply should be based on the largest expected flow rate for a period of 2 hours, but not less than 300,000 gallons.	C.6.b (11)	C	
141. The fire water supply should be capable of delivering the design demand over the longest route of the water supply systems.	C.6.b (11)	C	
142. Recommendations for freshwater lakes or ponds used to supply fire protection water.	C.6.b (12)	NA	Lakes or ponds are not utilized for fire protection water supply.
143. Recommendations concerning use of a common water supply for fire protection and the ultimate heat sink.	C.6.b (13)	C	
144. Recommendations concerning use of other water systems as the source of fire protection water.	C.6.b (14)	NA	The fire protection system does not rely on the operation of another water system as a second water source.

Table 9.5.1-1 (Sheet 20 of 29)
AP1000 Fire Protection Program Compliance With BTP CMEB 9.5-1

BTP CMEB 9.5-1 Guideline	Paragraph	Comp(1)	Remarks
Water Sprinkler and Hose Standpipe Systems			
145. Recommendations concerning connection of sprinkler systems and manual hose station standpipes to the yard fire main loop.	C.6.c (1)	AC	See remarks for Guideline 19.
146. Each sprinkler and standpipe system should be equipped with OS&Y gate valve or other approved shutoff valve and waterflow alarm.	C.6.c (1)	C	Waterflow alarms are provided for sprinkler and seismic standpipe systems only.
147. Safety-related equipment should be protected from sprinkler discharge if such discharge could result in unacceptable damage to the equipment.	C.6.c (1)	C	
148. Control and sectionalizing valves in the fire water systems should be electrically supervised (with indication in the main control room) or administratively controlled.	C.6.c (2)	C	
149. All valves in the fire protection system should be periodically checked to verify position.	C.6.c (2)	WA C	See Note 2 Comply. Subsection 9.5.1.8.6 addresses this requirement.
150. Fixed water extinguishing systems should conform to requirements of NFPA 13 and NFPA 15.	C.6.c (3)	AC	Automatic sprinkler systems are designed and installed in accordance with the criteria specified in NFPA 13, with the exception of providing individual fire department connections to each sprinkler system. Because the sprinkler systems are supplied by the plant's fire protection water supply, individual connections are not necessary. See Note 3.
151. Recommendations for interior manual hose installations.	C.6.c (4)	C	
152. Individual standpipes should be at least 4 inches in diameter for multiple hose connections and 2-1/2 inches in diameter for single hose connections.	C.6.c (4)	C	

Table 9.5.1-1 (Sheet 21 of 29)
AP1000 Fire Protection Program Compliance With BTP CMEB 9.5-1

BTP CMEB 9.5-1 Guideline	Paragraph	Comp(1)	Remarks
153. Standpipe and hose station installations should follow the requirements of NFPA 14.	C.6.c (4)	AC	Standpipes for each building are designed and installed in accordance with the criteria specified in NFPA 14 for Class III service except: (1) the water supply to the standpipe inside containment is manually operated, and (2) the containment isolation valves controlling the water supply to standpipes inside containment are not listed by independent testing laboratories for fire protection service. These exceptions will not adversely affect the performance of the hose station and standpipe system. See Note 3.
154. Hose stations should be located as dictated by the fire hazard analysis to facilitate access and use for firefighting operations.	C.6.c (4)	C	
155. Recommendations concerning seismic design of standpipes and hose connections.	C.6.c (4)	C	
156. Recommendations concerning hose nozzle selection.	C.6.c (5)	C	
157. The fire hose should be hydrostatically tested in accordance with NFPA 1962. Hoses stored in outside hose houses should be tested annually. The interior standpipe hose should be tested every 3 years.	C.6.c (6)	WA C	See Note 2 Comply. Subsection 9.5.1.8.6 addresses this requirement.
158. Consideration of foam suppression systems for flammable liquid fires.	C.6.c (7)	NA	Foam suppression systems are not used on AP1000.
Halon Suppression Systems			
159. Design and testing considerations for Halon fire suppression systems.	C.6.d	NA	Fixed Halon fire suppression systems are not used on AP1000.
Carbon Dioxide Suppression Systems			
160. Carbon dioxide suppression systems should comply with the requirements of NFPA 12.	C.6.e	NA	Fixed carbon dioxide suppression systems are not used on AP1000.
161. Automatic carbon dioxide systems should be equipped with a predischarge alarm system and a discharge delay to permit personnel egress.	C.6.e	NA	Fixed carbon dioxide suppression systems are not used on AP1000.
162. Provisions for locally disarming automatic carbon dioxide systems should be key locked and under administrative control. Disarming of systems should be controlled as described in Position C.2.	C.6.e	NA	Fixed carbon dioxide suppression systems are not used on AP1000.

Table 9.5.1-1 (Sheet 22 of 29)
AP1000 Fire Protection Program Compliance With BTP CMEB 9.5-1

BTP CMEB 9.5-1 Guideline	Paragraph	Comp(1)	Remarks
163. Considerations for design of carbon dioxide suppression systems.	C.6.e	NA	Fixed carbon dioxide suppression systems are not used on AP1000.
Portable Extinguishers			
164. Fire extinguishers should be provided in areas that contain, or could present a fire exposure hazard to, safety-related equipment in accordance with NFPA 10.	C.6.f	C	See Note 3
165. Dry chemical extinguishers should be installed with due consideration given to possible adverse effects on safety-related equipment.	C.6.f	C	
Primary and Secondary Containment			
166. Fire protection for the primary and secondary containment areas should be provided for hazards identified by the fire protection analysis.	C.7.a (1)	C	Fires are identified and fire suppression systems are provided accordingly.
167. Because of the general inaccessibility of primary containment during normal plant operation, protection should be provided by automatic fixed systems.	C.7.a (1)	AC	No automatic suppression systems are needed due to the sealless motor reactor coolant pumps (RCPs) having no external lube oil system. Automatic suppression is provided in one fire zone as described in Appendix 9A.
168. Operation of the fire protection systems should not compromise the integrity of the containment or other safety-related systems.	C.7.a(1)(a)	C	
169. Recommendations for protection of safety-related cables and equipment inside non-inerted containments.	C.7.a(1)(b)	AC	See Appendix 9A for a description of protection inside containment.
170. Recommendations concerning fire detection inside the primary containment.	C.7.a(1)©	C	
171. Standpipe and hose stations inside containment may be connected to a high quality water supply of sufficient quantity and pressure other than the fire main loop if plant-specific features prevent extending the fire main supply inside containment.	C.7.a(1)(d)	C	
172. Recommendations for reactor coolant pump oil collection systems in non-inerted containments.	C.7.a(1)(e)	NA	The reactor coolant pumps are sealless motor pumps and do not require an oil collection system.
173. For secondary containment areas, cable fire hazards that could affect safety should be protected as described in Position C.5.e.(2).	C.7.a (1)(f)	NA	

Table 9.5.1-1 (Sheet 23 of 29)
AP1000 Fire Protection Program Compliance With BTP CMEB 9.5-1

BTP CMEB 9.5-1 Guideline	Paragraph	Comp[1]	Remarks
174. Self-contained breathing apparatus should be provided near the containment entrances for firefighting and damage control personnel. These units should be independent of any breathing apparatus provided for general plant activities.	C.7.a (2)	WA C	See Note 2 Comply. Subsection 9.5.1.8.2.2 addresses this requirement.
Main Control Room Complex			
175. The main control room complex should be separated from other areas of the plant by 3-hour rated fire barriers.	C.7.b	C	
176. Recommendations concerning peripheral rooms in the main control room complex.	C.7.b	NC	The MCR/tagging room wall is not fire-rated based on other design criteria. Manual fire suppression is provided for peripheral rooms. See Appendix 9A.
177. Recommendations concerning the use of Halon and carbon dioxide flooding systems.	C.7.b	NA	No Halon or carbon dioxide flooding systems are used on AP1000.
178. Recommendations concerning manual firefighting capability in the main control room.	C.7.b	C	
179. Recommendations concerning fire detection in the main control room.	C.7.b	NC	Smoke detectors are not provided in cabinets and consoles. The control room is continuously occupied so that a fire is promptly detected and extinguished.
180. Breathing apparatus for main control room operators should be readily available.	C.7.b	WA C	See Note 2 Comply. Subsection 6.4.2.3 addresses this requirement.
181. Recommendations concerning main control room ventilation.	C.7.b	C	
182. Cables that enter the main control room should terminate in the main control room.	C.7.b	C	
183. Cables in underfloor and ceiling spaces should meet the separation criteria necessary for fire protection.	C.7.b	C	
184. Air-handling functions should be ducted separately from cable runs in such spaces.	C.7.b	NC	The underfloor space is used as a distribution plenum for ventilation of the main control room. Smoke detectors in the underfloor space cause prompt closure of combination fire/smoke dampers to shut off air flow.

Table 9.5.1-1 (Sheet 24 of 29)
AP1000 Fire Protection Program Compliance With BTP CMEB 9.5-1

BTP CMEB 9.5-1 Guideline	Paragraph	Comp(1)	Remarks
185. Fully enclosed electrical raceways located in underfloor and ceiling spaces, if over 1 ft^2 in cross-sectional area, should have automatic fire suppression inside.	C.7.b	NA	AP1000 does not have enclosed raceways in the control complex with a cross-sectional area greater than 1 ft^2.
186. Recommendations concerning automatic fire suppression in underfloor and ceiling spaces.	C.7.b	NC	Manual fire suppression is to be used for underfloor and ceiling spaces. The control room is continuously occupied so that a fire is promptly detected and extinguished.
187. There should be no carpeting in the control room. Where carpeting has been installed (e.g., for sound abatement or other human factors), the carpeting should be tested to standards such as ASTM D2859, “Standard Test Method for Flammability of Finished Textile Floor Covering Materials,” to establish the flammability characteristics of the material. These characteristics should be addressed in the fire hazards analysis.	C.7.b	C	Carpeting will be installed in the MCR for sound abatement as allowed per the guidance of Revision 1 of RG 1.189. Per the guidelines, the carpeting will be tested to standards such as ASTM D2859, “Standard Test Method for Flammability of Finished Textile Floor Covering Materials,” to establish the flammability characteristics of the material. These characteristics are addressed in the fire hazards analysis.
Cable Spreading Room			
188. Design guidelines for the cable spreading room.	C.7.c	NA	There is no cable spreading room in AP1000.
189. Recommendations concerning fire protection for computers performing safety-related functions.	C.7.d	C	The data display and processing system does not perform safety-related functions.
190. Nonsafety-related computers outside the control room should be separated from safety-related areas by 3-hour rated fire barriers and should be protected as needed to prevent damage to safety-related equipment.	C.7.d	C	

Table 9.5.1-1 (Sheet 25 of 29)
AP1000 Fire Protection Program Compliance With BTP CMEB 9.5-1

BTP CMEB 9.5-1 Guideline	Paragraph	Comp(1)	Remarks
Switchgear Rooms			
191. Switchgear rooms containing safety-related equipment should be separated from the remainder of the plant by 3-hour rated fire barriers. Redundant switchgear safety divisions should be separated from each other by 3-hour rated fire barriers.	C.7.e	C	The electrical equipment and penetration rooms associated with each safety-related division are separated from the rooms associated with other divisions and from the remaining areas of the plant by 3-hour rated fire barriers.
192. Automatic fire detectors should alarm locally and alarm and annunciate in the main control room.	C.7.e	C	
193. Fire hose stations and portable fire extinguishers should be readily available outside the switchgear rooms.	C.7.e	C	
194. Drains should be provided to prevent water accumulation from damaging safety-related equipment.	C.7.e	C	
195. Remote manually actuated ventilation should be provided for venting smoke when manual fire suppression effort is needed.	C.7.e	C	See Subsection 9.4.1 for a description of smoke removal capability for Class 1E equipment rooms.
Remote Safety-Related Panels			
196. Recommendations concerning separation and electrical isolation of remote safety-related panels.	C.7.f	C	
197. The general area housing remote safety-related panels should be provided with automatic fire detectors that alarm locally and alarm and annunciate in the main control room. Combustible materials should be controlled and limited to those required for operation. Portable extinguishers and manual hose stations should be readily available in the general area.	C.7.f	C	
Safety-Related Battery Rooms			
198. Safety-related battery rooms should be separated from each other and other areas of the plant by 3-hour rated fire barriers.	C.7.g	C	Safety-related battery rooms are separated from associated electrical rooms of the same division by 1-hour rated fire barriers.
199. Dc switchgear and inverters should not be located in safety-related battery rooms.	C.7.g	C	
200. Automatic fire detection should be provided to alarm locally and annunciate in the main control room.	C.7.g	C	
201. Ventilation systems in the battery rooms should be capable of maintaining the hydrogen concentration below 2 percent.	C.7.g	C	

Table 9.5.1-1 (Sheet 26 of 29)
AP1000 Fire Protection Program Compliance With BTP CMEB 9.5-1

BTP CMEB 9.5-1 Guideline	Paragraph	Comp(1)	Remarks
202. Main loss of ventilation should be alarmed in the main control room.	C.7.g	C	
203. Portable extinguishers and manual hose stations should be readily available outside the battery rooms.	C.7.g	C	
Turbine Building			
204. The turbine building should be separated from adjacent structures containing safety-related equipment by 3-hour rated fire barriers.	C.7.h	C	
205. The fire barriers should be designed to maintain structural integrity in the event of collapse of the turbine structure.	C.7.h	C	
206. Openings and penetrations in the fire barrier should be minimized and should not be located where the turbine oil system or generator hydrogen cooling system creates a fire exposure hazard to the barrier.	C.7.h	C	
Diesel Generator Areas			
207. Diesel generators should be separated from each other and from other areas of the plant by 3-hour rated fire barriers.	C.7.i	AC	The standby diesel generators are separated from each other by a 3-hour rated fire barrier and are housed in a separate structure, remote from safety-related areas. The ancillary diesel generators are separated from other areas of the plant by 3-hour rated fire barriers. The ancillary diesel generators are not separated from each other, but can be easily replaced with transportable diesel generators.
208. Automatic fire suppression should be installed to combat diesel generator or lubricating oil fires. Such systems should be designed for operation when the diesel is running without affecting the diesel.	C.7.i	C	
209. Automatic fire detection should be provided to alarm locally and annunciate in the main control room.	C.7.i	NC	Automatic detection is provided for the diesel generator service modules only. The dry pipe sprinklers provide detection in the diesel generator and fuel storage rooms. This does not adversely affect safety.
210. Portable extinguishers and manual hose stations should be readily available outside the area.	C.7.i	C	

Table 9.5.1-1 (Sheet 27 of 29)
AP1000 Fire Protection Program Compliance With BTP CMEB 9.5-1

BTP CMEB 9.5-1 Guideline	Paragraph	Comp(1)	Remarks
211. Drainage for firefighting water and means for local manual venting of smoke should be provided.	C.7.i	C	
Diesel Fuel Oil Storage Areas			
212. Day tanks with total capacity up to 1100 gallons are permitted in the diesel generator area under specified conditions.	C.7.i	NC	Each DG day tank has a total capacity of up to 1500 gallons. Separate 3-hour enclosures and automatic suppression are provided. Tanks are located more than 50 feet from buildings containing safety-related equipment.
213. The day tank should be located in a separate enclosure with a 3-hour fire rating.	C.7.i	AC	The fuel supply for the ancillary diesel generators is not separated from the diesels by a barrier. The ancillary diesels and the tank are separated from the rest of the plant by an enclosure with a 3-hour fire rating.
214. The day tank enclosure should be capable of containing the entire contents of the tank.	C.7.i	C	
215. The day tank enclosure should be protected by an automatic fire suppression system.	C.7.i	C	
216. Recommendations concerning diesel fuel oil tanks.	C.7.j	C	
217. Above-ground tanks should be protected by an automatic fire suppression system.	C.7.j	AC	The diesel fuel oil storage tanks are well-separated from each other and from safety-related structures. Automatic fire suppression systems are not provided.
Safety Related Pumps			
218. Design guidelines for safety-related pump rooms.	C.7.k	NA	There are no safety-related pumps on AP1000.
New Fuel Area			
219. Recommendations for fire protection of the new fuel area.	C.7.l	C	
Cooling Towers			
Spent Fuel Pool Areas			
220. Protection should be provided by hose stations and portable extinguishers.	C.7.m	C	
221. Automatic fire detection should be provided to alarm locally and annunciate in the main control room.	C.7.m	C	

Table 9.5.1-1 (Sheet 28 of 29)
AP1000 Fire Protection Program Compliance With BTP CMEB 9.5-1

BTP CMEB 9.5-1 Guideline	Paragraph	Comp(1)	Remarks
Radwaste and Decontamination Areas			
222. Fire barriers, automatic fire suppression and detection, and ventilation controls should be provided.	C.7.n	C	Automatic fire suppression is provided for specific areas in accordance with the fire protection analysis.
Safety-Related Water Tanks			
223. Fire protection provisions for safety-related water tanks.	C.7.o	C	
Records Storage Areas			
224. Records storage areas should be so located and protected that a fire in these areas does not expose safety-related systems or equipment.	C.7.p	C	
225. Cooling towers should be of noncombustible construction or so located and protected that a fire will not adversely affect any safety-related systems or equipment.	C.7.q	WA C	The cooling tower configuration is site-specific. See Note 2 Comply. Subsection 9A.3.3 addresses this requirement.
226. Cooling towers should be of noncombustible construction when the basins are used for the ultimate heat sink or for the fire protection water supply.	C.7.q	NA	The cooling tower basin is not used for an ultimate heat sink or as a source of fire water.
Miscellaneous Areas			
227. Location and protection of miscellaneous areas.	C.7.r	C	
Storage of Acetylene-Oxygen Fuel Gases			
228. Gas cylinder storage locations should not be in areas that contain or expose safety-related equipment or the fire protection systems that serve those safety-related areas.	C.8.a	WA C	See Note 2 Comply. Subsection 9.5.1.8.4.g addresses this requirement.
229. A permit system should be required to use this equipment in safety-related areas of the plant.	C.8.a	WA C	See Note 2 Comply. Subsection 9.5.1.8.4.g addresses this requirement.
Storage Areas for Ion Exchange Resins			
230. Unused ion exchange resins should not be stored in areas that contain or expose safety-related equipment.	C.8.b	WA C	See Note 2 Comply. Subsection 9.5.1.8.4.a addresses this requirement.
Hazardous Chemicals			
231. Hazardous chemicals should not be stored in areas that contain or expose safety-related equipment.	C.8.c	WA C	See Note 2 Comply. Subsection 9.5.1.8.4.h addresses this requirement.

Table 9.5.1-1 (Sheet 29 of 29)
AP1000 Fire Protection Program Compliance With BTP CMEB 9.5-1

BTP CMEB 9.5-1 Guideline	Paragraph	Comp(1)	Remarks
Materials Containing Radioactivity			
232. Materials that collect and contain radioactivity should be stored in closed metal tanks or containers that are located in areas free from ignition sources or combustibles.	C.8.d	C	
233. These materials should be protected from exposure to fires in adjacent areas.	C.8.d	C	
234. Consideration should be given to requirements for removal of decay heat from entrained radioactive materials.	C.8.d	C	

Notes:

1. Compliance with NUREG-0800 Subsection 9.5.1, Branch Technical Position CMEB 9.5-1 is indicated by the following codes:
   - WA - Will Address: Per Subsection 9.5.1.9.3.
   - C - Compliance: AP1000 is committed to compliance with the guideline.
   - AC - Alternate Compliance: compliance with the guideline by alternate means or intent. Alternative means or design are provided in the remarks column.
   - N/A - Not Applicable: The guideline is not applicable to AP1000.
   - NC - Not in Compliance: AP1000 is not in compliance (explanations in the remarks column.)
2. Procedures and administrative controls governing the fire protection program during plant operation, as well as responsibilities and organizational details for personnel involved in fire protection activities, are discussed in subsection 9.5.1.8.
3. It is intended to fully comply with NFPA standards referenced in Subsection 9.5.5, as they apply to AP1000. However, due to conflicting design considerations, there may be a need to take exception to specific guidance. Known exceptions to NFPA requirements are identified in Table 9.5.1-3. Subsection 9.5.1.8 addresses updating the list of NFPA exceptions after design certification, if necessary.

Table 9.5.1-2
Component Data - Fire Protection System
(Nominal Values)

Fire Water Storage Tanks	
Primary Fire Water Tank	
Nominal capacity (gal)	325,000
Volume dedicated to fire protection (gal)	300,000
Design Pressure	Atmospheric
Material	Carbon steel
Secondary Fire Water Tank	
Nominal capacity (gal)	490,000
Volume dedicated to fire protection (gal)	300,000
Design Pressure	Atmospheric
Material	Carbon steel
Fire Pumps	
Motor-Driven	
Pump type	Horizontal centrifugal
Rated flow (gpm)	2000
Required head, approximate (ft)	300
Structural material	Cast iron
Diesel-Driven	
Pump type	Horizontal centrifugal
Rated flow (gpm)	2000
Required head, approximate (ft)	300
Structural material	Cast iron
Fuel tank capacity (min. gal)	240
Motor-Driven Jockey Pump	
Pump type	Centrifugal
Rated flow (gpm)	30
Required head, approximate (ft)	210
Structural material	Cast iron
Containment Spray Nozzles	
Type	Lechler (SPRACO) 1713A
Number	68
Rated flow (gpm)	15.2
Rated pressure design (psi)	40
Structural material	Stainless steel

Table 9.5.1-3 (Sheet 1 of 2)
Exceptions to NFPA Standard Requirements

Requirement	AP1000 Exception or Clarification
NFPA 13 Sections 5-14.1.1.2 and 5-15.2 require fire department connections to individual sprinkler system headers, with no intervening shutoff valves.	Individual connections are not provided. Sprinkler systems are supplied from the proprietary fire water supply system, which can be accessed by the fire department at any hydrant along the yard main. Valves between these connection points and the sprinkler systems are electrically supervised or locked open.
NFPA 14 Section 2-5 requires that listed valves be used to control connections to standpipes.	Containment isolation valves controlling the water supply to standpipes inside containment are nuclear safety-related and meet or exceed the requirements for listed valves.
NFPA 14 Section 3-5 prohibits use of dry standpipes for Class II or Class III systems, and in areas not subject to freezing.	The standpipe system inside containment is classified as a dry standpipe system because it is normally isolated by the outboard containment isolation valve as described in Subsection 9.5.1.2.1.5.
NFPA 14 Section 3-6.1 requires listed dial spring pressure gauges at specific locations.	Pressure instruments with remote readout at fire protection system panels are provided. These instruments meet or exceed the requirements for listed gauges.
NFPA 14 Section 4-2.2 requires an isolation valve for each standpipe.	One valve is used to isolate two or more short standpipes that supply a small number of hose stations.
NFPA 14 Sections 4-3 and 5-12 require fire department connections for each standpipe system, with no intervening shutoff valves.	Individual connections are not provided. Standpipe systems are supplied from the proprietary fire water supply system, which can be accessed by the fire department at any hydrant along the yard main. Valves between these connection points and the standpipe systems are electrically supervised or locked open, except as described in Subsection 9.5.1.2.1.5.
NFPA 14 Section 5-3.2 requires Class I hose connections at each intermediate landing of exit stairways, on each side of horizontal exit openings, in each exit passageway, and on the roof or at the highest landing of stairways.	Class I hose connections are provided in exit stairways at one intermediate landing between most floors, and at other protected exit locations accessible to firefighters entering the buildings from outside. Flow testing of Class I hose connections is accomplished without providing additional connections on the roofs of buildings or at the highest stairway landings.
NFPA 14 Section 5-5 requires standpipes to be interconnected at the bottom, and when supplied by elevated tanks, also at the top.	Standpipes interconnections are constrained by layout considerations and do not always meet these requirements. Each standpipe receives an adequate water supply at an adequate pressure.
NFPA 14 Section 5-11.2 requires a separate drain connection for each standpipe.	For standpipes located outside radiologically controlled areas and supplied at an elevation above the lowest hose connection, the hose connection is used to provide a means of draining the standpipe.

Table 9.5.1-3 (Sheet 2 of 2)
Exceptions to NFPA Standard Requirements

Requirement	AP1000 Exception or Clarification
NFPA 22 contains requirements for water tanks and supply lines for private fire protection.	The seismic standpipe system is normally supplied from the passive containment cooling system (PCS) water storage tank as described in Subsection 9.5.1.2.1.5. The passive containment cooling system tank and supply line are not designed to NFPA 22 but meet or exceed the applicable requirements of that standard.
NFPA 804 (Reference 211) contains requirements specific to light water reactors.	Compliance with portions of this standard is as identified within Section 9.5.1 and WCAP-15871.

Table 9.5.1-4
Capabilities Used to Achieve Cold Shutdown Following a Fire

Function	System Capability	Fire Protection
RCS Reactivity Control – Short Term – Long Term	 – Control Rods – (1)	 – separation (6) – (1)
RCS Makeup	– (1)	– (1)
RCS Pressure Control – Increase – Decrease	 – Pressurizer heaters – (2)	 – fire suppression – (2)
Decay Heat Removal (high temperature)	– SFW pumps feeding CST water to SG – SG PORV discharge to atm.	– fire suppression – separation
Decay Heat Removal (cold temperature)	– RNS pumps circulating RCS – CCS cooling RNS – SWS cooling CCS	– separation – fire suppression – fire suppression
Decay Heat Removal (cold temperature alternate)	– RNS pump circulating RCS – FPS cooling RNS (7)	– separation – fire suppression
Process Monitoring	– RCS monitoring instruments (PMS) – Non-1E Instrumentation and Control (3)	– separation – fire suppression or separation
Support Systems	– Instrument Air – Standby Diesel Generators – Non-1E AC Power and Control (3)	– fire suppression – fire suppression and separation – fire suppression or separation

Notes:

(1) CVS makeup from the BAT provides RCS makeup and boration. Automatic suppression is provided in the CVS makeup pump room and in the Non-Class 1E equipment/penetration room. If the CVS is damaged by a fire, one CMT can provide this capability.

(2) CVS auxiliary spray provides pressurizer pressure reduction. Automatic suppression is provided in the CVS makeup pump room and in the Non-Class 1E equipment/penetration room. If the CVS is damaged by a fire, one ADS stage 1 valve used in a low capacity throttled vent mode of operation can slowly depressurize the RCS without loss of RCS pressure boundary.

(3) The portions of the non-1E AC power and the non-1E instrumentation and control system required are those needed to operate cold shutdown components; local control is sufficient (switchgear/control cabinet).

(4) Portions of the non-1E heating and ventilating systems are required to ventilate the main control room, non-1E switchgear rooms, and the required portions of the non-1E instrumentation and control system (see note 3).

(5) The term "separation" means that fire barriers provide separation of redundant components, including equipment, electrical cables, instrumentation and controls, except in the main control room, remote shutdown room, and containment. See Subsection 9A.3.1.1 for discussion on containment and Subsection 9A.3.1.2.5 for discussions on the main control room and remote shutdown room.

(6) Separation is provided for the reactor trip function. The reactor trip breakers are separated.

(7) Connection is provided to allow the fire protection system to furnish water to cool a normal residual heat removal (RNS) pump and heat exchanger following a fire that disables the normal CCS cooling function.

Table 9.5.2-1
Communication Equipment(1) and Locations

Provided for Operator Transient Response(2)
in Addition to Main Control Room and Remote Shutdown Room

Area Locator	Elevation	Primary Area/Location Served
1212	66′-6″	Divisions A, B, C, D Battery Rooms
1222	82′-6″	Divisions A, B, C, D dc Equipment Rooms
1121	96′-0″	Passive Core Cooling System Valve/Accumulator Rooms and Steam Generator
1123		Compartments
1124		
1231	100′-0″	Divisions A and C, I&C Rooms; Divisions B and D, I&C/Penetration Rooms; Valve/Piping Penetration Room
1234	107′-2″	Maintenance Floor Staging Area
1134	107′-2″	Maintenance Floor
1132		
1243	117′-6″	Non-1E Equipment/Penetration Room
1254	135′-3″	Access Corridor Serving Personnel Access Area
1151	135′-3″	Operating Deck
1152		
1251	135′-3″	MSIV Compartments
1162	159′-7″	Steam Generator Feedwater Nozzle Area
4014	100′-0″	Communications Room

Notes:
(1) Stations have Telephone/Page, PABX, and maintenance sound-power capability.
(2) See Standard Review Plan 9.5.2.

Table 9.5.4-1 (Sheet 1 of 2)
Nominal Component Data
Standby Diesel Fuel Oil System

Above Ground Storage Tanks	
Service	Diesel engine supply
Quantity	2
Type	Vertical, cylindrical
Total available fuel capacity (gal) per tank	60,000
Available fuel reserved for diesel generator (gal) per tank	55,000
Excess fuel available for testing (gal) per tank	5,000
Operating pressure	Atmospheric
Operating temperature	Ambient
Diesel Oil Transfer System	
Fuel Oil Transfer Pumps	
Quantity	2
Type	Gear, positive displacement
Operating Flow (gpm)	8
Required design capacity (gpm)	30
Fuel Oil Strainer	
Quantity	2
Type	Duplex
Design Capacity (gpm)	30
Fuel Oil Heater	
Quantity	2
Type	Electric
Rating @30 gpm	90 kw
Fuel Oil Water Separator	
Quantity	2
Type	Pressurized/coalesced
Design Capacity (gpm)	30
Duplex Filters	
Quantity	2
Type	Duplex/stacked disc
Design Capacity (gpm)	30
Diesel Fuel Oil Day Tanks	
Quantity	2
Type	Horizontal, cylindrical
Minimum Design Capacity (gal)	1300
Available capacity (gal)	1200
Operating pressure	Atmospheric
Code	Non-Stamped ASME VIII

Table 9.5.4-1 (Sheet 2 of 2)
Nominal Component Data
Standby Diesel Fuel Oil System

Ancillary Diesel Fuel Oil Tank	
Quantity	1
Type	Horizontal, cylindrical
Minimum Design Capacity (gal)	650
Available capacity (gal)	625
Operating pressure	Atmospheric
Code	Non-Stamped ASME VIII

Table 9.5.4-2
Indicating and Alarm Devices - Standby Diesel Fuel System

Parameter	Indication		Alarm	
	Control Room	Local	Control Room	Local
Fuel Oil Storage Tank Level - Diesel Oil (DO) Transfer	Yes	Yes	Yes	Yes
DO Day Tank Level	Yes	Yes	Yes	Yes
DO Transfer Pump Motor-Running Indication	Yes	Yes	No	No
DO Low Fuel Oil Pressure	Yes	Yes	Yes(1)	Yes
DO Water Separator Differential Pressure	Yes	Yes	Yes(1)	Yes
DO Filter Differential Pressure	Yes	Yes	Yes(1)	Yes
DO Pump Suction Strainer Differential Pressure	Yes	Yes	Yes(1)	Yes
DO Fuel Oil Heater in Service	Yes	Yes	Yes(1)	Yes
DO Fuel Oil Heater Temp Out	Yes	Yes	Yes(1)	Yes
Fuel Oil Tank Fill Strainer Differential Pressure	No	Yes	No(1)	Yes

Notes:
(1) Combined trouble alarm in control room

Table 9.5-201
Not Used

Table 9.5-202
Not Used

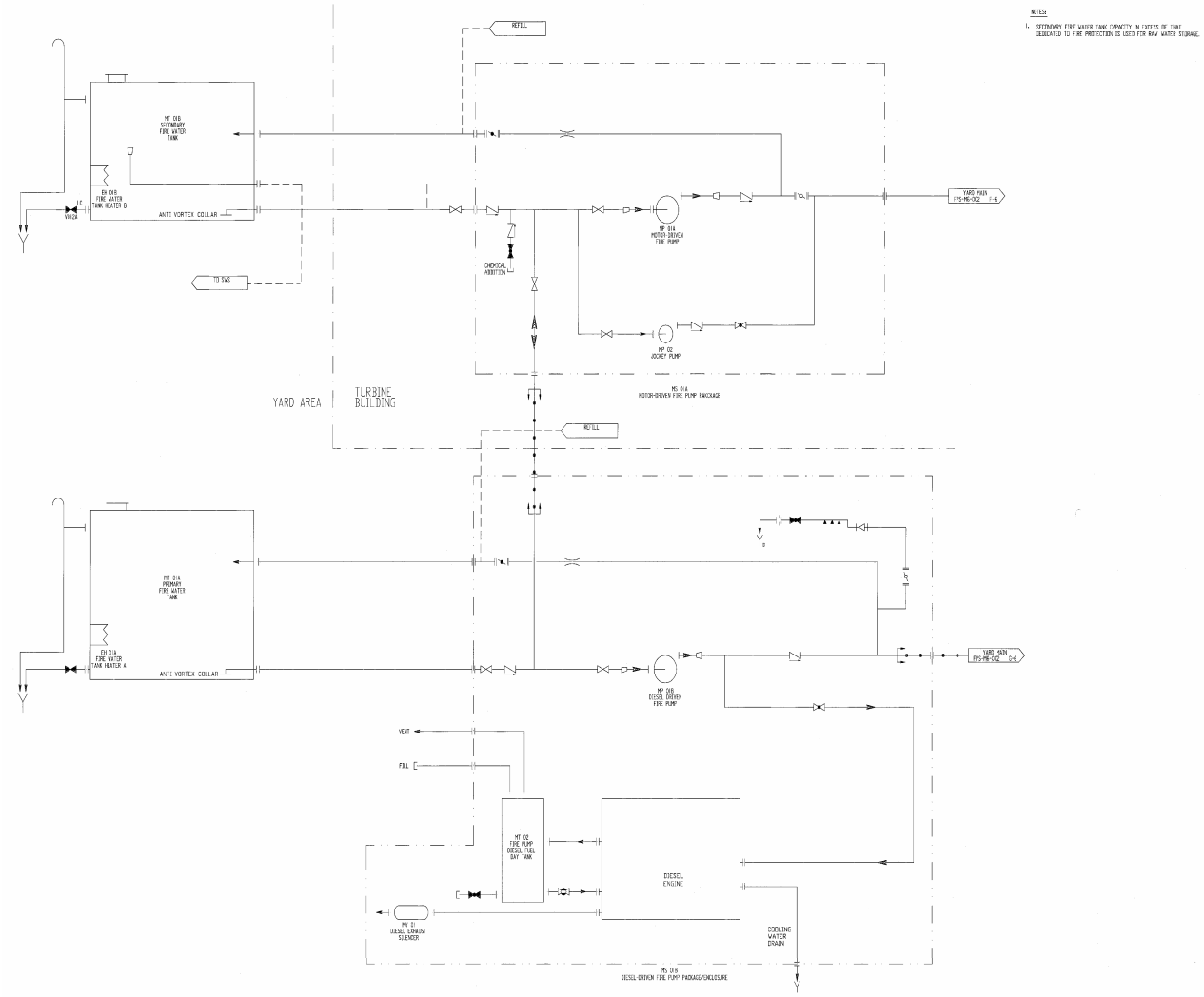

Figure represents system functional arrangement. Details internal to the system may differ as a result of implementation factors such as vendor-specific component requirements.

Figure 9.5.1-1 (Sheet 1 of 3)
Fire Protection System
Piping and Instrumentation Diagram
(REF FPS 001)

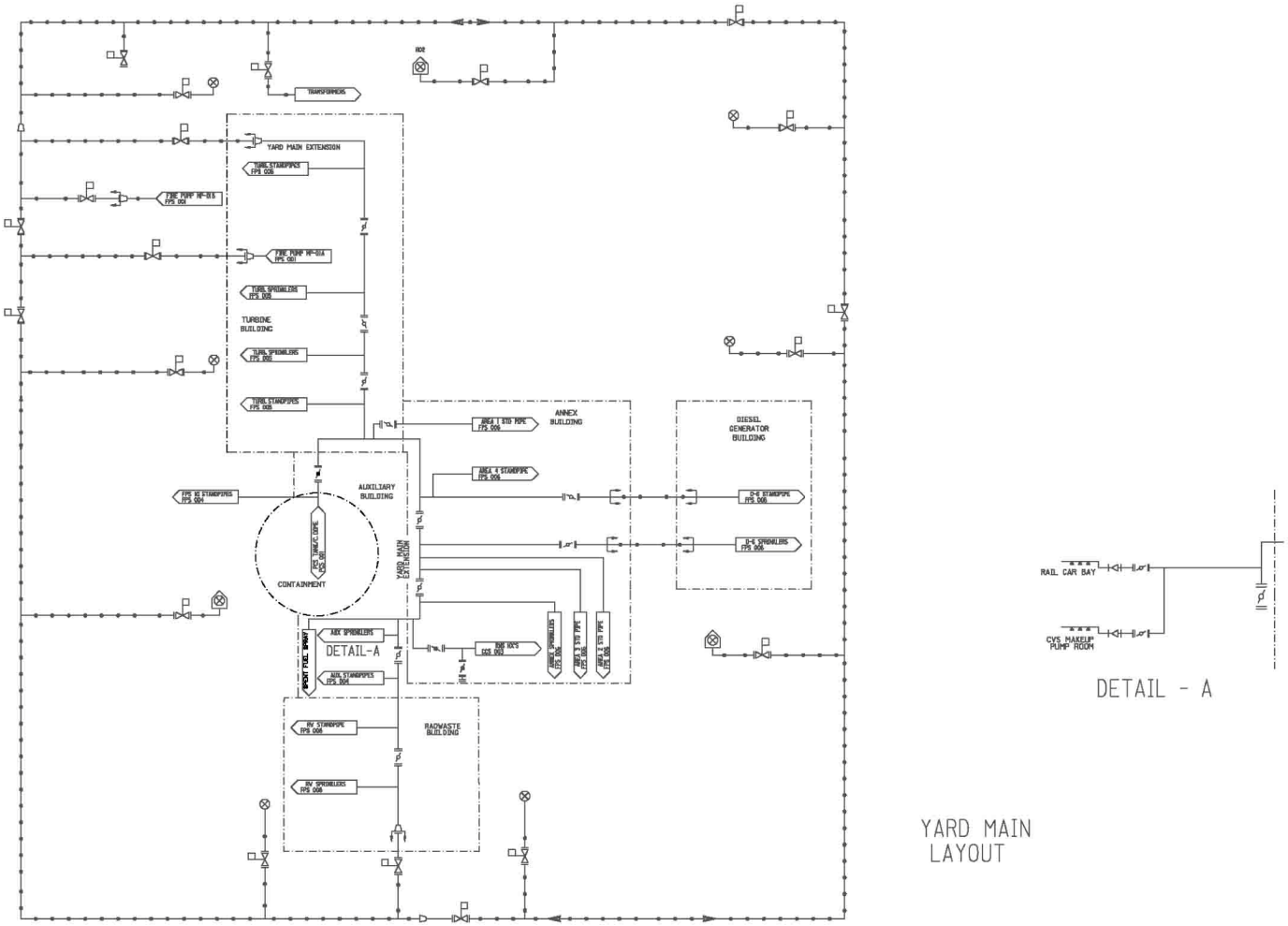

Figure represents system functional arrangement. Details internal to the system may differ as a result of implementation factors such as vendor-specific component requirements.

Figure 9.5.1-1 (Sheet 2 of 3)
Fire Protection System
Piping and Instrumentation Diagram
(REF) FPS 002, 004

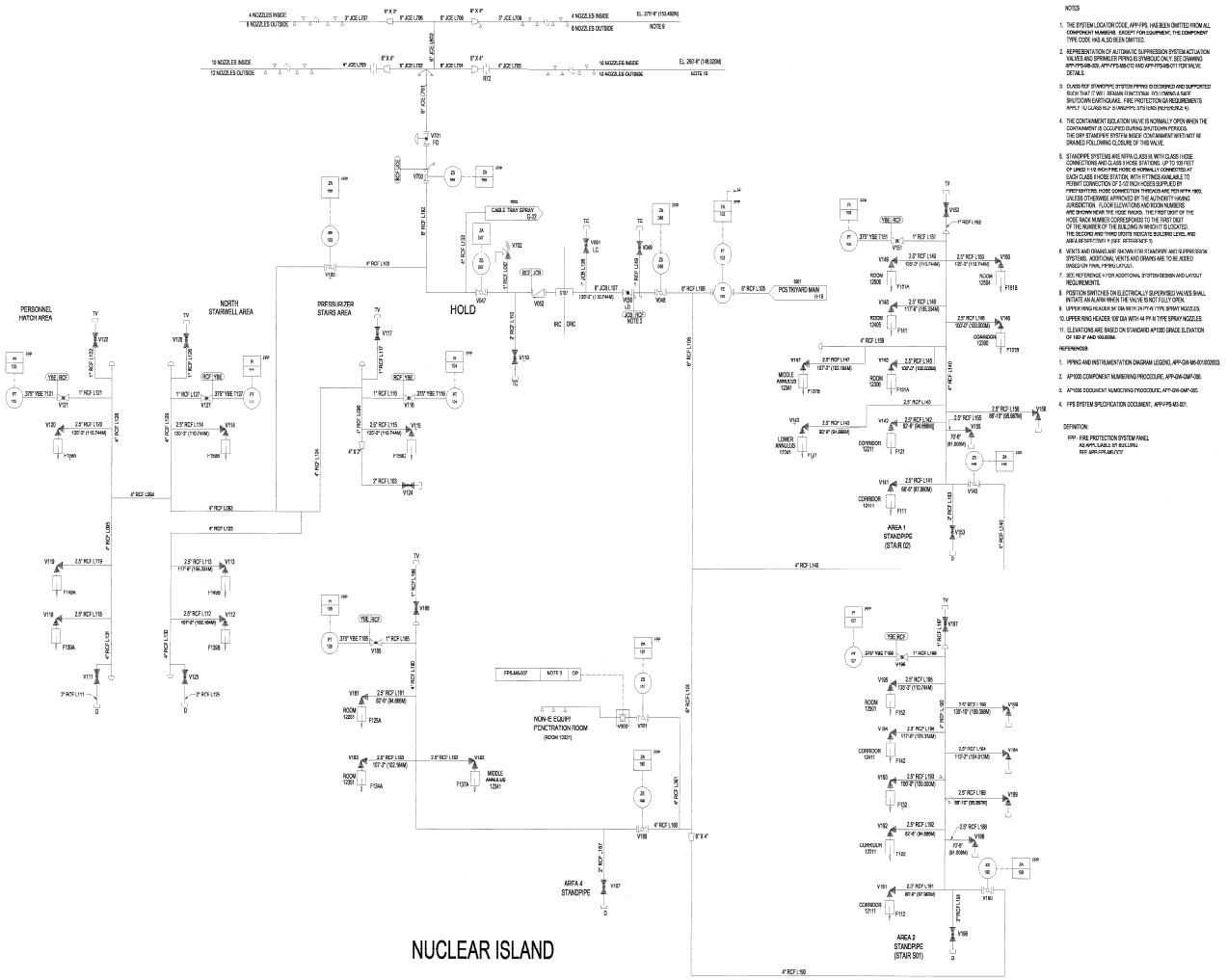

Figure represents system functional arrangement. Details internal to the system may differ as a result of implementation factors such as vendor-specific component requirements.

Figure 9.5.1-1 (Sheet 3 of 3)
Fire Protection System
Piping and Instrumentation Diagram
(REF FPS 004)

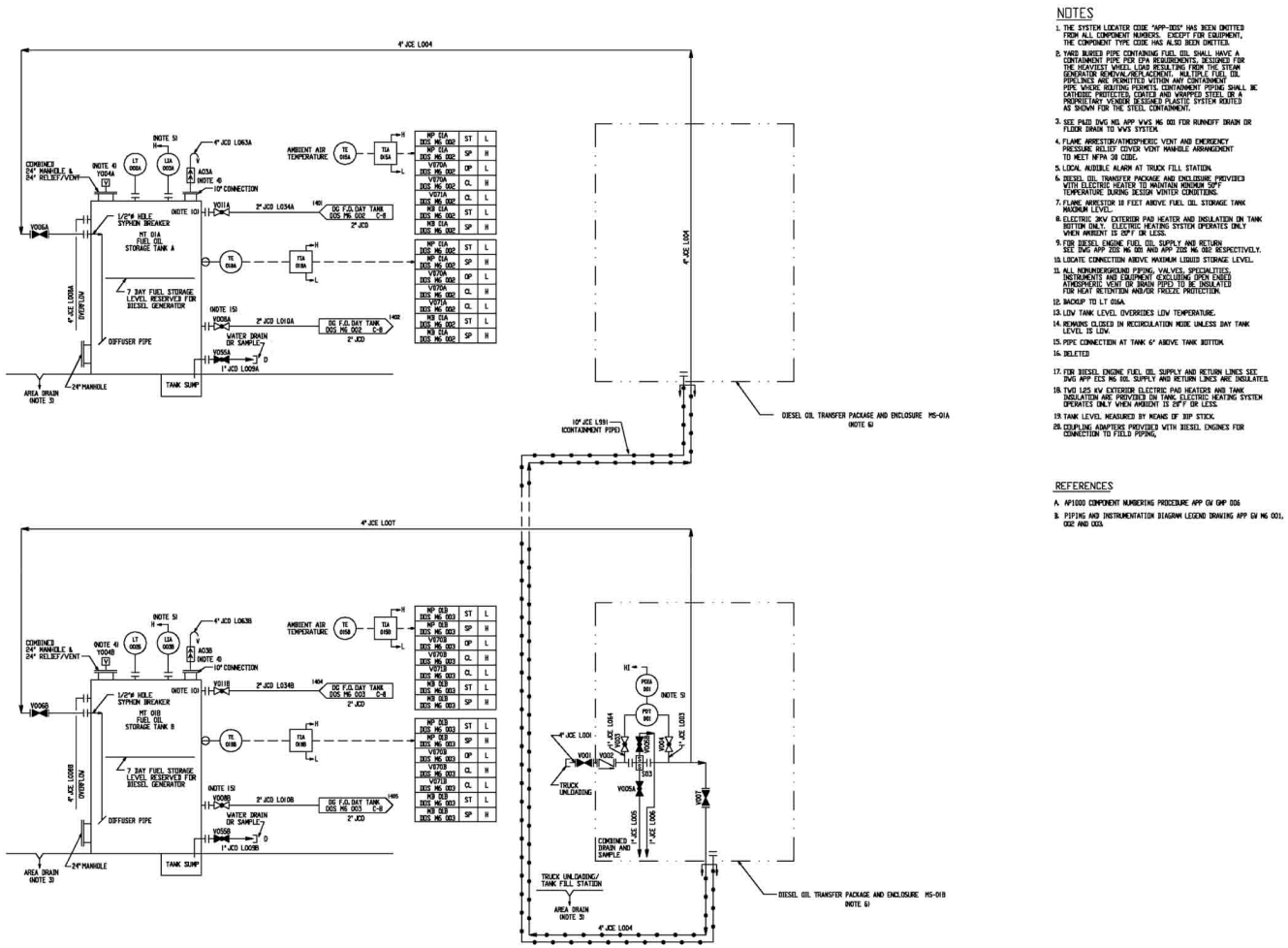

NOTES

1. THE SYSTEM LOCATER CODE "APP-DOS" HAS BEEN OMITTED FROM ALL COMPONENT NUMBERS. EXCEPT FOR EQUIPMENT, THE COMPONENT TYPE CODE HAS ALSO BEEN OMITTED.
2. YARD BURIED PIPE CONTAINING FUEL OIL SHALL HAVE A CONTAINMENT PER FOR EPA REQUIREMENTS. DESIGNED FOR THE HEAVIEST WHEEL LOAD RESULTING FROM THE STEAM GENERATOR REMOVAL/REPLACEMENT. MULTIPLE FUEL OIL PIPELINES ARE PERMITTED WITHIN APP CONTAINMENT PIPE WHERE ROUTING PERMITS. CONTAINMENT PIPING SHALL BE CATHODIC PROTECTED, COATED AND WRAPPED STEEL OR A PROPRIETARY VENDOR DESIGNED PLASTIC SYSTEM ROUTED AS SHOWN FOR THE STEEL CONTAINMENT.
3. SEE PLED DWG NO. APP VWS M6 001 FOR RUNOFF DRAIN OR FLOOR DRAIN TO WWS SYSTEM.
4. FLAME ARRESTOR/ATMOSPHERIC VENT AND EMERGENCY PRESSURE RELIEF COVER VENT MANHOLE ARRANGEMENT TO MEET NFPA 30 CODE.
5. LOCAL AUDIBLE ALARM AT TRUCK FILL STATION.
6. DIESEL OIL TRANSFER PACKAGE AND ENCLOSURE PROVIDED WITH ELECTRIC HEATER TO MAINTAIN MINIMUM 50°F TEMPERATURE DURING DESIGN WINTER CONDITIONS.
7. FLAME ARRESTOR 10 FEET ABOVE FUEL OIL STORAGE TANK MAXIMUM LEVEL.
8. ELECTRIC 3KW EXTERIOR PAD HEATER AND INSULATION ON TANK BOTTOM ONLY. ELECTRIC HEATING SYSTEM OPERATES ONLY WHEN AMBIENT IS 50°F OR LESS.
9. FOR DIESEL ENGINE FUEL OIL SUPPLY AND RETURN SEE DWG APP DOS M6 001 AND APP DOS M6 002 RESPECTIVELY.
10. LOCATE CONNECTION ABOVE MAXIMUM LIQUID STORAGE LEVEL.
11. ALL NONUNDERGROUND PIPING, VALVES, SPECIALTIES, INSTRUMENTS AND EQUIPMENT (EXCLUDING OPEN-ENDED ATMOSPHERIC VENT OR DRAIN PIPE) TO BE INSULATED FOR HEAT RETENTION AND/OR FROSTIC PROTECTION.
12. BACKUP TO LT 016A.
13. LOW TANK LEVEL OVERRIDES LOW TEMPERATURE.
14. REMAINS CLOSED IN RECIRCULATION MODE UNLESS DAY TANK LEVEL IS LOW.
15. PIPE CONNECTION AT TANK 6" ABOVE TANK BOTTOM.
16. DELETED
17. FOR DIESEL ENGINE FUEL OIL SUPPLY AND RETURN LINES SEE DWG APP ECS M6 001. SUPPLY AND RETURN LINES ARE INSULATED.
18. TWO 125 KW EXTERIOR ELECTRIC PAD HEATERS AND TANK INSULATION ARE PROVIDED ON TANK. ELECTRIC HEATING SYSTEM OPERATES ONLY WHEN AMBIENT IS 50°F OR LESS.
19. TANK LEVEL MEASURED BY MEANS OF DIP STICK.
20. COUPLING ADAPTERS PROVIDED WITH DIESEL ENGINES FOR CONNECTION TO FIELD PIPING.

REFERENCES

A. AP1000 COMPONENT NUMBERING PROCEDURE APP GW GMP 006
B. PIPING AND INSTRUMENTATION DIAGRAM LEGEND DRAWING APP GW M6 001, 002 AND 003.

Figure represents system functional arrangement. Details internal to the system may differ as a result of implementation factors such as vendor-specific component requirements.

Figure 9.5.4-1 (Sheet 1 of 3)
Standby Diesel Fuel Oil System
Piping and Instrumentation Diagram
(REF) DOS 001

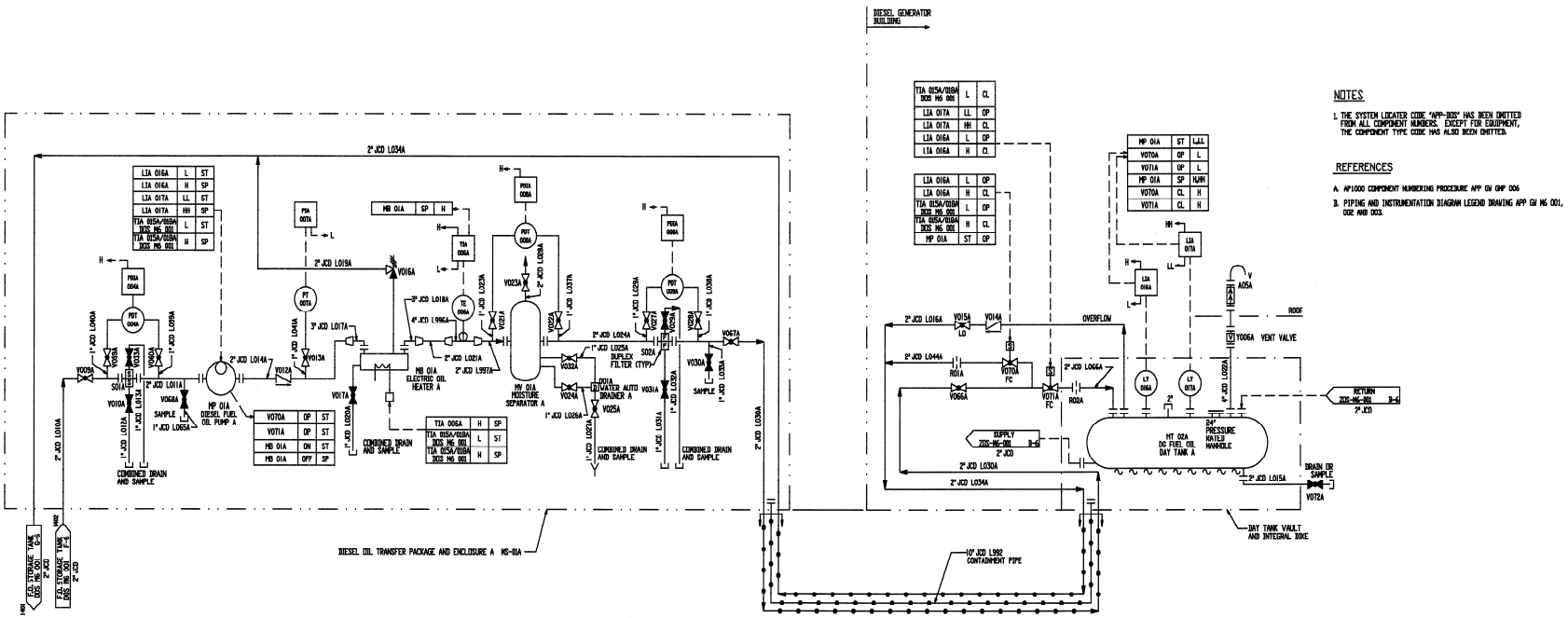

Figure represents system functional arrangement. Details internal to the system may differ as a result of implementation factors such as vendor-specific component requirements.

Figure 9.5.4-1 (Sheet 2 of 3)
Standby Diesel Fuel Oil System
Piping and Instrumentation Diagram
(REF) DOS 002

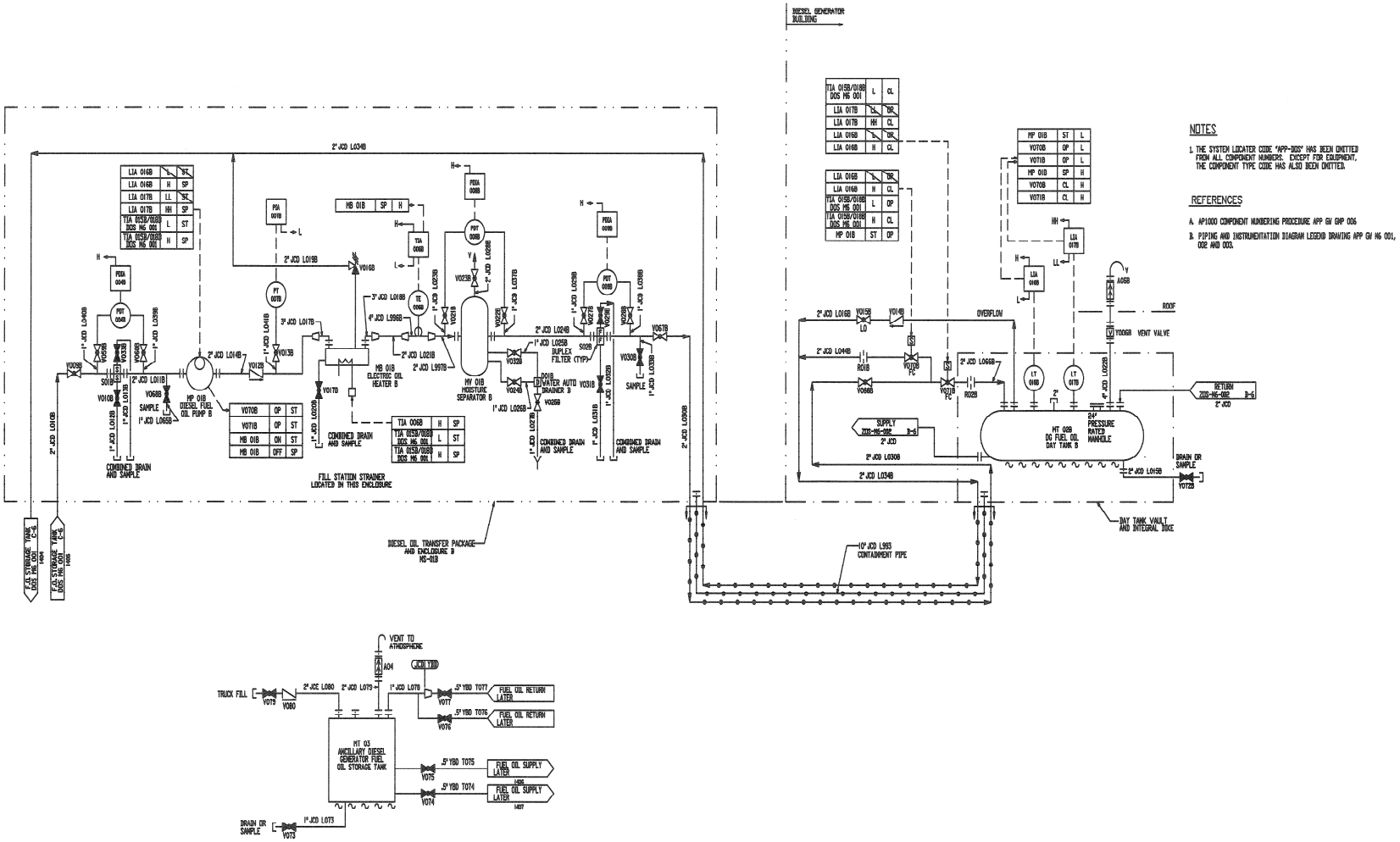

Figure represents system functional arrangement. Details internal to the system may differ as a result of implementation factors such as vendor-specific component requirements.

Figure 9.5.4-1 (Sheet 3 of 3)
Standby Diesel Fuel Oil System
Piping and Instrumentation Diagram
(REF) DOS 003

Appendix 9A Fire Protection Analysis

9A.1 Introduction

The AP1000 fire protection analysis is largely based upon the AP600 fire protection analysis that supported the AP600 Design Certification. It evaluates the potential for occurrence of fires within the plant and documents the capabilities of the fire protection system and the capability to safely shut down the plant. The fire protection analysis is an integral part of the process of selecting fire prevention, detection, and suppression methods, and provides a design basis for the fire protection system. The design of the fire protection system is described in Subsection 9.5.1.

The purpose of the fire protection analysis is as follows:

- Identify the potential for fires based on the type, quantity, and location of combustible materials
- Determine the consequences of postulated fires
- Provide a basis for decisions on how to prevent, detect, contain, and suppress fires
- Assess fire protection system adequacy
- Confirm the capability to safely shut down the plant following a fire

The fire protection analysis is performed for each fire area using the methodology described in Section 9A.2. This methodology follows the guidance of Branch Technical Position (BTP) CMEB 9.5-1 (Reference 1). The results of the analysis are provided in Section 9A.3.

The fire protection analysis is performed for areas of the plant containing safety-related components and for areas containing systems important to the generation of electricity. It is performed on an area by area basis outside containment and a zone by zone basis inside containment. This approach provides confidence that plant safety is preserved.

9A.2 Fire Protection Analysis Methodology

9A.2.1 Fire Area Description

The plant is divided into fire areas and fire zones as described in Section 9.5.1.2.1.1. These fire areas/zones and their boundaries are illustrated on Figures 9A-1 through 9A-5. Figure 9A-3 (Sheet 1 of 3) is modified to reflect the relocation of the Operations Support Center by changing the description of room number 40318 from “ALARA BRIEFING RM AND OPERATIONAL SUPPORT CENTER” to “ALARA BRIEFING RM.”

The analysis for each fire area briefly describes the fire area and associated fire zones, and identifies the principal systems and safety-related components in the fire area. Fire detection and suppression features are listed and the means of smoke control is discussed. The term "smoke" is used throughout this document to imply "smoke and products of combustion".

This document also uses terminology defined in NFPA 13, such as "light hazard", "ordinary hazard", and "extra hazard". Normally, these terms apply to sprinkler installations and their water supplies only. However, as used herein, the terms apply to the quantity and combustibility of the contents of a given fire area or fire zone irrespective of whether or not sprinklers are present.

9A.2.2 Combustible Material Survey

Each fire area and fire zone is surveyed to determine the type, quantity and distribution of in-situ combustible materials. Where the presence of transient combustibles is anticipated (for example, materials required to support refueling activities or scheduled maintenance) these materials are also identified.

When estimating quantities of electrical cable insulation, cable trays are assumed to have a cable fill of 30 percent of the usable tray depth. Cable enclosed in conduit or in closed metal cabinets is not included in the combustible material survey.

9A.2.3 Fire Severity Categorization

For purposes of evaluating fire barrier adequacy, the expected fire severity for each area/zone is categorized from A (slight) to E (severe) in accordance with Table 7-9E of the NFPA Fire Protection Handbook, 16th edition (Reference 2), based on the type of materials present.

Fire severity category A is used for battery cases, category C is used for electrical cable insulation, and category E is used for combustible liquids. For fire areas containing mixed combustibles, an average category is used. If there are significant concentrations of combustible materials in the area/zone, the category assigned is generally more severe than that used for a uniform distribution.

9A.2.4 Combustible Loading and Equivalent Fire Duration Calculations

Fire barriers, detection and suppression methods are based on several factors, including regulatory guidance, the type of combustibles present, and investment protection considerations. Regulatory guidance takes precedent over the other considerations.

Combustible loading and equivalent fire duration calculations are performed for each fire area and each fire zone. The preliminary calculations provide information used in the selection of fire detection and suppression methods.

Combustible Loading Calculations

The calculation of combustible loading provides an indication of the maximum heat that is released if all the combustibles in a given fire area/zone are consumed.

The potential heat release (expressed in British thermal units, or Btus) for each type of combustible material in the fire area/zone is the product of the quantity of each combustible multiplied by its heat of combustion. The heat of combustion values used for these calculations are listed in Table 9A-1. The maximum heat release for all combustibles in the fire area/zone is found by adding the potential heat release of each combustible material.

The combustible loading for the fire area/zone is the maximum heat release per square foot (Btus per square foot). It is determined by dividing the maximum heat release for all combustibles in the fire area/zone by the floor area of the fire area or zone.

For fire areas that are not protected based on regulatory guidance and that do not have concentrations of volatile or radioactive combustibles, fire detection and suppression needs are established based on combustible loading, using the following guidelines:

Combustible Loading (Btu/ft^2)	Detection Capability	Suppression Capability
0 to 8,000	None	Manual

8,000 to 80,000	Yes	Manual
Above 80,000	Yes	Automatic and Manual

In addition, concentrations of combustibles were evaluated, including their proximity to fire barriers.

Equivalent Fire Duration

The duration of a fire in a given fire area or zone is influenced by many factors, including:

- The properties of the material (ease of ignition and rate of heat release)
- The surface area of the combustible material
- The presence of fire retardant coatings
- Ventilation parameters and availability of oxygen
- The degree of separation or the presence of barriers between groups of combustible materials

Fire duration is estimated based on the fire severity category and the equivalent combustible loading. Equivalent combustible loading is defined as the weight per square foot of ordinary combustibles (wood or paper) having a heat of combustion of 8,000 Btu/lb, that releases the same total heat as the combustibles in the fire area/zone. The equivalent combustible loading is calculated by dividing the maximum heat release per square foot by 8,000 Btu/lb. The fire endurance lines of Figure 7-9B of the NFPA Fire Protection Handbook, 16th edition (Reference 2), are used to estimate the fire duration in minutes.

Fire barriers are tested by exposure to a fire whose severity follows a time varying temperature curve known as the standard time-temperature curve (NFPA Fire Protection Handbook, 18th edition [Reference 5], Figure 7-5A.) The estimated fire duration for each fire area is normalized based on the standard time-temperature curve to obtain an equivalent fire duration. This value is compared with the fire resistance of the fire area boundaries. This comparison is used in conjunction with other factors, including those listed above, in making a determination of the adequacy of the fire area boundaries.

9A.2.5 Fire Protection Adequacy

The adequacy of the fire protection features for a postulated fire in each fire area or fire zone is evaluated. This evaluation includes the following points:

- A review of the AP600 Design Certification and other regulatory guidance
- A review of how the fire is detected and suppressed
- Verification of the adequacy of the fire resistance of the fire area boundaries
- Verification that the ventilation system for the fire area does not contribute to the spread of fire or smoke
- Verification that a fire in a nonsafety-related area does not threaten safety-related areas of the plant
- Verification that, for a fire in an area containing radioactive materials, the capability to minimize and control a potential release of radioactivity is not adversely affected

- A determination of the need for structural steel fireproofing
- A determination of the capability of the drainage systems to handle fire protection water flow.

9A.2.6 Fire Protection System Integrity

For fire areas containing safety-related components, the potential for a credible inadvertent actuation of automatic suppression systems is determined and the consequences are evaluated.

The design of automatic and manual suppression systems is reviewed to verify that there is no potential single impairment which incapacitates both the automatic suppression system and the manual suppression system.

9A.2.7 Safe Shutdown Evaluation

This subsection describes the methodology for evaluation of the effects of postulated fires in each fire area on the ability of the operator to achieve a safe shutdown of the plant. The criteria and assumptions upon which the evaluation is based are described in Subsection 9A.2.7.1. The safety-related features of the plant designed to provide the safe shutdown capability are described in Subsection 9A.2.7.2.

As indicated in Subsection 9.5.1, this evaluation is based upon satisfying the requirements of BTP CMEB 9.5-1. This basis includes using safe shutdown as defined in Section 16.1 in lieu of cold shutdown wherever stated in BTP CMEB 9.5-1. The automatic depressurization system is not used as the method for achieving safe shutdown after a fire and spurious actuation of the automatic depressurization system is avoided. The passive residual heat removal heat exchanger is used to remove decay heat for safe shutdown as described in Subsection 7.4.1.3.

In addition, the plant has enhanced capability to achieve cold shutdown following a fire as discussed in Subsection 9.5.1. This capability is not relied upon in the fire evaluation contained in Appendix 9A.

The criteria concerning cold shutdown capability deviates from the criteria applied to the evolutionary reactor designs, but is consistent with the criteria applicable to existing plants. To enhance the survivability of the normal safe shutdown and cold shutdown capability in the event of a fire, and to reduce the reliance on the infrequently utilized safety-related passive systems, automatic suppression or physical separation is provided in those fire areas outside containment where a fire could damage the normal shutdown capability. This criterion is unique to the AP1000 and does not ensure that the normal shutdown capability will be free of fire damage, or that the equipment necessary to achieve and maintain cold shutdown can be repaired within 72 hours.

9A.2.7.1 Criteria and Assumptions

The criteria and assumptions described below are used in performing the safe shutdown evaluation.

Postulated Fire

Only one fire is assumed to occur within the plant at any given time. A postulated fire is assumed to occur in any area (or zone in containment), whether or not the area contains in-situ combustible materials.

Any damage which would prevent proper operation of equipment and which the fire is capable of causing is assumed to occur immediately. Except where explicitly noted, no credit is taken for proper operation of equipment or moving of valves to proper position when not protected from the effects of a postulated fire.

Fire Barriers

As described in Subsection 9.5.1.2.1.1, non-combustible fire barriers are provided in accordance with BTP CMEB 9.5-1. The equivalent fire barrier ratings are shown in Figures 9A-1 through 9A-5 and are those of the barrier itself. Fire-proofing of structural steel is determined as described in Subsections 9.5.1.2.1.1 and 9A.2.5.

Fire Areas

Fire areas are three dimensional spaces designed to contain a fire that may exist within them. They are separated by fire barriers, fire barrier penetration protection, and other devices, such as those within the heating and air conditioning ducts, that isolate a fire to within the fire area.

A postulated fire does not extend beyond the boundary of the fire area. For fire areas outside the main control room, remote shutdown room, and containment fire areas, the zone of influence is defined as the entire fire area and all equipment in any one fire area is assumed to be rendered inoperable by the fire and re-entry into the fire area for repairs and operator actions is assumed to be impossible. However, no credit is taken for complete fire damage in cases in which complete damage is beneficial and partial damage is not. Chases for electrical cables, piping or ducts that pass through the fire area but are separated from it by 3-hour fire barriers are outside that fire area.

Zone of Influence

Outside containment, zone of influence is not defined. A fire outside containment is assumed to affect its entire fire area. Inside the containment fire area, the zone of influence is defined as the entire fire zone containing the fire. All equipment in any one fire zone is assumed to be rendered inoperable by the fire unless the fire protection analysis demonstrates otherwise. Class 1E electrical cables that are located in or pass through the fire zone but are separated from it by a 3-hour fire barrier are outside that fire zone.

Fire Zones

Fire zones are three dimensional spaces within fire areas. Fire zones are identified uniquely to indicate that they have fire protection features or attributes different than other fire zones in a given area. In containment, fire zones are identified to establish "zones of influence."

Independence of Affected Fire Areas

Only systems, components, and circuits free of fire damage are credited for achieving safe shutdown for a given fire. Systems, components, and circuits outside the zone of influence are considered free of fire damage if the effects of the fire do not prevent them from performing their required safe shutdown functions.

Event Assumptions

Plant accidents and severe natural phenomena are not assumed to occur concurrently with a postulated fire. Furthermore, a concurrent single active component failure (independent of the fire) is not assumed.

Offsite Power

A loss of offsite power is assumed concurrent with the postulated fire only when the safe shutdown evaluation indicates the fire could initiate the loss of offsite power.

Availability of Nonsafety-Related Systems

Only safety-related components and systems are assumed to be available to perform safe shutdown functions. (This is more stringent than required by BTP CMEB 9.5-1.) For each fire area or zone, the

safe shutdown evaluation is valid for the worst case fire in the area or zone and initial use of nonsafety-related equipment. Fire protection and smoke control systems are assumed to function as designed to detect and mitigate the effects of the fire.

If offsite power is available, nonsafety-related systems are assumed to continue to operate if a more conservative evaluation would result. Each safe shutdown evaluation is also valid considering the possibility that the operator may initiate safe shutdown using available nonsafety-related systems and that, should the fire later cause those systems to fail, safety-related systems may be automatically or manually actuated to continue the safe shutdown process.

Automatic Suppression Features Assessment

An assessment is performed to demonstrate the ability of the AP1000 to withstand a fire in fire areas outside containment, and achieve safe shutdown without the need for actuating the passive safety-related decay heat removal system. This evaluates the capability of the AP1000 non-safety-related systems to achieve safe shutdown.

Fire suppression is provided outside containment in locations that would degrade the normal nonsafety-related systems used to achieve safe shutdown following a fire, such that the operation of the passive residual heat removal heat exchanger would be required to provide shutdown decay heat removal. Fire suppression minimizes the challenges to the safety-related decay heat removal systems by enhancing the survivability of nonsafety-related systems used for shutdown decay heat removal.

The safe shutdown process, using nonsafety-related systems, is described in Subsection 7.4.1.2. This assessment credits the use of selected safety-related systems other than the passive residual heat removal system to facilitate the transition to cold shutdown conditions. The following safety-related features may be used:

- Insertion of the control rods to provide reactor shutdown,
- Operation of the core makeup tanks to provide boration and reactor coolant system makeup,
- Manual throttling and closing of a first stage automatic depressurization valve to reduce the reactor coolant system pressure to the operating pressure of the normal residual heat removal system,
- Instrumentation used to monitor reactor coolant system conditions.

The use of these safety-related systems do not result in significant plant transients. If the automatic depressurization system is actuated, the operators align the normal residual heat removal system to provide injection to the reactor coolant system. This action causes the core makeup tank level to remain above the fourth stage valve actuation setpoint and prevents significant steaming to and flooding of the containment.

Process Monitoring

Direct process signals are provided to monitor the shutdown process and to assist in determining proper actions for operation of the shutdown methods.

Manual Operation

One of the required manual actions to achieve plant shutdown for a postulated fire event is to scram the reactor.

Manual actions by operations personnel include manipulation of equipment located anywhere outside the affected fire area, if accessibility and staffing levels permit such actions. Entry into the fire area for repairs or operator actions is assumed to be impossible.

Although the typical shutdown sequence does not require manual actions by the operator, fire damage may not be sufficient in many cases to trip the plant. The operator may take appropriate actions to expedite an orderly shutdown. These actions are performed in the main control room. If the fire occurs in the main control room, these actions are performed at the remote shutdown workstation.

High-Low Pressure Interfaces

NRC Generic Letter 81-12 (Reference 3) requests the identification and evaluation of the interfaces between the high pressure reactor coolant system and low pressure systems such as the normal residual heat removal system. Typically, these high-low pressure interfaces contain two redundant and independent remotely-operated valves in series. These two valves and their control and power cables may be subject to a single fire. This fire may potentially cause the two valves to open, resulting in a fire-initiated loss-of-coolant accident (LOCA) through the high-low pressure system interface. Electrically controlled valves which provide such an interface are identified. These interface valves are considered to be required for safe shutdown.

Associated Circuits

The AP1000 was designed with separation of safety-related circuits and equipment as a primary objective. As a result of the concern for separation from the beginning of the design, the use of associated circuits has been minimized.

The safe shutdown equipment and systems for each fire area are isolated from associated circuits in the fire area so that hot shorts, open circuits, or shorts to ground in the associated circuits will not prevent operation of the safe shutdown equipment. No postulated fire involving associated circuits will prevent safe shutdown.

Associated circuits comply with Regulatory Guide 1.75 position 4 related to associated circuits and IEEE 384-1981 (Section 5.5.2).

Spurious Actuation of Equipment

Fire-caused damage is assumed to be capable of resulting in the following types of circuit faults: hot shorts, open circuits, and shorts to ground. Spurious actuation of components caused by these circuit faults are evaluated. Components are assumed to be energized or de-energized by one or more of the above circuit faults. For example, air operated and solenoid operated valves are assumed to fail open or closed; pumps are assumed to fail running or not running; electrical distribution breakers could fail open or closed. For three-phase ac circuits, the probability of getting a hot short on all three phases in the proper sequence to cause spurious operation of a motor is considered sufficiently low as to not require evaluation, except for cases involving high-low pressure interfaces. For ungrounded dc circuits, if spurious operation could only occur as a result of two ungrounded hot shorts of the proper polarity, then no further evaluation is necessary, except for any cases involving a high-low pressure interface. Therefore, spurious operation of ac or dc motor operated valves as a result of power cable hot shorts is not assumed, except for cases involving a high-low pressure interface.

It is assumed that a fire results in the loss of all automatic function (signals and logic) from the circuits located in the fire area. In addition, an assessment of multiple/simultaneous spurious actuations or signals resulting from the fire was performed (Reference 6) with the conclusion that either spurious actuations do not occur, or the consequences are such that safe shutdown can still be achieved. The spurious actuations and signals that are evaluated are those that could cause a breach in the reactor

coolant boundary or defeat safety-related decay heat removal capability or cause an increase in shutdown reactivity of the reactor.

Spurious actuation of the redundant valves in any one high-low pressure interface line are postulated if the circuits for those valves are located in the fire area.

Most control room controls use soft-controls which communicate over multiplexed data channels. Fire-induced spurious actuation from these multiplexed soft controls is not assumed.

Spurious actuation from control room dedicated switches which could lead to a breach of reactor coolant system pressure boundary, loss of decay heat removal function, or loss of shutdown reactivity control is prevented by the use of dual two-pole, energize-to-actuate, ungrounded dc circuits, which require at least four simultaneous hot shorts of proper polarity for spurious actuation. In the event of a fire in the main control room, control may be transferred to the remote shutdown workstation, depending on the extent of the fire. For a small fire which can be quickly extinguished, control is maintained in the main control room, and the potential for damage or spurious signals is limited. For larger postulated fires, the main control room is evacuated and control is transferred to the remote shutdown workstation. Once control is transferred, the dedicated switches in the main control room are disabled by a transfer switch.

Spurious actuation of squib valves is prevented by the use of a squib valve controller circuit which requires multiple hot shorts for actuation, physical separation of potential hot short locations, and provisions for operator action to remove power from the fire zone. No postulated fire can spread to the hot short locations before the operator can remove power from the fire zone.

Automatic depressurization system stages 1, 2, and 3 consist of parallel paths, each path having two motor-operated valves in series. Spurious stage 1, 2, or 3 actuation is prevented by the use of physical separation of control circuits for the two series valves and provisions for operator action to remove power from the fire zone. No postulated fire can spread to the hot short locations before the operator can remove power from the fire zone.

Multiple High-Impedance Faults

It is postulated that fire-induced circuit faults may occur with high enough impedance to prevent tripping of the affected circuit breaker. If multiple high-impedance faults occur simultaneously, affecting branch circuits fed from a common power source, there is a potential for the sum of the currents from these multiple high-impedance faults to be high enough to trip the main circuit breaker feeding the bus. Once the main breaker trips, components powered from the bus lose their power source. Multiple high-impedance faults are considered in the evaluation of safe shutdown capability.

Plant Personnel

The plant operating staff available for manual actions to achieve safe shutdown, during and after the fire, is limited to the minimum number of posted operator positions minus those assigned to the fire brigade.

Equipment Environment

The environment of the equipment required to function for shutdown should not become so severe as to prevent the equipment from functioning. If the environment does exceed the conditions for which the equipment is capable of functioning, it is assumed that the equipment no longer is capable of performing its intended function.

Emergency Lighting

In situations where the safe shutdown evaluation identifies the need for manual operator action in response to a fire, the estimate of the time required for this action considers the availability of emergency lighting in locations where these actions are performed and along the access and egress routes thereto.

Emergency Communications

The safe shutdown evaluations consider the need for and availability of emergency communications within the plant following a fire.

9A.2.7.2 Safe Shutdown Methodology

The safe shutdown process, the systems used, and the functional requirements for safe shutdown are described in Section 7.4. As noted above, only safety-related equipment is utilized for safe shutdown. A description of this equipment is provided in the applicable sections.

Table 9A-2 lists the safety-related components used for safe shutdown and their associated electrical divisions. Each fire area is reviewed to identify the potential scope of fire damage and to verify that the capability to achieve and maintain safe shutdown is preserved.

The shutdown process uses controls located in the main control room. In the event of a fire in the main control room, controls located at the remote shutdown workstation are used.

9A.3 Fire Protection Analysis Results

The fire protection analysis is conducted for the following primary plant structures, which are shown on the site plot plan, Figure 1.2-2:

- Nuclear island
- Turbine building
- Annex building
- Radwaste building
- Diesel generator building

Table 9A-3 identifies the type and quantity of combustible materials in each fire area of the primary plant structures and indicates the equivalent fire duration. Fire detection and suppression features are also summarized in Table 9A-3.

Openings through fire barriers for pipe, conduit, and cable trays are sealed or closed to provide a fire resistance rating at least equal to that of the fire barrier itself. Penetration designs conform to the guidelines of BTP CMEB 9.5-1. Fire barrier penetration openings for ventilation are protected by fire dampers having a rating equivalent to that of the fire barrier. For 1-hour rated fire barriers, fire dampers are not required since the duct itself is an adequate barrier. The protection of door openings conforms to the guidelines of BTP CMEB 9.5-1.

Structural steel fireproofing is provided as described in Subsection 9.5.1.2.1.1.

The fire detection and suppression capabilities for each fire area are selected based on the criteria described in Subsection 9A.2.1 and are consistent with the importance of the equipment in the fire area to plant availability. Portable fire extinguishers are accessible throughout the plant.

The presence of radioactive systems is noted in the description of each fire area. Potential releases of radioactivity as a consequence of a fire in these areas is mitigated by measures such as:

- Control and confinement of sources of radioactivity per ALARA principles
- Use of fire dampers to isolate ventilation ducts serving the fire area
- Use of fire suppression systems to quickly suppress the fire
- Provision of curbed floor areas and sizing of sumps to collect and retain fire protection water within the affected fire area or building

The safe shutdown evaluation of spurious equipment actuation as a result of a fire is addressed in Subsection 9A.3.7. The protection of accident mitigation equipment (as opposed to safe shutdown equipment) is also addressed in Subsection 9A.3.7.

9A.3.1 Nuclear Island

Figure 9A-1 identifies fire areas and fire zones within the nuclear island and illustrates the fire resistance of the fire area boundaries. The nuclear island is comprised of the following primary areas:

- Containment/shield building
- Auxiliary building – nonradiologically controlled areas (non-RCA)
- Auxiliary building – radiologically controlled areas (RCA)

The containment/shield building comprises a single fire area for the purposes of this analysis.

The auxiliary building is divided into the radiologically controlled areas and nonradiologically controlled areas which are physically separated by structural walls and floor slabs. These structural barriers are designed to prevent fire propagation across the boundary between these areas.

The auxiliary building is further subdivided into fire areas separated by fire-rated structural barriers. These barriers provide physical separation between the four Class 1E electrical divisions and between these divisions and nonsafety-related areas.

Floor drains accommodate water flow from fire protection systems without a significant accumulation of water in a fire area. Flooding of components required for safe shutdown is also precluded by the fact that only a limited volume of fire water can be discharged from the fire protection system in fire areas containing those components. This subject is further discussed in Section 3.4.

Drain systems in the radiological controlled area of the nuclear island Annex Building and Radwaste Building drain to fire zones in the nuclear island where there are no safe shutdown components. Fires in these zones due to potential combustible liquid transport by the drains do not affect safe shutdown.

There is no drain path which could drain combustible liquids to the fire areas in the electrical portion of the nuclear island.

For mechanical equipment fire areas in the nonradioactive auxiliary building, fires caused by potential transport of combustible liquid through the drain system are included in the fire hazards analysis.

9A.3.1.1 Containment/Shield Building

This building comprises one fire area - 1000 AF 01. This fire area is separated into fire zones and includes the spaces inside containment as well as the valve room for the passive containment cooling system (PCS), the middle annulus, the upper annulus, and the operating deck staging area outside containment.

The fire protection and the safe shutdown analysis for the containment identifies the location and the separation of the safe shutdown components located inside the containment. The safe shutdown components located inside the containment are primarily components of the passive core cooling system (PXS), the reactor coolant system (RCS), the steam generator system (SGS), and containment isolation.

For this evaluation, the containment shield building is divided into the following fire zones. These zones are based on the establishment of boundaries (structures or distance) that inhibit fire propagation from zone to zone. Complete fire barrier separation cannot be provided inside containment because of the need to maintain the free exchange of gases for purposes such as passive containment cooling. The location of safety-related equipment and the routing of Class 1E electrical cable in each fire zone enhances the separation of redundant safe shutdown components.

Fire Zone

- 1100 AF 11105 Reactor cavity
- 1100 AF 11204 Vertical access and reactor coolant drain tank room
- 1100 AF 11206 Accumulator room A
- 1100 AF 11207 Accumulator room B
- 1100 AF 11208 Normal residual heat removal valve room
- 1100 AF 11209 Chemical and volume control system room
- 1100 AF 11300A Maintenance floor (southeast quadrant access)
- 1100 AF 11300B Maintenance floor (north half)
- 1100 AF 11301 Steam generator compartment 1
- 1100 AF 11302 Steam generator compartment 2
- 1100 AF 11303 Pressurizer compartment
- 1100 AF 11303A Automatic depressurization system lower valve area
- 1100 AF 11303B Automatic depressurization system upper valve area
- 1100 AF 11500 Operating deck
- 1200 AF 12341 Middle annulus
- 1200 AF 12541 Upper annulus
- 1250 AF 12555 Main control room emergency habitability system air storage/operating deck staging area
- 1270 AF 12701 Passive containment cooling system valve room

The equipment and components in this fire area contain radioactive material with the exception of passive containment cooling system and main control room emergency habitability system components.

Fire Detection and Suppression Features

- Fire detectors
- Hose station(s)
- Portable fire extinguishers (during reactor shutdown for maintenance)
- Water spray systems in specific locations

Smoke Control Features

Containment air filtration system (VFS) containment isolation valves, if open to the containment atmosphere, are closed by operator action to control the spread of fire and smoke. After the fire, smoke is removed from the fire area by portable exhaust fans and flexible ductwork.

Fire Protection Adequacy Evaluation

A fire in this fire area is detected by operation of a fire detector, which produces an audible alarm locally and both visual and audible alarms in the main control room and the security central alarm station. The fire is extinguished manually using hose streams or portable extinguishers.

Combustible materials in this fire area are listed in Table 9A-3, and primarily consist of electrical cable insulation. Concentrations of combustibles are described in the evaluation of each fire zone. This is a light hazard fire area and the rate of fire growth is expected to be slow. Three-hour fire barriers provide adequate separation from adjacent fire areas and the fire is contained within the fire area.

The ventilation system does not contribute to the spread of the fire or smoke as described in the Smoke Control Features section above.

Fire Protection System Integrity

Inadvertent operation of an automatic suppression system is prevented by the normally closed containment isolation valve in the water supply line. Operator action is required to open this valve and admit water to the system.

The consequences of a break in a fire protection line during normal plant operation are limited because the containment isolation valve for the fire water supply line to the containment hose stations is normally closed and are bounded by other flooding events inside containment. See Section 3.4 for further discussion of flooding events inside containment.

9A.3.1.1.1 Fire Zone 1100 AF 11105

This fire zone is comprised of the following room(s):

Room No.	
11105	Reactor vessel cavity
11205	Reactor vessel nozzle area

Safe Shutdown Evaluation

The quantity and arrangement of the combustible materials in this fire zone, and the characteristics of the barriers that separate this zone from other fire zones are such that a fire which damages safe shutdown components in this zone does not propagate to the extent that it damages redundant safe shutdown components in another fire zone.

The quantity of combustible materials in this fire zone is very low, consisting primarily of cable insulation associated with the instrumentation in this zone. These cables and instruments are located in the lower part of the fire zone. This fire zone is separated from adjacent fire zones by the thick concrete walls and floor of the reactor vessel cavity, except at the top of the fire zone, where there are penetrations associated with reactor coolant system piping and where the annular space around the reactor vessel flange is closed by the cavity seal ring. There is a doorway to the reactor coolant drain tank room (fire zone 1100 AF 11204) that is closed and a ventilation duct that provides cool air from the containment recirculation cooling system.

Smoke and hot gases from a fire accumulate within this fire zone and gradually migrate via reactor coolant system piping penetrations to adjacent fire zones 1100 AF 11204, 1100 AF 11206, 1100 AF 11301, and 1100 AF 11302. The smoke and hot gases are expected to rise due to their buoyancy and be replaced by air coming from the containment recirculation cooling system. They are cooled by mixing with the air and by contact with structural surfaces and thus do not cause propagation of the fire beyond this fire zone. Safe shutdown components listed in Table 9A-2 for the adjacent fire zones are not susceptible to damage by the diluted and cooled smoke and gases from this fire zone.

Table 9A-2 identifies the safe shutdown components located in this fire zone. They are the four excore flux instrumentation channels, one for each division. Although it is unlikely that all of the components would be damaged, a fire in this fire zone is conservatively assumed to disable all of the above instrumentation. The source, intermediate and power range excore detectors are not required for automatic safe shutdown initiation or maintenance during or following a fire in this fire zone. These detectors are used to monitor and verify that the reactor is shut down. The redundant instrumentation used for monitoring core reactivity indirectly are the core exit thermocouples located in fire zone 1100 AF 11500. These thermocouples are mounted within the reactor and integrated head package and have exposed cable high in the integrated head package in fire zone 1100 AF 11500. The thermocouple cables will be unaffected by smoke from a fire in the reactor cavity. In addition, reactor subcriticality after shutdown is maintained by an adequate boron concentration in the reactor coolant. This concentration is establish by the automatic actions taken upon reactor trip such as, isolation of non-borated makeup sources and opening of the flow paths to sources of borated water. Boron concentrations can be checked periodically to determine if adequate levels exist.

No fire in this zone can cause spurious actions which could cause a breach in the reactor coolant boundary or defeat safety-related decay heat removal capability or cause an increase in shutdown reactivity of the reactor.

9A.3.1.1.2 Fire Zone 1100 AF 11204

This fire zone is comprised of the following room(s):

Room No.	
11104	Reactor coolant drain tank room
11204	Vertical access area

Safe Shutdown Evaluation

The quantity and arrangement of the combustible materials in this fire zone, and the characteristics of the barriers that separate this zone from other fire zones are such that a fire which damages safe shutdown components in this zone does not propagate to the extent that it damages redundant safe shutdown components in another fire zone.

The quantity of combustible materials in this fire zone is very low, consisting primarily of cable insulation associated with the instrumentation in this zone. The cable raceways are located against one structural concrete wall of the fire zone and in the reactor coolant drain tank room at the bottom of the fire zone. The floor of this fire zone is solid concrete at the bottom of containment. Thick concrete walls separate this fire zone from adjacent fire zones, except for access passageways to and from the steam generator compartments (fire zones 1100 AF 11301/11302). Steel grating and the vertical access stairway form the boundary between this fire zone and the maintenance floor above (fire zone 1100 AF 11300B). There is a doorway between the reactor coolant drain tank room and the bottom of the reactor cavity (fire zone 1100 AF 11105) that is closed.

Smoke and hot gases from a fire in this fire zone rise through the grating at the top of the vertical access area and spread through the large maintenance floor air space (fire zones 1100 AF 11300A and B). They are cooled by mixing with the air and by contact with structural surfaces and thus do not cause propagation of the fire beyond this fire zone. Safe shutdown components listed in Table 9A-2 for the adjacent fire zones are not susceptible to damage by the diluted and cooled smoke and gases from this fire zone.

There are no safe shutdown components in this fire zone. No fire in this zone can cause spurious actions which could cause a breach in the reactor coolant boundary or defeat safety-related decay heat removal capability or cause an increase in shutdown reactivity of the reactor.

9A.3.1.1.3 Fire Zone 1100 AF 11206

This fire zone is comprised of the following room(s):

Room No.	
11206	Passive core cooling system valve/accumulator room A

Safe Shutdown Evaluation

The quantity and arrangement of the combustible materials in this fire zone, and the characteristics of the barriers that separate this zone from other fire zones are such that a fire which damages safe shutdown components in this zone does not propagate to the extent that it damages redundant safe shutdown components in another fire zone.

The quantity of combustible materials in this fire zone is very low, consisting primarily of cable insulation related to the valves located in this fire zone. There are no significant concentrations of combustible materials. This fire zone is physically separated from other fire zones by walls, floor and ceiling with minimum concrete thicknesses of one foot, except for an access hatch and a small CMT pipe penetration in the ceiling. The penetration is beneath core makeup tank A, located on the maintenance floor (fire zone 1100 AF 11300A).

Smoke and hot gases from a fire in this fire zone rise through the CMT pipe penetration and access hatch and spread through the large maintenance floor air space (fire zones 1100 AF 11300A and B). They are cooled by mixing with the air and by contact with structural surfaces and thus do not cause propagation of the fire beyond this fire zone. Safe shutdown components listed in Table 9A-2 for the adjacent fire zones are not susceptible to damage by the diluted and cooled smoke and gases from this fire zone.

Table 9A-2 lists the safe shutdown components contained in this fire zone. A fire in this fire zone is conservatively assumed to disable control of all of the valves and instrumentation in this fire zone. The passive core cooling system safe shutdown components located in fire zones 1100 AF 11207 and 1100 AF 11300B are redundant to those in this fire zone, and are sufficient to perform applicable functions to achieve and maintain safe shutdown. The spent fuel pool cooling system containment isolation valve located outside the containment fire area is redundant to the containment isolation valve inside containment in this fire zone and is sufficient to maintain containment integrity.

No fire in this zone can cause spurious actions which could cause a breach in the reactor coolant boundary or defeat safety-related decay heat removal capability or cause an increase in shutdown reactivity of the reactor.

9A.3.1.1.4 Fire Zone 1100 AF 11207

This fire zone is comprised of the following room(s):

Room No.	
11207	Passive core cooling system valve/accumulator room B

Safe Shutdown Evaluation

The quantity and arrangement of the combustible materials in this fire zone, and the characteristics of the barriers that separate this zone from other fire zones are such that a fire which damages safe shutdown components in this zone does not propagate to the extent that it damages redundant safe shutdown components in another fire zone.

The quantity of combustible materials in this fire zone is very low, consisting primarily of cable insulation related to the valves located in this fire zone. There are no significant concentrations of combustible materials. This fire zone is physically separated from other fire zones by walls, floor and ceiling with concrete thicknesses of more than one foot, except for a closed access hatch and a CMT pipe penetration in the ceiling, and a passageway to the adjacent RNS valve room (fire zone 1100 AF 11208). The large accumulator vessel stands in front of this passageway and provides a barrier to fire propagation between the two fire zones. The ceiling blockout is beneath core makeup tank B, located on the maintenance floor (fire zone 1100 AF 11300B). The physical arrangement of the small penetration and the large tank and its support results in a tortuous path for fire propagation between these two fire zones. A fire is not expected to propagate to fire zone 1100 AF 11208. If it did, however, fire zone 1100 AF 11206 provides redundant safe shutdown equipment.

Smoke and hot gases from a fire in this fire zone rise through the ceiling CMT pipe penetration and spread through the large maintenance floor air space (fire zones 1100 AF 11300A and B). They are cooled by mixing with the air and by contact with structural surfaces and thus do not cause propagation of the fire beyond this fire zone. Safe shutdown components listed in Table 9A-2 for the adjacent fire zones are not susceptible to damage by the diluted and cooled smoke and gases from this fire zone.

Table 9A-2 lists the safe shutdown components contained in this fire zone. Although it is unlikely that more than one valve would be damaged, a fire in this fire zone is conservatively assumed to disable control of all of the valves in this fire zone. The passive core cooling system safe shutdown components located in fire zone 1100 AF 11206 and 1100 AF 11300A are redundant to those in this fire zone, and are sufficient to perform applicable functions to achieve and maintain safe shutdown.

No fire in this zone can cause spurious actions which could cause a breach in the reactor coolant boundary or defeat safety-related decay heat removal capability or cause an increase in shutdown reactivity of the reactor.

9A.3.1.1.5 Fire Zone 1100 AF 11208

This fire zone is comprised of the following room(s):

Room No.	
11208	Normal residual heat removal valve room

Safe Shutdown Evaluation

The quantity and arrangement of the combustible materials in this fire zone, and the characteristics of the barriers that separate this zone from other fire zones are such that a fire which damages safe

shutdown components in this zone does not propagate to the extent that it damages redundant safe shutdown components in another fire zone.

The quantity of combustible materials in this fire zone is very low, consisting primarily of cable insulation associated with the valves in this zone. There are no significant concentrations of combustible materials. This small fire zone is physically separated from other fire zones by walls, floor and ceiling with concrete thicknesses of more than one foot, except for a passageway to the adjacent PXS valve/accumulator room (fire zone 1100 AF 11207). The large accumulator vessel stands in front of this passageway and provides a barrier to fire propagation between the two fire zones. If fire were to propagate to fire zone 1100 AF 11207, however, fire zone 1100 AF 11206 provides redundant safe shutdown equipment.

Smoke and hot gases from a fire in this fire zone migrate into the adjacent PXS valve/accumulator room (fire zone 1100 AF 11207). They are cooled by mixing with the air and by contact with structural surfaces and thus do not cause propagation of the fire beyond this fire zone. Safe shutdown components listed in Table 9A-2 for the adjacent fire zones are not susceptible to damage by the diluted and cooled smoke and gases from this fire zone.

Table 9A-2 lists the safe shutdown components located in this zone. Although it is unlikely that more than one valve would be damaged, a fire in this fire zone is conservatively assumed to disable control of all of the valves in this fire zone. During normal power operation, power to the hot leg suction isolation valves is locked out to protect the high-low pressure interface between the reactor coolant system and the normal residual heat removal such that they will be unaffected by the fire in maintaining the reactor coolant pressure boundary. The normal residual heat removal containment isolation valve, located outside the containment fire area, is redundant to the four containment isolation valves in this zone and is sufficient to maintain containment and reactor coolant pressure boundary integrity.

No fire in this zone can cause spurious actions which could cause a breach in the reactor coolant boundary or defeat safety-related decay heat removal capability or cause an increase in shutdown reactivity of the reactor.

9A.3.1.1.6 Fire Zone 1100 AF 11209

This fire zone is comprised of the following room(s):

Room No.	
11209	Chemical and volume control system room

Safe Shutdown Evaluation

The quantity and arrangement of the combustible materials in this fire zone, and the characteristics of the barriers that separate this zone from other fire zones are such that a fire in this fire zone does not propagate to the extent that it damages safe shutdown components outside this fire zone.

The quantity of combustible materials in this fire zone is low, consisting primarily of cable insulation associated with the valves and instrumentation in this zone. There are no significant concentrations of combustible materials. This fire zone is physically separated from other fire zones by walls, floor and ceiling with concrete thicknesses of more than one foot, except for an access stairway and a small hatch from the maintenance floor above (fire zone 1100 AF 11300B).

Smoke and hot gases from a fire in this fire zone rise through the access hatch and spread through the large maintenance floor air space (fire zones 1100 AF 11300A and B). They are cooled by mixing with the air and by contact with structural surfaces and thus do not cause propagation of the fire

beyond this fire zone. Safe shutdown components listed in Table 9A-2 for the adjacent fire zones are not susceptible to damage by the diluted and cooled smoke and gases from this fire zone.

There are no safe shutdown components in this fire zone. No further evaluation is required.

No fire in this zone can cause spurious actions which could cause a breach in the reactor coolant boundary or defeat safety-related decay heat removal capability or cause an increase in shutdown reactivity of the reactor.

9A.3.1.1.7 Fire Zone 1100 AF 11300A

This fire zone is comprised of the following room(s):

Room No.	
11300	Maintenance floor (southern part)
11400	Maintenance floor mezzanine (southern part)

Safe Shutdown Evaluation

The quantity and arrangement of the combustible materials in this fire zone, and the characteristics of the barriers that separate this zone from other fire zones are such that a fire which damages safe shutdown components in this zone does not propagate to the extent that it damages redundant safe shutdown components in another fire zone.

The quantity of combustible materials in this fire zone is low, consisting primarily of cable insulation. There are small concentrations of cables at the top of the zone and at several separate locations along the walls. This fire zone is physically separated from fire zones below by the maintenance floor, with a concrete thickness of more than one foot, except for openings described in the evaluation of fire zone 1100 AF 11206. This fire zone is separated from the operating deck above (fire zone 1100 AF 11500) by a ceiling with a concrete thickness of more than one foot, except for the hatches near the containment maintenance hatch, which are covered with steel grating. The walls of this fire zone are the steel containment vessel, the steel wall of the in-containment refueling water storage tank, or walls with a concrete thickness of more than one foot, except for two designated boundaries with the adjacent portion of the maintenance floor (fire zone 1100 AF 11300B). These boundaries are approximately at the centerline of containment, one located in the narrow annular space behind the in-containment refueling water storage tank and the other near the personnel hatch. The steam generator compartments, the refueling cavity, and the in-containment refueling water storage tank provide barriers between the two large maintenance floor fire zones. Safe shutdown components fire zone 1100 AF 11300A are separated from redundant safe shutdown components in fire zone 1100 AF 11300B by these barriers or by a horizontal distance of more than 20 feet with no intervening combustible or fire hazards. In addition, safety-related cables in both of these fire zones are routed in closed cable trays or conduit, minimizing the likelihood that a fire originating in a raceway of one division can propagate to a raceway of another division. Furthermore, open-nozzle water spray suppression systems are provided for nonsafety-related electrical cables routed in open cable trays in fire zone 1100 AF 11300B (there are no such cable trays in fire zone 1100 AF 11300A), providing additional assurance that a fire will not propagate between these fire zones.

Most of the smoke and hot gases from a fire in this fire zone rises through the large steel grating covered hatches between the containment maintenance hatch and the steam generator 2 compartment into the large air space in the upper portion of containment (fire zone 1100 AF 11500). Small quantities of smoke, especially that which has already cooled, may migrate horizontally into the adjacent portion of the maintenance floor (fire zone 1100 AF 11300B). The smoke and gases are cooled by mixing with the air and by contact with structural surfaces and thus do not cause propagation of the fire beyond this fire zone. Temperature effects on the electrical cables routed high

above the operating deck and passing over the large steel-grating covered hatches are not expected to be significant, but are not a concern as these are the same cables that continue into this fire zone and are assumed to be lost. Safe shutdown components listed in Table 9A-2 for the adjacent fire zones are not susceptible to damage by the diluted and cooled smoke and gases from this fire zone.

Table 9A-2 lists the safe shutdown components located in this fire zone. The passive core cooling system has two IRWST gutter isolation valves located in this zone. These valves close to divert condensate from the passive containment cooling system (on the inside of the containment shell) into the IRWST. This condensate maintains the passive residual heat removal heat exchanger heat sink for the long term. These valves are fail closed air operated valves. They are located at least 12 feet apart horizontally and at least 10 feet apart vertically. One valve is located on the south end of the refueling cavity, the other is located on the east side of the refueling cavity. In addition, a fire detector is located close to each valve. Given the low combustible materials in this fire zone, a fire will only affect one of the valves initially. The fire detector located near the valve that is initially affected will alert the operators so that they can actuate the unaffected valve before the fire can prevent operation of the second valve. These valves are qualified to operate with elevated temperatures of 340°F.

Although the consequences of a fire are expected to be very limited, a fire in this fire zone is conservatively assumed to eventually disable all of the safe shutdown components in this fire zone.

The redundant passive core cooling system and steam generator system safe shutdown components (listed in Table 9A-2), located in fire zones 1100 AF 11207 and 1100 AF 11300B, are sufficient to perform applicable functions to achieve and maintain safe shutdown.

The primary sampling system and containment air filtration system containment isolation valves, located outside the containment fire area, are redundant to the containment isolation valves in this fire zone and are sufficient to maintain containment integrity.

The redundant reactor coolant system hot leg flow instrumentation located in fire zones 1100 AF 11300B and 1100 AF 11301 is sufficient to perform applicable functions to achieve and maintain safe shutdown.

No fire in this zone can cause spurious actions which could cause a breach in the reactor coolant boundary or defeat safety-related decay heat removal capability or cause an increase in shutdown reactivity of the reactor.

9A.3.1.1.8 Fire Zone 1100 AF 11300B

This fire zone is comprised of the following room(s):

Room No.	
11300	Maintenance floor (northern part)
11400	Maintenance floor mezzanine (northern part)

Safe Shutdown Evaluation

The quantity and arrangement of the combustible materials in this fire zone, and the characteristics of the barriers that separate this zone from other fire zones are such that a fire which damages safe shutdown components in this zone does not propagate to the extent that it damages redundant safe shutdown components in another fire zone.

The quantity of combustible materials in this fire zone is low, consisting primarily of cable insulation in the termination boxes and cable trays. There is a concentration of cables on the south side of the zone near the refueling cavity and small concentrations of cables at the top of the zone and at

several locations along the walls. This fire zone is physically separated from fire zones below by the maintenance floor, which has a concrete thickness of more than one foot, except for access stairways and hatches. This fire zone is separated from the operating deck above (fire zone 1100 AF 11500) by a ceiling that has a concrete thickness of more than one foot, except for several openings for an access stairway, elevator, hatches and blockouts. The walls of this fire zone are the steel containment vessel, the steel wall of the in-containment refueling water storage tank, the noncombustible enclosure for the division B and D penetrations and raceways (fire zone 1100 AF 11500), or walls with a concrete thickness of more than one foot, except for the designated boundaries with the adjacent portion of the maintenance floor, described in the evaluation of fire zone 1100 AF 11300A. There is a doorway between the lower pressurizer compartment (fire zone 1100 AF 11303) and the steam generator #1 lower manway platform (fire zone 1100 AF 11301).

Safety-related cables are routed in closed cable trays or conduit. For open cable trays, which represent the only significant in-situ combustibles in this fire zone, open-nozzle water spray suppression systems are provided. These systems are automatic except that, to preclude inadvertent actuation, operator action is required to open the outboard containment isolation valve. These suppression systems rapidly extinguish a fire in these cable trays and prevent fire propagation to adjacent fire zones.

The use of water spray systems for the open cable trays in this fire zone limits smoke and heat generation. Small quantities of smoke and hot gases from a fire in this fire zone rise through openings in the ceiling, or migrate via the large steel grating covered hatches between the containment maintenance hatch and the steam generator 2 compartment in the adjacent portions of the maintenance floor (fire zone 1100 AF 11300A), into the large air space in the upper portion of containment. They are cooled by mixing with the air and by contact with structural surfaces and thus do not cause propagation of the fire beyond this fire zone. Safe shutdown components listed in Table 9A-2 for the adjacent fire zones are not susceptible to damage by the diluted and cooled smoke and gases from this fire zone.

Table 9A-2 lists the safe shutdown components located in this fire zone. The division A and C electrical penetrations listed in Table 9A-2 are conservatively assumed to be disabled as a result of a fire in this fire zone. The B and D electrical penetrations and their cable trays routed from the electrical penetrations up to the operating deck are functionally part of fire zone 1100 AF 11500. These two divisions are sufficient to perform applicable functions to achieve and maintain safe shutdown as described in Subsection 9A.2.7.

These division B and D electrical penetrations and their associated raceways are protected from a fire in this fire zone by a combination of barriers, distance and fire suppression systems. Noncombustible barriers of steel or steel-composite construction form vertical shaft(s) from the floor up to the operating deck, surrounding the division B and D penetrations and the associated cable trays. The significant combustible materials in this fire zone are the nonsafety-related cables routed in open cable trays. These cable trays are located at least 20 feet from the division B and D penetrations and their associated raceways, and they are protected by water spray suppression systems.

The passive core cooling system has two passive residual heat removal heat exchanger control valves which are located in this fire area. These valves are fail-open air-operated valves. They are located within several feet of each other. The valves are separated from each other by a noncombustible barrier of steel or steel composite materials. One of the valves is located close to the IRWST wall. This valve is assigned to division B. The cables for this valve are enclosed in conduit or enclosed raceways and routed up through the operating deck. Separate fire detectors are provided near each valve. The only combustibles in the area are the valves themselves and their cables. A fire that would affect these valves would be expected to start at one of the valves. The barrier protects the other valve from the initial effects of the fire. The fire detectors would alert the operators and allow

them to actuate the other valve before the fire could spread and damage it. These valves are qualified to operate with elevated temperatures of 340°F.

Reactor coolant system, and steam generator system instrumentation located in this fire zone are conservatively assumed to be disabled as a result of a fire in this fire zone. The redundant passive core cooling system instrumentation, reactor coolant system pressurizer, and steam generator system instrumentation located in fire zones 1100 AF 11206, 1100 AF 11300A, 1100 AF 11301, and 1100 AF 11500 are sufficient to perform the applicable functions to achieve and maintain safe shutdown.

Reactor coolant system temperature instrumentation located in fire zones 1000 AF 11301 and 1000 AF 11302 are sufficient to provide the monitoring function accomplished by the passive residual heat removal heat exchanger flow instrumentation located in this fire zone.

The reactor coolant system to chemical and volume control system stop valves located in this fire zone are conservatively assumed to be disabled as a result of a fire in this fire zone. The chemical and volume control system containment isolation valves located outside of this fire zone provide backup isolation capability to maintain the reactor coolant pressure boundary.

The redundant reactor coolant system hot leg flow instrumentation located in fire zones 1100 AF 11300A and 1100 AF 11301 is sufficient to perform applicable functions to achieve and maintain safe shutdown.

The chemical and volume control system and the liquid radwaste system containment isolation valves located outside the containment fire area are redundant to the containment isolation valves inside containment in this fire zone and are sufficient to perform the applicable functions to maintain containment integrity.

The redundant steam line pressure instruments located in fire area 1201 AF 05 for steam generator 1 and in fire area 1201 AF 06 for steam generator 2 are sufficient to perform the applicable functions to achieve and maintain safe shutdown.

The redundant core exit thermocouples located in fire zone 1100 AF 11500 are sufficient to provide the applicable safe shutdown monitoring function.

No fire in this zone can cause spurious actions which could cause a breach in the reactor coolant boundary or defeat safety-related decay heat removal capability or cause an increase in shutdown reactivity of the reactor.

9A.3.1.1.9 Fire Zone 1100 AF 11301

This fire zone is comprised of the following room(s):

Room No.	
11201	Steam generator compartment 1
11301	Steam generator 1 lower manway area
11401	Steam generator 1 tubesheet area
11501	Steam generator 1 operating deck
11601	Steam generator 1 feedwater nozzle area
11701	Steam generator 1 upper manway area

Safe Shutdown Evaluation

The quantity and arrangement of the combustible materials in this fire zone, and the characteristics of the barriers that separate this zone from other fire zones are such that a fire which damages safe shutdown components in this zone does not propagate to the extent that it damages redundant safe shutdown components in another fire zone.

The quantity of combustible materials in this fire zone is very low, consisting primarily of cable insulation related to the reactor coolant pump motors and other components in this fire zone. These cables are generally located at separate locations near the perimeter of the fire zone and there are no significant cable concentrations. This fire zone is separated from other fire zones (except fire zone 1100 AF 11500) by structural barriers or partial barriers. The bottom of this fire zone is the solid concrete floor of the steam generator compartment. Up to an elevation more than 17 feet above the operating deck the fire zone is enclosed by walls with a concrete thickness of more than one foot, except for access passageways to and from the pressurizer compartment (fire zone 1100 AF 11303) and the adjoining portion of the vertical access area (fire zone 1100 AF 11204), and the floor grating interface between the vertical access area and the steam generator 1 access room (fire zone 1100 AF 11303). Above the top of these concrete walls, the fire zone is open to the large air space above the operating deck (fire zone 1100 AF 11500). A fire does not propagate beyond this fire zone to the extent that it damages redundant safe shutdown components in another fire zone.

Depending on fire location, smoke and hot gases from a fire in this fire zone rise through the annular space surrounding the steam generator or through the pressurizer compartment (fire zone 1100 AF 11303) and into the air space in the upper portion of the containment (fire zone 1100 AF 11500). They are cooled by mixing with the air and by contact with structural surfaces and thus do not cause propagation of the fire beyond this fire zone. Safe shutdown components listed in Table 9A-2 for the adjacent fire zones are not susceptible to damage by the diluted and cooled smoke and gases from this fire zone.

Table 9A-2 lists the safe shutdown components located in this fire zone. Although the consequences of a fire are expected to be very limited, a fire in this fire zone is conservatively assumed to disable all of the safe shutdown components in this fire zone.

The redundant reactor coolant system hot leg/cold leg instrumentation located in fire zone 1100 AF 11302, and redundant steam generator system steam generator level instrumentation located in 1100 AF 11300B are sufficient to perform applicable functions to achieve and maintain safe shutdown.

The four divisions of reactor coolant system/reactor coolant pump bearing water temperature instrumentation are assumed to be disabled and would not be available to detect and provide a trip signal on a loss of component cooling water to the pump. If the fire in this fire zone does not disable the pump, the component cooling water flow to the pump will be unaffected by the fire and will continue to provide cooling water to the pump bearings until the pump is tripped by other means.

The reactor coolant system reactor coolant pump shaft speed instruments are conservatively assumed to be disabled. The redundant reactor coolant system hot leg flow instrumentation located in fire zones 1100 AF 11300A and 1100 AF 11300B is sufficient to perform applicable functions to achieve and maintain safe shutdown.

The four reactor coolant system reactor head vent valves are assumed to be disabled. If power is lost while in the closed position, the head vent valves will maintain reactor coolant pressure boundary integrity. Refer to Subsection 9A.3.7.1.1 for a discussion on spurious actuation of reactor coolant system reactor head vent valves.

No fire in this zone can cause spurious actions which could cause a breach in the reactor coolant boundary or defeat safety-related decay heat removal capability or cause an increase in shutdown reactivity of the reactor.

9A.3.1.1.10 Fire Zone 1100 AF 11302

This fire zone is comprised of the following room(s):

Room No.	
11202	Steam generator compartment 2
11302	Steam generator 2 lower manway area
11402	Steam generator 2 tubesheet area
11502	Steam generator 2 operating deck
11602	Steam generator 2 feedwater nozzle area
11702	Steam generator 2 upper manway area

Safe Shutdown Evaluation

The quantity and arrangement of the combustible materials in this fire zone, and the characteristics of the barriers that separate this zone from other fire zones are such that a fire which damages safe shutdown components in this zone does not propagate to the extent that it damages redundant safe shutdown components in another fire zone.

The quantity of combustible materials in this fire zone is very low, consisting primarily of cable insulation related to the reactor coolant pump motors and other components in this fire zone. These cables are generally located at separate locations near the perimeter of the fire zone and there are no significant cable concentrations. This fire zone is separated from other fire zones (except fire zone 1100 AF 11500) by structural barriers or partial barriers. The bottom of this fire zone is the solid concrete floor of the steam generator compartment. Up to an elevation of more than 17 feet above the operating deck the fire zone is enclosed by walls with a concrete thickness of more than one foot, except for access passageways from the vertical access area (fire zone 1100 AF 11204) and the maintenance floor (fire zone 1100 AF 11300B). Above the top of these concrete walls, the fire zone is open to the large air space above the operating deck (fire zone 1100 AF 11500). A fire does not propagate beyond this fire zone to the extent that it damages redundant safe shutdown components in another fire zone.

Smoke and hot gases from a fire in this fire zone rise through the annular space surrounding the steam generator into the air space in the upper portion of the containment (fire zone 1100 AF 11500). They are cooled by mixing with the air and by contact with structural surfaces and thus do not cause propagation of the fire beyond this fire zone. Safe shutdown components listed in Table 9A-2 for the adjacent fire zones are not susceptible to damage by the diluted and cooled smoke and gases from this fire zone.

Table 9A-2 lists the safe shutdown components located in this fire zone. Although the consequences of a fire are expected to be very limited, a fire in this fire zone is conservatively assumed to disable all of the safe shutdown components in this fire zone.

The redundant reactor coolant system hot leg/cold leg instrumentation located in fire zone 1100 AF 11301 are sufficient to perform applicable functions to achieve and maintain safe shutdown.

The four divisions of reactor coolant system/reactor coolant pump bearing water temperature instrumentation are assumed to be disabled and would not be available to detect and provide a trip signal on a loss of component cooling water to the pump. If the fire in this fire zone does not disable the pump, the component cooling water flow to the pump will be unaffected by the fire and will continue to provide cooling water to the pump bearings until the pump is tripped by other means.

The reactor coolant system reactor coolant pump shaft speed instruments are conservatively assumed to be disabled. The redundant reactor coolant system flow instrumentation located in fire zones 1100 AF 11300A and 1100 AF 11300B are sufficient to perform applicable functions to achieve and maintain safe shutdown.

No fire in this zone can cause spurious actions which could cause a breach in the reactor coolant boundary or defeat safety-related decay heat removal capability or cause an increase in shutdown reactivity of the reactor.

9A.3.1.1.11 Fire Zone 1100 AF 11303

This fire zone is comprised of the following room(s):

Room No.	
11303	Lower pressurizer compartment
11304	Steam generator 1 access room
11503	Upper pressurizer compartment

Safe Shutdown Evaluation

There are no safe shutdown components located in this fire zone.

The quantity and arrangement of the combustible materials in this fire zone, and the characteristics of the barriers that separate this zone from other fire zones are such that a fire in this zone does not propagate to the extent that it damages redundant safe shutdown components in another fire zone.

The quantity of combustible materials in this fire zone is very low, consisting primarily of the cable insulation for the pressurizer heaters. There are no significant cable concentrations. This fire zone is separated from other fire zones (except fire zone 1100 AF 11500) by structural barriers or partial barriers. The bottom of this fire zone is solid concrete except for floor grating in the steam generator 1 access room (above fire zone 1100 AF 11301). Up to an elevation more than 33 feet above the operating deck this fire zone is enclosed by walls with a minimum concrete thickness of more than one foot, except for access passageways to and from the steam generator 1 compartment (fire zone 1100 AF 11301) and a closed doorway from the maintenance floor (fire zone 1100 AF 11300B). Several feet above the top of these walls, a steel platform separates the top this fire zone from fire zone 1100 AF 11303A directly above. Between the top of the walls and this platform the sides of this fire zone are open to the large air space above the operating deck (fire zone 1100 AF 11500). A fire does not propagate beyond this fire zone to the extent that it damages redundant safe shutdown components in another fire zone.

Smoke and hot gases from a fire in this fire zone rise through the annular space surrounding the pressurizer into the air space in the upper portion of the containment (fire zone 1100 AF 11500). They are cooled by mixing with the air and by contact with structural surfaces and thus do not cause propagation of the fire beyond this fire zone. Safe shutdown components listed in Table 9A-2 for the adjacent fire zones are not susceptible to damage by the diluted and cooled smoke and gases from this fire zone.

No fire in this zone can cause spurious actions which could cause a breach in the reactor coolant boundary or defeat safety-related decay heat removal capability or cause an increase in shutdown reactivity of the reactor.

9A.3.1.1.12 Fire Zone 1100 AF 11303A

This fire zone is comprised of the following room(s):

Room No.	
11603	Lower automatic depressurization system valve area

Safe Shutdown Evaluation

There are no safe shutdown components located in this fire zone that are required to operate as a result of a fire.

The quantity and arrangement of the combustible materials in this fire zone, and the characteristics of the barriers that separate this zone from other fire zones are such that a fire in this zone does not propagate to the extent that it damages redundant safe shutdown components in another fire zone.

The quantity of combustible materials in this fire zone is very low, consisting primarily of the cable insulation for the automatic depressurization system valves. There are no significant cable concentrations. This fire zone is separated from other fire zones (except fire zone 1100 AF 11500) by structural barriers. Concrete/steel composite material provides separation from the pressurizer compartment (fire zone 1100 AF 11303). Concrete/steel composite material provides separation from the upper automatic depressurization system valve area (fire zone 1100 AF 11303B). The sides of this fire zone are open to the large containment air space above the operating deck (fire zone 1100 AF 11500). A fire does not propagate beyond this fire zone to the extent that it damages redundant safe shutdown components in another fire zone.

Smoke and hot gases from a fire in this fire zone are deflected horizontally by the ceiling into the surrounding air space in the upper portion of the containment (fire zone 1100 AF 11500). They are cooled by mixing with the air and by contact with structural surfaces and thus do not cause propagation of the fire beyond this fire zone. Safe shutdown components listed in Table 9A-2 for the adjacent fire zones are not susceptible to damage by the diluted and cooled smoke and gases from this fire zone.

No fire in this zone can cause spurious actions which could cause a breach in the reactor coolant boundary or defeat safety-related decay heat removal capability or cause an increase in shutdown reactivity of the reactor.

9A.3.1.1.13 Fire Zone 1100 AF 11303B

This fire zone is comprised of the following room(s):

Room No.	
11703	Upper automatic depressurization system valve area

Safe Shutdown Evaluation

There are no safe shutdown components located in this fire zone that are required to operate as a result of a fire.

The quantity and arrangement of the combustible materials in this fire zone, and the characteristics of the barriers that separate this zone from other fire zones are such that a fire in this zone does not propagate to the extent that it damages redundant safe shutdown components in another fire zone.

The quantity of combustible materials in this fire zone is very low, consisting primarily of the cable insulation for the automatic depressurization system valves. There are no significant cable concentrations. Concrete/steel composite material provides separation from the lower automatic depressurization system valve area (fire zone 1100 AF 11303A). The top and sides of this fire zone are open to the large containment air space above the operating deck (fire zone 1100 AF 11500), which has no nearby combustibles. A fire does not propagate beyond this fire zone to the extent that it damages redundant safe shutdown components in another fire zone.

Smoke and hot gases from a fire in this fire zone rise into the large air space in the upper portion of containment (fire zone 1100 AF 11500). They are cooled by mixing with the air and by contact with structural surfaces and thus do not cause propagation of the fire beyond this fire zone. Safe shutdown components listed in Table 9A-2 for the adjacent fire zones are not susceptible to damage by the diluted and cooled smoke and gases from this fire zone.

No fire in this zone can cause spurious actions which could cause a breach in the reactor coolant boundary or defeat safety-related decay heat removal capability or cause an increase in shutdown reactivity of the reactor.

9A.3.1.1.14 Fire Zone 1100 AF 11500

This fire zone is comprised of the following room(s):

Room No.	
11500	Operating deck
11504	Refueling cavity
11306	Division B/D Penetration Room

Safe Shutdown Evaluation

The quantity and arrangement of the combustible materials in this fire zone, and the characteristics of the barriers that separates this zone from other fire zones are such that a fire which damages safe shutdown components in this zone does not propagate to the extent that it damages redundant safe shutdown components in another fire zone.

The quantity of combustible materials in this fire zone is low, consisting primarily of cable insulation. There are small concentrations of cables in horizontal raceways around the circumference of this fire zone high above the operating deck, in vertical raceways at separate locations near the boundaries of this fire zone, and at the center of the fire zone in the vicinity of the reactor vessel integrated head package. This fire zone encompasses much of the containment. It is physically separated from fire zones below by the operating deck or the bottom of the refueling cavity, which have a concrete thicknesses of more than one foot, except for penetrations described in the evaluations of fire zones below this fire zone. There also is a few inch clearance annulus around the entire operating deck. The walls of this fire zone are the steel containment vessel or walls with a concrete thickness of more than one foot, with exceptions as described earlier for fire zones 1100 AF 11301, 1100 AF 11302, 1100 AF 11303, and 1100 AF 11303A & B. The boundary of this fire zone also includes the 3-hour fire barriers that protect the division B and D containment penetrations on elevation 107'-2" and the associated raceways from these penetrations up to the operating deck. A fire does not propagate beyond this fire zone to the extent that it damages redundant safe shutdown components in another fire zone.

Smoke and hot gases from a fire in this fire zone rise into the large air space above the operating deck. They are cooled by mixing with the air and by contact with structural surfaces and thus do not cause propagation of the fire beyond this fire zone. Safe shutdown components listed in Table 9A-2 for the adjacent fire zones are not susceptible to damage by the diluted and cooled smoke and gases from this fire zone.

Table 9A-2 lists the safe shutdown components located in this fire zone. Although the consequences of a fire are expected to be very limited, a fire in this fire zone is conservatively assumed to disable all of the safe shutdown components in this fire zone.

Control of all division B and D components in the containment is conservatively assumed to be disabled. The primary division A and C electrical cables that provide power supply to safe shutdown components in containment are located in 1100 AF 11300B and are sufficient to perform the applicable functions to achieve and maintain safe shutdown.

The in-core instrumentation system core exit temperature instrument termination cabinets located in this fire zone are conservatively assumed to be disabled as a result of a fire in this fire zone. The reactor coolant system hot leg temperature (wide range) instrumentation located in fire zones 1100 AF 11301 and 1100 AF 11302 provide a diverse means of observing temperature conditions in the reactor vessel to support the safe shutdown process.

The reactor coolant system narrow range level instrumentation is conservatively assumed to be disabled. The redundant reactor coolant system narrow range level instrumentation located in fire zone 1100 AF 11300B is sufficient to perform the applicable functions to achieve and maintain safe shutdown.

The central chilled water system containment isolation valve located outside the containment fire area is redundant to the containment isolation valve inside containment in this fire zone and is sufficient to perform the applicable functions to maintain containment integrity.

The redundant reactor coolant system pressurizer instrumentation and redundant reactor coolant system hot leg instrumentation located in 1100 AF 11300B are sufficient to perform applicable functions to achieve and maintain safe shutdown.

No fire in this zone can cause spurious actions which could cause a breach in the reactor coolant boundary or defeat safety-related decay heat removal capability or cause an increase in shutdown reactivity of the reactor.

9A.3.1.1.15 Fire Zone 1200 AF 12341

This fire zone is comprised of the following room(s):

Room No.	
12341	Middle annulus

Safe Shutdown Evaluation

The quantity and arrangement of the combustible materials in this fire zone, and the characteristics of the barriers that separate this zone from other fire zones are such that a fire does not propagate to or from this fire zone.

The quantity of combustible materials in this fire zone is low, consisting primarily of cable insulation in the non-Class 1E electrical penetration assemblies, located in the northeast quadrant of the fire zone. The Class 1E electrical penetration assemblies also pass through this fire zone, but are

enclosed by 3-hour fire barriers and are considered extensions of the associated Class 1E divisional fire areas on the other side of the shield building wall. This fire zone is physically separated from other fire zones by the steel wall of containment and by the steel and concrete vessel stiffener and flexible ventilation seal above, and it is separated from adjacent fire areas by the walls and floor of the shield building, which have concrete thicknesses of more than one foot, and the 3-hour fire barriers enclosing the Class 1E electrical penetrations. The access doorway to the middle annulus fire zone is closed by a door.

The radiologically controlled area ventilation system serves this fire area on a once-through basis. Smoke and hot gases are confined in this fire zone following automatic closure of the fire dampers on high temperature, while the balance of the radiologically controlled area ventilation system continues to operate at the discretion of the operator. There is no propagation of the fire beyond this fire zone. Smoke and gases are removed from the fire zone by reopening the fire dampers after a fire. The radiologically controlled area ventilation system exhausts the smoke and gases to the atmosphere.

Table 9A-2 lists the safe shutdown components located in this fire zone. The redundant passive containment cooling system safe shutdown components located in fire zone 1200 AF 01 are sufficient to perform applicable functions to achieve and maintain safe shutdown. The Class 1E electrical penetrations are separated from this fire zone by 3-hour fire barriers and are part of the associated divisional fire areas outside the shield building.

No fire in this zone can cause spurious actions which could cause a breach in the reactor coolant boundary or defeat safety-related decay heat removal capability or cause an increase in shutdown reactivity of the reactor.

9A.3.1.1.16 Fire Zone 1200 AF 12541

This fire zone is comprised of the following room(s):

Room No.	
12541	Upper annulus

Safe Shutdown Evaluation

The quantity and arrangement of the combustible materials in this fire zone, and the characteristics of the barriers that separate this zone from other fire zones are such that a fire does not propagate to or from this fire zone.

The quantity of combustible materials in this fire zone is extremely low, consisting primarily of cable insulation. There are no cable concentrations. This fire zone is physically separated from other fire zones by the steel wall of containment and the steel and concrete vessel stiffener and flexible ventilation seal below, and it is separated from adjacent fire areas by the walls of the shield building, which have a concrete thickness of more than one foot. Access doorways are closed by doors. The physical separation between this fire zone and fire zone 1270 AF 12701 are described in the evaluation for that zone. This fire zone communicates with the environment via the passive containment cooling system air inlets at the top perimeter of the shield building and the passive containment cooling system air outlet at the center of the shield building roof. These openings have screens that prevent the entry of external debris.

Smoke and hot gases from a fire in this fire zone rise to the top of the fire zone and into the atmosphere and thus do not cause propagation of a fire beyond this fire zone.

The safe shutdown components in this fire zone are the Division B and C electrical cables that serve the redundant passive containment cooling system valves and instruments located in the passive

containment cooling system valve room. Although the consequences of a fire are expected to be very limited, a fire in this fire zone is conservatively assumed to disable these safe shutdown valves and instruments.

The valves for each passive containment cooling system water delivery path are arranged with a normally open motor-operated valve and normally closed/fail open air-operated valve in series. If the fire causes a loss of power to the valves, the air-operated valves will open and passive containment cooling system flow, which has no adverse impact on achieving and maintaining safe shutdown, will be initiated. Refer to Subsection 9A.3.7.1.2 for a discussion of potential spurious actuation of a passive containment cooling system water delivery valve as a result of a fire.

The passive containment cooling system water delivery flow and storage tank level instrumentation are conservatively assumed to be disabled as a result of a fire in this fire zone. The applicable function of verification of passive containment cooling system water delivery can be performed by visual observation via access to the passive containment cooling system air diffuser from the passive containment cooling system valve room.

No fire in this zone can cause spurious actions which could cause a breach in the reactor coolant boundary or defeat safety-related decay heat removal capability or cause an increase in shutdown reactivity of the reactor.

9A.3.1.1.17 Fire Zone 1270 AF 12701

This fire zone is comprised of the following room(s):

Room No.	
12701	Passive containment cooling system valve room
S06	Stairwell

Safe Shutdown Evaluation

The quantity and arrangement of the combustible materials in this fire zone, and the characteristics of the barriers that separate this zone from other fire zones are such that a fire does not propagate to or from this fire zone.

The quantity of combustible materials in this fire zone is low, consisting primarily of cable insulation related to the valves and instruments in this fire zone. There are no cable concentrations. This fire zone is physically separated from fire zone 1200 AF 12541 by structural partitions and closed doorways.

In the unlikely event of a fire, the fire brigade would approach the PCS valve room (Room 12701, Fire Zone 1270 AF, Fire Area 1000 AF 01) by using stairwell S03 or the adjacent elevator attached to the outside wall on the shield building. The fire brigade would egress from stairwell S03 (Fire Area 1204 AF 02) into the lower level of the PCS valve room (Room 12701) at the El. 264′-6″ platform (Fire Zone 1270 AF, Fire Area 1000 AF 01). Two types of portable fire extinguishers (a dry chemical and a water fire extinguisher) are provided at this lower level for manual fire fighting. The fire brigade would proceed up the inclined stairs S06 to the upper level of the PCS valve room (Room 12701) located on El. 286′-6″. Two types of portable fire extinguishers (a dry chemical and a water fire extinguisher) are also provided at this upper level for manual fire fighting.

Smoke and hot gases from a fire in this fire zone are exhausted by normal operation of the room exhaust fan to fire zone 1200 AF 12541, where they rise through openings in the top of that fire zone into the atmosphere. There are no combustible materials in the vicinity of the exhaust location and

thus the smoke and hot gases do not cause propagation of a fire beyond this fire zone. If the exhaust fan is disabled by the fire, smoke and gases are later removed using portable fans and ductwork.

Table 9A-2 lists the safe shutdown components located in this fire zone. Although it is unlikely that all components would be damaged, a fire in this fire zone is conservatively assumed to disable all of the safe shutdown valves and instruments in this fire zone.

The valves for each passive containment cooling system water delivery path are arranged in three flow paths. Two paths have a normally open motor-operated valve and normally closed/fail open air-operated valve in series. The third path has a normally open motor-operated and a normally closed motor operated valve in series. If the fire causes a loss of power to the air-operated valves, they will open and passive containment cooling system flow, which has no adverse impact on achieving and maintaining safe shutdown, will be initiated. Refer to Subsection 9A.3.7.1.2 for a discussion of potential spurious actuation of a passive containment cooling system water delivery valve as a result of a fire.

The passive containment cooling system water delivery flow and storage tank level instrumentation are conservatively assumed to be disabled as a result of a fire in this fire zone. The applicable function of verification of passive containment cooling system water delivery can be performed by visual observation via access to the passive containment cooling system air diffuser from the passive containment cooling system valve room or from the upper annulus.

No fire in this zone can cause spurious actions which could cause a breach in the reactor coolant boundary or defeat safety-related decay heat removal capability or cause an increase in shutdown reactivity of the reactor.

9A.3.1.1.18 Fire Zone 1250 AF 12555

This fire zone is comprised of the following room(s):

Room No.	
12555	Main control room emergency habitability system air storage/operating deck staging area

Safe Shutdown Evaluation

The quantity and arrangement of the combustible materials in this fire zone, and the characteristics of the barriers that separate this zone from other fire zones are such that a fire does not propagate to or from this fire zone.

The quantity of combustible materials in this fire zone is normally low, consisting primarily of cable insulation, but concentrations of transient combustibles may be present in the floor area outside the main equipment hatch. This fire zone is separated from adjacent fire areas by 3-hour fire barriers and it is separated from adjacent containment fire zones 1100 AF 11500 and 1200 AF 12541 by the main equipment hatch and its enclosure and the shield building wall, which has a concrete thickness of more than one foot.

Smoke and hot gases from a fire are confined in this fire zone following automatic closure of the fire dampers on high temperature and thus do not cause propagation of the fire beyond this fire zone. Smoke and gases are removed from the fire area by reopening the fire dampers after a fire. The radiologically controlled area ventilation system exhausts the smoke and gases to the atmosphere.

This fire zone contains no components required for safe shutdown after a fire. The pressurized main control room emergency habitability system air storage bottles are not required for safe shutdown after a fire, but are protected from fire-induced overpressure by pressure relief valves.

No fire in this zone can cause spurious actions which could cause a breach in the reactor coolant boundary or defeat safety-related decay heat removal capability or cause an increase in shutdown reactivity of the reactor.

9A.3.1.2 Auxiliary Building - Nonradiologically Controlled Areas

General Arrangement

The safe shutdown systems and components located in the nonradiologically controlled area are portions of the protection and safety monitoring system and the Class 1E dc system, and containment isolation.

The safe shutdown components in the protection and safety monitoring system are the instrumentation and control cabinets located in the nonradiologically controlled area on level 3 (elevation 100′-0″). The safe shutdown components in the Class 1E dc system are the Class 1E batteries on level 1 (elevation 66′-6″) and level 2 (elevation 82′-6″) and the dc electrical equipment, also on level 2.

The nonradiologically controlled areas of the auxiliary building are designed to provide separation between the mechanical and electrical equipment areas.

The piping compartments in the nonradiologically controlled area are the main steam isolation valve compartments on levels 4 and 5 (elevations 117′-6″ and 135′-3″, respectively) and the valve/piping penetration compartment on level 3 (elevation 100′-0″). The mechanical equipment rooms in the nonradiologically controlled area are the HVAC compartments on levels 4 and 5.

The nonradiologically controlled areas of the auxiliary building are also designed to provide separation between the Class 1E and the non-Class 1E electrical equipment.

Smoke Control

Table 9A-4 identifies the ventilation systems serving fire areas containing Class 1E electrical components. This section describes the approach to smoke control for fire areas in the nonradiologically controlled portion of the auxiliary building that contain the main Class 1E electrical equipment rooms served by the nuclear island nonradioactive ventilation system (VBS). Smoke control for fire areas containing other Class 1E components, such as valves, instrumentation and electrical cable, is discussed in the text for the individual fire areas.

The Class 1E electrical equipment room fire areas have been designed to prevent the migration of smoke, hot gases, and fire suppressant to the extent that they could adversely affect safe shutdown capabilities, including operator actions. These fire areas are separated from each other and from other plant areas by 3-hour fire barriers. Smoke from a fire in the turbine building or other nearby fire areas is prevented from affecting the Class 1E areas by isolation of the nuclear island nonradioactive ventilation system outdoor air intakes, as described in Subsection 9.4.1.

The nuclear island nonradioactive ventilation system is designed to control the migration of smoke and hot gases produced by a fire. As described in Subsection 9.4.1, two independent ventilation subsystems, located in separate fire areas, serve the Class 1E electrical equipment rooms. The division A and C Class 1E electrical room HVAC subsystem has three distribution headers. One header supplies the two division A electrical equipment room fire areas, a second header supplies the division C electrical equipment room fire area, and a third header supplies other related

fire areas. The division B and D class 1E electrical room HVAC subsystem also has three distribution headers. One header supplies the division B electrical equipment room fire area, a second header supplies the division D electrical equipment room fire area, and a third header supplies other related fire areas.

A fire affecting a division A or C electrical equipment room fire area does not affect operation of the ventilation subsystem serving the division B & D electrical equipment room fire areas and vice versa. In addition, a fire affecting an electrical equipment room fire area affects the operation of only one of the three distribution headers in the subsystem. As described in Subsection 9.4.1.2.3.2, the affected subsystem continues to provide ventilation to the remaining fire areas served by the other two distribution headers.

Similarly, the ventilation subsystem serving the main control room and the ventilation subsystem serving the remote shutdown room operate independently of each other and are located in separate fire areas. A fire affecting the main control room does not affect operation of the ventilation subsystem serving the remote shutdown room and vice versa.

The migration of smoke and hot gases produced by a fire occurring in a Class 1E electrical equipment room fire area is controlled by operation of the nuclear island nonradioactive ventilation system as described in Subsection 9.4.1.2.3. Further information on smoke control is provided in the discussions for the individual fire areas.

9A.3.1.2.1 Division A Electrical Rooms

9A.3.1.2.1.1 Fire Area 1202 AF 04

This fire area is subdivided into the following fire zones:

Fire Zone	Room No.	
● 1212 AF 12101	12101	Division A battery room
● 1222 AF 12201	12201	Division A dc equipment room
● 1232 AF 12301	12301	Division A instrumentation and control room

There are no systems in this fire area which normally contain radioactive material.

Fire Detection and Suppression Features

- Fire detectors
- Hose station(s)
- Portable fire extinguishers

Smoke Control Features

This fire area is served by one of the three air distribution headers of the division A & C Class 1E electrical room HVAC subsystem of the nuclear island nonradioactive ventilation system (VBS). Combination fire-smoke dampers close automatically in response to a smoke detector signal or high temperature to control the spread of fire and smoke. The ventilation system continues to provide ventilation to the unaffected fire areas, which includes the Division C fire area (1202 AF 03). The system may be manually realigned to the once-through ventilation mode to minimize the potential for migration of smoke. If the exhaust fire-smoke damper for this fire area is operable, the damper may be reopened to further reduce the migration of smoke. After the fire, smoke is removed from the fire area by reopening the fire dampers and operating the ventilation system in the once-through ventilation mode. Smoke from a fire in this fire area does not affect safe shutdown components in fire areas that are served by other ventilation systems, subsystems, or air distribution headers. Safe

shutdown components in these fire areas, identified in Table 9A-4, are sufficient to achieve and maintain safe shutdown.

Backdraft dampers are provided in the ventilation system supply and return ducts to the dc equipment room and to the instrumentation and control room, to delay smoke migration between these fire zones and facilitate operator action to preclude postulated spurious actuations.

Fire Protection Adequacy Evaluation

A fire in this fire area is detected by a fire detector which produces an audible alarm locally and both visual and audible alarms in the main control room and the security central alarm station. The fire is extinguished manually using hose streams or portable extinguishers.

Combustible materials in this fire area are listed in Table 9A-3, and primarily consist of plastic battery cell containers and cable insulation for cables associated with the electrical equipment in this fire area. There are concentrations of battery cells on opposite walls of the battery room fire zone. There are small concentrations of cable in the electrical cabinets located on opposite walls of the dc equipment room fire zone. There are small concentrations of cable overhead and in the electrical cabinets located in the middle of the instrument and control room fire zone. This is a light hazard fire area and the rate of fire growth is expected to be slow. Three-hour fire barriers provide adequate separation from adjacent fire areas and the fire is contained within the fire area. The three fire zones in this fire area are separated from each other by 1-hour fire barriers, which limits the spread of fire within the fire area.

The ventilation system does not contribute to the spread of the fire or smoke as described in the Smoke Control Features section above.

Fire Protection System Integrity

An evaluation of the consequences of inadvertent operation of an automatic suppression system is not required because there are no such systems in this fire area. An evaluation of the consequences of a break in a fire protection line is not required because no such lines pass through or terminate in this fire area.

Safe Shutdown Evaluation

Table 9A-2 lists the safe shutdown components located in this fire area. These division A electrical rooms are physically separated from the other safety-related divisions and by 3-hour fire barriers. In the event of a fire in one of these rooms, it is assumed that control of all division A components is lost. Because of the physical separation, the fire does not adversely affect the other safety-related electrical divisions. For this event, the division B, C, and D components identified in Table 9A-2 are sufficient to achieve and maintain safe shutdown.

Control room dedicated switches which are used to initiate engineered safety features at the system level are connected to the engineered safety features actuation cabinets using two-pole, energize-to-actuate, ungrounded dc circuits.

Spurious actuation from control room dedicated switches which could lead to a breach of reactor coolant system pressure boundary, loss of decay heat removal function, or loss of shutdown reactivity control is prevented by the use of dual two-pole, energize-to-actuate, ungrounded dc circuits, which require at least four simultaneous hot shorts of proper polarity for spurious actuation.

Following detection of a fire in the instrumentation and control room, the operators can close the automatic depressurization system stage 4 block valve, then remove actuation power from this division using the battery transfer switch located in the dc equipment room to disconnect the battery and remote control from the control room to remove input power from the battery charger and

regulating transformer. This operator action will prevent spurious actuation of motor operated valves and squib valves resulting from multiple hot shorts in the instrumentation and control room.

Following detection of a fire in the dc equipment control room, the operators can close the automatic depressurization system stage 4 block valve, then remove cabinet power from this division using the input power switches on the instrumentation and control cabinets. This operator action will prevent spurious smoke-induced actuation of motor operated valves and squib valves resulting smoke-related integrated circuit failures in the instrumentation and control room.

Power to the passive residual heat removal heat exchanger inlet isolation valve is normally locked out at power to prevent spurious closing.

Neither a fire nor fire suppression activities in this fire area affect the safe shutdown capability of components located in adjacent fire areas.

9A.3.1.2.1.2 Fire Area 1242 AF 02

This fire area is comprised of the following room(s):

Room No.	
12412	Electrical penetration room division A

There are no systems in this fire area which normally contain radioactive material.

Fire Detection and Suppression Features

- Fire detectors
- Hose station(s)
- Portable fire extinguishers

Smoke Control Features

This fire area is served by one of the three air distribution headers of the division A & C Class 1E electrical room HVAC subsystem of the nuclear island nonradioactive ventilation system (VBS). Combination fire-smoke dampers close automatically in response to a smoke detector signal or high temperature to control the spread of fire and smoke. The ventilation system continues to provide ventilation to the unaffected fire areas, which includes the division C electrical penetration room (in fire area 1202 AF 03). The system may be manually realigned to the once-through ventilation mode to minimize the potential for migration of smoke. If the exhaust fire-smoke damper for this fire area is operable, the damper may be reopened to further reduce the migration of smoke. After the fire, smoke is removed from the fire area by reopening the fire dampers and operating the ventilation system in the once-through ventilation mode. Smoke from a fire in this fire area does not affect safe shutdown components in fire areas that are served by other ventilation systems, subsystems, or air distribution headers. Safe shutdown components in these fire areas, identified in Table 9A-4, are sufficient to achieve and maintain safe shutdown.

Fire Protection Adequacy Evaluation

A fire in this fire area is detected by a fire detector which produces an audible alarm locally and both visual and audible alarms in the main control room and the security central alarm station. The fire is extinguished manually using hose streams or portable extinguishers.

Combustible materials in this fire area are listed in Table 9A-3, and primarily consist of cable insulation for cables associated with the containment electrical penetrations. There are small concentrations of cable at the electrical penetrations and in the overhead cable trays. This is a light

hazard fire area and the rate of fire growth is expected to be slow. The boundary of this fire area extends to include the electrical penetration assemblies within the containment annulus, which are enclosed by 3-hour fire barriers. Three-hour fire barriers provide adequate separation from adjacent fire areas and the fire is contained within the fire area.

The ventilation system does not contribute to the spread of the fire or smoke as described in the Smoke Control Features section above.

Fire Protection System Integrity

An evaluation of the consequences of inadvertent operation of an automatic suppression system is not required because there are no such systems in this fire area. An evaluation of the consequences of a break in a fire protection line is not required because no such lines pass through or terminate in this fire area.

Safe Shutdown Evaluation

Table 9A-2 lists the safe shutdown components located in this fire area. The division A penetration room is physically separated from the other safety-related divisions and nonsafety-related equipment by 3-hour fire barriers. In the event of a fire in this room, it is assumed that control of all division A active components is lost. Because of the physical separation, the fire does not adversely affect the other safety-related electrical divisions. For this event, the division B, C, and D components identified in Table 9A-2 are sufficient to achieve and maintain safe shutdown.

Following detection of a fire in this fire area, the operators can close the automatic depressurization system stage 4 block valve, then remove actuation power from this division using the battery transfer switch located in the dc equipment room to disconnect the battery and remote control from the control room to remove input power from the battery charger and regulating transformer. This operator action will prevent spurious actuation of motor operated valves and squib valves resulting from multiple hot shorts in the penetration room.

Power to the passive residual heat removal heat exchanger inlet isolation valve is normally locked out at power to prevent spurious closing.

Neither a fire nor fire suppression activities in this fire area affect the safe shutdown capability of components located in adjacent fire areas.

9A.3.1.2.2 Division B Electrical Rooms

9A.3.1.2.2.1 Fire Area 1201 AF 02

This fire area contains division B electrical rooms. The fire area is subdivided into the following fire zones:

Fire Zone	Room No.	
● 1211 AF 12104	12104	Division B battery room 1
● 1221 AF 12204	12204	Division B battery room 2
● 1222 AF 12207	12207	Division B dc equipment room
● 1231 AF 12304	12304	Division B instrumentation and control/penetration room

There are no systems in this fire area which normally contain radioactive material.

Fire Detection and Suppression Features

- Fire detectors
- Hose station(s)
- Portable fire extinguishers

Smoke Control Features

This fire area is served by one of the three air distribution headers of the division B & D Class 1E electrical room HVAC subsystem of the nuclear island nonradioactive ventilation system (VBS). Combination fire-smoke dampers close automatically in response to a smoke detector signal or high temperature to control the spread of fire and smoke. The ventilation system continues to provide ventilation to the unaffected fire areas, which includes the division D fire area (1201 AF 03). The system may be manually realigned to the once-through ventilation mode to minimize the potential for migration of smoke. If the exhaust fire-smoke damper for this fire area is operable, the damper may be reopened to further reduce the migration of smoke. After the fire, smoke is removed from the fire area by reopening the fire dampers and operating the ventilation system in the once-through ventilation mode. Smoke from a fire in this fire area does not affect safe shutdown components in fire areas that are served by other ventilation systems, subsystems, or air distribution headers. Safe shutdown components in these fire areas, identified in Table 9A-4, are sufficient to achieve and maintain safe shutdown.

Backdraft dampers are provided in the ventilation system supply and return ducts to the dc equipment room and to the instrumentation and control/penetration room, to delay smoke migration between these fire zones and facilitate operator action to preclude postulated spurious actuations.

Fire Protection Adequacy Evaluation

A fire in this fire area is detected by a fire detector, which produces an audible alarm locally and both visual and audible alarms in the main control room and the security central alarm station. The fire is extinguished manually using hose streams or portable extinguishers.

Combustible materials in this fire area are listed in Table 9A-3, and primarily consist of plastic battery cell containers and cable insulation for cables associated with the electrical equipment and containment penetrations in this fire area. There are concentrations of battery cells on opposite walls of each of the two battery room fire zones. There are small concentrations of cable overhead and in the electrical cabinets located on opposite walls of the dc equipment room fire zone. There are small concentrations of cable overhead, at the electrical penetrations, and in the electrical cabinets located in the middle of the instrumentation and control/penetration room fire zone. This is a light hazard fire area and the rate of fire growth is expected to be slow. The boundary of this fire area extends to include the electrical penetration assemblies within the containment annulus, which are enclosed by 3-hour fire barriers. Three-hour fire barriers provide adequate separation from adjacent fire areas and the fire is contained within the fire area. The battery rooms are also separated from the adjacent division B electrical rooms by 1-hour fire barriers, and the dc equipment room is separated from adjacent division B electrical rooms by 1-hour fire barriers, which limit the spread of fire within the fire area.

The ventilation system does not contribute to the spread of the fire or smoke as described in the Smoke Control Features section above.

Fire Protection System Integrity

An evaluation of the consequences of inadvertent operation of an automatic suppression system is not required because there are no such systems in this fire area. An evaluation of the consequences of a break in a fire protection line is not required because no such lines pass through or terminate in this fire area.

Safe Shutdown Evaluation

Table 9A-2 lists the safe shutdown components located in this fire area. Division B electrical rooms are physically separated from the other safety-related divisions and nonsafety-related equipment by 3-hour fire barriers. In the event of a fire in a division B electrical room, it is assumed that control of all division B active components is lost. Because of the physical separation, the fire does not adversely affect the other safety-related electrical divisions. For this event, the division A, C, and D components identified in Table 9A-2 are sufficient to achieve and maintain safe shutdown.

Control room dedicated switches which are used to initiate engineered safety features at the system level are connected to the engineered safety features actuation cabinets using two-pole, energize-to-actuate, ungrounded dc circuits.

Spurious actuation from control room dedicated switches which could lead to a breach of reactor coolant system pressure boundary, loss of decay heat removal function, or loss of shutdown reactivity control is prevented by the use of dual two-pole, energize-to-actuate, ungrounded dc circuits, which require at least four simultaneous hot shorts of proper polarity for spurious actuation.

Following detection of a fire in the instrumentation and control/penetration room, the operators can close the automatic depressurization system stage 4 block valve, then remove actuation power from this division using the battery transfer switch located in the dc equipment room to disconnect the battery and remote control from the control room to remove input power from the battery charger and regulating transformer. This operator action will prevent spurious actuation of motor operated valves and squib valves resulting from multiple hot shorts in the instrumentation and control/penetration room.

Following detection of a fire in the dc equipment control room, the operators can close the automatic depressurization system stage 4 block valve, then remove cabinet power from this division using the input power switches on the instrumentation and control cabinets. This operator action will prevent spurious smoke-induced actuation of motor operated valves and squib valves resulting smoke-related integrated circuit failures in the instrumentation and control room.

Power to the normal residual heat removal hot leg suction isolation valves is normally locked out at power to prevent spurious opening.

Neither a fire nor fire suppression activities in this fire area affect the safe shutdown capability of components located in adjacent fire areas.

9A.3.1.2.2.2 Fire Area 1220 AF 01

This fire area is subdivided into the following fire zones:

Fire Zone	Room No.	
● 1222 AF 12212	12212	Division B reactor coolant pump trip switchgear room
● 1222 AF 12213	12213	Spare room
● 1220 AF 12211	12211	Corridor

There are no systems in this fire area which normally contain radioactive material.

Fire Detection and Suppression Features

- Fire detectors
- Hose station(s)
- Portable fire extinguishers

Smoke Control Features

This fire area is served by one of the three air distribution headers of the division A & C Class 1E electrical room HVAC subsystem of the nuclear island nonradioactive ventilation system (VBS). Combination fire-smoke dampers close automatically in response to a smoke detector signal or high temperature to control the spread of fire and smoke. The ventilation system continues to provide ventilation to the unaffected fire areas, including the fire area for the division C trip switchgear room (1202 AF 03). Fire areas 1200 AF 03 and 1210 AF 01 are served by the same air distribution header as this fire area, but they continue to receive ventilation because they have separate supply ducts. The system may be manually realigned to the once-through ventilation mode to minimize the potential for migration of smoke. If the exhaust fire-smoke damper for this fire area is operable, the damper may be reopened to further reduce the migration of smoke. After the fire, smoke is removed from the fire area by reopening the fire dampers and operating the ventilation system in the once-through ventilation mode. Smoke from a fire in this fire area does not affect safe shutdown components in fire areas that are served by other ventilation systems, subsystems, or air distribution headers. Safe shutdown components in these fire areas, identified in Table 9A-4, are sufficient to achieve and maintain safe shutdown.

Fire Protection Adequacy Evaluation

A fire in this fire area is detected by a fire detector which produces an audible alarm locally and both visual and audible alarms in the main control room and the security central alarm station. The fire is extinguished manually using hose streams or portable extinguishers.

Combustible materials in this fire area are listed in Table 9A-3, and primarily consist of cable insulation. There are small concentrations of cable in the electrical cabinets located on opposite walls of the dc equipment room fire zone. There are small concentrations of cable overhead and in the electrical cabinets in the reactor coolant pump trip switchgear room and spare room fire zones. There are small concentrations of cable overhead and at the east end of the corridor fire zone. This is a light hazard fire area and the rate of fire growth is expected to be slow. Three-hour fire barriers provide adequate separation from adjacent fire areas and the fire is contained within the fire area.

The ventilation system does not contribute to the spread of the fire or smoke as described in the Smoke Control Features section above.

Fire Protection System Integrity

An evaluation of the consequences of inadvertent operation of an automatic suppression system is not required because there are no such systems in this fire area. See Section 3.4 for a discussion of the consequences of a break in a fire protection line in this fire area.

Safe Shutdown Evaluation

Table 9A-2 lists the safe shutdown components located in this fire area. A fire in this fire area is assumed to disable the safe shutdown components in the fire area.

The reactor coolant pumps can be tripped by the redundant division C reactor coolant pump trip switchgear, located in fire area 1202 AF 03. The division B and D cable tray in the fire area includes signals to the reactor trip switchgear and inputs to other division protection logic. Inputs from divisions A and C are sufficient to trip the reactor when needed, or the reactor can be tripped manually. Loss of division B and D data input to the division A and C protection logic does not disable the safe shutdown functions of the four Class 1E divisions.

Cable trays in the fire areas include signals to B and D isolation valves outside containment. Containment isolation is provided by redundant containment isolation valves, located in another fire area inside containment. Redundant division C valves control water flow from the passive

containment cooling system storage tank. The components identified in Table 9A-2 are sufficient to achieve and maintain safe shutdown.

Neither a fire nor fire suppression activities in this fire area affect the safe shutdown capability of components located in adjacent fire areas.

No fire in this fire area can cause spurious actions which could cause a breach in the reactor coolant boundary or defeat safety-related decay heat removal capability or cause an increase in shutdown reactivity of the reactor.

9A.3.1.2.3 Division C Electrical Rooms

9A.3.1.2.3.1 Fire Area 1202 AF 03

This fire area contains division C electrical rooms. The fire area is subdivided into the following fire zones:

Fire Zone	Room No.	
● 1212 AF 12102	12102	Division C battery room 1
● 1222 AF 12202	12202	Division C battery room 2
● 1222 AF 12203	12203	Division C dc equipment room
● 1232 AF 12302	12302	Division C instrumentation and control room
● 1232 AF 12312	12312	Division C reactor coolant pump trip switchgear room
● 1232 AF 12313	12313	Instrumentation and control/division C penetration room

There are no systems in this fire area which normally contain radioactive material.

Fire Detection and Suppression Features

- Fire detectors
- Hose station(s)
- Portable fire extinguishers

Smoke Control Features

This fire area is served by one of the three air distribution headers of the division A & C Class 1E electrical room HVAC subsystem of the nuclear island nonradioactive ventilation system (VBS). Combination fire-smoke dampers close automatically in response to a smoke detector signal or high temperature to control the spread of fire and smoke. The ventilation system continues to provide ventilation to the unaffected fire areas, which includes the division A fire area (1202 AF 04). The system may be manually realigned to the once-through ventilation mode to minimize the potential for migration of smoke. If the exhaust fire-smoke damper for this fire area is operable, the damper may be reopened to further reduce the migration of smoke. After the fire, smoke is removed from the fire area by reopening the fire dampers and operating the ventilation system in the once-through ventilation mode. Smoke from a fire in this fire area does not affect safe shutdown components in fire areas that are served by other ventilation systems, subsystems, or air distribution headers. Safe shutdown components in these fire areas, identified in Table 9A-4, are sufficient to achieve and maintain safe shutdown.

Backdraft dampers are provided in the ventilation system supply and return ducts to the dc equipment room and to the instrumentation and control room, and in the supply duct to the

penetration room, to delay smoke migration between these fire zones and facilitate operator action to preclude postulated spurious actuations.

Fire Protection Adequacy Evaluation

A fire in this fire area is detected by a fire detector which produces an audible alarm locally and both visual and audible alarms in the main control room and the security central alarm station. The fire is extinguished manually using hose streams or portable extinguishers.

Combustible materials in this fire area are listed in Table 9A-3, and primarily consist of plastic battery cell containers and cable insulation for cables associated with the electrical equipment and containment penetrations in this fire area. There are concentrations of battery cells on opposite walls of each of the two battery room fire zones. There are small concentrations of cable overhead and in the electrical cabinets located on opposite walls of the dc equipment room fire zone. There are small concentrations of cable overhead and in the electrical cabinets located in the middle of the instrument and control room fire zone. There are small concentrations of cable overhead and at the electrical penetrations in the instrumentation and control/penetration room fire zone. This is a light hazard fire area and the rate of fire growth is expected to be slow. The boundary of this fire area extends to include the electrical penetration assemblies within the containment annulus, which are enclosed by 3-hour fire barriers. Three-hour fire barriers provide adequate separation from adjacent fire areas and the fire is contained within the fire area. The battery rooms are also separated from the adjacent division C electrical rooms by 1-hour fire barriers, and the dc equipment room is separated from adjacent division C electrical rooms by 1-hour fire barriers, which limit the spread of fire within the fire area.

The ventilation system does not contribute to the spread of the fire or smoke as described in the Smoke Control Features section above.

Fire Protection System Integrity

An evaluation of the consequences of inadvertent operation of an automatic suppression system is not required because there are no such systems in this fire area. An evaluation of the consequences of a break in a fire protection line is not required because no such lines pass through or terminate in this fire area.

Safe Shutdown Evaluation

Table 9A-2 lists the safe shutdown components located in this fire area. Division C electrical rooms are physically separated from the other safety-related divisions and nonsafety-related equipment by 3-hour fire barriers. In the event of a fire in a division C electrical room, it is assumed that control of all division C components is lost. Because of the physical separation, the fire does not adversely affect the other safety-related electrical divisions. The reactor coolant pumps can be tripped by the redundant division B reactor coolant pump trip switchgear, located in fire area 1220 AF 01. For this event, the division A, B, and D components identified in Table 9A-2 are sufficient to achieve and maintain safe shutdown.

Control room dedicated switches which are used to initiate engineered safety features at the system level are connected to the engineered safety features actuation cabinets using two-pole, energize-to-actuate, ungrounded dc circuits.

Spurious actuation from control room dedicated switches which could lead to a breach of reactor coolant system pressure boundary, loss of decay heat removal function, or loss of shutdown reactivity control is prevented by the use of dual two-pole, energize-to-actuate, ungrounded dc circuits, which require at least four simultaneous hot shorts of proper polarity for spurious actuation.

Following detection of a fire in either the instrumentation and control room or the instrumentation and control/division C penetration room, the operators can close the automatic depressurization system stage 4 block valve, then remove actuation power from this division using the battery transfer switch located in the dc equipment room to disconnect the battery and remote control from the control room to remove input power from the battery charger and regulating transformer. This operator action will prevent spurious actuation of motor operated valves and squib valves resulting from multiple hot shorts in the instrumentation and control room or the instrumentation and control/division C penetration room.

Following detection of a fire in the dc equipment control room, the operators can close the automatic depressurization system stage 4 block valve, then remove cabinet power from this division using the input power switches on the instrumentation and control cabinets. This operator action will prevent spurious smoke-induced actuation of motor operated valves and squib valves resulting smoke-related integrated circuit failures in the instrumentation and control room.

Neither a fire nor fire suppression activities in this fire area affect the safe shutdown capability of components located in adjacent fire areas.

9A.3.1.2.4 Division D Electrical Rooms

9A.3.1.2.4.1 Fire Area 1201 AF 03

The fire area is subdivided into the following fire zones:

Fire Zone	Room No.	
● 1211 AF 12105	12105	Division D battery room
● 1221 AF 12205	12205	Division D dc equipment room
● 1231 AF 12305	12305	Division D instrumentation and control/penetration room

There are no systems in this fire area which normally contain radioactive material.

Fire Detection and Suppression Features

- Fire detectors
- Hose station(s)
- Portable fire extinguishers

Smoke Control Features

This fire area is served by one of the three air distribution headers of the division B & D Class 1E electrical room HVAC subsystem of the nuclear island nonradioactive ventilation system (VBS). Combination fire-smoke dampers close automatically in response to a smoke detector signal or high temperature to control the spread of fire and smoke. The ventilation system continues to provide ventilation to the unaffected fire areas, which includes the division B fire area (1201 AF 02). The system may be manually realigned to the once-through ventilation mode to minimize the potential for migration of smoke. If the exhaust fire-smoke damper for this fire area is operable, the damper may be reopened to further reduce the migration of smoke. After the fire, smoke is removed from the fire area by reopening the fire dampers and operating the ventilation system in the once-through ventilation mode. Smoke from a fire in this fire area does not affect safe shutdown components in fire areas that are served by other ventilation systems, subsystems, or air distribution headers. Safe shutdown components in these fire areas, identified in Table 9A-4, are sufficient to achieve and maintain safe shutdown.

Backdraft dampers are provided in the ventilation system supply and return ducts to the dc equipment room and to the instrumentation and control/penetration room, to delay smoke migration between these fire zones and facilitate operator action to preclude certain postulated spurious actuations.

Fire Protection Adequacy Evaluation

A fire in this fire area is detected by a fire detector which produces an audible alarm locally and both visual and audible alarms in the main control room and the security central alarm station. The fire is extinguished manually using hose streams or portable extinguishers.

Combustible materials in this fire area are listed in Table 9A-3, and primarily consist of plastic battery cell containers and cable insulation for cables associated with the electrical equipment and containment penetrations in this fire area. There are concentrations of battery cells on opposite walls of the battery room fire zone. There are small concentrations of cable overhead and in the electrical cabinets located on opposite walls of the dc equipment room fire zone. There are small concentrations of cable overhead, at the electrical penetrations, and in the electrical cabinets located in the middle of the instrumentation and control/penetration room fire zone. This is a light hazard fire area and the rate of fire growth is expected to be slow. The boundary of this fire area extends to include the electrical penetration assemblies within the containment annulus, which are enclosed by 3-hour fire barriers. Three-hour fire barriers provide adequate separation from adjacent fire areas and the fire is contained within the fire area. The three fire zones in this fire area are separated from each other by 1-hour fire barriers, which limits the spread of fire within the fire area.

The ventilation system does not contribute to the spread of the fire or smoke as described in the Smoke Control Features section above.

Fire Protection System Integrity

An evaluation of the consequences of inadvertent operation of an automatic suppression system is not required because there are no such systems in this fire area. An evaluation of the consequences of a break in a fire protection line is not required because no such lines pass through or terminate in this fire area.

Safe Shutdown Evaluation

Table 9A-2 lists the safe shutdown components located in this fire area. These division D electrical rooms are physically separated from the other safety-related divisions by 3-hour fire barriers. In the event of a fire in one of these rooms, it is assumed that control of all division D components is lost. Because of the physical separation, the fire does not adversely affect the other safety-related electrical divisions. For this event, the division A, B, and C components identified in Table 9A-2 are sufficient to achieve and maintain safe shutdown.

Control room dedicated switches which are used to initiate engineered safety features at the system level are connected to the engineered safety features actuation cabinets using two-pole, energize-to-actuate, ungrounded dc circuits.

Spurious actuation from control room dedicated switches which could lead to a breach of reactor coolant system pressure boundary, loss of decay heat removal function, or loss of shutdown reactivity control is prevented by the use of dual two-pole, energize-to-actuate, ungrounded dc circuits, which require at least four simultaneous hot shorts of proper polarity for spurious actuation.

Following detection of a fire in the instrumentation and control/penetration room, the operators can close the automatic depressurization system stage 4 block valve, then remove actuation power from this division using the battery transfer switch located in the dc equipment room to disconnect the battery and remote control from the control room to remove input power from the battery charger and

regulating transformer. This operator action will prevent spurious actuation of motor operated valves and squib valves resulting from multiple hot shorts in the instrumentation and control/penetration room.

Following detection of a fire in the dc equipment control room, the operators can close the automatic depressurization system stage 4 block valve, then remove cabinet power from this division using the input power switches on the instrumentation and control cabinets. This operator action will prevent spurious smoke-induced actuation of motor operated valves and squib valves resulting smoke-related integrated circuit failures in the instrumentation and control room.

Power to the normal residual heat removal hot leg suction isolation valves is normally locked out at power to prevent spurious opening.

Neither a fire nor fire suppression activities in this fire area affect the safe shutdown capability of components located in adjacent fire areas.

9A.3.1.2.5 Principal Class 1E Areas

9A.3.1.2.5.1 Fire Area 1242 AF 01

This fire area consists of the main control room. The fire area is subdivided into the following fire zones:

Fire Zone	Room No.	
● 1242 AF 12401A	12401	Main control area/tagging room/vestibule
● 1242 AF 12401B	12401	Shift supervisor/clerk/operator area

There are no systems in this fire area which normally contain radioactive material.

Fire Detection and Suppression Features

- Fire detectors (including detectors in the subfloor spaces)
- Hose station(s)
- Portable fire extinguishers

Smoke Control Features

This fire area is served by the main control room/control support area HVAC subsystem of the nuclear island nonradioactive ventilation system (VBS). Combination fire-smoke dampers close automatically in response to a smoke detector signal or high temperature to control the spread of fire and smoke. The system may be manually realigned to the once-through ventilation mode to minimize the potential for migration of smoke. If the exhaust fire-smoke damper for this fire area is operable, the damper may be reopened to further reduce the migration of smoke. After the fire, smoke is removed from the fire area by reopening the fire dampers and operating the ventilation system in the once-through ventilation mode. Smoke from a fire in this fire area does not affect safe shutdown components in fire areas that are served by other ventilation systems, subsystems, or air distribution headers. Safe shutdown components in these fire areas, identified in Table 9A-4, are sufficient to achieve and maintain safe shutdown.

Fire Protection Adequacy Evaluation

Since the main control room is continuously manned, a fire is likely to be initially detected by an operator. Otherwise, a fire in this fire area is detected by a fire detector, which produces visual and audible alarms in the main control room and the security central alarm station. The fire is extinguished manually using portable extinguishers or, if necessary, using hose streams.

Combustible materials in this fire area are listed in Table 9A-3, and primarily consist of cable insulation and paper. There are concentrations of cable under the floor in the north and east portions of this fire area and within the control consoles and display panels in the main control area. There are concentrations of paper in the main control area, the tagging room and offices. Most of this paper is contained within metal filing cabinets, desks, or bookcases. This is a light hazard fire area and the rate of fire growth is expected to be slow. The fire area is continuously manned and prompt manual fire suppression is expected.

Generally, three-hour fire barriers provide adequate separation from adjacent fire areas and the fire is contained within the fire area. Due to the need to provide passive cooling capability into the main control room ceilings, it will not be protected against fires from within the main control room. The ceiling will be a fire barrier from fires in the room above the main control room.

The two fire zones are also separated from each other by a 1-hour fire barrier, which limits the spread of fire within the fire area. Within fire zone 1242 AF 12401A the wall that separates the main control area from the tagging room is not fire-rated because it does not extend to the ceiling. This design improves the ceiling heat-absorbing characteristics provided for post-accident main control room habitability.

The ventilation system does not contribute to the spread of the fire or smoke as described in the Smoke Control Features section above.

Fire Protection System Integrity

An evaluation of the consequences of inadvertent operation of an automatic suppression system is not required because there are no such systems in this fire area. An evaluation of the consequences of a break in a fire protection line is not required because no such lines pass through or terminate in this fire area.

Safe Shutdown Evaluation

Table 9A-2 lists the safe shutdown components located in this fire area. The main control room contains circuits from the four Class 1E electrical divisions. Electrical separation to and inside the control panels is maintained per industry standards. The remote shutdown workstation is provided as an alternate to the main control room. The transfer of operations to the remote shutdown workstation is controlled by a transfer switch located outside the main control room. In the event of a fire in the main control room, control may be transferred to the remote shutdown workstation, depending on the extent of the fire. For a small fire, control is maintained in the main control room, and the potential for damage or spurious signals is limited. For larger postulated fires, the main control room is evacuated and control is transferred to the remote shutdown workstation. Once control is transferred, spurious control signals potentially caused by the fire are isolated from the actuated devices by the transfer switch. In this event, the main control room is assumed to be lost for the duration of the event. Safe shutdown is controlled from the remote shutdown workstation. The extent of spurious signals is limited by the time to transfer control to the remote shutdown workstation.

Spurious actuation from control room dedicated switches which could lead to a breach of reactor coolant system pressure boundary, loss of decay heat removal function, or loss of shutdown reactivity control is prevented by the use of dual two-pole, energize-to-actuate, ungrounded dc circuits, which require at least four simultaneous hot shorts of proper polarity for spurious actuation. Following control room evacuation, the dedicated switches are disabled by the transfer switch.

Neither a fire nor fire suppression activities in this fire area affect the safe shutdown capability of components located in adjacent fire areas.

9A.3.1.2.5.2 Fire Area 1232 AF 01

This fire area is comprised of the following room(s):

Room No.	
12303	Remote shutdown room

There are no systems in this fire area which normally contain radioactive material.

Fire Detection and Suppression Features

- Fire detectors
- Hose station(s)
- Portable fire extinguishers

Smoke Control Features

This fire area is served by one of the three air distribution headers of the division B & D Class 1E electrical room HVAC subsystem of the nuclear island nonradioactive ventilation system (VBS). Combination fire-smoke dampers close automatically in response to a smoke detector signal or high temperature to control the spread of fire and smoke. The ventilation system continues to provide ventilation to the unaffected fire areas, except for adjacent stairwell fire area 1202 AF 05 which is ventilated via this fire area. The system may be manually realigned to the once-through ventilation mode to minimize the potential for migration of smoke. If the exhaust fire-smoke damper for this fire area is operable, the damper may be reopened to further reduce the migration of smoke. After the fire, smoke is removed from the fire area by reopening the fire dampers and operating the ventilation system in the once-through ventilation mode. Smoke from a fire in this fire area does not affect safe shutdown components in fire areas that are served by other ventilation systems, subsystems, or air distribution headers. Safe shutdown components in these fire areas, identified in Table 9A-4, are sufficient to achieve and maintain safe shutdown.

Fire Protection Adequacy Evaluation

A fire in this fire area is detected by a fire detector which produces an audible alarm locally and both visual and audible alarms in the main control room and the security central alarm station. The fire is extinguished manually using hose streams or portable extinguishers.

Combustible materials in this fire area are listed in Table 9A-3, and primarily consist of cable insulation and paper. There are concentrations of cable under the floor and within the control console. There are concentrations of paper, most of which is contained within metal filing cabinets or bookcases. This is a light hazard fire area and the rate of fire growth is expected to be slow. Three-hour fire barriers provide adequate separation from adjacent fire areas and the fire is contained within the fire area.

The ventilation system does not contribute to the spread of the fire or smoke as described in the Smoke Control Features section above.

Fire Protection System Integrity

An evaluation of the consequences of inadvertent operation of an automatic suppression system is not required because there are no such systems in this fire area. An evaluation of the consequences of a break in a fire protection line is not required because no such lines pass through or terminate in this fire area.

Safe Shutdown Evaluation

Table 9A-2 lists the safe shutdown components located in this fire area. The remote shutdown room contains circuits from the four Class 1E electrical divisions. Electrical separation to and inside the remote shutdown room is maintained per industry standards. The remote shutdown room is an alternate to the main control room. The transfer of operations to the remote shutdown workstation is controlled by a transfer switch set located in the remote shutdown workstation area. In the unlikely event that the fire damages the transfer switch set, causing transfer of control from the main control room to the remote shutdown workstation, the operator restores control to the main control room by de-energizing fire area 1202 AF 05 (stair S05). Safe shutdown is achieved using the safe shutdown components listed in Table 9A-2.

Most remote shutdown workstation controls use soft-controls which communicate over multiplexed data channels. Fire-induced spurious actuation from these multiplexed soft controls is not assumed. Fire-induced actuations from the dedicated switches in this area are prevented during normal operation by the transfer switch logic, which only enables operation from the remote shutdown workstation dedicated switches when control is transferred to the remote shutdown workstation.

Neither a fire nor fire suppression activities in this fire area affect the safe shutdown capability of components located in adjacent fire areas.

9A.3.1.2.5.3 Fire Area 1243 AF 01

This fire area is comprised of the following room(s):

Room No.	
12423	Reactor trip switchgear 1

There are no systems in this fire area which normally contain radioactive material.

Fire Detection and Suppression Features

- Fire detectors
- Hose station(s)
- Portable fire extinguishers

Smoke Control Features

The equipment room HVAC subsystem of the annex/auxiliary building non-radioactive ventilation system (VXS) servicing this fire area stops upon detection of smoke in the supply duct. Combination fire-smoke dampers close automatically in response to a smoke detector signal or high temperature to control the spread of fire and smoke. Other VXS subsystems continue to provide ventilation to the unaffected fire areas. This subsystem may be restarted and manually realigned to the once-through smoke exhaust ventilation mode to minimize the potential migration of smoke. If the exhaust fire-smoke damper for this fire area is operable, the damper may be reopened to further reduce the migration of smoke. After the fire, smoke is removed from this fire area by reopening the fire dampers and operating the ventilation system in the smoke exhaust ventilation mode.

Fire Protection Adequacy Evaluation

A fire in this fire area is detected by a fire detector which produces an audible alarm locally and both visual and audible alarms in the main control room and the security central alarm station. The fire is extinguished manually using hose streams or portable extinguishers.

Combustible materials in this fire area are listed in Table 9A-3, and primarily consist of cable insulation for cables associated with the reactor trip switchgear, located in the center of this small fire

area. This is a light hazard fire area and the rate of fire growth is expected to be slow. Three-hour fire barriers provide adequate separation from adjacent fire areas and the fire is contained within the fire area.

The ventilation system does not contribute to the spread of the fire or smoke as described in the Smoke Control Features section above.

Fire Protection System Integrity

An evaluation of the consequences of inadvertent operation of an automatic suppression system is not required because there are no such systems in this fire area. An evaluation of the consequences of a break in a fire protection line is not required because no such lines pass through or terminate in this fire area.

Safe Shutdown Evaluation

Table 9A-2 lists the safe shutdown components located in this fire area. This fire area contains cable from each of the four Class 1E electrical divisions. This cable provides trip input from each of the four divisions and is separated per industry standards. The safety-related trip inputs are normally energized, so a fire in this area may result in a reactor trip. In the event the fire generates multiple hot shorts, interfering with the reactor trip signal, a reactor trip can be produced in the redundant trip cabinets located outside of this fire area in fire area 1243 AF 02. Furthermore, the reactor can be tripped with the diverse actuation system described in Section 7.7.

This fire does not affect other equipment in the Class 1E divisions. Therefore, the safe shutdown components listed in Table 9A-2 are available to achieve and maintain safe shutdown.

Neither a fire nor fire suppression activities in this fire area affect the safe shutdown capability of components located in adjacent fire areas.

No fire in this fire area can cause spurious actions which could cause a breach in the reactor coolant boundary or defeat safety-related decay heat removal capability or cause an increase in shutdown reactivity of the reactor.

9A.3.1.2.5.4 Fire Area 1243 AF 02

This fire area is comprised of the following room(s):

Room No.	
12422	Reactor trip switchgear 2

There are no systems in this fire area which normally contain radioactive material.

Fire Detection and Suppression Features

- Fire detectors
- Hose station(s)
- Portable fire extinguishers

Smoke Control Features

The equipment room HVAC subsystem of the annex/auxiliary building non-radioactive ventilation system (VXS) servicing this fire area stops upon detection of smoke in the supply duct. Combination fire-smoke dampers close automatically in response to a smoke detector signal or high temperature to control the spread of fire and smoke. Other VXS subsystems continue to provide ventilation to the unaffected fire areas. This subsystem may be restarted and manually realigned to the once-through

smoke exhaust ventilation mode to minimize the potential migration of smoke. If the exhaust fire-smoke damper for this fire area is operable, the damper may be reopened to further reduce the migration of smoke. After the fire, smoke is removed from this fire area by reopening the fire dampers and operating the ventilation system in the smoke exhaust ventilation mode.

Fire Protection Adequacy Evaluation

A fire in this fire area is detected by a fire detector which produces an audible alarm locally and both visual and audible alarms in the main control room and the security central alarm station. The fire is extinguished manually using hose streams or portable extinguishers.

Combustible materials in this fire area are listed in Table 9A-3, and primarily consist of cable insulation for cables associated with the reactor trip switchgear, located in the center of this small fire area. This is a light hazard fire area and the rate of fire growth is expected to be slow. Three-hour fire barriers provide adequate separation from adjacent fire areas and the fire is contained within the fire area.

The ventilation system does not contribute to the spread of the fire or smoke as described in the Smoke Control Features section above.

Fire Protection System Integrity

An evaluation of the consequences of inadvertent operation of an automatic suppression system is not required because there are no such systems in this fire area. An evaluation of the consequences of a break in a fire protection line is not required because no such lines pass through or terminate in this fire area.

Safe Shutdown Evaluation

Table 9A-2 lists the safe shutdown components located in this fire area. This fire area contains cable from each of the four Class 1E electrical divisions. This cable provides trip input from each of the four divisions and is separated per industry standards. The safety-related trip inputs are normally energized, so a fire in this area may result in a reactor trip. In the event the fire generates multiple hot shorts, interfering with the reactor trip signal, a reactor trip can be produced in the redundant trip cabinets located outside of this fire area in fire area 1243 AF 01. Furthermore, the reactor can be tripped with the diverse actuation system described in Section 7.7.

This fire does not affect other equipment in the Class 1E divisions. Therefore, the safe shutdown components listed in Table 9A-2 are available to achieve and maintain safe shutdown.

Neither a fire nor fire suppression activities in this fire area affect the safe shutdown capability of components located in adjacent fire areas.

No fire in this fire area can cause spurious actions which could cause a breach in the reactor coolant boundary or defeat safety-related decay heat removal capability or cause an increase in shutdown reactivity of the reactor.

9A.3.1.2.5.5 Fire Area 1210 AF 01

The fire area is subdivided into the following fire zones:

Fire Zone	Room No.	
● 1210 AF 12111	12111	Corridor
● 1212 AF 12103	12103	Spare battery room
● 1212 AF 12112	12112	Spare room
● 1212 AF 12113	12113	Spare battery charger room

There are no systems in this fire area which normally contain radioactive material.

Fire Detection and Suppression Features

- Fire detectors
- Hose station(s)
- Portable fire extinguishers

Smoke Control Features

This fire area is served by one of the three air distribution headers of the division A & C Class 1E electrical room HVAC subsystem of the nuclear island nonradioactive ventilation system (VBS). Combination fire-smoke dampers close automatically in response to a smoke detector signal or high temperature to control the spread of fire and smoke. The ventilation system continues to provide ventilation to the unaffected fire areas, except for fire area 1220 AF 01 which is ventilated by ducts that are isolated by a fire in this fire area. The ventilation system may be manually realigned to the once-through ventilation mode to minimize the potential for migration of smoke. If the exhaust fire-smoke damper for this fire area is operable, the damper may be reopened to further reduce the migration of smoke. After the fire, smoke is removed from the fire area by reopening the fire dampers and operating the ventilation system in the once-through ventilation mode. Smoke from a fire in this fire area does not affect safe shutdown components in fire areas that are served by other ventilation systems, subsystems, or air distribution headers. Safe shutdown components in these fire areas, identified in Table 9A-4, are sufficient to achieve and maintain safe shutdown.

If the spare batteries are being used as a backup power source for any division, a fire in this fire area is assumed to disable that division. Smoke from a fire in this fire area does not adversely affect components associated with divisions redundant to that supplied by the spare battery. Fire area 1200 AF 03 is served by the same air distribution header as this fire area, but it continues to receive ventilation because it has a separate supply duct. Fire area 1220 AF 01 is isolated by combination fire-smoke dampers in response to a smoke detector signal. The division B reactor trip switchgear and the division B and D electrical cable in this fire area is not sensitive to the small quantity of smoke that may leak into this fire area.

Fire Protection Adequacy Evaluation

A fire in this fire area is detected by a fire detector which produces an audible alarm locally and both visual and audible alarms in the main control room and the security central alarm station. The fire is extinguished manually using hose streams or portable extinguishers.

Combustible materials in this fire area are listed in Table 9A-3, and primarily consist of plastic battery cell containers and cable insulation for cables associated with the spare batteries and the spare battery charger. There are concentrations of battery cells on opposite walls of the spare battery room fire zone. There are small concentrations of cable along the north wall of the spare battery charger room fire zone. There are assumed to be small concentrations of ordinary combustibles in the spare

room. There are small concentrations of cable overhead in the eastern portion of corridor fire zone. This is a light hazard fire area and the rate of fire growth is expected to be slow. Three-hour fire barriers provide adequate separation from adjacent fire areas and the fire is contained within the fire area. The battery room is also separated from the other fire zones within this fire area by a 1-hour fire barrier, which limits the spread of fire within the fire area.

The ventilation system does not contribute to the spread of the fire or smoke as described in the Smoke Control Features section above.

Fire Protection System Integrity

An evaluation of the consequences of inadvertent operation of an automatic suppression system is not required because there are no such systems in this fire area. The consequences of a break in a fire protection line in this fire area were considered in the evaluation of internal flooding in Section 3.4.

Safe Shutdown Evaluation

Table 9A-2 lists the safe shutdown components located in this fire area. The spare batteries may be connected as a backup power source for any one of the four Class 1E electrical divisions. The terminations of the cables to these divisions from the spare batteries are not normally energized or connected, so a fire in this area has no impact on the unconnected divisions. If the spare batteries are being used as a backup to a Class 1E division, then the consequence of a fire in this area is the same as a fire in the battery room of the division to which they are connected.

Neither a fire nor fire suppression activities in this fire area affect the safe shutdown capability of components located in adjacent fire areas.

No fire in this fire area can cause spurious actions which could cause a breach in the reactor coolant boundary or defeat safety-related decay heat removal capability or cause an increase in shutdown reactivity of the reactor.

9A.3.1.2.6 Non-Class 1E Electrical Rooms

9A.3.1.2.6.1 Fire Area 1230 AF 02

The fire area is comprised of the following room:

Room No.	
12321	Non-Class 1E equipment/penetration room

There are no systems in this fire area which normally contain radioactive material.

Fire Detection and Suppression Features

- Fire detectors
- Preaction sprinklers
- Hose station(s)
- Portable fire extinguishers

Smoke Control Features

The equipment room HVAC subsystem of the annex/auxiliary building non-radioactive ventilation system (VXS) servicing this fire area stops upon detection of smoke in the supply duct. Combination fire-smoke dampers close automatically in response to a smoke detector signal or high temperature to control the spread of fire and smoke. Other VXS subsystems continue to provide ventilation to the

unaffected fire areas. This subsystem may be restarted and manually realigned to the once-through smoke exhaust ventilation mode to minimize the potential migration of smoke. If the exhaust fire-smoke damper for this fire area is operable, the damper may be reopened to further reduce the migration of smoke. After the fire, smoke is removed from this fire area by reopening the fire dampers and operating the ventilation system in the smoke exhaust ventilation mode.

Fire Protection Adequacy Evaluation

A fire in this fire area is detected by a fire detector which produces an audible alarm locally and both visual and audible alarms in the main control room and the security central alarm station. The fire is extinguished by the preaction sprinkler system or manually using hose streams or portable extinguishers.

Combustible materials in this fire area are listed in Table 9A-3, and primarily consist of cable insulation for cables associated with the electrical equipment and containment penetrations in this fire area. There are small concentrations of cable overhead, at the electrical penetrations, and at the electrical cabinets located along the east and west walls of room 12321. This is a light hazard fire area and the rate of fire growth is expected to be slow. Three-hour fire barriers provide adequate separation from adjacent fire areas and the fire is contained within the fire area. An automatic suppression system is provided to increase the availability of non-safety related systems required to achieve cold shutdown.

The ventilation system does not contribute to the spread of the fire or smoke as described in the Smoke Control Features section above.

Fire Protection System Integrity

An evaluation of the consequences of inadvertent operation of an automatic suppression system in this fire area is considered in the evaluation of internal flooding in Section 3.4.

Safe Shutdown Evaluation

Table 9A-2 lists the safe shutdown components located in this fire area. The electrical equipment in this area is non-Class 1E; however, some division B and D cables are routed through this area. In the event of a fire, the division B and D cabling in this area can be damaged. This damage can result in loss of control of equipment serviced by these cables. Other components in divisions B and D are not affected.

This fire can also disable the division B and D inputs to the reactor trip switchgear. The signals from the remaining two divisions are sufficient to trip the reactor. Furthermore, the reactor can be tripped with the diverse actuation system described in Section 7.7.

Neither a fire nor fire suppression activities in this fire area affect the safe shutdown capability of components located in adjacent fire areas.

9A.3.1.2.6.2 Fire Area 1240 AF 01

The fire area is comprised of the following room:

Room No.	
12421	Non-Class 1E equipment/penetration room

There are no systems in this fire area which normally contain radioactive material.

Fire Detection and Suppression Features

- Fire detectors
- Hose station(s)
- Portable fire extinguishers

Smoke Control Features

The equipment room HVAC subsystem of the annex/auxiliary building non-radioactive ventilation system (VXS) servicing this fire area stops upon detection of smoke in the supply duct. Combination fire-smoke dampers close automatically in response to a smoke detector signal or high temperature to control the spread of fire and smoke. Other VXS subsystems continue to provide ventilation to the unaffected fire areas. This subsystem may be restarted and manually realigned to the once-through smoke exhaust ventilation mode to minimize the potential migration of smoke. If the exhaust fire-smoke damper for this fire area is operable, the damper may be reopened to further reduce the migration of smoke. After the fire, smoke is removed from this fire area by reopening the fire dampers and operating the ventilation system in the smoke exhaust ventilation mode.

Fire Protection Adequacy Evaluation

A fire in this fire area is detected by a fire detector which produces an audible alarm locally and both visual and audible alarms in the main control room and the security central alarm station. The fire is extinguished using hose streams or portable extinguishers.

Combustible materials in this fire area are listed in Table 9A-3, and primarily consist of cable insulation for cables associated with the electrical equipment and containment penetrations in this fire area. There are small concentrations of cable overhead, at the electrical penetrations, and at the RCC rod control cabinets in the southern portion of room 12321. This is a light hazard fire area and the rate of fire growth is expected to be slow. Three-hour fire barriers provide adequate separation from adjacent fire areas and the fire is contained within the fire area.

The ventilation system does not contribute to the spread of the fire or smoke as described in the Smoke Control Features section above.

Fire Protection System Integrity

An evaluation of the consequences of inadvertent operation of an automatic suppression system is not required because there are no such systems in this fire area. An evaluation of the consequences of a break in a fire protection line is not required because no such lines pass through or terminate in this fire area.

Safe Shutdown Evaluation

Table 9A-2 lists the safe shutdown components located in this fire area. The electrical equipment in this area is non-Class 1E; however, some division A and C cables are routed through this area. In the event of a fire, the division A and C cabling in this area can be damaged. This damage can result in loss of control of equipment serviced by these cables. Other components in divisions A and C are not affected.

This postulated fire can disable control of the division A containment isolation valves outside containment. For this event, containment isolation is provided by the redundant containment isolation valves located inside containment outside of this fire area.

Such a fire can also disable control of the divisions A and C passive containment cooling system isolation valves. The redundant division B passive containment cooling system isolation valves are not affected. Therefore, the safe shutdown capability of the passive containment cooling system is maintained.

This fire can also disable the division A and C inputs to the reactor trip switchgear. The signals from the remaining two divisions are sufficient to trip the reactor. Furthermore, the reactor can be tripped with the diverse actuation system described in Section 7.7.

Neither a fire nor fire suppression activities in this fire area affect the safe shutdown capability of components located in adjacent fire areas.

No fire in this fire area can cause spurious actions which could cause a breach in the reactor coolant boundary or defeat safety-related decay heat removal capability or cause an increase in shutdown reactivity of the reactor.

9A.3.1.2.7 Mechanical/Piping Areas

9A.3.1.2.7.1 Fire Area 1201 AF 04

This fire area consists of two nuclear island nonradioactive ventilation system equipment rooms servicing divisions B and D equipment rooms. Division B and D safe shutdown equipment is located within the fire area. The fire area is subdivided into the following fire zones:

Fire Zone	Room No.	
● 1241 AF 12405	12405	Lower nuclear island nonradioactive ventilation system divisions B and D equipment room (117’-6")
● 1251 AF 12505	12505	Upper nuclear island nonradioactive ventilation system divisions B and D equipment room (135’-3")

There are no systems in this fire area which normally contain radioactive material.

Fire Detection and Suppression Features

- Fire detectors
- Hose station(s)
- Portable fire extinguishers

Smoke Control Features

This fire area houses and is served by the division B & D Class 1E electrical room HVAC subsystem of the nuclear island nonradioactive ventilation system (VBS). Combination fire-smoke dampers close automatically in response to a smoke detector signal or high temperature to control the spread of fire and smoke. Closure of these fire dampers interrupts the operation of the division B & D Class 1E electrical room HVAC subsystem. Operation of the independent division A & C Class 1E electrical room HVAC subsystem continues unaffected. Smoke is subsequently removed from the fire area by using portable exhaust fans and flexible ductwork. Smoke from a fire in this fire area does not affect safe shutdown components in fire areas that are served by other ventilation systems and subsystems. The division A and C electrical cables in fire area 1230 AF 01 are unaffected by the small quantity of smoke that may leak into that fire area. Safe shutdown components in these fire areas, identified in Table 9A-4, are sufficient to achieve and maintain safe shutdown.

Fire Protection Adequacy Evaluation

A fire in this fire area is detected by a fire detector which produces an audible alarm locally and both visual and audible alarms in the main control room and the security central alarm station. The fire is extinguished manually using hose streams or portable extinguishers.

Combustible materials in this fire area are listed in Table 9A-3, and primarily consist of electrical cable insulation for cables supplying fans and valves within this fire area. There are cable

concentrations overhead and in the west half of each fire zone. This is a light hazard fire area and the rate of fire growth is expected to be slow. Three-hour fire barriers provide adequate separation from adjacent fire areas and the fire is contained within the fire area.

The ventilation system does not contribute to the spread of the fire or smoke as described in the Smoke Control Features section above.

Fire Protection System Integrity

An evaluation of the consequences of inadvertent operation of an automatic suppression system is not required because there are no such systems in this fire area. The consequences of a break in a fire protection line in this fire area were considered in the evaluation of internal flooding in Section 3.4.

Safe Shutdown Evaluation

Table 9A-2 lists the safe shutdown components located in this fire area.

A fire in this fire area is conservatively assumed to disable control of all division D active components, as well as the compressed and instrument air system, component cooling water system, passive core cooling system and central chilled water system containment isolation valves within the fire area. The redundant containment isolation valves in the lines for the compressed and instrument air system, component cooling water system, passive core cooling system and central chilled water system are located inside the containment (fire area 1000 AF 01) are sufficient to perform the applicable functions to achieve and maintain safe shutdown.

The redundant steam generator 1 steam line pressure instrumentation located in fire zone 1100 AF 11300B is sufficient to perform the applicable functions to achieve and maintain safe shutdown.

The steam generator system steam generator 1 startup feedwater flow instrumentation is assumed to be disabled. The steam generator system steam generator 1 wide range level instrumentation located in fire zone 1100 AF 11300B provides a diverse means of performing the applicable function of generating a passive residual heat removal actuation signal to achieve and maintain safe shutdown.

The redundant steam generator 2 steam line pressure instrumentation located in fire zone 1100 AF 11300B is sufficient to perform the applicable functions to achieve and maintain safe shutdown.

The steam generator system steam generator 2 startup feedwater flow instrumentation is assumed to be disabled. The steam generator system steam generator 2 wide range level instrumentation located in fire area 1000 AF 01 provides a diverse means of performing the applicable function of generating a passive residual heat removal actuation signal to achieve and maintain safe shutdown.

The remaining division A, B and C components located in other fire areas are sufficient to perform the applicable functions to achieve and maintain safe shutdown.

Neither a fire nor fire suppression activities in this fire area affect the safe shutdown capability of components located in adjacent fire areas.

No fire in this fire area can cause spurious actions which could cause a breach in the reactor coolant boundary or defeat safety-related decay heat removal capability or cause an increase in shutdown reactivity of the reactor.

9A.3.1.2.7.2 Fire Area 1201 AF 05

This fire area is subdivided into the following fire zones:

Fire Zone	Room No.	
● 1241 AF 12506	12406	Lower main steam isolation valve compartment A
	12506	Upper main steam isolation valve compartment A
● 1231 AF 12306	12306	Valve/piping penetration room

There are no systems in this fire area which normally contain radioactive material.

Fire Detection and Suppression Features

- Fire detectors
- Hose station(s)
- Portable fire extinguishers

Smoke Control Features

Each of the two fire zones in this fire area is served by independent air handling units of the annex/ auxiliary buildings nonradioactive HVAC system (VXS), located within the fire zones served. No ventilating system ducts penetrate the MSIV compartment fire zone. One supply duct enters the valve piping penetration room from the turbine building. A fire damper in this duct closes automatically on high temperature to control the spread of fire and smoke. After the fire, smoke is removed from the fire area by using portable exhaust fans and flexible ductwork. Smoke from a fire in this fire area does not affect safe shutdown components in fire areas that are served by other ventilation systems or subsystems. Safe shutdown components in these fire areas, identified in Table 9A-4, are sufficient to achieve and maintain safe shutdown.

Fire Protection Adequacy Evaluation

A fire in this fire area is detected by a fire detector which produces an audible alarm locally and both visual and audible alarms in the main control room and the security central alarm station. The fire is extinguished manually using hose streams or portable extinguishers.

Combustible materials in this fire area are listed in Table 9A-3, and primarily consist of cable insulation for cables associated with the motor-operated valves, fans and other components in this fire area. Small quantities of lubricating oil are contained within the housings of some of these components. There are small concentrations of cable overhead in each room. This is a light hazard fire area and the rate of fire growth is expected to be slow. Three-hour fire barriers provide adequate separation from adjacent fire areas and the fire is contained within the fire area.

The recirculation type ventilation system does not contribute to the spread of the fire or smoke to other fire areas.

Fire Protection System Integrity

An evaluation of the consequences of inadvertent operation of an automatic suppression system is not required because there are no such systems in this fire area. The consequences of a break in a fire protection line in this fire area were considered in the evaluation of internal flooding in Section 3.4.

Safe Shutdown Evaluation

Table 9A-2 lists the safe shutdown components located in this fire area.

A fire in this fire area is assumed to disable the safe shutdown components in the fire area. The redundant chemical and volume control system containment isolation valves located inside containment outside of this fire area are sufficient to perform the applicable functions to maintain containment integrity. The steam generator, main steam line, feedwater line, and blowdown line piping located inside containment outside of this fire area is sufficient to perform the applicable functions to maintain containment integrity.

Neither a fire nor fire suppression activities in this fire area affect the safe shutdown capability of components located in adjacent fire areas.

No fire in this fire area can cause spurious actions which could cause a breach in the reactor coolant boundary or defeat safety-related decay heat removal capability or cause an increase in shutdown reactivity of the reactor.

9A.3.1.2.7.3 Fire Area 1201 AF 06

This fire area is comprised of the following room(s):

Room No.	
12404	Lower main steam isolation valve compartment B
12504	Upper main steam isolation valve compartment B

Fire Detection and Suppression Features

- Fire detectors
- Hose station(s)
- Portable fire extinguishers

Smoke Control Features

This fire area is served by independent air handling units of the annex/auxiliary buildings nonradioactive HVAC system (VXS), located within the fire zones served. No ventilating system ducts penetrate the fire area. After the fire, smoke is removed from the fire area by using portable exhaust fans and flexible ductwork. Smoke from a fire in this fire area does not affect safe shutdown components in fire areas that are served by other ventilation systems or subsystems. Safe shutdown components in these fire areas, identified in Table 9A-4, are sufficient to achieve and maintain safe shutdown.

Fire Protection Adequacy Evaluation

A fire in this fire area is detected by a fire detector which produces an audible alarm locally and both visual and audible alarms in the main control room and the security central alarm station. The fire is extinguished manually using hose streams or portable extinguishers.

Combustible materials in this fire area are listed in Table 9A-3, and primarily consist of cable insulation for cables associated with the motor-operated valves, fans and other components in this fire area. Small quantities of lubricating oil are contained within the housings of some of these components. There are small concentrations of cable overhead in each room. This is a light hazard fire area and the rate of fire growth is expected to be slow. Three-hour fire barriers provide adequate separation from adjacent fire areas and the fire is contained within the fire area.

The recirculation type ventilation system does not contribute to the spread of the fire or smoke to other fire areas.

Fire Protection System Integrity

An evaluation of the consequences of inadvertent operation of an automatic suppression system is not required because there are no such systems in this fire area. The consequences of a break in a fire protection line in this fire area were considered in the evaluation of internal flooding in Section 3.4.

Safe Shutdown Evaluation

Table 9A-2 lists the safe shutdown components located in this fire area.

A fire in this fire area is assumed to disable the safe shutdown components in the fire area. The steam generator, main steam line, feedwater line, and blowdown line piping located inside containment outside of this fire area is sufficient to perform the applicable functions to maintain containment integrity.

Neither a fire nor fire suppression activities in this fire area affect the safe shutdown capability of components located in adjacent fire areas.

No fire in this fire area can cause spurious actions which could cause a breach in the reactor coolant boundary or defeat safety-related decay heat removal capability or cause an increase in shutdown reactivity of the reactor.

9A.3.1.2.7.4 Fire Area 1250 AF 01

This fire area is comprised of the following room(s):

Room No.	
12501	Nuclear island nonradioactive ventilation system main control room/division A and C equipment room

There are no systems in this fire area which normally contain radioactive material.

Fire Detection and Suppression Features

- Fire detectors
- Hose station(s)
- Portable fire extinguishers

Smoke Control Features

This fire area houses and is served by the division A & C Class 1E electrical room HVAC subsystem of the nuclear island nonradioactive ventilation system (VBS). Combination fire-smoke dampers close automatically in response to a smoke detector signal or high temperature to control the spread of fire and smoke. Closure of these fire dampers interrupts the operation of the VBS division A & C Class 1E electrical room and the main control room/control support area HVAC subsystems that are located in this fire area. Operation of the independent division B & D Class 1E electrical room HVAC subsystem continues unaffected. Smoke is removed from the fire area by using portable exhaust fans and flexible ductwork. Smoke from a fire in this fire area does not affect safe shutdown components in fire areas that are served by other ventilation systems or subsystems. The division B reactor coolant pump trip switchgear and the division B and D electrical cable in fire areas 1200 AF 03 and 1220 AF 01 are unaffected by the small quantity of smoke that may leak into these fire areas. Safe shutdown components in these fire areas, identified in Table 9A-4, are sufficient to achieve and maintain safe shutdown.

Fire Protection Adequacy Evaluation

A fire in this fire area is detected by a fire detector, which produces an audible alarm locally and both visual and audible alarms in the main control room and the security central alarm station. A fire in the fire area is extinguished manually using hose streams or portable extinguishers.

This fire area contains two charcoal adsorbers, located in the nuclear island nonradioactive ventilation system supplemental air filtration units. The normal temperature of the air flowing through the charcoal adsorbers is well below 200°F, while the minimum charcoal ignition temperature is greater than 600°F. Two independent temperature sensors interface with the fire detection system, providing charcoal temperature indication and high and high-high temperature alarms. The filtration unit fan trips at the high temperature alarm setpoint. The setpoints of both alarms are well below the charcoal ignition temperature, allowing the operator time to investigate and take corrective action. In the unlikely event of a fire in the adsorber, the filtration unit can be manually isolated. The adsorber bed deluge piping will be connected to a nearby hose station to cool the charcoal and extinguish the fire.

Combustible materials in this fire area are listed in Table 9A-3. Aside from the charcoal contained within the air filtration units, these materials primarily consist of electrical cable insulation for cables supplying fans and pumps within this fire area. There are cable concentrations near the ceiling and adjacent to the west wall. This is a light hazard fire area and the rate of fire growth is expected to be slow. Generally, three-hour fire barriers provide adequate separation from adjacent fire areas and the fire is contained within the fire area. Fire barrier separation is not provided between the main control room and this fire area from fires in the main control room. There are no safe shutdown components in this room. There is fire barrier separation between the main control room and this fire area for fires originating in this area.

The ventilation system does not contribute to the spread of the fire or smoke as described in the Smoke Control Features section above.

Fire Protection System Integrity

An evaluation of the consequences of inadvertent operation of an automatic suppression system is not required because there are no such systems in this fire area. The consequences of a break in a fire protection line in this fire area were considered in the evaluation of internal flooding in Section 3.4.

Safe Shutdown Evaluation

This fire area contains no components required for safe shutdown after a fire. No safe shutdown evaluation is required.

Neither a fire nor fire suppression activities in this fire area affect the safe shutdown capability of components located in adjacent fire areas.

No fire in this fire area can cause spurious actions which could cause a breach in the reactor coolant boundary or defeat safety-related decay heat removal capability or cause an increase in shutdown reactivity of the reactor.

9A.3.1.2.8 Miscellaneous Areas

9A.3.1.2.8.1 Fire Area 1230 AF 01

This fire area is comprised of the following room(s):

Room No.	
12300	Corridor

There are no systems in this fire area which normally contain radioactive material.

Fire Detection and Suppression Features

- Fire detectors
- Hose station(s)
- Portable fire extinguishers

Smoke Control Features

This fire area is served by one of the three air distribution headers of the division B & D Class 1E electrical room HVAC subsystem of the nuclear island nonradioactive ventilation system (VBS). Combination fire-smoke dampers close automatically in response to a smoke detector signal or high temperature to control the spread of fire and smoke. Closure of these dampers interrupts ventilation of adjacent fire areas 1201 AF 02 (division B electrical rooms), 1202 AF 05 (stair S05), and 1232 AF 01 (remote shutdown room) because their ducts are routed through this corridor. The ventilation system continues to provide ventilation to other unaffected fire areas, and may be manually realigned to the once-through ventilation mode to minimize the potential for migration of smoke. If the exhaust fire-smoke damper for this fire area is operable, the damper may be reopened to further reduce the migration of smoke. After the fire, smoke is removed from the fire area by reopening the fire dampers and operating the ventilation system in the once-through ventilation mode. Smoke from a fire in this fire area does not affect safe shutdown components in fire areas that are served by other ventilation systems, subsystems, or air distribution headers. Safe shutdown components in these fire areas, identified in Table 9A-4, are sufficient to achieve and maintain safe shutdown.

Fire Protection Adequacy Evaluation

A fire in this fire area is detected by a fire detector which produces an audible alarm locally and both visual and audible alarms in the main control room and the security central alarm station. The fire is extinguished manually using hose streams or portable extinguishers.

Combustible materials in this fire area are listed in Table 9A-3, and primarily consist of small quantities of cable insulation for cables routed overhead through the fire area. This is a light hazard fire area and the rate of fire growth is expected to be slow. Three-hour fire barriers provide adequate separation from adjacent fire areas and the fire is contained within the fire area.

The ventilation system does not contribute to the spread of the fire or smoke as described in the Smoke Control Features section above.

Fire Protection System Integrity

An evaluation of the consequences of inadvertent operation of an automatic suppression system is not required because there are no such systems in this fire area. The consequences of a break in a fire protection line in this fire area were considered in the evaluation of internal flooding in Section 3.4.

Safe Shutdown Evaluation

Table 9A-2 lists the safe shutdown components located in this fire area. The Class 1E divisions A and C cables for data communication between divisions are in this fire area.

In the event of a fire in the division A and C corridor, it is assumed that data output from divisions A and C to the division B and D protection logic is lost. This loss of data does not disable the safe shutdown functions of the four Class 1E divisions.

The division A and C instrument cables serving safe shutdown components are assumed to be disabled. The division B and D instrument cables routed outside of this fire area that serve redundant safe shutdown components are sufficient to perform the applicable functions to achieve and maintain safe shutdown.

Neither a fire nor fire suppression activities in this fire area affect the safe shutdown capability of components located in adjacent fire areas.

No fire in this fire area can cause spurious actions which could cause a breach in the reactor coolant boundary or defeat safety-related decay heat removal capability or cause an increase in shutdown reactivity of the reactor.

9A.3.1.2.8.2 Fire Area 1201 AF 01

This fire area is comprised of the following room(s):

Room No.	
S02	Stairwell

The stairwell serving the northwest portion of the auxiliary building is enclosed by fire barrier walls having a minimum rating of 2 hours. The structural walls are concrete, and the nonstructural walls are made of a concrete/steel composite material. There are no safe shutdown components and no radioactive systems in this fire area. The quantity of combustible materials in the stairwell is negligible and no fire is postulated in this fire area. NFPA Class I hose connections are provided in the stairwell for use in fighting fires in other fire areas.

This fire area is served by the division B & D Class 1E electrical room HVAC subsystem of the nuclear island nonradioactive ventilation system (VBS). Air at a positive pressure is supplied near the top of the stairwell and exfiltrates through an opening near the bottom of the stairwell. During a fire, the pressure difference across the doors in the stairwell is maintained in accordance with the guidance of NFPA 92A (Reference 4), using a dedicated stairwell pressurization fan.

9A.3.1.2.8.3 Fire Area 1202 AF 01

This fire area is comprised of the following room(s):

Room No.	
S01	Stairwell

The stairwell serving the northeast portion of the auxiliary building is enclosed by fire barrier walls having a minimum rating of 2 hours. The structural walls are concrete, and the nonstructural walls are made of a concrete/steel composite material. There are no safety-related components and no radioactive systems in this fire area. The quantity of combustible materials in the stairwell is

negligible and no fire is postulated in this fire area. NFPA Class I hose connections are provided in the stairwell for use in fighting fires in other fire areas.

This fire area is served by the division A & C Class 1E electrical room HVAC subsystem of the nuclear island nonradioactive ventilation system (VBS). Air at a positive pressure is supplied near the top of the stairwell and exfiltrates through an opening near the bottom of the stairwell. During a fire, the pressure difference across the doors in the stairwell is maintained in accordance with the guidance of NFPA 92A (Reference 4), using a dedicated stairwell pressurization fan.

9A.3.1.2.8.4 Fire Area 1202 AF 05

This fire area is comprised of the following room(s):

Room No.	
S05	Stairwell

The stairwell provides an emergency egress path from the main control room to the emergency shutdown workstation. It is enclosed by 3-hour fire barriers. These barriers are made of concrete. The quantity of combustible materials in the stairwell is negligible and no fire is postulated in this fire area.

This fire area is served by the division B & D Class 1E electrical room HVAC subsystem of the nuclear island nonradioactive ventilation system (VBS). Air at a positive pressure is supplied to the stairwell and exfiltrates through an opening to neighboring fire area 1232 AF 01, the remote shutdown room. For a fire in the remote shutdown room fire area, combination fire-smoke dampers close automatically in response to a smoke detector signal or high temperature to prevent the spread of fire and smoke into the stairwell. For fires not affecting the ventilation system, the system continues to provide ventilation to the stairwell, and may be manually realigned to the once-through ventilation mode to further minimize the potential for migration of smoke and hot gases.

Safe Shutdown Evaluation

Table 9A-2 lists the safe shutdown components located in this fire area. The stairwell contains circuits for the transfer switch set which is used to transfer control from the control room to the remote shutdown workstation in the event of a control room evacuation. Electrical separation to and inside the stairwell is maintained per industry standards. In the unlikely event that the fire damages the transfer switch set, causing transfer of control from the main control room to the remote shutdown workstation, the operator restores control to the main control room by using controls located in the instrumentation and control rooms. Safe shutdown is achieved using the safe shutdown components listed in Table 9A-2. Neither a fire nor fire suppression activities in this fire area affect the safe shutdown capability of components located in adjacent fire areas.

9A.3.1.2.8.5 Fire Area 1202 AF 02

This fire area contains an elevator and elevator shaft serving five levels on the north side of the auxiliary building, and the associated elevator mechanical room, 12601. There are no systems in this fire area which normally contain radioactive material.

Fire Detection and Suppression Features

- Fire detector
- Hose station(s)
- Portable fire extinguishers

Smoke Control Features

No ventilation system serves this fire area. The nuclear island nonradioactive ventilation system provides ventilation to neighboring fire areas, and may be manually realigned to the once-through ventilation mode to minimize the potential for migration of smoke and hot gases. After the fire, smoke is removed from the fire area by using portable exhaust fans and flexible ductwork.

Fire Protection Adequacy Evaluation

A fire in this fire area is detected by a fire detector which produces an audible alarm locally and both visual and audible alarms in the main control room and the security central alarm station. The fire is extinguished manually using hose streams or portable extinguishers.

Combustible materials in this fire area are listed in Table 9A-3, and primarily consist of cable insulation and lubricant associated with the elevator hoisting machinery. There are small concentrations of these materials in the elevator mechanical room at the top of the elevator shaft. This is a light hazard fire area and the rate of fire growth is expected to be slow. Two-hour fire barriers provide adequate separation from adjacent fire areas and the fire is contained within the fire area.

Safe Shutdown Evaluation

This fire area contains no components required for safe shutdown after a fire. No safe shutdown evaluation is required.

No fire in this fire area can cause spurious actions which could cause a breach in the reactor coolant boundary or defeat safety-related decay heat removal capability or cause an increase in shutdown reactivity of the reactor.

9A.3.1.2.8.6 Fire Area 1200 AF 03

This fire area is subdivided into the following fire zones:

Fire Zone	Room No.	
● 1230 AF 12311	12311	Elevation 100′-0″ corridor
● 1242 AF 12411	12411	Elevation 117′-6″ corridor

There are no systems in this fire area which normally contain radioactive material.

Fire Detection and Suppression Features

- Fire detectors
- Hose station(s)
- Portable fire extinguishers

Smoke Control Features

This fire area is served by one of the three air distribution headers of the division A & C Class 1E electrical room HVAC subsystem of the nuclear island nonradioactive ventilation system (VBS). Combination fire-smoke dampers close automatically in response to a smoke detector signal or high temperature to control the spread of fire and smoke. The ventilation system continues to provide ventilation to the unaffected fire areas. Fire areas 1220 AF 01 and 1210 AF 01 are served by the same air distribution header as this fire area, but they continue to receive ventilation because they have separate supply ducts. The ventilation system may be manually realigned to the once-through ventilation mode to minimize the potential for migration of smoke and hot gases. If the exhaust fire-smoke damper for this fire area is operable, the damper may be reopened to further reduce the migration of smoke. After the fire, smoke is removed from the fire area by reopening the fire dampers

and operating the ventilation system in the once-through ventilation mode. Smoke from a fire in this fire area does not affect safe shutdown components in fire areas that are served by other ventilation systems, subsystems, or air distribution headers. Safe shutdown components in these fire areas, identified in Table 9A-4, are sufficient to achieve and maintain safe shutdown.

Fire Protection Adequacy Evaluation

A fire in this fire area is detected by a fire detector which produces an audible alarm locally and both visual and audible alarms in the main control room and the security central alarm station. The fire is extinguished manually using hose streams or portable extinguishers.

Combustible materials in this fire area are listed in Table 9A-3, and primarily consist of small quantities of cable insulation for cables routed overhead in each fire zone. This is a light hazard fire area and the rate of fire growth is expected to be slow. Three-hour fire barriers provide adequate separation from adjacent fire areas and the fire is contained within the fire area.

The ventilation system does not contribute to the spread of the fire or smoke as described in the Smoke Control Features section above.

Fire Protection System Integrity

An evaluation of the consequences of inadvertent operation of an automatic suppression system is not required because there are no such systems in this fire area. The consequences of a break in a fire protection line in this fire area were considered in the evaluation of internal flooding in Section 3.4.

Safe Shutdown Evaluation

Table 9A-2 lists the safe shutdown components located in this fire area. Class 1E divisions B and D cables are routed through this corridor.

The division B and D control cables to the reactor trip switchgear are assumed to be disabled. Inputs from divisions A and C, which are routed in a separate fire area, are sufficient to trip the reactor when needed. The reactor can also be tripped with the diverse actuation system described in Section 7.7.

The division B and D instrument and control cables serving other safe shutdown components are assumed to be disabled. The instrument and control cables routed outside of this fire area that serve redundant safe shutdown components are sufficient to perform the applicable functions to achieve and maintain safe shutdown.

Neither a fire nor fire suppression activities in this fire area affect the safe shutdown capability of components located in adjacent fire areas.

No fire in this fire area can cause spurious actions which could cause a breach in the reactor coolant boundary or defeat safety-related decay heat removal capability or cause an increase in shutdown reactivity of the reactor.

9A.3.1.3 Auxiliary Building - Radiologically Controlled Areas

The safe shutdown components located in the radiologically controlled areas are primarily containment isolation valves, which are located near the containment vessel in the lower annulus. Containment isolation valves are also located in the pipe chases southeast of containment. These containment isolation valves are required to either close or remain closed during a safe shutdown operation.

9A.3.1.3.1 Principal Areas

9A.3.1.3.1.1 Fire Area 1200 AF 01

This fire area includes most of the radiologically controlled areas of the auxiliary building outside the fuel handling area. This fire area contains one of the two normal residual heat removal pumps and the heat exchangers, the liquid radwaste system, spent fuel pool cooling system, radiologically controlled area ventilation system, chemical and volume control system makeup pump, containment isolation valve area, and lower annulus areas. The fire area is subdivided into the following fire zones:

Fire Zone	Room No.	
● 1200 AF 12241	12241	Lower annulus east
● 1200 AF 12241	12242	Lower annulus southeast
● 1200 AF 12461	12461	Corridor
● 1205 AF 12362	12362	Normal residual heat removal heat exchanger room
● 1205 AF 12365	12365	Waste monitor tank room B
● 1210 AF 12151	12151	Demineralizer/filter room
● 1210 AF 12151	12155	Gaseous radwaste system equipment room
● 1210 AF 12151	12156	Liquid radwaste system equipment room
● 1210 AF 12151	12158	Degasifier discharge pump room
● 1210 AF 12151	12258	Degasifier column
● 1210 AF 12171	12171	Effluent holdup tank room A
● 1214 AF 12152	12152	Primary sample room
● 1214 AF 12154	12154	Auxiliary building sump room
● 1214 AF 12154	12254	Spent fuel pool cooling system penetration room
● 1214 AF 12354	12354	Mid-annulus access room
● 1215 AF 12161	12161	Corridor
● 1215 AF 12162	12162	Normal residual heat removal pump room A
● 1216 AF 12166	12166	Waste holdup tank room A
● 1216 AF 12167	12167	Waste holdup tank room B
● 1216 AF 12169	12168	Corridor
● 1216 AF 12169	12169	Corridor
● 1216 AF 12169	12268	Liquid radwaste system pump room
● 1216 AF 12264	12264	Chemical waste tank room
● 1216 AF 12264	12265	Waste monitor tank room C
● 1216 AF 12172	12172	Effluent holdup tank room B
● 1220 AF 12251	12251	Demineralizer/filter access area
● 1220 AF 12251	12255	Chemical and volume control system makeup pump room
● 1220 AF 12259	12259	Pipe chase
● 1220 AF 12256	12256	Containment isolation valve area

- 1220 AF 12269 12269 Pipe chase
- 1220 AF 12256 12253 Pipe chase
- 1220 AF 12272 12272 Spent fuel pool cooling system pump room A
- 1220 AF 12272 12273 Spent fuel pool cooling system heat exchanger room A
- 1220 AF 12272 12274 Spent fuel pool cooling system pump room B
- 1220 AF 12272 12275 Spent fuel pool cooling system heat exchanger room B
- 1224 AF 12252 12252 Radiation chemistry laboratory
- 1225 AF 12261 12261 Corridor
- 1225 AF 12261 12271 Liquid radwaste system pump room
- 1225 AF 12262 12262 Piping/valve room
- 1234 AF 12351 12351 Maintenance floor staging area
- 1234 AF 12352 12352 Personnel hatch
- 1235 AF 12363 12363 Waste monitor tank room A
- 1244 AF 12451 12451 Security room
- 1244 AF 12452 12452 Containment air filtration system penetration room
- 1244 AF 12454 12454 Containment air filtration system/spent fuel pool cooling
- 1235 AF 12361 12361 Corridor
- 1250 AF 12561 12561 Component cooling water system valve room
- 1254 AF 12553 12553 Personnel access area
- 1254 AF 12554 12554 Security room
- 1264 AF 12651 12651 Radiologically controlled area ventilation system equipment room

The equipment and piping in this fire area normally contain radioactive material.

Fire Detection and Suppression Features

- Fire detectors
- Wet pipe sprinklers (Fire Zone 1220 AF 12251, room 12255)
- Hose station(s)
- Portable fire extinguishers

Smoke Control Features

The radiologically controlled area ventilation system (VAS) serves this fire area on a once-through basis. Some of the ventilation system equipment is also located within this fire area. For a fire that does not disable the ventilation system, the system continues to ventilate the fire area unless the operator decides to shut down the system, or until heat from the fire is sufficient to close the fire dampers. Fire dampers close automatically on high temperature to control the spread of fire and smoke. If the radiologically controlled area ventilation system is not affected by the fire, smoke is removed from the fire area by reopening the fire dampers after a fire and exhausting to the atmosphere. If the radiologically controlled area ventilation system is unavailable, smoke is removed from the fire area using portable exhaust fans and flexible ductwork.

Fire Protection Adequacy Evaluation

A fire in this fire area is detected by fire detectors which produces an audible alarm locally and both visual and audible alarms in the main control room and the security central alarm station. The fire is

extinguished by the wet pipe sprinkler system or manually using hose streams or portable extinguishers.

Combustible materials in this large fire area are listed in Table 9A-3, and consist primarily of cable insulation for cables associated with the mechanical equipment and instrumentation in this fire area. There are small concentrations of lubricants in fire zones containing pumps and the radiologically controlled area ventilation system equipment. There are small concentrations of paper and plastic in some fire zones. Concentrations of paper or plastic anti-contamination clothing may also be present in some fire zones. There are small concentrations of cable in the overhead cable trays in many fire zones. This is a light hazard fire area and the rate of fire growth is expected to be slow. Three-hour fire barriers provide adequate separation from adjacent fire areas and the fire is contained within the fire area. An automatic suppression system is provided to increase the availability of non-safety related systems required to achieve cold shutdown.

The ventilation system does not contribute to the spread of the fire or smoke as described in the Smoke Control Features section above.

Fire Protection System Integrity

The consequences of inadvertent operation of an automatic suppression system in this fire area or of fire suppression systems that drains to this fire area from the radwaste building, or of a break in a fire protection line in this fire area, are considered in the evaluation of internal flooding in Section 3.4.

Safe Shutdown Evaluation

Table 9A-2 lists the safe shutdown components located in this fire area. The electrical equipment in this area is non-Class 1E; however, some division A and C cables are routed through this area. In the event of a fire, the division A and C cabling in this area can be damaged. This damage can result in loss of control of equipment serviced by these cables. Other components in divisions A and C are not affected.

The normal residual heat removal, primary sampling system, spent fuel pool cooling system and containment air filtration system containment isolation valves are conservatively assumed to be disabled as a result of a fire in this fire area. The redundant normal residual heat removal, primary sampling system, spent fuel pool cooling system and containment air filtration system containment isolation valves located inside containment are outside of this fire area and are sufficient to perform the applicable functions to maintain containment integrity and achieve and maintain safe shutdown. Cable trays supplying these valves and other components are not required for safe shutdown.

Spurious DAS actuation of squib valves is prevented by the use of a squib valve controller circuit, which requires multiple hot shorts for actuation, physical separation of potential hot short locations, and provisions for operator action to remove power from the fire area. No postulated fire can spread to the hot short locations before the operator can remove power from the fire area.

The redundant passive containment cooling system safe shutdown components located in fire zone 1200 AF 12341 are sufficient to perform applicable functions to achieve and maintain safe shutdown.

Following detection of a fire in the non-Class 1E equipment/penetration room, the operators can close the automatic depressurization system stage 4 block valves, then remove DAS actuation power. This operator action will prevent spurious actuation of squib valves resulting from multiple hot shorts in the non-Class 1E equipment/penetration room.

Neither a fire nor fire suppression activities in this fire area affect the safe shutdown capability of components located in adjacent fire areas.

No fire in this fire area can cause spurious actions which could cause a breach in the reactor coolant boundary or defeat safety-related decay heat removal capability or cause an increase in shutdown reactivity of the reactor.

9A.3.1.3.1.2 Fire Area 1200 AF 02

This fire area is subdivided into the following fire zones:

Fire Zone	Room No.	
● 1200 AF 12562	12462	Cask washdown pit
● 1200 AF 12562	12463	Cask loading pit
● 1200 AF 12562	12472	New fuel storage pit
● 1200 AF 12562	12563	Spent fuel storage pool
● 1200 AF 12562	12564	Fuel transfer canal
● 1230 AF 12371	12371	Rail car bay/filter storage area
● 1230 AF 12371	12374	Waste disposal container area
● 1236 AF 12372	12372	Resin transfer pump/valve room
● 1236 AF 12373	12373	Spent resin tank room
● 1246 AF 12471	12471	Solid waste system valve/piping area

The spent fuel storage pool, spent fuel handling systems and components, and the solid radwaste rooms normally contain radioactive material.

Fire Detection and Suppression Features

- Fire detectors
- Wet pipe sprinklers (Fire Zone 1230 AF 12371, room 12371 rail car bay only)
- Hose station(s)
- Portable fire extinguishers

Smoke Control Features

The radiologically controlled area ventilation system serves this fire area on a once-through basis. In the event of a fire the system continues to ventilate the fire area unless the operator decides to shut down the system, or until heat from the fire is sufficient to close the fire dampers. Fire dampers close automatically on high temperature to control the spread of fire and smoke. After the fire, smoke is removed from the fire area by reopening the fire dampers. The radiologically controlled area ventilation system exhausts the smoke and hot gases to the atmosphere.

Fire Protection Adequacy Evaluation

A fire in this fire area is detected by a fire detector which produces an audible alarm locally and both visual and audible alarms in the main control room and the security central alarm station. The fire is extinguished by the wet pipe sprinkler system or manually using hose streams or portable extinguishers.

Combustible materials in this large fire area are listed in Table 9A-3, and consist primarily of cable insulation for the cables associated with the mechanical equipment and instrumentation in this fire area. There are small concentrations of lubricants associated with equipment such as the overhead cranes and the fuel handling machine. Diesel fuel may be present when there is a truck in the rail car bay. Concentrations of paper or plastic anti-contamination clothing may also be present. There are

small concentrations of cable in the overhead cable trays. This is generally a light hazard fire area and the rate of fire growth is expected to be slow. Concentrations of transient combustibles in the rail car bay may produce a rapidly growing fire, so an automatic suppression system is provided in that area. Three-hour fire barriers provide adequate separation from adjacent fire areas. The roof and building exterior walls are unrated because there are no significant exposure fire hazards in nearby outdoor areas. Automatic or manual fire suppression activities prevent the fire from propagating beyond the fire area.

The ventilation system does not contribute to the spread of the fire or smoke as described in the Smoke Control Features section above.

Fire Protection System Integrity

An evaluation of the consequences of inadvertent operation of an automatic suppression system or of a break in a fire protection line in this fire area are considered in the evaluation of internal flooding in Section 3.4.

Safe Shutdown Evaluation

There are no safe shutdown components in this area, so a fire in this area has no impact on safe shutdown. The electrical equipment in this area is non-Class 1E; however, some division A and C cables are routed through this area. In the event of a fire, the division A and C cabling in this area can be damaged. This damage can result in loss of control of equipment serviced by these cables. Other components in divisions A and C are not affected. Safe shutdown is possible from equipment in other fire areas.

Neither a fire nor fire suppression activities in this fire area affect the safe shutdown capability of components located in adjacent fire areas.

No fire in this fire area can cause spurious actions which could cause a breach in the reactor coolant boundary or defeat safety-related decay heat removal capability or cause an increase in shutdown reactivity of the reactor.

9A.3.1.3.1.3 Fire Area 1204 AF 01

This fire area is comprised of the following room:

Room No.	
12163	Normal residual heat removal pump room B

Some of the piping in this fire area normally contains radioactive material.

Fire Detection and Suppression Features

- Fire detectors
- Hose station(s)

Smoke Control Features

The radiologically controlled area ventilation system serves this fire area on a once-through basis. The system continues to ventilate the fire area unless the operator decides to shut down the system, or until heat from the fire is sufficient to close the fire dampers. Fire dampers close automatically on high temperature to control the spread of fire and smoke. Smoke is removed from the fire area by reopening the fire damper(s) after a fire and exhausting to the atmosphere.

Fire Protection Adequacy Evaluation

A fire in this fire area is detected by a fire detector which produces an audible alarm locally and both visual and audible alarms in the main control room and the security central alarm station. The fire is extinguished manually using hose streams.

Combustible materials in this fire area are listed in Table 9A-3, and consist primarily of cable insulation for the cables associated with the mechanical equipment and instrumentation in this fire area. There are small concentrations of cable in overhead cable trays. This is a light hazard fire area and the rate of fire growth is expected to be slow. Three-hour fire barriers provide adequate separation from adjacent fire areas and the fire is contained within the fire area.

The ventilation system does not contribute to the spread of the fire or smoke as described in the Smoke Control Features section above.

Fire Protection System Integrity

An evaluation of the consequences of inadvertent operation of an automatic suppression system is not required because there are no such systems in this fire area. The consequences of a break in a fire protection line in this fire area were considered in the evaluation of internal flooding in Section 3.4.

Safe Shutdown Evaluation

Table 9A-2 lists the safe shutdown components located in this fire area.

Neither a fire nor fire suppression activities in this fire area affect the safe shutdown capability of components located in adjacent fire areas.

No fire in this fire area can cause spurious actions which could cause a breach in the reactor coolant boundary or defeat safety-related decay heat removal capability or cause an increase in shutdown reactivity of the reactor.

9A.3.1.3.1.4 Fire Area 1220 AF 02

This fire area is comprised of the following room(s):

Room No.	
12244	Lower annulus valve area

Some of the piping in this fire area normally contains radioactive material.

Fire Detection and Suppression Features

- Fire detector
- Hose station(s)
- Portable fire extinguishers

Smoke Control Features

The radiologically controlled area ventilation system serves this fire area on a once-through basis. In the event of a fire the system continues to ventilate the fire area unless the operator decides to shut down the system, or until heat from the fire is sufficient to close the fire dampers. Fire damper(s) close automatically on high temperature to control the spread of fire and smoke. After the fire, smoke is removed from the fire area by reopening the fire dampers. The radiologically controlled area ventilation system exhausts the smoke and hot gases to the atmosphere.

Fire Protection Adequacy Evaluation

A fire in this fire area is detected by a fire detector which produces an audible alarm locally and both visual and audible alarms in the main control room and the security central alarm station. The fire is extinguished manually using hose streams or portable extinguishers.

Combustible materials in this fire area are listed in Table 9A-3, and consist primarily of cable insulation for cables associated with the few containment isolation valves in this fire area. There are no significant concentrations of combustible materials. This is a light hazard fire area and the rate of fire growth is expected to be slow. Three-hour fire barriers provide adequate separation from adjacent fire areas and the fire is contained within the fire area.

The ventilation system does not contribute to the spread of the fire or smoke as described in the Smoke Control Features section above.

Fire Protection System Integrity

An evaluation of the consequences of inadvertent operation of an automatic suppression system is not required because there are no such systems in this fire area. An evaluation of the consequences of a break in a fire protection line is not required because no such lines pass through or terminate in this fire area.

Safe Shutdown Evaluation

Table 9A-2 lists the safe shutdown components located in this fire area. The chemical and volume control system and liquid radwaste system containment isolation valves are conservatively assumed to be disabled as a result of a fire in this fire area. The redundant chemical and volume control system and liquid radwaste system containment isolation valves located inside containment are outside of this fire area and are sufficient to perform the applicable functions to achieve and maintain safe shutdown.

Neither a fire nor fire suppression activities in this fire area affect the safe shutdown capability of components located in adjacent fire areas.

No fire in this fire area can cause spurious actions which could cause a breach in the reactor coolant boundary or defeat safety-related decay heat removal capability or cause an increase in shutdown reactivity of the reactor.

9A.3.1.3.2 Miscellaneous Areas

9A.3.1.3.2.1 Fire Area 1204 AF 02

This fire area is comprised of the following room(s):

Room No.	
S03	Stairwell

This fire area is the stairwell serving the shield building. The portion of the stairwell below the elevation of the auxiliary building roof is enclosed by fire barrier walls partially constructed of concrete and partially constructed of a concrete/steel composite material, having a minimum rating of 3 hours. Above the auxiliary building roof, the stairwell enclosure is not fire-rated. There are no radioactive systems in this fire area. The quantity of combustible materials in the stairwell is negligible and no fire is postulated in this fire area.

No ventilation system directly serves this fire area.

9A.3.1.3.2.2 Fire Area 1204 AF 03

This fire area contains the elevator and elevator shaft serving the south side of the shield building. There are no systems in this fire area which normally contain radioactive material.

Fire Detection and Suppression Features

- Fire detectors
- Hose station(s)
- Portable fire extinguishers

Smoke Control Features

No ventilation system directly serves this fire area. After the fire, smoke is removed from the fire area by using portable exhaust fans and flexible ductwork.

Fire Protection Adequacy Evaluation

A fire in this fire area is detected by a fire detector which produces an audible alarm locally and both visual and audible alarms in the main control room and the security central alarm station. The fire is extinguished manually using hose streams or portable extinguishers.

Combustible materials in this fire area are listed in Table 9A-3, and primarily consist of cable insulation and lubricant associated with the elevator hoisting machinery which is attached to the top of the elevator car. This is a light hazard fire area and the rate of fire growth is expected to be slow. Minimum two-hour fire barriers provide adequate separation from adjacent fire areas below the elevation of the auxiliary building roof. Manual fire suppression activities prevent the fire from propagating beyond the nonrated building exterior walls above the roof.

Safe Shutdown Evaluation

There are no safe shutdown components in this fire area. No safe shutdown evaluation is required.

9A.3.1.3.2.3 Fire Area 1205 AF 01

This fire area is comprised of the following room(s):

Room No.	
S04	Stairwell

This stairwell, serving the southeast portion of the auxiliary building, is enclosed by fire barrier walls having a minimum rating of 2 hours. The structural walls are concrete, and the nonstructural walls are made of a concrete/steel composite material. There are no safety-related components and no radioactive systems in this fire area. The quantity of combustible materials in the stairwell is negligible and no fire is postulated in this fire area. NFPA Class I hose connections are provided in the stairwell for use in fighting fires in other fire areas.

The radiologically controlled area ventilation system (VAS) serves this fire area on a once-through basis. Air at a positive pressure is supplied to the stairwell and exfiltrates through small openings such as under the fire doors. For a fire in the fire area outside the stairwell in which the supply penetration is located, a fire damper closes automatically on high temperature to prevent the spread of fire and smoke into the stairwell. For fires not affecting the ventilation system, the system continues to provide ventilation to the stairwell, minimizing the potential for migration of smoke and hot gases.

9A.3.1.3.2.4 Fire Area 1205 AF 02

This fire area contains the elevator and elevator shaft serving the radiologically controlled area of the auxiliary building, and the associated elevator mechanical room, 12661. There are no systems in this fire area which normally contain radioactive material.

Fire Detection and Suppression Features

- Fire detectors
- Hose station(s)
- Portable fire extinguishers

Smoke Control Features

The radiologically controlled area ventilation system serves the elevator mechanical room portion of this fire on a once-through basis. There is no direct ventilation of the elevator or the elevator shaft. In the event of a fire in the mechanical room the system continues to ventilate the fire area unless the operator decides to shut down the system, or until heat from the fire is sufficient to close the fire dampers. The fire dampers close automatically on high temperature to control the spread of fire, smoke and hot gases. Smoke is removed from the elevator mechanical room by reopening the fire dampers after a fire and operating the ventilation system to exhaust them to the atmosphere. For a fire in the elevator or elevator shaft, smoke is removed from the fire area by using portable exhaust fans and flexible ductwork.

Fire Protection Adequacy Evaluation

A fire in this fire area is detected by a fire detector which produces an audible alarm locally and both visual and audible alarms in the main control room and the security central alarm station. The fire is extinguished manually using hose streams or portable extinguishers.

Combustible materials in this fire area are listed in Table 9A-3, and primarily consist of cable insulation and lubricant associated with the elevator hoisting machinery. There are small concentrations of these materials in the elevator mechanical room at the top of the elevator shaft. This is a light hazard fire area and the rate of fire growth is expected to be slow. Minimum two-hour fire barriers provide adequate separation from adjacent fire areas and the fire is contained within the fire area.

The ventilation system does not contribute to the spread of the fire or smoke as described in the Smoke Control Features section above.

Safe Shutdown Evaluation

There are no safe shutdown components in this fire area. No safe shutdown evaluation is required.

9A.3.2 Turbine Building

Figure 9A-2 identifies fire areas and fire zones within the turbine building and illustrates the fire resistance of the fire area boundaries.

A fire in the turbine building fire areas does not affect safe shutdown capability. Fire areas located in the turbine building are separated from the safety-related areas of the nuclear island by a 3-hour fire barrier wall. The closing of fire dampers in the ventilation systems serving turbine building fire areas does not affect safe shutdown systems because safe shutdown systems are served by independent ventilation systems.

Neither a fire nor fire suppression activities in turbine building fire areas affect the safe shutdown capability of components located in other fire areas.

Floor drains are sized to handle water flow from fixed automatic fire suppression systems without significant accumulation of water in the fire area. Flooding of components required for safe shutdown is not a concern because there are no safe shutdown components in the turbine building.

No fire in the turbine building can cause spurious actions which could cause a breach in the reactor coolant boundary or defeat decay heat removal capability or cause an increase in shutdown reactivity of the reactor.

9A.3.2.1 Fire Area 2000 AF 01

This fire area contains the main condenser, lubrication equipment auxiliary boiler, turbine-generator and auxiliaries, switchgear rooms, electrical equipment room, feedwater pumps, chemical feed equipment, chiller area, plant air compressors, digital-electrohydraulic skid, main steam piping, office area, and a sampling laboratory. The fire area is subdivided into the following fire zones:

Fire Zone	Room No.	
● 2030 AF 20300	20300	Elevation 100′-0″ (base slab) general floor area
● 2030 AF 20300	20305	Condensate polishing area reserve space
● 2030 AF 20300	20309	Circulating water pipe trench
● 2031 AF 21380	21380	CCS/BDS equipment room
● 2038 AF 20300	----	Main feedwater pump area
● 2039 AF 20301	20301	Chemical storage area
● 2040 AF 20400	20400	Elevation 117′-6″ general floor area
● 2040 AF 20400	20409	Condensate polishing area
● 2041 AF 21480	21480	VTS HVAC equipment room
● 2050 AF 20500	20500	Elevation 135′-3″ general floor area
● 2050 AF 20502	----	Digital-electrohydraulic skid
● 2051 AF 20580	21580	Lower VFD equipment room
● 2051 AF 20581	21581	Upper VFD equipment room
● 2052 AF 20504	20510	HVAC equipment area
● 2053 AF 20506	20505	Office area at 149′ - 0″
● 2053 AF 20506	20506	Conference room
● 2053 AF 20507	20507	Women’s restroom
● 2053 AF 20508	20508	Men’s restroom
● 2057 AF 20503	20511	Generator seal oil unit
● 2060 AF 20600	20600	Elevation 161′-0″ general floor area
● 2060 AF 20600	20603	Women’s restroom
● 2060 AF 20600	20604	Men’s restroom
● 2063 AF 20601	20601	Tool room/storage area
● 2063 AF 20602	20602	Office area/engineering workstation at elevation 175′-1 1/2″
● 2070 AF 20700	20700	Heater bay

This fire area designation consists of the entire turbine building floor areas except those special areas contained within fire rated enclosures and discussed below as separate fire areas. In zones within this area where there is a potential for spills of oil or other combustibles, such as the digital-electrohydraulic skid, condensate polishing area, chemical storage area and the generator seal oil unit, spill control curbs are provided to limit the spread of fire should one occur. There are no systems in this fire area which normally contain radioactive material.

Fire Detection and Suppression Features

- Fire detectors (See Table 9A-3 for type of detector.)
- Automatic suppression for the oil spill areas around the turbine-generator, the generator seal oil unit, the main feedwater pump area, the digital-electrohydraulic skid, and the chemical storage area.

  Automatic suppression for the following equipment: the service water pumps, the start-up feedwater pumps and MCCs and control equipment at elevation 135′-3″ (in the area defined by column 13.1 to 14 and P.1 to O).

  Automatic suppression is provided over elevation 100′-0″ down the corridor between the condenser and the main feedwater pumps defined by column 13.1 to column 18, continuing down another corridor defined by column L.2 to column K.5 and for the equipment access area in fire zone 2030-AF-20300, room 20300.

  See Table 9A-3 for identification of the specific types of automatic suppression systems for this fire area.
- Hose station(s)
- Portable fire extinguishers

Smoke Control Features

The general area heating and ventilation subsystem of the turbine building ventilation system (VTS), as described in Subsection 9.4.9, uses roof mounted exhaust ventilators to pull in air through wall louvers. Dedicated roof mounted smoke and heat vents are also provided. The smoke and heat vents and, if available, the roof mounted exhaust ventilators, vent smoke to outside areas and prevent migration of smoke to adjacent fire areas. The dedicated smoke and heat vents provide additional assurance that excessive smoke and heat cannot buildup at the turbine building ceiling. The design of the smoke and heat vents is in conformance with the guidelines of NFPA 204M.

Fire Protection Adequacy Evaluation

A fire in this area is detected by a fire detector which produces an audible alarm locally with both visual and audible alarms in the main control room and security central alarm station. The fire is extinguished by operation of the automatic suppression system, if applicable, or manually using hose streams or portable extinguishers.

Combustible materials in this fire area are listed in Table 9A-3. This area contains fire zones with a low quantity of combustible materials and other zones which have moderate to high quantities of combustible materials. Zones containing a low quantity of low heat release combustibles are generally protected by manual suppression. Zones containing moderate to high quantities of high heat release combustibles, such as oil spill areas, are protected by automatic suppression.

The limited amount of combustible material or automatic fire suppression activities prevent fire from propagating to other fire zones in the area and prevent fire from propagating through the exterior

walls or roof of the turbine building to other fire areas. The south end of the turbine building is formed by the 3-hour fire barrier exterior walls of the annex and auxiliary building. There are no concentrations of combustibles in the turbine building adjacent to these walls. Therefore, a turbine building fire will not propagate through these exterior walls of the annex or auxiliary building.

The turbine building ventilation system (VTS) serves the turbine building only and therefore does not contribute to the spread of the fire or smoke to fire areas outside the turbine building. The turbine building ventilation system does not contribute to the spread of fire or smoke to other fire areas within the turbine building because fire dampers isolate the other fire areas.

9A.3.2.2 Fire Area 2000 AF 02

This fire area is comprised of the following room(s):

Room No.	
S02	Stairwell

This stairwell serves the southwest portion of the turbine building. The walls of this enclosure that are exposed to the turbine building interior are constructed with a concrete/steel composite material having a minimum fire rating of 2 hours. The walls of the enclosures that face the yard area would not be exposed to the turbine building interior. Therefore, these outside walls are constructed with an exterior siding common to the overall siding used for the turbine building. There are no safety-related components and no radioactive systems in this fire area. The quantity of combustible materials in the stairwell is negligible and no fire is postulated in this fire area. A fire protection hose riser is located in the stairwell with NFPA Class I hose connections at intermediate stair landings.

This stairwell is not served by a ventilation system.

9A.3.2.3 Fire Area 2009 AF 01

This fire area is comprised of the following room(s):

Room No.	
S01	Stairwell

This stairwell serves the northeast portion of the turbine building. The walls of this enclosure that are exposed to the turbine building interior are constructed with a concrete/steel composite material having a minimum fire rating of 2 hours. The walls of the enclosures that face the yard area would not be exposed to the turbine building interior. Therefore, these outside walls are constructed with an exterior siding common to the overall siding used for the turbine building. There are no safety-related components or systems in this fire area which contain radioactive material. The quantity of combustible materials in the stairwell is negligible and no fire is postulated in this fire area. A fire protection hose riser is located in the stairwell with NFPA Class I hose connections at intermediate stair landings.

This stairwell is not served by a ventilation system.

9A.3.2.4 Fire Area 2009 AF 02

This fire area is comprised of the following room(s):

Room No.	
20701	Elevator machine room

This elevator serving the turbine building from elevation 100′-0″ to elevation 161′-0″ and its machine room are enclosed by fire barrier walls having a minimum rating of 2 hours. These nonstructural walls are metal lined gypsum board. The elevator machine room is above the elevator tower at elevation 171′-0″. There are no radioactive systems in this fire area.

Fire Detection and Suppression Features

- Fire detectors
- Hose station(s)
- Portable fire extinguishers

Smoke Control Features

This fire area is not served by a ventilation system. After the fire, smoke is removed from the fire area by using portable exhaust fans and flexible ductwork.

Fire Protection Adequacy Evaluation

A fire in this area is detected by a fire detector which produces an audible alarm locally and both visual and audible alarms in the main control room and the security central alarm station. The fire is extinguished manually using hose streams or portable extinguishers.

Combustible materials in this fire area are listed in Table 9A-3, and consist primarily of cable insulation and lubricant associated with the elevator hoisting machinery. This is a light hazard fire area and the rate of fire growth is expected to be slow. Two-hour fire barriers provide adequate separation from adjacent fire areas since the fire will be contained within this fire area.

No ventilation systems penetrate the elevator enclosure.

9A.3.2.5 Not used.

9A.3.2.6 Not used.

9A.3.2.7 Fire Area 2000 AF 03

This fire area is comprised of the following room(s):

Room No.	
S03	Stairwell

This stairwell serves the northwest portion of the turbine building from 149′-0″ to 187′-3″. The walls of this enclosure that are exposed to the turbine building interior are constructed with a concrete/steel composite material having a minimum fire rating of 2 hours. The walls of the enclosures that face the yard area would not be exposed to the turbine building interior; therefore, these outside walls are constructed with an exterior siding common to the overall siding used for the turbine building. There are no safety-related components or systems in this fire area that contain radioactive material. There are no systems in this fire area that contain radioactive material. The quantity of combustible

materials in the stairwell is negligible, and no fire is postulated in this fire area. A fire protection hose riser is located in the stairwell with NFPA Class I hose connections at intermediate stair landings.

This stairwell is not served by a ventilation system.

9A.3.2.8 Fire Area 2033 AF 02

This fire area is comprised of the following room(s):

Room No.	
20303	Motor driven fire pump room

There are no systems in this fire area which contain radioactive material.

Fire Detection and Suppression Features

- Fire detectors
- Hose station(s)
- Portable fire extinguishers

Smoke Control Features

Local heating and ventilation for the motor driven fire pump room is supplied by the turbine building ventilation system (VTS) as described in Subsection 9.4.9. During normal operation, a wall mounted exhaust ventilator pulls in outside air through a wall louver. Should there be a turbine building fire outside the motor driven fire pump room, the use of outside air for ventilation prevents smoke from affecting the operation of the motor driven fire pump. Following a fire, the wall mounted exhaust ventilator, if available, can be used to vent smoke to outside the turbine building. If the exhaust ventilator is not available, an exterior door can be opened.

Fire Protection Adequacy Evaluation

A fire in this area is detected by a fire detector which produces an audible alarm locally with both visual and audible alarms in the main control room and security central alarm station. The fire is extinguished by operation of manual hose streams or portable extinguishers.

Combustible materials in this fire area are listed in Table 9A-3. The fire area has a low concentration of combustibles, primarily cable insulation, with moderate heat release rates. There are no concentrations of combustibles that could challenge the fire area barrier. The 3-hour fire barriers that separate this fire area from the rest of the turbine building provide sufficient separation to prevent the fire from propagating beyond the fire area.

As the motor driven fire pump room ventilation system supply and exhaust are both from outside the turbine building and as no ductwork penetrates the motor driven fire pump room fire area boundary, this ventilation system does not contribute to the spread of the fire or smoke to other fire areas.

9A.3.2.9 Fire Area 2040 AF 01

This fire area is comprised of the following room(s):

Room No.	
20407	Lube oil storage room

This fire area contains the clean and dirty lube oil storage tanks and the waste oil storage tank. There are no systems in this fire area which contain radioactive material.

Fire Detection and Suppression Features

- Fire detectors
- Automatic water spray system
- Hose station(s)
- Portable fire extinguishers

Smoke Control Features

Local heating and ventilation for the lube oil storage room is supplied by the turbine building ventilation system (VTS) as described in Subsection 9.4.9. During normal operation, an exhaust ventilator mounted on an exterior wall pulls air in from the turbine building through a wall louver and maintains the lube oil storage room at a lower pressure than turbine building general areas. Fire dampers close automatically on high temperature to control the spread of fire and smoke. Following a fire, the exhaust ventilator, if available, can be used to vent smoke to outside the turbine building.

Fire Protection Adequacy Evaluation

A fire in this area is detected by a fire detector which produces an audible alarm locally with both visual and audible alarms in the main control room and security central alarm station. The fire is extinguished by operation of an automatic sprinkler system or manually, using hose streams or portable extinguishers.

Combustible materials in this fire area are listed in Table 9A-3. Due to the concentration of lubricating oil, this fire area is an extra hazard fire area. This area has a high combustible loading and fires with high heat release rates could develop rapidly. Therefore, an automatic fire suppression system is provided. The 3-hour fire barriers that separate this fire area from the rest of the turbine building provide sufficient separation to prevent the fire from propagating beyond this fire area.

The lube oil storage area ventilation system portion of the turbine building ventilation system does not contribute to the spread of the fire or smoke to other fire areas because fire dampers isolate the fire area.

9A.3.2.10 Fire Area 2043 AF 01

This fire area is comprised of the following room(s):

Room No.	
20401	Secondary sampling laboratory

There are no systems in this fire area which contain radioactive material.

Fire Detection and Suppression Features

- Fire detectors
- Wet pipe sprinklers
- Hose station(s)
- Portable fire extinguishers

Smoke Control Features

The turbine building ventilation system (VTS) personnel area HVAC subsystem, as described in Subsection 9.4.9, provides heating and cooling to the secondary sampling laboratory. Fire dampers

close automatically on high temperature to control the spread of fire and smoke. Smoke is removed from the fire area using portable exhaust fans and flexible ductwork.

Fire Protection Adequacy Evaluation

A fire in this area is detected by a fire detector which produces an audible alarm locally with both visual and audible alarms in the main control room and security central alarm station. The fire is extinguished by the automatic suppression system or manually, using hose streams or portable extinguishers.

Combustible materials in this fire area are listed in Table 9A-3. As volatile chemicals are likely to be present, this fire area is an extra hazard fire area. Due to high heat release rates, fires could develop rapidly. Therefore, an automatic fire suppression system is provided. There are no concentrations of combustibles that could challenge the fire area barrier. The 3-hour fire barriers that separate this fire area from the rest of the turbine building provide sufficient separation to prevent the fire from propagating beyond the fire area.

The VTS personnel area HVAC subsystem serving the secondary sampling laboratory does not contribute to the spread of the fire or smoke to other fire areas. Fire area boundaries are equipped with fire dampers to prevent the propagation of fire between fire areas.

9A.3.2.11 Fire Area 2050 AF 01

This fire area is comprised of the following room(s):

Room No.	
20504	Turbine lube oil reservoir room

There are no systems in this fire area which contain radioactive material.

Fire Detection and Suppression Features

- Fire detectors
- Automatic water spray system
- Hose station(s)
- Portable fire extinguishers

Smoke Control Features

Local heating and ventilation for the turbine lube oil reservoir room is supplied by the turbine building ventilation system (VTS) as described in Subsection 9.4.9. During normal operation, an exhaust ventilator mounted on an exterior wall pulls air in from the turbine building through a wall louver and maintains the turbine lube oil reservoir room at a lower pressure than turbine building general areas. Fire dampers close automatically on high temperature to control the spread of fire and smoke. Following a fire, the exhaust ventilator, if available, can be used to vent smoke to outside the turbine building.

Fire Protection Adequacy Evaluation

A fire in this area is detected by a fire detector which produces an audible alarm locally with both visual and audible alarms in the main control room and security central alarm station. The fire is extinguished by operation of automatic sprinkler system or manually, using hose streams or portable extinguishers.

Combustible materials in this fire area are listed in Table 9A-3. Due to the concentration of lubricating oil, this fire area is an extra hazard fire area. This area has a high combustible loading and fires with

high heat release rates could develop rapidly. Therefore, an automatic fire suppression system is provided. The 3-hour fire barriers that separate this fire area from the rest of the turbine building provide sufficient separation to prevent the fire from propagating beyond the fire area.

The turbine lube oil reservoir ventilation system portion of the turbine building ventilation system does not contribute to the spread of the fire or smoke to other fire areas because fire dampers isolate the fire area.

9A.3.2.12 Fire Area 2052 AF 01

This fire area is comprised of the following room(s):

Room No.	
20502	Switchgear room 1

This fire area is the turbine building switchgear room 1 and contains high voltage electrical equipment. There are no systems in this fire area which contain radioactive material.

Fire Detection and Suppression Features

- Fire detectors
- Hose station(s)
- Portable fire extinguishers

Smoke Control Features

The turbine building ventilation system (VTS) electrical equipment rooms HVAC subsystem, as described in Subsection 9.4.9, provides heating and cooling to switchgear room 1. Fire dampers close automatically on high temperature to control the spread of fire and smoke. Smoke is removed from the fire area using portable exhaust fans and flexible ductwork.

Fire Protection Adequacy Evaluation

A fire in this area is detected by a fire detector which produces an audible alarm locally with both visual and audible alarms in the main control room and security central alarm station. The fire is extinguished manually using hose streams or portable extinguishers.

Combustible materials in this fire area are listed in Table 9A-3. The fire area has a low concentration of combustibles, primarily cable insulation, with moderate heat release rates. The 2-hour fire barriers that separate this fire area from the rest of the turbine building provide sufficient separation to prevent the fire from propagating beyond the fire area.

The VTS electrical equipment rooms HVAC subsystem of the turbine building ventilation system serving switchgear room 1 does not contribute to the spread of the fire or smoke to other fire areas because fire dampers isolate the fire area.

9A.3.2.13 Fire Area 2053 AF 01

This fire area is comprised of the following room(s):

Room No.	
20503	Electrical equipment room

This fire area is the electrical equipment room and contains high voltage electrical equipment. There are no systems in this fire area which contain radioactive material.

Fire Detection and Suppression Features

- Fire detectors
- Hose station(s)
- Portable fire extinguishers

Smoke Control Features

The turbine building ventilation system (VTS) electrical equipment rooms HVAC subsystem, as described in Subsection 9.4.9, provides heating and cooling to the electrical equipment room. Fire dampers close automatically on high temperature to control the spread of fire and smoke. Smoke is removed from the fire area using portable exhaust fans and flexible ductwork.

Fire Protection Adequacy Evaluation

A fire in this area is detected by a fire detector which produces an audible alarm locally with both visual and audible alarms in the main control room and security central alarm station. The fire is extinguished manually using hose streams or portable extinguishers.

Combustible materials in this fire area are listed in Table 9A-3. The fire area has a low concentration of combustibles, primarily cable insulation, with moderate heat release rates. There are no concentrations of combustibles that could challenge the fire area barrier. The 2-hour fire barriers that separate this fire area from the rest of the turbine building provide sufficient separation to prevent the fire from propagating beyond the fire area.

The VTS electrical equipment rooms HVAC subsystem of the turbine building ventilation system serving the electrical equipment room does not contribute to the spread of the fire or smoke to other fire areas because fire dampers isolate the fire area.

9A.3.2.14 Fire Area 2053 AF 02

This fire area is comprised of the following room(s):

Room No.	
20501	Switchgear room 2

This fire area contains high voltage electrical equipment. There are no systems in this fire area which contain radioactive material.

Fire Detection and Suppression Features

- Fire detectors
- Hose station(s)
- Portable fire extinguishers

Smoke Control Features

The turbine building ventilation system (VTS) electrical equipment rooms HVAC subsystem, as described in Subsection 9.4.9, provides heating and cooling to switchgear room 2. Fire dampers close automatically on high temperature to control the spread of fire and smoke. Smoke is removed from the fire area using portable exhaust fans and flexible ductwork.

Fire Protection Adequacy Evaluation

A fire in this area is detected by a fire detector which produces an audible alarm locally with both visual and audible alarms in the main control room and security central alarm station. The fire is extinguished manually using hose streams or portable extinguishers.

Combustible materials in this fire area are listed in Table 9A-3. The fire area has a low concentration of combustibles, primarily cable insulation, with moderate heat release rates. There are no concentrations of combustibles that could challenge the fire area barrier. The 2-hour fire barriers that separate this fire area from the rest of the turbine building provide sufficient separation to prevent the fire from propagating beyond the fire area.

The VTS electrical equipment rooms HVAC subsystem of the turbine building ventilation system serving switchgear room 2 does not contribute to the spread of the fire or smoke to other fire areas because fire dampers isolate the fire area.

9A.3.2.15 Fire Area 2141 AF 01

This turbine building fire area contains non-Class 1E batteries. This fire area contains one fire zone:

Fire Zone	Room No.	
2141 AF 21481	21481	Battery room

There are no systems in this fire area that normally contain radioactive material.

Fire Detection and Suppression Features

- Fire detectors
- Hose station(s)
- Portable fire extinguishers

Smoke Control Features

The south bay equipment HVAC subsystem of the turbine building ventilation system (VTS) servicing this fire area stops upon detection of smoke in the supply duct. Fire dampers close automatically on high temperature to isolate this fire area. These actions control the spread of fire and smoke. Other VTS subsystems continue to provide ventilation to the unaffected fire areas. After the fire, smoke is removed from this fire area by reopening the fire dampers and operating the ventilation system.

Fire Protection Adequacy Evaluation

A fire in this fire area is detected by a fire detector which produces an audible alarm locally, and both visual and audible alarms in the main control room and the security central alarm station. The fire is extinguished manually using hose streams or portable extinguishers.

Combustible materials in this fire area are listed in Table 9A-3, and they primarily consist of electrical cable insulation. The combustible materials are relatively uniformly distributed throughout the fire area. This is a light hazard fire area, and the rate of fire growth is expected to be slow. Minimum 2-hour fire barriers are provided.

The ventilation system does not contribute to the spread of the fire or smoke as described in the Smoke Control Features section above.

9A.3.2.16 Fire Area 2142 AF 01

This turbine building fire area contains non-Class 1E battery charging equipment. This fire area contains one fire zone:

Fire Zone	Room No.	
2142 AF 21482	21482	Battery charger room

There are no systems in this fire area that normally contain radioactive material.

Fire Detection and Suppression Features

- Fire detectors
- Hose station(s)
- Portable fire extinguishers

Smoke Control Features

The south bay equipment HVAC subsystem of the turbine building ventilation system (VTS) servicing this fire area stops upon detection of smoke in the supply duct. Fire dampers close automatically on high temperature to isolate this fire area. These actions control the spread of fire and smoke. Other VXS subsystems continue to provide ventilation to the unaffected fire areas. After the fire, smoke is removed from this fire area by reopening the fire dampers and operating the ventilation system in the smoke exhaust ventilation mode.

Fire Protection Adequacy Evaluation

A fire in this fire area is detected by a fire detector which produces an audible alarm locally, and both visual and audible alarms in the main control room and the security central alarm station. The fire is extinguished manually using hose streams or portable extinguishers.

Combustible materials in this fire area are listed in Table 9A-3, and they primarily consist of electrical cable insulation. The combustible materials are relatively uniformly distributed throughout the fire area. This is a light hazard fire area, and the rate of fire growth is expected to be slow. Minimum 2-hour fire barriers are provided.

The ventilation system does not contribute to the spread of the fire or smoke as described in the Smoke Control Features section above.

9A.3.3 Yard Area and Outlying Buildings

The fire protection system yard main and the location of hydrants and hose houses are described in Subsection 9.5.1. Miscellaneous yard areas do not contain safety-related components or systems, do not contain radioactive materials, and are located such that a fire or effects of a fire, including smoke, do not adversely affect any safety-related systems or equipment. Miscellaneous areas include such structures, for example, as maintenance shops, warehouses, the administrative building, training/office centers, and flammable and combustible material storage tanks. The miscellaneous areas are located outside of the nuclear island, which is separated from the other yard areas by 3-hour fire rated barriers. Fire detection and suppression are provided as determined by the fire hazards analysis and applicable building codes and insurance company loss prevention standards.

The cooling towers are not used as the ultimate heat sink or for fire protection purposes. Therefore, the guidance specified by BTP CMEB 9.5-1 is not applicable, except the cooling towers comply with guidance specified by BTP CMEB 9.5-1 in that they are so located that a fire will not adversely affect

any safety-related systems or equipment (Table 9.5.1-1, Item 225). The cooling tower serves no safety-related function and has no nuclear safety design basis. The cooling tower does not contain any equipment capable of releasing radioactivity to the atmosphere. The cooling towers, with their circulating water pump structure, are remotely located from HVAC air intakes such that smoke and products of combustion do not affect any safety-related plant areas.

Stairwells in miscellaneous buildings located in the yard serving as escape routes or access routes for firefighting, are enclosed in masonry or concrete towers with a minimum fire resistance rating of 2 hours and self-closing Class B fire doors. The two hour fire-resistance rating for the masonry or concrete material is based on testing conducted in accordance with ASTM E119 (Reference 201) and NFPA 251 (Reference 202).

9A.3.4 Annex Building

Figure 9A-4 identifies fire areas and fire zones within the annex building and illustrates the fire resistance of the fire area boundaries.

A fire in the annex building fire areas does not affect safe shutdown capability. A fire is confined to the fire area, and fire areas within the annex building are separated from the safety-related areas of the nuclear island by a 3-hour fire barrier wall, except for those fire areas which include portions of the auxiliary building. Closing of fire dampers in the ventilation system serving the annex building fire areas does not affect safe shutdown systems. Safe shutdown systems are generally served by independent ventilation systems. Fire areas which include portions of the auxiliary building are discussed later in this subsection.

Neither a fire nor fire suppression activities in annex building fire areas affect the safe shutdown capability of components located in other fire areas.

Floor drains are sized to handle water flow from fire protection systems without a significant accumulation of water in the fire area. Flooding of components required for safe shutdown is not a concern because there are no safe shutdown components in the annex building.

No fire in the annex building can cause spurious actions which could cause a breach in the reactor coolant boundary or defeat safety related decay heat removal capability or cause an increase in shutdown reactivity of the reactor.

9A.3.4.1 Fire Area 4001 AF 01

This fire area is comprised of the following room(s):

Room No.	
S01	Stairwell

This stairwell is enclosed by fire barrier walls having a minimum rating of 2 hours. The structural walls are concrete, and the nonstructural walls are made of a concrete/steel composite material. The quantity of combustible materials in the stairwell is negligible and no fire is postulated in this fire area. NFPA Class I hose connections are provided in the stairwell for use in fighting fires in other fire areas.

The equipment room HVAC subsystem of the annex/auxiliary building non-radioactive ventilation system (VXS) serves this fire area. Air at a positive pressure is supplied to the stairwell and exfiltrates through small openings such as under the fire doors. For a fire in the fire area outside the stairwell in which the supply penetration is located, a fire damper closes automatically on high temperature to prevent the spread of fire and smoke into the stairwell. For fires not affecting the ventilation system,

the system continues to provide ventilation to the stairwell, minimizing the potential for migration of smoke.

9A.3.4.2 Fire Area 4001 AF 02

This fire area is comprised of the elevator shaft and elevator.

This elevator is enclosed by fire barrier walls having a minimum rating of 2 hours.

Fire Detection and Suppression Features

- Fire detectors
- Hose station(s)
- Portable fire extinguishers

Smoke Control Features

A wall exhaust fan and air intake louvers provide normal ventilation for the elevator shaft. After the fire, smoke is removed from the fire area by using the wall exhaust fan or portable exhaust fans and flexible ductwork.

Fire Protection Adequacy Evaluation

A fire in this area is detected by a fire detector which produces an audible alarm locally and both visual and audible alarms in the main control room and the security central alarm station. The fire is extinguished manually using hose streams or portable extinguishers.

Combustible materials in this fire area are listed in Table 9A-3, and consist primarily of cable insulation and lubricant associated with the elevator hoisting machinery. This is a light hazard fire area and the rate of fire growth is expected to be slow. Two-hour fire barriers provide adequate separation from adjacent fire areas since the fire will be contained within this fire area.

9A.3.4.3A Fire Area 4002 AF 01

This fire area is comprised of the following room(s):

Room No.	
S02	Stairwell

The west wall of this stairwell is exposed to the annex building interior, and it is constructed with a concrete/steel composite material having a minimum fire rating of 2 hours. The walls of the enclosures that face the yard area would not be exposed to the annex building interior. Therefore, these outside walls are constructed with an exterior siding common to the overall siding used for the annex building. The quantity of combustible materials in the stairwell is negligible and no fire is postulated in this fire area. NFPA Class I hose connections are provided in the stairwell for use in fighting fires in other fire areas.

The health physics and hot machine shop HVAC system (VHS) serves this fire area. Air at a positive pressure is supplied to the stairwell and exfiltrates through small openings such as under the fire doors. For a fire in the fire area outside the stairwell in which the supply penetration is located, a fire damper closes automatically on high temperature to prevent the spread of fire and smoke into the stairwell. For fires not affecting the ventilation system, the system continues to provide ventilation to the stairwell, minimizing the potential for migration of smoke.

9A.3.4.3B Fire Area 4002 AF 03

This fire area is comprised of the elevator shaft and elevator.

This elevator is enclosed by fire barrier walls having a minimum rating of 2 hours.

Fire Detection and Suppression Features

- Fire detectors
- Hose station(s)
- Portable fire extinguishers

Smoke Control Features

A wall exhaust fan and air intake louvers provide normal ventilation for the elevator shaft. After the fire, smoke is removed from the fire area by using the wall exhaust fan or portable exhaust fans and flexible ductwork.

Fire Protection Adequacy Evaluation

A fire in this area is detected by a fire detector which produces an audible alarm locally and both visual and audible alarms in the main control room and the security central alarm station. The fire is extinguished manually using hose streams or portable extinguishers.

Combustible materials in this fire area are listed in Table 9A-3, and they consist primarily of cable insulation and lubricant associated with the elevator hoisting machinery. This is a light hazard fire area, and the rate of fire growth is expected to be slow. Two-hour fire barriers provide adequate separation from adjacent fire areas since the fire will be contained within this fire area.

9A.3.4.4 Fire Area 4002 AF 02

This fire area is comprised of the following room(s):

Room No.	
S04	Stairwell

This stairwell serves the southeast corner of the annex building. The walls of this enclosure that are exposed to the annex building interior are constructed with a concrete/steel composite material having a minimum fire rating of 2 hours. The walls of the enclosures that face the yard area would not be exposed to the annex building interior. Therefore, these outside walls are constructed with an exterior siding common to the overall siding used for the annex building. The quantity of combustible materials in the stairwell is negligible and no fire is postulated in this fire area. NFPA Class I hose connections are provided in the stairwell for use in fighting fires in other fire areas.

The general area HVAC subsystem of the annex/auxiliary building non-radioactive ventilation system (VXS) serves this fire area. Air at a positive pressure is supplied to the stairwell and exfiltrates through small openings such as under the fire doors. For a fire in the fire area outside the stairwell in which the supply penetration is located, a fire damper closes automatically on high temperature to prevent the spread of fire and smoke into the stairwell. For fires not affecting the ventilation system, the system continues to provide ventilation to the stairwell, minimizing the potential for migration of smoke.

9A.3.4.5 Fire Area 4003 AF 01

This fire area encompasses four levels of the annex building and contains demineralized water deoxygenating equipment and air handling equipment. The fire area is subdivided into the following fire zones:

Fire Zone	Room No.	
● 4003 AF 40340	40340	Demineralized water deoxygenating room
● 4003 AF 40442	40442	Boric acid batching room
● 4003 AF 40503	40503	Lower south air handling equipment room
● 4003 AF 40503	40504	Air intake plenum 2
● 4003 AF 40503	40505	Security room
● 4003 AF 40601	40601	Upper south air handling equipment room
● 4003 AF 40601	40602	Air intake plenum 3

There are no systems in this fire area which normally contain radioactive material.

Fire Detection and Suppression Features

- Fire detectors
- Hose station(s)
- Portable fire extinguishers

Smoke Control Features

The mechanical equipment areas HVAC subsystem of the annex/auxiliary building non-radioactive ventilation system (VXS) servicing this fire area stops upon detection of smoke in the supply duct. Fire dampers close automatically on high temperature to isolate this fire area. This action controls the spread of fire and smoke. Other VXS subsystems continue to provide ventilation to the unaffected fire areas. After the fire, smoke is removed from this fire area by using portable exhaust fans and flexible ductwork.

Fire Protection Adequacy Evaluation

A fire in this fire area is detected by a fire detector which produces an audible alarm locally and both visual and audible alarms in the main control room and the security central alarm station. The fire is extinguished manually using hose streams or portable extinguishers.

Combustible materials in this fire area are listed in Table 9A-3 and primarily consist of electrical cable insulation and ordinary combustible materials such as wood and paper. Combustibles are relatively uniformly distributed throughout each fire zone. This is a light hazard fire area and the rate of fire growth is expected to be slow. Minimum two-hour fire barriers provide adequate separation from adjacent fire areas. The building exterior wall is not rated.

The ventilation system does not contribute to the spread of the fire or smoke as described in the Smoke Control Features section above.

9A.3.4.6 Fire Area 4003 AF 02

This fire area is comprised of the following room(s):

Room No.

S03 Stairwell

This stairwell serves the east side of the annex building. The walls of this enclosure that are exposed to the annex building interior are constructed with a concrete/steel composite material having a minimum fire rating of 2 hours. The walls of the enclosures that face the yard area would not be exposed to the annex building interior. Therefore, these outside walls are constructed with an exterior siding common to the overall siding used for the annex building. The quantity of combustible materials in the stairwell is negligible and no fire is postulated in this fire area. NFPA Class I hose connections are provided in the stairwell for use in fighting fires in other fire areas.

The mechanical equipment areas HVAC subsystem of the annex/auxiliary building non-radioactive ventilation system (VXS) serves this fire area. Air at a positive pressure is supplied to the stairwell and exfiltrates through small openings such as under the fire doors. For a fire in the fire area outside the stairwell in which the supply penetration is located, a fire damper closes automatically on high temperature to prevent the spread of fire and smoke into the stairwell. For fires not affecting the ventilation system, the system continues to provide ventilation to the stairwell, minimizing the potential for migration of smoke.

9A.3.4.7 Fire Area 4031 AF 01

This annex building fire area contains one train of the non-Class 1E batteries and battery charging equipment. This fire area is subdivided into the following fire zones:

Fire Zone	Room No.	
● 4031 AF 40307	40307	Battery room 1
● 4031 AF 40308	40308	Battery charger room 1

There are no systems in this fire area which normally contain radioactive material.

Fire Detection and Suppression Features

- Fire detectors
- Hose station(s)
- Portable fire extinguishers

Smoke Control Features

The equipment room HVAC subsystem of the annex/auxiliary building non-radioactive ventilation system (VXS) servicing this fire area stops upon detection of smoke in the supply duct. Fire dampers close automatically on high temperature to isolate this fire area. These actions control the spread of fire and smoke. Other VXS subsystems continue to provide ventilation to the unaffected fire areas. After the fire, smoke is removed from this fire area by reopening the fire dampers and operating the ventilation system in the smoke exhaust ventilation mode.

Fire Protection Adequacy Evaluation

A fire in this fire area is detected by a fire detector which produces an audible alarm locally, and both visual and audible alarms in the main control room and the security central alarm station. The fire is extinguished manually using hose streams or portable extinguishers.

Combustible materials in this fire area are listed in Table 9A-3 and primarily consist of electrical cable insulation. The combustible materials are relatively uniformly distributed throughout the fire area. This is a light hazard fire area and the rate of fire growth is expected to be slow. Minimum two-hour fire barriers are provided. The battery room is also separated from the adjacent charging room by a 1-hour fire barrier, which limits the spread of fire within the fire area.

The ventilation system does not contribute to the spread of the fire or smoke as described in the Smoke Control Features section above.

9A.3.4.8 Fire Area 4031 AF 02

This annex building fire area contains one train of the non-Class 1E batteries and battery charging equipment. This fire area is subdivided into the following fire zones:

Fire Zone	Room No.	
● 4031 AF 40309	40309	Battery room 2
● 4031 AF 40310	40310	Battery charger room 2
● 4041 AF 40411	40411	Computer room B
● 4041 AF 40411	40412	Shift turnover room

There are no systems in this fire area which normally contain radioactive material.

Fire Detection and Suppression Features

- Fire detectors
- Hose station(s)
- Portable fire extinguishers

Smoke Control Features

The equipment room HVAC subsystem of the annex/auxiliary building non-radioactive ventilation system (VXS) servicing fire zones 4031 AF 40309 and 4031 AF 40310 stops upon detection of smoke in the supply duct. Combination-fire dampers close automatically in response to a smoke detector signal or high temperature to isolate fire zone 4031 AF 40310. Other VXS subsystems continue to provide ventilation to the unaffected fire areas. This subsystem may be restarted and manually realigned to the once-through smoke exhaust ventilation mode to minimize the potential migration of smoke. If the exhaust fire-smoke damper for this fire area is operable, the damper may be reopened to further reduce the migration of smoke. After the fire, smoke is removed from this fire area by reopening the fire dampers and operating the ventilation system in the smoke exhaust ventilation mode.

Fire dampers in the main control room/control support area HVAC subsystem of the NI non-radioactive ventilation system (VBS) close automatically on high temperature to isolate fire zone 4041 AF 40411. Combination fire-smoke dampers close automatically in response to a smoke detector signal or high temperature to control the spread of fire and smoke. The balance of this and other VBS subsystems continues to provide ventilation to the unaffected fire areas. The subsystem may be manually realigned to the once-through ventilation mode to minimize the potential for migration of smoke and hot gases. If the exhaust fire-smoke damper for this fire area is operable, the damper may be reopened to further reduce the migration of smoke. After the fire, smoke is removed from the fire area by reopening the fire dampers and operating the ventilation system in the once-through ventilation mode. Smoke from a fire in this fire area does not affect safe shutdown components in fire areas that are served by other ventilation systems, subsystems, or air distribution headers.

Fire Protection Adequacy Evaluation

A fire in this fire area is detected by a fire detector which produces an audible alarm locally and both visual and audible alarms in the main control room and the security central alarm station. The fire is extinguished by manually using hose streams or portable extinguishers.

Combustible materials in this fire area are listed in Table 9A-3 and primarily consist of electrical cable insulation. The combustible materials are relatively uniformly distributed throughout the fire area. This is a light hazard fire area and the rate of fire growth is expected to be slow. Minimum two-hour fire barriers are provided. The battery room is also separated from the adjacent charging room by a 1-hour fire barrier, which limits the spread of fire within the fire area.

The ventilation system does not contribute to the spread of the fire or smoke as described in the Smoke Control Features section above.

9A.3.4.9 Fire Area 4031 AF 05

This fire area is subdivided into the following fire zones:

Fire Zone	Room No.	
● 4031 AF 40300	40301	Access corridor
● 4031 AF 40300	40305	Security room
● 4031 AF 40303	40303	Corridor
● 4031 AF 40303	40304	Restroom

There are no systems in this fire area which normally contain radioactive material.

Fire Detection and Suppression Features

- Fire detectors
- 2 Hose stations in corridor 40303
- Portable fire extinguishers

Smoke Control Features

The equipment room HVAC subsystem of the annex/auxiliary building non-radioactive ventilation system (VXS) servicing this fire area stops upon detection of smoke in the supply duct. Fire dampers close automatically on high temperature to isolate this fire area. These actions control the spread of fire and smoke. Other VXS subsystems continue to provide ventilation to the unaffected fire areas. After the fire, smoke is removed from this fire area by reopening the fire dampers and operating the ventilation system in the smoke exhaust ventilation mode.

Fire Protection Adequacy Evaluation

A fire in this fire area is detected by a fire detector which produces an audible alarm locally and both visual and audible alarms in the main control room and the security central alarm station. The fire is extinguished manually using hose streams or portable extinguishers.

Combustible materials in this fire area are listed in Table 9A-3 and primarily consist of electrical cable insulation and ordinary combustible materials such as paper, wood, and plastic. Combustibles are relatively uniformly distributed throughout each fire zone. This is a light hazard fire area and the rate of fire growth is expected to be slow. Minimum two-hour fire barriers are provided. Fire zones within this fire area are separated by walls as shown in Figure 9A-4. The walls for the exit corridors are rated for a minimum of 1 hour in accordance with the Uniform Building Code. The building exterior walls are not rated.

The ventilation system does not contribute to the spread of the fire or smoke as described in the Smoke Control Features section above.

9A.3.4.10 Fire Area 4031 AF 06

This fire area is comprised of the following room(s):

Room No.	
40306	Corridor
40302	Security room
40300	Security room

This fire area contains computer and communication equipment. There are no systems in this fire area which normally contain radioactive material.

Fire Detection and Suppression Features

- Fire detectors
- 2 Hose stations in Corridor 40303
- Portable fire extinguishers

Smoke Control Features

The equipment room HVAC subsystem of the annex/auxiliary building non-radioactive ventilation system (VXS) servicing this fire area stops upon detection of smoke in the supply duct. Fire dampers close automatically on high temperature to isolate this fire area. These actions control the spread of fire and smoke. Other VXS subsystems continue to provide ventilation to the unaffected fire areas. After the fire, smoke is removed from this fire area by reopening the fire dampers and operating the ventilation system in the smoke exhaust ventilation mode.

Fire Protection Adequacy Evaluation

A fire in this fire area is detected by a fire detector which produces an audible alarm locally and both visual and audible alarms in the main control room and the security central alarm station. The fire is extinguished manually using hose streams or portable extinguishers.

Combustible materials in this fire area are listed in Table 9A-3 and primarily consist of electrical cable insulation and ordinary combustible materials such as paper, wood, and plastic. Combustibles are relatively uniformly distributed throughout each fire zone. This is a light hazard fire area and the rate of fire growth is expected to be slow. Minimum two-hour fire barriers are provided.

The ventilation system does not contribute to the spread of the fire or smoke as described in the Smoke Control Features section above.

9A.3.4.11 Fire Area 4032 AF 01

This fire area is comprised of the following room(s):

Room No.	
40326	Non-radiologically controlled area entry/exit area
40327	Health physics office
40350	Radiologically controlled area entry/exit area
40351	Protective clothes pickup and suitup
40352	Access corridor

40353	Office
40354	Health physics counting
40355	Decontamination room
40356	Corridor
40360	Decontamination room
40361	Corridor

The area is used for decontamination and monitoring of personnel leaving the radiological control area of the plant. Low levels of radioactive materials may be present within the fire area.

Fire Detection and Suppression Features

- Fire detectors
- Hose station(s)
- Portable fire extinguishers

Smoke Control Features

The health physics and hot machine shop HVAC system (VHS) servicing this fire area stops upon detection of smoke in the area or in the supply duct. Fire dampers close automatically on high temperature to isolate this fire area. These actions control the spread of fire and smoke. After the fire, smoke is removed from this fire area by reopening the fire dampers and starting the exhaust fans serving this area.

Fire Protection Adequacy Evaluation

A fire in this fire area is detected by a fire detector which produces an audible alarm locally and both visual and audible alarms in the main control room and the security central alarm station. The fire is extinguished manually using hose streams or portable extinguishers.

Combustible materials in this fire area are listed in Table 9A-3 and primarily consist of electrical cable insulation and ordinary combustible material such as wood and paper. Combustibles are relatively uniformly distributed throughout the fire area. This is a light hazard fire area and the rate of fire growth is expected to be slow. Minimum two-hour fire barriers are provided and the building exterior wall is not rated.

The ventilation system does not contribute to the spread of the fire or smoke as described in the Smoke Control Features section above.

9A.3.4.12 Fire Area 4032 AF 02

This fire area is comprised of the following room(s):

Room No.	
40357	Containment access corridor elevation 107′-2″
40362	Radwaste access corridor
40415	Corridor

This fire area is the corridor used to transport equipment and personnel through the annex building and auxiliary building to and from containment and provides access from the annex building to the radwaste building. As such, low levels of radioactive material may be present within the fire area.

Fire Detection and Suppression Features

- Fire detectors
- Wet pipe sprinklers (Elevation 107′-2″)
- Hose station(s)
- Portable fire extinguishers

Smoke Control Features

The auxiliary/annex building subsystem of the radiologically controlled area ventilation system (VAS) servicing this fire area alarms in the main control room upon detection of smoke in the area or in the supply or exhaust duct. Fire dampers close automatically on high temperature to isolate this fire area. The balance of the VAS auxiliary/annex building ventilation subsystem remains in operation unless plant operators determine that there is a need to manually shut down the subsystem. The balance of VAS remains in operation. These actions control the spread of fire and smoke. After the fire, smoke is removed from this fire area by reopening the fire dampers. The ventilation exhaust system serving the area exhausts smoke to the atmosphere.

Fire Protection Adequacy Evaluation

A fire in this fire area is detected by a fire detector which produces an audible alarm locally and both visual and audible alarms in the main control room and the security central alarm station. The fire is extinguished by the wet pipe sprinkler system or manually using hose streams or portable extinguishers.

Combustible materials in this fire area are listed in Table 9A-3 and primarily consist of electrical cable insulation and ordinary combustible material such as wood and paper. Diesel fuel may be present when there is a truck in the containment access corridor. Combustibles are relatively uniformly distributed throughout the fire area except when transient combustibles are present. This is an ordinary hazard fire area when transient combustibles are present and the rate of fire growth may be rapid. Minimum two-hour fire barriers are provided and the building exterior wall is not rated. An automatic suppression system is provided to address transient combustibles.

The ventilation system does not contribute to the spread of the fire or smoke as described in the Smoke Control Features section above.

9A.3.4.13 Fire Area 4033 AF 01

This fire area is comprised of the following room(s):

Room No.	
40358	Hot machine shop
40359	Pump seal shop

The shop is used for decontamination and repair of equipment from the radiological control area of the plant. As such, low levels of radioactive materials may be present within the fire area.

Fire Detection and Suppression Features

- Fire detectors
- Hose station(s)
- Portable fire extinguishers

Smoke Control Features

The health physics and hot machine shop HVAC system (VHS) servicing this fire area stops upon detection of smoke in the area or in the duct. Fire dampers close automatically on high temperature to isolate this fire area. These actions control the spread of fire and smoke. After the fire, smoke is removed from this fire area by reopening the fire dampers and starting the exhaust fans serving this area.

Fire Protection Adequacy Evaluation

A fire in this fire area is detected by a fire detector which produces an audible alarm locally and both visual and audible alarms in the main control room and the security central alarm station. The fire is extinguished manually using hose streams or portable extinguishers.

Combustible materials in this fire area are listed in Table 9A-3 and primarily consist of electrical cable insulation and ordinary combustible materials such as wood and paper. Combustibles are relatively uniformly distributed throughout the fire area. This is an ordinary hazard fire area and the rate of fire growth is expected to be slow. Minimum two-hour fire barriers are provided. The building exterior wall is not rated.

The ventilation system does not contribute to the spread of the fire or smoke as described in the Smoke Control Features section above.

9A.3.4.14 Fire Area 4034 AF 01

This fire area is subdivided into the following fire zones:

Fire Zone	Room No.	
4034 AF 40311	40311	Corridor
4034 AF 40311	40312	Corridor
4034 AF 40311	40373	Corridor
4034 AF 40313	40313	Office
4034 AF 40313	40314	Office
4034 AF 40316	40316	Computer Room L1/2
4034 AF 40317	40317	Computer Room L3
4034 AF 40318	40318	ALARA briefing room and HP monitoring room
4034 AF 40320	40320	Women's change room
4034 AF 40322	40321	Janitor closet
4034 AF 40322	40322	Men's change room
4034 AF 40322	40323	Water heater room
4034 AF 40322	40324	Drying area
4034 AF 40322	40325	Shower room
4034 AF 40370	40370	Rest room
4034 AF 40370	40371	Conference room
4034 AF 40370	40372	Conference room
4034 AF 40370	40374	Corridor
4034 AF 40370	40375	Conference room

- 4034 AF 40370 40376 Kitchen
- 4034 AF 40370 40377 Rest room
- 4034 AF 40378 40378 Office area west
- 4034 AF 40379 40379 Office area east

There are no systems in this fire area which normally contain radioactive material.

Fire Detection and Suppression Features

- Fire detectors
- Hose station(s)
- Portable fire extinguishers

Smoke Control Features

The general area HVAC subsystem of the annex/auxiliary building non-radioactive ventilation system (VXS) servicing this fire area stops upon detection of smoke in the supply duct. Fire dampers close automatically on high temperature to isolate portions of this fire area. These actions control the spread of fire and smoke. Other VXS subsystems continue to provide ventilation to the unaffected fire areas. After the fire, an exhaust fan serving the change rooms, and rest rooms mounted on the roof over the fire area, is used to exhaust smoke to the atmosphere from the change rooms and rest rooms. Smoke from other areas may be exhausted using portable exhaust fans and flexible ductwork.

Fire zone 4034 AF 40311 is an exit corridor for the area and is protected with fire dampers on duct penetrations of the corridor envelope in accordance with the Uniform Building Code.

Fire Protection Adequacy Evaluation

A fire in this fire area is detected by a fire detector which produces an audible alarm locally and both visual and audible alarms in the main control room and the security central alarm station. The fire is extinguished manually using hose streams or portable extinguishers.

Combustible materials in this fire area are listed in Table 9A-3 and primarily consist of electrical cable insulation and ordinary combustible material such as wood and paper. Combustibles are relatively uniformly distributed throughout the fire area. This is a light hazard fire area and the rate of fire growth is expected to be slow. Minimum two-hour fire barriers are provided and the building exterior wall is not rated. Fire zones within this fire area are separated by walls as shown in Figure 9A-4. The walls of fire zone 4034 AF 40311 are rated for 1-hour in accordance with Uniform Building Code requirements for exit corridors.

The ventilation system does not contribute to the spread of the fire or smoke as described in the Smoke Control Features section above.

9A.3.4.15 Fire Area 4035 AF 01

This fire area is comprised of the following room(s):

Room No.	
40341	Ancillary diesel generator room

This annex building fire area contains two diesel generator sets and one fuel storage tank. There are no systems in this fire area which normally contain radioactive material.

Fire Detection and Suppression Features

- Automatic dry pipe sprinkler system
- Hose station(s)
- Portable fire extinguishers

Smoke Control Features

The mechanical equipment areas HVAC subsystem of the annex/auxiliary building non-radioactive ventilation system (VXS) servicing this fire area stops upon detection of smoke in the supply duct. Fire dampers close automatically on high temperature to isolate this fire area. Other VXS subsystems continue to provide ventilation to the unaffected fire areas. These actions control the spread of fire and smoke. After the fire, smoke is removed from this fire area by using portable exhaust fans and flexible ductwork.

Fire Protection Adequacy Evaluation

A fire in this area is detected through the operation of the automatic dry pipe sprinkler system which produces an audible alarm locally and both visual and audible alarms in the main control room and the security central alarm station. The fire is extinguished by the automatic dry pipe sprinkler system. Water from the sprinklers rapidly fills and cools the small diked area under the fuel oil storage tank. If necessary the fire can also be extinguished manually.

Combustible materials in this fire area are listed in Table 9A-3 and primarily consist of diesel fuel oil in the fuel oil storage tank. The tank is located in the southwest corner of the room. The remaining combustibles are relatively uniformly distributed throughout the fire area. This is an ordinary hazard fire area and the rate of heat release is expected to be moderate to high. Minimum three-hour fire barriers are provided and the building exterior wall is not rated.

The ventilation system does not contribute to the spread of the fire or smoke as described in the Smoke Control Features section above.

9A.3.4.16 Fire Area 4041 AF 01

This fire area is subdivided into the following fire zones:

Fire Zone	Room No.	
4041 AF 40403	40403	Control support area
4041 AF 40403	40404	Restroom
4041 AF 40403	40405	Rest area, kitchen
4041 AF 40403	40406	Conference room
4041 AF 40403	40407	Conference room
4041 AF 40403	40408	NRC room
4041 AF 40403	40409	Conference room
4041 AF 40410	40410	Computer room A
4041 AF 40410	40402	Corridor

There are no systems in this fire area which normally contain radioactive material.

Fire Detection and Suppression Features

- Fire detectors

- Hose station(s)
- Portable fire extinguishers

Smoke Control Features

Combination fire-smoke dampers in the main control room/control support area HVAC subsystem of the NI non-radioactive ventilation system (VBS) close automatically upon detection of smoke or on high temperature to isolate this fire area. The balance of this and other VBS subsystems continues to provide ventilation to the unaffected fire areas. This subsystem may be manually realigned to the once-through smoke exhaust ventilation mode to minimize the potential migration of smoke. If the exhaust fire-smoke damper for this fire area is operable, the damper may be reopened to further reduce the migration of smoke. After the fire, smoke is removed from this fire area by reopening the fire dampers and operating the ventilation system in the once-through ventilation mode.

Fire Protection Adequacy Evaluation

A fire in this fire area is detected by a fire detector which produces an audible alarm locally and both visual and audible alarms in the main control room and the security central alarm station. The fire is extinguished manually using hose streams or portable extinguishers.

Combustible materials in this fire area are listed in Table 9A-3 and primarily consist of electrical cable insulation and ordinary combustible material such as wood and paper. Combustibles are relatively uniformly distributed throughout the fire area. This is a light hazard fire area and the rate of fire growth is expected to be slow. Minimum two-hour fire barriers are provided and the building exterior wall is not rated. Fire zones within this fire area are separated by walls as shown in Figure 9A-4. The corridor walls of fire zone 4041 AF 40410 are rated for one-hour in accordance with Uniform Building Code requirements for exit corridors.

The ventilation system does not contribute to the spread of the fire or smoke as described in the Smoke Control Features section above.

9A.3.4.17 Fire Area 4041 AF 02

This fire area is comprised of the following room(s):

Room No.	
40400	Corridor
40401	Restroom

There are no systems in this fire area which normally contain radioactive material.

Fire Detection and Suppression Features

- Fire detectors
- Hose station(s)
- Portable fire extinguishers

Smoke Control Features

The equipment room HVAC subsystem of the annex/auxiliary building non-radioactive ventilation system (VXS) servicing this fire area stops upon detection of smoke in the supply duct. Fire dampers close automatically on high temperature to isolate this fire area. These actions control the spread of fire and smoke. Other VXS subsystems continue to provide ventilation to the unaffected fire areas. After the fire, smoke is removed from this fire area by reopening the fire dampers and operating the ventilation system in the smoke exhaust ventilation mode.

Fire Protection Adequacy Evaluation

A fire in this fire area is detected by a fire detector which produces an audible alarm locally and both visual and audible alarms in the main control room and the security central alarm station. The fire is extinguished manually using hose streams or portable extinguishers.

Combustible materials in this fire area are listed in Table 9A-3 and primarily consist of electrical cable insulation. There are cable concentrations near the ceiling in the southern half of the corridor. This is a light hazard fire area and the rate of fire growth is expected to be slow. Minimum two-hour fire barriers are provided.

The ventilation system does not contribute to the spread of the fire or smoke as described in the Smoke Control Features section above.

9A.3.4.18 Fire Area 4042 AF 01

This fire area is comprised of the following room(s):

Room No.	
40413	Electrical switchgear room 1 including vertical electrical chase from room 40413 to room 40350 (floor slab Elevation 100′-0″)

This annex building fire area contains the non-Class 1E switchgear for one train, and two motor generator sets and power cabinet. There are no systems in this fire area which normally contain radioactive material.

Fire Detection and Suppression Features

- Fire detectors
- Hose station(s)
- Portable fire extinguishers

Smoke Control Features

The switchgear room HVAC subsystem of the annex/auxiliary building non-radioactive ventilation system (VXS) servicing this fire area stops upon detection of smoke in the supply or return duct. Fire dampers in the system close automatically on high temperature to isolate this fire area. Other VXS subsystems continue to provide ventilation to the unaffected fire areas. After the fire, smoke is removed from this fire area by reopening the fire dampers and operating the ventilation system in the smoke exhaust ventilation mode.

Fire Protection Adequacy Evaluation

A fire in this fire area is detected by a fire detector which produces an audible alarm locally and both visual and audible alarms in the main control room and the security central alarm station. The fire is extinguished manually using hose streams or portable extinguishers.

Combustible materials in this fire area are listed in Table 9A-3 and primarily consist of electrical cable insulation within electrical equipment, cabinets, and raceways. There are cable concentrations near the ceiling and the exterior wall. This is a light hazard fire area and the rate of fire growth is expected to be slow. Minimum two-hour fire barriers provide adequate separation from adjacent fire areas. The building exterior wall is not rated.

The ventilation system does not contribute to the spread of the fire or smoke as described in the Smoke Control Features section above.

9A.3.4.19 Fire Area 4042 AF 02

This fire area is comprised of the following room(s):

Room No.	
40414	Electrical switchgear room 2

There are no systems in this fire area which normally contain radioactive material.

Fire Detection and Suppression Features

- Fire detectors
- Hose station(s)
- Portable fire extinguishers

Smoke Control Features

The switchgear room HVAC subsystem of the annex/auxiliary building non-radioactive ventilation system (VXS) servicing this fire area stops upon detection of smoke in the supply or return duct. Fire dampers in the system close automatically on high temperature to isolate this fire area. Other VXS subsystems continue to provide ventilation to the unaffected fire areas. After the fire, smoke is removed from this fire area by reopening the fire dampers and operating the ventilation system in the smoke exhaust ventilation mode.

Fire Protection Adequacy Evaluation

A fire in this fire area is detected by a fire detector which produces an audible alarm locally, and both visual and audible alarms in the main control room and the security central alarm station. The fire is extinguished manually using hose streams or portable extinguishers.

Combustible materials in this fire area are listed in Table 9A-3 and primarily consist of electrical cable insulation within electrical equipment, cabinets, and raceways. There are cable concentrations near the ceiling and the exterior wall. This is a light hazard fire area and the rate of fire growth is expected to be slow. Minimum two-hour fire barriers provide adequate separation from adjacent fire areas. The building exterior wall is not rated.

The ventilation system does not contribute to the spread of the fire or smoke as described in the Smoke Control Features section above.

9A.3.4.20 Fire Area 4051 AF 01

This fire area is comprised of the following room(s):

Room No.	
40500	North air handling equipment room
40501	Air intake plenum 1

There are no systems in this fire area which normally contain radioactive material.

Fire Detection and Suppression Features

- Fire detectors
- Hose station(s)
- Portable fire extinguishers

- Automatic wet pipe sprinklers (Room 40500 only)

Smoke Control Features

The equipment room HVAC subsystem of the annex/auxiliary building non-radioactive ventilation system (VXS) servicing this fire area stops upon detection of smoke in the supply or return duct. Fire dampers in the system close automatically on high temperature to isolate this fire area. Other VXS subsystems continue to provide ventilation to the unaffected fire areas. After the fire, smoke is removed from this fire area by using portable exhaust fans and flexible ductwork or by reopening the fire dampers and operating the ventilation system in the smoke exhaust mode if it is still functional.

Fire Protection Adequacy Evaluation

A fire in this fire area is detected by a fire detector which produces an audible alarm locally and both visual and audible alarms in the main control room and the security central alarm station. The fire is extinguished by operation of an automatic sprinkler or by manually using hose streams or portable extinguishers.

Combustible materials in this fire area are listed in Table 9A-3 and primarily consist of electrical cable insulation. There are cable concentrations along the west and south walls. This is a light hazard zone and the rate of fire growth is expected to be slow. Minimum two-hour fire barriers are provided and the exterior wall is not rated.

The ventilation systems contained in this fire area are equipped with fire dampers on their duct penetrations out of and into this fire area. The systems contained in this area are recirculating HVAC systems serving personnel and equipment areas in the annex building, and one train of HVAC equipment serving the main control room.

The ventilation system does not contribute to the spread of fire or smoke as described in the Smoke Control Features section above.

9A.3.4.21 Fire Area 4052 AF 01

This fire area contains the staging, storing, and assembly area for the containment. It also houses the exhaust fans for the health physics area and the containment air filtration exhaust units. The containment air filtration units remove radioactive halogens and particulates from the containment air prior to discharge to the atmosphere. Low levels of radioactive material may be present within the fire area during normal plant operation. This fire area is subdivided into the following fire zones:

Fire Zone	Room No.	
● 4052 AF 40550	40550	Staging and storage area
● 4052 AF 40551	40551	Containment air filtration exhaust room A
● 4052 AF 40552	40552	Containment air filtration exhaust room B

Fire Detection and Suppression Features

- Fire detectors
- Hose station(s)
- Portable fire extinguishers
- Automatic wet pipe sprinklers (Room 40550 only)

Smoke Control Features

The auxiliary/annex building subsystem of the radiologically controlled area ventilation system (VAS) servicing this fire area alarms in the main control room upon detection of smoke in the area or in the

supply or exhaust duct. The balance of the this and other VAS subsystems remain in operation unless plant operators determine that there is a need to manually shut down the subsystem. Fire dampers close automatically on high temperature to isolate this fire area. These actions control the spread of fire and smoke. After the fire, smoke is removed from this fire area by reopening the fire dampers. The ventilation exhaust system serving the area exhausts smoke to the atmosphere.

Fire Protection Adequacy Evaluation

A fire in this fire area is detected by a fire detector which produces an audible alarm locally and both visual and audible alarms in the main control room and the security central alarm station. The fire is extinguished by operation of an automatic sprinkler or manually using hose streams or portable extinguishers.

This fire area contains two charcoal adsorbers, located in the containment air filtration system exhaust units. The normal temperature of the air flowing through the charcoal adsorbers is well below 200°F, while the minimum charcoal ignition temperature is greater than 600°F. Two independent temperature sensors interface with the fire detection system, providing charcoal temperature indication, and high and high-high temperature alarms. The filtration unit fan trips at the high temperature alarm setpoint. The setpoints of both alarms are well below the charcoal ignition temperature, allowing the operator time to investigate and take corrective action. In the unlikely event of a fire in the adsorber, the filtration unit can be manually isolated. The adsorber deluge piping will be connected to a nearby hose station to cool the charcoal and extinguish the fire.

Combustible materials in this fire area are listed in Table 9A-3 and primarily consist of electrical cable insulation and charcoal. The charcoal is contained within the sheet metal housings of the containment air filtration system exhaust units. There are cable concentrations along the south and west walls of the fire area. This is a light hazard fire area and the rate of fire growth is expected to be slow. Minimum two-hour fire barriers are provided and the building exterior wall is not rated.

The ventilation system does not contribute to the spread of the fire or smoke as described in the Smoke Control Features section above.

9A.3.5 Radwaste Building

Figure 9A-5 identifies fire zones within the radwaste building fire area and illustrates the fire resistance of the fire area boundaries.

A fire in the radwaste building does not affect safe shutdown capability. A fire is confined to the fire area. The radwaste building fire area is separated from the safety-related areas of the nuclear island by a 3-hour fire barrier wall. The radwaste building is served by the dedicated radwaste building HVAC system. Closing of fire dampers in the ventilation system serving the radwaste building does not affect safe shutdown systems because the safe shutdown systems are served by other ventilation systems.

Neither a fire nor fire suppression activities in the radwaste building affect the safe shutdown capability of components located in other fire areas.

Floor drains are sized to handle water flow from fixed automatic fire protection systems without a significant accumulation of water in the fire area. Curbed areas within the radwaste building have sufficient capacity to retain fire protection water to prevent an unmonitored release to the environment.

No fire in the radwaste building can cause spurious actions which could cause a breach in the reactor coolant boundary or defeat safety related decay heat removal capability or cause an increase in shutdown reactivity of the reactor.

9A.3.5.1 Fire Area 5031 AF 01

The fire area is subdivided into the following fire zones:

Fire Zone	Room No.	
● 5031 AF 50300	50300	Electrical/mechanical equipment room
● 5031 AF 50350	50350	Mobile systems facility
● 5031 AF 50351	50351	Waste accumulation room
● 5031 AF 50352	50352	Packaged waste storage room
5031 AF 50353	50353	HVAC equipment room
5031 AF 50354	50354	Truck staging area
5031 AF 50355	50355	Monitor tanks room

Various radwaste processing and packaging operations are performed utilizing the mobile system facilities. Moderate quantities of radioactive materials are present in the fire area during all modes of plant operation.

Fire Detection and Suppression Features

- Fire detectors
- Preaction sprinklers (fire zones 5031 AF 50350, -50351, and -50352)
- Hose station(s)
- Portable fire extinguishers

Smoke Control Features

The radwaste building HVAC system (VRS) stops upon actuation of the fire suppression system in this fire area or if smoke is detected in the common supply duct from the air handling units. The VRS remains in operation and an alarm is sent to the main control room and the central alarm station if a fire is detected in the duct or if the suppression system is actuated. The plant operators will determine if there is a need to manually shut down the system. The fire damper to the plant vent closes automatically on high temperature to isolate this fire area. These actions control the spread of fire and smoke. After the fire, smoke is removed from the fire area and exhausted to atmosphere by reopening the fire damper and operating the ventilation system exhaust fans.

Fire Protection Adequacy Evaluation

A fire in this fire area is detected by a fire detector which produces an audible alarm locally and both visual and audible alarms in the main control room and the security central alarm station. The fire is extinguished by the preaction sprinkler system or manually, using hose streams or portable extinguishers.

Combustible materials in this fire area are listed in Table 9A-3 and primarily consist of electrical cable insulation and ordinary combustible materials such as cloth and trash. There are concentrations of combustibles in the waste accumulation room and potentially in the mobile systems facility. There are small concentrations of lubricants associated with equipment such as cask transporter vehicles. Diesel fuel may periodically be present when there is a truck present in the truck staging area. Depending upon the processes being performed in the mobile systems facility, the locations of combustible concentrations may change. This is a light hazard fire area and the rate of fire growth is expected to be slow. Minimum three-hour barriers are provided and the building exterior wall is not rated. An automatic suppression system is provided due to the localized areas of high combustible loading. This system provides confidence that the fire will be promptly extinguished, thus minimizing the potential for release of radioactivity and the radiation exposure of firefighters.

The ventilation system does not contribute to the spread of the fire or smoke as described in the Smoke Control Features section above.

9A.3.6 Diesel Generator Building

Figure 9A-5 identifies fire areas and fire zones within the diesel generator building and illustrates the fire resistance of the fire area boundaries.

A fire in the diesel generator building does not affect safe shutdown capability. The diesel generator building is not adjacent to any building or area containing safety-related equipment. The diesel generator building heating and ventilation system is dedicated to the diesel generator building and independent of other ventilation systems.

Neither a fire nor fire suppression activities in the diesel generator building fire areas affect the safe shutdown capability of components located in other fire areas.

Floor drains are sized to handle low water flow rates. Water from fixed automatic fire protection systems flows out of the building through opened doors. Flooding of components required for safe shutdown is not a concern because there are no safe shutdown components in the diesel generator building.

No fire in the diesel building can cause spurious actions which could cause a breach in the reactor coolant boundary or defeat safety related decay heat removal capability or cause an increase in shutdown reactivity of the reactor.

9A.3.6.1 Fire Area 6030 AF 01

This fire area contains the diesel generator and supporting equipment for one train of the onsite standby ac power system. The fire area is subdivided into the following fire zones:

Fire Zone	Room No.	
● 6030 AF 60310	60310	Diesel generator room A
● 6030 AF 60311	60311	Service module A
● 6030 AF 60313	60313	Combustion air cleaner area A

There are no systems in this fire area which normally contain radioactive material.

Fire Detection and Suppression Features

- Fire detectors in the service module
- Dry pipe sprinklers in the diesel generator room
- Hose station(s)
- Portable fire extinguishers (including carbon dioxide)

Smoke Control Features

The diesel generator building ventilation system (VZS) serves this fire area by means of the engine room air handling unit, the service module air handling unit, and the standby exhaust fans. The engine room air handling unit stops upon actuation of the fire suppression system in the fire area or if smoke is detected in the supply air duct from the air handling unit. The service module air handling unit stops upon actuation of the fire suppression system in the fire area or if smoke is detected in the supply air duct from the air handling unit. The standby exhaust fans stop upon actuation of the fire suppression system in the fire area. These actions control the spread of fire and smoke. After the fire, smoke is removed from the fire area by manually turning on the ventilation exhaust fans mounted on

the roof over the fire area, or by opening the roll-up door and personnel doors and utilizing portable exhaust fans.

Fire Protection Adequacy Evaluation

A fire in the diesel generator room is detected through the operation of the dry pipe sprinkler system which produces an audible alarm locally and both visual and audible alarms in the main control room and security central alarm station. A fire in the service module is detected by a fire detector which produces an audible alarm locally and both visual and audible alarms in the main control room and the security central alarm station. A fire in the diesel generator room is extinguished by the automatic fire suppression system or manually, using hose streams or portable extinguishers. A fire in the service module is extinguished manually using hose streams or portable extinguishers.

The area under the diesel generator is shielded from direct impingement of the spray from the dry pipe sprinkler system, but water accumulating on the floor will find its way into this space. The area under the diesel generator is also accessible for manual firefighting. The roll-up door permits access to this space for manual hose streams from outside the building.

Combustible materials in this fire area are listed in Table 9A-3 and primarily consist of electrical cable insulation, lube oil and fuel oil. Combustibles concentrations occur at the diesel generator equipment and in the service module. This is an ordinary hazard fire area and the rate of heat release is expected to be moderate to high. Minimum three-hour fire barriers are provided and the building exterior walls are not rated.

The ventilation system does not contribute to the spread of the fire or smoke as described in the Smoke Control Features section above.

9A.3.6.2 Fire Area 6030 AF 02

This fire area contains the diesel generator and supporting equipment for one train of the onsite standby ac power system, tool storage area and security room. The fire area is subdivided into the following fire zones:

Fire Zone	Room No.	
● 6030 AF 60320	60320	Diesel generator room B
● 6030 AF 60321	60321	Service module B
● 6030 AF 60323	60323	Combustion air cleaner area B
● 6030 AF 60324	60324	Tool storage room
● 6030 AF 60330	60330	Security room

There are no systems in this fire area which normally contain radioactive material.

Fire Detection and Suppression Features

- Fire detectors in the service module
- Dry pipe sprinklers in the diesel generator room
- Hose station(s)
- Portable fire extinguishers (including carbon dioxide)

Smoke Control Features

The diesel generator building ventilation system (VZS) serves this fire area by means of the engine room air handling unit, the service module air handling unit, and the standby exhaust fans. The

engine room air handling unit stops upon actuation of the fire suppression system in the fire area or if smoke is detected in the supply air duct from the air handling unit. The service module air handling unit stops upon actuation of the fire suppression system in the fire area or if smoke is detected in the supply air duct from the air handling unit. The standby exhaust fans stop upon actuation of the fire suppression system in the fire area. These actions control the spread of fire and smoke. After the fire, smoke is removed from the fire area by manually turning on the ventilation exhaust fans mounted on the roof over the fire area, or by opening the roll-up door and personnel doors and utilizing portable exhaust fans.

Fire Protection Adequacy Evaluation

A fire in the diesel generator room is detected through the operation of the dry pipe sprinkler system which produces an audible alarm locally, and both visual and audible alarms in the main control room and security central alarm station. A fire in the service module is detected by a fire detector which produces an audible alarm locally and both visual and audible alarms in the main control room and the security central alarm station. A fire in the diesel generator room is extinguished by the automatic fire suppression system or manually, using hose streams or portable extinguishers. A fire in the service module is extinguished manually using hose streams or portable extinguishers.

The area under the diesel generator is shielded from direct impingement of the spray from the dry pipe sprinkler system, but water accumulating on the floor will find its way into this space. The area under the diesel generator is also accessible for manual firefighting. The roll-up door permits access to this space for manual hose streams from outside the building.

Combustible materials in this fire area are listed in Table 9A-3 and primarily consist of electrical cable insulation, lube oil and fuel oil. Combustibles concentrations occur at the diesel generator equipment and in the service module. This is an ordinary hazard fire area and the rate of heat release is expected to be moderate to high. Minimum three-hour fire barriers are provided and the building exterior walls are not rated.

The ventilation system does not contribute to the spread of the fire or smoke as described in the Smoke Control Features section above.

9A.3.6.3 Fire Area 6030 AF 03

This fire area is comprised of the following room(s):

Room No.	
60312	Diesel fuel day tank vault A

This fire area contains the fuel oil day tank for one train of the onsite standby ac power diesel generator. There are no systems in this fire area which normally contain radioactive material.

Fire Detection and Suppression Features

- Dry pipe sprinklers
- Hose station(s)
- Portable fire extinguishers

Smoke Control Features

Fire dampers in the diesel generator building ventilation system (VZS) close automatically on high temperature to isolate this fire area. The tank vault exhaust fan stops upon actuation of the fire suppression system in this fire area. These actions control the spread of fire and smoke. After the fire, smoke is removed from the fire area using portable exhaust fans and flexible ductwork.

Fire Protection Adequacy Evaluation

A fire in this fire area is detected through the operation of the dry pipe sprinkler system which produces an audible alarm locally and both visual and audible alarms in the main control room and the security central alarm station. The fire is extinguished by the automatic dry pipe sprinkler system. Water from the sprinklers rapidly fills and cools the small diked area under the tank. If necessary, the fire can also be extinguished manually.

Combustible materials in this fire area are listed in Table 9A-3 and primarily consist of diesel fuel oil in the oil storage tank. Due to the small vault size and the size of the storage tank, the combustible loading is uniform throughout the fire area. This is an ordinary hazard fire area and the rate of heat release is expected to be high. Minimum three-hour fire barriers are provided.

The ventilation system does not contribute to the spread of the fire or smoke as described in the Smoke Control Features section above.

9A.3.6.4 Fire Area 6030 AF 04

This fire area is comprised of the following room(s):

Room No.	
60322	Diesel fuel day tank vault B

This fire area contains the fuel oil day tank for one train of the onsite standby ac power diesel generator. There are no systems in this fire area which normally contain radioactive material.

Fire Detection and Suppression Features

- Dry pipe sprinklers
- Hose station(s)
- Portable fire extinguishers

Smoke Control Features

Fire dampers in the diesel generator building ventilation system (VZS) close automatically on high temperature to isolate this fire area. The tank vault exhaust fan stops upon actuation of the fire suppression system in this fire area. These actions control the spread of fire and smoke. After the fire, smoke is removed from the fire area using portable exhaust fans and flexible ductwork.

Fire Protection Adequacy Evaluation

A fire in this fire area is detected through the operation of the dry pipe sprinkler system which produces an audible alarm locally and both visual and audible alarms in the main control room and the security central alarm station. The fire is extinguished by the automatic dry pipe sprinkler system. Water from the sprinklers rapidly fills and cools the small diked area under the tank. If necessary, the fire can also be extinguished manually.

Combustible materials in this fire area are listed in Table 9A-3 and primarily consist of diesel fuel oil in the oil storage tank. Due to the small vault size and the size of the storage tank, the combustible loading is uniform throughout the fire area. This is an ordinary hazard fire area and the rate of heat release is expected to be high. Minimum three-hour fire barriers are provided.

The ventilation system does not contribute to the spread of the fire or smoke as described in the Smoke Control Features section above.

9A.3.6.5 Fire Area 6001 AF 01

This fire area is comprised of the following rooms:

Room No.	
S01	Stairwell

Three of the four walls of the stairwell enclosure are required to be 2 hour fire rated walls. The east wall of this enclosure faces the yard area; therefore, it does not require a 2 hour fire rating. These 2 hour fire rated walls are nonstructural walls made of a concrete/steel composite material. The quantity of combustible materials in the stairwell is negligible and no fire is postulated in this fire area. NFPA Class I hose connections are provided in the stairwell for use in fighting fires in other fire areas.

9A.3.7 Special Topics

9A.3.7.1 Evaluation of Spurious Actuation

The potential for spurious actuation of equipment as a result of fire damage to electrical circuits is considered for each fire area containing safety-related equipment. As discussed in Subsection 9A.2.7.1, an assessment of multiple/simultaneous spurious actuations or signals resulting from the fire was performed (Reference 6) with the conclusion that either spurious actuations do not occur, or the consequences are such that safe shutdown can still be achieved. Principal spurious actuation are discussed below. In no case does the spurious actuation of equipment prevent safe shutdown.

9A.3.7.1.1 High-Low Pressure Interfaces

NRC Generic Letter 81-12 requests the identification and evaluation of high-low pressure interfaces between the reactor coolant system and interfacing systems such as the normal residual heat removal system. Per the Generic Letter, these interfaces typically contain two redundant and independent motor-operated valves in series. On a typical pressurized water reactor plant, these two valves and their control and power cables may be subject to a single fire. Potential high-low pressure system interfaces of particular interest are discussed below.

Reactor Coolant System Valve Actuation

NRC Generic Letter 81-12 specifically addresses the reactor coolant/residual heat removal system interface on pressurized water reactors. For AP1000, the reactor coolant system to normal residual heat removal system interface is similar to the typical pressurized water reactor configuration. However, the normal residual heat removal system is not a safety-related system and is not required for safe shutdown. To preclude the spurious opening of the interface valves as a result of a fire, the power to the valves is locked out during power operations. Thus, spurious actuation of the reactor coolant system to normal residual heat removal system interface valves does not occur and the safe shutdown capability is not affected.

Automatic Depressurization System Valve Actuation

The automatic depressurization system valves are not considered to be high-low pressure interface valves when postulating spurious actuation following a fire. The safety issue related to high-low pressure interfaces is expressed in NRC Generic Letter 81-12. The concern is that the spurious opening of two or more isolation valves which form the boundary between the reactor coolant system and a low pressure system could lead to damage to the low pressure system and a loss of coolant outside the containment. Since automatic depressurization system valve actuation cannot damage a low pressure system, and since the system is entirely within containment, the automatic

depressurization valves do not represent a high-low pressure interface as described in NRC Generic Letter 81-12.

Spurious actuation of automatic depressurization system stage 4 squib valves is prevented by the use of a squib valve controller circuit which requires multiple hot shorts for actuation, physical separation of potential hot short locations, and provisions for operator action to remove power from the fire zone. No postulated fire can spread to the hot short locations before the operator can remove power from the fire zone.

Automatic depressurization system stages 1, 2, and 3 consist of parallel paths, each path having two motor-operated valves in series. Spurious stage 1, 2, or 3 actuation is prevented by the use of physical separation of control circuits for the two series valves and provisions for operator action to remove power from the fire zone. No postulated fire can spread to the hot short locations before the operator can remove power from the fire zone.

Reactor Coolant System Reactor Vessel Head Vent Valve Actuation

The reactor vessel head vent valves are connected to the reactor vessel head and discharge to the IRWST. The head vent valves are not required to operate following a fire. There are four head vent valves arranged in two flow paths with two series valves in each path. The head vent valves are fail-closed dc powered solenoid valves, and each valve is powered by a separate, safety-related power supply as shown on Table 9A-2. In the event that a spurious signal was to open a head vent valve, the flow path is blocked by the closed series head vent valve. The cables for the control of one head vent valve in each flow path is enclosed in steel conduit up to the valve to prevent a fire inside containment from spuriously actuating two head vent valves in one flow path. Therefore, a single fire is not postulated to result in an uncontrolled LOCA.

The head vent valves are controlled from switches mounted on the primary and secondary dedicated safety panels in the control room. Each safety panel contains a switch for controlling each head vent valve (4 switches per panel). Each switch is a three-position, hold-in-position switch (open-neutral-close). If both switches are in the neutral position, soft control of the valve from the primary dedicated safety panel is allowed. If both switches are in the open position the valve will open. Either switch in the close position will close the valve. If one switch is in neutral position and one in the open position, the valve will hold its previous position but soft control is defeated. During a fire, switches on one panel may be shorted but none of the head vent valves will be opened because the switches on the other panel will be deactivated before the fire shorts them.

9A.3.7.1.2 Other Spurious Actuation

Principal spurious actuation not involving high-low pressure interfaces is discussed below.

Passive Core Cooling System Passive Residual Heat Removal Heat Exchanger Inlet Valve Actuation

One normally open valve is provided to isolate the inlet line to the passive residual heat removal heat exchanger. To preclude the spurious closing of the inlet valve as a result of a fire, the power to the valve is locked out during power operations. Thus, spurious closing of the passive core cooling passive residual heat removal heat exchanger inlet valve does not occur and the safe shutdown capability is not affected.

Passive Containment Cooling System Valve Actuation

Two valves in series isolate each of the three discharge flow paths from the passive containment cooling system storage tank. For purposes of system reliability, one valve in each flow path is normally open and the other is normally closed. Electrical division assignments are shown in Table 9A-2.

Spurious actuation of one of these valves is assumed to occur where a fire affects its electrical circuitry. Such a fire can occur in the main control room, an electrical equipment fire area, in the passive containment cooling system valve room, or in fire areas or fire zones through which the applicable electrical cables are routed.

Spurious actuation of one of these valves causes a passive containment cooling system flow path to be disabled or inadvertently opened, depending on which valve is affected. If a normally closed valve spuriously opens, passive containment cooling system water delivery from that flow path will be initiated which does not adversely affect the capability to achieve and maintain safe shutdown. If one of the normally open valves were spuriously closed to prevent passive containment cooling system water delivery through that flow path when called upon during the safe shutdown process, the redundant passive containment cooling system water delivery flow paths would be sufficient to achieve and maintain safe shutdown.

Containment Isolation Valve Actuation

Spurious actuation of a containment isolation valve is assumed to occur where a fire affects its electrical circuitry. Each containment penetration has redundant means of containment isolation.

Reactor Trip Switchgear

The reactor trip switchgear receives signals from each of the four Class 1E electrical divisions. The signals are de-energized to trip. Also, two out of four signals are required to trip. There are two redundant sets of trip switchgear in separate fire areas. There is no single spurious signal which could prevent the reactor from being tripped.

Reactor Coolant Pump Trip Switchgear

There are two redundant sets of reactor coolant pump trip switchgear in separate fire areas. One is controlled from division B; the other from division C. Thus, a spurious signal in either train will not prevent trip of the reactor coolant pumps.

9A.3.7.2 Protection of Accident Mitigation Equipment

Based on the guidance in BTP CMEB 9.5-1, redundant trains of safety-related equipment used to mitigate the consequences of a design basis accident (but not required for safe shutdown following a fire) are separated so that a fire within one train will not damage the redundant train. Both trains are permitted to be damaged by a single exposure fire.

Either diverse methods of performing the accident mitigation function or adequate separation is provided.

9A.4 References

1. NUREG-0800, U. S. Nuclear Regulatory Commission Standard Review Plan, Subsection 9.5.1, “Fire Protection Program,” Revision 3, July 1981, including Branch Technical Position (BTP) CMEB 9.5-1, "Guidelines for Fire Protection for Nuclear Power Plants," Revision 2, July 1981.

2. Fire Protection Handbook, Edited by A. E. Cote, National Fire Protection Association, 16th edition.

3. NRC Generic Letter 81-12, February 20, 1981.

4. NFPA 92A-2000, “Recommended Practice for Smoke Control Systems.”

5. Fire Protection Handbook, National Fire Protection Association, 18th edition.

6. APP-FPS-G1R-002, Revision 1, “AP1000 Fire Induced Multiple Spurious Actuation Report.”

201. American Society of Mechanical Engineers, “Standard Test Methods for Fire Tests of Building Construction and Materials,” ASTM E119-08a.

202. National Fire Protection Association, “Standard Methods of Tests of Fire Endurance of Building Construction and Materials,” NFPA 251, 2006.

Table 9A-1
Heat of Combustion Values

Material	Units	Heat of Combustion Btu/Unit
Acetylene	Pounds	21,500
Alcohol (Ethyl)	Gallons	84,100
Alcohol (Methyl)	Gallons	64,800
Batteries (cases, Note 1)	Cells	200,000
Cable Insulation	Pounds	10,200
Charcoal	Pounds	14,600
Cloth (cotton)	Pounds	8,000
Fuel Oil	Gallons	144,000
Gasoline	Gallons	128,000
Hydrogen	Pounds	61,000
Lube Oil	Gallons	151,000
Lubricant	Pounds	19,800
Methane	Pounds	23,900
Paper	Pounds	7,700
Plastic	Pounds	13,200
Propane	Pounds	21,700
Rubber	Pounds	12,200
Trash	Pounds	7,700
Volatiles (Note 2)	Gallons	136,000
Wood	Pounds	8,400

Notes:
1. Heat of combustion value depends on equipment selection.
2. Miscellaneous volatile liquids such as kerosene and toluene.

Table 9A-2 (Sheet 1 of 14)
Safe Shutdown Components

Fire Area/ Fire Zone	System	Description	Class 1E Division			
			A	C	B	D
1000 AF 01/ 1100 AF 11105	RCS	Reactor Vessel (MV-01)				
	RXS	Source Range Excore Detectors	NE-001A	NE-001C	NE-001B	NE-001D
		Intermediate Range Excore Detectors	NE-002A	NE-002C	NE-002B	NE-002D
		Power Range Excore Detectors (Lower)	NE-003A	NE-003C	NE-003B	NE-003D
		Power Range Excore Detectors (Upper)	NE-004A	NE-004C	NE-004B	NE-004D
1000 AF 01/ 1100 AF 11204		None				
1000 AF 01/ 1100 AF 11206	PXS	Core Makeup Tank A Discharge Isolation Valve			V015A	V014A
	SFS	Suction Line Containment Isolation Valve			V034	
1000 AF 01/ 1100 AF 11207		Core Makeup Tank B Discharge Isolation Valve	V015B	V014B		
1000 AF01/ 1100 AF 11208	RNS	Suction from IRWST Cont. Isolation Valve			V023	
		Return from CVS Cont. Isolation Valve			V061	

Table 9A-2 (Sheet 2 of 14)
Safe Shutdown Components

Fire Area/ Fire Zone	System	Description	Class 1E Division			
			A	C	B	D
1000 AF 01/ 1100 AF 11300A	PSS	Containment Air Sample Cont. Isolation Valve			V008	
		Liquid Sample Line Cont. Isolation Valve			V010A	V010B
	RCS	Hot Leg 2 Flow			FT-102B	FT-102D
	VFS	Containment Purge Discharge Cont. Isolation Valve				V009
	VFS	Containment Purge Inlet Cont. Isolation Valve				V004
	PXS	IRWST Level			LT-046	LT-048
		IRWST Gutter Isolation Valve			V130A	V130B
		Core Makeup Tank (MT-02A)				
	SGS	Steam Generator 2 Wide Range Level			LT-014	LT-018
1000 AF 01/ 1100 AF 11300B	CCS	Outlet Line Cont. Isolation Valve	V207			
	CVS	Letdown Containment Isolation Valve	V045			
		Makeup Line Cont. Isolation Valve	V091			
		RCS Purification Stop Valve (RCPB)	V001	V002		

Table 9A-2 (Sheet 3 of 14)
Safe Shutdown Components

Fire Area/ Fire Zone	System	Description	Class 1E Division			
			A	C	B	D
1000 AF 01/ 1100 AF 11300B	IDS	Class 1E Electrical Penetrations	EY-P11Z	EY-P27Z		
		Class 1E Electrical Penetrations	EY-P12Y	EY-P29Y		
		Class 1E Electrical Penetrations	EY-P13Y	EY-P28Y		
		Class 1E Cable Trays	Note 1	Note 1		
	PXS	PRHR Heat Exchanger Control Valve		V108B	V108A	
		IRWST Level	LT-045	LT-047		
		Core Makeup Tank (MT-02B)				
	RCS	Pressurizer Pressure	PT-191A	PT-191C		
		Reference Leg Temperature	TE-193A	TE-193C		
		Pressurizer Level	LT-195A	LT-195C		
		PRHR Heat Exchanger Outlet Temperature		TE-161		
		Hot Leg 1 Flow	FT-101A	FT-101C		
		Hot Leg 2 Flow	FT-102A	FT-102C		
		Hot Leg 1 Wide Range Pressure	PT-140A	PT-140C		
	SGS	Steam Generator 1 Narrow Range Level	LT-001	LT-003		
		Steam Generator 2 Narrow Range Level	LT-005	LT-007		
		Steam Generator 2 Wide Range Level	LT-013	LT-017		

Table 9A-2 (Sheet 4 of 14)
Safe Shutdown Components

Fire Area/ Fire Zone	System	Description	Class 1E Division			
			A	C	B	D
1000 AF 01/ 1100 AF 11300B	SGS	Steam Generator 1 Wide Range Level	LT-011	LT-015		
		SG1 Steam Line Pressure	PT-030	PT-032		
		SG2 Steam Line Pressure	PT-034	PT-036		
	WLS	Sump Discharge Cont. Isolation Valve	V055			
		RCDT Gas Outlet Cont. Isolation Valve	V067			
1000 AF 01/ 1100 AF 11301	RCS	Reactor Head Vent Valve	V150A	V150C	V150B	V150D
		RCP 1A Bearing Water Temperature	TE-211A	TE-211C	TE-211B	TE-211D
		RCP 1B Bearing Water Temperature	TE-212A	TE-212C	TE-212B	TE-212D
		Cold Leg 1A Temperature (Narrow Range)	TE-121A			TE-121D
		Cold Leg 1B Temperature (Narrow Range)		TE-121C	TE-121B	
		Cold Leg 1A Temperature (Wide Range)	TE-125A			
		Cold Leg 1B Temperature (Wide Range)		TE-125C		
		Hot Leg 1 Temperature (Narrow Range)	TE-131A	TE-131C		
		Hot Leg 1 Temperature (Narrow Range)	TE-132A	TE-132C		
		Hot Leg 1 Temperature (Narrow Range)	TE-133A	TE-133C		

Table 9A-2 (Sheet 5 of 14)
Safe Shutdown Components

Fire Area/ Fire Zone	System	Description	Class 1E Division			
			A	C	B	D
1000 AF 01/ 1100 AF 11301	RCS	Hot Leg 1 Temperature (Wide Range)		TE-135A		
		Reference Leg Temperature			TE-193B	TE-193D
		RCP Shaft Speed	ST-281	ST-282		
		Hot Leg 1 Flow			FT-101B	FT-101D
	SGS	Steam Generator 1 Wide Range Level			LT-012	LT-016
1000 AF 01/ 1100 AF 11302	RCS	RCP 2A Bearing Water Temperature	TE-213A	TE-213C	TE-213B	TE-213D
		RCP 2B Bearing Water Temperature	TE-214A	TE-214C	TE-214B	TE-214D
		Cold Leg 2B Temperature (Narrow Range)	TE-122A			TE-122D
		Cold Leg 2A Temperature (Narrow Range)		TE-122C	TE-122B	
		Cold Leg 2A Temperature (Wide Range)			TE-125B	
		Cold Leg 2B Temperature (Wide Range)				TE-125D
		Hot Leg 2 Temperature (Narrow Range)			TE-131B	TE-131D
		Hot Leg 2 Temperature (Narrow Range)			TE-132B	TE-132D
		Hot Leg 2 Temperature (Narrow Range)			TE-133B	TE-133D
		Hot Leg 2 Temperature (Wide Range)			TE-135B	
		RCP Shaft Speed			ST-283	ST-284

Table 9A-2 (Sheet 6 of 14)
Safe Shutdown Components

Fire Area/ Fire Zone	System	Description	Class 1E Division			
			A	C	B	D
1000 AF 01/ 1100 AF 11500	IDS	Class 1E Cable Trays			Note 1	Note 1
		Class 1E Electrical Penetrations			EY-P30Z	EY-P14Z
		Class 1E Electrical Penetrations			EY-P31Y	EY-P15Y
		Class 1E Electrical Penetrations			EY-P32Y	EY-P16Y
	IIS	Core Exit Temperature		TE-002	TE-001	
		Core Exit Temperature		TE-004	TE-003	
		Core Exit Temperature		TE-005	TE-006	
		Core Exit Temperature		TE-007	TE-008	
		Core Exit Temperature		TE-010	TE-011	
		Core Exit Temperature		TE-012	TE-015	
		Core Exit Temperature		TE-014	TE-016	
		Core Exit Temperature		TE-017	TE-020	
		Core Exit Temperature		TE-018	TE-021	
		Core Exit Temperature		TE-019	TE-024	
		Core Exit Temperature		TE-022	TE-025	
		Core Exit Temperature		TE-023	TE-026	
		Core Exit Temperature		TE-027	TE-029	
		Core Exit Temperature		TE-028	TE-031	
		Core Exit Temperature		TE-032	TE-033	
		Core Exit Temperature		TE-035	TE-036	
		Core Exit Temperature		TE-037	TE-038	
		Core Exit Temperature		TE-040	TE-039	
		Core Exit Temperature		TE-042	TE-041	

Table 9A-2 (Sheet 7 of 14)
Safe Shutdown Components

Fire Area/ Fire Zone	System	Description	Class 1E Division			
			A	C	B	D
1000 AF 01/ 1100 AF 11500	SGS	Steam Generator 1 Narrow Range Level			LT-002	LT-004
		Steam Generator 2 Narrow Range Level			LT-006	LT-008
	VWS	Fan Coolers Return Cont. Isolation Valve			V082	
	RCS	Hot Leg 2 Wide Range Pressure			PT-140B	PT-140D
		Pressurizer Pressure			PT-191B	PT-191D
		Pressurizer Level			LT-195B	LT-195D
1000 AF 01/ 1200 AF 12341	PCS	Containment Pressure			PT-006	PT-008
1000 AF 01/ 1200 AF 12541	IDS	Class 1E Cables		Note 1	Note 1	
1000 AF 01/ 1270 AF 12701	IDS	Class 1E Cables		Note 1	Note 1	
	PCS	PCCWST Isolation Valve	V001A	V001C	V001B	
		PCCWST Series Isolation Valve	V002A	V002C	V002B	
		PCS Water Delivery Flow		FT-001	FT-002	
		PCS Water Delivery Flow			FT-003	
		PCS Storage Tank Level		LT-010	LT-011	
1200 AF 01	IDS	Class 1E Cable Trays	Note 1	Note 1		
	SFS	Suction Line Cont. Isolation Valve	V035			
	VFS	Containment Purge Inlet Cont. Isolation Valve	V003			

Table 9A-2 (Sheet 8 of 14)
Safe Shutdown Components

Fire Area/ Fire Zone	System	Description	Class 1E Division			
			A	C	B	D
1200 AF 01	PSS	Liquid Sample Line Cont. Isolation Valve	V011			
		Sample Return Line Cont. Isolation Valve	V023			
		Air Sample Line Cont. Isolation Valve	V046			
	SFS	Discharge Line Cont. Isol. Valve	V038			
	VFS	Containment Purge Discharge Cont. Isolation Valve	V010			
	VFS	Vacuum Relief Containment Isolation Valve	V800A	V800B		
	RNS	Discharge Cont. Isolation Valve	V011			
		Suction Header Cont. Isolation Valve	V022			
	PCS	Containment Pressure	PT-005	PT-007		
1200 AF 03	IDS	Class 1E Cable Trays			Note 1	Note 1
1201 AF 02	IDSB	24 Hr Battery 1A			DB-1A	
		24 Hr Battery 1B			DB-1B	
		72 Hr Battery 2A			DB-2A	
		72 Hr Battery 2B			DB-2B	
		250 Vdc Distribution Panel			DD-1	
		208/120 Vac Distribution Panel			EA-1	
		208/120 Vac Distribution Panel			EA-2	
		208/120 Vac Distribution Panel			EA-3	
		250 Vdc Switchboard			DS-1	

Table 9A-2 (Sheet 9 of 14)
Safe Shutdown Components

Fire Area/ Fire Zone	System	Description	Class 1E Division			
			A	C	B	D
1201 AF 02		250 Vdc Switchboard			DS-2	
		208/120 Vac Inverter			DU-1	
		208/120 Vac Inverter			DU-2	
		Regulating Transformer			DT-1	
		Battery Charger			DC-1	
		Battery Charger			DC-2	
		Voltage to Class 1E Battery Charger			--- 002	
		Voltage to Class 1E Battery Charger			--- 006	
	PMS	Protection and Safety Monitoring System Cabinets				
	IDSB	Electrical Penetration			EY-P32Y	
		250 Vdc MCC			DK-1	
		Electrical Penetration			EY-P30Z	
		Electrical Penetration			EY-P31Y	
1201 AF 03	IDSD	Battery 1A				DB-1A
		Battery 1B				DB-1B
		250 Vdc Distribution Panel				DD-1
		208/120 Vac Distribution Panel				EA-1
		208/120 Vac Distribution Panel				EA-2
		250 Vdc Switchboard				DS-1
		208/120 Vac Inverter				DU-1
		Regulating Transformer				DT-1
		Battery Charger				DC-1
		Voltage to Class 1E Battery Charger				--- 004
		Voltage to Class 1E Battery Charger				--- 008
	PMS	Protection and Safety Monitoring System Cabinets				

Table 9A-2 (Sheet 10 of 14)
Safe Shutdown Components

Fire Area/ Fire Zone	System	Description	Class 1E Division			
			A	C	B	D
1201 AF 03	IDSD	250 Vdc MCC				DK-1
		Electrical Penetration				EY-P14Z
		Electrical Penetration				EY-P15Y
		Electrical Penetration				EY-P16Z
1201 AF 04	IDS	Class 1E Cable Trays				Note 1
	CAS	Instrument Air Supply Cont. Isolation Valve				V014
	CCS	Inlet Line Cont. Isolation Valve				V200
	CCS	Outlet Line Cont. Isolation Valve				V208
	PXS	Nitrogen Supply Cont. Isolation Valve				V042
	VWS	Fan Coolers Supply Cont. Isolation Valve				V058
		Fan Coolers Return Cont. Isolation Valve				V086
	SGS	SG 1 Steam Line Pressure			PT-031	PT-033
		SG 1 Startup Feedwater Flow			FT-055A	FT-055B
		SG 2 Steam Line Pressure			PT-035	PT-037
		SG 2 Startup Feedwater Flow			FT-056A	FT-056B
1201 AF 05	CVS	Hydrogen Addition Cont. Isolation Valve				V092
	SGS	Steam Gen. Blowdown Cont. Isolation Valve			V075A	V074A
		Steam Gen. Blowdown Cont. Isolation Valve			V074B	V075B

Table 9A-2 (Sheet 11 of 14)
Safe Shutdown Components

Fire Area/ Fire Zone	System	Description	Class 1E Division			
			A	C	B	D
1201 AF 05		PORV and Block Valve-SG 1 Cont. Isolation Valves			V027A	V233A
		Steam Line Cond. Drain Cont. Isolation Valve				V036A
		Main Steam Line Cont. Isolation Valve			V040A	V040A
		Startup Feedwater Cont. Isolation Valve				V067A
		Main Steam Line Cond. Drain Control Valve			V086A	
		MSIV Bypass Cont. Isolation Valve			V240A	V240A
1201 AF 06	SGS	PORV and Block Valve SG 2 Cont. Isolation Valve			V233B	V027B
		Steam Line Cond. Drain Cont. Isolation Valve				V036B
		Main Steam Line Cont. Isolation Valve			V040B	V040B
		Main Feedwater Cont. Isolation Valve			V057B	V057B
		Startup Feedwater Cont. Isolation Valve			V067B	
		Steam Line Cond. Drain Control Valve			V086B	
		MSIV Bypass Cont. Isolation Valve			V240B	V240B
1202 AF 03	IDSC	24 Hr Battery 1A		DB-1A		
		24 Hr Battery 1B		DB-1B		
		72 Hr Battery 2A		DB-2A		
		72 Hr Battery 2B		DB-2B		
		250 Vdc Distribution Panel		DD-1		

Table 9A-2 (Sheet 12 of 14)
Safe Shutdown Components

Fire Area/ Fire Zone	System	Description	Class 1E Division			
			A	C	B	D
1202 AF 03	IDSC	208/120 Vac Distribution Panel		EA-1		
		208/120 Vac Distribution Panel		EA-2		
		208/120 Vac Distribution Panel		EA-3		
		250 Vdc Switchboard		DS-1		
		250 Vdc Switchboard		DS-2		
		208/120 Vac Inverter		DU-1		
		208/120 Vac Inverter		DU-2		
		Regulating Transformer		DT-1		
		Battery Charger		DC-1		
		Battery Charger		DC-2		
		Voltage to Class 1E Battery Charger		---003		
		Voltage to Class 1E Battery Charger		---007		
	PMS	Protection and Safety Monitoring System Cabinets				
	ECS	6900V RCP 1A Switchgear		ES-31		
		6900V RCP 2A Switchgear		ES-51		
		6900V RCP 1B Switchgear		ES-41		
		6900V RCP 2B Switchgear		ES-61		
	IDSC	Electrical Penetration		EY-P27Z		
		Electrical Penetration		EY-P29Y		
		Electrical Penetration		EY-P28Y		
		250 Vdc MCC		DK-1		

Table 9A-2 (Sheet 13 of 14)
Safe Shutdown Components

Fire Area/ Fire Zone	System	Description	Class 1E Division			
			A	C	B	D
1202 AF 04	IDSA	Battery 1A	DB-1A			
		Battery 1B	DB-1B			
		250 Vdc Distribution Panel	DD-1			
		208/120 Vac Distribution Panel	EA-1			
		208/120 Vac Distribution Panel	EA-2			
		250 Vdc Switchboard	DS-1			
		208/120 Vac Inverter	DU-1			
		Regulating Transformer	DT-1			
		Battery Charger	DC-1			
		Voltage to Class 1E Battery Charger	--- 001			
		Voltage to Class 1E Battery Charger	--- 005			
	PMS	Protection and Safety Monitoring System Cabinets				
1202 AF 05	PMS	Transfer Switch Set	JW-004A	JW-004C	JW-004B	JW-004D
1210 AF 01	IDS	Spare Battery (DB-1A)	Note 1	Note 1	Note 1	Note 1
		Spare Battery (DB-1B)	Note 1	Note 1	Note 1	Note 1
		Spare Battery Charger (DC-1)	Note 1	Note 1	Note 1	Note 1
		Spare Fuse Transfer Box (DF-1)	Note 1	Note 1	Note 1	Note 1
1220 AF 01	IDS	Class 1E Cable Trays			Note 1	Note 1
	ECS	6900V RCP 1A Switchgear			ES-32	
		6900V RCP 2A Switchgear			ES-52	
		6900V RCP 1B Switchgear			ES-42	

Table 9A-2 (Sheet 14 of 14)
Safe Shutdown Components

Fire Area/ Fire Zone	System	Description	Class 1E Division			
			A	C	B	D
1220 AF 01	ECS	6900V RCP 2B Switchgear			ES-62	
1220 AF 02	CVS	Letdown Containment Isolation Valve				V047
		Makeup Line Cont. Isolation Valve				V090
	WLS	Sump Discharge Cont. Isolation Valve				V057
		RCDT Gas Outlet Cont. Isolation Valve				V068
1230 AF 01	IDS	Class 1E Cable Trays	Note 1	Note 1		
1230 AF 02	IDS	Class 1E Cable Trays			Note 1	Note 1
1232 AF 01		Remote Shutdown Room				
	IDS	Class 1E Cable Trays	Note 1	Note 1	Note 1	Note 1
1240 AF 01	IDS	Class 1E Cable Trays	Note 1	Note 1		
1242 AF 01		MCR Workstation				
	IDS	Class 1E Cable Trays	Note 1	Note 1	Note 1	Note 1
1242 AF 02	IDSA	Class 1E Electrical Penetration	EY-P11Z			
		Class 1E Electrical Penetration	EY-P12Y			
		Class 1E Electrical Penetration	EY-P13Y			
		250 Vdc MCC	DK-1			
1243 AF 01		Reactor Trip Switchgear I				
	IDS	Class 1E Cables	Note 1	Note 1	Note 1	Note 1
1243 AF 02		Reactor Trip Switchgear II				
	IDS	Class 1E Cables	Note 1	Note 1	Note 1	Note 1

Note:
1. This represents equipment such as cables that have no associated tag number.

Table 9A-3 (Sheet 1 of 24)
Fire Protection Summary

Fire Area/Zone (1)	Safety Area?(2)	Floor Area Sq Ft	Combust. Material(3)	Fire Sev. Cat.	Amount	Heat Value (Btu)	Comb. Load, Btu/Sq Ft	Equiv. Dur. (Min)	Boundary Fire Res.(4) (Hours)	Detect. Cap.	Fixed Suppression Capability(5)
1000 AF 01	YES								3	SMOKE HEAT	SEE ZONE
1100 AF 11105			CABLE INS	C	100	1.0E+06					HOSE STATION
REACTOR CAVITY		260	NET CAT.	C	TOTAL:	1.0E+06	3900	2			
1100 AF 11204			CABLE INS	C	100	1.0E+06					HOSE STATION
VERTICAL ACCESS/RCDT ROOM		790	NET CAT.	C	TOTAL:	1.0E+06	1300	1			
1100 AF 11206			CABLE INS	C	200	2.0E+06					HOSE STATION
PXS VALVE/ACCUMULATOR ROOM A		790	NET CAT.	C	TOTAL:	2.0E+06	2600	1			
1100 AF 11207			CABLE INS	C	200	2.0E+06					HOSE STATION
PXS VALVE/ ACCUMULATOR ROOM B		750	NET CAT.	C	TOTAL:	2.0E+06	2700	1			
1100 AF 11208			CABLE INS	C	200	2.0E+06					HOSE STATION
RNS VALVE ROOM		310	NET CAT.	C	TOTAL:	2.0E+06	6600	5			
1100 AF 11209			CABLE INS	C	500	5.1E+06					HOSE STATION
CVS ROOM		570	NET CAT.	C	TOTAL:	5.1E+06	8900	7			
1100 AF 11300A			CABLE INS	C	2500	2.6E+07					HOSE STATION
MAINTENANCE FLOOR			TRASH	B	500	3.9E+06					
SOUTHEAST			VOLATILES	E	10	1.4E+06					
		1550	NET CAT.	D	TOTAL:	3.1E+07	20,000	15			
1100 AF 11300B			CABLE INS	C	10000	1.0E+08					WATER SPRAY
MAINTENANCE FLOOR			TRASH	B	1000	7.7E+06					HOSE STATION
NORTH			VOLATILES	E	40	5.4E+06					
		3725	NET CAT.	D	TOTAL:	1.2E+08	31,000	23			
1100 AF 11300C MAINTENANCE FLOOR WEST			NEGLIGIBLE								HOSE STATION
1100 AF 11301			CABLE INS	C	500	5.1E+06					HOSE STATION
SG COMPARTMENT I		810	NET CAT.	C	TOTAL:	5.1E+06	6300	5			
1100 AF 11302			CABLE INS	C	500	5.1E+06					HOSE STATION
SG COMPARTMENT 2		620	NET CAT.	C	TOTAL:	5.1E+06	8200	6			
1100 AF 11303			CABLE INS	C	200	2.0E+06					HOSE STATION
PRESSURIZER COMPARTMENT		220	NET CAT.	C	TOTAL:	2.0E+06	9300	7			
1100 AF 11303A			CABLE INS	C	100	1.0E+06					HOSE STATION
LOWER ADS VALVE AREA		144	NET CAT.	C	TOTAL:	1.0E+06	7100	5			
1100 AF 11303B			CABLE INS	C	100	1.0E+06					HOSE STATION
UPPER ADS VALVE AREA		144	NET CAT.	C	TOTAL:	1.0E+06	7100	5			

Table 9A-3 (Sheet 2 of 24)
Fire Protection Summary

Fire Area/Zone (1)	Safety Area?(2)	Floor Area Sq Ft	Combust. Material(3)	Fire Sev. Cat.	Amount	Heat Value (Btu)	Comb. Load, Btu/Sq Ft	Equiv. Dur. (Min)	Boundary Fire Res.(4) (Hours)	Detect. Cap.	Fixed Suppression Capability(5)
1100 AF 11500			CABLE INS	C	12000	1.2E+08					HOSE STATION
OPERATING DECK AND			PAPER	C	500	3.9E+06					
REFUELING CAVITY			VOLATILES	E	55	7.5E+06					
			LUBE OIL	E	10	1.5E+06					
		11150	NET CAT.	D	TOTAL:	1.4E+08	12000	9			
1200 AF 12341			CABLE INS	C	4000	4.1E+07					NONE
MIDDLE ANNULUS			RUBBER	D	1200	1.5E+07					
		1845	NET CAT.	D	TOTAL:	5.5E+07	30000	22			
1200 AF 12541			CABLE INS	C	500	5.1E+06					NONE
UPPER ANNULUS		1685	NET CAT.	C	TOTAL:	5.1E+06	3000	1			
1270 AF 12701			CABLE INS	C	500	5.1E+06					NONE
PCS VALVE ROOM		800	NET CAT.	C	TOTAL:	5.1E+06	6400	5			
1250 AF 12555			CABLE INS	C	4000	4.1E+07					HOSE STATION
VES AIR STORAGE/			PAPER	C	1000	7.7E+06					
OPERATING DECK			TRASH	B	1000	7.7E+06					
STAGING AREA			CLOTH	B	500	4.0E+06					
			WOOD	C	500	4.2E+06					
			PLASTIC	D	500	6.6E+06					
			RUBBER	D	100	1.2E+06					
			VOLATILES	E	10	1.4E+06					
		1200	NET CAT.	D	TOTAL:	7.4E+07	61000	49			
FIRE AREA TOTAL		27363	NET CAT.	D	TOTAL:	4.5E+08	16000	12			
1200 AF 01	YES								3	SMOKE	SEE ZONE
1200 AF 12241			CABLE INS	C	200	2.0E+06					HOSE STATION
LOWER ANNULUS		1800	NET CAT.	C	TOTAL:	2.0E+06	1100	1			
1200 AF 12461			CABLE INS	C	1000	1.0E+07					HOSE STATION
CORRIDOR			TRASH	B	200	1.5E+06					
		480	NET CAT.	C	TOTAL:	1.2E+07	24000	19			
1205 AF 12362			CABLE INS	C	500	5.1E+06					
RNS HX ROOM			VOLATILES	E	10	1.4E+06					
		275	NET CAT.	E	TOTAL:	6.5E+06	23000	18			
1205 AF 12365			CABLE INS	C	500	5.1E+06					
WASTE MONITOR			PAPER	C	100	7.7E+05					
TANK ROOM B			VOLATILES	E	5	6.8E+05					
		330	NET CAT.	D	TOTAL:	6.6E+06	20000	15			
1210 AF 12151			CABLE INS	C	8000	8.2E+07					HOSE STATION
DEMIN./FILTER,			LUBE OIL	E	10	1.5E+06					
WLS & WGS			VOLATILES	E	10	1.4E+06					
EQUIPMENT ROOMS			PAPER	C	100	7.7E+05					
		1890	NET CAT.	D	TOTAL:	8.5E+07	45000	34			

Table 9A-3 (Sheet 3 of 24)
Fire Protection Summary

Fire Area/Zone (1)	Safety Area?(2)	Floor Area Sq Ft	Combust. Material(3)	Fire Sev. Cat.	Amount	Heat Value (Btu)	Comb. Load, Btu/Sq Ft	Equiv. Dur. (Min)	Boundary Fire Res.(4) (Hours)	Detect. Cap.	Fixed Suppression Capability(5)
1210 AF 12171			CABLE INS	C	2000	2.0E+07					HOSE STATION
EFFLUENT HOLDUP			PAPER	C	500	3.9E+06					
TANK ROOM A			VOLATILES	E	10	1.4E+06					
		785	NET CAT.	D	TOTAL:	2.6E+07	33000	25			
1214 AF 12152			CABLE INS	C	500	5.1E+06					HOSE STATION
PRIMARY SAMPLE ROOM			PAPER	C	100	7.7E+05					
			PLASTIC	D	200	2.6E+06					
		280	NET CAT.	D	TOTAL:	8.5E+06	30000	23			
1214 AF 12154			CABLE INS	C	200	2.0E+06					HOSE STATION
AUX. BLDG SUMP AND		190	NET CAT.	C	TOTAL:	2.0E+06	11000	8			
SFS PENETRATION ROOM											
1214 AF 12354			CABLE INS	C	200	2.0E+06					
MID ANNULUS		200	NET CAT.	C	TOTAL:	2.0E+06	10000	8			
ACCESS ROOM											
1215 AF 12161			CABLE INS	C	1000	1.0E+07					HOSE STATION
CORRIDOR		580	NET CAT.	D	TOTAL:	1.0E+07	17000	14			
1215 AF 12162			CABLE INS.	C	500	5.1E+06					
RNS PUMP ROOM A			LUBE OIL	E	5	7.6E+05					
		205	NET CAT.	D	TOTAL:	5.9E+06	29000	22			
1216 AF 12166			CABLE INS	C	200	2.0E+06					HOSE STATION
WASTE HOLDUP			VOLATILES	E	10	1.4E+06					
TANK ROOM A		280	NET CAT.	E	TOTAL:	3.4E+06	12000	9			
1216 AF 12167			CABLE INS	C	200	2.0E+06					HOSE STATION
WASTE HOLDUP			VOLATILES	E	10	1.4E+06					
TANK ROOM B		300	NET CAT.	E	TOTAL:	3.4E+06	11000	9			
1216 AF 12169			CABLE INS	C	1000	1.0E+07					HOSE STATION
WLS PUMP ROOM/			LUB OIL	E	5	7.6E+05					
CORRIDOR			VOLATILES	E	10	1.4E+06					
		475	NET CAT.	E	TOTAL:	1.1E+07	23000	17			
1216 AF 12172			CABLE INS	C	2000	2.0E+07					HOSE STATION
EFFLUENT HOLDUP			PAPER	C	500	3.9E+06					
TANK ROOM B			VOLATILES	E	10	1.4E+06					
		795	NET CAT.	D	TOTAL:	2.6E+07	32000	24			
1216 AF12264			CABLE INS	C	500	5.1E+06					HOSE STATION
WASTE MONITOR TANK			VOLATILES	E	10	1.4E+06					
ROOM C & CHEM. WASTE		660	NET CAT.	E	TOTAL:	6.5E+06	9800	7			
TANK ROOM											
1220 AF 12251			CABLE INS	C	7000	7.1E+07					WET PIPE(6)
DEMIN./FILTER ACCESS			PAPER	C	1000	7.7E+06					SPRINKLER
AREA AND CVS MAKEUP			PLASTIC	D	200	2.6E+06					HOSE STATION
PUMP ROOMS			LUBE OIL	E	5	7.6E+05					
			VOLATILES	E	10	1.4E+06					
		1750	NET CAT.	D	TOTAL:	8.4E+07	48000	37			

Table 9A-3 (Sheet 4 of 24)
Fire Protection Summary

Fire Area/Zone (1)	Safety Area?(2)	Floor Area Sq Ft	Combust. Material(3)	Fire Sev. Cat.	Amount	Heat Value (Btu)	Comb. Load, Btu/Sq Ft	Equiv. Dur. (Min)	Boundary Fire Res.(4) (Hours)	Detect. Cap.	Fixed Suppression Capability(5)
1220 AF12256			CABLE INS.	C	400	4.1E+06					
EL 92'-6" PIPE CHASE/		1000	NET CAT.	C	TOTAL:	4.1E+06	4100	2			
VALVE ROOM											
1220 AF 12269			CABLE INS	C	100	1.0E+06					HOSE STATION
EL 92'-6" PIPE CHASE		800	NET CAT.	C	TOTAL:	1.0E+06	1300	1			
1220 AF 12271			CABLE INS	C	5000	5.1E+07					HOSE STATION
SFS EQUIPMENT ROOMS			LUBE OIL	E	10	1.5E+06					
			VOLATILES	E	10	1.4E+06					
		1190	NET CAT.	D	TOTAL:	5.4E+07	45000	34			
1224 AF 12252			CABLE INS	C	800	8.2E+06					HOSE STATION
RADIOACTIVE CHEMISTRY			PAPER	C	500	3.9E+06					
LABORATORY			PLASTIC	D	500	6.6E+06					
			VOLATILES	E	5	6.8E+05					
		285	NET CAT.	D	TOTAL:	1.9E+07	68000	55			
1225 AF 12261			CABLE INS	C	3000	3.1E+07					HOSE STATION
WLS PUMP ROOM			LUBE OIL	E	5	7.6E+05					
AND CORRIDOR			VOLATILES	E	5	6.8E+05					
		865	NET CAT.	D	TOTAL:	3.2E+07	37000	28			
1225 AF 12262			CABLE INS	C	200	2.0E+06					
PIPING/VALVE ROOM			VOLATILES	E	5	6.8E+05					
		475	NET CAT.	C	TOTAL:	2.7E+06	6000	4			
1234 AF 12351			CABLE INS	C	4000	4.1E+07					
MAINTENANCE FLOOR			PAPER	C	1000	7.7E+06					
STAGING AREA			WOOD	C	1000	8.4E+06					
			TRASH	B	1000	7.7E+06					
			CLOTH	B	500	4.0E_06					
			PLASTIC	D	500	6.6E+06					
			RUBBER	D	200	2.4E+06					
			VOLATILES	E	50	6.8E+06					
		1100	NET CAT.	E	TOTAL:	8.4E+07	77000	58			
1234 AF12352			CABLE INS	C	500	5.1E+06					
ELEVATION 107'-2"			TRASH	B	200	1.5E+06					
PERSONNEL HATCH		265	NET CAT.	C	TOTAL:	6.6E+06	25000	19			
1235 AF 12361			CABLE INS	C	2000	2.0E+07					HOSE STATION
CORRIDOR			TRASH	B	500	3.9E+06					
		480	NET CAT.	C	TOTAL:	2.4E+07	51000	39			
1235 AF 12363			CABLE INS	C	500	5.1E+06					
WASTE MONITOR			PAPER	C	100	7.7E+05					
TANK ROOM A			VOLATILES	E	5	6.8E+05					
		275	NET CAT.	D	TOTAL:	6.6E+06	24000	18			
1244 AF 12451			CABLE INS	C	450	4.6E+06					
SECURITY ROOM			PAPER	C	500	3.9E+06					
		308	NET CAT.	C	TOTAL:	8.5E+06	27600	28			
1244 AF 12452			CABLE INS	C	600	6.1E+06					
VFS PENETRATION ROOM		265	NET CAT.	C	TOTAL:	6.1E+06	23100	20			
1244 AF 12454			CABLE INS	C	200	2.0E+06					
VFS/SFS/PSS		190	NET CAT.	C	TOTAL:	2.0E+06	11000	8			
PENETRATION ROOM											

Table 9A-3 (Sheet 5 of 24)
Fire Protection Summary

Fire Area/Zone (1)	Safety Area?(2)	Floor Area Sq Ft	Combust. Material(3)	Fire Sev. Cat.	Amount	Heat Value (Btu)	Comb. Load, Btu/Sq Ft	Equiv. Dur. (Min)	Boundary Fire Res.(4) (Hours)	Detect. Cap.	Fixed Suppression Capability(5)
1250 AF 12561			CABLE INS	C	1000	1.0E+07					HOSE STATION
CCS VALVE ROOM AND			VOLATILES	E	5	6.8E+05					
ACCESS CORRIDOR		630	NET CAT.	D	TOTAL:	1.1E+07	17000	13			
1254 AF 12553			CABLE INS	C	5000	5.1E+07					
ELEVATION 135'-3"			PAPER	C	1000	7.7E+06					
PERSONNEL ACCESS			TRASH	B	500	3.9E+06					
AREA			VOLATILES	E	10	1.4E+06					
		1350	NET CAT.	D	TOTAL:	6.4E+07	47000	36			
1244 AF 12451			CABLE INS	C	400	4.1E+06					
SECURITY ROOM			PAPER	C	500	3.8E+06					
		308	NET CAT.	C	TOTAL:	7.9E+06	25900	22			
1254 AF 12554			CABLE INS	C	400	4.1E+06					
SECURITY ROOM			PAPER	C	1000	7.7E+06					
		268	NET CAT.	C	TOTAL:	1.2E+07	62000	51			
1264 AF 12651			CABLE INS	C	5000	5.1E+07					
VAS EQUIPMENT			LUBE OIL	E	10	1.5E+06					
ROOM			VOLATILES	E	10	1.4E+06					
		1480	NET CAT.	D	TOTAL:	5.4E+07	36000	27			
FIRE AREA TOTAL:		22501	NET CAT.	D	TOTAL:	6.9E+08	30700	24			HOSE STATION
1200 AF 02	YES								3/0	SMOKE	SEE ZONE
1200 AF 12562			CABLE INS	C	10000	1.0E+08					HOSE STATION
FUEL HANDLING AREA			PAPER	C	1500	1.2E+07					
			WOOD	C	1000	8.4E+06					
			TRASH	B	1000	7.7E+06					
			CLOTH	B	500	4.0E+06					
			PLASTIC	D	500	6.6E+06					
			LUBE OIL	E	15	2.3E+06					
			VOLATILES	E	5	6.8E+05					
		4725	NET CAT.	D	TOTAL:	1.4E+08	30000	23			
1230 AF 12371			CABLE INS	C	3000	3.1E+07					WET PIPE(6)
RAIL CAR BAY/			PAPER	C	1000	7.7E+06					SPRINKLER
FILTER STORAGE AREA			WOOD	C	1000	8.4E+06					HOSE STATION
			TRASH	B	1000	7.7E+06					
			LUBE OIL	E	10	1.5E+06					
			FUEL OIL	E	100	1.4E+07					
		1460	NET CAT.	D	TOTAL:	7.0E+07	48000	37			
1236 AF 12372			CABLE INS	C	200	2.0E+06					HOSE STATION
RESIN TRANSFER PUMP/			LUBE OIL	E	5	7.6E+05					
VALVE ROOM		80	NET CAT.	E	TOTAL:	2.8E+06	35000	26			
1236 AF 12373			CABLE INS	C	200	2.0E+06					HOSE STATION
SPENT RESIN TANK ROOM		70	NET CAT.	C	TOTAL:	2.0E+06	29000	22			
1246 AF 12471			CABLE INS	C	200	2.0E+06					HOSE STATION
WSS VALVE/PIPING AREA		90	NET CAT.	C	TOTAL:	2.0E+06	23000	17			
FIRE AREA TOTAL		6425	NET CAT.	D	TOTAL:	2.2E+08	34000	26			HOSE STATION

Table 9A-3 (Sheet 6 of 24)
Fire Protection Summary

Fire Area/Zone (1)	Safety Area?(2)	Floor Area Sq Ft	Combust. Material(3)	Fire Sev. Cat.	Amount	Heat Value (Btu)	Comb. Load, Btu/Sq Ft	Equiv. Dur. (Min)	Boundary Fire Res.(4) (Hours)	Detect. Cap.	Fixed Suppression Capability(5)
1200 AF 03	YES								3	SMOKE	HOSE STATION
1230 AF 12311			CABLE INS	C	1200	1.2E+07					
CORRIDOR		355	NET CAT.	C	TOTAL:	1.2E+07	34000	25			
1242 AF 12411			CABLE INS	C	1200	1.2E+07					
CORRIDOR		300	NET CAT.	C	TOTAL:	1.2E+07	41000	30			
FIRE AREA TOTAL:		655	NET CAT.	C	TOTAL:	2.4E+07	37000	28			
1201 AF 01	NO								2	NONE	NONE
STAIRWELL S02			NEGLIGIBLE								
1201 AF 02	YES								3	SMOKE	HOSE STATION
1211 AF 12104			BATTERIES	A	120	2.4E+07					
DIVISION B			CABLE INS	C	1000	1.0E+07					
BATTERY ROOM 1		560	NET CAT.	C	TOTAL:	3.4E+07	61000	50			
1221 AF 12204			BATTERIES	A	120	2.4E+07					
DIVISION B			CABLE INS	C	1000	1.0E+07					
BATTERY ROOM 2		560	NET CAT.	C	TOTAL:	3.4E+07	61000	50			
1222 AF 12207			CABLE INS	C	2500	2.6E+07					
DIVISION B		395	NET CAT.	C	TOTAL:	2.6E+07	65000	54			
DC EQUIPMENT ROOM											
1231 AF 12304			CABLE INS	C	3500	3.6E+07					
DIVISION B I&C/		585	NET CAT.	C	TOTAL:	3.6E+07	61000	50			
PENETRATION ROOM											
FIRE AREA TOTAL		2100	NET CAT.	C	TOTAL	1.3E+08	62000	51			
1201 AF 03	YES								3	SMOKE	HOSE STATION
1211 AF 12105			BATTERIES	A	120	2.4E+07					
DIVISION D			CABLE INS	C	1000	1.0E+07					
BATTERY ROOM		560	NET CAT.	C	TOTAL:	3.4E+07	61000	50			
1221 AF 12205			CABLE INS	C	3500	3.6E+07					
DIVISION D		560	NET CAT.	C	TOTAL:	3.6E+07	64000	53			
DC EQUIPMENT ROOM											
1231 AF 12305			CABLE INS	C	3500	3.6E+07					
DIVISION D I&C/		550	NET CAT.	C	TOTAL:	3.6E+07	65000	55			
PENETRATION ROOM											
FIRE AREA TOTAL		1670	NET CAT.	C	TOTAL	1.1E+08	63000	53			

Table 9A-3 (Sheet 7 of 24)
Fire Protection Summary

Fire Area/Zone (1)	Safety Area?(2)	Floor Area Sq Ft	Combust. Material(3)	Fire Sev. Cat.	Amount	Heat Value (Btu)	Comb. Load, Btu/Sq Ft	Equiv. Dur. (Min)	Boundary Fire Res.(4) (Hours)	Detect. Cap.	Fixed Suppression Capability(5)
1201 AF 04	YES								3	SMOKE	HOSE STATION
1241 AF 12405			CABLE INS	C	3000	3.1E+07					
LOWER VBS B&D			PAPER	C	1000	7.7E+06					
EQUIPMENT ROOM			VOLATILES	E	5	6.8E+05					
		670	NET CAT.	C	TOTAL:	3.9E+07	58000	47			
1251 AF 12505			CABLE INS	C	3000	3.1E+07					
UPPER VBS B&D			PAPER	C	1000	7.7E+06					
EQUIPMENT ROOM			VOLATILES	E	5	6.8E+05					
		705	NET CAT.	C	TOTAL:	3.9E+07	55000	44			
FIRE AREA TOTAL:		1375	NET CAT.	C	TOTAL:	7.8E+07	57000	46			
1201 AF 05	YES								3	SMOKE	HOSE STATION
1231 AF 12306			CABLE INS	C	2500	2.6E+07					
VALVE/PIPING PENETRATION ROOM		600	NET CAT.	C	TOTAL	2.6E+07	43000	31			
1241 AF 12506			CABLE INS	C	3000	3.1E+07					
MSIV COMPARTMENT A			LUBE OIL	E	40	6.0E+06					
		705	NET CAT.	C	TOTAL:	3.7E+07	52000	40			
FIRE AREA TOTAL:		1305	NET CAT.	C	TOTAL:	6.2E+07	48000	37			
1201 AF 06	YES								3	SMOKE	HOSE STATION
MSIV COMPARTMENT B			CABLE INS	C	3000	3.1E+07					
			LUBE OIL	E	40	6.0E+06					
FIRE AREA TOTAL:		695	NET CAT.	E	TOTAL	3.7E+07	53000	40			
1202 AF 01	NO								2	NONE	NONE
STAIRWELL S01			NEGLIGIBLE								
1202 AF 02	NO								2	SMOKE	HOSE STATION
NORTHEAST ELEVATOR			CABLE INS	C	600	6.1E+06					
SHAFT/MACHINE ROOM			LUBRICANT	E	5	9.9E+04					
FIRE AREA TOTAL:		205	NET CAT.	E	TOTAL:	6.2E+06	30000	23			

Table 9A-3 (Sheet 8 of 24)
Fire Protection Summary

Fire Area/Zone (1)	Safety Area?(2)	Floor Area Sq Ft	Combust. Material(3)	Fire Sev. Cat.	Amount	Heat Value (Btu)	Comb. Load, Btu/Sq Ft	Equiv. Dur. (Min)	Boundary Fire Res.(4) (Hours)	Detect. Cap.	Fixed Suppression Capability(5)
1202 AF 03	YES								3	SMOKE	HOSE STATION
1212 AF 12102			BATTERIES	A	120	2.4E+07					
DIVISION C			CABLE INS	C	1000	1.0E+07					
BATTERY ROOM 1		560	NET CAT.	C	TOTAL:	3.4E+07	61000	50			
1222 AF 12202			BATTERIES	A	120	2.4E+07					
DIVISION C			CABLE INS	C	1000	1.0E+07					
BATTERY ROOM 2		560	NET CAT.	C	TOTAL:	3.4E+07	61000	50			
1222 AF 12203			CABLE INS	C	2500	2.6E+07					
DIVISION C		395	NET CAT.	C	TOTAL:	2.6E+07	65000	54			
DC EQUIPMENT ROOM											
1232 AF 12302			CABLE INS	C	3500	3.6E+07					
DIVISION C I&C ROOM		550	NET CAT.	C	TOTAL:	3.6E+07	65000	55			
1232 AF 12312			CABLE INS	C	1500	1.5E+07					
DIVISION C RCP TRIP		395	NET CAT.	C	TOTAL:	1.5E+07	39000	29			
SWITCHGEAR ROOM											
1232 AF 12313			CABLE INS	C	2500	2.6E+07					
I&C/DIVISION C		555	NET CAT.	C	TOTAL:	2.6E+07	46000	35			
PENETRATION ROOM											
FIRE AREA TOTAL:		3015	NET CAT.	C	TOTAL:	1.7E+08	57000	45			
1202 AF 04	YES								3	SMOKE	HOSE STATION
1212 AF 12101			BATTERIES	A	120	2.4E+07					
DIVISION A			CABLE INS	C	1000	1.0E+07					
BATTERY ROOM		525	NET CAT.	C	TOTAL:	3.4E+07	65000	55			
1222 AF 12201			CABLE INS	C	3500	3.6E+07					
DIVISION A		525	NET CAT.	C	TOTAL	3.6E+07	68000	58			
DC EQUIPMENT ROOM											
1232 AF 12301			CABLE INS	C	3500	3.6E+07					
DIVISION A I&C ROOM		550	NET CAT.	C	TOTAL:	3.6E+07	65000	55			
FIRE AREA TOTAL:		1600	NET CAT.	C	TOTAL:	1.1E+08	66000	56			
1202 AF 05	NO								3	SMOKE	NONE
STAIRWELL S05			NEGLIGIBLE								
1204 AF 01	NO								3	SMOKE	HOSE STATION
RNS PUMP ROOM B			CABLE INS	C	500	5.0E+06					
			LUBE OIL	E	5	7.6E+05					
		205	NET CAT	D	TOTAL:	5.8E+06	28000	23			
FIRE AREA TOTAL:		205	NET CAT.	D	TOTAL:	5.8E+06	28000	23			

Table 9A-3 (Sheet 9 of 24)
Fire Protection Summary

Fire Area/Zone (1)	Safety Area?(2)	Floor Area Sq Ft	Combust. Material(3)	Fire Sev. Cat.	Amount	Heat Value (Btu)	Comb. Load, Btu/Sq Ft	Equiv. Dur. (Min)	Boundary Fire Res.(4) (Hours)	Detect. Cap.	Fixed Suppression Capability(5)
1204 AF 02	NO								2/0	NONE	NONE
STAIRWELL S03			NEGLIGIBLE								
1204 AF 03	NO								2/0	SMOKE	HOSE STATION
SHIELD BLDG ELEVATOR			CABLE INS	C	600	6.1E+06					
			LUBRICANT	E	5	9.9E+04					
FIRE AREA TOTAL:		195	NET CAT.	C	TOTAL:	6.2E+06	32000	24			
1205 AF 01	NO								2	NONE	NONE
STAIRWELL S04			NEGLIGIBLE								
1205 AF 02	NO								2	SMOKE	HOSE STATION
SOUTHEAST ELEVATOR			CABLE INS	C	600	6.1E+06					
SHAFT/MACHINE ROOM			LUBRICANT	E	5	9.9E+04					
FIRE AREA TOTAL:		195	NET CAT.	C	TOTAL:	6.2E+06	32000	24			
1210 AF 01	YES								3	SMOKE	HOSE STATION
1210 AF 12111			CABLE INS	C	3000	3.1E+07					
CORRIDOR			TRASH	B	500	3.9E+06					
		1535	NET CAT.	C	TOTAL:	3.4E+07	22000	16			
1212 AF 12103			BATTERIES	A	120	2.4E+07					
SPARE BATTERY ROOM			CABLE INS	C	1000	1.0E+07					
		825	NET CAT.	C	TOTAL:	3.4E+07	41000	30			
1212 AF 12112			CABLE INS	C	500	5.1E+06					
SPARE ROOM			PAPER	C	1000	7.7E+06					
			PLASTIC	D	500	6.6E+06					
			CLOTH	B	100	8.0E+05					
			TRASH	B	100	7.7E+05					
			VOLATILES	E	10	1.4E+06					
		340	NET CAT.	D	TOTAL:	2.2E+07	66000	53			
1212 AF 12113			CABLE INS	C	1500	1.5E+07					
SPARE BATTERY		190	NET CAT.	C	TOTAL:	1.5E+07	81000	73			
CHARGER ROOM											
FIRE AREA TOTAL:		2890	NET CAT.	C	TOTAL:	1.1E+08	37000	27			

Table 9A-3 (Sheet 10 of 24)
Fire Protection Summary

Fire Area/Zone (1)	Safety Area?(2)	Floor Area Sq Ft	Combust. Material(3)	Fire Sev. Cat.	Amount	Heat Value (Btu)	Comb. Load, Btu/Sq Ft	Equiv. Dur. (Min)	Boundary Fire Res.(4) (Hours)	Detect. Cap.	Fixed Suppression Capability(5)
1220 AF 01	YES								3	SMOKE	HOSE STATION
1220 AF 12211			CABLE INS	C	3000	3.1E+07					
CORRIDOR			TRASH	B	500	3.9E+06					
		1510	NET CAT.	C	TOTAL:	3.4E+07	23000	17			
1222 AF 12212			CABLE INS	C	1500	1.5E+07					
DIVISION B RCP TRIP		340	NET CAT.	C	TOTAL:	1.5E+07	45000	34			
SWITCHGEAR ROOM											
1222 AF 12213			CABLE INS	C	1000	1.0E+07					
SPARE ROOM AND			PAPER	C	200	1.5E+06					
MOTOR CONTROL CTRS			TRASH	B	100	7.7E+05					
		190	NET CAT.	C	TOTAL:	1.3E+07	66000	56			
FIRE AREA TOTAL:		2040	NET CAT.	C	TOTAL:	6.2E+07	31000	23			
1220 AF 02	YES								3	SMOKE	HOSE STATION
LOWER ANNULUS			CABLE INS	C	500	5.1E+06					
VALVE AREA											
FIRE AREA TOTAL:		220	NET CAT.	C	TOTAL:	5.1E+06	23000	13			
1230 AF 01	YES								3	SMOKE	HOSE STATION
CORRIDOR			CABLE INS	C	2500	2.6E+07					
FIRE AREA TOTAL:		770	NET CAT.	C	TOTAL:	2.6E+07	33000	24			
1230 AF 02	YES								3	SMOKE	HOSE STATION
NON-1E EQUIPMENT/ PENETRATION ROOM			CABLE INS	C	3500	3.6E+07					PREACTION SPRINKLER
FIRE AREA TOTAL:		870	NET CAT.	C	TOTAL:	3.6E+07	41000	30			
1232 AF 01	YES								3	SMOKE	HOSE STATION
REMOTE SHUTDOWN ROOM			CABLE INS	C	1500	1.5E+07					
			PAPER	C	1000	7.7E+06					
			PLASTIC	D	500	6.6E+06					
FIRE AREA TOTAL:		410	NET CAT.	C	TOTAL:	3.0E+07	72000	63			
1240 AF 01	YES								3	SMOKE	HOSE STATION
NON-1E EQUIPMENT/ PENETRATION ROOM			CABLE INS	C	3500	3.6E+07					
FIRE AREA TOTAL:		800	NET CAT.	C	TOTAL:	3.6E+07	45000	34			

Table 9A-3 (Sheet 11 of 24)
Fire Protection Summary

Fire Area/Zone (1)	Safety Area?(2)	Floor Area Sq Ft	Combust. Material(3)	Fire Sev. Cat.	Amount	Heat Value (Btu)	Comb. Load, Btu/Sq Ft	Equiv. Dur. (Min)	Boundary Fire Res.(4) (Hours)	Detect. Cap.	Fixed Suppression Capability(5)
1242 AF 01	YES								3	SMOKE	HOSE STATION
1242 AF 12401A			CABLE INS	C	4000	4.1E+07					
MCR MAIN CONTROL AREA/			PAPER	C	3500	2.7E+07					
TAGGING ROOM/VESTIBULE			PLASTIC	D	1000	1.3E+07					
			CARPET	D	1159	1.5E+07					
		1545	NET CAT.	C	TOTAL:	9.6E+07	62000	50			
1242 AF 12401B			CABLE INS	C	2000	2.0E+07					
MCR SHIFT SUP'R/CLERK/			PAPER	C	2000	1.5E+07					
OPERATOR AREAS			PLASTIC	D	1000	1.3E+07					
			CARPET	D	538	7.1E+06					
			CHARCOAL	C	100	1.5E+06					
		845	NET CAT.	C	TOTAL:	5.8E+07	68000	56			
FIRE AREA TOTAL:		2390	NET CAT.	C	TOTAL:	1.5E+08	64000	52			
1242 AF 02	YES								3	SMOKE	HOSE STATION
DIVISION A ELECTRICAL			CABLE INS	C	2000	2.0E+07					
PENETRATION ROOM											
FIRE AREA TOTAL:		450	NET CAT.	C	TOTAL:	2.0E+07	45000	34			
1243 AF 01	YES								3	SMOKE	HOSE STATION
REACTOR TRIP			CABLE INS	C	500	5.1E+06					
SWITCHGEAR 1											
FIRE AREA TOTAL:		95	NET CAT.	C	TOTAL:	5.1E+06	54000	42			
1243 AF 02	YES								3	SMOKE	HOSE STATION
REACTOR TRIP			CABLE INS	C	500	5.1E+06					
SWITCHGEAR 2											
FIRE AREA TOTAL:		95	NET CAT.	C	TOTAL:	5.1E+06	54000	42			
1250 AF 01	NO								3	SMOKE	HOSE STATION
VBS MCR/A&C			CABLE INS	C	12000	1.2E+08					CHARCOAL BED
EQUIPMENT ROOM			CHARCOAL	C	5000	7.3E+07					DELUGE
			LUBE OIL	E	20	3.0E+06					
			VOLATILES	E	10	1.4E+06					
FIRE AREA TOTAL:		3575	NET CAT.	D	TOTAL:	2.0E+08	56000	44			

Table 9A-3 (Sheet 12 of 24)
Fire Protection Summary

Fire Area/Zone (1)	Safety Area?(2)	Floor Area Sq Ft	Combust. Material(3)	Fire Sev. Cat.	Amount	Heat Value (Btu)	Comb. Load, Btu/Sq Ft	Equiv. Dur. (Min)	Boundary Fire Res.(4) (Hours)	Detect. Cap.	Fixed Suppression Capability(5)
2000 AF 01	NO			0	SEE ZONE	SEE ZONE					
2030 AF 20300			CABLE INS	C	87,800	9.0E+08				HEAT	WET PIPE
ELEVATION 100'-0"			LUBE OIL	E	4050	6.1E+08					SPRINKLERS(6)
(BASE SLAB) GENERAL			PLASTIC	D	12,500	5.1E+08					HOSE STATION
FLOOR AREA			VOLATILES	E	375	3.4E+07					
			FUEL OIL	E	125	1.8E+07					
			TRASH	B	1000	7.7E+06					
		38062	NET CAT.	E	TOTAL:	1.8E+09	47,300	35			
2038 AF 20300			CABLE INS	C	3000	3.1E+07				HEAT	PREACTION
MAIN FEEDWATER			LUBE OIL	E	2250	3.4E+08					SPRINKLERS
PUMP AREA			PLASTIC	D	150	2.0E+06					
			VOLATILES	E	55	7.5E+06					
			TRASH	B	200	1.5E+06					
		4542	NET CAT.	E	TOTAL:	3.8E+08	83670	63			
2039 AF 20301			CABLE INS	C	300	3.1E+06				HEAT	WATER SPRAY
CHEMICAL STORAGE AREA			LUBE OIL	E	250	3.8E+07					HOSE STATION
			PLASTIC	D	125	1.7E+06					
			VOLATILES	E	600	8.2E+07					
			TRASH	B	250	1.9E+06					
		1684	NET CAT.	E	TOTAL:	1.3E+08	75000	56			
2040 AF 20400			CABLE INS	C	87,800	9.0E+08				HEAT	WET PIPE
ELEVATION 117'-6"			LUBE OIL	E	1450	2.2E+08					SPRINKLERS
GENERAL FLOOR AREA			PLASTIC	D	6500	8.6E+07					HOSE STATION
			VOLATILES	E	180	2.4E+07					
			TRASH	B	1500	1.2E+07					
		42,606	NET CAT.	E	TOTAL:	1.2E+09	28,170	21			
2050 AF 20500			CABLE INS	C	87000	8.9E+08				HEAT	WET PIPE
ELEVATION 135'-3"			LUBE OIL	E	5400	8.2E+08					SPRINKLERS
GENERAL FLOOR AREA			PLASTIC	D	6000	7.9E+07					HOSE STATION
			VOLATILES	E	100	1.4E+07					
			HYDROGEN	E	50	7.6E+06					
			TRASH	B	50	3.9E+06					
		378900	NET CAT.	E	TOTAL:	1.8E+09	47510	36			
2050 AF 20502			CABLE INS	C	600	6.1E+06				SMOKE	WATER SPRAY
DEH SKID			LUBE OIL	E	250	3.8E+07					HOSE STATION
			PLASTIC	D	150	2.0E+06					
			TRASH	B	100	7.7E+05					
		149	NET CAT.	E	TOTAL:	4.7E+07	313000	235			
2052 AF 20504			CABLE INS	C	150	3.1E+06				SMOKE	HOSE STATION
HVAC EQUIPMENT AREA			PAPER	C	250	3.9E+06					
			PLASTIC	D	125	3.3E+06					
			RUBBER	D	13	3.1E+05					
			TRASH	B	13	2.0E+05					
		1231	NET CAT.	D	TOTAL:	1.1E+07	8700	7			

Table 9A-3 (Sheet 13 of 24)
Fire Protection Summary

Fire Area/Zone (1)	Safety Area?(2)	Floor Area Sq Ft	Combust. Material(3)	Fire Sev. Cat.	Amount	Heat Value (Btu)	Comb. Load, Btu/Sq Ft	Equiv. Dur. (Min)	Boundary Fire Res.(4) (Hours)	Detect. Cap.	Fixed Suppression Capability(5)
2053 AF 20506			CABLE INS	C	720	7.2E+06				SMOKE	HOSE STATION
OFFICES AT 149'-0"			PLASTIC	D	900	1.2E+07					
			TRASH	B	50	4.0E+05					
			CLOTH	B	720	5.7E+06					
			PAPER	C	14000	1.1E+08					
			WOOD	C	1800	1.5E+07					
		3634	NET CAT.	D	TOTAL:	1.5E+08	41400	39			
2057 AF 20503			CABLE INS	C	2000	2.0E+07				HEAT	WATER SPRAY
GENERATOR SEAL			LUBE OIL	E	400	6.0E+07					HOSE STATION
OIL UNIT			PLASTIC	D	300	4.0E+06					
			VOLATILES	E	55	7.5E+06					
			TRASH	B	200	1.5E+06					
		144	NET CAT.	E	TOTAL:	9.4E+07	651000	488			
2060 AF 20600			CABLE INS	C	1000	1.0E+07				HEAT	WET PIPE (7)
ELEVATION 161'-0"			LUBE OIL	E	250	3.8E+07					SPRINKLERS
GENERAL FLOOR AREA			PLASTIC	D	2500	3.3E+07					HOSE STATION
			VOLATILES	E	55	7.5E+06					
			TRASH	B	1000	7.7E+06					
		44042	NET CAT.	E	TOTAL:	9.6E+07	2200	2			
2063 AF 20601			CABLE INS	C	600	6.1E+06				SMOKE	HOSE STATION
TOOL ROOM/			PAPER	C	600	4.6E+06					
STORAGE AREA			PLASTIC	D	600	7.9E+06					
			RUBBER	D	100	1.2E+06					
			TRASH	B	50	3.9E+05					
		368	NET CAT.	D	TOTAL:	2.0E+07	55000	43			
2063 AF 20602			CABLE INS	C	250	2.6E+06				SMOKE	HOSE STATION
OFFICE AREA/ENGINEERING			PAPER	C	1200	9.2E+06					
WORKSTATION			PLASTIC	D	600	7.9E+06					
			RUBBER	D	100	1.2E+06					
			TRASH	B	50	3.9E+05					
		368	NET CAT.	D	TOTAL:	2.1E+07	58000	46			
2131 AF 21380			CABLE INS	C	3000	3.1E+07				HEAT	WET PIPE
CCW & BDS PUMP AREA			LUBE OIL	E	300	4.5E+07					SPRINKLER
			PLASTIC	D	150	2.0E+06					HOSE STATION
			VOLATILES	E	55	7.5E+06					
			TRASH	B	200	1.5E+06					
		2880	NET CAT.	E	TOTAL:	8.7E+07	30320	23			
2141 AF 21480			CABLE INS	C	150	3.1E+06				SMOKE	HOSE STATION
SOUTH BAY 117'-6" VTS			PAPER	C	250	3.9E+06					
HVAC EQUIPMENT ROOM			PLASTIC	D	125	3.3E+06					
			RUBBER	D	13	3.1E+05					
			TRASH	B	13	2.0E+05					
		2123	NET CAT.	D	TOTAL:	1.1E+07	5182	5			
2151 AF 21580			CABLE INS	C	150	1.6E+06				SMOKE	HOSE STATION
SOUTH BAY 135'-3" LOWER			PLASTIC	D	250	3.3E+06					
VFD EQUIPMENT ROOM			TRASH	B	25	2.0E+05					
		2880	NET CAT.	D	TOTAL:	5.1E+06	1170	2			

Table 9A-3 (Sheet 14 of 24)
Fire Protection Summary

Fire Area/Zone (1)	Safety Area?(2)	Floor Area Sq Ft	Combust. Material(3)	Fire Sev. Cat.	Amount	Heat Value (Btu)	Comb. Load, Btu/Sq Ft	Equiv. Dur. (Min)	Boundary Fire Res.(4) (Hours)	Detect. Cap.	Fixed Suppression Capability(5)
2151 AF 21581			CABLE INS	C	150	1.6E+06				SMOKE	HOSE STATION
SOUTH BAY 147'-6" UPPER			PLASTIC	D	250	3.3E+06					
VFD EQUIPMENT ROOM			TRASH	B	25	2.0E+05					
		2880	NET CAT.	D	TOTAL:	5.1E+06	1770	2			
FIRE AREA TOTAL:		186,240	NET CAT.	E	TOTAL:	5.8E+09	31,140	23			
2000 AF 02	NO								2	NONE	NONE
STAIRWELL S02			NEGLIGIBLE								
2009 AF 01	NO								2	NONE	NONE
STAIRWELL S01			NEGLIGIBLE								
2000 AF 03	NO								2	NONE	NONE
STAIRWELL S03			NEGLIGIBLE								
2009 AF 02	NO								2	SMOKE	HOSE STATION
ELEVATOR			CABLE INS	C	300	3.1E+06					
			LUBRICANT	E	5	9.9E+04					
FIRE AREA TOTAL:		88	NET CAT.	E	TOTAL:	3.2E+06	36000	27			
2033 AF 02	NO								3/0	SMOKE	HOSE STATION
FPS MOTOR DRIVEN			CABLE INS	C	1000	1.0E+07					
PUMP ROOM			LUBE OIL	E	25	3.8E+06					
			PLASTIC	D	100	1.3E+06					
			TRASH	B	75	5.8E+05					
			VOLATILES	E	10	1.4E+06					
FIRE AREA TOTAL:		672	NET CAT.	E	TOTAL:	1.7E+07	26000	33			
2040 AF 01	NO								3	HEAT	WET PIPE SPRINKLER HOSE STATION
CLEAN & DIRTY LUBE OIL			CABLE INS	C	1000	1.0E+07					
STORAGE ROOM			LUBE OIL	E	29000	4.4E+09					
			TRASH	B	100	7.7E+05					
FIRE AREA TOTAL:		791	NET CAT.	E	TOTAL:	4.4E+09	5550000	4163			
2043 AF 01	NO								3/0	HEAT	WET PIPE SPRINKLER HOSE STATION
SECONDARY SAMPLING			CABLE INS	C	500	5.1E+06					
LABORATORY			LUBE OIL	E	110	1.7E+07					
			PLASTIC	D	1000	1.3E+07					
			TRASH	B	1000	7.7E+06					
			VOLATILES	E	250	3.4E+07					
FIRE AREA TOTAL:		1285	NET CAT.	E	TOTAL:	7.7E+07	60000	45			

Table 9A-3 (Sheet 15 of 24)
Fire Protection Summary

Fire Area/Zone (1)	Safety Area?(2)	Floor Area Sq Ft	Combust. Material(3)	Fire Sev. Cat.	Amount	Heat Value (Btu)	Comb. Load, Btu/Sq Ft	Equiv. Dur. (Min)	Boundary Fire Res.(4) (Hours)	Detect. Cap.	Fixed Suppression Capability(5)
2050 AF 01	NO								3	HEAT	WATER SPRAY HOSE STATION
LUBE OIL			CABLE INS	C	500	5.1E+06					
RESERVOIR ROOM			LUBE OIL	E	17000	2.6E+09					
			PLASTIC	D	100	1.3E+06					
			TRASH	B	500	3.9E+06					
			VOLATILES	E	100	1.4E+07					
FIRE AREA TOTAL:		1169	NET CAT.	E	TOTAL:	2.6E+09	2216000	1662			
2052 AF 01	NO								2/0	SMOKE	HOSE STATION
TURBINE BUILDING			CABLE INS	C	11000	1.1E+08					
SWITCHGEAR ROOM #1			PLASTIC	D	600	7.9E+06					
			TRASH	B	100	7.7E+05					
			VOLATILES	E	5	6.8E+05					
FIRE AREA TOTAL:		1854	NET CAT.	C	TOTAL:	1.2E+08	66000	55			
2053 AF 01	NO								2/0	SMOKE	HOSE STATION
ELECTRICAL			CABLE INS	C	700	7.1E+06					
EQUIPMENT ROOM			LUBE OIL	E	10	1.5E+06					
			PLASTIC	D	1300	1.7E+07					
			TRASH	B	100	7.7E+05					
			VOLATILES	E	5	6.8E+05					
FIRE AREA TOTAL:		1722	NET CAT.	D	TOTAL:	2.7E+07	16000	11			
2053 AF 02	NO								2/0	SMOKE	HOSE STATION
TURBINE BUILDING			CABLE INS	C	11000	1.1E+08					
SWITCHGEAR ROOM #2			PLASTIC	D	600	7.9E+06					
			TRASH	B	100	7.7E+05					
			VOLATILES	E	5	6.8E+05					
FIRE AREA TOTAL:		2039	NET CAT.	C	TOTAL:	1.2E+08	60000	49			
2141 AF 01	NO								2	SMOKE	HOSE STATION
2141 AF 21481			BATTERIES	A	120	2.4E+07					
BATTERY ROOM			CABLE INS	C	1000	1.0E+07					
FIRE AREA TOTAL:		529	NET CAT.	C	TOTAL:	3.4E+07	64000	56			
2142 AF 01	NO								2	SMOKE	HOSE STATION
2142 AF 21482			CABLE INS	C	1000	1.0E+07					
BATTERY CHARGER ROOM			PAPER	C	200	1.5E+06					
			PLASTIC	D	250	3.3E+06					
FIRE AREA TOTAL:		228	NET CAT.	C	TOTAL:	1.5E+07	66000	60			
4001 AF 01	NO								2	NONE	NONE
STAIRWELL S01			NEGLIGIBLE								

Table 9A-3 (Sheet 16 of 24)
Fire Protection Summary

Fire Area/Zone (1)	Safety Area?(2)	Floor Area Sq Ft	Combust. Material(3)	Fire Sev. Cat.	Amount	Heat Value (Btu)	Comb. Load, Btu/Sq Ft	Equiv. Dur. (Min)	Boundary Fire Res.(4) (Hours)	Detect. Cap.	Fixed Suppression Capability(5)
4001 AF 02	NO								2	SMOKE	HOSE STATION
ELEVATOR			LUBRICANT	E	5	9.9E+04					
FIRE AREA TOTAL:		65	NET CAT.	E	TOTAL:	9.7E+04	1500	1			
4002 AF 01	NO								2	NONE	NONE
STAIRWELL S02			NEGLIGIBLE								
4002 AF 02	NO								2	NONE	NONE
STAIRWELL S04			NEGLIGIBLE								
4002 AF 03	NO								2	SMOKE	HOSE STATION
ELEVATOR			LUBRICANT	E	5	9.9E+04					
4002 AF 40604			CABLE INS	C	50	5.1E+05				SMOKE	HOSE STATION
SECURITY ROOM			PAPER	C	50	3.9E+05					
			TRASH	B	10	7.7E+04					
		65	NET CAT.	D	TOTAL:	9.8E+05	15000	14			
FIRE AREA TOTAL:		65	NET CAT.	C	TOTAL:	1.1E+06	16600	18			
4003 AF 01	NO								2/0	SMOKE	HOSE STATION
4003 AF 40340			CABLE INS	C	1530	1.6E+07					
DEMINERALIZED WATER			PAPER	C	100	7.7E+05					
DEOXYGENATING ROOM			WOOD	C	900	7.6E+06					
			PLASTIC	D	30	4.0E+05					
			TRASH	B	50	3.9E+05					
			LUBE OIL	E	7	1.1E+06					
			VOLATILES	E	10	1.4E+06					
		500	NET CAT.	D	TOTAL:	2.7E+07	54000	41			
4003 AF 40442			CABLE INS	C	180	1.8E+06					
BORIC ACID			PAPER	C	100	7.7E+05					
BATCHING ROOM			WOOD	C	600	5.0E+06					
			PLASTIC	D	50	6.6E+05					
			LUBRICANT	E	5	9.9E+04					
		730	NET CAT.	D	TOTAL:	8.4E+06	11500	8			
4003 AF 40503			CABLE INS	C	6200	6.3E+07					
LOWER SOUTH AIR			PAPER	C	500	3.9E+06					
HANDLING EQUIPMENT			RUBBER	D	300	3.7E+06					
ROOM, SECURITY ROOM			PLASTIC	D	300	4.0E+06					
			TRASH	B	5	3.9E+04					
			VOLATILES	E	10	1.4E+06					
		3070	NET CAT.	D	TOTAL:	7.6E+07	24800	23			

Table 9A-3 (Sheet 17 of 24)
Fire Protection Summary

Fire Area/Zone (1)	Safety Area?(2)	Floor Area Sq Ft	Combust. Material(3)	Fire Sev. Cat.	Amount	Heat Value (Btu)	Comb. Load, Btu/Sq Ft	Equiv. Dur. (Min)	Boundary Fire Res.(4) (Hours)	Detect. Cap.	Fixed Suppression Capability(5)
4003 AF 40601			CABLE INS	C	6200	6.3E+07					
UPPER SOUTH AIR			PAPER	C	10	7.7E+04					
HANDLING EQUIPMENT			RUBBER	D	100	1.2E+06					
ROOM			PLASTIC	D	300	4.0E+06					
			TRASH	B	5	3.9E+04					
			LUBE OIL	E	15	2.3E+06					
			VOLATILES	E	10	1.4E+06					
		3070	NET CAT.	D	TOTAL:	7.2E+07	24000	17			
FIRE AREA TOTAL:		7370	NET CAT.	D	TOTAL:	1.8E+08	24900	23			
4003 AF 02	NO								2	NONE	NONE
STAIRWELL S03			NEGLIGIBLE								
4031 AF 01	NO								2	SMOKE	HOSE STATION
4031 AF 40307			BATTERIES	A	120	2.4E+07					
BATTERY ROOM #1			CABLE INS	C	1000	1.0E+07					
		770	NET CAT.	C	TOTAL:	3.4E+07	44000				
4031 AF 40308			CABLE INS	C	2000	2.0E+07					
BATTERY CHARGER			PAPER	C	200	1.5E+06					
ROOM #1			PLASTIC	D	500	6.6E+06					
		740	NET CAT.	C	TOTAL:	2.9E+07	39000				
FIRE AREA TOTAL:		1510	NET CAT.	D	TOTAL:	6.3E+07	42000	31			
4031 AF 02	NO								2	SMOKE	HOSE STATION
4031 AF 40309			BATTERIES	A	120	2.4E+07					
BATTERY ROOM #2			CABLE INS	C	1000	1.0E+07					
		740	NET CAT.	C	TOTAL:	3.4E+07	46000				
4031 AF 40310			CABLE INS	C	2000	2.0E+07					
BATTERY CHARGER			PAPER	C	200	1.5E+06					
ROOM #2			PLASTIC	D	500	6.6E+06					
		720	NET CAT.	C	TOTAL:	2.9E+07	40000				
4031 AF 40411			CABLE INS	C	1000	1.0E+07					
COMPUTER ROOM B,			PLASTIC	D	100	1.3E+06					
SHIFT TURNOVER ROOM			WOOD	C	250	2.1E+06					
			CLOTH	B	50	4.0E+05					
		1315	NET CAT.	C	TOTAL:	1.4E+07	11000	8			
FIRE AREA TOTAL:		2135	NET CAT.	D	TOTAL:	7.7E+07	36000	27			

Table 9A-3 (Sheet 18 of 24)
Fire Protection Summary

Fire Area/Zone (1)	Safety Area?(2)	Floor Area Sq Ft	Combust. Material(3)	Fire Sev. Cat.	Amount	Heat Value (Btu)	Comb. Load, Btu/Sq Ft	Equiv. Dur. (Min)	Boundary Fire Res.(4) (Hours)	Detect. Cap.	Fixed Suppression Capability(5)
4031 AF 05	NO								2/0	SMOKE	HOSE STATION
4031 AF 40300			CABLE INS	C	1000	1.0E+07					
SECURITY ACCESS,			PAPER	C	1200	9.2E+06					
CONTROL AREA			PLASTIC	D	500	6.6E+06					
			WOOD	C	500	4.2E+06					
			CLOTH	B	200	1.6E+06					
		1920	NET CAT.	D	TOTAL:	3.2E+07	17000	12			
4031 AF 40303			CABLE INS	C	2000	2.0E+07					
CORRIDOR AND			PAPER	C	1000	7.7E+06					
RESTROOM			PLASTIC	D	500	6.6E+06					
			WOOD	C	500	4.2E+06					
			CLOTH	B	500	4.0E+06					
		1600	NET CAT.	D	TOTAL:	4.3E+07	27000	20			
FIRE AREA TOTAL:		3520	NET CAT.	D	TOTAL:	7.5E+07	21000	16			
4031 AF 06	NO								2	SMOKE	HOSE STATION
SECURITY AREA			CABLE INS	C	1075	1.1E+07					
			PAPER	C	200	1.5E+06					
			PLASTIC	D	175	2.3E+06					
			WOOD	C	500	4.2E+06					
			CLOTH	B	100	8.0E+05					
			TRASH	B	20	1.5E+05					
FIRE AREA TOTAL:		640	NET CAT.	D	TOTAL:	2.0E+07	31000	23			
4032 AF 01	NO								2/0	SMOKE	HOSE STATION
HEALTH PHYSICS AREA AND			CABLE INS	C	4000	4.1E+07					
SECURITY ACCESS			WOOD	C	3400	2.9E+07					
CONTROL AREA			PLASTIC	D	500	6.6E+06					
			RUBBER	D	50	6.1E+05					
			CLOTH	B	1000	8.0E+06					
			PAPER	C	4000	3.1E+07					
			TRASH	B	400	3.1E+06					
			VOLATILES	E	10	1.4E+06					
FIRE AREA TOTAL:		6280	NET CAT.	D	TOTAL:	1.2E+08	19000	14			
4032 AF 02	NO								2/0	SMOKE	HOSE STATION
CONTAINMENT ACCESS			CABLE INS	C	4800	4.9E+07					WET PIPE
CORRIDOR AND RADWASTE			PAPER	C	5000	3.9E+07					SPRINKLER
ACCESS CORRIDOR			PLASTIC	D	200	2.6E+06					
			FUEL OIL	E	100	1.4E+07					
			VOLATILES	E	50	6.8E+06					
FIRE AREA TOTAL:		2210	NET CAT.	D	TOTAL:	1.1E+08	50000	39			

Table 9A-3 (Sheet 19 of 24)
Fire Protection Summary

Fire Area/Zone (1)	Safety Area?(2)	Floor Area Sq Ft	Combust. Material(3)	Fire Sev. Cat.	Amount	Heat Value (Btu)	Comb. Load, Btu/Sq Ft	Equiv. Dur. (Min)	Boundary Fire Res.(4) (Hours)	Detect. Cap.	Fixed Suppression Capability(5)
4033 AF 01	NO								2/0	SMOKE	HOSE STATION
HOT MACHINE SHOP			ACETYLENE	E	150	3.2E+06					
			LUBE OIL	E	20	3.0E+06					
			WOOD	C	1500	1.3E+07					
			CABLE INS	C	3610	3.7E+07					
			LUBRICANT	E	30	5.9E+05					
			PLASTIC	D	150	2.0E+06					
			RUBBER	D	300	3.7E+06					
			CLOTH	B	100	8.0E+05					
			PAPER	C	50	3.9E+05					
			TRASH	B	50	3.9E+05					
			VOLATILES	E	20	2.7E+06					
FIRE AREA TOTAL:		2290	NET CAT.	E	TOTAL:	6.6E+07	29000	22			
4034 AF 01	NO								2/0	SMOKE	NONE
4034 AF 40311			CABLE INS	C	4000	4.0E+07					
CORRIDORS 40311, 40312,			CLOTH	B	1000	8.0E+06					
AND 40373			PAPER	C	2000	1.5E+07					
			PLASTIC	D	1000	1.3E+07					
			WOOD	C	1000	8.4E+06					
		3160	NET CAT.	C	TOTAL:	8.5E+07	26700	21			
4034 AF 40313 OFFICES			CABLE INS	C	100	1.0E+06					
			CLOTH	B	100	8.0E+05					
			PAPER	C	3500	2.7E+07					
			PLASTIC	D	125	1.6E+06					
			WOOD	C	250	2.1E+06					
		456	NET CAT.	C	TOTAL:	3.3E+07	72300	55			
4034 AF 40316			CABLE INS	C	1000	1.0E+07					
COMPUTER ROOM L1/2			PLASTIC	D	650	8.6E+06					
			WOOD	C	125	1.0E+06					
			CLOTH	B	50	4.0E+05					
		554	NET CAT.	C	TOTAL:	2.0E+07	36000	26			
4034 AF 40317			CABLE INS	C	1000	1.0E+07					
COMPUTER ROOM L3			PLASTIC	D	100	1.3E+06					
			WOOD	C	250	2.1E+06					
			CLOTH	B	50	4.0E+05					
		571	NET CAT.	C	TOTAL:	1.4E+07	24500	19			
4034 AF 40318			CABLE INS	C	500	5.0E+06					
ALARA BRIEFING AND			CLOTH	B	250	2.0E+06					
HP MONITORING ROOM			PAPER	C	2000	1.5E+07					
			PLASTIC	D	125	1.6E+06					
			WOOD	C	250	2.1E+06					
		799	NET CAT.	C	TOTAL:	2.7E+07	34000	25			

Table 9A-3 (Sheet 20 of 24)
Fire Protection Summary

Fire Area/Zone (1)	Safety Area?(2)	Floor Area Sq Ft	Combust. Material(3)	Fire Sev. Cat.	Amount	Heat Value (Btu)	Comb. Load, Btu/Sq Ft	Equiv. Dur. (Min)	Boundary Fire Res.(4) (Hours)	Detect. Cap.	Fixed Suppression Capability(5)
4034 AF 40320			CABLE INS	C	1000	1.0E+07					
WOMEN'S CHANGE ROOM			CLOTH	B	760	6.1E+06					
			PAPER	C	560	4.3E+06					
			PLASTIC	D	280	3.7E+06					
			TRASH	B	50	3.9E+05					
			WOOD	C	2300	1.9E+07					
		1230	NET CAT.	C	TOTAL:	4.4E+07	36000	26			
4034 AF 40322			CABLE INS	C	1000	1.0E+07					
MEN'S CHANGE ROOM			CLOTH	B	1740	1.4E+07					
			PAPER	C	1440	1.1E+07					
			PLASTIC	D	720	9.5E+06					
			TRASH	B	100	7.7E+05					
			WOOD	C	5500	4.6E+07					
		2860	NET CAT.	C	TOTAL:	9.2E+07	32000	24			
4034 AF 40370			CABLE INS	C	1000	1.0E+07					
KITCHEN, CONF. ROOMS,			CLOTH	B	500	4.0E+06					
REST ROOMS, CORRIDOR			PAPER	C	500	3.9E+06					
			PLASTIC	D	500	6.6E+06					
			TRASH	B	150	1.2E+06					
			WOOD	C	500	4.2E+06					
		1500	NET CAT.	C	TOTAL:	3.0E+07	20000	15			
4034 AF 40378			CABLE INS	C	575	5.7E+06					
OFFICE AREA WEST			CLOTH	B	575	4.6E+06					
			PAPER	C	20200	1.5E+08					
			PLASTIC	D	720	9.0E+06					
			WOOD	C	1440	1.2E+07					
		3165	NET CAT.	C	TOTAL:	1.8E+08	56875	46			
4034 AF 40379			CABLE INS	C	1320	1.3E+07					
OFFICE AREA EAST			CLOTH	B	1320	1.1E+07					
			PAPER	C	46200	3.6E+08					
			PLASTIC	D	1650	2.2E+07					
			WOOD	C	3300	2.8E+07					
		6700	NET CAT.	C	TOTAL:	4.3E+08	64800	55			
FIRE AREA TOTAL:		20995	NET CAT.	C	TOTAL	9.6E+08	45725	34			
4035 AF 01	NO		FUEL OIL	E	650	9.4E07			3/0	NONE	DRY PIPE
ANCILLARY DIESEL			LUBE OIL	E	16	2.4E06					SPRINKLERS
GENERATOR ROOM			CABLE INS	C	20	2.0E05					HOSE STATION
			PLASTIC	D	20	2.6E05					
			VOLATILES	E	10	1.4E06					
			CLOTH	B	10	8.0E04					
FIRE AREA TOTAL:		230	NET CAT.	E	TOTAL:	9.8E+07	426,000	320			

Table 9A-3 (Sheet 21 of 24)
Fire Protection Summary

Fire Area/Zone (1)	Safety Area?(2)	Floor Area Sq Ft	Combust. Material(3)	Fire Sev. Cat.	Amount	Heat Value (Btu)	Comb. Load, Btu/Sq Ft	Equiv. Dur. (Min)	Boundary Fire Res.(4) (Hours)	Detect. Cap.	Fixed Suppression Capability(5)
4041 AF 01	NO								2/0	SMOKE	HOSE STATION
4041 AF 40403			CABLE INS	C	4000	4.1E+07					
CONTROL SUPPORT AREA			PAPER	C	1500	1.2E+07					
			PLASTIC	D	200	2.6E+06					
			WOOD	C	1000	8.4E+06					
			CLOTH	B	50	4.0E+05					
			TRASH	B	20	1.5E+05					
		3660	NET CAT.	C	TOTAL:	6.4E+07	17000	13			
4041 AF 40410			CABLE INS	C	1000	1.0E+07					
COMPUTER ROOM A,			PLASTIC	D	100	1.3E+06					
CORRIDOR			WOOD	C	250	2.1E+06					
			CLOTH	B	50	4.0E+05					
		1315	NET CAT.	C	TOTAL:	1.4E+07	11000	8			
FIRE AREA TOTAL:		4975	NET CAT.	C	TOTAL:	7.8E+07	16000	12			
4041 AF 02	NO								2	SMOKE	HOSE STATION
CORRIDOR AND RESTROOM			CABLE INS	C	3000	3.1E+07					
			PLASTIC	D	20	2.6E+05					
			TRASH	B	20	1.5E+05					
FIRE AREA TOTAL:		1280	NET CAT.	C	TOTAL:	3.1E+07	24000	18			
4042 AF 01	NO								2/0	SMOKE	HOSE STATION
ELECTRICAL SWITCHGEAR			CABLE INS	C	10000	1.0E+08					
ROOM #1			PLASTIC	D	1100	1.5E+07					
FIRE AREA TOTAL		3260	NET CAT.	D	TOTAL:	1.2E+08	36000	27			
4042 AF 02	NO								2/0	SMOKE	HOSE STATION
ELECTRICAL SWITCHGEAR			CABLE INS	C	10000	1.0E+08					
ROOM #2			PLASTIC	D	1300	1.7E+07					
FIRE AREA TOTAL:		3230	NET CAT.	D	TOTAL:	1.2E+08	37000	28			
4051 AF 01	NO								2/0	SMOKE	HOSE STATION WET PIPE SPRINKLERS ROOM 40500 ONLY
NORTH AIR HANDLING			CABLE INS	C	12300	1.3E+08					
EQUIPMENT ROOM			PAPER	C	10	7.7E+04					
			LUBE OIL	E	20	3.0E+06					
			PLASTIC	D	350	4.6E+06					
			RUBBER	D	100	1.2E+06					
			TRASH	B	5	3.9E+04					
			VOLATILES	E	10	1.4E+06					
FIRE AREA TOTAL:		7310	NET CAT.	D	TOTAL:	1.4E+08	19000	14			

Table 9A-3 (Sheet 22 of 24)
Fire Protection Summary

Fire Area/Zone (1)	Safety Area?(2)	Floor Area Sq Ft	Combust. Material(3)	Fire Sev. Cat.	Amount	Heat Value (Btu)	Comb. Load, Btu/Sq Ft	Equiv. Dur. (Min)	Boundary Fire Res.(4) (Hours)	Detect. Cap.	Fixed Suppression Capability(5)
4052 AF 01	NO								2/0	SMOKE	HOSE STATION WET PIPE SPRINKLERS ROOM 40550 ONLY
4052 AF 40550 STAGING AND STORAGE AREAS			CABLE INS	C	10200	1.0E+08					
			PAPER	C	50	3.9E+05					
			LUBE OIL	E	20	3.0E+06					
			LUBRICANT	E	10	2.0E+05					
			PLASTIC	D	160	2.1E+06					
			RUBBER	D	50	6.1E+05					
			ACETYLENE	E	50	1.1E+06					
			TRASH	B	50	3.9E+05					
			VOLATILES	E	10	1.4E+06					
		8380	NET CAT.	D	TOTAL:	1.1E+08	14000				
4052 AF 40551 CONTAINMENT AIR FILTRATION EXHAUST ROOM A			CABLE INS	C	500	5.1E+06					CHARCOAL BED DELUGE
			CHARCOAL	C	2500	3.7E+07					
		600	NET CAT.	D	TOTAL:	4.2E+07	69000				
4052 AF 40552 CONTAINMENT AIR FILTRATION EXHAUST ROOM B			CABLE INS	C	500	5.1E+06					
			CHAROAL	C	2500	3.7E+07					
		600	NET CAT.	D	TOTAL:	4.2E+07	69000				
FIRE AREA TOTAL:		9580	NET CAT.	E	TOTAL:	2.0E+08	20500	15			
5031 AF 01	NO								0	SEE ZONE	SEE ZONE
5031 AF 50300 ELECTRICAL/MECHANICAL EQUIPMENT ROOM			CABLE INS	C	2200	2.2E+07				HEAT	HOSE STATION
			PLASTIC	D	200	2.6E+06					
			LUBE OIL	E	2	3.0E+05					
			VOLATILES	E	10	1.4E+06					
		1031	NET CAT.	E	TOTAL:	2.5E+07	25000	18			
5031 AF 50350 MOBILE SYSTEMS FACILITY			LUBE OIL	E	70	1.1E+07				HEAT	PREACTION SPRINKLERS HOSE STATION
			LUBRICANT	E	20	4.0E+05					
			CABLE INS	C	4300	4.4E+07					
			CLOTH	B	70	5.6E+05					
			PLASTIC	D	250	3.3E+06					
			BATTERIES	A	1	2.0E+05					
			GASOLINE	E	60	7.7E+06					
			WOOD	C	400	3.4E+06					
			RUBBER	D	1400	1.7E+07					
			VOLATILES	E	10	1.4E+06					
			ACETYLENE	E	30	6.5E+05					
		6300	NET CAT.	E	TOTAL:	8.9E+07	14000	11			
5031 AF 50351 WASTE ACCUMULATION ROOM			LUBE OIL	E	300	4.5E+07				HEAT	PREACTION SPRINKLERS HOSE STATION
			CABLE INS	C	1500	1.5E+07					
			CLOTH	B	10000	8.0E+07					
			PAPER	C	2500	1.9E+07					
			TRASH	B	31000	2.4E+08					
			PLASTIC	D	500	6.6E+06					
			WOOD	C	400	3.4E+06					
			RUBBER	D	500	6.1E+06					
			VOLATILES	E	10	1.4E+06					
		1500	NET CAT.	E	TOTAL:	4.2E+08	277000	208			

Table 9A-3 (Sheet 23 of 24)
Fire Protection Summary

Fire Area/Zone (1)	Safety Area?(2)	Floor Area Sq Ft	Combust. Material(3)	Fire Sev. Cat.	Amount	Heat Value (Btu)	Comb. Load, Btu/Sq Ft	Equiv. Dur. (Min)	Boundary Fire Res.(4) (Hours)	Detect. Cap.	Fixed Suppression Capability(5)
5031 AF 50352			CABLE INS	C	500	5.1E+06				HEAT	PREACTION
PACKAGED WASTE			PLASTIC	D	50	6.6E+05					SPRINKLERS
STORAGE			WOOD	C	400	3.4E+06					HOSE STATION
		810	NET CAT.	D	TOTAL:	9.1E+06	11000	8			
5031 AF 50353			CABLE INS	C	1100	1.1E+07				HEAT	HOSE STATION
HVAC EQUIPMENT ROOM			PLASTIC	D	20	2.6E+05					
			LUBE OIL	E	2	3.0E+05					
			VOLATILES	E	10	1.4E+06					
		840	NET CAT.	D	TOTAL:	1.3E+07	16000	11			
5031 AF 50354			CABLE INS	C	400	4.1E+06				HEAT	PREACTION
TRUCK STAGING AREA			PLASTIC	D	20	2.6E+05					SPRINKLERS
			LUBE OIL	E	2	3.0E+05					HOSE STATION
			VOLATILES	E	10	1.4E+06					
			FUEL OIL	E	100	1.4E+07					
		792	NET CAT.	E	TOTAL:	2.0E+07	26000	19			
5031 AF 50355			CABLE INS	C	1600	1.6E+07				NONE	HOSE STATION
MONITOR TANK ROOM			VOLATILES	E	40	5.4E+06					
			LUBE OIL	E	5	7.6E+05					
		1210	NET CAT.	E	TOTAL:	2.3E+07	18600	14			
FIRE AREA TOTAL:		12483	NET CAT.	E	TOTAL:	6.0E+08	47805	36			
6030 AF 01	NO								3/0	SEE ZONE	SEE ZONE
6030 AF 60310			CABLE INS	C	1000	1.0E+07				NONE	DRY PIPE
DIESEL GENERATOR			FUEL OIL	E	100	1.4E+07					SPRINKLERS
ROOM A			LUBE OIL	E	500	7.6E+07					HOSE STATION
		1450	NET CAT.	E	TOTAL:	1.0E+08	69000	52			
6030 AF 60311			CABLE INS	C	2000	2.0E+07				SMOKE	HOSE STATION
SERVICE MODULE A			PAPER	C	100	7.7E+05					
		300	NET CAT	C	TOTAL:	2.1E+07	71000	62			
6030 AF 60313			CABLE INS	C	500	5.1E+06				NONE	HOSE STATION
COMBUSTION AIR CLEANER			PAPER	C	1000	7.7E+06					
AREA A		290	NET CAT.	C	TOTAL:	1.3E+07	44000	33			
FIRE AREA TOTAL:		2040	NET CAT.	E	TOTAL:	1.3E+08	66000	49			
6030 AF 02	NO								3/0	SEE ZONE	SEE ZONE
6030 AF 60320			CABLE INS	C	1000	1.0E+07				NONE	DRY PIPE
DIESEL GENERATOR			FUEL OIL	E	100	1.4E+07					SPRINKLERS
ROOM B			LUBE OIL	E	500	7.6E+07					HOSE STATION
		1450	NET CAT.	E	TOTAL:	1.0E+08	69000	52			
6030 AF 60321			CABLE INS	C	2000	2.0E+07				SMOKE	HOSE STATION
SERVICE MODULE B			PAPER	C	100	7.7E+05					
		300	NET CAT.	C	TOTAL:	2.1E+07	71000	62			
6030 AF 60323			CABLE INS	C	500	5.1E+06				NONE	HOSE STATION
COMBUSTION AIR CLEANER			PAPER	C	1000	7.7E+06					
AREA B		290	NET CAT.	C	TOTAL:	1.3E+07	44000	33			

Table 9A-3 (Sheet 24 of 24)
Fire Protection Summary

Fire Area/Zone (1)	Safety Area?(2)	Floor Area Sq Ft	Combust. Material(3)	Fire Sev. Cat.	Amount	Heat Value (Btu)	Comb. Load, Btu/Sq Ft	Equiv. Dur. (Min)	Boundary Fire Res.(4) (Hours)	Detect. Cap.	Fixed Suppression Capability(5)
6030 AF 04	NO								3	NONE	DRY PIPE SPRINKLERS HOSE STATION
DIESEL FUEL DAY TANK VAULT B			FUEL OIL	E	1500	2.2E+08					
FIRE AREA TOTAL:		100	NET CAT.	E	TOTAL:	2.2E+08	2160000	1620			
6001 AF 01	NO								2	NONE	NONE
STAIRWELL			NEGLIGIBLE								
6030 AF 603214 TOOL STORAGE AREA			CABLE INS	C	100	1.0E+06				NONE	HOSE STATION
			PAPER	C	50	3.9E+05					
			PLASTIC	D	50	6.6E+05					
			WOOD	C	100	8.4E+05					
		144	NET CAT.	C	TOTAL:	2.9E+06	20070	15			
6030 AF 60330 SECURITY ROOM			CABLE INS	C	2000	2.0E+06				NONE	HOSE STATION
			TRASH	B	100	1.9E+05					
			PAPER	C	1000	7.7E+05					
			PLASTIC	D	1000	3.3E+05					
		144	NET CAT.	C	TOTAL:	3.6E+06	25200	19			
FIRE AREA TOTAL:		2328	NET CAT.	E	TOTAL:	1.4E+08	60140	45			
6030 AF 03	NO								3	NONE	DRY PIPE SPRINKLERS HOSE STATION
DIESEL FUEL DAY TANK VAULT A			FUEL OIL	E	1500	2.2E+08					
FIRE AREA TOTAL:		100	NET CAT.	E	TOTAL:	2.2E+08	2160000	1620			

Note:

1. The first four digits of the fire area and fire zone numbers indicate the building, level and building area in which the fire area/zone is located. When the third or fourth digit is a zero, the fire area/zone spans more than one level or building area. The last two digits in a fire area number are a sequence number only. The last five digits in a fire zone number coincide with the room number of a prominent room in the fire zone.
2. A YES indication in the Safety Area column means that one or more safety-related components are located in the fire area.
3. Estimated quantities of combustible materials are shown. Where the presence of transient combustibles is anticipated, their presence is indicated by the listing of volatiles or trash. The units and heat of combustion values for the combustible materials are shown in Table 9A-1.
4. The boundary fire resistance for each fire area represents the minimum resistance, in hours, for the surrounding walls, floor, and ceiling, except that:
   - •A non-rated barrier capable of qualifying as a three-hour barrier is considered to have a resistance of three hours, provided that penetrations are adequately sealed.
   - •Stairwells, elevator shafts and the like, which are enclosed by two-hour (minimum) fire barrier walls, may comprise a portion of the boundary of a fire area having a three hour resistance.
   - •Building exterior walls below grade (soil on the outside) are considered to have a fire resistance of at least three hours even though they are not fire-rated.

   A boundary fire resistance designation such as "3/0" indicates that part of the fire area boundary consists of nonrated building exterior walls/roof above grade, but that the minimum resistance of the fire barriers separating the fire area from adjacent fire areas is three hours. For detailed information about the fire resistance of fire area boundaries see Figures 9A-1 through 9A-6.
5. The fixed suppression capability is indicated for each fire area. Unless otherwise indicated, sprinkler and spray systems are automatic. Where a hose station is indicated, one or more hose streams are available. In addition to fixed suppression capability, portable extinguishers are provided throughout the plant.
6. Partial suppression coverage in this zone. See Section 9A.3, Fire Protection Analysis Results, for details.
7. Wet pipe sprinklers for fire zone 2060 AF 20600 are provided for the turbine generator where oil piping is routed (for example, under lagging, at the turbine generator bearing seals, and in the exciter).

Table 9A-4
Ventilation Systems Serving Fire Areas Containing Class 1E Components

Ventilation Systems Serving Fire Areas Containing Class 1E Division A and C Components				
Fire Area	**RCA**	**Class 1E Components**	**Ventilation System - Subsystem**	**Distribution Header**
1202 AF 04	No	Division A batteries and equipment	VBS - A&C	AC-1
1242 AF 02	No	Division A equipment and penetrations	VBS - A&C	AC-1
1202 AF 03	No	Division C batteries, equipment & penetrations	VBS - A&C	AC-2
1230 AF 01	No	Division A & C cable only	VBS - B&D	BD-3
1240 AF 01	No	Division A & C cable only	VXS - Equip. room	Aux. building
1200 AF 01	Yes	Division A valves; division A & C cable	VAS - Aux/annex	Aux/annex
1200 AF 02	Yes	Division A & C cable only	VAS - Fuel handling	Fuel handling
Ventilation Systems Serving Fire Areas Containing Class 1E Division B and D Components				
Fire Area	**RCA**	**Class 1E Components**	**Ventilation System - Subsystem**	**Distribution Header**
1201 AF 02	No	Division B batteries, equipment & penetrations	VBS - B&D	BD-1
1201 AF 03	No	Division D batteries, equipment & penetrations	VBS - B&D	BD-2
1201 AF 04	No	Division D valves	VBS - B&D	BD-Common
1200 AF 03	No	Division B & D cable only	VBS - A&C	AC-3
1220 AF 01	No	Division B equipment; division B & D cable	VBS - A&C	AC-3
1201 AF 05	No	Division B & D valves & instrumentation	VXS	Self-contained
1201 AF 06	No	Division B & D valves & instrumentation	VXS	Self-contained
1230 AF 02	No	Division B & D cable only	VXS - Equip. Room	Aux. building
1220 AF 02	Yes	Division D valves	VAS - Aux/annex	Aux. building
Ventilation Systems Serving Principal Class 1E Fire Areas				
Fire Area	**RCA**	**Description**	**Ventilation System - Subsystem**	**Distribution Header**
1242 AF 01	No	Main control room	VBS - MCR/CSA	MCR
1232 AF 01	No	Remote shutdown room	VBS - B&D	BD-3
1210 AF 01	No	Spare battery fire area	VBS - A&C	AC-3
1243 AF 01	No	Reactor trip switchgear I	VXS - Equip. room	Aux. building
1243 AF 02	No	Reactor trip switchgear II	VXS - Equip. room	Aux. building
1000 AF 01	Yes	Containment/shield building	VFS	A and B

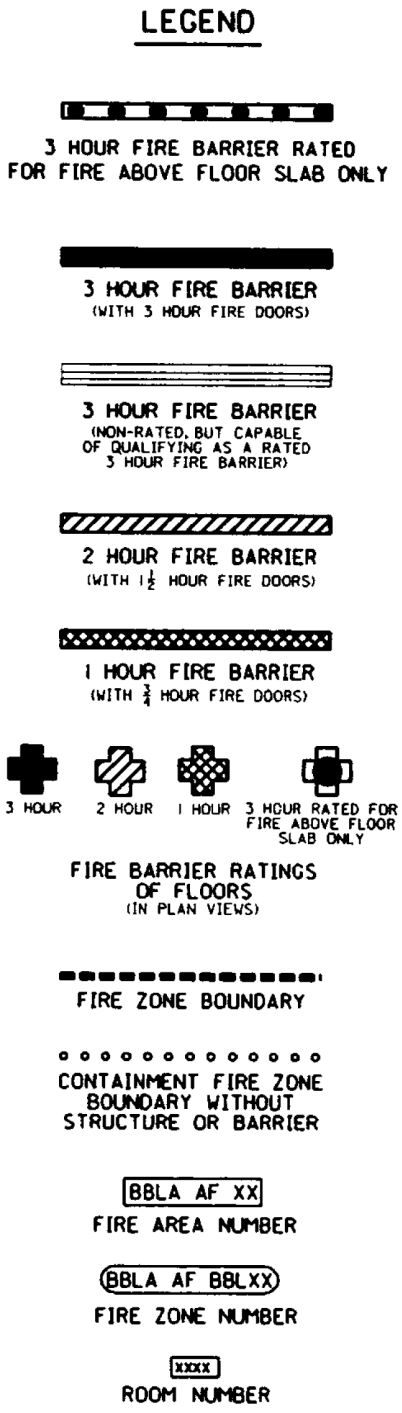

Figure 9A-1 (Sheet 1 of 16)
[*Fire Areas Legend*]*

*NRC Staff approval is required prior to implementing a change in this information.

Security-Related Information, Withheld Under 10 CFR 2.390d

Figure 9A-1 (Sheet 2 of 16)
[*Nuclear Island Fire Area Plan at Elevation 66'-6"*]*

*NRC Staff approval is required prior to implementing a change in this information.

Security-Related Information, Withheld Under 10 CFR 2.390d

Figure 9A-1 (Sheet 3 of 16)
[*Nuclear Island Fire Area Plan at Elevation 82'-6"*]*

*NRC Staff approval is required prior to implementing a change in this information.

Security-Related Information, Withheld Under 10 CFR 2.390d

Figure 9A-1 (Sheet 4 of 16)
[*Nuclear Island Fire Area Plan at Elevation 96'-6"*]*

*NRC Staff approval is required prior to implementing a change in this information.

Security-Related Information, Withheld Under 10 CFR 2.390d

Figure 9A-1 (Sheet 5 of 16)
**[*Nuclear Island Fire Areas*
Plan at Elevation 100'-0" & 107'-2"*]

*NRC Staff approval is required prior to implementing a change in this information.

Security-Related Information, Withheld Under 10 CFR 2.390d

Figure 9A-1 (Sheet 6 of 16)
[*Nuclear Island Fire Area Plan at Elevation 117'-6"*]*

*NRC Staff approval is required prior to implementing a change in this information.

Security-Related Information, Withheld Under 10 CFR 2.390d

Figure 9A-1 (Sheet 7 of 16)
[*Nuclear Island Fire Area Plan at Elevation 135'-3"*]*

*NRC Staff approval is required prior to implementing a change in this information.

Security-Related Information, Withheld Under 10 CFR 2.390d

Figure 9A-1 (Sheet 8 of 16)
**[*Nuclear Island Fire Areas*
Plan at Elevation 153'-0" & 160'-6"*]

*NRC Staff approval is required prior to implementing a change in this information.

Security-Related Information, Withheld Under 10 CFR 2.390d

Figure 9A-1 (Sheet 9 of 16)
**[*Nuclear Island Fire Areas*
Plan at Elevation 160'-6" & 180'-0"*]

*NRC Staff approval is required prior to implementing a change in this information.

Security-Related Information, Withheld Under 10 CFR 2.390d

Figure 9A-1 (Sheet 10 of 16)
[*Nuclear Island Fire Area Section A-A*]*

*NRC Staff approval is required prior to implementing a change in this information.

Security-Related Information, Withheld Under 10 CFR 2.390d

Figure 9A-1 (Sheet 11 of 16)
[*Nuclear Island Fire Area Section B-B*]*

*NRC Staff approval is required prior to implementing a change in this information.

Security-Related Information, Withheld Under 10 CFR 2.390d

Figure 9A-1 (Sheet 12 of 16)
**[*Nuclear Island Fire Areas*
Section C-C & H-H*]

*NRC Staff approval is required prior to implementing a change in this information.

Security-Related Information, Withheld Under 10 CFR 2.390d

Figure 9A-1 (Sheet 13 of 16)
[*Nuclear Island Fire Area Section G-G*]*

*NRC Staff approval is required prior to implementing a change in this information.

Security-Related Information, Withheld Under 10 CFR 2.390d

Figure 9A-1 (Sheet 14 of 16)
[*Nuclear Island Fire Area Section J-J*]*

*NRC Staff approval is required prior to implementing a change in this information.

Security-Related Information, Withheld Under 10 CFR 2.390d

Figure 9A-1 (Sheet 15 of 16)
[*Nuclear Island Fire Area Section K-K*]*

*NRC Staff approval is required prior to implementing a change in this information.

Security-Related Information, Withheld Under 10 CFR 2.390d

Figure 9A-1 (Sheet 16 of 16)
**[*Nuclear Island Fire Areas*
Section I-I & R-R*]

*NRC Staff approval is required prior to implementing a change in this information.

Security-Related Information, Withheld Under 10 CFR 2.390d

Figure 9A-2 (Sheet 1 of 5)
[*Turbine Building Fire Area Plan at Elevation 100'-0"*]*

*NRC Staff approval is required prior to implementing a change in this information.

Security-Related Information, Withheld Under 10 CFR 2.390d

Figure 9A-2 (Sheet 2 of 5)
[*Turbine Building Fire Area Plan at Elevation 117'-6"*]*

*NRC Staff approval is required prior to implementing a change in this information.

Security-Related Information, Withheld Under 10 CFR 2.390d

Figure 9A-2 (Sheet 3 of 5)
[*Turbine Building Fire Area Plan at Elevation 135'-3"*]*

*NRC Staff approval is required prior to implementing a change in this information.

Security-Related Information, Withheld Under 10 CFR 2.390d

Figure 9A-2 (Sheet 4 of 5)
[*Turbine Building Fire Area Plan at Elevation 161'-0"*]*

*NRC Staff approval is required prior to implementing a change in this information.

Security-Related Information, Withheld Under 10 CFR 2.390d

Figure 9A-2 (Sheet 5 of 5)
**[*Turbine Building Fire Areas*
Plan at Elevation 245'-0" & 226'-10"*]

*NRC Staff approval is required prior to implementing a change in this information.

Security-Related Information, Withheld Under 10 CFR 2.390d

Figure 9A-3 (Sheet 1 of 3)
[*Annex I & II Building Fire Areas Plan at Elevation 100'-0" & 107'-2"*]*

*NRC Staff approval is required prior to implementing a change in this information.

Security-Related Information, Withheld Under 10 CFR 2.390d

Figure 9A-3 (Sheet 2 of 3)
[*Annex I & II Building Fire Area Plan at Elevation 117'-6"*]*

*NRC Staff approval is required prior to implementing a change in this information.

Security-Related Information, Withheld Under 10 CFR 2.390d

Figure 9A-3 (Sheet 3 of 3)
[*Annex I & II Building Fire Area Plan at Elevation 135'-3"*]*

*NRC Staff approval is required prior to implementing a change in this information.

Security-Related Information, Withheld Under 10 CFR 2.390d

Figure 9A-4
[*Radwaste Building Fire Area Plan at Elevation 100'-0"*]*

*NRC Staff approval is required prior to implementing a change in this information.

Security-Related Information, Withheld Under 10 CFR 2.390d

Figure 9A-5
[*Diesel Generator Building Fire Area Plan at Elevation 100'-0"*]*

*NRC Staff approval is required prior to implementing a change in this information.