IFSAR Table of Contents

Chapter 1 — Introduction and General Description of the Plant

Chapter 2 — Site Characteristics

Chapter 3 — Design of Structures, Components, Equipment and Systems

Chapter 4 — Reactor

Chapter 5 — Reactor Coolant System and Connected Systems

Chapter 6 — Engineered Safety Features

Chapter 7 — Instrumentation and Controls

Chapter 8 — Electric Power

Chapter 9 — Auxiliary Systems

Chapter 10 — Steam and Power Conversion

Chapter 11 — Radioactive Waste Management

Chapter 12 — Radiation Protection

Chapter 13 — Conduct of Operation

Chapter 14 — Initial Test Program

Chapter 15 — Accident Analyses

Chapter 16 — Technical Specifications

Chapter 17 — Quality Assurance

Chapter 18 — Human Factors Engineering

Chapter 19 — Probabilistic Risk Assessment

IFSAR Formatting Legend

Color	Description
	Original Westinghouse AP1000 DCD Revision 19 content (part of plant-specific DCD)
	Departures from AP1000 DCD Revision 19 content (part of plant-specific DCD)
	Standard FSAR content
	Site-specific FSAR content
	Linked cross-references (chapters, appendices, sections, subsections, tables, figures, and references)

TABLE OF CONTENTS

Section	Title	Page
CHAPTER 8	ELECTRIC POWER	8.1-1
8.1	Introduction	8.1-1
8.1.1	Utility Grid Description	8.1-1
8.1.2	Onsite Power System Description	8.1-1
8.1.3	Safety-Related Loads	8.1-2
8.1.4	Design Basis	8.1-3
8.1.4.1	Offsite Power System	8.1-3
8.1.4.2	Onsite Power System	8.1-3
8.1.4.3	Design Criteria, Regulatory Guides, and IEEE Standards	8.1-4
8.1.5	Combined License Information	8.1-5
8.2	Offsite Power System	8.2-1
8.2.1	System Description	8.2-1
8.2.1.1	Transmission Switchyard	8.2-2
8.2.1.2	Transformer Area	8.2-5
8.2.1.3	Switchyard Control Building	8.2-7
8.2.1.4	Switchyard and Transmission Lines Testing and Inspection	8.2-7
8.2.2	Grid Stability	8.2-8
8.2.3	Conformance to Criteria	8.2-11
8.2.4	Standards and Guides	8.2-11
8.2.5	Combined License Information for Offsite Electrical Power	8.2-11
8.2.6	References	8.2-11
8.3	Onsite Power Systems	8.3-1
8.3.1	AC Power Systems	8.3-1
8.3.1.1	Description	8.3-1
8.3.1.2	Analysis	8.3-12
8.3.1.3	Raceway/Cable	8.3-12
8.3.1.4	Inspection and Testing	8.3-13
8.3.2	DC Power Systems	8.3-14
8.3.2.1	Description	8.3-14
8.3.2.2	Analysis	8.3-18
8.3.2.3	Physical Identification of Safety-Related Equipment	8.3-19
8.3.2.4	Independence of Redundant Systems	8.3-20
8.3.2.5	Inspection and Testing	8.3-22
8.3.3	Combined License Information for Onsite Electrical Power	8.3-23
8.3.4	References	8.3-24

LIST OF TABLES

Table Number	Title	Page
8.1-1	Criteria and Guidelines for Electric Power Systems	8.1-6
8.1-201	Not Used	8.1-10
8.2-201	Grid Stability Interface Evaluation	8.2-13
8.3.1-1	(Sheet 1 of 5) Onsite Standby Diesel Generator ZOS MG 02A Nominal Loads	8.3-26
8.3.1-2	(Sheet 1 of 4) Onsite Standby Diesel Generator ZOS MG 02B Nominal Loads	8.3-31
8.3.1-3	Component Data - Main AC Power System (Nominal Values)	8.3-36
8.3.1-4	Post-72 Hours Nominal Load Requirements	8.3-37
8.3.1-5	Indication and Alarm Points Standby Diesel Generators	8.3-38
8.3.2-1	250V DC Class 1E Division A Battery Nominal Load Requirements	8.3-39
8.3.2-2	250V DC Class 1E Division B Battery Nominal Load Requirements	8.3-40
8.3.2-3	250V DC Class 1E Division C Battery Nominal Load Requirements	8.3-41
8.3.2-4	250V DC Class 1E Division D Battery Nominal Load Requirements	8.3-42
8.3.2-5	Component Data - Class 1E DC System (Nominal Values)	8.3-43
8.3.2-6	(Sheet 1 of 2) Component Data - Non-Class 1E DC System EDS1 – EDS4 (Nominal Values)	8.3-44
8.3.2-7	(Sheet 1 of 4) Class 1E 250V DC and Class 1E Uninterruptible Power Supplies Failure Modes and Effects Analysis	8.3-46

LIST OF FIGURES

Figure Number	Title	Page
8.2-201	Offsite Power System One-Line Diagram	8.2-14
8.2-202	Switchyard General Arrangement	8.2-15
8.3.1-1	AC Power Station One Line Diagram	8.3-50
8.3.1-2	Onsite Standby Diesel Generator Initiating Circuit Logic Diagram	8.3-51
8.3.1-3	Post-72-Hour Temporary Electric Power One Line Diagram	8.3-52
8.3.1-4	(Sheet 1 of 2) Diesel Generator System Piping and Instrumentation Diagram	8.3-53
8.3.1-4	(Sheet 2 of 2) Diesel Generator System Piping and Instrumentation Diagram	8.3-54
8.3.1-5	(Sheet 1 of 2) Diesel Engine Skid Mounted System	8.3-55
8.3.1-5	(Sheet 2 of 2) Diesel Engine Skid Mounted System	8.3-56
8.3.2-1	(Sheet 1 of 2) Class 1E DC System One Line Diagram	8.3-57
8.3.2-1	(Sheet 2 of 2) Class 1E DC System One Line Diagram	8.3-58
8.3.2-2	Class 1E 208y/120V UPS One Line Diagram	8.3-59
8.3.2-3	(Sheet 1 of 3) Non-Class 1E DC & UPS System One Line Diagram	8.3-60
8.3.2-3	(Sheet 2 of 3) Non-Class 1E DC & UPS System One Line Diagram	8.3-61
8.3.2-3	(Sheet 3 of 3) Non-Class 1E DC & UPS System One Line Diagram	8.3-62

Chapter 8 Electric Power

8.1 Introduction

8.1.1 Utility Grid Description

FPL owns and operates the power transmission system for Turkey Point Units 6 & 7. FPL is the largest investor-owned electric utility in Florida, serving more than 4.4 million customers. The FPL power transmission system consists of transmission lines and substations that link the various generation facilities, load centers, and grid interties within the FPL service territory at various voltages ranging from 69 kV to 500 kV. FPL maintains multiple direct interconnections with neighboring utilities. FPL also participates as a member of the Florida Reliability Coordinating Council and the North American Electric Reliability Corporation.

The plant switchyard (Clear Sky substation) on the Turkey Point plant area is used to transmit the electric power output from Units 6 & 7 to the FPL transmission system. The switchyard also serves as the units' preferred and maintenance source. The switchyard has two sections. The nominal operating voltage of these sections is 230 kV and 500 kV. These sections are interconnected with 230 kV/500 kV autotransformers. The 230 kV section of the plant switchyard is configured in a breaker-and-a-half bus arrangement, whereas the configuration of the 500 kV section of the switchyard is a double-breaker and a double-bus arrangement. The transmission system is connected to the Clear Sky substation through two 500 kV and two 230 kV transmission lines. Additionally, there is a 230 kV tie-line between the Clear Sky substation and the Turkey Point substation.

8.1.2 Onsite Power System Description

The onsite power system is comprised of the main ac power system and the dc power system. The main ac power system is a non-Class 1E system. The dc power system consists of two independent systems: Class 1E dc system and non-Class 1E dc system. The ac and dc onsite power system configurations are shown on Figures 8.3.1-1 and 8.3.2-1, 8.3.2-2 and 8.3.2-3, respectively.

The normal ac power supply to the main ac power system is provided from the station main generator. When the main generator is not available, plant auxiliary power is provided from the switchyard by backfeeding through the main stepup and unit auxiliary transformers. This is the preferred power supply. When neither the normal or the preferred power supply is available due to an electrical fault at either the main stepup transformer, unit auxiliary transformer, isophase bus, or 6.9kv nonsegregated bus duct, fast bus transfer will be initiated to transfer the loads to the reserve auxiliary transformers powered by maintenance sources of power. In addition, two non-Class 1E onsite standby diesel generators supply power to selected loads in the event of loss of the normal, preferred, and maintenance power sources. The reserve auxiliary transformers also serve as a source of maintenance power. The maintenance sources are as described.

The main generator is connected to the offsite power system by three single-phase stepup transformers. The normal power source for the plant auxiliary ac loads comes from the generator bus through two unit auxiliary transformers of identical rating. In the event of a loss of the main generator, the power is maintained without interruption from the preferred power supply by an autotrip of the main generator breaker. Power then flows from the switchyard to the auxiliary loads through the main and unit auxiliary transformers.

A spare single-phase main stepup transformer is provided in the transformer area. The spare can be placed in service upon failure of one phase of the main stepup transformers.

The onsite standby power system, powered by the two onsite standby diesel generators, supplies power to selected loads in the event of loss of other ac power sources. Loads that are priority loads for investment protection due to their specific functions (permanent nonsafety loads) are selected for access to the onsite standby power supply. Availability of the standby power source is not required to accomplish any safety function.

The maintenance power supplies are provided at the medium voltage (6.9 kV) buses through normally open circuit breakers. Bus transfer to maintenance source either is automatic under fast bus transfer logic or may be initiated manually.

Four independent divisions of Class 1E 250 Vdc battery systems are provided for the Class 1E dc and UPS system. Divisions B and C have two battery banks; one battery bank is sized to supply power to safety-related loads for at least 24 hours and the other battery bank is sized to supply power to a second set of safety-related loads for at least 72 hours following a design basis event (including the loss of all ac power). Divisions A and D have one 24-hour battery bank. The loads are assigned to each battery bank, depending on their required function, during the 72 hour coping period so that no manual or automatic load shedding is required for the first 24 hours. Two ancillary diesel generators are provided for power for Class 1E post-accident monitoring, MCR lighting, MCR and I&C room ventilation, and power to refill the PCS water storage tank and spent fuel pool if no other sources of ac power are available.

A single spare Class 1E battery bank is provided for both Class 1E and non-Class 1E battery systems and a separate spare charger is provided for each of the systems. In order to preserve independence of each Class 1E dc system division, plug-in locking type disconnects are permanently installed to prevent connection of more than one battery bank to the spare. In addition, kirk-key interlock switches are provided to prevent transfer operation of more than one switchboard at a time. The spare battery bank is located in a separate room and is capable of supplying power to the required loads on any battery being temporarily replaced with the spare.

The non-Class 1E 125 Vdc power system provides continuous, reliable power to the plant nonsafety-related dc loads. Operation of the non-Class 1E dc system is not required to accomplish any safety function.

Uninterruptible power supplies (UPS) to the four independent divisions of the Class 1E 120 Vac instrument buses are included in the Class 1E dc system. The normal power to the uninterruptible power supply comes from the respective Class 1E 250 Vdc bus. The backup power comes from the main ac power system through Class 1E 480-208Y/120V voltage regulating transformers. The same configuration applies for the uninterruptible power to the non-divisional, non-Class 1E 120 Vac instrument buses. The normal power to the non-Class 1E uninterruptible power supply comes from the non-Class 1E 125 Vdc bus and the backup power comes from the main ac power system through a voltage regulating transformer.

8.1.3 Safety-Related Loads

The safety-related loads requiring Class 1E power are listed in Tables 8.3.2-1, 8.3.2-2, 8.3.2-3 and 8.3.2-4. Safety-related loads are powered from the Class 1E 250 Vdc batteries and the associated Class 1E 120 Vac instrument buses.

8.1.4 Design Basis

8.1.4.1 Offsite Power System

Offsite power has no safety-related function due to the passive design of the AP1000. Therefore, redundant offsite power supplies are not required. The design provides a reliable offsite power system that minimizes challenges to the passive safety system.

8.1.4.2 Onsite Power System

8.1.4.2.1 Safety Design Basis

- The Class 1E dc and UPS power system meets the single failure criterion (GDC 17).
- The Class 1E dc and UPS system has sufficient capacity to achieve and maintain safe shutdown of the plant for 72 hours following a complete loss of all ac power sources without requiring load shedding for the first 24 hours.
- The Class 1E dc and UPS system is divided into four independent divisions. Any three-out-of-four divisions can shut down the plant safely and maintain it in a safe shutdown condition.
- Separation criteria preserve the independence of redundant Class 1E circuits as described in Subsection 8.3.2.4 and no single credible event is capable of disabling redundant safety-related systems.
- Special identification criteria are applied for Class 1E equipment, cabling, and raceways as described in Subsection 8.3.2.3.
- The Class 1E systems and equipment are designed to permit periodic inspection and testing (GDC-18).
- The Class 1E dc and UPS power system permits connection of any one 250 Vdc switchboard at a time to the spare battery and the spare battery charger. The spare battery and charger have sufficient capacity to permit continuous plant operation at 100-percent power in case of a failure or unavailability of one Class 1E battery bank and the associated battery charger.
- Two ancillary diesel generators provide ac power for Class 1E post-accident monitoring, MCR lighting, MCR and I&C room ventilation, and power to refill the PCS water storage tank and spent fuel pool if no other sources of power are available. The equipment used to perform this function is not safety-related because it is not needed for a prolonged period following a loss of ac and it is easily replaced with transportable generators.

8.1.4.2.2 Power Generation Design Basis

- The main ac power system is a non-Class 1E system and nonsafety-related. The normal power supply to the main ac power system comes from the station main generator through two identically rated unit auxiliary transformers and an additional unit auxiliary transformer for the electric auxiliary boiler and as described site-specific loads.
- The onsite standby power system supplies ac power to the selected permanent nonsafety loads in the event of a main generator trip concurrent with the loss of preferred power source and maintenance power source when under fast bus transfer conditions. The onsite standby diesel generators are automatically connected to the associated 6.9 kV buses upon loss of

bus voltage only after the generator rated voltage and frequency is established. Loads that are important for orderly plant shutdown are sequentially connected as shown in Subsection 8.3.1 during this event.

The permanent nonsafety loads are not required for the plant safe shutdown; therefore, the onsite standby power system is a nonsafety-related system and non-Class 1E.

- For continued operation of the plant, a spare single-phase main transformer can be placed in service upon failure of one phase of the main stepup transformers.

8.1.4.3 Design Criteria, Regulatory Guides, and IEEE Standards

Refer to Table 8.1-1 for guidelines, and their applicability to Chapter 8.

The offsite and onsite ac power systems have no safety function and, therefore, their conformance to General Design Criteria, Regulatory Guides and IEEE Standards is not required, except as indicated in Table 8.1-1.

Offsite and onsite ac power systems' conformance to Regulatory Guide (RGs) and IEEE standards identified by Table 8.1-1 as site-specific and to other applicable RGs is as indicated in Table 8.1-1.

The Class 1E dc power system design is based on the following:

- General Design Criteria (GDC)

  See Section 3.1 for a discussion of conformance to the General Design Criterion.

- Nuclear Regulatory Commission (NRC) Regulatory Guides

  See Section 1.9 for the list and details of conformance to the regulatory guides.

- IEEE Standards.

  The Class 1E dc power system design is based on the following IEEE Standards that are generally acceptable to the NRC as stated in the referenced Regulatory Guides:

  – IEEE 308-1991, IEEE Standard Criteria for Class 1E Power Systems for Nuclear Power Generating Stations. Refer to Regulatory Guide 1.32.

  – IEEE 317-1983, IEEE Standard for Electrical Penetration Assemblies in Containment Structures for Nuclear Power Generating Stations. Refer to Regulatory Guide 1.63.

  – IEEE 323-1974, IEEE Standard for Qualifying Class 1E Equipment for Nuclear Power Generating Stations. Refer to Regulatory Guide 1.89.

  – IEEE 338-1987, IEEE Standard Criteria for the Periodic Surveillance Testing of Nuclear Power Generating Station Safety Systems. Refer to Regulatory Guide 1.118.

  – IEEE 344-1987, IEEE Recommended Practice for Seismic Qualification of Class 1E Equipment for Nuclear Power Generating Stations. Refer to Regulatory Guide 1.100.

- IEEE 379-2000, IEEE Standard Application of the Single Failure Criterion to Nuclear Power Generating Station Safety Systems. Refer to Regulatory Guide 1.53.
- IEEE 382-1996, IEEE Standard for Qualification of Actuators for Power Operated Valve Assemblies with Safety Related Functions for Nuclear Power Plants. Refer to Regulatory Guide 1.73.
- IEEE 383-1974, IEEE Standard for Type Test of Class 1E Electric Cables, Field Splices, and Connections for Nuclear Power Generating Stations. Refer to Regulatory Guide 1.131.
- IEEE 384-1981, IEEE Standard Criteria for Independence of Class 1E Equipment and Circuits. Refer to Regulatory Guide 1.75.
- IEEE 450-1995, IEEE Recommended Practice for Maintenance, Testing, and Replacement of Vented Lead-Acid Batteries for Stationary Applications. Refer to Regulatory Guide 1.32.
- IEEE 484-1996, IEEE Recommended Practice for Installation Design and Installation of Vented Lead-Acid Batteries for Stationary Applications. Refer to Regulatory Guide 1.128.
- IEEE 741-1997, IEEE Standard Criteria for the Protection of Class 1E Power Systems and Equipment in Nuclear Power Generating Stations. Refer to Regulatory Guide 1.63.
- IEEE 1202-1991, IEEE Standard for Flame Testing of Cables for Use in Cable Tray in Industrial and Commercial Occupancies.

8.1.5 Combined License Information

This section contained no requirement for information.

Table 8.1-1 (Sheet 1 of 5)
Criteria and Guidelines for Electric Power Systems

Criteria			Applicability ([a] Section/Subsection)			Remarks
			8.2	8.3.1	8.3.2	
1.	10CFR50 Appendix A – General Design Criteria (GDC) (See Section 3.1 for a discussion of conformance to each of the GDC).					
a.	GDC 2	Design Bases for Protection Against Natural Phenomena			A	
b.	GDC 4	Environmental and Missile Design Basis			A	
c.	GDC 5	Sharing of Structures, Systems, and Components				not applicable
d.	GDC 17	Electric Power Systems			A	
e.	GDC 18	Inspection and Testing of Electric Power Systems			A	
f.	GDC 50	Containment Design Basis		A	A	applicable to penetration design

Note:
(a) "A" denotes applicable to AP1000, and "G" denotes guidelines as defined in NUREG-0800, Rev. 2 (except for those guidelines that are site-specific, which are defined in NUREG-0800, Rev. 3), Table 8-1 (SRP). No letter denotes "Not Applicable."

Table 8.1-1 (Sheet 2 of 5)
Criteria and Guidelines for Electric Power Systems

Criteria	Applicability ([a] Section/Subsection)			Remarks
	8.2	8.3.1	8.3.2	
2. Regulatory Guide (See Section 1.9 for list and discussion of conformance to the Regulatory Guides).				
a. RG 1.6 Independence Between Redundant Standby (Onsite) Power Sources and Between Their Distribution Systems			G	
b. RG 1.9 Selection, Design, and Qualification of Diesel Generator Units Used as Stand-by (Onsite) Electric Power Systems at Nuclear Power Plants				not applicable
c. RG 1.32 Criteria for Safety-Related Electric Power Systems for Nuclear Power Generating Stations			G	
d. RG 1.47 Bypassed and Inoperable Status Indication for Nuclear Power Plant Safety Systems			G	
e. RG 1.63 Electric Penetration Assemblies in Containment Structures for Nuclear Power Plants		G	G	
f. RG 1.75 Physical Independence of Electric Systems			G	
g. RG 1.81 Shared Emergency and Shutdown Electric Systems for Multi-Unit Nuclear Power Plants				not applicable

Note:
(a) "A" denotes applicable to AP1000, and "G" denotes guidelines as defined in NUREG-0800, Rev. 2 (except for those guidelines that are site-specific, which are defined in NUREG-0800, Rev. 3), Table 8-1 (SRP). No letter denotes "Not Applicable."

Table 8.1-1 (Sheet 3 of 5)
Criteria and Guidelines for Electric Power Systems

Criteria			Applicability ([a] Section/Subsection)			Remarks
			8.2	8.3.1	8.3.2	
h.	RG 1.106	Thermal Overload Protection for Electric Motors on Motor-Operated Valves			G	
i.	RG 1.108	Periodic Testing of Diesel Generator Units Used as Onsite Electric Power Systems at Nuclear Power Plants				not applicable
j.	RG 1.118	Periodic Testing of Electric Power and Protection Systems			G	
k.	RG 1.128	Installation Design and Installation of Large Lead Storage Batteries for Nuclear Power Plants			G	
l.	RG 1.129	Maintenance, Testing, and Replacement of Vented Lead-Acid Storage Batteries for Nuclear Power Plants			G	site-specific Battery Service tests are performed in accordance with the Regulatory Guide.
m.	RG 1.131	Qualification Tests of Electric Cables, Field Splices, and Connections for Light-Water-Cooled Nuclear Power Plants			G	The insulating and jacketing material for electrical cables are selected to meet the fire and flame test requirements of IEEE Standard 1202 or IEEE Standard 383 excluding the option to use the alternate flame source, oil or burlap.
n.	RG 1.155	Station Blackout				Not applicable[b]
o.	RG 1.204	Guidelines for Lightning Protection of Nuclear Power Plants	G	G		
p.	RG 1.206	Combined License Applications for Nuclear Power Plants (LWR Edition)	G	G	G	

Note:
(a) "A" denotes applicable to AP1000, and "G" denotes guidelines as defined in NUREG-0800, Rev. 2 (except for those guidelines that are site-specific, which are defined in NUREG-0800, Rev. 3), Table 8-1 (SRP). No letter denotes "Not Applicable."
(b) Station Blackout and the associated guidelines are addressed as a design issue in Subsection 1.9.5.1.5.

Table 8.1-1 (Sheet 4 of 5)
Criteria and Guidelines for Electric Power Systems

Criteria			Applicability ([a] Section/Subsection)			Remarks
			8.2	8.3.1	8.3.2	
3.	Branch Technical Position (BTP)					
a.	BTP ICSB 4 (PSB)	Requirements on Motor-Operated Valves in the ECCS Accumulator Lines			G	see 1.9.2
b.	BTP ICSB 8 (PSB)	Use of Diesel-Generator Sets for Peaking				not applicable
c.	BTP 8-3 ICSB 11 (PSB)	Stability of Offsite Power Systems	G			site-specific Stability Analysis of the Offsite Power System is performed in accordance with the BTP.
d.	BTP ICSB 18 (PSB)	Application of the Single Failure Criterion to Manually Controlled Electrically-Operated Valves			G	see 1.9.2
e.	BTP ICSB 21	Guidance for Application of Regulatory Guide 1.47			G	see also 7.5
f.	BTP PSB 1	Adequacy of Station Electric Distribution System Voltages				not applicable
g.	BTP PSB 2	Criteria for Alarms and Indications Associated with Diesel-Generator Unit Bypassed and Inoperable Status				not applicable

Note:
(a) "A" denotes applicable to AP1000, and "G" denotes guidelines as defined in NUREG-0800, Rev. 2 (except for those guidelines that are site-specific, which are defined in NUREG-0800, Rev. 3), Table 8-1 (SRP). No letter denotes "Not Applicable."

Table 8.1-1 (Sheet 5 of 5)
Criteria and Guidelines for Electric Power Systems

Criteria	Applicability ([a] Section/Subsection)			Remarks
	8.2	8.3.1	8.3.2	
4. NUREG Reports				
a. NUREG CR0660 Enhancement of Onsite Diesel Generator Reliability				not applicable

Note:
(a) "A" denotes applicable to AP1000, and "G" denotes guidelines as defined in NUREG-0800, Rev. 2 (except for those guidelines that are site-specific, which are defined in NUREG-0800, Rev. 3), Table 8-1 (SRP). No letter denotes "Not Applicable."

Table 8.1-201
Not Used

8.2 Offsite Power System

8.2.1 System Description

The normal ac power supply to the main ac power system is provided from the main generator. When the main generator is not available, plant auxiliary power is provided from the switchyard by backfeeding through the main stepup and unit auxiliary transformers. This is the preferred power supply. When neither the normal or the preferred power supply is available due to an electrical fault at either the main stepup transformer, unit auxiliary transformer, isophase bus, or 6.9kv nonsegregated bus duct, fast bus transfer will be automatically initiated to transfer the loads to the reserve auxiliary transformers powered by maintenance sources of power. In addition, two non-Class 1E onsite standby diesel generators supply power to selected plant loads in the event of loss of the normal, preferred, and maintenance power sources. The reserve auxiliary transformers also serve as a source of maintenance power.

Maintenance power is provided at the medium voltage level (6.9 kV) through normally open circuit breakers. Bus transfer to the maintenance source is automatic under fast bus transfer logic or may be initiated manually.

The offsite power system for Turkey Point Units 6 & 7 has four transmission lines from the FPL transmission network to the plant switchyard (Clear Sky substation) from three physically independent substations. The plant switchyard also includes a normally open supply circuit from the existing Turkey Point substation serving Turkey Point Units 1 through 5. This circuit provides an emergency source for offsite power from Turkey Point substation in the event of loss of power in all four transmission circuits to the plant switchyard.

The plant switchyard has two operating voltages with autotransformers interconnecting the 500 kV and 230 kV sections. The Units 6 & 7 main step-up transformers (GSU) and reserve auxiliary transformers (RAT) are connected at 230 kV to the plant switchyard. The interconnection of Units 6 & 7, the switchyard, and the 230 kV and 500 kV transmission systems is shown on Figure 8.2-201 and Figure 8.2-202.

There are two independent 500 kV transmission lines connected to the plant switchyard, and two independent 230 kV transmission lines. As shown below, each transmission line is tied into an FPL substation located between 19 and 52 miles from the plant. There is a 230 kV tie-line between the plant switchyard and the Turkey Point substation which is within the Turkey Point plant property.

Nominal Voltage (kV)	Termination Point	Length (miles)	Thermal Rating (MVA)
500	Levee 500 kV	43	3464
500	Levee 500 kV	43	3464
230	Davis 230 kV	19	1191
230	Pennsuco 230 kV	52	1191
230	Turkey Point (normally open)	0.5	1191

The transmission lines are divided into two separate transmission corridors. They enter the common switchyard from different directions and are maintained in separate rights-of-way. The two 500 kV lines and the Pennsuco 230 kV line are in the west transmission corridor and the Davis 230 kV line and the 230 kV line to Turkey Point substation are in the east transmission corridor.

The transmission lines are designed to meet all requirements of the National Electric Safety Code (Reference 201). Transmission line structures and support structures and systems are designed to the loading requirements of the NESC and FPL standards. The transmission lines are designed with a basic insulation level (BIL) that will minimize flashovers caused by lightning.

Galloping conductors are not anticipated.

A transformer area containing the main step-up transformer, the unit auxiliary transformers, and reserve auxiliary transformers is located next to each turbine building.

The main generator is connected to the offsite power system via three single-phase main stepup transformers. The normal power source for the plant auxiliary ac loads is provided from the isophase generator bus through the two unit auxiliary transformers of identical ratings. In the event of a loss of the main generator, the power is maintained without interruption from the preferred power supply by an auto-trip of the main generator breaker. Power then flows from the transformer area to the auxiliary loads through the main and unit auxiliary transformers.

The transmission line structures associated with the plant are designed to withstand standard loading conditions for the specific-site as provided in Reference 1.

Automatic load dispatch is not used at the plant and does not interface with safety-related action required of the reactor protection system.

8.2.1.1 Transmission Switchyard

The 500 kV section of the plant switchyard is configured in a double-breaker and double-bus arrangement to make two circuits for connecting two transmission lines. Each 500 kV bus is connected to one 230 kV bus by separate 1500 megavolt ampere (MVA) autotransformers. High-side and low-side bank breakers are provided for the autotransformers. All breakers are in the closed position and energized under normal operation. The 500 kV buses, circuit breakers and disconnect switches are rated for a continuous current of 4000 A and a fault duty rating of 50 kA.

The 230 kV buses, circuit breakers and disconnect switches are rated for a continuous current of 4000 A and a fault duty rating of 63 kA.

The plant switchyard includes one terminal for the Unit 6 main step-up transformer connection, one terminal for the Unit 7 main step-up transformer connection, two terminals for connections to the Unit 6 reserve auxiliary transformers, and two terminals for connections to the Unit 7 reserve auxiliary transformers.

Underground conductors are used to connect the main step-up and reserve auxiliary transformers to the switchyard. The conductors for each transformer are routed separately and are protected by reinforced concrete enclosures.

The configuration of the switchyard is shown in Figure 8.2-202.

The switchyard includes surge protective devices, grounding and a lightning protection system in accordance with standard industry practice.

Failure Modes and Effects Analysis

The design of the offsite power system provides for a robust system that supports reliable power production. While offsite power is not required to meet any safety function, multiple, reliable transmission circuits are provided to support operation of the Units 6 & 7 facilities. Neither the accident analysis nor the probabilistic risk assessment has identified the nonsafety-related offsite power system as risk significant for normal plant operation.

The offsite power system for Units 6 & 7 has four transmission lines from the FPL transmission network to the plant substation from three physically independent substations. No single transmission line is designated as the preferred circuit for Unit 6 or for Unit 7. Each of the transmission lines has sufficient capacity and capability from the transmission network to power the plant loads for both units under normal, abnormal and accident conditions. Each 230 kV bus is split into two sections by a bus breaker to prevent loss of both units with one bus out of service (on clearance) and a trip of the other 230 kV bus.

A failure modes and effects analysis of the Clear Sky substation confirms that a single initiating event, such as transmission line fault plus a single breaker not operating, does not cause failure of more than one single offsite transmission line, or a loss of offsite power to either Units 6 or 7 onsite buses via the main step-up transformer. This evaluation recognizes that a single failure of some switchyard components could directly cause the loss of the switchyard feed to a unit's main step-up transformer such as a fault on this feed. Evaluated events include a breaker not operating during a fault condition, a fault on a switchyard bus, a spurious relay trip, or a loss of control power supply. In summary:

- In the event of a fault on a 500 kV transmission line (or spurious relay operation), the two associated line circuit breakers trip to isolate the line. All other equipment remains energized.
- In the event of a fault on a 500 kV transmission line with a stuck line breaker, the breaker failure relay causes all circuit breakers on the affected bus to trip, and thereby, de-energizes the affected bus and disconnect one autotransformer. All other equipment remains energized.
- In the event of a 500 kV bus fault, (or spurious relay operation), the breakers associated with the affected bus trip, thereby isolating the faulted bus and disconnecting one autotransformer. All other equipment remains energized.
- In the event of a 500 kV bus fault with a stuck line breaker, the breaker failure relay trips the adjacent line breaker and initiates transfer trip to the remote substation to isolate the faulted bus and one 500 kV transmission line. All other equipment remains energized.
- In the event of a 500 kV bus fault with a stuck high-side autotransformer breaker, the breaker failure relay trips the low-side autotransformer breaker to isolate the faulted bus and the autotransformer. All other equipment remains energized.
- In the event of a fault on a 230 kV transmission line (or spurious relay operation), the two associated circuit breakers trip to isolate the line and all other equipment remains energized.
- In the event of a fault on a 230 kV transmission line with a stuck center position breaker, the breaker failure relay trips the adjacent breaker and thereby isolating the faulted transmission line and de-energizing one reserve auxiliary transformer. All other equipment remains energized.

- In the event of a fault on a 230 kV transmission line with a stuck bus breaker, the breaker failure relay causes all circuit breakers on the affected bus to trip and thereby de-energize the affected bus. All other equipment remains energized.

- In the event of a 230 kV bus fault (or spurious relay operation), the breakers associated with the affected bus trip, thereby isolating the faulted bus. All other equipment remains energized.

- In the event of a 230 kV bus fault with a stuck breaker, the breaker failure relay trips the adjacent breaker to isolate the faulted bus. If the stuck breaker is associated with either the Unit 6 or 7 main step-up connections, opening of the adjacent breaker interrupts power to the associated main step-up and unit auxiliary transformer resulting in the loss of both preferred and normal sources of power to the unit. The switchyard feeds to the reserve auxiliary transformers are still available.

- In the event of a fault on one of the 500/230 kV autotransformers (or spurious relay operation), the autotransformer bus breakers trip in the 500 kV and 230 kV switchyards to isolate the autotransformer. All other equipment remains energized.

- In the event of a fault on one of the 500/230 kV autotransformers with a stuck bus circuit breaker, the breaker failure relay trips all the breakers on the affected bus and thereby isolates the affected bus. All other equipment remains energized.

- Failure of protective relays or breaker trip coils or dc control power is compensated for by redundant relays and breaker trip coils powered from different dc sources, which allows the protective function to occur. (Failure of protective relays or breaker trip coils or dc control power is automatically detected and an alarm is given.)

The results of the above failure modes and effects analysis show that a single fault in any section of the 230 kV or 500 kV bus is cleared by the adjacent breakers and does not interrupt operation of the remaining part of the switchyard bus or the connection of the unaffected transmission lines. A bus fault with a stuck breaker associated with a main step-up transformer connection causes the loss of preferred power to the associated Turkey Point unit. The switchyard feeds to the reserve auxiliary transformers are still available. A bus fault concurrent with any other stuck breaker does not cause a loss of power to either Unit 6 or 7.

Transmission System Provider/Operator

FPL is the transmission system provider/operator and it constructs, owns, and operates all substation and transmission facilities between the plant and the points of interconnection to the grid. An interface agreement in accordance with the North American Electric Reliability Corporation (NERC) Standard NUC-001-01, between FPL Transmission & Substation-Power Supply Department and Units 6 & 7 will establish the protocol to provide effective monitoring and oversight of all grid, switchyard, and plant activities. These activities include maintenance, testing, planned outages, load reductions, and emergent conditions that could affect offsite power reliability. Department directives will implement the agreement and will facilitate prompt and effective communications between the FPL power supply system operator and Units 6 & 7 shift manager or unit supervisor. Procedures will be established to ensure switchyard maintenance and design changes are reviewed before implementation.

FPL uses a real-time contingency analysis computer program that is used by FPL's transmission system operators in determining the security level of the transmission system by performing an analysis using a predefined set of contingency criteria (e.g., single contingency). The computer program simulates a list of active contingencies on the current power system and produces an output

of system conditions for each defined contingency. The program provides an updated output approximately every 5 minutes using real-time system conditions (e.g., real-time line outages, real-time flows and voltages, real-time breaker status, etc.). For each defined contingency simulated, specified elements are checked for limit violations (e.g. line overloads, voltage limits, and reactive limits at generator buses). All contingencies that cause violations are output along with the identification of the violations and information on the magnitude of the violation. The current and previous outputs are displayed to determine degree of change as compared to the previous contingency analysis output result.

A priority is also designated for each contingency. Violations of nuclear plant limits are assigned the highest priority and if a violation is detected by the contingency analysis computer program, it is reported at the top of the output violation list. The computer program alerts the system operator of abnormal voltages, overloads, or unit limitations that can be created by a loss of one or several elements of the transmission system. The output of the contingency analysis computer program is used continuously by the operators to make critical decisions in response to potential severe conditions.

Minimum and maximum voltage criteria specific to the Units 6 & 7 switchyard buses will be documented in the interface agreement. The Units 6 & 7 agreement will also specify that the Units 6 & 7 shift manager or unit supervisor be notified within 15 minutes if a condition exists or is forecasted to exist (i.e., via contingency analysis computer program) that would result in minimum or maximum switchyard voltage requirements for Units 6 & 7 switchyard being exceeded. This agreement, as well as the overall switchyard agreement, will require restoration of power to Units 6 & 7 on a first-priority basis in the event of a loss of offsite power. The goal for maximum restoration time will be 30 minutes.

8.2.1.2 Transformer Area

The transformer area contains the main stepup transformers, the unit auxiliary transformers, and the reserve auxiliary transformers. Protective relaying and metering required for this equipment is located in the turbine building. The necessary power sources (480 Vac, 120 Vac, and 125 Vdc) to the equipment are supplied from the turbine building. See Subsection 9.5.1 for a discussion of fire protection associated with plant transformers.

One feeder connects the transformer area with the switchyard to supply power to/from the main stepup transformers for the unit. An arrangement is shown in Figure 8.3.1-1.

The transformer area for each unit contains the main step-up transformers (three single-phase transformers plus one spare), three unit auxiliary transformers, and two reserve auxiliary transformers. The reserve auxiliary transformers are connected to the 230 kV section of the switchyard. The 230 kV windings of the main step-up transformer are connected in a wye configuration and connected to the 230 kV section of the switchyard.

8.2.1.2.1 Switchyard Protection Relay Scheme

The switchyard's relay protection schemes continuously monitor the conditions of the power system and are designed to detect and isolate the faults with maximum speed and minimum disturbance to the system. The schemes consist of primary and secondary relaying systems that use separate instrument current transformers for monitoring, separate trip circuits, and separate dc power supplies to achieve redundancy in their protection functions. The principal features of the schemes provided for different equipment are described below:

- Each of the 500 kV and 230 kV transmission lines is protected by two independent pilot systems that provide high-speed clearing for a fault anywhere on the line.

- The switchyard 500/230 kV autotransformers and switchyard buses have primary and secondary protective relaying systems that provide high-speed clearing for a fault within the switchyard.

- The 230 kV circuits to the main step-up and reserve auxiliary transformers have primary and secondary protective relaying systems located in the switchyard control building that communicate via fiber optics to the associated protective relaying system located in the plant.

Breaker failure relays are provided for all switchyard breakers to isolate a failed breaker from all switchyard sources. In addition, for the switchyard breakers connected to the main step-up and reserve auxiliary transformers, the remote sources are isolated using direct transfer trip communication.

The protective devices controlling the switchyard breakers are set with consideration given to preserving the plant grid connection following a turbine trip.

8.2.1.2.2 Plant Response to High Voltage Open Phase Condition

A monitoring system is installed on the credited GDC 17 offsite power circuit that provides continuous open phase condition monitoring of the main step-up (MSU) transformer high voltage (HV) input power supply (Reference 202). The system detects an open phase condition (with or without a concurrent high impedance ground on the HV side of the transformer) on one or more phases under all transformer loading conditions. The open phase condition monitoring system provides an alarm to the operators in the control room should an open phase condition occur on the HV source to the MSU transformers. The system design utilizes commercially available components including state of the art digital relaying equipment and input parameters as required to provide loss of phase detection and alarm capability.

Additionally, a high-voltage open phase condition with or without a ground fault can manifest itself as an unacceptable voltage on the 6.9 kV medium voltage ES-1 and ES-2 buses during normal loading conditions. The presence of unacceptable voltages on the ES-1 and ES-2 buses results in isolation of the affected medium voltage bus from the offsite power supply and enables the onsite standby diesel generators to start and restore AC power to the ES-1 and ES-2 buses and associated defense-in-depth loads. The onsite AC power system is described in Subsection 8.3.1.

Motor management relays for the medium voltage motors on ES-1 and ES-2 provide detection of unacceptably high negative sequence currents. High negative sequence current motor trips or other running load trips provide alarms in the main control room (MCR), which can assist in the detection of a high-voltage open phase condition with or without a ground fault. Electric circuit protection for the medium voltage system and equipment is described in Subsection 8.3.1.1.1.1.

A high-voltage open phase condition with or without a ground fault can also manifest itself as an unacceptable voltage on the 480 VAC low-voltage buses powered from ES-1 and ES-2. The safety related IDS battery chargers are powered from the low-voltage buses and continue to charge the IDS batteries unless the battery charger input or output monitored electrical parameters are unacceptable. If the monitored electrical parameters degrade to the point that the battery charger no longer provides sufficient DC bus voltage, the Class 1E electrical system DC bus receives power from the applicable IDS battery and the battery charger maintains isolation between the Non-Class 1E AC and Class 1E DC power systems which generates alarms in the MCR. The onsite AC power system is described in Subsection 8.3.1 and the Class 1E DC power system is described in Subsection 8.3.2.1.1.

Operator actions and maintenance and testing activities are addressed in procedures, as described in Section 13.5. Plant operating procedures, including off-normal operating procedures associated

with the monitoring system, will be developed prior to fuel load. Maintenance and testing procedures, including calibration, surveillance testing, setpoint determination and troubleshooting procedures associated with the monitoring system, will be developed prior to fuel load.

Control Room operator and maintenance technician training associated with the operation and maintenance of the monitoring system will be conducted in accordance with the milestones for Non-Licensed Plant Staff and Reactor Operator Training Programs in Table 13.4-201.

8.2.1.3 Switchyard Control Building

A control building within the switchyard houses redundant dc battery systems and accommodates a sufficient number of relay and control panels to serve the requirements of the switchyard.

The controls for switchyard breakers associated with the Units 6 & 7 main step-up transformers are under the administrative control of the plant. The controls for these breakers are located inside the plant.

The system control center of FPL transmission and substation operations has operational control over the other breakers in the switchyard (including those associated with the reserve auxiliary transformers).

The switchyard's normal ac power is supplied from station service transformers supplied by the tertiary windings of the 500/230 kV autotransformers. A backup source of ac power to the switchyard is supplied from a plant source.

8.2.1.4 Switchyard and Transmission Line Testing and Inspection

FPL uses a process called The Phoenix Assurance Process to ensure the installations of new, relocated, or modified facilities are fully operational before being placed into service. The purpose of this process is to provide the procedures used for equipment installation and collection of installation/commissioning data. This assurance documentation is compiled into an assurance book for each facility and serves as a source of baseline data for installations. The objective of Phoenix is fourfold: safety (zero injuries), facilities operate correctly after they are put into service, no rework associated with the installation of facilities, and documentation for new assets are recorded, and lessons learned are passed on for future reference.

It is the responsibility of personnel involved in the engineering, procurement, construction, installation, and commissioning of new equipment to supply proper documentation based on the requirements of the Phoenix Assurance Process.

The Phoenix Assurance Process covers acceptance, commissioning, and in-service testing for new equipment and defines the responsibility of each responsible person associated with the project. An individual, station-specific book is assembled, incorporating, for each component, the specific procedures, FPL quality assurance checklists, and forms prepared for the purpose of ensuring equipment is ready for service.

The transmission switchyard interface agreement will specify that grid maintenance and testing activities that could affect offsite power reliability be closely coordinated with Units 6 & 7. This agreement will clearly state that the plant switchyard equipment is maintained by FPL transmission and substation operations.

FPL transmission and substation operations will conduct regular inspections of the plant switchyard and perform regular maintenance and necessary repair or replacement of equipment.

For performance of maintenance, testing, calibration, and inspection, FPL follows its own field test manuals, vendor manuals and drawings, and industry's maintenance practices to comply with applicable NERC reliability standards.

FPL verifies that these test results demonstrate compliance and takes corrective actions as necessary. FPL plans and schedules maintenance activities and notifies the nuclear plant in advance.

The interconnecting switchyard, as well as other substation facilities, has multiple levels of inspection and maintenance. They include the following:

- Monthly walk-through and visual inspection.
- Quarterly oil sampling of power transformers at generating stations. Oil samples are tested for dissolved gas analysis and oil quality.
- Power circuit breakers are inspected and maintained according to the number of operations and length of time in service, in accordance with the breaker manufacturer's recommendations.
- Doble power testing on power transformers.
- Infrared testing on bus and equipment to identify hot spots.
- Relay functional tests.

8.2.2 Grid Stability

The AP1000 is designed with passive safety-related systems for core cooling and containment integrity and, therefore, does not depend on the electric power grid for safe operation. This feature of the AP1000 significantly reduces the importance of the grid connection and the requirement for grid stability. The AP1000 safety analyses assume that the reactor coolant pumps can receive power from either the main generator or the grid for a minimum of 3 seconds following a turbine trip.

The AP1000 main generator is connected to the generator bus through the generator circuit breaker. The grid is connected to the generator bus through the main step-up transformers and the grid breakers. The reactor coolant pumps are connected to the generator bus through the reactor coolant pump breakers, the 6.9 kV switchgear, and the unit auxiliary transformers. During normal plant operation the main generator supplies power to the generator bus. Some of this power is used by the plant auxiliary systems (including the reactor coolant pumps); the rest of the power is supplied to the grid.

If, during power operation of the plant, a turbine trip occurs, the motive power (steam) to the turbine will be removed. The generator will attempt to keep the shaft rotating at synchronous speed (governed by the grid frequency) by acting like a synchronous motor. The reverse-power relay monitoring generator power will sense this condition and, after a time delay of at least 15 seconds, open the generator breaker. During this delay time the generator will be able to provide voltage support to the grid if needed. The reactor coolant pumps will receive power from the grid for at least 3 seconds following the turbine trip. A grid stability analysis to show that, with no electrical system failures, the grid will remain stable and the reactor coolant pump bus voltage will remain above the voltage required to maintain the flow assumed in the Chapter 15 analyses for a minimum of 3 seconds following a turbine trip is as addressed in Subsection 8.2.5. In the Chapter 15 analyses, if the initiating event is an electrical system failure (such as failure of the isophase bus), the analyses do not assume operation of the reactor coolant pumps following the turbine trip. The responsibility for

setting the protective devices controlling the switchyard breakers with consideration given to preserving the plant grid connection following a turbine trip is discussed in Subsection 8.2.5.

If the turbine trip occurs when the grid is not connected (generator supplying plant house loads only), the main turbine-generator shaft will begin to slow down as the energy stored in the rotational inertia of the shaft is used to supply the house loads (including reactor coolant pumps). The system will coast down until the generator exciter can no longer maintain generator terminal voltage and the generator breaker is tripped on either generator under-voltage or exciter over-current. This coast down will last at least 3 seconds before the generator breaker trips.

The sequence of events following a loss-of-offsite-power event is the same as those described for grid-disconnected operation.

The Florida Reliability Coordinating Council (FRCC) is the approving grid organization for reliability studies performed on the area bulk electric system. FPL, as the transmission service provider and member of the FRCC, conducts ongoing planning studies of the transmission grid. Model data used to perform simulation studies of projected future conditions is maintained and updated as load forecasts and future generation/transmission changes evolve. Studies are performed annually to assess future system performance in accordance with NERC reliability standards. These studies form a basis for identifying future transmission expansion needs. New, large generating units requesting to connect to the area bulk electric system are required to complete the large generator interconnection procedure. The studies performed by FPL as part of this procedure examine the generating unit (combined turbine generator-exciter), the main step-up transformer(s), the switchyard to which the generators are connected, and the transmission system.

FPL performed the required studies to provide an analysis of the stability of the grid with the Units 6 & 7 nuclear units interconnected and integrated into the FPL transmission system. The analysis included an assessment of how the generators and system would perform following potential severe disturbances.

Models used for the analysis were based on the latest available load forecasts, generation expansion plan and system plans for 10 years into the future. As the load forecasts and system plans are updated (e.g., topological changes, generation retirements or additions), the performance of the system is reviewed as part of the normal transmission system assessment to ensure compliance with NERC and FRCC reliability standards and the effectiveness of the transmission plan.

The performance of the grid stability analysis study consisted of dynamic simulation and power flow analysis of the post-transient condition for each case examined. The simulation results were analyzed for any sign of instability, protective relay action, load shedding, voltage, or line-loading violations.

A dynamic stability analysis was conducted to assess the response of the transmission system to various system disturbances. The grid stability study examined the following contingencies:

- Loss of the largest source
- Loss of the most critical transmission circuit
- Loss of the largest load
- Grid stability following turbine trip (minimum of 3 seconds)
- Breaker failure

Dynamic simulations were performed using the latest available FY 2007 FRCC 2017 summer peak base case scaled to 2020 peak load and average (60 percent of peak) load levels combined with the NERC Multiregional Modeling Working Group, FY 2006, 2012 stability case for the southern region with existing commitments of all of the companies in Florida. The study cases assumed the connection of the Units 6 & 7 and attendant incremental facilities in the base case. Units 6 & 7 were modeled as two generating units, each with a rating of 1389 MVA connected at 230 kV to the Clear Sky substation.

Study cases were selected to identify system performance under stressed but likely scenarios. An off-peak load level is the more stressed scenario for stability. Conditions more likely to occur at summer peak load and average load (approximately 60 percent of summer peak) were considered.

The simulation results were analyzed for any sign of instability, protective relay action, or load shedding. The simulation results showed that the Units 6 & 7 plant and transmission system responses to the contingency events were acceptable.

Power flow analysis of the post transient condition for each case was performed. This analysis was used to assess whether the event causes any voltage or line-loading violations.

The study was conducted by performing steady-state and transient stability analyses. Cases studied included loss of the largest source, loss of the most critical transmission circuit, loss of the largest load, grid stability following turbine trip (minimum of 3 seconds), and breaker failure. The performance of the system complies with NERC reliability standards for normal TPL-001-0 Category A, single contingency TPL-002-0 Category B, multiple contingency TPL-003-0 Category C, and extreme bulk electric system events TPL-004-0 Category D. The simulation results were analyzed for any sign of instability, protective relay action, load shedding, voltage or line-loading violations.

The results of the grid stability analysis study do not indicate a loss of electric power from any remaining supplies as a result of, or coincident with, the loss of power generated by the nuclear power units or the loss of power from the transmission network.

In order to maintain reactor coolant pump operation for three seconds following a turbine trip as specified in Subsection 8.2.2, the grid voltage at the high-side of the GSU and RATs cannot dip more than 0.15 p.u. from the pre-trip steady-state voltage. The results of turbine trip simulations demonstrate that the voltage and frequency of the 230 kV switchyard buses remain within the limits required to maintain reactor coolant pump operation for at least 3 seconds following a turbine trip in either Unit 6 or 7.

Table 8.2-201 confirms that the interface requirements for steady-state load, inrush kVA for motors, nominal voltage, allowable voltage regulation, nominal frequency, allowable frequency fluctuation, maximum frequency decay rate, and the limiting under frequency value for the reactor coolant pump have been met.

For the period from January 1, 1988, through September 30, 2008, the average grid availability for the eight 230 kV lines from the existing Turkey Point substation and two 500 kV lines from Levee substation in the FPL system is approximately 99.8 percent with only 48 forced outages lasting more than one hour. The average frequency of forced line outages is approximately 1.4 line outages per year for these transmission lines. The majority of the outages where the cause was recorded were due to environmental conditions and equipment malfunction. Other causes for outages were foreign intervention, human error, and relay misoperation.

8.2.3 Conformance to Criteria

The offsite sources are not Class 1E. Commercial equipment is manufactured to the industrial standards listed in Subsection 8.2.6. The design meets General Design Criterion 1. Unit trips occur at the generator breaker and do not cause the loss of the preferred power source to the plant electrical systems. The AP1000 does not require ac power sources for mitigating design basis events; Chapter 15.0 describes the design bases assumptions utilized for analysis of these events.

The AP1000 plant design supports an exemption to the requirement of GDC 17 for two physically independent offsite circuits by providing safety-related passive systems for core cooling and containment integrity, and multiple nonsafety-related onsite and offsite electric power sources for other functions. See Section 6.3 for additional information on the systems for core cooling.

A reliable dc power source supplied by batteries provides power for the safety-related valves and instrumentation during transient and accident conditions.

The Class 1E dc and UPS system is the only safety-related power source required to monitor and actuate the safety-related passive systems. Otherwise, the plant is designed to maintain core cooling and containment integrity, independent of nonsafety-related ac power sources indefinitely. The only electric power source necessary to accomplish these safety-related functions is the Class 1E dc and UPS power system which includes the associated safety-related 120V ac distribution switchgear.

Although the AP1000 is designed with reliable nonsafety-related offsite and onsite ac power that are normally expected to be available for important plant functions, nonsafety-related ac power is not relied upon to maintain the core cooling or containment integrity.

The nonsafety-related ac power system is designed such that plant auxiliaries can be powered from the grid under all modes of operation. During loss of offsite power, the ac power is supplied by the onsite standby diesel-generators. Preassigned loads and equipment are automatically loaded on the diesel-generators in a predetermined sequence. Additional loads can be manually added as required. The onsite standby power system is not required for safe shutdown of the plant.

Conformance with General Design Criterion 18 is provided by the test and inspection capability of the system.

8.2.4 Standards and Guides

In addition to the General Design Criteria, the industry guides and standards listed as Reference 2 through 4 are used as guides in the design and procurement of the offsite power system.

8.2.5 Combined License Information for Offsite Electrical Power

The design of the ac power transmission system and its testing and inspection plan is addressed in Subsections 8.2.1, 8.2.1.1, 8.2.1.2, 8.2.1.3, and 8.2.1.4.

The technical interfaces for ac power requirements from offsite and the analysis of the offsite transmission system and the setting of protective devices are addressed in Subsections 8.2.1.2.1 and 8.2.2.

8.2.6 References

1. ANSI C2-1997, “National Electrical Safety Code.”

2. ANSI C37.010-1999, “IEEE Application Guide for AC High-Voltage Circuit Breakers Rated on a Symmetrical Current Basis.”

3. ANSI C37.90-1989, “IEEE Standard for Relays and Relay Systems Associated with Electric Power Apparatus.”

4. ANSI C57.12.00-2000, “IEEE Standard General Requirements for Liquid-Immersed Distribution, Power and Regulating Transformers.”

201. Institute of Electrical and Electronics Engineers, *National Electric Safety Code, C2-2007*.

202. NRC Bulletin 2012-01, *Design Vulnerability in Electric Power System*, July 27, 2012.

Table 8.2-201
Grid Stability Interface Evaluation

Table 1.8-1 Item 8.2 Parameter	Westinghouse Offsite AC Requirement	Turkey Point Units 6 & 7 Value Assumed
Steady-state load	"normal running values provided as input to grid stability"	Load in each Unit = (100 +j 60) MVA
Inrush kVA for motors	56,712 kVA*	56,712 kVA*
Nominal voltage	Not provided	230 kV
Allowable voltage regulation	0.95-1.05 p.u. steady state 0.15 p.u. transient dip**	0.95-1.05 p.u. steady state 0.15 p.u. transient dip**
Nominal frequency	60 Hz	60 Hz
Allowable frequency fluctuation	± 1/2 Hz indefinite	± 1/2 Hz indefinite
Maximum frequency decay rate	5 Hz/sec	5 Hz/sec

*Based on the inrush of a single 10,000 HP feedwater pump assuming efficiency = 0.95, pf = 0.9, and inrush = 6.5 x FLA

**Applicable to Turbine Trip Only. The maximum allowable voltage dip from the pre-event steady state voltage value during the 3-second turbine trip transient event as measured at the point of connection to the high side of the generator step-up transformer and the reserve auxiliary transformer.

Table 1.8-1 Item 8.2 Parameter	Westinghouse Offsite AC Requirement	Turkey Point Units 6 & 7 Value Calculated
Limiting under frequency value for RCP	$\geq$ 57.7 Hz	$\geq$ 59.73 Hz

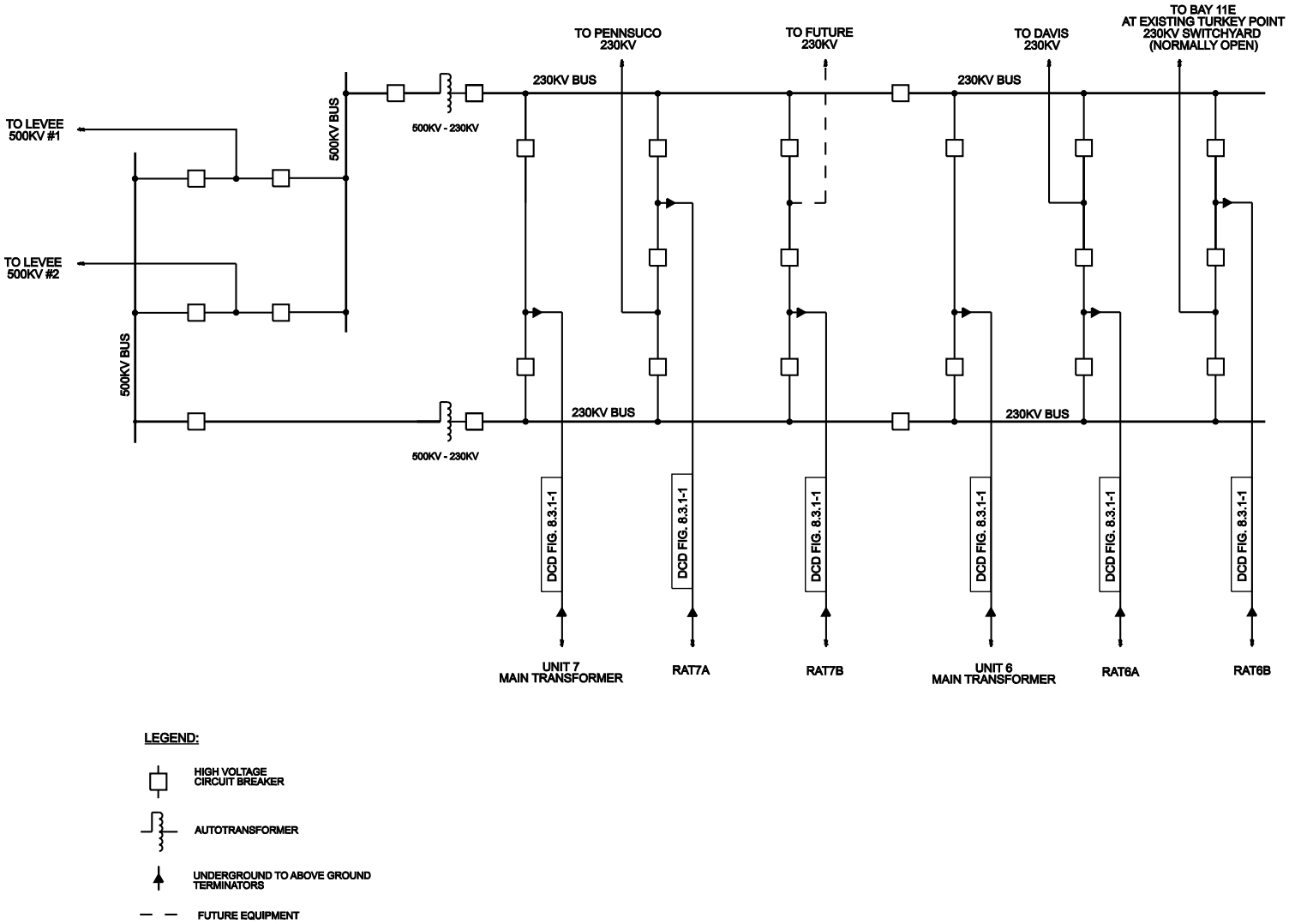

Figure 8.2-201 Offsite Power System One-Line Diagram

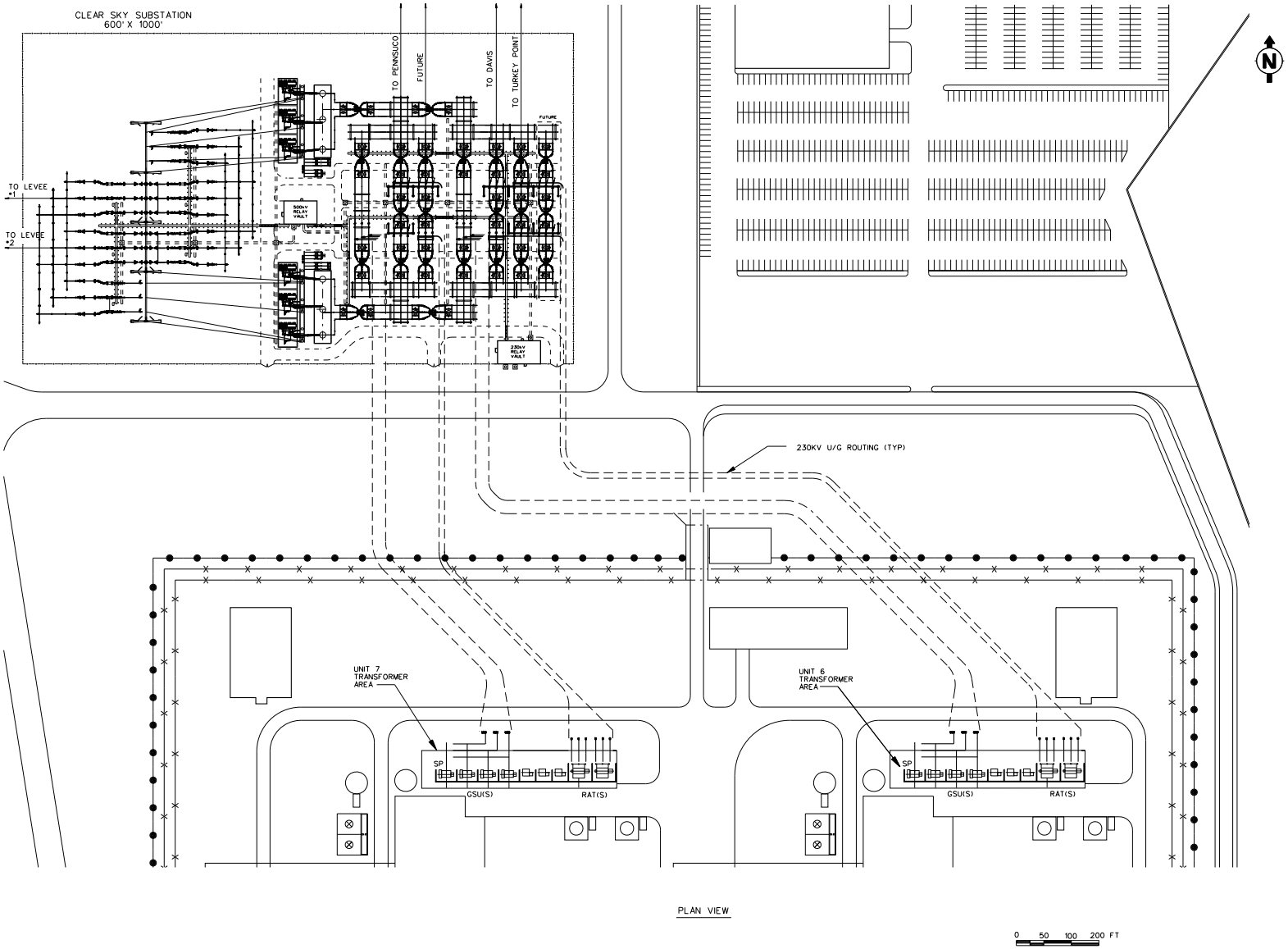

Figure 8.2-202 Switchyard General Arrangement

8.3 Onsite Power Systems

8.3.1 AC Power Systems

8.3.1.1 Description

The onsite ac power system is a non-Class 1E system comprised of a normal, preferred, maintenance and standby power supplies. The normal, preferred, and maintenance power supplies are included in the main ac power system. The standby power is included in the onsite standby power system. The Class 1E and non-Class 1E 208/120 Vac instrumentation power supplies are described in Subsection 8.3.2 as a part of uninterruptible power supply in the dc power systems.

8.3.1.1.1 Onsite AC Power System

The main ac power system is a non-Class 1E system and does not perform any safety-related functions. It has nominal bus voltage ratings of 6.9 kV, 480 V, 277 V, 208 V, and 120 V.

Figure 8.3.1-1 shows the main generator, transformers, feeders, buses, and their connections. The ratings of major ac equipment are listed in Table 8.3.1-3.

During power generation mode, the turbine generator normally supplies electric power to the plant auxiliary loads through the unit auxiliary transformers. The plant is designed to sustain a load rejection from 100 percent power with the turbine generator continuing stable operation while supplying the plant house loads. The load rejection feature does not perform any safety function.

During plant startup, shutdown, and maintenance the generator breaker remains open. The main ac power is provided by the preferred power supply from the high-voltage switchyard (switchyard voltage is site-specific) through the plant main stepup transformers and two unit auxiliary transformers. Each unit auxiliary transformer supplies power to about 50 percent of the plant loads. The site-specific switchyard and transformer voltages are shown on Figure 8.2-201.

A maintenance source is provided to supply power through two reserve auxiliary transformers. The maintenance source and the associated reserve auxiliary transformers primary voltage are site specific. The reserve auxiliary transformers are sized so that it can be used in place of the unit auxiliary transformers.

The two unit auxiliary transformers have two identically rated 6.9 kV secondary windings. The third unit auxiliary transformer is a two winding transformer sized to accommodate the electric boiler and site-specific loads. Secondaries of the auxiliary transformers are connected to the 6.9 kV switchgear buses by nonsegregated phase buses. The primary of the unit auxiliary transformer is connected to the main generator isolated phase bus duct tap. The 6.9 kV switchgear designation, location, connection, and connected loads are shown in Figure 8.3.1-1. The buses tagged with odd numbers (ES1, ES3, etc.) are connected to one unit auxiliary transformer and the buses tagged with even numbers (ES2, ES4, etc.) are connected to the other unit auxiliary transformer. ES7 is connected to the third unit auxiliary transformer. 6.9 kV buses ES1-ES6 are provided with an access to the maintenance source through normally open circuit breakers connecting the bus to the reserve auxiliary transformer. ES7 is not connected to the maintenance source. Bus transfer to the maintenance source is manual or automatic through a fast bus transfer scheme.

The arrangement of the 6.9 kV buses permits feeding functionally redundant pumps or groups of loads from separate buses and enhances the plant operational flexibility. The 6.9 kV switchgear powers large motors and the load center transformers. There are two switchgear (ES1 and ES2) located in the annex building, and five (ES3, ES4, ES5, ES6, and ES7) in the turbine building.

The main stepup transformers have protective devices for sudden pressure, neutral overcurrent, and differential current. The unit auxiliary transformers have protective devices for sudden pressure, overcurrent, differential current, and neutral overcurrent. The isophase bus duct has ground fault protection. If these devices sense a fault condition the following actions will be automatically taken:

- Trip high-side (grid) breaker
- Trip generator breaker
- Trip exciter field breaker
- Trip the 6.9 kV buses connected to the faulted transformer
- Initiate a fast bus transfer of ES1-ES6 6.9kV buses ES1-ES6.

The reserve auxiliary transformers have protective devices for sudden pressure, overcurrent, differential current and neutral overcurrent. The reserve auxiliary transformers protective devices trip the reserve supply breaker and any 6.9 kV buses connected to the reserve auxiliary transformers.

The onsite standby power system powered by the two onsite standby diesel generators supplies power to selected loads in the event of loss of normal, and preferred ac power supplies followed by a fast bus transfer to the reserve auxiliary transformers. Those loads that are priority loads for defense-in-depth functions based on their specific functions (permanent nonsafety loads) are assigned to buses ES1 and ES2. These plant permanent nonsafety loads are divided into two functionally redundant load groups (degree of redundancy for each load is described in the sections for the respective systems). Each load group is connected to either bus ES1 or ES2. Each bus is backed by a non-Class 1E onsite standby diesel generator. In the event of a loss of voltage on these buses, the diesel generators are automatically started and connected to the respective buses. In the event where a fast bus transfer initiates but fails to complete, the diesel generator will start on an undervoltage signal; however, if a successful residual voltage transfer occurs, the diesel generator will not be connected to the bus because the successful residual voltage transfer will provide power to the bus before the diesel connection time of 2 minutes. The source incoming breakers on switchgear ES1 and ES2 are interlocked to prevent inadvertent connection of the onsite standby diesel generator and preferred/maintenance ac power sources to the 6.9 kV buses at the same time. The diesel generator, however, is capable of being manually paralleled with the preferred or reserve power supply for periodic testing. Design provisions protect the diesel generators from excessive loading beyond the design maximum rating, should the preferred power be lost during periodic testing. The control scheme, while protecting the diesel generators from excessive loading, does not compromise the onsite power supply capabilities to support the defense-in-depth loads. See Subsection 8.3.1.1.2 for starting and load sequencing of standby diesel generators.

The reactor coolant pumps (RCPs) are powered from the four switchgear buses located in the turbine building, one RCP per bus. Variable-speed drives are provided for RCP startup and for RCP operation when the reactor trip breakers are open. During normal power operation (reactor trip breakers are closed), 60 Hz power is provided directly to the RCPs and the variable-speed drives are not connected.

Each RCP is powered through two Class 1E circuit breakers connected in series. These are the only Class 1E circuit breakers used in the main ac power system for the specific purpose of satisfying the safety-related tripping requirement of these pumps. The reactor coolant pumps connected to a common steam generator are powered from two different unit auxiliary transformers. The bus assignments for the reactor coolant pumps are shown in Figure 8.3.1-1.

The 480 V load centers supply power to selected 460 V motor loads and to motor control centers. Bus tie breakers are provided between two 480 V load centers each serving predominantly redundant loads. This intertie allows restoration of power to selected loads in the event of a failure or maintenance of a single load center transformer. The bus tie breakers are interlocked with the corresponding bus source incoming breakers so that one of the two bus source incoming breakers

must be opened before the associated tie breaker is closed. Load center 71, associated with ES-7, does not have an equivalent match.

The 480 V motor control centers supply power to 460 V motors not powered directly from load centers, while the 480/277 V, and 208/120 V distribution panels provide power for miscellaneous loads such as unit heaters, space heaters, and lighting system. The motor control centers also provide ac power to the Class 1E battery chargers for the Class 1E dc power system as described in Subsection 8.3.2.

Two ancillary ac diesel generators, located in the annex building, provide ac power for Class 1E post-accident monitoring, MCR lighting, MCR and I&C room ventilation, and pump power to refill the PCS water storage tank and the spent fuel pool, when all other sources of power are not available.

Each ancillary ac generator output is connected to a distribution panel. The distribution panel is located in the room housing the diesel generators. The distribution panel has incoming and outgoing feeder circuit breakers as shown on Figure 8.3.1-3. The outgoing feeder circuit breakers are connected to cables which are routed to the divisions B and C voltage regulating transformers and to the PCS pumps. Each distribution panel has the following outgoing connections:

- Connection for Class 1E voltage regulating transformer to power the post-accident monitoring loads, the lighting in the main control room, and ventilation in the main control room and divisions B and C I&C rooms.
- Connection for PCS recirculation pump to refill the PCS water storage tank and the spent fuel pool.
- Connection for local loads to support operation of the ancillary generator (lighting and fuel tank heating).
- Temporary connection for a test load device (e.g., load resistor).

  See Figure 8.3.1-3 for connections to post-72-hour loads.

8.3.1.1.1.1 Electric Circuit Protection

Protective relay schemes and direct acting trip devices on circuit breakers:

- Provide safety of personnel
- Minimize damage to equipment
- Minimize system disturbances
- Isolate faulted equipment and circuits from unfaulted equipment and circuits
- Maintain (selected) continuity of the power supply

Major types of protection systems employed for AP1000 include the following:

Medium Voltage Switchgear

Differential Relaying

Each medium voltage switchgear bus is provided with a bus differential relay (device 87B) to protect against a bus fault. The actuation of this relay initiates tripping of the source incoming circuit breaker and all branch circuit load breakers. The differential protection scheme employs high-speed relays.

Motors rated 1500 hp and above are generally provided with a high dropout overcurrent relay (device 50D) for differential protection.

Overcurrent Relaying

To provide backup protection for the buses, the source incoming circuit breakers are equipped with an inverse time overcurrent protection on each phase and a residually connected inverse time ground overcurrent protection.

Each medium voltage motor feeder breaker is equipped with a motor protection relay which provides protection against various types of faults (phase and ground) and abnormal conditions such as locked rotor and phase unbalance. Motor overload condition is annunciated in the main control room.

Each medium voltage power feeder to a 480 V load center has a multifunction relay. The relay provides overcurrent protection on each phase for short circuit and overload, and an instantaneous overcurrent protection for ground fault.

Undervoltage Relaying

Medium voltage buses are provided with a set of three undervoltage relays (device 27B) which trip motor feeder circuit breakers connected to the bus upon loss of bus voltage using two-out-of-three logic to prevent spurious actuation. In addition, a protective device is provided on the line side of incoming supply breakers of buses ES1 and ES2 to initiate an alarm in the main control room if a sustained low or high voltage condition occurs on the utility supply system. The alarm is provided so that the operator can take appropriate corrective measures.

480-V Load Centers

Each motor-feeder breaker in load centers is equipped with a trip unit which has long time, instantaneous, and ground fault tripping features. Overload condition of motors is annunciated in the main control room.

The circuit breakers feeding the 480V motor control centers and other non-motor loads have long time, short time, and ground fault tripping features.

Each load center bus has an undervoltage relay which initiates an alarm in the main control room upon loss of bus voltage.

Load center transformers have transformer winding temperature relays (device 49T) which give an alarm on transformer overload.

480-V Motor Control Center

Motor control center feeders for low-voltage (460 V) motors have molded case circuit breakers (magnetic or motor circuit protectors) and motor starters. Motor starters are provided with thermal units (overload heaters) or current sensors. Other feeders have molded case circuit breakers with thermal and magnetic trip elements for overload and short circuit protection.

Non-Class 1E ac motor-operated valves are protected by thermal overload devices. Thermal overload devices are selected and sized so as to provide the necessary protection while minimizing the probability of spurious interruptions of valve actuation.

8.3.1.1.2 Standby AC Power Supply

8.3.1.1.2.1 Onsite Standby Diesel Generators

Two onsite standby diesel generator units, each furnished with its own support subsystems, provide power to the selected plant nonsafety-related ac loads. Power supplies to each diesel generator subsystem components are provided from separate sources to maintain reliability and operability of

the onsite standby power system. These onsite standby diesel generator units and their associated support systems are classified as AP1000 Class D, defense-in-depth systems.

The onsite standby diesel generator function to provide a backup source of electrical power to onsite equipment needed to support decay heat removal operation during reduced reactor coolant system inventory, midloop, operation is identified as an important nonsafety-related function. The standby diesel generators are included in the Investment Protection Short-Term Availability Controls described in Section 16.3 and the Design Reliability Assurance Program described in Section 17.4.

Each of the generators is directly coupled to the diesel engine. Each diesel generator unit is an independent self-contained system complete with necessary support subsystems that include:

- Diesel engine starting subsystem
- Combustion air intake and engine exhaust subsystem
- Engine cooling subsystem
- Engine lubricating oil subsystem
- Engine speed control subsystem
- Generator, exciter, generator protection, monitoring instruments, and controls subsystems

The diesel-generator starting air subsystem consists of an ac motor-driven, air-cooled compressor, a compressor inlet air filter, an air-cooled aftercooler, an in-line air filter, refrigerant dryer (with dew point at least 10°F less than the lowest normal diesel generator room temperature), and an air receiver with sufficient storage capacity for three diesel engine starts. The starting air subsystem will be consistent with manufacturer's recommendations regarding the devices to crank the engine, duration of the cranking cycle, the number of engine revolutions per start attempt, volume and design pressure of the air receivers, and compressor size. The interconnecting stainless steel piping from the compressor to the diesel engine dual air starter system includes air filters, moisture drainers, and pressure regulators to provide clean dry compressed air at normal diesel generator room temperature for engine starting.

The diesel-generator combustion air intake and engine exhaust subsystem provides combustion air directly from the outside to the diesel engine while protecting it from dust, rain, snow and other environmental particulates. It then discharges exhaust gases from the engine to the outside of the diesel generator building more than 20 feet higher than the air intake. The combustion air circuit is separate from the ventilation subsystems and includes weather protected dry type inlet air filters piped directly to the inlet connections of the diesel engine-mounted turbochargers. The combustion air filters are capable of reducing airborne particulate material, assuming the maximum expected airborne particulate concentration at the combustion air intake. Each engine is provided with two filters as shown in Figure 8.3.1-4. A differential pressure gauge is installed across each filter to determine the need for filter replacement. The engine exhaust gas circuit consists of the engine exhaust gas discharge pipes from the turbocharger outlets to a single vertically mounted outdoor silencer which discharges to the atmosphere. Manufacturer's recommendations are considered in the design of features to protect the silencer module and other system components from possible clogging due to adverse atmospheric conditions, such as dust storms, rain, ice, and snow.

The diesel-generator engine cooling system is an independent closed loop cooling system, rejecting engine heat through two separate roof-mounted, fan-cooled radiators. The system consists of two separate cooling loops each maintained at a temperature required for optimum engine performance by separate engine-driven coolant water circulating pumps. One circuit cools the engine cylinder

block, jacket, and head area, while the other circuit cools the oil cooler and turbocharger aftercooler. The cooling water in each loop passes through a three-way self-contained temperature control valve which modulates the flow of water through or around the radiator, as necessary, to maintain required water temperature. The temperature control valve has an expanding wax-type temperature-sensitive element or equivalent. The cooling circuit, which cools the engine cylinder blocks, jacket, and head areas, includes a keep-warm circuit consisting of a temperature controlled electric heater and an ac motor-driven water circulating pump.

The diesel-generator engine lubrication system is contained on the engine skid and includes an engine oil sump, a main engine driven oil pump and a continuous engine prelube system consisting of an ac and dc motor driven prelube pump and electric heater. The prelube system maintains the engine lubrication system in service when the diesel engine is in standby mode. The lube oil is circulated through the engine and various filters and coolers to maintain the lube oil properties suitable for engine lubrication.

The diesel generator engine fuel oil system consists of an engine-mounted, engine-driven fuel oil pump that takes fuel from the fuel oil day tank, and pumps through inline oil filters to the engine fuel injectors and a separate recirculation circuit with a fuel oil cooler. The recirculation circuit discharges back to the fuel oil day tank that is maintained at the proper fuel level by the diesel fuel oil storage and transfer system.

The onsite standby diesel generators are provided with necessary controls and indicators for local or remote monitoring of the operation of the units. Essential parameters are monitored and alarmed in the main control room via the plant data display and processing system as described in Chapter 7. Indications and alarms that are available locally and in the main control room are listed in Table 8.3.1-5.

The design of the onsite standby diesel generators does not ensure functional operability or maintenance access or support plant recovery following design basis events. Maintenance accessibility is provided consistent with the system nonsafety-related functions and plant availability goals.

The piping and instrumentation diagrams for the onsite standby diesel generator units and the associated subsystems are shown on Figures 8.3.1-4 and 8.3.1-5.

The onsite standby power supply system is shown schematically on one line diagram, Figure 8.3.1-1.

The onsite diesel generators will be procured in accordance with an equipment specification which will include requirements based upon the manufacturer's standards and applicable recommendations from documents such as NUREG/CR-0660 (Reference 15). Capability to detect system leakage and to prevent crankcase explosions will be based upon manufacturer's recommendations. Control of moisture in the starting air system by the equipment described above will be based upon manufacturer's recommendations. Dust and dirt in the diesel generator room is controlled by the diesel generator building ventilation system described in Subsection 9.4.10. Personnel training is addressed as part of overall plant training in Subsection 13.2.6. Automatic engine prelube by the equipment described above will be based upon manufacturer's recommendations. Testing, test loading and preventive maintenance is addressed as part of overall plant testing and maintenance in Chapter 13. Instrumentation to support diagnostics during operation is shown on Figure 8.3.1-4. The overall diesel building ventilation design is described in Subsection 9.4.10 and the combustion air systems are described above. The fuel oil storage and handling system is described in Subsection 9.5.4. High temperature insulation will be based upon manufacturer's recommendations. Response to the effects of engine vibration will be based upon manufacturer's recommendations. Diesel building floor coatings are described in Subsections 6.1.2.1.4 and 6.1.3.2. The diesel

generators will be procured to be consistent with the diesel generator building HVAC system described in Subsection 9.4.10.

8.3.1.1.2.2 Generator

Each generator is a direct-shaft driven, air-cooled self ventilated machine. The generator enclosure is open drip-proof type that facilitates free movement of ventilation air. The generator component design is in compliance with the NEMA MG-1 (Reference 1) requirements.

Each generator produces its rated power at 6900 V, 60 Hz. Each generator continuous rating is based on supplying the electrical ac loads listed in Tables 8.3.1-1 or 8.3.1-2. The loads shown on Tables 8.3.1-1 and 8.3.1-2 represent a set of nonsafety-related loads which provide shutdown capability using nonsafety-related systems. The generators can also provide power for additional investment protection ac loads. The plant operator would normally provide power to these loads by de-energizing one of those system components that are redundantly supplied by both the diesel generators. The diesel generator design is compatible with the step loading requirements identified in Tables 8.3.1-1 and 8.3.1-2. The generator exciter and voltage regulator systems are capable of providing full voltage control during operating conditions including postulated fault conditions.

Each generator has a set of potential and current transformers for protective relaying and metering purposes.

The following generator protection functions are provided via relays that are mounted on the local generator control panel:

> Differential (87), overcurrent (50/51), reverse power (32), underfrequency (81), under/over voltage (27/59), loss of excitation (40), ground fault (51g), negative sequence (46), synchronization check (25), voltage balance (60).
>
> **Note**: The number in the parentheses identifies the ANSI device designation.

8.3.1.1.2.3 Onsite Standby Power System Performance

The onsite standby power system provides reliable ac power to the various plant system electrical loads shown on Tables 8.3.1-1 and 8.3.1-2. These loads represent system components that enhance an orderly plant shutdown under emergency conditions. Additional loads that are for investment protection can be manually loaded on the standby power supply after the loads required for orderly shutdown have been satisfied. The values listed in the "Operating Load (kW)" column of Tables 8.3.1-1 and 8.3.1-2 represent nominal values of the actual plant loads.

Both the diesel engine and the associated generator are rated based on 104°F ambient temperature at 1000 ft elevation as standard site conditions. The selected unit rating has a design margin to accommodate possible derating resulting from other site conditions.

The Turkey Point Units 6 & 7 site conditions provided in Sections 2.1 and 2.3 are bounded by the standard site conditions used to rate both the diesel engine and the associated generator in Subsection 8.3.1.1.2.3.

The diesel generator unit is able to reach the rated speed and voltage and be ready to accept electrical loads within 120 seconds after a start signal.

Each generator has an automatic load sequencer to enable controlled loading on the generator. The automatic load sequencer connects selected loads at predetermined intervals. This feature allows

recuperation of generator voltage and frequency to rated values prior to the connection of the next load.

For sequential and manual loading of the onsite standby diesel generator, see Tables 8.3.1-1 and 8.3.1-2.

To enable periodic testing, each generator has synchronizing equipment at a local panel as well as in the main control room.

The logic diagram for diesel generator initiating circuit is shown in Figure 8.3.1-2.

8.3.1.1.2.4 Operation, Inspection, and Maintenance

Operation, inspection and maintenance (including preventive, corrective, and predictive maintenance) procedures consider both the diesel generator manufacturer's recommendations and industry diesel working group recommendations.

8.3.1.1.3 Ancillary ac Diesel Generators

Power for Class 1E post-accident monitoring, MCR lighting, MCR and divisions B and C I&C room ventilation and for refilling the PCS water storage tank and the spent fuel pool when no other sources of power are available is provided by two ancillary ac diesel generators located in the annex building. The ancillary generators are not needed for refilling the PCS water storage tank, spent fuel pool makeup, post-accident monitoring or lighting for the first 72 hours following a loss of all other ac sources.

The generators are classified as AP1000 Class D. The generators are commercial, skid-mounted, packaged units and can be easily replaced in the event of a failure. Generator control is manual from a control integral with the diesel skid package. These generators are located in the portion of the Annex Building that is a seismic Category II structure.

For these systems and components, the design of equipment anchorages is consistent with the SSE design of equipment anchorages of seismic Category I items and there should be no spatial interaction with any other non-seismic SSC that could adversely interact to prevent the functioning of the post-72 hour SSCs following an SSE; no dynamic qualification of the active equipment is necessary. Features of this structure which protect the function of the ancillary generators are analyzed and designed for Category 5 hurricanes, including the effects of sustained winds, maximum gusts, and associated wind-borne missiles.

The fuel for the ancillary generators is stored in a tank located in the same room as the generators. The fuel tank, piping, and valves are analyzed to show that they withstand an SSE. The tank includes provisions for venting to the outside atmosphere and for refilling from a truck or other mobile source of fuel. The tank is seismic Category II and holds sufficient fuel for 4 days of operation.

Each ancillary generator output is connected to a distribution panel located in the same room as the generators. Each distribution panel has an incoming circuit breaker and outgoing feeder circuit breakers. The outgoing feeder circuit breakers are connected to cables that are routed to the divisions B and C voltage regulating transformers and to the passive containment cooling system recirculation pumps (see Figure 8.3.1-3).

8.3.1.1.4 Electrical Equipment Layout

The main ac power system distributes ac power to the reactor, turbine, and balance of plant (BOP) auxiliary electrical loads for startup, normal operation, and normal/emergency shutdown.

The medium voltage switchgear ES1 and ES2 are located in the electrical switchgear rooms 1 and 2 of the annex building. The incoming power is supplied from the unit auxiliary transformers ET2A and ET2B (X windings) via nonsegregated buses. The nonsegregated buses are routed from the transformer yard to the annex building in the most direct path practical.

The switchgear ES3, ES4, ES5, and ES6 are located in the turbine building electrical switchgear rooms. The incoming power is supplied from the unit auxiliary transformers ET2A and ET2B (Y windings) via nonsegregated buses to ES3 and ES4 and from ET2A and ET2B (X windings) to ES5 and ES6. Switchgear ES7 is located in the auxiliary boiler room in the turbine building.

The Class 1E medium voltage circuit breakers, ES31, ES32, ES41, ES42, ES51, ES52, ES61, and ES62, for four reactor coolant pumps are located in the auxiliary building.

The 480 V load centers are located in the turbine building electrical switchgear rooms 1 and 2 and in the annex building electrical switchgear rooms 1 and 2 based on the proximity of loads and the associated 6.9 kV switchgear. Load center 71 is located in the auxiliary boiler room in the turbine building.

The 480 V motor control centers are located throughout the plant to effectively distribute power to electrical loads. The load centers and motor control centers are free standing with top or bottom cable entry and front access. The number of stacks/cubicles varies for each location.

8.3.1.1.5 Heat Tracing System

The electric heat tracing system is nonsafety-related and provides electrical heating where temperature above ambient is required for system operation and freeze protection.

The electric heat tracing system is part of the AP1000 permanent nonsafety-related loads and is powered from the diesel backed 480 V ac motor control centers through 480 V - 208Y/120V transformers and distribution panels.

8.3.1.1.6 Containment Building Electrical Penetrations

The electrical penetrations are in accordance with IEEE 317 (Reference 2).

The penetrations conform to the same functional service level as the cables, (for example, low-level instrumentation is in a separate nozzle from power and control). The same service class separation requirements apply within inboard/outboard terminal boxes.

Individual electrical penetrations are provided for each electrical service level and follow the same raceway voltage grouping described in Subsection 8.3.1.3.4. Optical fibers are installed in instrumentation and control or low voltage power electric penetrations.

The electrical penetrations conductor modules are in penetrations of the same Service Class. Modules for instrumentation signals will be in instrumentation penetrations; modules for control power (e.g., 120/125/250V) will be in control power penetrations; modules for low voltage power (e.g., 600 Vac) will be in low voltage power penetrations.

It is possible to combine low voltage power with control power in the same electrical penetration assembly.

Penetrations carrying medium voltage power cables have thermocouples to monitor the temperature within the assembly at the spot expected to have the hottest temperature.

Electrical circuits passing through electrical penetrations have primary and backup protective devices. These devices coordinate with the thermal capability curves (I^2t) of the penetration assemblies. The penetrations are rated to withstand the maximum short-circuit currents available either continuously without exceeding their thermal limit, or at least longer than the field cables of the circuits so that the fault or overload currents are interrupted by the protective devices prior to a potential failure of a penetration. Penetrations are protected for the full range of currents up to the maximum short circuit current available.

Primary and backup protective devices protecting Class 1E circuits are Class 1E in accordance with IEEE 741 (Reference 10). Primary and backup protective devices protecting non-Class 1E circuits are non-Class 1E.

Penetration overcurrent protection coordination curves are generated based on the protection requirements specified by the penetration equipment manufacturer. When necessary, penetrations are protected for instantaneous overcurrent by current limiting devices such as current-limiting fuses, current-limiting breakers, or reactors.

Procedures implement periodic testing of protective devices that provide penetration overcurrent protection. A sample of each different type of overcurrent device is selected for periodic testing during refueling outages. Testing includes:

- Verification of thermal and instantaneous trip characteristics of molded case circuit breakers.
- Verification of long time, short time, and instantaneous trips of medium voltage vacuum circuit breakers.
- Verification of long time, short time, and instantaneous trips of low voltage air circuit breakers.
- Verification of Class 1E and non-Class 1E dc protective device characteristics (except fuses) per manufacturer recommendations, including testing for overcurrent interruption and/or fault current limiting.

Penetration protective devices are maintained and controlled under the plant configuration control program. A fuse control program, including a master fuse list, is established based on industry operating experience.

8.3.1.1.7 Grounding System

The AP1000 grounding system will comply with the guidelines provided in IEEE 665 (Reference 18) and IEEE 1050 (Reference 20). The grounding system consists of the following four subsystems:

- Station grounding grid
- System grounding
- Equipment grounding
- Instrument/computer grounding

The station grounding grid subsystem consists of buried, interconnected bare copper conductors and ground rods (Copperweld) forming a plant ground grid matrix. The subsystem will maintain a uniform ground potential and limit the step-and-touch potentials to safe values under all fault conditions.

The system grounding subsystem provides grounding of the neutral points of the main generator, main step-up transformers, auxiliary transformers, load center transformers, and onsite standby diesel generators. The main and diesel generator neutrals will be grounded through grounding transformers providing high-impedance grounding. The main step-up and load center transformer

neutrals will be grounded solidly. The auxiliary (unit and reserve) transformer secondary winding neutrals will be resistance grounded.

The equipment grounding subsystem provides grounding of the equipment enclosures, metal structures, metallic tanks, ground bus of switchgear assemblies, load centers, MCCs, and control cabinets with two ground connections to the station ground grid.

The instrument/computer grounding subsystem provides plant instrument/computer grounding through separate radial grounding systems consisting of isolated instrumentation ground buses and insulated cables. The radial grounding systems are connected to the station grounding grid at one point only and are insulated from all other grounding circuits.

A grounding grid system design within the plant boundary includes determination of step and touch potentials and ensuring that they are within the acceptable limit for personal safety. The soil resistivity test data for the soil samples from the existing Turkey Point Unit has been analyzed and used in the grounding grid system design. The engineered fill for the Units 6 & 7 will be similar to the existing unit's fill. The ground grid conductor size was determined using methodology outlined in IEEE 80, *IEEE Guide for Safety in AC Substation Grounding* (Reference 201) and a grid configuration for the site was created. The grid configuration was modeled in conjunction with the soil model. The resulting step and touch potentials are within the acceptable limits.

8.3.1.1.8 Lightning Protection

The lightning protection system, consisting of air terminals and ground conductors, will be provided for the protection of exposed structures and buildings housing safety-related and fire protection equipment in accordance with NFPA 780 (Reference 19). Also, lightning arresters are provided in each phase of the transmission lines and at the high-voltage terminals of the outdoor transformers. The isophase bus connecting the main generator and the main transformer and the medium-voltage switchgear is provided with lightning arresters. In addition, surge suppressors are provided to protect the plant instrumentation and monitoring system from lightning-induced surges in the signal and power cables connected to devices located outside.

Direct-stroke lightning protection for facilities is accomplished by providing a low-impedance path by which the lightning stroke discharge can enter the earth directly. The direct-stroke lightning protection system, consisting of air terminals, interconnecting cables, and down conductors to ground, are provided external to the facility in accordance with the guidelines included in NFPA 780. The system is connected directly to the station ground to facilitate dissipation of the large current of a direct lightning stroke. The lightning arresters and the surge suppressors connected directly to ground provide a low-impedance path to ground for the surges caused or induced by lightning. Thus, fire or damage to facilities and equipment resulting from a lightning stroke is avoided.

In accordance with IEEE 665-1995, *IEEE Guide for Generating Station Grounding* (Section 8.3, Reference 18), a lightning protection risk assessment for the structures comprising the Units 6 & 7 was performed based on the methodology in NFPA 780-2008, *Standard for Installation of Lightning Protection Systems*, 2008 Edition (Reference 202). Lightning protection is provided for the Units 6 & 7 structures in accordance with NFPA 780-2008. The zone of protection is based on the elevations and geometry of the structures. It includes the space covered by a rolling sphere having a radius sufficient to cover the structure to be protected. The zone of protection method is based on the use of ground masts, air terminals, and shield wires. Either copper or aluminum is used for lightning protection. Lightning protection grounding is interconnected with the station/switchyard grounding system.

8.3.1.2 Analysis

The ac power system is non-Class 1E and is not required for safe shutdown. Compliance with existing regulatory guides and General Design Criteria is covered in Table 8.1-1 of Section 8.1.

8.3.1.3 Raceway/Cable

8.3.1.3.1 General

The raceway system for non-Class 1E ac circuits complies with IEEE 422 (Reference 3) in respect to installation and support of cable runs between electrical equipment including physical protection. Raceway systems consist primarily of cable tray and wireway.

8.3.1.3.2 Load Groups Segregation

There are two nonsafety-related load groups associated with different transformers, buses, and onsite standby diesel generators. No physical separation is required as these two ac load groups are non-Class 1E and nonsafety-related.

8.3.1.3.3 Cable Derating and Cable Tray Fill

Cable Derating

The power and control cable insulation is designed for a conductor temperature of 90°C. The allowable current carrying capacity of the cable is based on the insulation design temperature while the surrounding air is at an ambient temperature of 65°C for the containment and 40 to 50°C for other areas. Power cables, feeding loads from switchgear, load centers, motor control centers, and distribution panels are sized at 125 percent of the full-load current at a 100-percent load factor.

The power cable ampacities are in accordance with the Insulated Cable Engineers Association publications (Reference 4 and 11), and National Electric Code (Reference 5). The derating is based on the type of installation, the conductor and ambient temperature, the number of cables in a raceway, and the grouping of the raceways. A further derating of the cables is applied for those cables which pass through a fire barrier. The method of calculating these derating factors is determined from the Insulated Cable Engineers Association publications and other applicable standards.

Instrumentation cable insulation is also designed for a conductor temperature of 90°C. The operating power of these cables is low (usually mV or mA) and does not cause cable overheating at the maximum design ambient temperature.

For circuits that are routed partly through conduit and partly through trays or underground ducts, the cable size is based on the ampacity in that portion of the circuit with the lowest indicated current carrying capacity.

Cable Tray Fill

Cable tray design is based on random cable fill of 40 percent of usable tray depth. If tray fill exceeds the above stated maximum fill, tray fill will be analyzed and the acceptability documented.

Conduit fill design is in compliance with Tables 1, 2, 3, and 4 of Chapter 9, National Electrical Code (Reference 5).

8.3.1.3.4 Raceway and Cable Routing

When cable trays are arranged in a vertical array they are arranged physically from top to bottom, in accordance with the function and voltage class of the cables as follows:

- Medium voltage power (6.9 kV)
- Low voltage power (480 Vac, 208Y/120 Vac, 125 Vdc/250 Vdc)
- 120 Vac/125 Vdc/250 Vdc signal and control (if used)
- Instrumentation (analog and digital)

480 Vac, 208Y/120 Vac, 125 Vdc/250 Vdc power cables may be mixed with 120 Vac/125 Vdc/ 250 Vdc signal and control cables.

Separate raceways are provided for medium voltage power, low voltage power and control, as well as instrumentation cables.

Non-Class 1E raceways and supports installed in seismic Category I structures are designed and/or physically arranged so that the safe shutdown earthquake could not cause unacceptable structural interaction or failure of seismic Category I components.

Raceways are kept at a reasonable distance from heat sources such as steam piping, steam generators, boilers, high and low pressure heaters, and any other actual or potential heat source. Cases of heat source crossings are evaluated and supplemental heat shielding is used if necessary.

For Class 1E raceway and cable routing see Subsection 8.3.2.

8.3.1.4 Inspection and Testing

Preoperational tests are conducted to verify proper operation of the ac power system. The preoperational tests include operational testing of the diesel load sequencer and diesel generator capacity testing.

Procedures are established for periodic verification of proper operation of the Onsite AC Power System capability for automatic and manual transfer from the preferred power supply to the maintenance power supply and return from the maintenance power supply to the preferred power supply.

8.3.1.4.1 Diesel Load Sequencer Operational Testing

The load sequencer for each standby diesel generator is tested to verify that it produces the appropriate sequencing signals within five (5) seconds of the times specified in Tables 8.3.1-1 and 8.3.1-2. The five second margin is sufficient for proper diesel generator transient response.

8.3.1.4.2 Standby Diesel Generator Capacity Testing

Each standby diesel generator is tested to verify the capability to provide 4000 kW while maintaining the output voltage and frequency within the design tolerances of 6900±10% Vac and 60±5% Hz. The 4000 kW capacity is sufficient to meet the loads listed in Tables 8.3.1-1 and 8.3.1-2. The test duration will be the time required to reach engine temperature equilibrium plus 2.5 hours. This duration is sufficient to demonstrate long-term capability.

8.3.1.4.3 Ancillary Diesel Generator Capacity Testing

Each ancillary diesel generator is tested to verify the capability to provide 35 kW while maintaining the output voltage and frequency within the design tolerances of 480±10% Vac and 60±5% Hz. The 35 kW capacity is sufficient to meet the loads listed in Table 8.3.1-4. The test duration will be the time required to reach engine temperature equilibrium plus 2.5 hours. This duration is sufficient to demonstrate long-term capability.

8.3.2 DC Power Systems

8.3.2.1 Description

The plant dc power system is comprised of independent Class 1E and non-Class 1E dc power systems. Each system consists of ungrounded stationary batteries, dc distribution equipment, and uninterruptible power supply (UPS).

The Class 1E dc and UPS system provides reliable power for the safety-related equipment required for the plant instrumentation, control, monitoring, and other vital functions needed for shutdown of the plant. In addition, the Class 1E dc and UPS system provides power to the normal and emergency lighting in the main control room and at the remote shutdown workstation.

The Class 1E dc and UPS system is capable of providing reliable power for the safe shutdown of the plant without the support of battery chargers during a loss of all ac power sources coincident with a design basis accident (DBA). The system is designed so that no single failure will result in a condition that will prevent the safe shutdown of the plant.

The non-Class 1E dc and UPS system provides continuous, reliable electric power to the plant non-Class 1E control and instrumentation loads and equipment that are required for plant operation and investment protection and to the hydrogen igniters located inside containment. Operation of the non-Class 1E dc and UPS system is not required for nuclear safety. See Subsection 8.3.2.1.2.

The batteries for the Class 1E and non-Class 1E dc and UPS systems are sized in accordance with IEEE 485 (Reference 6). The operating voltage range of the Class 1E batteries and of the EDS5 turbine generator motor load support batteries is 210 to 280 Vdc. The maximum equalizing charge voltage for the Class 1E and EDS5 batteries is 280 Vdc. The nominal system voltage is 250 Vdc. The operating voltage range of non-Class 1E EDS1 through EDS4 batteries is 105 to 140 Vdc. The maximum equalizing charge voltage for non-Class 1E EDS1 through EDS4 batteries is 140 Vdc. The nominal system voltage is 125 Vdc for non-Class 1E EDS1 through EDS4.

The qualification test program for AP1000 24-hour and 72-hour class 1E batteries meets or exceeds the requirements of IEEE Standard 323, IEEE Standard 344, and IEEE Standard 535, including required and recommended margins, and it is in regulatory compliance with Regulatory Guides 1.89, 1.100, and 1.158. The test program requires that the battery be subjected to accelerated thermal aging and discharge cycling (wear aging) in accordance with IEEE Standard 323 and IEEE Standard 535 over its qualified life objective followed by the DBE seismic event performed in accordance with IEEE Standard 344. In addition, following the aging process, the test specimens shall be subjected to environmental testing to verify the equipment's ability to operate in postulated abnormal environmental conditions during plant operation. Discharge cycling will be performed as a potential aging mechanism prior to seismic testing using Type 3 modified performance test method in accordance with IEEE Standard 450-2002 at intervals representative of the AP1000 surveillance test requirements of the batteries with 10% margin in the number of discharge cycles, which establishes margin for the expected life of the battery. Thus, magnitude/duration (modified performance test versus service and performance tests) and test interval envelop the AP1000 and industry cycling requirements. If new battery failure modes are detected during the qualification testing, these failure

modes will be evaluated for any potential changes to the technical specification's surveillance requirements and revision to maintenance procedures required to ensure identification of degradation prior to reaching those failure modes during plant operation. Following the qualification process, a report that uniquely describes step-by-step the tests performed and results, and addresses any deficiencies and repairs, including photographs, drawings, and other materials, will be maintained for records.

8.3.2.1.1 Class 1E DC and UPS System

8.3.2.1.1.1 Class 1E DC Distribution

The Class 1E dc distribution is in compliance with applicable General Design Criteria, IEEE standards, and Regulatory Guides listed in Subsection 8.1.4.3. The scope of compliance encompasses physical separation, electrical isolation, equipment qualification, effects of single active component failure, capacity of battery and battery charger, instrumentation and protective devices, and surveillance test requirements. The Class 1E dc components are housed in seismic Category I structures. For system configuration and equipment rating, see Class 1E dc one-line diagram, Figure 8.3.2-1. Nominal ratings of major Class 1E dc equipment are listed in Table 8.3.2-5.

There are four independent, Class 1E 250 Vdc divisions, A, B, C, and D. Divisions A and D are each comprising one battery bank, one switchboard, and one battery charger. The battery bank is connected to Class 1E dc switchboard through a set of fuses and a disconnect switch. Divisions B and C are each composed of two battery banks, two switchboards, and two battery chargers. The first battery bank in the four divisions, designated as 24-hour battery bank, provides power to the loads required for the first 24 hours following an event of loss of all ac power sources concurrent with a design basis accident (DBA). The second battery bank in divisions B and C, designated as 72-hour battery bank, is used for those loads requiring power for 72 hours following the same event. Each switchboard connected with a 24-hour battery bank supplies power to an inverter, a 250 Vdc distribution panel, and a 250 Vdc motor control center. Each switchboard connected with a 72-hour battery bank supplies power to an inverter. No load shedding or load management program is needed to maintain power during the required 24-hour safety actuation period.

A single spare battery bank with a spare battery charger is provided for the Class 1E dc and UPS system. In the case of a failure or unavailability of the normal battery bank and the battery charger, permanently installed cable connections allow the spare to be connected to the affected bus by plug-in locking type disconnect along with kirk-key interlock switches. The plug-in locking type disconnect and kirk-key interlock switches permit connection of only one battery bank and battery charger at a time so that the independence of each battery division is preserved. The spare battery and the battery charger can also be utilized as a substitute when offline testing, maintenance, and equalization of an operational battery bank are desired.

Each 250 Vdc Class 1E battery division and the spare battery bank are separately housed as described in Subsection 8.3.2.1.3.

Each battery bank, including the spare, has a battery monitor system that detects battery open-circuit conditions and monitors battery voltage. The battery monitor provides a trouble alarm in the main control room. The battery monitors are not required to support any safety-related function. Monitoring and alarming of dc current and voltages are through the plant control system which includes a battery discharge rate alarm. AP1000 generally uses fusible disconnect switches in the Class 1E dc system. If molded-case circuit breakers are used for dc applications, they will be sized to meet the dc interrupting rating requirements.

The Class 1E dc switchboards employ fusible disconnect switches and have adequate short circuit and continuous-current ratings. The main bus bars are braced to withstand mechanical forces

resulting from a short-circuit current. Fused transfer switch boxes, equipped with double pole double throw transfer switches, are provided to facilitate battery testing, and maintenance.

Battery chargers are connected to dc switchboard buses. The input ac power for the Class 1E dc battery chargers is supplied from non-Class 1E 480 Vac diesel generator backed motor control centers. The battery chargers provide the required isolation between the non-1E ac and the Class 1E dc electrical systems. The battery chargers are qualified as isolation devices in accordance with IEEE 384 (Reference 7) and Regulatory Guide 1.75. Each battery charger has an input ac and output dc circuit breaker for the purpose of power source isolation and required protection. Each battery charger prevents the ac supply from becoming a load on the battery due to a power feedback as a result of the loss of ac power to the chargers. Each battery charger has a built-in current limiting circuit, adjustable between 110 to 125 percent of its rating to hold down the output current in the event of a short circuit or overload on the dc side. The output of the charger is ungrounded and filtered. The output float and equalizing voltages are adjustable. The battery chargers have an equalizing timer and a manual bypass switch to permit periodic equalizing charges. Each charger is capable of providing the continuous demand on its associated dc system while providing sufficient power to charge a fully discharged battery (as indicated by the nominal load requirements in Tables 8.3.2-1 through 8.3.2-4) within a 24-hour period. The battery chargers are provided with a common failure/trouble alarm.

The Class 1E dc motor control centers operate at 250 Vdc nominal two wire, ungrounded system. The dc motor control centers provide branch circuit protection for the dc motor-operated valves. Motor-operated valves are protected by thermal overload devices in accordance with Regulatory Guide 1.106. Motor overload condition is annunciated in the main control room. The loads fed from the motor control centers are protected against a short-circuit fault by fusible disconnect switches. Reduced-voltage motor controllers limit the starting current to approximately 500 percent of rated current for motors equal to or larger than 5 HP.

The Class 1E dc distribution panels provide power distribution and tripping capability between the 250 Vdc power sources and the assigned safeguard loads indicated on Figure 8.3.2-1.

No site-specific non-Class 1E dc loads are connected to the Class 1E dc system.

8.3.2.1.1.2 Class 1E Uninterruptible Power Supplies

The Class 1E UPS provides power at 208 Y/120 Vac to four independent divisions of Class 1E instrument and control power buses. Divisions A and D each consist of one Class 1E inverter associated with an instrument and control distribution panel and a backup voltage regulating transformer with a distribution panel. The inverter is powered from the respective 24-hour battery bank switchboard. Divisions B and C each consist of two inverters, two instrument and control distribution panels, and a voltage regulating transformer with a distribution panel. One inverter is powered by the 24-hour battery bank switchboard and the other, by the 72-hour battery bank switchboard. For system configuration and equipment rating, see Figures 8.3.2-1 and 8.3.2-2. The nominal ratings of the Class 1E inverters and the voltage regulating transformers are listed in Table 8.3.2-5. Under normal operation, the Class 1E inverters receive power from the associated battery bank. If an inverter is inoperable or the Class 1E 250 Vdc input to the inverter is unavailable, the power is transferred automatically to the backup ac source by a static transfer switch featuring a make-before-break contact arrangement. The backup power is received from the diesel generator backed non-Class 1E 480 Vac bus through the Class 1E voltage regulating transformer. In addition, a manual mechanical bypass switch is provided to allow connection of backup power source when the inverter is removed from service for maintenance.

In order to supply power during the post-72-hour period following a design basis accident, provisions are made to connect a ancillary ac generator to the Class 1E voltage regulating transformers

(divisions B and C only). This powers the Class 1E post-accident monitoring systems and the lighting in the main control room and ventilation in the MCR and divisions B and C I&C rooms. See Subsection 8.3.1.1.1 for post-72-hour power distribution details, Subsection 9.4.1 for post-72-hour ventilation, and Subsection 9.5.3 for post-72-hour lighting details respectively.

8.3.2.1.2 Non-Class 1E DC and UPS System

The non-Class 1E dc and UPS system consists of the electric power supply and distribution equipment that provide dc and uninterruptible ac power to the plant non-Class 1E dc and ac loads that are critical for plant operation and investment protection and to the hydrogen igniters located inside containment. The non-class 1E dc and UPS system is comprised of two subsystems representing two separate power supply trains. The subsystems are located in separate rooms in the annex building. Figure 8.3.2-3, non-Class 1E dc and UPS system one line diagram represents the distribution configuration.

Each of the EDS1 and 3, and 2 and 4 subsystems consists of separate dc distribution buses. These two buses can be connected by a normally open circuit breaker to enhance the power supply source availability.

Each dc subsystem includes battery chargers, stationary batteries, dc distribution equipment, and associated monitoring and protection devices.

DC buses 1, 2, 3, and 4 (See Figure 8.3.2-3) provide 125 Vdc power to the associated inverter units that supply the ac power to the non-Class 1E uninterruptible power supply ac system. An alternate regulated ac power source for the UPS buses is supplied from the associated regulating transformers. DC bus 5 supplies large dc motors. This configuration isolates the large motors.

The onsite standby diesel generator backed 480 Vac distribution system provides the normal ac power to the battery chargers. Industry standard stationary batteries that are similar to the Class 1E design are provided to supply the dc power source in case the battery chargers fail to supply the dc distribution bus system loads. The batteries are sized to supply the system loads for a period of at least two hours after loss of all ac power sources.

The dc distribution switchboard houses the dc feeder protection device, dc bus ground fault detection, and appropriate metering. The component design and the current interrupting device selection follow the circuit coordination principles.

The non-Class 1E dc and UPS system is designed to meet the quality guidelines established by Generic Letter 85-06, "Quality Assurance Guidance for ATWS Equipment that is not Safety-Related."

Each of the EDS1 through 4 non-Class 1E dc distribution subsystem bus has provisions to allow the connection of a spare non-Class 1E battery charger should its non-Class 1E battery charger be unavailable due to maintenance, testing, or failure. EDS5 does not require this capability because the only load on the charger is the battery.

The non-Class 1E dc system uses the Class 1E spare battery bank (Figure 8.3.2-1) as a temporary replacement for any primary non-Class 1E battery bank. In this design configuration, the spare Class 1E battery bank would be connected to the non-Class 1E dc bus, but could not simultaneously supply Class 1E safety loads nor perform safety-related functions. For EDS1 through EDS4, this is accomplished by opening the disconnect switch between the two 125 Vdc battery cell strings, which together, comprise the 250 Vdc spare battery. Additionally, the design includes two current interrupting devices placed in series with the main feed from the spare battery that are fault-current activated. This will preserve the spare Class 1E battery integrity should the non-Class 1E bus

experience an electrical fault. This arrangement will not degrade the electrical independence of the Class 1E safety circuits.

8.3.2.1.3 Separation and Ventilation

For the Class 1E dc system, the 24-hour and the 72-hour battery banks are housed in the auxiliary building in ventilated rooms apart from chargers and distribution equipment. The battery rooms are ventilated to limit hydrogen accumulation. Subsection 9.4.1 describes the ventilation system in the battery rooms. Each of the four divisions of dc systems are electrically isolated and physically separated to prevent an event from causing the loss of more than one division.

8.3.2.1.4 Maintenance and Testing

Components of the 125 Vdc and 250 Vdc systems undergo periodic maintenance tests to determine the condition of the system. Batteries are checked for electrolyte level, specific gravity, and cell voltage, and are visually inspected.

The surveillance testing of the Class 1E 250 Vdc system is performed as required by the Technical Specifications.

The inverter DC input protection will be set at least 10% higher than the battery charger trip setpoints to prevent the inverter tripping before the battery charger. The time delay for the inverter high dc input voltage trip will be set higher than the time delay for the battery charger to prevent the inverter tripping before the battery charger.

Procedures are established for inspection and maintenance of Class 1E and non-Class 1E batteries. Class 1E battery maintenance and service testing is performed in conformance with Regulatory Guide 1.129. Batteries are inspected periodically to verify proper electrolyte levels, specific gravity, cell temperature and battery float voltage. Cells are inspected in conformance with IEEE 450 and vendor recommendations.

The clearing of ground faults on the Class 1E dc system is also addressed by procedure. The battery testing procedures are written in conformance with IEEE 450 and the Technical Specifications.

Procedures are established for periodic testing of the Class 1E battery chargers and Class 1E voltage regulating transformers in accordance with the manufacturer recommendations.

- Circuit breakers in the Class 1E battery chargers and Class 1E voltage regulating transformers that are credited for an isolation function are tested through the use of breaker test equipment. This verification confirms the ability of the circuit to perform the designed coordination and corresponding isolation function between Class 1E and non-Class 1E components. Circuit breaker testing is done as part of the Maintenance Rule program and testing frequency is determined by that program.

- Fuses / fuse holders that are included in the isolation circuit are visually inspected.

- Class 1E battery chargers are tested to verify current limiting characteristic utilizing manufacturer recommendation and industry practices. Testing frequency is in accordance with that of the associated battery.

8.3.2.2 Analysis

Compliance with General Design Criteria (GDC) and Regulatory Guides is discussed in Sections 3.1 and 1.9, respectively. Refer to Table 8.1-1 of Section 8.1 for guidelines and applicability of GDC,

Regulatory Guides and IEEE Standards. A failure modes and effects analysis for the Class 1E dc and UPS system is provided in Table 8.3.2-7.

In the event of a loss of offsite power coincident with a main generator trip, ac power to the battery charger is provided from two separate non-Class 1E onsite standby diesel generators. Divisions A and C chargers receive their ac power from one diesel generator, ZOS MG 02A, and division B and D chargers from the second diesel generator, ZOS MG 02B. Provisions are also made to power the post accident monitoring systems and the main control room lighting loads in divisions B and C from ancillary ac generators during the post 72-hour period as described in Subsection 8.3.2.1.1.2.

The Class 1E battery chargers are designed to limit the input (ac) current to an acceptable value under faulted conditions on the output side, however, the voltage regulating transformers do not have active components to limit current; therefore, the Class 1E voltage regulating transformer maximum current is determined by the impedance of the transformer. They have built-in circuit breakers at the input and output sides for protection and isolation. The circuit breakers are coordinated and periodically tested to verify their current-limiting characteristics. They are qualified as isolation devices between Class 1E and non-Class 1E circuits in accordance with IEEE 384 and Regulatory Guide 1.75.

The four divisions are independent, located in separate rooms, cannot be interconnected, and their circuits are routed in dedicated, physically separated raceways. This level of electrical and physical separation prevents the failure or unavailability of a single battery, battery charger, or inverter from affecting adversely a redundant division.

The Class 1E dc and UPS system is designed in accordance with IEEE 308 (Reference 8) and IEEE 946 (Reference 9). Important system component failures are annunciated. The battery monitoring system detects battery open circuit condition and monitors battery voltage. The Class 1E 208Y/120Vac distribution panels are equipped with undervoltage protection. The set of fuses located in the 250 Vdc switchboards provide selective tripping of circuits for a fault to limit the effects of the abnormal condition, minimize system disturbance and protect the battery from complete accidental discharge through a short circuit fault. The Class 1E dc system is ungrounded, thus, a single ground fault does not cause immediate loss of the faulted system. Ground detections with alarms are provided for each division of power so that ground faults can be located and removed before a second ground fault could disable the affected circuit. A spare battery bank and charger enables testing, maintenance, and equalization of battery banks offline. This configuration provides the capability for each battery bank or battery charger to be separately tested and maintained (including battery discharge tests, battery cell replacement, battery charger replacement) without limiting continuous plant operation at 100-percent power.

Short circuit analyses will be performed in accordance with IEEE 946 (Reference 9) and/or other acceptable industry standards or practices to determine fault currents. Circuit interrupting device coordination analyses will be performed in accordance with IEEE 141, 242 (References 16 and 17), and/or other acceptable industry standards or practices.

8.3.2.3 Physical Identification of Safety-Related Equipment

Each safety-related circuit and raceway is given a unique identification number to distinguish between circuits and raceways of different voltage level or separation groups. Each raceway is color coded with indelible ink, paint, or adhesive markers (adhesive markers are not used in the containment) at intervals of 15 feet or less along the length of the raceway and on both sides of floor or wall penetrations. Each cable is color coded at a maximum of 5 feet intervals along the length of the cable and cable markers showing the cable identification number are applied at each end of the cable.

The following color coding is used for identification purposes:

Division	Color Code
A	Brown
B	Green
C	Blue
D	Yellow

8.3.2.4 Independence of Redundant Systems

8.3.2.4.1 General

The routing of cable and the design of raceways prevents a single credible event from disabling a redundant safety-related plant function.

8.3.2.4.2 Raceway and Cable Routing

There are five separation groups for the cable and raceway system: group A, B, C, D, and N. Separation group A contains safety-related circuits from division A. Similarly, separation group B contains safety-related circuits from division B; group C from division C; group D from division D; and group N from nonsafety-related circuits.

Cables of one separation group are run in separate raceway and physically separated from cables of other separation groups. Group N raceways are separated from safety-related groups A, B, C and D. Raceways from group N are routed in the same areas as the safety-related groups according to spatial separation stipulated in Regulatory Guide 1.75 and IEEE 384 with the following exceptions:

- Within the main control room and remote shutdown room (nonhazard areas), the minimum vertical separation for open top cable tray is 3 inches and the minimum horizontal separation is 1 inch.

- Within general plant areas (limited hazard areas), the minimum vertical separation is 12 inches, and the minimum horizontal separation is 6 inches for open top cable trays with low-voltage power circuits for cable sizes <2/0 AWG. For configurations that involve exclusively limited energy content cables (instrumentation and control), these minimum distances are reduced to 3 inches and 1 inch respectively.

- Within panels and control switchboards, the minimum horizontal separation between components or cables of different separation groups (both field-routed and vendor-supplied internal wiring) is 1 inch, and the minimum vertical separation distance is 6 inches.

- For configurations involving an enclosed raceway and an open raceway, the minimum vertical separation is 1 inch if the enclosed raceway is below the open raceway.

The exceptions to the guidance in Regulatory Guide 1.75 are based on test results used to support exceptions to the separation guidance for operating nuclear power plants. A summary of test results from ten electrical separation test programs is documented in Reference 13. These test programs support the AP1000 exceptions.

Non-Class 1E circuits are electrically isolated from Class 1E circuits, and Class 1E circuits from different separation groups are electrically isolated by isolation devices, shielding and wiring

techniques, physical separation (in accordance with Regulatory Guide 1.75 for circuits in raceways), or an appropriate combination thereof.

When isolation devices are used to isolate Class 1E circuits from non-Class 1E circuits, the circuits within or from the Class 1E equipment or devices are identified as Class 1E and are treated as such. Beyond the isolation device(s) these circuits are identified as non-Class 1E and are separated from Class 1E circuits in accordance with the above separation criteria.

Power and control cables are installed in conduits, solid bottom trays, or ventilated bottom trays (ladder-type). Solid tray covers are used in outdoor locations and indoors where trays run in areas where falling debris is a problem. Instrumentation cables are routed in conduit or solid bottom cable tray with solid tray covers as required. The cables are derated for specific application in the location where they are installed as stated in Subsection 8.3.1.3.3. The environmental design of electrical equipment including Class 1E cables under normal and abnormal operating conditions is discussed in Section 3.11.

Separate trays are provided for each voltage service level: 6.9 kV, low voltage power (480 Vac, 208Y/120 Vac, 125 Vdc, 250 Vdc), high-level signal and control (120 Vac, 125 Vdc, 250 Vdc), and low level signal (instrumentation). A tray designed for a single class of cables shall contain only cables of the same class except that low voltage power cables may be routed in raceways with high level signal and control cables if their respective sizes do not differ greatly and if they have compatible operating temperatures. When this is done in trays, the power cable ampacity is calculated as if all cables in the tray are power cable. Low voltage power cable and high level signal and control cable will not be routed in common raceways if the fault current, within the breaker or fuse clearing time, is sufficient to heat the insulation to the ignition point. Vertically stacked trays are arranged from top to bottom as stated in Subsection 8.3.1.3.4. In general, a minimum of 12 inches vertical spacing is maintained between trays of different service levels within the stack.

The electrical penetrations are in accordance with IEEE 317 (Reference 2). Class 1E and non-Class 1E electrical penetration assemblies are maintained in a separate nozzle. The physical separation of the Class 1E electrical penetration assemblies are in accordance with Regulatory Guide 1.75. The containment building penetrations are described in Subsection 8.3.1.1.6.

Raceways installed in seismic Category I structures have seismically designed supports or are shown not to affect safety-related equipment should they fail. Trays are not attached rigidly to seismic Category I equipment. Conduits may be attached to seismic Category I equipment with flexible type connections.

8.3.2.4.3 Hazard Protection

Where redundant safety-related and nonsafety-related raceway systems traverse each other, separation in accordance with Regulatory Guide 1.75 and IEEE 384 is maintained.

Where hazards to safety-related raceways are identified, a predetermined minimum separation is maintained between the break and/or missile source and any safety-related raceway, or a barrier designed to withstand the effects of the hazard is placed to prevent damage to raceway of redundant systems. For details of missile protection and high-energy line break protection, see Sections 3.5 and 3.6, respectively.

Where redundant circuits, devices, or equipment (different separation groups) are exposed to the same external hazard(s), predetermined spatial separation is provided. Where the spatial separation cannot be met, qualified barriers are installed. For details on fire protection, see Subsection 9.5.1.

See Section 3.4 for protection of raceways and the associated equipment against flooding.

8.3.2.4.4 Control of Compliance with Separation Criteria during Design and Installation

The separation group identification described in Subsection 8.3.2.3 provides for the maintenance of separation in the routing of cables and the connection of control boards and panels. The separation group designation on the cable or raceway is assigned to maintain compatibility with a single line diagram channel designation and other cables or raceways routed. The routing is verified during installation. Color identification of equipment and cabling (discussed in Subsection 8.3.2.3) assist field personnel in this effort.

8.3.2.5 Inspection and Testing

Preoperational tests are conducted to verify proper operation of the dc power systems. The preoperational tests include MOV terminal voltage testing and capacity testing of the batteries, chargers, inverters, and regulating transformers.

8.3.2.5.1 Class 1E 24-Hour Battery Capacity Testing

Each Class 1E 24-hour battery is tested to verify the capability to provide its load for 24 hours while maintaining the battery terminal voltage above the minimum voltage specified in Table 8.3.2-5. Analysis will be performed based on the design duty cycle, and testing will be performed with loads which envelope the analyzed battery bank design duty cycle. Each battery is connected to a charger maintained at 270±2 V for a period of at least 24 hours prior to the test to assure the battery is fully charged.

8.3.2.5.2 Class 1E 72-Hour Battery Capacity Testing

Each Class 1E 72-hour battery is tested to verify the capability to provide its load for 72 hours while maintaining the battery terminal voltage above the minimum voltage specified in Table 8.3.2-5. Analysis will be performed based on the design duty cycle, and testing will be performed with loads which envelope the analyzed battery bank design duty cycle. Each battery is connected to a charger maintained at 270±2 V for a period of at least 24 hours prior to the test to assure the battery is fully charged.

8.3.2.5.3 Class 1E Spare Battery Capacity Testing

The Class 1E spare battery is tested to the same requirements as the most severe of the six division batteries.

8.3.2.5.4 Class 1E 24-Hour Inverter Capacity Testing

Each Class 1E 24-hour inverter is tested to verify the capability to provide 12 kW while maintaining the output voltage and frequency within the tolerances specified in Table 8.3.2-5. The 12 kW capacity is sufficient to meet the 24-hour inverter loads listed in Tables 8.3.2-1, 8.3.2-2, 8.3.2-3, and 8.3.2-4. The inverter input voltage will be no more than 210 Vdc during the test to represent the conditions at the battery end of life.

8.3.2.5.5 Class 1E 72-Hour Inverter Capacity Testing

Each Class 1E 72-hour inverter is tested to verify the capability to provide 7 kW while maintaining the output voltage and frequency within the tolerances specified in Table 8.3.2-5. The 7 kW capacity is sufficient to meet the 72-hour inverter loads listed in Tables 8.3.2-2 and 8.3.2-3. The inverter input voltage will be no more than 210 Vdc during the test to represent the conditions at the battery end of life.

8.3.2.5.6 Class 1E 24-Hour Charger Capacity Testing

Each Class 1E 24-hour charger is tested to verify the capability to provide 150 A while maintaining the output voltage within the range specified in Table 8.3.2-5. The 150 A is sufficient to meet the 24-hour loads listed in Tables 8.3.2-1, 8.3.2-2, 8.3.2-3, and 8.3.2-4 while maintaining the corresponding battery charged.

8.3.2.5.7 Class 1E 72-Hour Charger Capacity Testing

Each Class 1E 72-hour charger is tested to verify the capability to provide 125 A while maintaining the output voltage within the range specified in Table 8.3.2-5. The 125 A is sufficient to meet the 72-hour loads listed in Tables 8.3.2-2 and 8.3.2-3 while maintaining the corresponding battery charged.

8.3.2.5.8 Class 1E Regulating Transformer Capacity Testing

Each Class 1E regulating transformer is tested to verify the capability to provide 30 kW while maintaining the output voltage within the tolerance specified in Table 8.3.2-5. The 30 kW capacity is sufficient to meet the inverter loads listed in Tables 8.3.2-1, 8.3.2-2, 8.3.2-3 and 8.3.2-4.

8.3.2.5.9 Motor-Operated Valves Terminal Voltage Testing

The operating voltage supplied to Class 1E motor-operated valves is measured to verify the motor starter input terminal voltage is above the minimum design value of 200 Vdc. The battery terminal voltage will be no more than 210 Vdc during the test to represent the conditions at the battery end of life.

8.3.2.5.10 Non-Class 1E Battery Capacity Testing

Each load group 1, 2, 3, and 4 non-Class 1E battery is tested to verify the capability to provide 500 A for two hours while maintaining the battery terminal voltage above the minimum voltage specified in Table 8.3.2-6. The 500 A is sufficient to meet the loads described in Subsection 8.3.2.1.2. Each battery is connected to a charger maintained at 135±1 V for a period of at least 24 hours prior to the test to assure the battery is fully charged.

8.3.2.5.11 Non-Class 1E Inverter Capacity Testing

Each load group 1, 2, 3, and 4 non-Class 1E inverter is tested to verify the capability to provide 35 kW while maintaining the output voltage and frequency within the tolerances specified in Table 8.3.2-6. The 35 kW capacity is sufficient to meet the loads described in Subsection 8.3.2.1.2.

8.3.2.5.12 Non-Class 1E Charger Capacity Testing

Each load group 1, 2, 3, and 4 non-Class 1E charger is tested to verify the capability to provide 550 A while maintaining the output voltage within the range specified in Table 8.3.2-6. The 550 A is sufficient to meet the loads described in Subsection 8.3.2.1.2 while maintaining the corresponding battery charged.

8.3.3 Combined License Information for Onsite Electrical Power

The design of grounding and lightning protection is addressed in Subsections 8.3.1.1.7 and 8.3.1.1.8.

The plant procedures for the following are addressed in Subsections 8.3.1.1.2.4, 8.3.1.1.6 and 8.3.2.1.4.

- Clearing ground fault on the Class 1E dc system
- Checking sulfated battery plates or other anomalous conditions through periodic inspections
- Battery maintenance and surveillance (for battery surveillance requirements, refer to Chapter 16, Section 3.8)
- Periodic testing of penetration protective devices
- Diesel generator operation, inspection, and maintenance in accordance with manufacturers' recommendations.
- Periodic testing on the battery chargers and voltage regulating transformers.

8.3.4 References

1. NEMA MG-1, "Motors and Generators," 1998.
2. IEEE Standard 317, "Electric Penetration Assemblies in Containment Structures for Nuclear Power Generating Stations," 1983.
3. IEEE Standard 422, "Guide for the Design and Installation of Cable Systems in Power Generating Stations," 1986.
4. ICEA Standard Publication P-54-440, "Ampacities of Cables in Open-Top Cable Trays," 1986.
5. NFPA 70, "National Electrical Code (NEC)," 1999.
6. IEEE Standard 485, "IEEE Recommended Practice for Sizing Lead-Acid Batteries for Stationary Applications," 1997.
7. IEEE Standard 384, "IEEE Standard Criteria for Independence of Class 1E Equipment and Circuits," 1981.
8. IEEE Standard 308, "IEEE Standard Criteria for Class 1E Power Systems for Nuclear Power Generating Stations," 1991.
9. IEEE Standard 946, "IEEE Recommended Practice for the Design of dc Auxiliary Power Systems for Generating Stations," 1992.
10. IEEE Standard 741, "IEEE Standard Criteria for the Protection of Class 1E Power Systems and Equipment in Nuclear Power Generating Stations," 1997.
11. IPCEA Standard Publication P-46-426-1962, "Power Cable Ampacities, Volume I - Copper Conductors."
12. IEEE Standard 450, "IEEE Recommended Practice for Maintenance, Testing and Replacement of Vented Lead-Acid Batteries for Stationary Applications," 1995.
13. Young, G. L. et al., "Cable Separation - What Do Industry Programs Show?," IEEE Transactions of Energy Conversion, September 1990, Volume 5, Number 3, pp 585-602.
14. Not used.

15. NUREG/CR-0660, "Enhancement of On-Site Emergency Diesel Generator Reliability," February 1979.

16. IEEE Standard 141, "IEEE Recommended Practice for Electric Power Distribution for Industrial Plants" (IEEE Red Book), 1993.

17. IEEE Standard 242, "IEEE Recommended Practice for Protection and Coordination of Industrial and Commercial Power Systems" (IEEE Buff Book), 1986.

18. IEEE Standard 665, "IEEE Guide for Generating Station Grounding," 1995.

19. NFPA 780, "Standard for the Installation of Lightning Protection Systems," 2000.

20. IEEE Standard 1050, "IEEE Guide for Instrumentation and Control Equipment Grounding in Generating Stations," 1996

201. Institute of Electrical and Electronics Engineers, *IEEE Guide for Safety in AC Substation Grounding*, IEEE Std 80-2000, August 4, 2000.

202. National Fire Protection Association, *Standard for the Installation of Lightning Protection Systems*, NFPA 780, 2008 ed.

Table 8.3.1-1 (Sheet 1 of 5)
Onsite Standby Diesel Generator ZOS MG 02A Nominal Loads

Automatic Loads (Note 2)					
Item No.	Time Seq. (sec)	Event or Load Description	Rating (hp/kW)	Operating Load (kW) (Note 4)	
				At Power (Note 10)	Shutdown (Note 10)
1.	0	D/G Start Signal is Initiated	-	-	-
2.	TBD	D/G Reaches IDLE Speed (Note 6)	-	-	-
3.	TBD	D/G Reaches Full Speed (Note 6)	-	-	-
4.	120	D/G Breaker Closes, Load Sequencer Starts	-	-	-
5.	120	Load Center Transformer EK11 (Note 7)	2500 kVA	7.5	7.5
6.	120	Load Center Transformer EK12 (Note 7)	2500 kVA	7.5	7.5
7.	120	Annex Bldg Lighting Panel (Note 8)	30 kVA	10	10
8.	120	Annex Bldg Lighting Panel (Note 8)	30 kVA	10	10
9.	120	Aux Bldg Lighting Panel (Note 8)	60 kVA	15	15
10.	120	Aux Bldg Lighting Panel (Note 8)	60 kVA	15	15
11.	120	Turbine Bldg Lighting Panel (Note 8)	40 kVA	7	7
12.	120	Turbine Bldg Lighting Panel (Note 8)	40 kVA	7	7
13.	120	Turbine Bldg Lighting Panel (Note 8)	40 kVA	7	7
14.	120	D/G Bldg Lighting Panel (Note 8)	30 kVA	3	3
15.	120	D/G 2A AC/OC Radiator Fan	25 hp	21	21
16.	120	Diesel Oil Transfer Module Unit Heater A	15 kW	15	15

Table 8.3.1-1 (Sheet 2 of 5)
Onsite Standby Diesel Generator ZOS MG 02A Nominal Loads

Automatic Loads (Note 2)					
Item No.	Time Seq. (sec)	Event or Load Description	Rating (hp/kW)	Operating Load (kW) (Note 4)	
				At Power (Note 10)	Shutdown (Note 10)
17.	120	Diesel Oil Transfer Module Exhaust Fan A	0.5 hp	0.5	0.5
18.	120	D/G A Jacket Water Radiator Fan	25 hp	21	21
19.	120	Class 1E Div. A Regulating XFMR 1	45 kVA	15	15
20.	120	Class 1E Div. C Regulating XFMR 1	45 kVA	15	15
21.	120	Motor-Operated Valves (Note 5)	-	-	-
22.	120	D/G A Fuel Oil Transfer Pump	3 hp	3	3
23.	120	D/G A Bldg Stdby Exhaust Fan 1A	3 hp	3	3
24.	120	D/G A Bldg Stdby Exhaust Fan 2A	3 hp	3	3
25.	120	D/G A Bldg Primary AHU MS 01A Fan	3 hp	3	3
26.	120	D/G A Fuel Oil Cooler Fan	2 hp	2	2
27.	140	Start-up Feed Water Pump A	800 hp	665	0
28.	160	Load Center Transformer EK13 (Note 9)	2500 kVA	7.5	7.5
29.	160	Aux Bldg Lighting Panel (Note 8)	60 kVA	15	15
30.	160	Fuel Oil Day Tank Vault Exhaust Fan A	0.5 hp	0.5	0.5
31.	160	Diesel Fuel Oil Transfer Heater A	90 kW	90	90
32.	160	Service Water Pump A	500 hp	350	350
33.	180	Service Water Cooling Tower Cell Fan A	175 hp	120	120
34.	200	Component Cooling Water Pump A	700 hp	500	500

Table 8.3.1-1 (Sheet 3 of 5)
Onsite Standby Diesel Generator ZOS MG 02A Nominal Loads

Automatic Loads (Note 2)					
Item No.	Time Seq. (sec)	Event or Load Description	Rating (hp/kW)	Operating Load (kW) (Note 4)	
				At Power (Note 10)	Shutdown (Note 10)
35.	240	Normal Residual Heat Removal Pump A	250 hp	0	207
36.	240	RNS Pump Room Fan A	1.5 hp	0	1.5
37.	240	Annex Bldg Equipment Room Return/Exhaust Fan A (Note 12)	20 hp	17	17
38.	240	Annex Bldg Equipment Room AHU MS02A Fan (Note 12)	50 hp	42	42
39.	240	Annex Bldg Swgr Rm AHU MS 05A Fan (Note 12)	50 hp	42	42
40.	240	Annex Bldg Swgr Rm Ret/Exhaust Fan 06A (Note 12)	25 hp	21	21
41.	240	Instrument Air Compressor A	200 hp	166	166
42.	300	Non-1E Battery Charger EDS1-DC-1	117 kVA	88	88
43.	300	Non 1E Battery Room A Exhaust Fan	0.5 hp	0.5	0.5
44.	300	Containment Recirculation Fan A	200 hp	149	149
45.	360	Containment Recirculation Fan D	200 hp	149	149
46.	360	Non-1E Battery Charger EDS3-DC-1	117 kVA	88	88
47.	420	Div. A/C Class 1E Battery Room Exhaust Fan A	5 hp	5	5
		Total Automatically Sequenced Loads (kW)		**2706**	**2249.5**

Table 8.3.1-1 (Sheet 4 of 5)
Onsite Standby Diesel Generator ZOS MG 02A Nominal Loads

Manual Loads (Note 2)				
Item No.	**Time Seq. (sec)**	**Event or Load Description**	**Rating (hp/kW)**	**Operating Load (kW)**
48.		Class 1E Div. A Battery Charger 1 (Note 13)	78 kVA	26
49.	--	Class 1E Div. C Battery Charger 1 (Note 13)	78 kVA	26
50.	--	Class 1E Div. C Battery Charger 2	78 kVA	15
51.	--	Supplemental Air Filtration System Fan A	15 hp	15
52.	--	Supplemental Air Filtration System Electric Heater A	20 kW	20
53.	--	Backup Group 4A Pressurizer Heaters	246 kW	246
54.	--	CRDM Fan 01A	75 hp	62
55.	--	CRDM Fan 01B	75 hp	62
56.	--	Spent Fuel Cooling Pump A	250 hp	200
57.	--	Make-Up Pump A	600 hp	498
58.	--	Non-1E Regulating XFMR EDS1-DT-1	75 kVA	25
59.	--	Non-1E Regulating XFMR EDS3-DT-1	75 kVA	25
60.	--	Main Control Room AHU Supply Fan A (Note 11)	40 hp	34
61.	--	Main Control Room AHU Return Fan A (Note 11)	25 hp	21
62.	--	Div A/C Class 1E Electrical Room AHU Supply Fan A (Note 11)	40 hp	34
63.	--	Div A/C Class 1E Electrical Room Return Fan A (Note 11)	25 hp	21

Table 8.3.1-1 (Sheet 5 of 5)
Onsite Standby Diesel Generator ZOS MG 02A Nominal Loads

Manual Loads (Note 2)				
Item No.	**Time Seq. (sec)**	**Event or Load Description**	**Rating (hp/kW)**	**Operating Load (kW)**
64.	--	Div B/D Class 1E Electrical Room AHU Supply Fan D (Note 11)	25 hp	21
65.	--	Div B/D Class 1E Electrical Room Return Fan D (Note 11)	25 hp	21
66.	--	Air Cooled Chiller Pump 2 (Note 11)	20 hp	17
67.	--	Air Cooled Chiller 2 (Note 11)	375 kW	375
68.	--	CVS Pump Room Fan A (Note 11)	1.5 hp	1.5
		Total Manually Sequenced Loads (kW)		**1765.5**

Notes:

1. Loads listed are for diesel generator ZOS MG 02A.
2. Loads identified in the first portion of the table (AUTOMATIC LOADS) will be loaded without operator action. Loads identified in the second portion of the table (MANUAL LOADS) will be energized at operator discretion based on system needs. Automatic loads may not be started until there is a system need. Not all manually sequenced loads will be operated simultaneously.
3. Time Sequence is counted from the time a diesel generator receives the start signal.
4. The "Operating Load" column shows the load input power requirement from the diesel generator.
5. Motor-operated valves (MOVs) pertaining to various systems will be energized on closure of the diesel generator breaker. Normally the MOV power requirement is for a very short duration (a few seconds); hence, the MOV load will not affect the diesel generator capacity rating.
6. On receipt of the diesel generator start signal, the engine accelerates to a set idle speed. The engine operates at the idle speed for a time to allow bearing oil pressure buildup, proper lubrication of the moving parts, and engine warmup. After a set time delay (to be determined based on vendor selection), the engine will ramp up to the rated operating speed.
7. On restoring the power supply to the diesel backed bus ES1 by closing the diesel generator incoming breaker, the associated unit substation ECS EK 11 and 12 load center transformers are energized. The transformers draw magnetizing current and the no load losses (approx. 0.3 percent of the rating) from the bus.
8. Only a part of the building lighting load is automatically connected to the diesel generator bus. The remaining lighting load is connected via manual action at the operator's discretion.
9. Load Center ECS EK 13 transformer no load losses and magnetizing current is approximately 0.3 percent of the transformer rating.
10. The ‘At Power’ loads are those loads that would be automatically sequenced on the diesel generator following a loss of offsite power and reactor trip from power; i.e., reactor coolant pressure above the residual heat removal system operating pressure. The ‘Shutdown’ loads are those loads that would be automatically sequenced on the diesel generator following a loss of offsite power during a plant shutdown; i.e., reactor coolant pressure below the residual heat removal system operating pressure and the RNS isolation valves open.
11. Air cooled chiller VWS MS 03 is automatically loaded on diesel generator ZOS MG 02B along with the VAS and VBS fans associated with the cooling coils served by this chiller. The redundant air cooled chiller VWS MS 02 and its associated VAS and VBS fans can be manually loaded on diesel generator ZOS MG 02A in case of failures of VWS MS 03 or ZOS MG 02B.
12. Annex building ventilation fans are automatically loaded on diesel generator ZOS MG 02A. The redundant fans can be manually loaded on diesel generator ZOS MG 02B in case of diesel generator or fan failures.
13. To prevent spurious ADS actuation, the 24-hour Class 1E battery chargers should be manually loaded on the diesel generator within 22 hours; before the Automatic Depressurization Actuation (ADS) timer in the Protection and Safety Monitoring System actuates ADS on low battery charger input voltage.

Table 8.3.1-2 (Sheet 1 of 4)
Onsite Standby Diesel Generator ZOS MG 02B Nominal Loads

Automatic Loads (Note 2)					
Item No.	Time Seq. (sec)	Event or Load Description	Rating (hp/kW)	Operating Load (kW)	
				At Power (Note 10)	Shutdown (Note 10)
1.	0	D/G Start Signal is Initiated	-	-	-
2.	TBD	D/G Reaches IDLE Speed (Note 6)	-	-	-
3.	TBD	D/G Reaches Full Speed (Note 6)	-	-	-
4.	120	D/G Breaker Closes, Load Sequencer Starts	-	-	-
5.	120	Load Center Transformer EK21 (Note 7)	2500 kVA	7.5	7.5
6.	120	Load Center Transformer EK22 (Note 7)	2500 kVA	7.5	7.5
7.	120	Annex Bldg Lighting Panel (Note 8)	30 kVA	10	10
8.	120	Annex Bldg Lighting Panel (Note 8)	30 kVA	10	10
9.	120	Aux Bldg Lighting Panel (Note 8)	60 kVA	15	15
10.	120	Aux Bldg Lighting Panel (Note 8)	60 kVA	15	15
11.	120	Turbine Bldg Lighting Panel (Note 8)	40 kVA	7	7
12.	120	Turbine Bldg Lighting Panel (Note 8)	40 kVA	7	7
13.	120	Turbine Bldg Lighting Panel (Note 8)	40 kVA	7	7
14.	120	D/G Bldg Lighting Panel (Note 8)	30 kVA	3	3
15.	120	D/G 2B AC/OC Radiator Fan	25 hp	21	21
16.	120	Diesel Oil Transfer Module Unit Heater B	15 kW	15	15
17.	120	Diesel Oil Transfer Module Exhaust Fan B	0.5 hp	0.5	0.5
18.	120	D/G B Jacket Water Radiator Fan	25 hp	21	21

Table 8.3.1-2 (Sheet 2 of 4)
Onsite Standby Diesel Generator ZOS MG 02B Nominal Loads

Automatic Loads (Note 2)					
Item No.	Time Seq. (sec)	Event or Load Description	Rating (hp/kW)	Operating Load (kW)	
				At Power (Note 10)	Shutdown (Note 10)
19.	120	Class 1E Div. B Regulating XFMR 1	45 kVA	15	15
20.	120	Class 1E Div. D Regulating XFMR 1	45 kVA	15	15
21.	120	Motor-Operated Valves (Note 5)	-	-	-
22.	120	D/G B Fuel Oil Transfer Pump	3 hp	3	3
23.	120	D/G B Bldg Stdby Exhaust Fan 1B	3 hp	3	3
24.	120	D/G B Bldg Stdby Exhaust Fan 2B	3 hp	3	3
25.	120	D/G B Bldg. Primary AHU MS 01B Fan	3 hp	3	3
26.	120	D/G B Fuel Oil Cooler Fan	2 hp	2	2
27.	140	Start-up Feed Water Pump B	800 hp	665	0
28.	160	Load Center Transformer EK23 (Note 9)	2500 kVA	7.5	7.5
29.	160	Aux Bldg Lighting Panel (Note 8)	60 kVA	15	15
30.	160	Fuel Oil Day Tank Vault Exhaust Fan B	0.5 hp	0.5	0.5
31.	160	Diesel Fuel Oil Transfer Heater B	90 kW	90	90
32.	160	Service Water Pump B	500 hp	350	350
33.	180	Service Water Cooling Tower Cell Fan B	175 hp	120	120
34.	180	Main Control Room AHU Supply Fan B	40 hp	34	34
35.	180	Main Control Room AHU Return Fan B	25 hp	21	21
36.	180	Div. B/D Class 1E Electrical Room AHU Supply Fan B	25 hp	21	21

Table 8.3.1-2 (Sheet 3 of 4)
Onsite Standby Diesel Generator ZOS MG 02B Nominal Loads

Automatic Loads (Note 2)					
Item No.	Time Seq. (sec)	Event or Load Description	Rating (hp/kW)	Operating Load (kW)	
				At Power (Note 10)	Shutdown (Note 10)
37.	180	Div B/D Class 1E Electrical Room Return Fan B	25 hp	21	21
38.	180	Div A/C Class 1E Electrical Room AHU Supply Fan C	40 hp	34	34
39.	180	Div A/C Class 1E Electrical Room Return Fan C	25 hp	21	21
40.	180	Air Cooled Chiller Pump 3	20 hp	17	17
41.	200	Component Cooling Water Pump B	700 hp	500	500
42.	220	Air Cooled Chiller 3	375 kW	375	375
43.	240	CVS Pump Room Fan B	1.5 hp	1.5	1.5
44.	240	Instrument Air Compressor B	200 hp	166	166
45.	300	Normal Residual Heat Removal Pump B	250 hp	0	207
46.	300	RNS Pump Room Fan B	1.5 hp	0	1.5
47.	300	Non-1E Battery Charger EDS2-DC-1	117 kVA	88	88
48.	300	Non-1E Battery Room B Exhaust Fan 09B	0.5 hp	0.5	0.5
49.	360	Containment Recirculation Fan B	200 hp	149	149
50.	360	Containment Recirculation Fan C	200 hp	149	149
51.	360	Non-1E Battery Charger EDS4-DC-1	117 kVA	88	88
52.	420	Div. B/D Class 1E Battery Room Exhaust Fan B	1.5 hp	1.5	1.5
		Total Automatically Sequenced Loads (kW)		**3126**	**2669.5**

Table 8.3.1-2 (Sheet 4 of 4)
Onsite Standby Diesel Generator ZOS MG 02B Nominal Loads

Manual Loads (Note 2)				
Item No.	**Time Seq. (sec)**	**Event or Load Description**	**Rating (hp/kW)**	**Operating Load (kW)**
53.	--	Class 1E Div. B Battery Charger 1	78 kVA	26
54.	--	Class 1E Div. B Battery Charger 2	78 kVA	15
55.	--	Class 1E Div. D Battery Charger 1	78 kVA	26
56.	--	Supplemental Air Filtration System Fan B	15 hp	15
57.	--	Supplemental Air Filtration System Electric Heater B	20 kW	20
58.	--	Backup Group 4B Pressurizer Heaters	246 kW	246
59.	--	CRDM Fan 01C	75 hp	62
60.	--	CRDM Fan 01D	75 hp	62
61.	--	Spent Fuel Cooling Pump B	250 hp	200
62.	--	Make-Up Pump B	600 hp	498
63.	--	Non-1E Regulating XFMR EDS2-DT-1	75 kVA	25
64.	--	Annex Bldg Equipment Room Return/Exhaust Fan B	20 hp	17
65.	--	Annex Bldg Equipment Room AHU MS02B Fan	50 hp	42
66.	--	Annex Bldg Swgr Rm AHU MS 05B Fan	50 hp	42
67.	--	Annex Bldg Swgr Rm Ret/Exhaust Fan 06B	25 hp	21
		Total Manually Sequenced Loads (kW)		**1317**

Notes:

1. Loads listed are for diesel generator ZOS MG02B.
2. Loads identified in the first portion of the table (AUTOMATIC LOADS) will be loaded without operator action. Loads identified in the second portion of the table (MANUAL LOADS) will be energized at operator discretion based on system needs. Automatic loads may not be started until there is a system need. Not all manually sequenced loads will be operated simultaneously.
3. Time Sequence is counted from the time a diesel generator receives the start signal.
4. The "Operating Load" column shows the load input power requirement from diesel generator.
5. Motor-operated valves (MOVs) pertaining to various systems will be energized on closure of the diesel generator breaker. Normally the MOV power requirement is for a very short duration (few seconds); hence the MOV load will not affect the diesel generator capacity rating.
6. On receipt of the diesel generator start signal, the engine accelerates to a set idle speed. Engine operates at the idle speed for a time period to allow bearing oil pressure build up, proper lubrication of the moving parts, and engine warmup. After a set time delay (to be determined based on vendor selection), the engine will ramp up to the rated operating speed.
7. On restoring the power supply to the diesel backed bus ES2 by closing diesel generator incoming breaker, the associated unit substation ECS EK 21 and 22 load center transformers are energized. The transformers draw magnetizing current and the no load losses (approx. 0.3 percent of the rating) from the bus.
8. Only a part of the building lighting load is automatically connected to the diesel generator bus. The remaining lighting load is connected via manual action at the operator's discretion.
9. Load Center ECS EK 23 transformer no load losses and magnetizing current is approximately 0.3 percent of the transformer rating.
10. The ‘At Power’ loads are those loads that would be automatically sequenced on the diesel generator following a loss of offsite power and reactor trip from power; i.e., reactor coolant pressure above the residual heat removal system operating pressure. The ‘Shutdown’ loads are those loads that would be automatically sequenced on the diesel generator following a loss of offsite power during a plant shutdown; i.e., reactor coolant pressure below the residual heat removal system operating pressure and the RNS isolation valves open.
11. Air cooled chiller VWS MS 03 is automatically loaded on diesel generator ZOS MG 02B along with the VAS and VBS fans associated with the cooling coils served by this chiller. The redundant air cooled chiller VWS MS 02 and its associated VAS and VBS fans can be manually loaded on diesel generator ZOS MG 02A in case of failures of VWS MS 03 or ZOS MG 02B.
12. Annex building ventilation fans are automatically loaded on diesel generator ZOS MG 02A. The redundant fans can be manually loaded on diesel generator ZOS MG 02B in case of diesel generator or fan failures.
13. To prevent spurious ADS actuation, the 24-hour Class 1E battery chargers should be manually loaded on the diesel generator within 22 hours, before the Automatic Depressurization Actuation (ADS) timer in the Protection and Safety Monitoring System actuates ADS on low battery charger input voltage.

Table 8.3.1-3
Component Data - Main AC Power System
(Nominal Values)

1.	**Main Stepup Transformer**	
		3 single phase, FOA, 65°C rise, liquid filled
2.	**Unit Auxiliary Transformers (UAT 2A/2B)**	
		3 phase, 3 winding H = 70 MVA, OA, 65°C X = 35 MVA, OA, 65°C Y = 35 MVA, OA, 65°C
	Unit Auxiliary Transformer (UAT 2C)	
		3 phase, 2 winding 33 MVA, OA, 65°C
	Reserve Auxiliary Transformers (RAT)	
		3 phase, 3 winding H = 70 MVA, OA, 65°C X = 35 MVA, OA, 65°C Y = 35 MVA, OA, 65°C
3.	**6.9 kV Switchgear**	
		medium voltage metal-clad switchgear Interrupting current rating – 63kA vacuum-type circuit breaker
4.	**480 V Load Centers**	
	Transformers - Indoor, Air-Cooled Ventilated Dry-Type, Fire Retardant:	2500 kVA, AA 3 phase, 60 Hz 6900 - 480 V
		1000 kVA, AA (Load Center 71) 3 phase, 60 Hz 6900 - 480 V
	Main Bus Ampacity	4000 amperes continuous
		2000 amperes continuous (Load Center 71)
	480V Breakers	metal enclosed draw-out circuit breaker or motor-starter (contactor) 65,000 A RMS symmetrical interrupting rating
5.	**480 V Motor Control Centers**	
	Horizontal Bus	800 A continuous rating 65,000 A RMS symmetrical bracing
	Vertical Bus	300 A continuous rating
		65,000 A RMS symmetrical bracing
	Breakers (molded case)	65,000 A RMS symmetrical interrupting rating

Table 8.3.1-4
Post-72 Hours Nominal Load Requirements

Item No.	Description of Loads	Ancillary AC Generator 1	Ancillary AC Generator 2
		Load (kW)	Load (kW)
1.	Post-Accident Monitoring (PAM) Emergency and Panel Lighting (Division B) in Main Control Room and ancillary fans		6.5
2.	Post-Accident Monitoring (PAM) Emergency and Panel Lighting (Division C) in Main Control Room and ancillary fans	6.5	
3[a]	PCS Recirculation Pumps	19.3	19.3
4.	Ancillary Generator Room Lights	0.5	0.5
5.	Ancillary Generator Fuel Tank Heater	1.25 kW	1.25 kW
	Total	27.55 kW	27.55 kW

Note:

a. There are two PCS pumps; however, only one pump will be operating at any point in time on each generator. In case of fire fighting, two pumps (one on each generator) may be used.

Table 8.3.1-5
Indication and Alarm Points
Standby Diesel Generators

Parameter	Indication		Alarm	
	Control Room	Local	Control Room	Local
Lube Oil Pressure Low	No	Yes	Yes	Yes
Lube Oil Temperature High	No	Yes	Yes	Yes
Lube Oil Sump Level Low	No	Yes	No	Yes
Cooling Water Temperature High	Yes	Yes	Yes	Yes
Cooling Water Pressure Low	No	Yes	Yes	Yes
DG Starting Air Pressure Low	Yes	Yes	Yes	Yes

Table 8.3.2-1
250V DC Class 1E Division A Battery
Nominal Load Requirements

Load Description	Power Required (kW)	
	Momentary	**Continuous**
Bus IDSA DS 1 (24 hr Battery Bank)		
Inverter		
Protection and Safety Monitoring System	0	10.6
Emergency Lighting	0	0.3
Containment High Range Monitor	0	0.1
Subtotal	0	11.0
250 Vdc Panel		
Reactor Trip Swgr & Solenoid Valves	7	0.5
250 Vdc MCC		
Motor-operated Valves	453	
Total	460	11.5

Table 8.3.2-2
250V DC Class 1E Division B Battery
Nominal Load Requirements

Load Description	Power Required (kW)	
	Momentary	**Continuous**
Bus IDSB DS 1 (24 hr Battery Bank)		
Inverter		
Protection and Safety Monitoring System	0	10.1
Emergency Lighting and Panel Lighting	0	0.5
Subtotal	0	10.6
250 Vdc Panel		
Reactor Trip Swgr, RCP Trip & Solenoid Valves	12	0.8
250 Vdc MCC		
Motor-operated Valves	290	
Total	302	11.4
BUS IDSB DS 2 (72 hr Battery Bank)		
Inverter		
Protection and Safety Monitoring System	0	3.15
Emergency Lighting and Panel Lighting	0	0.63
Containment High Range Monitor	0	0.12
MCR Supply Duct Radiation Monitor	1.8	0.24
Total	1.8	4.14

Table 8.3.2-3
250V DC Class 1E Division C Battery
Nominal Load Requirements

Load Description	Power Required (kW)	
	Momentary	**Continuous**
Bus IDSC DS 1 (24 hr Battery Bank)		
Inverter		
Protection and Safety Monitoring System	0	10.1
Emergency Lighting and Panel Lighting	0	0.5
Subtotal	0	10.6
250 Vdc Panel		
Reactor Trip Swgr, RCP Trip & Solenoid Valves	12	0.5
250 Vdc MCC		
Motor-operated Valves	173	
Total	185	11.1
BUS IDSC DS 2 (72 hr Battery Bank)		
Inverter		
Protection and Safety Monitoring System	0	3.15
Emergency Lighting and Panel Lighting	0	0.63
Containment High Range Monitor	0	0.12
MCR Supply Duct Radiation Monitor	1.8	0.24
Total	1.8	4.14

Table 8.3.2-4
250V DC Class 1E Division D Battery
Nominal Load Requirements

Load Description	Power Required (kW)	
	Momentary	**Continuous**
Bus IDSD DS 1 (24 hr Battery Bank)		
Inverter		
Protection and Safety Monitoring System	0	10.6
Emergency Lighting	0	0.3
Containment High Range Monitor	0	0.1
Subtotal	0	11.0
250 Vdc Panel		
Reactor Trip Swgr & Solenoid Valves	6	0.8
250 Vdc MCC		
Motor-operated Valves	380	
Total	386	11.8

Table 8.3.2-5
Component Data - Class 1E DC System
(Nominal Values)

a. Battery Bank 250 Vdc (2 - 125 Vdc) 60 lead calcium cells, 2400 Ah. (8 hrs to 1.75 V per cell @ 77°F).
b. Charger AC input - 480 V, 3-phase, 60 Hz; dc output - 250 Vdc, 200 A continuous; float voltage 2.20 to 2.25 V/cell; equalizing charge voltage 2.33 V/cell.
c. Switchboard Main bus 600 A continuous, 50,000 A short circuit bracing; fuse disconnect switch 50,000 A interrupting rating, continuous ratings 200 and 400 A.
d. Spare Switchboard Main bus 1200 A continuous, 50,000 A short circuit bracing; fuse disconnect switch, 50,000 A interrupting rating, continuous rating 1200 A.
e. Motor Control Center Main bus 300 A continuous, vertical bus 300 A continuous, 50,000 A short circuit bracing.
f. Spare Battery Bank 2-125V dc 60 lead calcium cells, 2400 Ah. (8 hrs to 1.75 V per cell @ 77°F).
g. Spare Charger AC input - 480 V, 3-phase, 60 Hz; dc output - 250 Vdc, 200 A continuous; float voltage 2.20 to 2.25 V/cell; equalizing charge voltage - 2.33 V/cell.
h. Uninterruptible Power Supply (UPS) i. Inverter 15 kVA with 250 Vdc input and 208Y/120 Vac, 3-phase, 4-wire, 60 Hz output; ac output voltage regulation of ±2% steady state; output frequency variation within 0.5% of nominal 60 Hz. ii. Voltage Regulating Transformer 45 kVA, 480 V - 208Y/120V, 3-phase, 4-wire.

Note:
Refer to Figures 8.3.2-1 and 8.3.2-2 for the system component configuration.

Table 8.3.2-6 (Sheet 1 of 2)
Component Data - Non-Class 1E DC System EDS1 – EDS4
(Nominal Values)

a. Battery Bank 125 Vdc 60 lead calcium cells, 2400 Ah. (8 hrs to 1.75 V per cell @ 77°F).
b. Charger AC input - 480 V, 3-phase, 60 Hz; dc output - 125 Vdc, 600 A continuous; float voltage - 2.20 to 2.25 V/cell; equalizing charge voltage - 2.33 V/cell.
c. Switchgear Main bus 1200 A continuous, 50,000 A short circuit bracing; breaker 1000A frame size.
d. Spare Charger AC input - 480 V, 3-phase, 60 Hz; dc output - 125 Vdc, 600 A continuous; float voltage - 2.20 to 2.25 V/cell; equalizing charge voltage - 2.33 V/cell.
e. Uninterruptible Power Supply (UPS) i. Inverter 50 kVA with 125 Vdc input and 208 Y/120 Vac, 3-phase, 4-wire, 60 Hz output; ac output voltage regulation of ±2% steady state; output frequency variation within 0.5% of nominal 60 Hz. ii. Voltage Regulating Transformer 75 kVA, 480 V - 208 Y/120 V, 3-phase, 4-wire.

Note:
Refer to Figure 8.3.2-3 for the system component configuration.

Table 8.3.2-6 (Sheet 2 of 2)
Component Data - Non-Class 1E DC System EDS5
(Nominal Values)

a. Battery Bank 250 Vdc (2 - 125 Vdc) 60 lead calcium cells, 2400 Ah. (8 hrs to 1.75 V per cell @ 77°F).
b. Charger AC input - 480 V, 3-phase, 60 Hz; dc output - 250 Vdc, 200 A continuous; float voltage - 2.20 to 2.25 V/cell; equalizing charge voltage - 2.33 V/cell.
c. Switchgear Main bus 600 A continuous, 50,000 A short circuit bracing; breaker 1200 A frame size.

Note:
Refer to Figure 8.3.2-3 for the system component configuration.

Table 8.3.2-7 (Sheet 1 of 4)
Class 1E 250V DC and Class 1E Uninterruptible Power Supplies
Failure Modes and Effects Analysis

Item No.	Description of Components	Safety Function	Plant Operating Mode	Failure Mode(s)	Method of Failure Detection	Failure Effect on System Safety Function Capability	General Remarks
1.	Battery Charger Division A, IDSA DC 1 Division B, IDSB DC 1, 2 Division C, IDSC DC 1, 2 Division D, IDSD DC 1	Provide dc power when ac power available and maintain battery in a charged condition.	A,B	No output	Annunciator in main control room; battery charger failure alarm for ac power failure, dc output under/ over voltage, dc no charge, and input/output breaker open.	None; Battery can provide power for 24 and 72 hours without charger; other divisions available. Spare battery charger available for connection.	Failure of only one div. chgr. falls into single failure criteria and the other three div. are still available.
			C	No input	Same as above.	None; Battery can provide power for 24 and 72 hours without charger.	This component inoperable during blackout.
2.	Battery Division A, IDSA DB 1A,1B Division B, IDSB DB 1A,1B,2A,2B Division C, IDSC DB 1A,1B,2A,2B Division D, IDSD DB 1A,1B	Backup to battery charger during load cycling (in-rush current) and provide dc power for 24 and 72 hours without battery charger.	A,B	No output or low voltage	Battery monitor provides annunciation in main control room; switchboard failure alarm in main control room for ground detection and bus undervoltage.	None; Battery chargers (item 1) available; other divisions available. Spare battery available for connection.	Power still available with a single ground. Loss of entire battery function is single failure and the other divisions are available.
			C	No output or low voltage	Same as above.	None; Other divisions available; spare battery available.	
3.	Fused transfer switch box Division A, IDSA DF 1 Division B, IDSB DF 1,2 Division C, IDSC DF 1,2 Division D, IDSD DF 1	Provide circuit continuity and protection between Item 2 battery and Item 4 switchboard.	A,B,C	Inadvertent opening (blown fuse)	Switchboard failure alarm in main control room for ground detection and bus undervoltage.	None; Other divisions available.	

Table 8.3.2-7 (Sheet 2 of 4)
Class 1E 250V DC and Class 1E Uninterruptible Power Supplies
Failure Modes and Effects Analysis

Item No.	Description of Components	Safety Function	Plant Operating Mode	Failure Mode(s)	Method of Failure Detection	Failure Effect on System Safety Function Capability	General Remarks
4.	250V DC Switchboard Division A, IDSA DS 1 Division B, IDSB DS 1,2 Division C, IDSC DS 1,2 Division D, IDSD DS 1	Distribute power via fusible disconnects to loads from chargers and battery.	A,B,C	Bus ground fault	Switchboard failure alarm in main control room for ground detection and bus undervoltage.	None; Other divisions available.	
5.	Fusible disconnect Division A, for Charger 1 Division B, for Charger 1,2 Division C, for Charger 1,2 Division D, for Charger 1	Provide circuit continuity and protection between Item 1 and 4.	A,B	Inadvertent opening (blown fuse)	Alarm in main control room for charger failure (dc no charge).	None; Battery can provide power for 24 and 72 hours without chargers. Other divisions available.	
			C	Inadvertent opening (blown fuse)	Same as above.	None; Battery can provide power for 24 and 72 hours without chargers.	
6.	Fusible disconnect Division A, for Inverter 1 Division B, for Inverter 1,2 Division C, for Inverter 1,2 Division D, for Inverter 1	Provide circuit continuity and protection between Item 4 switchboard and Item 9 inverters.	A,B,C	Inadvertent opening (blown fuse)	Inverter trouble alarm in main control room for loss of dc input, loss of ac output, input, output and backup power supply breaker open.	None; System safety function can be met with loss of one division.	
7.	Fusible disconnect for DC MCC Division A Division B Division C Division D	Provide circuit continuity and protection between Item 4 switchboard and Item 13 DC MCC.	A,B,C	Inadvertent opening (blown fuse)	DC MCC trouble alarm in main control room for bus undervoltage.	None; Other divisions available.	

Table 8.3.2-7 (Sheet 3 of 4)
Class 1E 250V DC and Class 1E Uninterruptible Power Supplies
Failure Modes and Effects Analysis

Item No.	Description of Components	Safety Function	Plant Operating Mode	Failure Mode(s)	Method of Failure Detection	Failure Effect on System Safety Function Capability	General Remarks
8.	Fusible disconnect for DC dist panel Division A Division B Division C Division D	Provide circuit continuity and protection between Item 4 switchboard and Item 14 dc panel.	A,B,C	Inadvertent opening (blown fuse)	DC dist. panel trouble alarm in main control room for bus undervoltage.	None; Other divisions available.	
9.	Inverter Division A, IDSA DU 1 Division B, IDSB DU 1,2 Division C, IDSC DU 1,2 Division D, IDSD DU 1	Convert 250V DC to 208Y/120V AC and provide 120V AC power.	A,B,C	No output	Alarm in main control room for common UPS trouble, for loss of dc input, loss of ac output; input, output and backup power supply breakers open.	None; System safety function can be met with loss of one division.	
10.	Voltage regulating transformer Division A, IDSA DT 1 Division B, IDSB DT 1 Division C, IDSC DT 1 Division D, IDSD DT 1	Backup to inverter (Item 9) when it is bypassed for maintenance or malfunction (local manual switching at inverter).	A,B	No output	Alarm in main control room for input and output power supply breakers open. And bus undervoltage.	None; Other divisions available.	For single failure analysis: These components are redundant to Item 1. These components are redundant to Item 9.
			C	No input	Bus undervoltage.	None	This component cannot function during blackout.
11.	208Y/120V AC distr. panel Division A, IDSA EA 1 Division B, IDSB EA 1,3 Division C, IDSC EA 1,3 Division D, IDSD EA 1	Distribute power via breakers to loads	A,B,C	Ground and bus fault	Alarm in main control room for undervoltage.	None; System safety function can be met with loss of one division.	

Table 8.3.2-7 (Sheet 4 of 4)
Class 1E 250V DC and Class 1E Uninterruptible Power Supplies
Failure Modes and Effects Analysis

Item No.	Description of Components	Safety Function	Plant Operating Mode	Failure Mode(s)	Method of Failure Detection	Failure Effect on System Safety Function Capability	General Remarks
12.	208Y/120V AC Distr. Panel Div. A, IDSA EA 2 Div. B, IDSB EA 2 Div. C, IDSC EA 2 Div. D, IDSD EA 2	Backup to invertor (Item 9) when it is bypassed for maintenance or malfunction (local manual switching at inverter).	A,B	Ground and bus fault	Alarm in main control room for bus undervoltage.	None; Other divisions available.	
			C	No input	Bus under voltage.	None	This component cannot function during blackout.
13.	DC MCC DIV. A, IDSA DK 1 DIV. B, IDSB DK 1 DIV. C, IDSC DK 1 DIV. D, IDSD DK 1	Distribute power via fusible disconnect to loads.	A,B,C	Ground and bus fault	MCC trouble alarm per MCC in main control room for bus undervoltage and ground detection.	None; Other divisions available.	Power still available with a single ground.
14.	DC Distr. Panel Div. A, IDSA DD1 Div. B, IDSB DD1 Div. C, IDSC DD1 Div. D, IDSD DD1	Distribute power via fusible disconnect to loads.	A,B,C	Ground and bus fault	Panel trouble alarm per panel in main control room for bus undervoltage and ground detection.	None; Other divisions available.	Power still available with a single ground.

- Plant operating modes are represented as follows:

  A – Normal or preferred power available.
  B – Loss of normal power and loss of preferred power and onsite standby diesel generator available.
  C – Blackout (loss of all ac systems, except 208Y/120-V AC UPS system).

  System success criteria are as follows:

  250-V DC System – Three out of four (Division A, B, C or D) divisions required.
  208Y/120-V AC UPS System – Three out of four divisions required.

- The failure of any one fusible disconnect or opening of one circuit breaker under a fault condition results in only the loss of the associated division. The other redundant divisions still remain available.

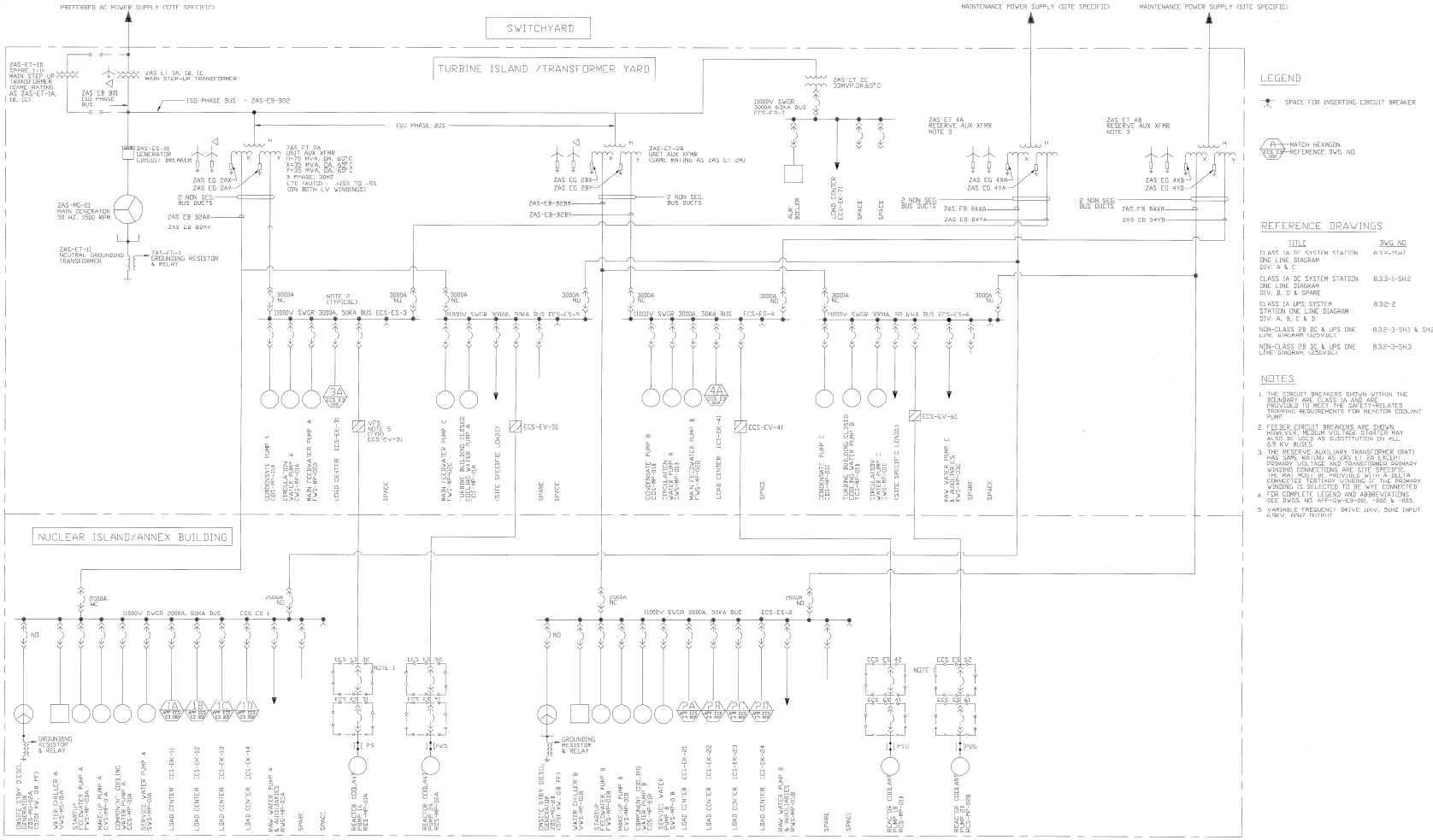

Figure 8.3.1-1
AC Power Station One Line Diagram

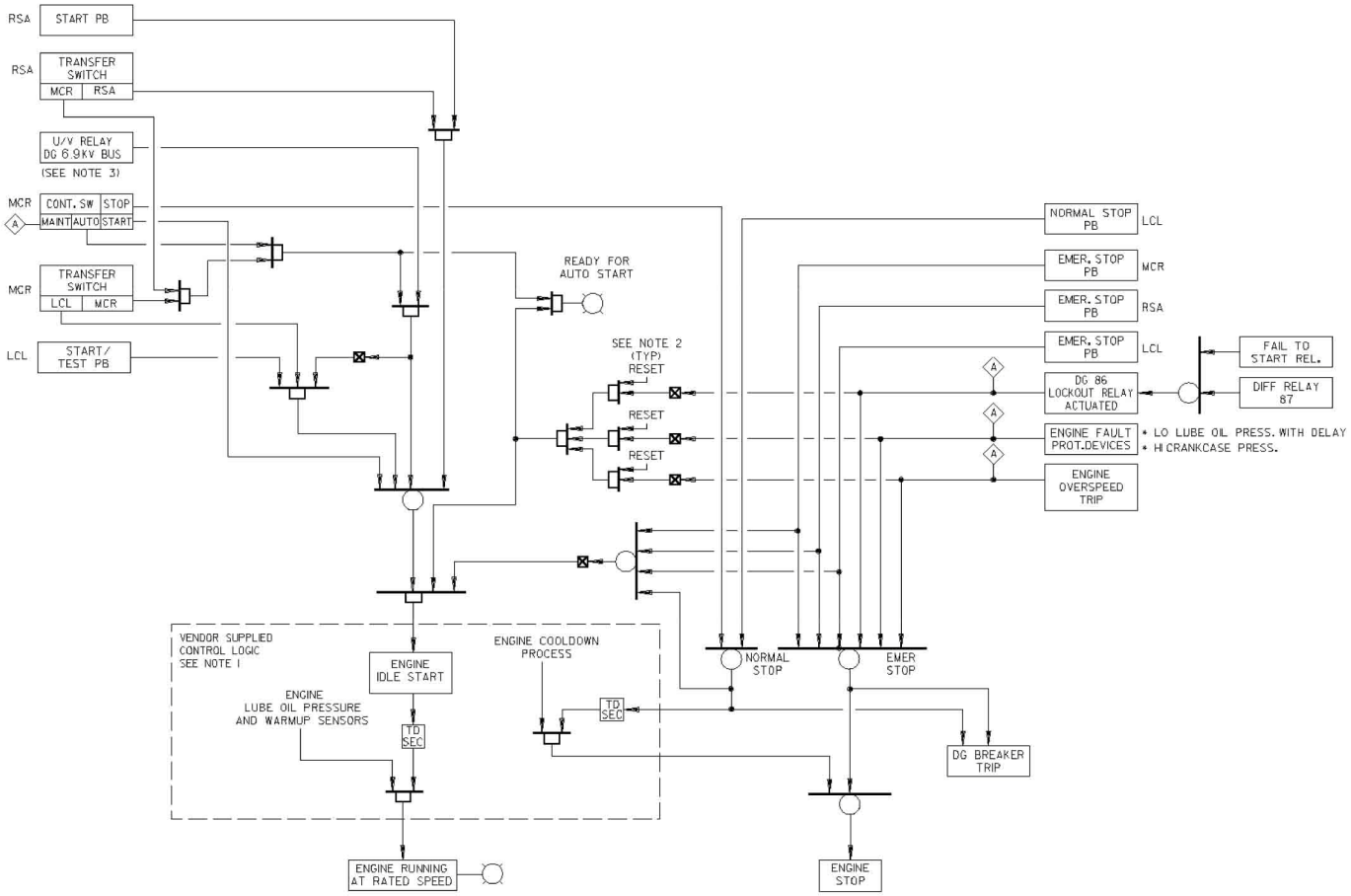

Figure 8.3.1-2
Onsite Standby Diesel Generator Initiating Circuit Logic Diagram

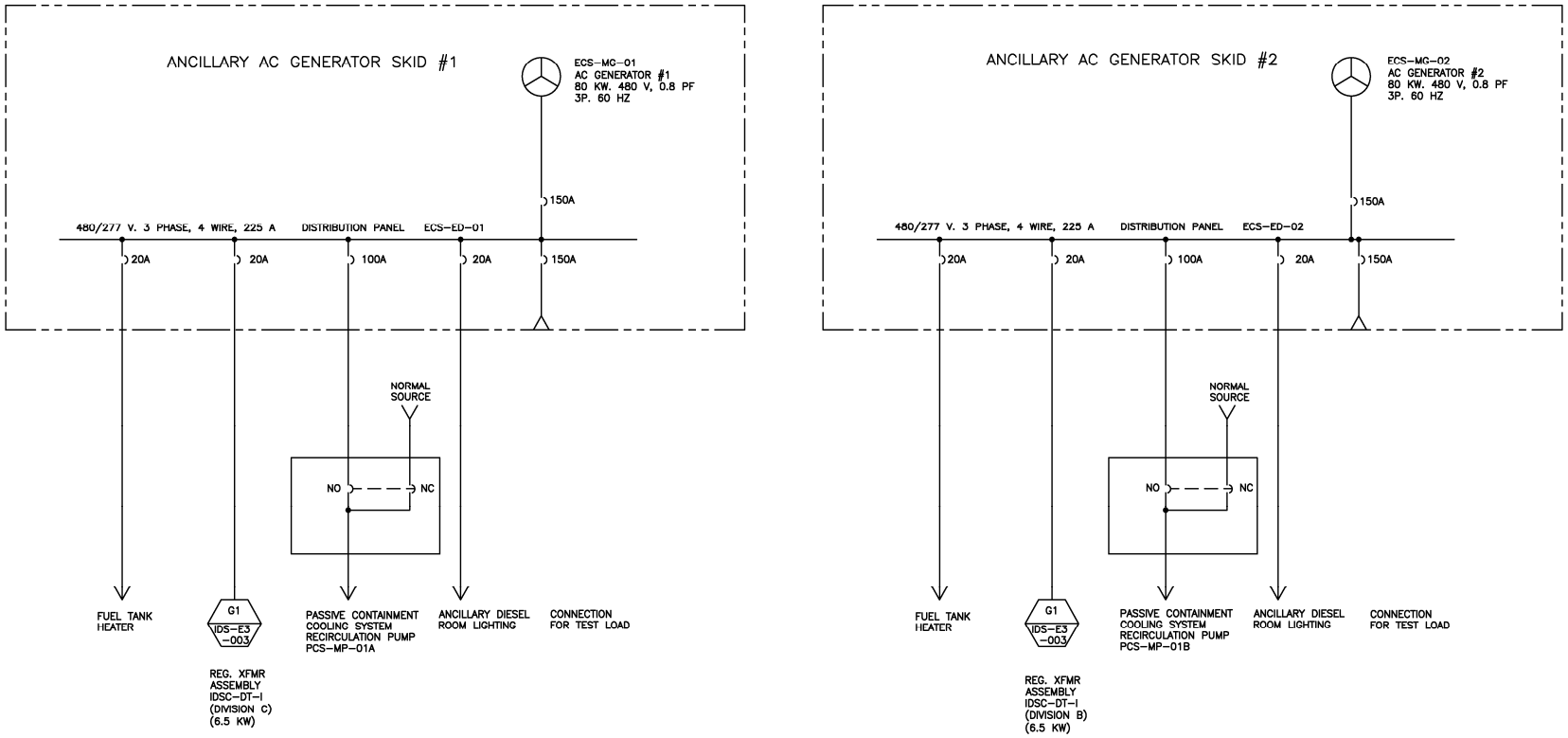

Figure 8.3.1-3
Post-72-Hour Temporary Electric Power One Line Diagram

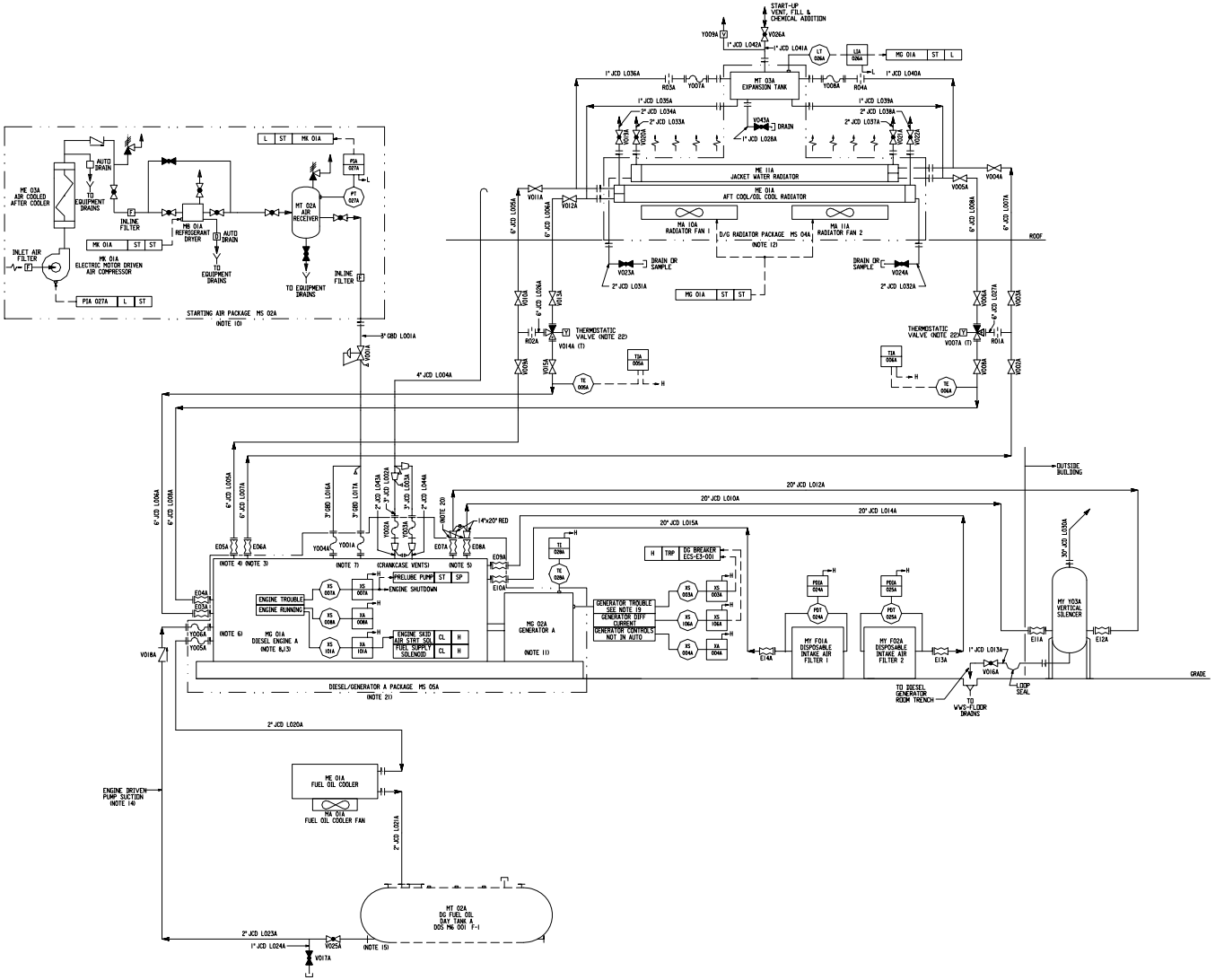

NOTES

1. THIS DESIGN TYPICAL AND FUNCTIONAL FOR ANY OFFERED DIESEL GENERATOR MANUFACTURER.
2. THE SYSTEM LOCATOR CODE ZOS HAS BEEN OMITTED FROM ALL COMPONENT NUMBERS, EXCEPT FOR EQUIPMENT. THE COMPONENT TYPE CODE HAS ALSO BEEN OMITTED.
3. DIESEL ENGINE JACKET WATER COOLING CIRCUIT INCLUDES ENGINE DRIVEN JACKET WATER PUMP MP 05A AND SEPARATE KEEP WARM CIRCUIT WITH ELECTRIC MOTOR DRIVEN JACKET WATER HEATER PUMP MP 06A AND ELECTRIC JACKET WATER HEATER EH 01A.
4. DIESEL ENGINE AFTER COOLER/OIL COOLER CIRCUIT INCLUDES ENGINE DRIVEN AC/DC WATER PUMP MP 07A AND TURBO CHARGERS AFTER COOLER ME 02A AND LUBE OIL COOLERS ME 04A & ME 05A.
5. DIESEL ENGINE EXHAUST GAS DRIVEN TURBO CHARGERS MG 05A AND MG 06A COMPRESS COMBUSTION AIR TO THE DIESEL ENGINE.
6. DIESEL ENGINE FUEL OIL SYSTEM INCLUDES ENGINE DRIVEN FUEL OIL PUMP MP 04A.
7. DIESEL ENGINE STARTING AIR SYSTEM INCLUDES STARTING AIR MOTORS MG 03A AND MG 04A.
8. DIESEL ENGINE LUBE OIL SYSTEM INCLUDES ENGINE DRIVEN MAIN LUBE OIL PUMP MP 01A AND AC MOTOR PRELUBE OIL PUMP MP 02A,DC MOTOR PRELUBE PUMP MP 03A AND KEEP WARM LUBE OIL HEATER EH 02A.
9. EQUIPMENT VENDOR SHALL FURNISH ALL SMALL SPECIALITIES, VALVES ETC IN EITHER 1" OR 2" SIZE AS REQUIRED FOR SERVICE CONDITIONS.
10. STARTING AIR SYSTEM IS SKID MOUNTED PACKAGE.
11. GENERATOR IS EQUIPPED WITH A SPACE HEATER FOR FREEZE PROTECTION.
12. JACKET WATER AND AFT COOL/OIL COOL RADIATORS IS SKID MOUNTED PACKAGE. PACKAGE SHARES RADIATOR FANS 1 AND 2.
13. LOCAL AND REMOTE DIESEL GENERATOR ALARM AND ANNUNCIATION POINTS ARE AS RECOMMENDED BY VENDOR.
14. DIESEL FUEL LINE TO ENGINE IS ROUTED IN TRENCH.
15. FUEL OIL SUCTION CONNECTION FROM DAY TANK SIDE IS ABOVE POTENTIAL RESIDUE LEVEL.
16. ALL INSTRUMENTATION AND EQUIPMENT FOR SYSTEM PACKAGE IS FURNISHED BY DIESEL GENERATOR VENDOR.
17. SIGNAL INTERFACES ORIGINATING FROM THE DIESEL GENERATOR PACKAGES ARE IDENTIFIED IN SID ZOS8 EB 001.
18. TEST AND SAMPLE POINTS NOT SHOWN.
19. GENERATOR TROUBLE SIGNAL IS ACTIVATED ON OCCURANCE OF ANY OF THE FOLLOWING CONDITIONS. THE CONDITIONS ARE ALARMED THROUGH DCS
    1. LOSS OF GENERATOR FIELD (40)
    2. GENERATOR OVERCURRENT (51V)
    3. GENERATOR NEG SEQ OVERCURRENT (46)
    4. GENERATOR REV. PWR ACTUATION (32)
20. EQUIPMENT CONNECTION FLANGE ONLY.
21. DIESEL ENGINE AND GENERATOR ARE SKID MOUNTED AS A SINGLE MECHANICAL PACKAGE.
22. SELF-CONTAINED, SELF-POWERED, THREE-WAY THERMOSTATIC VALVE

Inside Diesel Generator Building
Figure 8.3.1-4 (Sheet 1 of 2)
Diesel Generator System
Piping and Instrumentation Diagram
(REF) ZOS 001

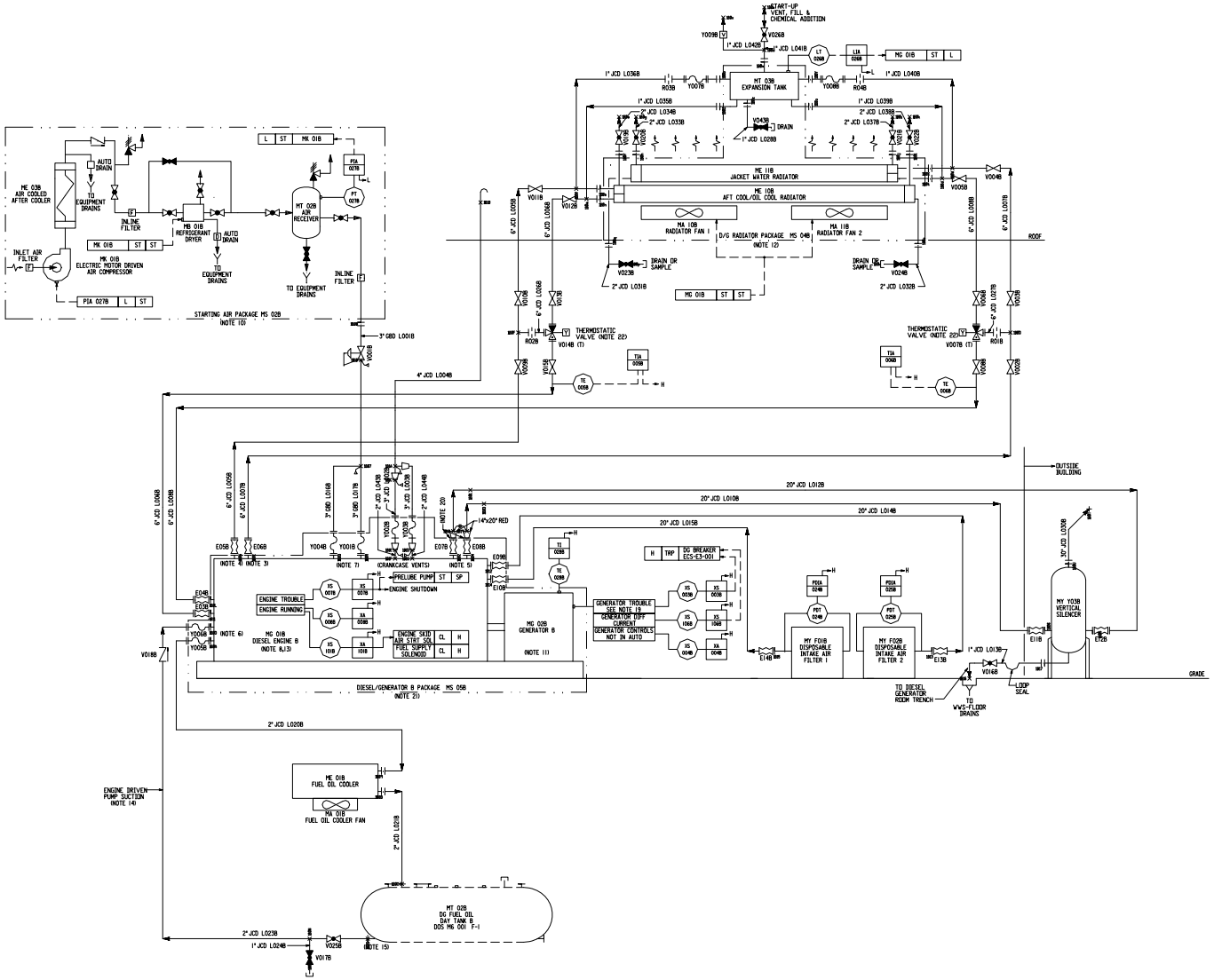

NOTES

1. THIS DESIGN TYPICAL AND FUNCTIONAL FOR ANY OFFERED DIESEL GENERATOR MANUFACTURER.
2. THE SYSTEM LOCATOR CODE ZOS HAS BEEN OMITTED FROM ALL COMPONENT NUMBERS, EXCEPT FOR EQUIPMENT, THE COMPONENT TYPE CODE HAS ALSO BEEN OMITTED.
3. DIESEL ENGINE JACKET WATER COOLING CIRCUIT INCLUDES ENGINE DRIVEN JACKET WATER PUMP MP 05B AND SEPARATE KEEP WARM CIRCUIT WITH ELECTRIC MOTOR DRIVEN JACKET WATER HEATER PUMP MP 06B AND ELECTRIC JACKET WATER HEATER EH 01B.
4. DIESEL ENGINE AFTER COOLER/OIL COOLER CIRCUIT INCLUDES ENGINE DRIVEN AC/DC WATER PUMP MP 01B AND TURBO CHARGERS AFTER COOLER ME 02B AND LUBE OIL COOLERS ME 04B & ME 05B.
5. DIESEL ENGINE EXHAUST GAS DRIVEN TURBO CHARGERS MG 05B AND MG 06B COMPRESS COMBUSTION AIR TO THE DIESEL ENGINE.
6. DIESEL ENGINE FUEL OIL SYSTEM INCLUDES ENGINE DRIVEN FUEL OIL PUMP MP 04B.
7. DIESEL ENGINE STARTING AIR SYSTEM INCLUDES STARTING AIR MOTORS MG 03B AND MG 04B.
8. DIESEL ENGINE LUBE OIL SYSTEM INCLUDES ENGINE DRIVEN MAIN LUBE OIL PUMP MP 01B AND AC MOTOR PRELUBE OIL PUMP MP 02B,DC MOTOR PRELUBE PUMP MP 03B AND KEEP WARM LUBE OIL HEATER EH 02B.
9. EQUIPMENT VENDOR SHALL FURNISH ALL SMALL SPECIALITIES, VALVES ETC IN EITHER 1" OR 2" SIZE AS REQUIRED FOR SERVICE CONDITIONS.
10. STARTING AIR SYSTEM IS SKID MOUNTED PACKAGE.
11. GENERATOR IS EQUIPPED WITH A SPACE HEATER FOR FREEZE PROTECTION.
12. JACKET WATER AND AFT COOL/OIL COOL RADIATORS IS SKID MOUNTED PACKAGE. PACKAGE SHARES RADIATOR FANS 1 AND 2.
13. LOCAL AND REMOTE DIESEL GENERATOR ALARM AND ANNUNCIATION POINTS ARE AS RECOMMENDED BY VENDOR.
14. DIESEL FUEL LINE TO ENGINE IS ROUTED IN TRENCH.
15. FUEL OIL SUCTION CONNECTION FROM DAY TANK SIDE IS ABOVE POTENTIAL RESIDUE LEVEL.
16. ALL INSTRUMENTATION AND EQUIPMENT FOR SYSTEM PACKAGE IS FURNISHED BY DIESEL GENERATOR VENDOR.
17. SIGNAL INTERFACES ORIGINATING FROM THE DIESEL GENERATOR PACKAGES ARE IDENTIFIED IN SSD "ZOS E8 001.
18. TEST AND SAMPLE POINTS NOT SHOWN.
19. GENERATOR TROUBLE SIGNAL IS ACTIVATED ON OCCURANCE OF ANY OF THE FOLLOWING CONDITIONS. THE CONDITIONS ARE ALARMED THROUGH BCS.
    1. LOSS OF GENERATOR FIELD (40)
    2. GENERATOR OVERCURRENT (51V)
    3. GENERATOR NEG. SEQ. OVERCURRENT (46)
    4. GENERATOR REV. PWR ACTUATION (32)
20. EQUIPMENT CONNECTION FLANGE ONLY.
21. DIESEL ENGINE AND GENERATOR ARE SKID MOUNTED AS A SINGLE MECHANICAL PACKAGE.
22. SELF-CONTAINED, SELF-POWERED, THREE-WAY THERMOSTATIC VALVE

Inside Diesel Generator Building
Figure 8.3.1-4 (Sheet 2 of 2)
Diesel Generator System
Piping and Instrumentation Diagram
(REF) ZOS 002

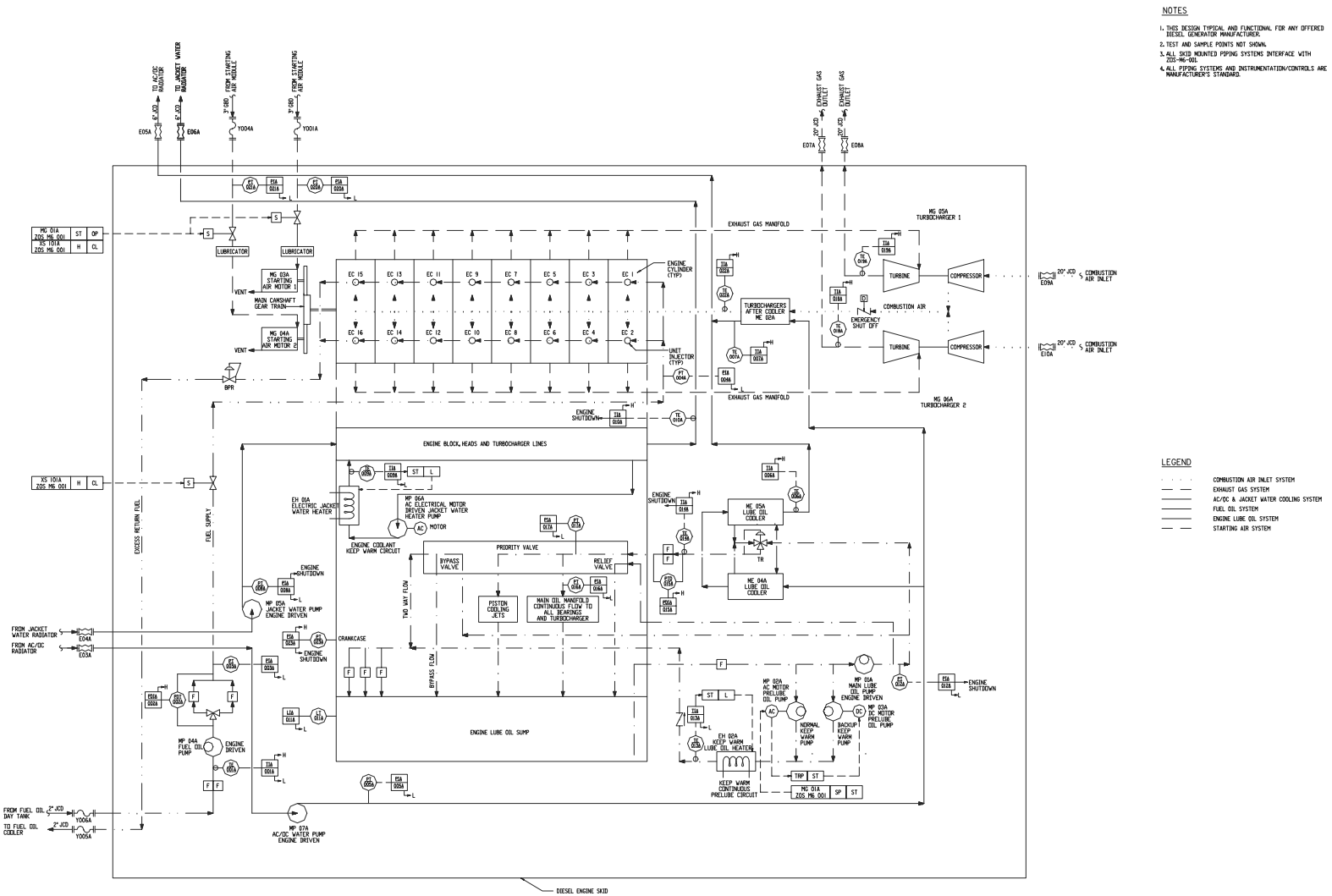

Inside Diesel Generator Building

Figure 8.3.1-5 (Sheet 1 of 2)

Diesel Engine Skid Mounted System

(REF) ZOS K001

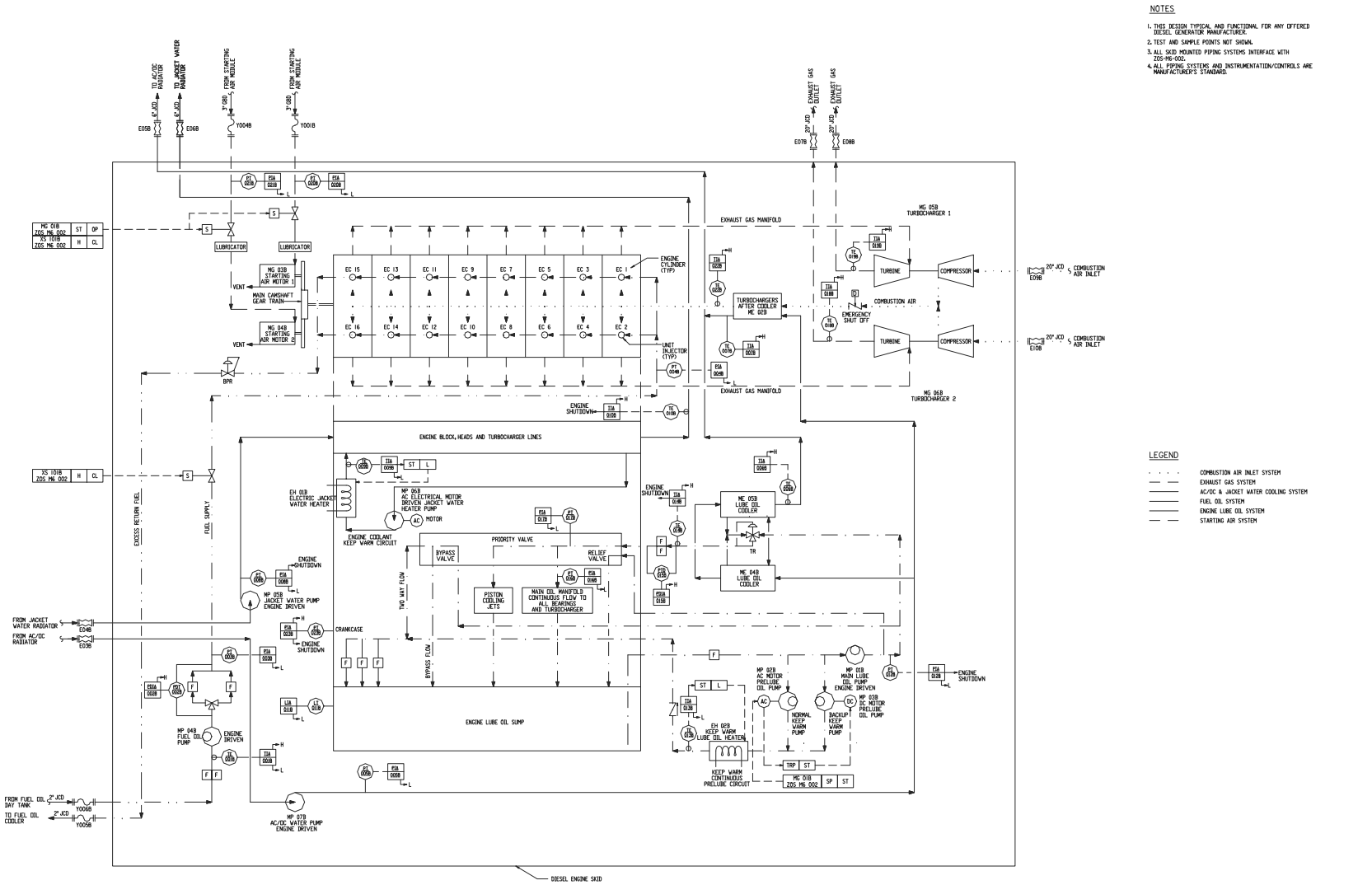

Inside Diesel Generator Building

Figure 8.3.1-5 (Sheet 2 of 2)

Diesel Engine Skid Mounted System

(REF) ZOS K002

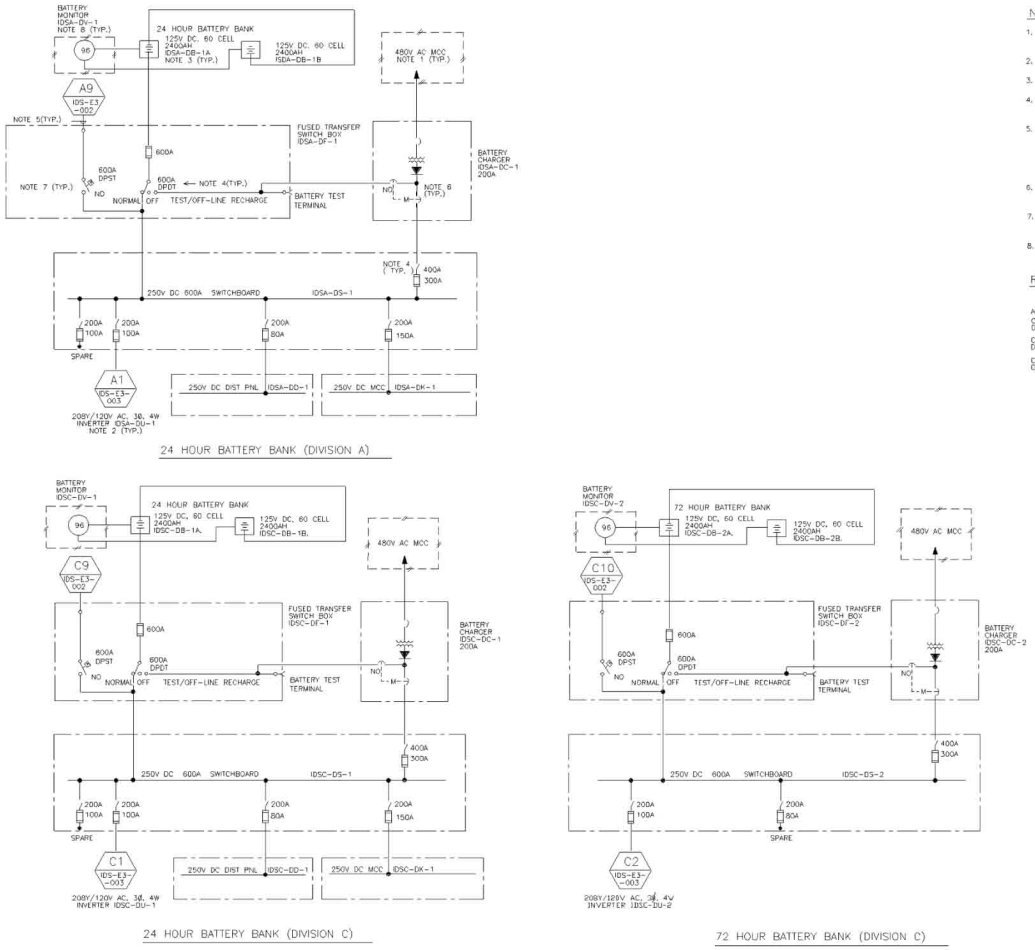

NOTES

1. 480V AC INPUT POWER TO BATTERY CHARGERS IS PROVIDED FROM ONSITE STANDBY DIESEL GENERATOR BACKED MCC.
2. SEE DWG. NO. IDS-E3-003 FOR UPS CONFIGURATION.
3. BATTERY AMPERE-HOUR RATING IS BASED ON 8 HOURS DISCHARGE RATE.
4. ALL FUSIBLE DISCONNECT SWITCHES ARE RATED FOR 50 KA SHORT CIRCUIT RATING. THE 1200A SWITCH RATING IS CAPABLE OF CARRYING 2400A FOR UP TO 2 HOURS.
5. SPARE CLASS 1E BATTERY BANK WITH SPARE CLASS 1E BATTERY CHARGER IS UTILIZED FOR CLASS 1E DC SYSTEM AS A TEMPORARY REPLACEMENT FOR ANY 24 HR OR 72 HR BATTERY BANK ONE AT A TIME. SPARE CLASS 1E BATTERY BANK (WITHOUT SPARE CLASS 1E BATTERY CHARGER) CAN BE USED AS A TEMPORARY POWER SOURCE FOR NON-CLASS 1E DC SYSTEM.
6. MECHANICAL INTERLOCKED IS PROVIDED TO PREMIT CLOSING ONLY ONE CIRCUIT BREAKER AT A TIME.
7. KIRK-KEY INTERLOCK SWITCH IS PROVIDED TO PREVENT TRANSFER OPERATION OF MORE THAN ONE SWITCHBOARD AT A TIME.
8. FOR LEGEND AND ABBREVIATION, SEE DWGS OW-E9-001, -002 AND -003.

REFERENCE DRAWINGS

TITLE	DWG. NO.
AC POWER SYSTEM – STATION ONE LINE DIAGRAMS	ECS-E3-001 & 2
CLASS 1E DC SYSTEM – STATION ONE LINE DIAGRAM DIV. B, D & SPARE	IDS-E3-002
CLASS 1E UPS SYSTEM– STATION ONE LINE DIAGRAM DIV A,B,C & D	IDS-E3-003
CLASS 1E DC SYSTEM ONE LINE METER & RELAY DIAGRAMS	IDS-E3-004 THRU 010

Figure 8.3.2-1 (Sheet 1 of 2)
Class 1E DC System One Line Diagram

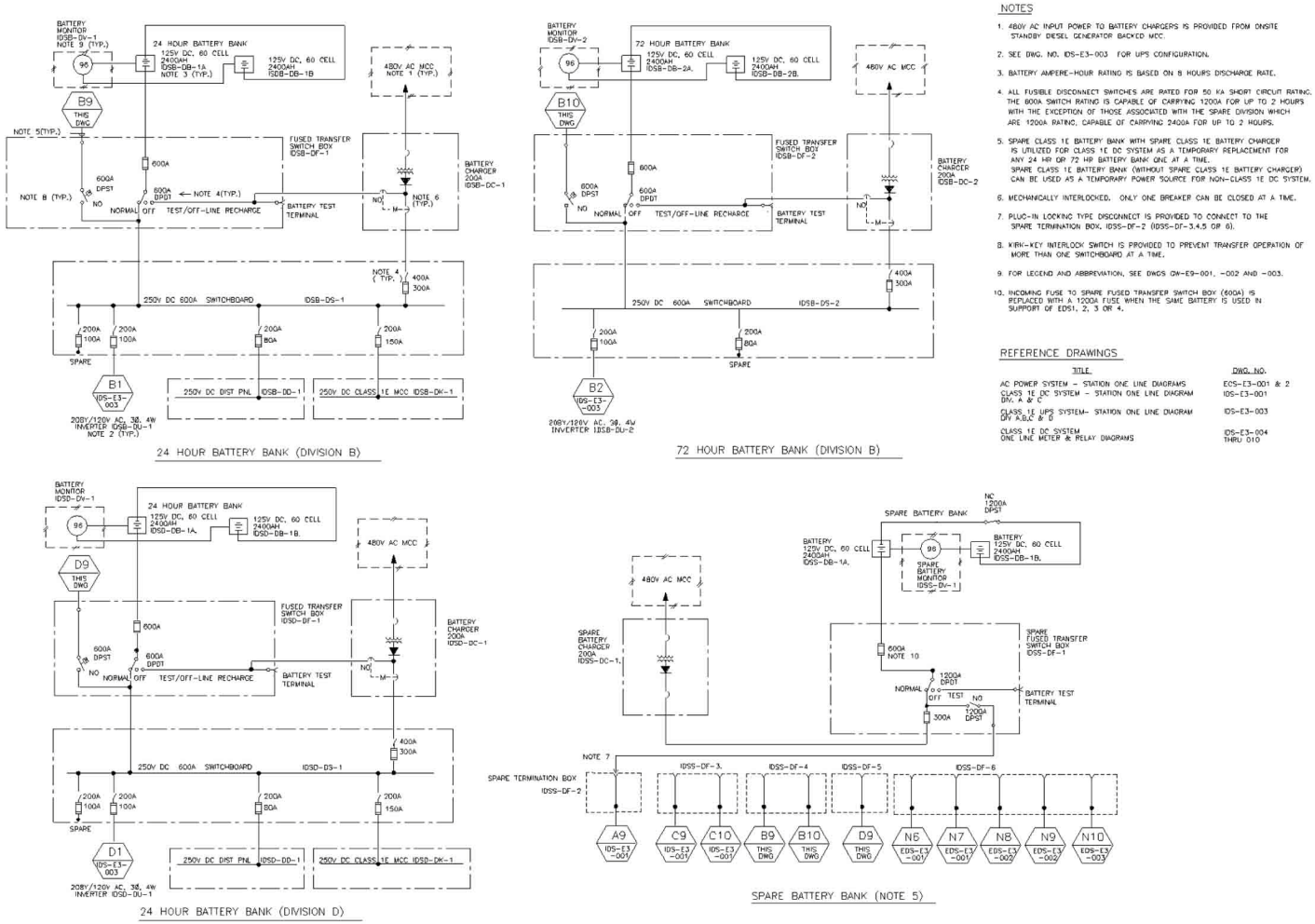

Figure 8.3.2-1 (Sheet 2 of 2)
Class 1E DC System One Line Diagram

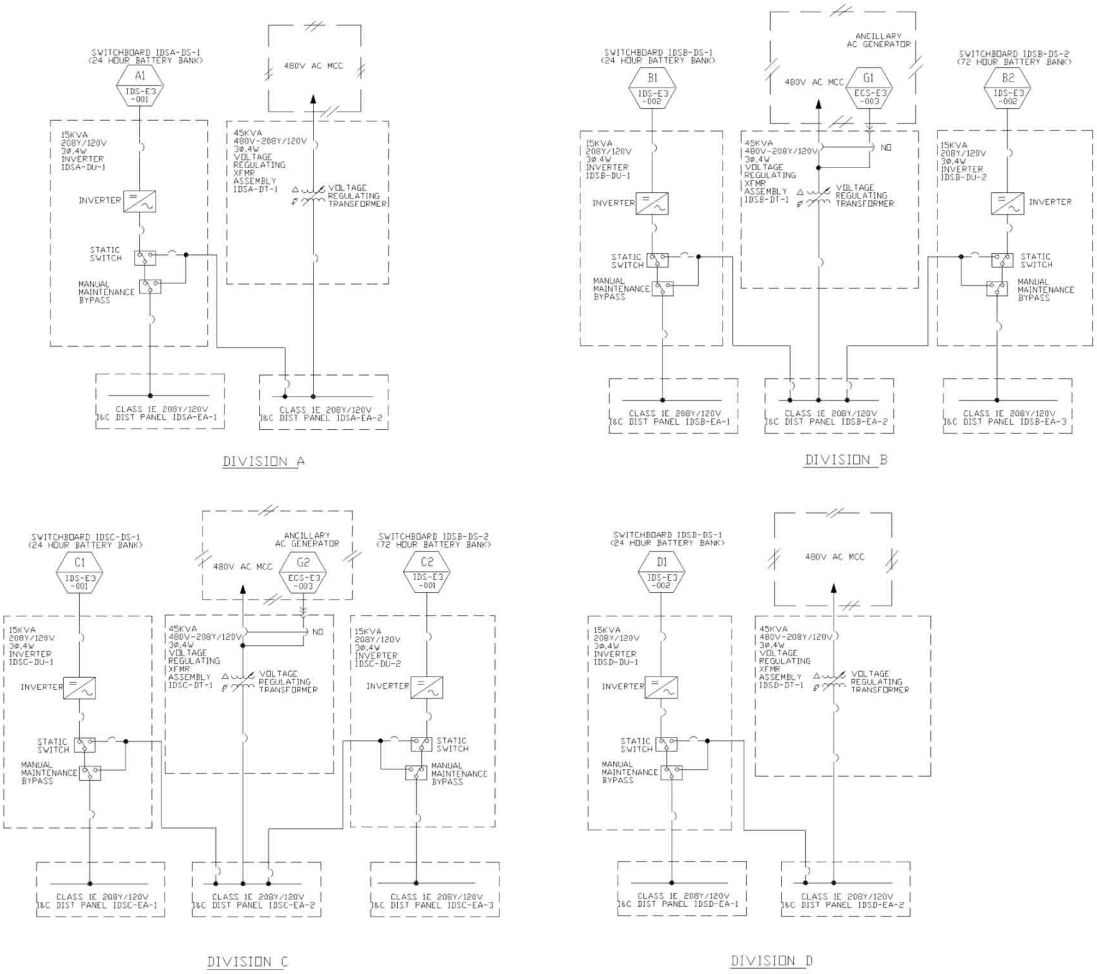

Figure 8.3.2-2
Class 1E 208y/120V UPS One Line Diagram

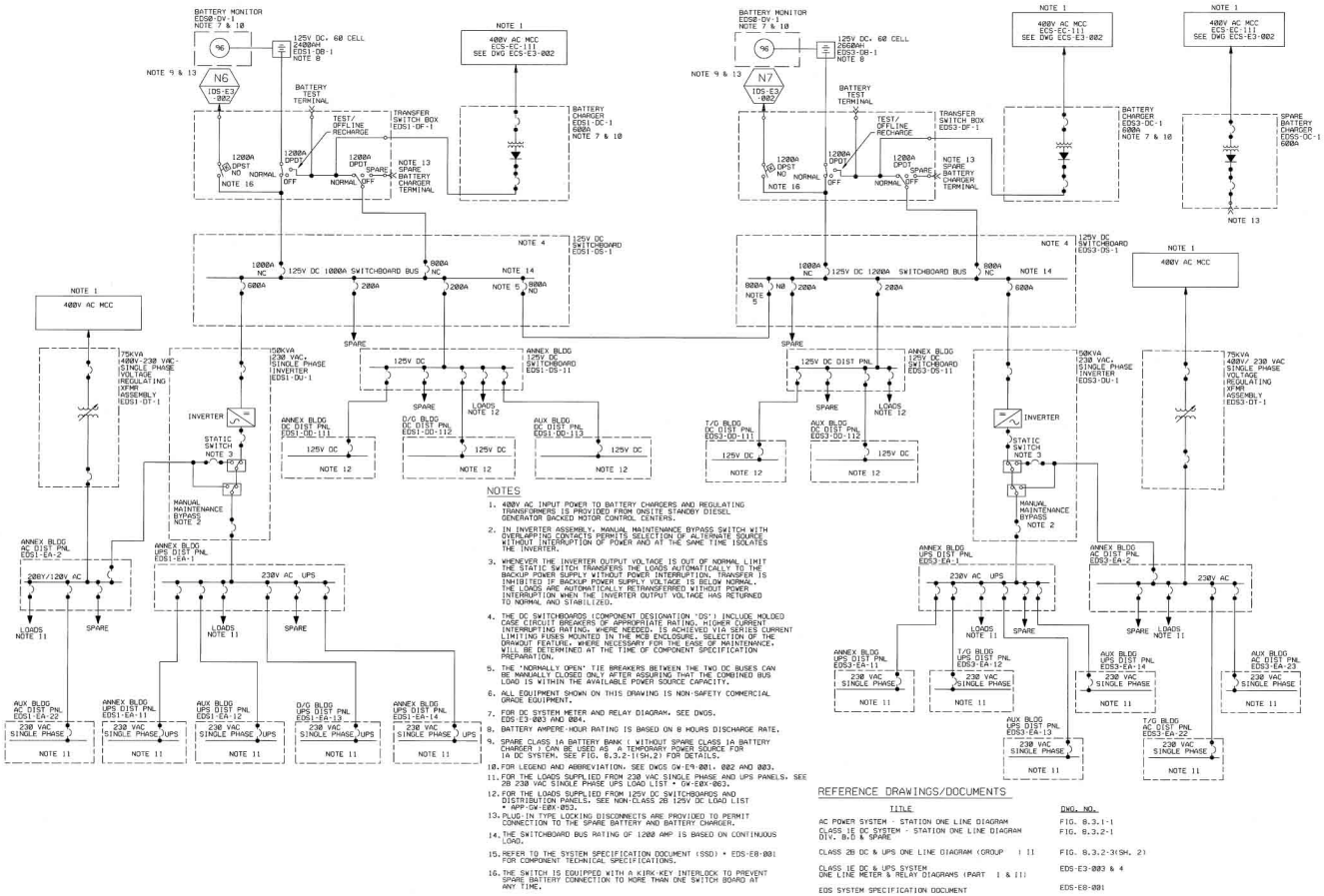

Figure 8.3.2-3 (Sheet 1 of 3)
Non-Class 1E DC & UPS System One Line Diagram

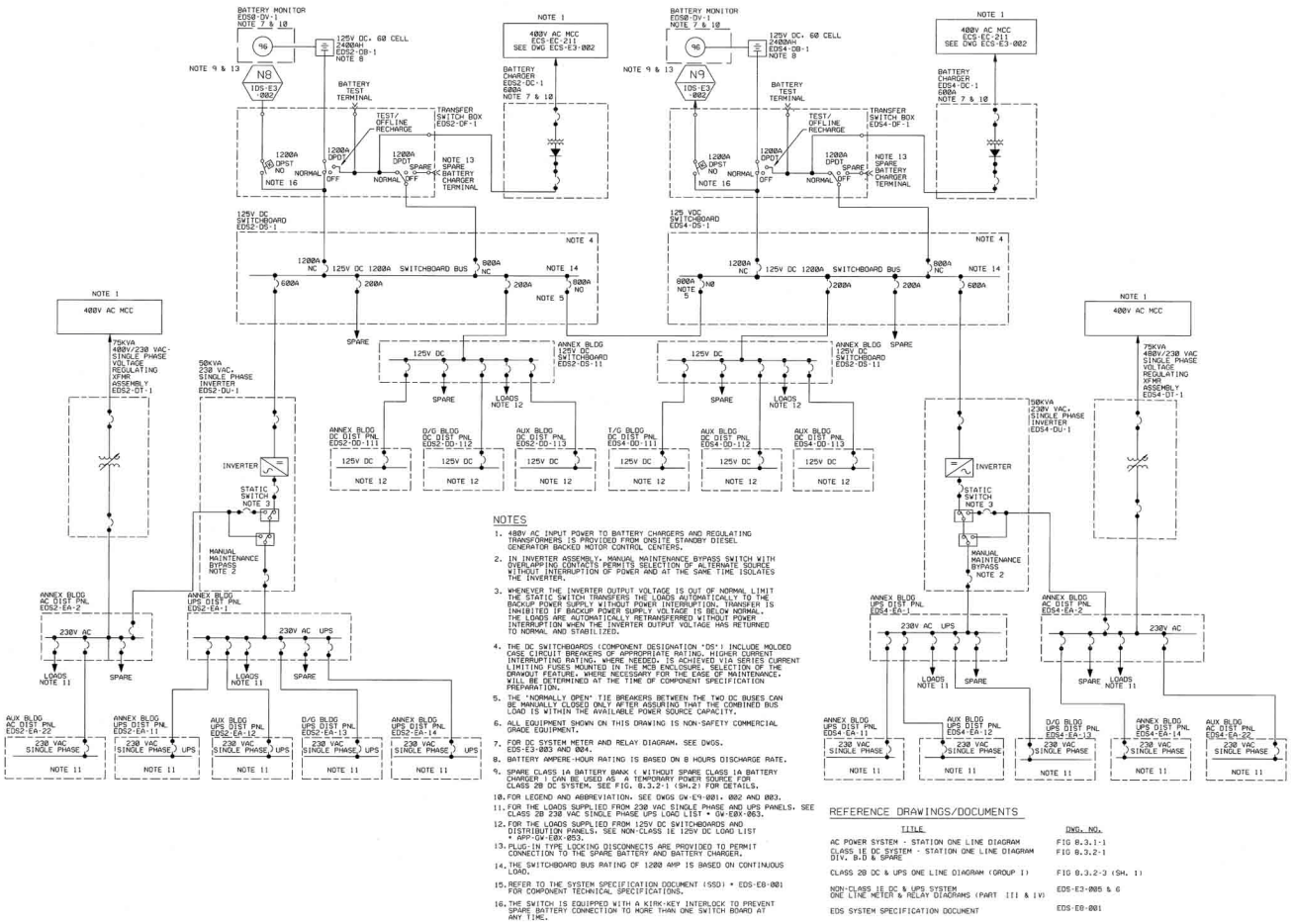

Figure 8.3.2-3 (Sheet 2 of 3)
Non-Class 1E DC & UPS System One Line Diagram

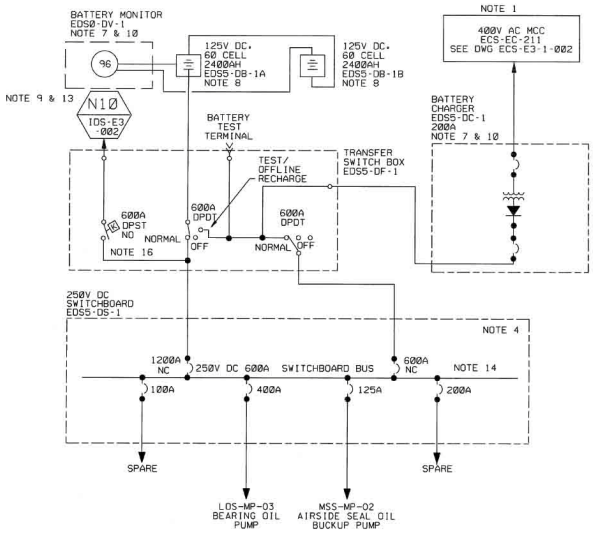

NOTES

1. 400V AC INPUT POWER TO BATTERY CHARGERS IS PROVIDED FROM ONSITE STANDBY DIESEL GENERATOR BACKED MOTOR CONTROL CENTERS.
2. NOT USED
3. NOT USED
4. THE DC SWITCHBOARDS (COMPONENT DESIGNATION "DS") INCLUDE MOLDED CASE CIRCUIT BREAKERS OF APPROPRIATE RATING. HIGHER CURRENT INTERRUPTING RATING, WHERE NEEDED, IS ACHIEVED VIA SERIES CURRENT LIMITING FUSES MOUNTED IN THE MCB ENCLOSURE. SELECTION OF THE DRAWOUT FEATURE, WHERE NECESSARY FOR THE EASE OF MAINTENANCE, WILL BE DETERMINED AT THE TIME OF COMPONENT SPECIFICATION PREPARATION.
5. NOT USED
6. ALL EQUIPMENT SHOWN ON THIS DRAWING IS NNS COMMERCIAL GRADE EQUIPMENT.
7. FOR CLASS 2B DC SYSTEM METER AND RELAY DIAGRAM, SEE DWGS. EDS-E3-003 AND 004.
8. BATTERY AMPERE-HOUR RATING IS BASED ON 8 HOURS DISCHARGE RATE.
9. SPARE CLASS 1A BATTERY BANK (WITHOUT SPARE CLASS 1A BATTERY CHARGER) CAN BE USED AS A TEMPORARY POWER SOURCE FOR CLASS 2B DC SYSTEM. SEE DRAWINGS APP-IDS-E3-002 FOR DETAILS.
10. FOR LEGEND AND ABBREVIATION, SEE DWGS GW-E9-001, 002 AND 003.
11. NOT USED
12. NOT USED
13. PLUG-IN TYPE LOCKING DISCONNECTS ARE PROVIDED TO PERMIT CONNECTION TO THE SPARE BATTERY.
14. THE SWITCHBOARD BUS RATING OF 600 AMP IS BASED ON CONTINUOUS LOAD.
15. REFER TO THE SYSTEM SPECIFICATION DOCUMENT (SSD) * APP-EDS-E8-001 FOR COMPONENT TECHNICAL SPECIFICATIONS.
16. THE SWITCH IS EQUIPPED WITH A KIRK-KEY INTERLOCK TO PREVENT SPARE BATTERY CONNECTION TO MORE THAN ONE SWITCH BOARD AT ANY TIME.

REFERENCE DRAWINGS/DOCUMENTS

TITLE	DWG. NO.
AC POWER SYSTEM - STATION ONE LINE DIAGRAM	FIG. 8.3.1-1
CLASS 1E DC SYSTEM - STATION ONE LINE DIAGRAM DIV. B.D & SPARE	FIG. 8.3.2-1 (SH. 2)
CLASS 2B DC & UPS ONE LINE DIAGRAM (GROUP I)	FIG. 8.3.2-3 (SH. 2)
CLASS 2B DC & UPS SYSTEM ONE LINE METER & RELAY DIAGRAMS (PART I & II)	EDS-E3-003 & 4
EDS SYSTEM SPECIFICATION DOCUMENT	EDS-E8-001

Figure 8.3.2-3 (Sheet 3 of 3)
Non-Class 1E DC & UPS System One Line Diagram