IFSAR Table of Contents

Chapter 1 — Introduction and General Description of the Plant

Chapter 2 — Site Characteristics

Chapter 3 — Design of Structures, Components, Equipment and Systems

Chapter 4 — Reactor

Chapter 5 — Reactor Coolant System and Connected Systems

Chapter 6 — Engineered Safety Features

Chapter 7 — Instrumentation and Controls

Chapter 8 — Electric Power

Chapter 9 — Auxiliary Systems

Chapter 10 — Steam and Power Conversion

Chapter 11 — Radioactive Waste Management

Chapter 12 — Radiation Protection

Chapter 13 — Conduct of Operation

Chapter 14 — Initial Test Program

Chapter 15 — Accident Analyses

Chapter 16 — Technical Specifications

Chapter 17 — Quality Assurance

Chapter 18 — Human Factors Engineering

Chapter 19 — Probabilistic Risk Assessment

IFSAR Formatting Legend

Color	Description
	Original Westinghouse AP1000 DCD Revision 19 content (part of plant-specific DCD)
	Departures from AP1000 DCD Revision 19 content (part of plant-specific DCD)
	Standard FSAR content
	Site-specific FSAR content
	Linked cross-references (chapters, appendices, sections, subsections, tables, figures, and references)

TABLE OF CONTENTS

Section	Title	Page
CHAPTER 6	ENGINEERED SAFETY FEATURES	6.0-1
6.0	Engineered Safety Features	6.0-1
6.1	Engineered Safety Features Materials	6.1-1
6.1.1	Metallic Materials	6.1-1
6.1.1.1	Specifications for Principal Pressure-Retaining Materials	6.1-1
6.1.1.2	Fabrication Requirements	6.1-2
6.1.1.3	Specifications for Nonpressure-Retaining Materials	6.1-3
6.1.1.4	Material Compatibility with Reactor Coolant System Coolant and Engineered Safety Features Fluids	6.1-3
6.1.1.5	Integrity of Safety-Related Components	6.1-4
6.1.1.6	Thermal Insulation	6.1-4
6.1.1.7	Component and System Cleaning	6.1-4
6.1.2	Organic Materials	6.1-4
6.1.2.1	Protective Coatings	6.1-4
6.1.2.2	Other Organic Materials	6.1-10
6.1.3	Combined License Information Items	6.1-10
6.1.3.1	Procedure Review	6.1-10
6.1.3.2	Coating Program	6.1-10
6.1.4	References	6.1-10
6.2	Containment Systems	6.2-1
6.2.1	Containment Functional Design	6.2-1
6.2.1.1	Containment Structure	6.2-1
6.2.1.2	Containment Subcompartments	6.2-4
6.2.1.3	Mass and Energy Release Analyses for Postulated Pipe Ruptures	6.2-6
6.2.1.4	Mass and Energy Release Analysis for Postulated Secondary-System Pipe Rupture Inside Containment	6.2-10
6.2.1.5	Minimum Containment Pressure Analysis for Performance Capability Studies of Emergency Core Cooling System (PWR)	6.2-14
6.2.1.6	Testing and Inspection	6.2-15
6.2.1.7	Instrumentation Requirements	6.2-15
6.2.2	Passive Containment Cooling System	6.2-15
6.2.2.1	Safety Design Basis	6.2-16
6.2.2.2	System Design	6.2-16
6.2.2.3	Safety Evaluation	6.2-21
6.2.2.4	Testing and Inspection	6.2-22
6.2.2.5	Instrumentation Requirements	6.2-24
6.2.3	Containment Isolation System	6.2-24
6.2.3.1	Design Basis	6.2-24
6.2.3.2	System Description	6.2-28
6.2.3.3	Design Evaluation	6.2-29
6.2.3.4	Tests and Inspections	6.2-32
6.2.3.5	Instrumentation and Control Application	6.2-32
6.2.4	Containment Hydrogen Control System	6.2-34
6.2.4.1	Design Basis	6.2-34

TABLE OF CONTENTS (CONTINUED)

Section	Title	Page
	6.2.4.2 System Design	6.2-36
	6.2.4.3 Design Evaluation (Design Basis Accident)	6.2-38
	6.2.4.4 Design Evaluation (Severe Accident)	6.2-38
	6.2.4.5 Tests and Inspections	6.2-39
	6.2.4.6 Combined License Information	6.2-40
	6.2.5 Containment Leak Rate Test System	6.2-40
	6.2.5.1 Design Basis	6.2-40
	6.2.5.2 System Description	6.2-41
	6.2.5.3 Safety Evaluation	6.2-46
	6.2.5.4 Inservice Inspection/Inservice Testing	6.2-46
	6.2.6 Combined License Information for Containment Leak Rate Testing	6.2-46
	6.2.7 References	6.2-46
6.3	Passive Core Cooling System	6.3-1
	6.3.1 Design Basis	6.3-1
	6.3.1.1 Safety Design Basis	6.3-2
	6.3.1.2 Non-safety Design Basis	6.3-5
	6.3.1.3 Power Generation Design Basis	6.3-5
	6.3.2 System Design	6.3-6
	6.3.2.1 Schematic Piping and Instrumentation Diagrams	6.3-6
	6.3.2.2 Equipment and Component Descriptions	6.3-11
	6.3.2.3 Applicable Codes and Classifications	6.3-26
	6.3.2.4 Material Specifications and Compatibility	6.3-27
	6.3.2.5 System Reliability	6.3-27
	6.3.2.6 Protection Provisions	6.3-30
	6.3.2.7 Provisions for Performance Testing	6.3-30
	6.3.2.8 Manual Actions	6.3-30
	6.3.3 Performance Evaluation	6.3-31
	6.3.3.1 Increase in Heat Removal by the Secondary System	6.3-33
	6.3.3.2 Decrease in Heat Removal by the Secondary System	6.3-35
	6.3.3.3 Decrease in Reactor Coolant System Inventory	6.3-36
	6.3.3.4 Shutdown Events	6.3-39
	6.3.4 Post-72 Hour Actions	6.3-42
	6.3.5 Limits on System Parameters	6.3-43
	6.3.6 Inspection and Testing Requirements	6.3-43
	6.3.6.1 Preoperational Inspection and Testing	6.3-43
	6.3.6.2 In-Service Testing and Inspection	6.3-44
	6.3.6.3 Mitigation of Gas Accumulation	6.3-45
	6.3.7 Instrumentation Requirements	6.3-47
	6.3.7.1 Pressure Indication	6.3-47
	6.3.7.2 Temperature Indication	6.3-48
	6.3.7.3 Passive Residual Heat Removal Heat Exchanger Outlet Flow Indication	6.3-48
	6.3.7.4 Level Indication	6.3-49
	6.3.7.5 Containment Radiation Level	6.3-49
	6.3.7.6 Valve Position Indication and Control	6.3-49

TABLE OF CONTENTS (CONTINUED)

Section	Title	Page
	6.3.7.7 Automatic Depressurization System Actuation at 24 Hours	6.3-51
6.3.8	Combined License Information	6.3-51
	6.3.8.1 Containment Cleanliness Program	6.3-51
	6.3.8.2 Verification of Water Sources for Long-Term Recirculation Cooling Following a LOCA	6.3-52
6.3.9	References	6.3-52
6.4	Habitability Systems	6.4-1
6.4.1	Safety Design Basis	6.4-1
	6.4.1.1 Main Control Room Design Basis	6.4-1
	6.4.1.2 Instrumentation and Control Room/DC Equipment Rooms Design Basis	6.4-2
6.4.2	System Description	6.4-2
	6.4.2.1 Definition of the Main Control Room Pressure Boundary	6.4-2
	6.4.2.2 General Description	6.4-3
	6.4.2.3 Component Description	6.4-4
	6.4.2.4 Leaktightness	6.4-7
	6.4.2.5 Interaction with Other Zones and Pressurized Equipment	6.4-7
	6.4.2.6 Shielding Design	6.4-8
6.4.3	System Operation	6.4-8
	6.4.3.1 Normal Mode	6.4-8
	6.4.3.2 Emergency Mode	6.4-8
6.4.4	System Safety Evaluation	6.4-10
	6.4.4.1 Dual Unit Analysis	6.4-12
	6.4.4.2 Toxic Chemical Habitability Analysis	6.4-13
6.4.5	Inservice Inspection/Inservice Testing	6.4-14
	6.4.5.1 Preoperational Inspection and Testing	6.4-14
	6.4.5.2 Inservice Testing	6.4-14
	6.4.5.3 Air Quality Testing	6.4-15
	6.4.5.4 Main Control Room Envelope Habitability	6.4-15
6.4.6	Instrumentation Requirements	6.4-15
6.4.7	Combined License Information	6.4-16
6.4.8	References	6.4-16
6.5	Fission Product Removal and Control Systems	6.5-1
6.5.1	Engineered Safety Feature (ESF) Filter Systems	6.5-1
6.5.2	Containment Spray System	6.5-1
	6.5.2.1 System Description	6.5-1
	6.5.2.2 Design Evaluation	6.5-3
6.5.3	Fission Product Control Systems	6.5-5
	6.5.3.1 Primary Containment	6.5-5
	6.5.3.2 Secondary Containment	6.5-5
6.5.4	Combined License Information	6.5-5
6.5.5	References	6.5-5
6.6	Inservice Inspection of Class 2, 3, and MC Components	6.6-1
6.6.1	Components Subject to Examination	6.6-1
6.6.2	Accessibility	6.6-1

TABLE OF CONTENTS (CONTINUED)

Section	Title	Page
6.6.3	Examination Techniques and Procedures	6.6-2
6.6.3.1	Examination Methods	6.6-3
6.6.3.2	Qualification of Personnel and Examination Systems for Ultrasonic Examination	6.6-3
6.6.3.3	Relief Requests	6.6-3
6.6.4	Inspection Intervals	6.6-4
6.6.5	Examination Categories and Requirements	6.6-4
6.6.6	Evaluation of Examination Results	6.6-4
6.6.7	System Pressure Tests	6.6-5
6.6.8	Augmented Inservice Inspection to Protect against Postulated Piping Failures	6.6-5
6.6.9	Combined License Information Items	6.6-5
6.6.9.1	Inspection Programs	6.6-5
6.6.9.2	Construction Activities	6.6-5
APPENDIX 6A	FISSION PRODUCT DISTRIBUTION IN THE AP1000 POST-DESIGN BASIS ACCIDENT CONTAINMENT ATMOSPHERE	6A-1
6A.1	Design Basis Sequence Assumptions	6A-1
6A.1.1	Break Size and Fission Product Release Location in Containment	6A-1
6A.1.1.1	Releases From Depressurization System Lines	6A-2
6A.1.1.2	Releases From Coolant Loop Breaks	6A-2
6A.1.1.3	Direct Vessel Injection Line Breaks	6A-2
6A.1.1.4	Core Makeup Tank Balance Line Breaks	6A-3
6A.1.1.5	Chemical and Volume Control System Line Breaks	6A-3
6A.1.1.6	Fission Product Release Location Conclusion	6A-3
6A.2	Containment Natural Circulation and Mixing	6A-3
6A.3	Insights From the Passive Containment Cooling System Large Scale Test and AP1000 Stratification Studies	6A-6
6A.4	Conclusions	6A-7
6A.5	References	6A-7

LIST OF TABLES

Table Number	Title	Page
6.1-1	Engineered Safety Features Pressure-Retaining Materials	6.1-11
6.1-2	AP1000 Coated Surfaces, Containment Shell and Surfaces Inside Containment	6.1-12
6.2.1.1-1	Summary of Calculated Pressures and Temperatures	6.2-49
6.2.1.1-2	Initial Conditions	6.2-49
6.2.1.1-3	Results of Postulated Accidents	6.2-50
6.2.1.1-4–6.2.1.1-7	Not Used	6.2-51
6.2.1.1-8	Physical Properties of Passive Heat Sinks	6.2-52
6.2.1.1-9	Containment External Pressure Analysis Major Assumptions	6.2-53
6.2.1.1-10	Data for Additional Heat Sinks Credited in the Containment Peak Pressure Evaluation	6.2-54
6.2.1.2-1	Listing of Lines Not LBB Qualified and the Calculated Maximum Differential Pressures	6.2-55
6.2.1.3-1	Short-term Mass and Energy Inputs	6.2-58
6.2.1.3-2	Short-term 3-Inch Cold-Leg Break Mass and Energy Releases	6.2-59
6.2.1.3-3	Short-term 3-Inch Hot-Leg Break Mass and Energy Releases	6.2-60
6.2.1.3-4	Not Used	6.2-61
6.2.1.3-5	4" SG Blowdown Line Mass and Energy Releases	6.2-62
6.2.1.3-6	Pressurizer Spray Line Break Releases	6.2-63
6.2.1.3-7	Short-Term 3-Inch Single-Ended Cold-Leg Break Mass and Energy Releases	6.2-64
6.2.1.3-8	Basis for Long-Term Analysis	6.2-65
6.2.1.3-9	Long-Term DECL Break Mass and Energy Releases	6.2-66
6.2.1.3-10	Blowdown DEHL Break Mass and Energy Releases	6.2-77
6.2.1.4-1	Not Used	6.2-82
6.2.1.4-2	Mass and Enthalpy Release Data for the Case of Main Steam Line Full Double Ended Rupture from 30% Power Level with Faulted Loop Main Steam Line Isolation Valve Failure that Produces Highest Containment Pressure	6.2-83
6.2.1.4-3	Not Used	6.2-88
6.2.1.4-4	Plant Data Used for Mass and Energy Releases Determination	6.2-89
6.2.1.5-1	Minimum Containment Pressure Mass and Energy Releases	6.2-90
6.2.2-1	Passive Containment Cooling System Performance Parameters	6.2-93
6.2.2-2	Component Data Passive Containment Cooling System (Nominal)	6.2-94
6.2.2-3	Failure Mode and Effects Analysis - Passive Containment Cooling System Components	6.2-95
6.2.3-1	Containment Mechanical Penetrations and Isolation Valves	6.2-96
6.2.4-1	Component Data - Hydrogen Sensors (Nominal)	6.2-100
6.2.4-2	Component Data - Hydrogen Recombiner (Nominal)	6.2-101
6.2.4-3	Component Data - Hydrogen Igniter (Nominal)	6.2-102
6.2.4-4–6.2.4-5	Not Used	6.2-103
6.2.4-6	Igniter Location	6.2-104
6.2.4-7	Subcompartment/Area Igniter Coverage	6.2-107
6.3-1	Passive Core Cooling System - Remote Actuation Valves	6.3-53
6.3-2	Component Data - Passive Core Cooling System	6.3-54
6.3-3	Failure Mode and Effects Analysis - Passive Core Cooling System Components	6.3-56
6.4-1	Onsite Chemicals	6.4-17

LIST OF TABLES (CONTINUED)

Table Number	Title	Page
6.4-2	Main Control Room Habitability Indications and Alarms	6.4-18
6.4-3	Loss of AC Power Heat Load Limits	6.4-19
6.4-201	Main Control Room Habitability Evaluations of Onsite Toxic Chemicals	6.4-20
6.5.3-1	Primary Containment Operation Following a Design Basis Accident	6.5-7

LIST OF FIGURES

Figure Number	Title	Page
6.2.1.1-1	AP1000 Containment Response for Full DER MSLB – 30% Power	6.2-108
6.2.1.1-2	AP1000 Containment Response for Full DER MSLB – 101% Power	6.2-109
6.2.1.1-3–6.2.1.1-4	Not Used	6.2-110
6.2.1.1-5	AP1000 Containment Pressure Response for DECLG LOCA	6.2-111
6.2.1.1-6	AP1000 Containment Temperature Response to DECLG LOCA	6.2-112
6.2.1.1-7	AP1000 Containment Pressure Response for DECLG LOCA – 3 Days	6.2-113
6.2.1.1-8	AP1000 Containment Temperature Response for DECLG LOCA – 3 Days	6.2-114
6.2.1.1-9	AP1000 Containment Pressure Response – DEHLG LOCA	6.2-115
6.2.1.1-10	AP1000 Containment Response for DEHLG LOCA	6.2-116
6.2.1.1-11	AP1000 Design External Pressure Analysis Containment Pressure vs. Time	6.2-117
6.2.1.3-1	AP1000 DECLG Integrated Break Flow	6.2-118
6.2.1.3-2	AP1000 DECLG LOCA Integrated Energy Released	6.2-119
6.2.1.3-3	AP1000 DEHLG Integrated Break Flow	6.2-120
6.2.1.3-4	AP1000 DEHLG LOCA Integrated Energy Released	6.2-121
6.2.1.5-1	AP1000 Minimum Containment Pressure for DECLG LOCA	6.2-122
6.2.2-1	(Sheet 1 of 2) Passive Containment Cooling System Piping and Instrumentation Diagram (REF) PCS 001	6.2-123
6.2.2-1	(Sheet 2 of 2) Passive Containment Cooling System Piping and Instrumentation Diagram	6.2-124
6.2.2-2	Simplified Sketch of Passive Containment Cooling System	6.2-125
6.2.4-1–6.2.4-4	Not Used	6.2-126
6.2.4-5	Hydrogen Igniter Locations – Section View	6.2-127
6.2.4-6	Hydrogen Igniter Locations Plan View Elevation 82′-6″	6.2-128
6.2.4-7	Hydrogen Igniter Locations – Section View	6.2-129
6.2.4-8	Hydrogen Igniter Locations Plan View Elevation 96′-6″	6.2-130
6.2.4-9	Hydrogen Igniter Locations Plan View Elevation 118′-6″	6.2-131
6.2.4-10	Hydrogen Igniter Locations Plan View Elevation 135′-3″	6.2-132
6.2.4-11	Hydrogen Igniter Locations Plan View Elevation 162′-0″	6.2-133
6.2.4-12	Hydrogen Igniter Locations Plan View Elevation 210′-0″	6.2-134
6.2.4-13	Hydrogen Igniter Locations Section A-A	6.2-135
6.2.5-1	Containment Leak Rate Test System Piping and Instrumentation Diagram	6.2-136
6.3-1	Passive Core Cooling System Piping and Instrumentation Diagram (Sheet 1 of 3)	6.3-60
6.3-1	Passive Core Cooling System Piping and Instrumentation Diagram (Sheet 2 of 3)	6.3-61
6.3-1	Passive Core Cooling System Piping and Instrumentation Diagram (Sheet 3 of 3)	6.3-62
6.3-2	Not Used	6.3-63
6.3-3	Passive Safety Injection	6.3-64
6.3-4	Passive Decay Heat Removal	6.3-65
6.3-5	Passive Heat Removal Heat Exchanger	6.3-66
6.3-6	IRWST Screen Plan Location	6.3-67

LIST OF FIGURES (CONTINUED)

Figure Number	Title	Page
6.3-7	IRWST Screen Section Location	6.3-68
6.3-8	Containment Recirculation Screen Location Plan	6.3-69
6.3-9	Containment Recirculation Screen Location Elevation	6.3-70
6.4-1	Main Control Room Envelope	6.4-22
6.4-2	(Sheet 1 of 2) Main Control Room Habitability System Piping and Instrumentation Diagram	6.4-23
6.4-2	(Sheet 2 of 2) Main Control Room Habitability System Piping and Instrumentation Diagram	6.4-24
6.5-1	Containment Spray Coverage at Operating Deck	6.5-8
6A-1	RCS Release Locations	6A-9
6A-2	Containment Natural Circulation	6A-10

Chapter 6 Engineered Safety Features

6.0 Engineered Safety Features

Engineered safety features (ESF) protect the public in the event of an accidental release of radioactive fission products from the reactor coolant system. The engineered safety features function to localize, control, mitigate, and terminate such accidents and to maintain radiation exposure levels to the public below applicable limits and guidelines, such as 10 CFR 50.34. The following are defined as engineered safety features:

Containment

The containment vessel, discussed in Subsection 6.2.1, is a free standing cylindrical steel vessel with ellipsoidal upper and lower heads. It is surrounded by a Seismic Category I reinforced concrete shield building. The function of the containment vessel, as part of the overall containment system, is to contain the release of radioactivity following postulated design basis accidents. The containment vessel also functions as the safety-related ultimate heat sink by transferring the heat associated with accident sources to the surrounding environment. The following paragraph details this safety-related feature.

Passive Containment Cooling System

The function of the passive containment cooling system, discussed in Subsection 6.2.2, is to maintain the temperature below a maximum value and to reduce the containment temperature and pressure following a postulated design-basis event. The passive containment cooling system removes thermal energy from the containment atmosphere. The passive containment cooling system also serves as the safety-related ultimate heat sink for other design basis events and shutdowns. The passive containment cooling system limits the release of radioactive material to the environment by reducing the pressure differential between the containment atmosphere and the external environment. This diminishes the driving force for leakage of fission products from the containment to the atmosphere.

Containment Isolation System

The major function of the containment isolation system of the AP1000, discussed in Subsection 6.2.3, is to provide containment isolation to allow the normal or emergency passage of fluids through the containment boundary while preserving the integrity of the containment boundary, if required. This prevents or limits the escape of fission products that may result from postulated accidents. Containment isolation provisions are designed so that fluid lines penetrating the primary containment boundary are isolated in the event of an accident. This minimizes the release of radioactivity to the environment.

Passive Core Cooling System

The primary function of the passive core cooling system, discussed in Section 6.3, is to provide emergency core cooling following postulated design-basis events. The passive core cooling system provides reactor coolant system makeup and boration during transients or accidents where the normal reactor coolant system makeup supply from the chemical and volume control system is lost or is insufficient. The passive core cooling system provides safety injection to the reactor coolant system to provide adequate core cooling for the complete range of loss of coolant accident events up to, and including, the double ended rupture of the largest primary loop reactor coolant system piping. The passive core cooling system provides core decay heat removal during transients, accidents, or whenever the normal heat removal paths are lost.

Main Control Room Emergency Habitability System

The main control room emergency habitability system, discussed in Section 6.4, is designed so that the main control room remains habitable following a postulated design basis event. With a loss of all ac power sources, the habitability system will maintain an acceptable environment for continued operating staff occupancy.

Fission Product Control

Post-accident safety-related fission product control for the AP1000, discussed in Section 6.5, is provided by natural removal processes inside containment, the containment boundary, and the containment isolation system. The natural removal processes, including various aerosol removal processes and pool scrubbing, remove airborne particulates and elemental iodine from the containment atmosphere following a postulated design basis event.

6.1 Engineered Safety Features Materials

This section provides a description of the materials used in the fabrication of engineered safety features components and of the provisions to avoid material interactions that could potentially impair the operation of the engineered safety features. A list of engineered safety features was given previously in Section 6.0. Reactor coolant system materials, including branch piping connected to the reactor coolant system, are described in Subsection 5.2.3.

6.1.1 Metallic Materials

Materials for use in engineered safety features are selected for their compatibility with the reactor coolant system and refueling water.

The edition and addenda of the ASME Code applied in the design and manufacture of each component are the edition and addenda established by the requirements of the Design Certification. The use of editions and addenda issued subsequent to the Design Certification is permitted or required based on the provisions in the Design Certification. The baseline used for the evaluations done to support this safety analysis report and the Design Certification is the 1998 Edition, through the 2000 Addenda. When material is procured to later editions or addenda, the design of the component is reconciled to the new material properties in accordance with the rules of the ASME Code, provided that the later edition and addenda are authorized in 10 CFR 50.55a or in a specific authorization as provided in 50.55a(a)(3).

6.1.1.1 Specifications for Principal Pressure-Retaining Materials

The pressure-retaining materials in engineered safety features system components comply with the corresponding material specification permitted by the ASME Code, Section III, Division 1. The material specifications used for pressure-retaining valves in contact with reactor coolant are the specifications used for reactor coolant pressure boundary valves and piping. See Table 5.2-1 for a listing of these specifications. The material specifications for pressure-retaining materials in each component of an engineered safety features system meet the requirements of Article NC-2000 of the ASME Code, Section III, Class 2, for Quality Group B; Article ND-2000 of the ASME Code, Section III, Class 3, for Quality Group C components; and Article NE-2000 of the ASME Code, Section III for containment pressure boundary components.

Containment penetration materials meet the requirements of Articles NC-2000 or NE-2000 of the ASME Code, Section III, Division 1. The quality groups assigned to each component are given in Section 3.2. The pressure-retaining materials are indicated in Table 6.1-1. Materials for ASME Class 1 equipment are provided in Subsection 5.2.3.

The following subsection provides information on the selection and fabrication of the materials in the engineered safety features of the plant.

Components in contact with borated water are fabricated of, or clad with, austenitic stainless steel or equivalent corrosion-resistant material. The use of nickel-chromium-iron alloy in the engineered safety features is limited to Alloy 690 or its associated weld metals Alloys 52 and 152. Nickel-chromium-iron alloy is used where the corrosion resistance of the alloy is an important consideration and where the use of nickel-chromium-iron alloy is the choice because of the coefficient of thermal expansion.

The material for the air storage tanks in the main control room emergency habitability system is tested for Charpy V-Notch per supplement S3 of material specification SA-372 and has an average of 20 to 25 mills of lateral expansion at the lowest anticipated service temperature. The material is not permitted to be weld repaired.

6.1.1.2 Fabrication Requirements

The welding materials used for joining the ferritic base materials of the pressure-retaining portions of the engineered safety features conform to, or are equivalent to, ASME Material Specifications SFA 5.1, 5.5, 5.17, 5.18, 5.20, 5.23, 5.28, 5.29, and 5.30. The welding materials used for joining nickel-chromium-iron alloy in similar base material combination, and in dissimilar ferritic or austenitic base material combination, conform to ASME Material Specifications SFA 5.11 and 5.14, or are similar welding alloys to those in SFA-5.11 or SFA-5.14 developed for improved weldability as allowed by the ASME Boiler and Pressure Vessel Code rules.

The welding materials used for joining the austenitic stainless steel base materials for the pressure-retaining portions of engineered safety features conform to, or are equivalent to, ASME Material Specifications SFA 5.4, 5.9, 5.22, and 5.30. These materials are qualified to the requirements of the ASME Code, Section III and Section IX, and are used in procedures qualified to these same rules. The methods used to control delta ferrite content in austenitic stainless steel weldments in engineered safety features components are the same as those for ASME Code Class 1 components, described in Subsection 5.2.3.4.

The integrity of the safety-related components of the engineered safety features is maintained during component manufacture. Austenitic stainless steel is used in the final heat-treated condition as required by the respective ASME Code, Section II, material specification for the particular type or grade of alloy. Also, austenitic stainless steel materials used in the engineered safety features components are handled, protected, stored, and cleaned according to recognized and accepted methods designed to minimize contamination, which could lead to stress corrosion cracking. These controls for engineered safety features components are the same as those for ASME Code Class 1 components, discussed in Subsection 5.2.3.4. Sensitization avoidance, intergranular attack prevention, and control of cold work for engineered safety features components are the same as the ASME Code Class 1 components discussed in Subsection 5.2.3.4. Cold-worked austenitic stainless steels having a minimum specified yield strength greater than 90,000 psi are not used for components of the engineered safety features.

Information is provided in Section 1.9 concerning the degree of conformance with the following Regulatory Guides:

- Regulatory Guide 1.31, Control of Ferrite Content in Stainless Steel Weld Metal
- Regulatory Guide 1.44, Control of the Use of Sensitized Stainless Steel

Lead, antimony, cadmium, indium, mercury, and tin metals and their alloys are not allowed to come in contact with engineered safety features component parts made of stainless steel or high alloy metals during fabrication or operation. Bearing alloys containing greater than 1 percent of lead, antimony, cadmium, or indium are not used in contact with reactor coolant.

In accordance with Appendix B to 10 CFR Part 50, the quality assurance program establishes measures to provide control of special processes. One element of control is the review and acceptance of vendor procedures that pertain to the fabrication, welding, and other quality assurance methods for safety related component to determine both code and regulatory conformance. Included in this review and acceptance process are those vendor procedures necessary to provide conformance with the requirements of Regulatory Guides 1.31 and 1.44 for engineered safety features components as discussed in Section 6.1 and reactor coolant system components as discussed in Subsection 5.2.3.

6.1.1.3 Specifications for Nonpressure-Retaining Materials

Materials for nonpressure-retaining portions of engineered safety features in contact with borated water or other fluids may be procured under ASTM designation. The principle examples of these items are the in-containment refueling water storage tank liner and the passive containment cooling system storage tank liner.

The walls of the in-containment refueling water storage tank are fabricated of ASTM/ASME A240/SA-240, UNS S32101. This is a chromium, manganese, and nitrogen-strengthened duplex stainless steel with higher ultimate tensile and yield strengths than type 304 and 316 stainless steel. This material can be welded using a matching Duplex 2101 (2304 or 2209) filler metal by any of the commonly used stainless steel welding methods, including shielded metal arc welding (SMAW), gas tungsten arc welding TIG (GTAW), gas metal arc welding MIG (GMAW), flux-cored arc welding (FCW), plasma arc welding (PAW), and submerged arc welding (SAW). This material is used for applications where the higher strength allows reductions in weight and material costs. The material has a resistance to intergranular stress corrosion cracking similar to or better than type 304 and 304L stainless steel.

6.1.1.4 Material Compatibility with Reactor Coolant System Coolant and Engineered Safety Features Fluids

Engineered safety features components materials are manufactured primarily of stainless steel or other corrosion-resistant material. Protective coatings are applied on carbon steel structures and equipment located inside the containment, as discussed in Subsection 6.1.2.

Austenitic stainless steel plate conforms to ASME SA-240. Austenitic stainless steel is confined to those areas or components which are not subject to post-weld heat treatment. Carbon steel forgings conform to ASME SA-350. Austenitic stainless steel forgings conform to ASME SA-182. Nickel-chromium-iron alloy pipe conforms to ASME SB-167. Carbon steel castings conform to ASME SA-352. Austenitic stainless steel castings conform to ASME SA-351.

Hardfacing material in contact with reactor coolant is a qualified low- or zero-cobalt alloy, equivalent to Stellite-6. The use of cobalt-base alloys is minimized. Low- or zero-cobalt alloys used for hardfacing or other applications where cobalt-base alloys have been previously used are qualified by wear and corrosion tests. The corrosion tests qualify the corrosion resistance of the alloy in reactor coolant. Cobalt-free, wear-resistant alloys considered for this application include those developed and qualified in nuclear industry programs.

In post-accident situations where the containment is flooded with water containing boric acid, pH adjustment is provided by the release of trisodium phosphate into the water. The trisodium phosphate is held in baskets located in the floodable volume that includes the steam generator compartments and contains the reactor coolant loop. The addition of trisodium phosphate to the solution is sufficient to raise the pH of the fluid to above 7.0. This pH is consistent with the guidance of NRC Branch Technical Position MTEB-6.1 for the protection of austenitic stainless steel from chloride-induced stress corrosion cracking. Section 6.3 describes the design of the trisodium phosphate baskets.

In the post-accident environment, both aluminum and zinc surfaces in the containment are subject to chemical attack resulting in the production of hydrogen and/or chemical precipitants that can affect long-term core cooling. The amount of aluminum allowed in the containment below the maximum flood level of a design basis loss-of-coolant accident (LOCA) (refer to Subsection 6.3.2.2.7.1, item 3) will be limited to less than 60 pounds during operating conditions. A large potential source of aluminum in the AP1000 containment are the excore detectors described in Subsection 7.1.2.7.2. To avoid sump water contact with the excore detectors, they are enclosed in stainless steel or titanium housings. The non-flooded surfaces would be wetted by condensing steam, but they would not be

subjected to the boric acid or trisodium phosphate solutions since there is no containment spray. For this reason, the amount of aluminum in the excore detectors is not applied to the 60-pound weight limit restriction as they are not subject to the post-design basis accident (DBA) environment as a result of steel/titanium encasement. Furthermore, other aluminum, within containment encased in stainless steel/titanium that can ensure interaction with the boric acid or trisodium phosphate solutions does not occur, should not be applied to the 60-pound weight limit. Nonsafety-related passive autocatalytic recombiners are provided to limit hydrogen buildup inside containment.

6.1.1.5 Integrity of Safety-Related Components

The pH adjustment baskets provide for long-term pH control. In the case of inadvertent short-term flooding when the pH adjustment baskets remain above the flood level, the condition of the material in contact with the fluid is evaluated prior to return to operation. Based on previous industry testing and experience, the behavior of austenitic stainless steels in the post-design basis accident environment is acceptable. Cracking is not anticipated, provided that the core cooling pH is maintained at an adequate level.

6.1.1.6 Thermal Insulation

The majority of the engineered safety features insulation used in the AP1000 containment is reflective metallic insulation. Fibrous insulation may be used if it is enclosed in stainless steel cans. The selection, procurement, testing, storage, and installation of nonmetallic thermal insulation provides confidence that the leachable concentrations of chloride, fluoride, and silicate are in conformance with Regulatory Guide 1.36. Conformance with Regulatory Guide 1.36 is summarized in Section 1.9.

6.1.1.7 Component and System Cleaning

See Subsection 1.9.1 for a discussion on the provisions of Regulatory Guide 1.37 for the cleaning of components and systems.

6.1.2 Organic Materials

6.1.2.1 Protective Coatings

6.1.2.1.1 General

The AP1000 is divided into four areas with respect to the use of protective coatings. These four areas are:

- Inside containment
- Exterior surfaces of the containment vessel
- Radiologically controlled areas outside containment
- Remainder of plant

The considerations for protective coatings differ for these four areas and the coatings selection process accounts for these differing considerations. The AP1000 design considers the function of the coatings, their potential failure modes, and their requirements for maintenance. Table 6.1-2 lists different areas and surfaces inside containment and on the containment shell that have coatings, their functions, and to what extent their coatings are related to plant safety.

Coatings used outside containment do not provide functions related to plant safety except for the coating on the outside of the containment shell. The coating on the outside of the containment shell above elevation 135′ 3″ shell supports passive containment cooling system heat transfer and is classified as a Service Level III coating.

The coating used on the inside surface of the containment shell, greater than 7′ above the operating deck, supports the transfer of thermal energy from the post-accident atmosphere inside containment to the containment shell. Passive containment cooling system testing and analysis have been performed with a coating. This coating is classified as a Service Level I coating.

Coatings are not used in the vicinity of the containment recirculation screens to minimize the possibility of debris clogging the screens. Subsection 6.3.2.2.7.3 defines the area in the vicinity of the recirculation screens where coatings are not used.

Coatings used inside containment, except for inorganic zinc used on the inside surface of the containment shell, and on other components, are classified as Service Level II coatings because their failure does not prevent functioning of the engineered safety features. If the Service Level II coatings delaminate, the solid debris they may form will not have a negative impact on the performance of safety-related post-accident cooling systems. See Subsection 6.1.2.1.5 for a discussion of the factors including plant design features and low water flows that permit the use of Service Level II coatings inside containment. Protective coatings are maintained to provide corrosion protection for the containment pressure boundary and for other system components inside containment.

The corrosion protection of the containment shell is a safety-related function. Good housekeeping and decontamination functions of the coatings are nonsafety-related functions.

For information on coating design features, quality assurance, material and application requirements, and performance monitoring requirements, see Subsection 6.1.2.1.6.

6.1.2.1.2 Inside Containment

Carbon Steel

Inorganic zinc is the basic coating applied to the containment vessel. Below the operating floor, most of the inorganic zinc coating is top coated with epoxy where enhanced decontamination is desired. The epoxy top coat on the containment vessel extends above the operating floor up to a wainscot height of 7 feet above the operating floor. Carbon steel and structural modules within the containment are coated with self-priming high solids epoxy (SPHSE). Where practical, miscellaneous carbon steel items (such as stairs, ceilings, gratings, ladders, railings, conduit, duct, and cable tray) are hot-dip galvanized. Steel surfaces subject to immersion during normal plant operation (such as sumps and gutters) are stainless steel or are coated with SPHSE applied directly to the carbon steel without an inorganic zinc primer. Carbon steel structures and equipment are assembled in modules, and the modules are coated in the fabrication shop under controlled conditions.

Concrete

Concrete surfaces inside containment are coated primarily to prevent concrete from dusting, to protect it from chemical attack, and to enhance decontaminability. In keeping with ALARA goals, the exposed concrete surfaces are made as decontaminable as practical in areas of frequent personnel access and areas subject to liquid spray, splash, spillage, or immersion.

Exposed concrete surfaces inside containment are coated with an epoxy sealer to help bind the concrete surface together and reduce dust that can become contaminated and airborne. Concrete floors inside containment are coated with a self-leveling epoxy or SPHSE floor coating. Exposed

concrete walls inside containment are coated to a minimum height of 7 feet with an epoxy or SPHSE applied over an epoxy surfacer that has been struck flush.

6.1.2.1.3 Exterior of Containment Vessel

The exterior of the containment vessel is coated with the same inorganic zinc as is used inside of the containment vessel. The inorganic zinc coating enhances heat transfer by providing good heat conduction and by enhancing surface wetting of the exterior surface of the containment vessel. The inorganic zinc also provides corrosion protection.

6.1.2.1.4 Radiologically Controlled Areas Outside Containment and Remainder of Plant

The coatings used in the radiologically controlled areas outside containment and in the remainder of the plant are also classified as Service Level II coatings. However, these coatings are selected, specified, and applied in a manner that optimizes performance and standardization within the AP1000 design. Therefore, wherever practical, the same coating systems are used in radiologically controlled areas outside containment as are used inside containment. The ALARA concept is carried through in areas subject to radiation exposure and possible radiological contamination. The remainder of the plant coating systems are commercial grade materials that are selected and applied according to the expected conditions in the specific areas where the coatings are applied.

The coatings used in radiologically controlled areas outside of containment are identified in the following.

Carbon Steel Surfaces

Carbon steel is coated with either SPHSE or an inorganic zinc coating with an epoxy top coat over the inorganic zinc. An epoxy top coat is used in areas subject to decontamination such as a 7 foot wainscot in high traffic areas or on surfaces subject to radiologically contaminated liquid spray, splash, or spills.

Concrete Floors

Floors subject to heavy traffic or contaminated liquid spills are coated with self-leveling epoxy or SPHSE floor coating. An epoxy or SPHSE coat is applied a minimum of 1 foot up the wall where liquid spills might splash. Floors subject to light traffic and not subject to contaminated liquid spills are coated with an epoxy or SPHSE coat. The epoxies applied to the concrete surfaces are the same epoxies used as a top coat for the inorganic zinc-coated steel or SPHSE.

Concrete Walls

A 7-foot wainscot on exposed concrete walls in high-traffic areas and any surfaces of walls subject to spray, splash, or spills of contaminated liquids are coated with an epoxy coat or SPHSE applied over an epoxy surfacer that has been struck flush. The epoxies used on concrete surfaces are the same as that used as a top coat for the inorganic zinc-coated steel or SPHSE. Remaining concrete walls are coated with an epoxy sealer to reduce or eliminate dusting.

Concrete Ceilings

Exposed concrete ceilings are coated with an epoxy sealer to reduce dusting.

6.1.2.1.5 Safety Evaluation

This subsection describes the basis for classifying coatings as Service Level I, II, or III. Table 6.1-2 identifies which coatings are classified as Service Level I and Service Level III.

The inorganic zinc coating on the outside of the containment shell above elevation 135' 3′ supports passive containment cooling system heat transfer and is classified as a Service Level III coating.

The inorganic zinc coating used on the inside surface of the containment shell, greater than 7' above the operating deck, supports the transfer of thermal energy from the post-accident atmosphere inside containment to the containment shell. Passive containment cooling system testing and analysis have been performed with an inorganic zinc coating. This coating is classified as Service Level I coating.

The AP1000 has a number of design features that facilitate the use of Service Level II coatings inside containment. These features include a passive safety injection system that provides a long delay time between a LOCA and the time recirculation starts. This time delay provides time for settling of debris. These passive systems also flood the containment to a high level which allows the use of containment recirculation screens that are located well above the floor and are relatively tall. Significant volume is provided for the accumulation of coating debris without affecting screen plugging. These screens are protected by plates located above the screens that extend out in front and to the side of the screens. Coatings are not used under these plates in the vicinity of the screens. The protective plates, together with low recirculation flow, approach velocity and the screen size preclude postulated coating debris above the plates from reaching the screens. Refer to Subsection 6.3.2.2.7.3 for additional discussion of these screens, their protective plates and the areas where coatings are prohibited from being used.

The recirculation inlets are screened enclosures located near the northwest and southwest corners of the east steam generator compartment (refer to the figures in Subsection 6.3.2.2.7.3). The enclosure bottoms are located above the surrounding floor, which prevent ingress of heavy debris (density ≥ 100 lb_m/ft^3). Additionally, the screens are oriented vertically and are protected by large plates located above the screens, further enhancing the capability of the screens to function with debris in the water. The screen mesh size and the surface area of the containment recirculation screens in the AP1000, in conjunction with the large floor area for debris to settle on, can accommodate failure of coatings inside containment during a design basis accident even though the residue of such a failure is unlikely to be transported to the vicinity of the enclosures.

The AP1000 does not have a safety-related containment spray system. The containment spray system provided in the AP1000 is only used for beyond design basis events. This reduces the chance that coatings will peel off surfaces inside containment because the thermal shock of cold spray water on hot surfaces combined with the rapid depressurization following spray initiation are recognized as contributors to coating failure. Parts of the containment below elevation 110′ are flooded and water is recirculated through the passive core cooling system. However, the volume of water moved in this manner is relatively small and the flow velocity is very low.

The coating systems used inside containment also include epoxy and/or self-priming high solids epoxy coatings. These are applied to concrete substrates, as top coats over the inorganic zinc coating, and directly to steel, as noted in Subsection 6.1.2.1.2. The failure modes of these systems could include delamination or peeling if the epoxy coatings are not properly applied (References 1, 2, 3). The epoxies applied to concrete and carbon steel surfaces are sufficiently heavy (dry film density greater than 100 lb/ft^3) so that transport of small chips with the low water velocity in the AP1000 containment is limited.

Inside containment, there are components coated with various manufacturers' standard coating systems. These coating systems are generally not required to have Class I or III safety classification as delineated in Table 6.1-2; however, those located below the maximum flood level of a design basis LOCA, or where there is sufficient water flow to transport debris, are required to be sufficiently heavy (dry film density greater than or equal to 100 lb/ft^3) so that transport of small chips with the low water velocity in the AP1000 containment is limited.

If a coating on walls, structures, or components has a dry film density less than 100 lb/ft^3, then testing and/or analysis must be performed to demonstrate that the debris is not transported to an AP1000 screen or into the core through a flooded break. The testing and/or analysis must be approved by the NRC.

In addition, inorganic zinc should be used only on surfaces that may be exposed to temperatures that are above the limits of epoxy coatings during normal operating conditions; inorganic zinc coatings used in such applications are required to be Safety – Service Level I to prevent detachment during a LOCA since such debris is not likely to settle out.

Requirements related to production of hydrogen as a result of zinc corrosion in design basis accident conditions, including the zinc in paints applied inside containment, were eliminated by the final rule, effective October 16, 2003, amending 10 CFR 50.44, “Standards for Combustible Gas Control System in Light-Water-Cooled Power Reactors.”

6.1.2.1.6 Quality Assurance Features

A number of quality assurance features provide confidence that the coating systems inside the containment, on the exterior of the containment vessel and in potentially contaminated areas outside containment will perform as intended. These features enhance the ALARA program and enhance corrosion resistance. The features are discussed in the following paragraphs.

Service Level I and Service Level III Coatings

The quality assurance program for Service Level I and Service Level III coatings conforms to the requirements of ASME NQA-1-1983 as endorsed in Regulatory Guide 1.28. Safety related coatings meet the pertinent provisions of 10CFR Part 50 Appendix B to 10CFR Part 50. The service level classification of coatings is consistent with the positions given in Revision 1 of Regulatory Guide 1.54, “Service Level I, II, and III Protective Coatings Applied to Nuclear Power Plants.” Service Level I and Service Level III coatings used in the AP1000 are tested for radiation tolerance and for performance under design basis accident conditions. Where decontaminability is desired, the coatings are evaluated for decontaminability. The coating applicator submits and follows acceptable procedures to control surface preparation, application of coatings and inspection of coatings. The painters are qualified and certified, and the inspectors are qualified and certified.

The inorganic zinc coating used on the inside surface (Service Level I coatings) and outside surface (Service Level III coatings) of the containment shell is inspected using a non-destructive dry film thickness test and a MEK rub test. These inspections are performed after the initial application and after recoating. Long term surveillance of the coating is provided by visual inspections performed during refueling outages. Other inspections are not required.

During the design and construction phase, the coatings program associated with selection, procurement and application of safety related coatings is performed to applicable quality standards. The requirements for the coatings program are contained in certified drawings and/or standards and specifications controlling the coating processes of the designer (Westinghouse) (these design documents will be available prior to the procurement and application of the coating material by the constructor of the plant). Regulatory Guide 1.54 and ASTM D5144 (Reference 201) form the basis for the coating program.

During the operations phase, the coatings program is administratively controlled in accordance with the quality assurance program implemented to satisfy 10 CFR Part 50, Appendix B, and 10 CFR Part 52 requirements. The coatings program provides direction for the procurement, application, inspection, and monitoring of safety related coating systems. Prior to initial fuel loading, a

consolidated plant coatings program will be in place to address procurement, application, and monitoring (maintenance) of those coating system(s) for the life of the plant.

Coating system monitoring requirements for the containment coating systems are based on ASTM D5163 (Reference 202), "Standard Guide for Establishing Procedures to Monitor the Performance of Coating Service Level I Coating Systems in an Operating Nuclear Power Plant," and ASTM D7167 (Reference 203), "Standard Guide for Establishing Procedures to Monitor the Performance of Safety-Related Coating Service Level III Lining Systems in an Operating Nuclear Power Plant." Any anomalies identified during coating inspection or monitoring are resolved in accordance with applicable quality assurance requirements.

Refer to Table 6.1-2 for identification of Service Level I and Service Level III coating applications in the AP1000.

Service Level II Coatings

The use of Service Level II coatings inside containment is based on the use of selected types of coatings and the properties of the coatings. To preclude the use of inappropriate coatings, the procurement of Service Level II coatings used inside containment is considered a safety-related activity whereas the Service Level II coatings used outside the containment are nonsafety-related.

Such Service Level II coatings used inside containment are procured to the same standards as Service Level I coatings with regard to radiation tolerance and performance under design basis accident conditions as discussed below.

Appendix B to 10 CFR Part 50 applies to procurement of Service Level II coatings used inside containment on internal structures, including walls, floor slabs, structural steel, and the polar crane, except for such surfaces located inside the chemical and volume control system room # 11209. Service Level II coatings used in the chemical and volume control system room are not subject to procurement under 10 CFR 50, Appendix B, because the room is connected to the containment in a limited way through a drain line. Service Level II coatings used on manufactured components are not subject to procurement under 10 CFR 50, Appendix B, because their high density limits the transport with the low water velocity in the AP1000 containment. In addition, the drain line is routed to the waste liquid processing system sump which is located well below and separate from the recirculation screens. The specified Service Level II coatings used inside containment are tested for radiation tolerance and for performance under design basis accident conditions. Where decontaminability is desired, the coatings are evaluated for decontaminability.

The Service Level II coatings used inside containment are as shown in Table 6.1-2. Coating system application, inspection and monitoring requirements for the Service Level II coatings used inside containment will be performed in accordance with a program based on ASTM D5144 (Reference 201), “Standard Guide for Use of Protective Coating Standards in Nuclear Power Plants,” and the guidance of ASTM D5163 (Reference 202), “Standard Guide for Establishing Procedures to Monitor the Performance of Coating Service Level I Coating Systems in an Operating Nuclear Power Plant.” Any anomalies identified during coating inspection or monitoring are resolved in accordance with applicable quality requirements.This program is not subject to 10 CFR 50, Appendix B, quality assurance requirements.

Due to the use of modularized construction, a significant portion of the containment coatings are shop applied to the containment vessel and to piping, structural and equipment modules. This application of coatings under controlled shop conditions provides additional confidence that the coatings will perform as designed and as expected.

The coatings used in radiologically controlled areas outside containment are tested for radiation resistance and evaluated for decontaminability; they are not specified to be design basis accident

tested, and they are not procured to Appendix B to 10 CFR 50. Where practical, the same coating materials are used in radiologically controlled areas outside containment as are used inside containment. This provides a high level of quality and optimizes maintenance painting over the life of the plant.

6.1.2.2 Other Organic Materials

A listing of other organic materials in the containment is developed based on the specific type of equipment and the supplier selected to provide it. Materials are evaluated for potential interaction with engineered safety features to provide confidence that the performance of the engineered safety features is not unacceptably affected.

6.1.3 Combined License Information Items

6.1.3.1 Procedure Review

The review of vendor fabrication and welding procedures or other quality assurance methods to judge conformance of austenitic stainless steels with Regulatory Guides 1.31 and 1.44 is addressed in Subsection 6.1.1.2.

6.1.3.2 Coating Program

The programs to control procurement, application, inspection, and monitoring of Service Level I, Service Level II, and Service Level III coatings are addressed in Subsection 6.1.2.1.6.

6.1.4 References

1. NUREG-0797, “Safety Evaluation Report related to the operation of Comanche Peak Steam Electric Station, Units 1 and 2.”

2. Bolt, R. O. and J. G. Carroll, “Radiation Effects on Organic Materials,” Academic Press, New York, 1963, Chapter 12.

3. Parkinson, W. W. and O. Sisman, “The Use of Plastics and Elastomers in Nuclear Radiation,” Nuclear Engineering and Design 17 (1971), pp 247-280, North-Holland Publishing Co., Amsterdam.

201. ASTM D5144-08, “Standard Guide for Use of Protective Coating Standards in Nuclear Power Plants.”

202. ASTM D5163-05a, “Standard Guide for Establishing Procedures to Monitor the Performance of Coating Service Level I Coating Systems in an Operating Nuclear Power Plant.”

203. ASTM D7167-05, “Standard Guide for Establishing Procedures to Monitor the Performance of Safety-Related Coating Service Level III Lining Systems in an Operating Nuclear Power Plant.”

Table 6.1-1
Engineered Safety Features Pressure-Retaining Materials

Component	Materials
Core makeup tank	Refer to Subsection 5.2.3
Passive residual heat removal heat exchanger	Refer to Subsection 5.3.4, Table 5.2-1
In-containment refueling water storage tank	ASTM A240 S32101 or TP304
Passive containment cooling system (safety-related portion) Passive containment cooling system water storage tank Valves Piping Fittings PCS Recirculation Subsystem Valves Piping Fittings	 ASTM A240 TP304 SA-182 TP304L SA-312 TP304L SA-182 TP304L SA-217 Grade WC6 SA-335 Grade P11 SA-234 Grade WP11
Spargers Piping Fittings	 SA-358 TP304 or TP316 or SA-312 TP304 or TP316 SA-182 TP304 or SA-403 WP304 or WP316
Containment vessel and penetrations	Refer to Subsection 3.8.2.1
Valves in contact with borated water	Refer to Subsection 5.2.3, Table 5.2-1
Main control room emergency habitability system Valves Pipe Air storage tanks	 SA-182 Grade F11 SA-335 Grade P11 SA-372

Table 6.1-2 (Sheet 1 of 2)
AP1000 Coated Surfaces, Containment Shell and Surfaces Inside Containment

Surface	Boundary	Surface Material	Coating	Coating Functions/Safety Classifications		Coating Classification (1)
Containment Shell, Outside Surface	Shell surfaces above elevation 135′ 3″	Carbon Steel	Inorganic Zinc Coating	1 Promote wettability 2 Heat conduction 3 Nondetachable 4 Inhibit corrosion	1 Safety 2 Safety 3 Safety 4 Safety	Safety – Service Level III
Containment Shell, Inside Surface	Shell surfaces above 7 feet above operating deck	Carbon Steel	Inorganic Zinc Coating	1 Promote wettability 2 Heat conduction 3 Nondetachable 4 Inhibit corrosion	1 Safety (2) 2 Safety 3 Safety 4 Safety	Safety – Service Level I
	Shell surfaces below 7 feet above operating deck	Carbon Steel	Inorganic Zinc Coating with Epoxy Top Coat	1 Nondetachable 2 Inhibit corrosion 3 Enhance radioactive decontamination	1 Safety 2 Safety 3 Safety	Safety – Service Level I
Components Inside Containment	(6)	Material of Component (6)	NA (6)	1 Ensure settling 2 Inhibit corrosion	1 Safety (7) 2 Non-safety	Non-safety (7) Service Level II
Inside Containment	Areas surrounding the containment recirculation screens (3)	NA	NA	NA	NA	NA
	Concrete walls, ceilings and floors (4)	Concrete	Self-Priming High Solid Epoxy	1 Ensure settling 2 Prevent dusting 3 Protect from chemical attack 4 Enhance radioactive decontamination 5 Heat conduction	1 Safety (5) 2 Nonsafety 3 Nonsafety 4 Nonsafety 5 Safety (5)	Nonsafety (5) Service Level II

Table 6.1-2 (Sheet 2 of 2)
AP1000 Coated Surfaces, Containment Shell and Surfaces Inside Containment

Surface	Boundary	Surface Material	Coating	Coating Functions/Safety Classifications		Coating Classification (1)
	Steel walls, ceilings, floors, columns, beams, braces, plates (4)	Carbon Steel	Self-Priming High Solid Epoxy	1 Ensure settling 2 Inhibit corrosion 3 Enhance radioactive decontamination 4 Heat conduction	1 Safety (5) 2 Nonsafety 3 Nonsafety 4 Safety (5)	Nonsafety (5) Service Level II

Notes:

1. The applicability of 10 CFR 50, Appendix B, and other codes and standards to coatings and their application are discussed in Subsection 6.1.2.1.6.
2. An inorganic zinc coating on the inside of the containment shell is not required to promote wettability, however it has been included in PCS testing and analysis and as a result is considered safety-related.
3. Areas around PXS recirculation screens do not require coatings as defined in Subsection 6.3.2.2.7.3.
4. 10 CFR 50, Appendix B, does not apply to DBA testing and manufacture of coatings in the CVS room inside containment as discussed in Subsection 6.1.2.1.6.
5. 10 CFR 50, Appendix B, applies to DBA testing and manufacture of these Service Level II coatings as discussed in Subsection 6.1.2.1.6.
6. The explicit coating material is not required to be specified. However, the coating material must comply with the restrictions set forth in Subsection 6.1.2.1.5 and Table 6.1-2 for components located below the maximum flood level for a design basis LOCA or where there is sufficient water flow to transport debris. If a coating on walls, structures, or components has a dry film density less than 100 lb/ft^3, then testing and/or analysis must be performed to demonstrate that the debris is not transported to an AP1000 screen or into the core through a flooded break. The testing and/or analysis must be approved by the NRC. Inorganic zinc should be used only on surfaces that may be exposed to temperatures that are above the limits of epoxy coatings during normal operating conditions; inorganic zinc coatings used in such applications are required to be Safety – Service Level I to prevent detachment during a LOCA since such debris is not likely to settle out.
7. 10 CFR 50, Appendix B does not apply to DBA testing and manufacture of coatings used on manufactured components as discussed in Subsection 6.1.2.1.6.

6.2 Containment Systems

6.2.1 Containment Functional Design

6.2.1.1 Containment Structure

6.2.1.1.1 Design Basis

The containment system is designed such that for all break sizes, up to and including the double-ended severance of a reactor coolant pipe or secondary side pipe, the containment peak pressure is below the design pressure. A summary of the results is presented in Table 6.2.1.1-1.

This capability is maintained by the containment system assuming the worst single failure affecting the operation of the passive containment cooling system (PCS). For primary system breaks, loss of offsite power (LOOP) is assumed. For secondary system breaks, offsite power is assumed to be available when it maximizes the mass and energy released from the break. Additional discussion of the assumptions made for secondary side pipe breaks may be found in Subsection 6.2.1.4.

The single failure postulated for the containment pressure/temperature calculations is the failure of one of the valves controlling the cooling water flow for the PCS. Failure of one of these valves would lead to cooling water flow being delivered to the containment vessel through two of three delivery headers. This results in reduced cooling flow for PCS operation. No other single failures are postulated in the containment analysis.

The containment integrity analyses for the AP1000 employ a multivolume lumped parameter model to study the long-term containment response to postulated Loss of Coolant Accidents (LOCA) and Main Steam Line Break (MSLB) accidents.

The analyses presented in this section are based on assumptions that are conservative with respect to the containment and its heat removal systems, such as minimum heat removal, and maximum initial containment pressure.

The containment design for the Safe Shutdown Earthquake (SSE) is discussed in Subsection 3.8.2.

The minimum containment backpressure used in the Passive Core Cooling System (PXS) analysis is discussed in Subsection 6.2.1.5.

6.2.1.1.2 Design Features

The operation of the PCS is discussed in Subsection 6.2.2. The arrangement of the containment and internal structures is described in Section 1.2.

The reactor coolant loop is surrounded by structural walls of the containment internal structures. These structural walls are a minimum of 2-feet - 6-inches thick and enclose the reactor vessel, steam generators, reactor coolant pumps, and the pressurizer.

The containment vessel is designed and constructed in accordance with the ASME Code, Section III, Subsection NE, Metal Containment, as described in Subsection 3.8.2.

Structural steel non-pressure retaining parts such as ladders, walkways, and handrails are designed to the requirements for steel structures defined in Subsection 3.8.4.

The design features provide adequate containment sump levels following a design basis event as described in Section 3.4.

Containment and subcompartment atmospheres are maintained during normal operation within prescribed pressure, temperature, and humidity limits by means of the containment air recirculation system (VCS), and the central chilled water system (VWS). The recirculation system cooling coils are provided with chilled water for temperature control. The filtration supply and exhaust subsystem can be utilized periodically to purge the containment air for pressure control. Periodic inspection and maintenance verify functional capability.

6.2.1.1.3 Design Evaluation

The Westinghouse-GOTHIC (WGOTHIC) computer code (Reference 20) is a computer program for modeling multiphase flow in a containment transient analysis. It solves the conservation equations in integral form for mass, energy, and momentum for multicomponent flow. The momentum conservation equations are written separately for each phase in the flow field (drops, liquid pools, and atmosphere vapor). The following terms are included in the momentum equation: storage, convection, surface stress, body force, boundary source, phase interface source, and equipment source.

To model the passive cooling features of the AP1000, several assumptions are made in creating the plant decks. The external cooling water does not completely wet the containment shell, therefore, both wet and dry sections of the shell are modeled in the WGOTHIC analyses. The analyses use conservative coverage fractions to determine evaporative cooling.

Heat conduction from the dry to wet section is considered in the analysis. The combination of passive containment cooling system coverage area and heat conduction from the dry to wet sections is explained in Chapter 7 of Reference 20. An analysis is also performed for the limiting LOCA event without considering heat conduction from the dry to wet section. The analyses conservatively assume that the external cooling water is not initiated until 400 seconds (Reference 36) into the transient, allowing time to initiate the signal and to fill the headers and weirs and to develop the flow down the containment side walls. The effects of water flowing down the shell from gravitational forces are explicitly considered in the analysis.

The containment initial conditions of pressure, temperature, and humidity are provided in Table 6.2.1.1-2.

The maximum safety noncoincident wet bulb temperature for Turkey Point Units 6 & 7 is increased from 86.1°F to 87.4°F; however, there are no impacts on the performance of the safety systems.

For the LOCA events, two double-ended guillotine reactor coolant system pipe breaks are analyzed. The breaks are postulated to occur in either a hot or a cold leg of the reactor coolant system. The hot leg break results in the highest blowdown peak pressure. The cold leg break results in the higher post-blowdown peak pressure. The cold leg break analysis includes the long term contribution to containment pressure from the sources of stored energy, such as the steam generators. The LOCA mass and energy releases described in Subsection 6.2.1.3 are used for these calculations.

For the MSLB event, a representative pipe break spectrum is analyzed. Various break sizes and power levels are analyzed with the WGOTHIC code. The MSLB mass and energy releases described in Subsection 6.2.1.4 are used for these calculations.

The results of the LOCA and MSLB postulated accidents are provided in Table 6.2.1.1-1. A comparison of the containment integrity acceptance criteria to General Design Criteria is provided in Table 6.2.1.1-3.

The containment pressure response for the peak pressure steam line break case is provided in Figure 6.2.1.1-1. The containment temperature response for the peak temperature steam line break case is provided in Figure 6.2.1.1-2.

The passive internal containment heat sink data used in the WGOTHIC analyses is presented in Reference 20, Section 13 and updated in Reference 36. Data for both metallic and concrete heat sinks are presented. Additional heat sink data utilized in the containment peak pressure analysis, as updated in Reference 36, are identified in Table 6.2.1.1-10. These additional heat sinks are characterized as metal gratings with material type and minimum required surface area and volume within the subcompartment defined in Table 6.2.1.1-10. The containment pressure and temperature responses to a double-ended cold leg guillotine are presented in Figures 6.2.1.1-5 and 6.2.1.1-6 for the 24 hour portion of the transient and Figures 6.2.1.1-7 and 6.2.1.1-8 for the 72 hour transient. A separate analysis for the double-ended cold leg guillotine LOCA event, without considering heat conduction from the dry to wet section, results in somewhat higher containment pressure in the long term, but still below 50 percent of design pressure at 24 hours. This separate analysis confirms the assumption in Subsection 15.6.5.3.3 of reducing the containment leakage to half its design value at 24 hours. The containment pressure and temperature response to a double-ended hot leg guillotine break are presented in Figures 6.2.1.1-9 and 6.2.1.1-10. The physical properties of the materials corresponding to the heat sink information are presented in Table 6.2.1.1-8.

The instrumentation provided outside containment to monitor and record the containment pressure and the instrumentation provided inside containment to monitor and record temperature are found in Section 7.5.

6.2.1.1.4 External Pressure Analysis

Certain design basis events and credible inadvertent systems actuation have the potential to result in containment external pressure loads. Evaluations of these events show that a loss of all ac power sources during cold ambient conditions has the potential for creating the worst-case external pressure load on the containment vessel. This event leads to a reduction in the internal containment heat loads from the reactor coolant system and other active components, thus resulting in a temperature reduction within the containment and an accompanying pressure reduction. Evaluations are performed to determine the maximum external pressure to which the containment may be subjected, and to develop the allowable operating temperature bands presented in LCO 3.6.10 of the Technical Specifications.

The bounding scenario results from a postulated loss of ac power sources (station blackout). This scenario, along with bounding assumptions and initial conditions, will be used to determine the maximum expected external pressure transient. The containment pressure response from the bounding transient will be used for sizing the containment vacuum relief system and will verify that the vacuum relief system is capable of mitigating the most bounding external pressure scenario.

The evaluation assumed a 25°F ambient temperature with no outside wind blowing to maximize the containment internal temperature and corresponding containment vessel shell temperatures. The initial internal containment temperature is in equilibrium at the maximum allowable value of 120°F. A 25°F outside temperature coupled with a 120°F internal temperature exceeds the maximum allowable internal/external temperature differential depicted in the AP1000 Technical Specifications (LCO 3.6.10). However, this is conservative and bounding as described below. Pre-transient equilibrium analyses were performed to determine the containment equilibrium values for internal temperature and containment shell internal/external temperatures to use to initialize the conditions for the bounding analysis. Once the equilibrium temperature values were determined, the bounding analysis was performed with containment internal relative humidity set to 82 percent. A conservatively large value for humidity coupled with the assumed maximum containment internal temperature creates the largest potential for external pressure as this maximizes the partial pressure

of steam vapor, vapor concentration, and corresponding condensation rate. These parameters represent the dominant effect for the determination of the bounding external pressure scenario. A negative 0.2 psig initial containment pressure is used for this evaluation. At transient initiation, the external wind is assumed to instantaneously accelerate to 48 mph (24.8 ft/s in annulus riser region) and the external temperature is assumed to begin decreasing at a rate of 30°F/hr. It is also conservatively assumed that no air leakage occurs into the containment during the transient. The key assumptions for containment initial conditions and containment transient conditions are listed in Table 6.2.1.1-9.

The external pressure evaluations are performed using WGOTHIC with conservatively low estimates of the containment heat loads and conservatively high heat removal through the containment vessel consistent with the limiting assumptions stated above. Results of these evaluations are used to develop the maximum depressurization rate of containment for use in sizing the active safety grade containment vacuum relief system. Figure 6.2.1.1-11 shows that the performance of the vacuum relief system is sufficient to mitigate the maximum expected external pressure scenario.

6.2.1.2 Containment Subcompartments

6.2.1.2.1 Design Basis

Subcompartments within containment are designed to withstand the transient differential pressures of a postulated pipe break. These subcompartments are vented so that differential pressures remain within structural limits. The subcompartment walls are challenged by the differential pressures resulting from a break in a high energy line. Therefore, a high energy line is postulated, with a break size chosen consistent with the position presented in Section 3.6, for analyzing the maximum differential pressures across subcompartment walls.

Section 3.6 describes the application of the mechanistic pipe break criteria, commonly referred to as leak-before-break (LBB), to the evaluation of pipe ruptures. This eliminates the need to consider the dynamic effects of postulated pipe breaks for pipes which qualify for LBB. However, the analyses of containment pressure and temperature, emergency core cooling, and environmental qualification of equipment are based on double-ended guillotine (DEG) reactor coolant system breaks and through-wall cracks.

The pressurizer diameter and height were changed after the original subcompartment analysis was performed. The subcompartment analysis has been evaluated for the changes in the pressurizer. The results of this evaluation have shown that there is a small impact on the analysis and the conclusions remain valid. The output provided in this section for the analysis is representative of the transient phenomenon (Reference 34).

6.2.1.2.1.1 Summary of Subcompartment Pipe Break Analyses

Each subcompartment is analyzed for effects of differential pressures resulting from the break of the most limiting line in the subcompartment which has not been evaluated for LBB.

The subcompartment analysis demonstrates that the wall differential pressures resulting from the most limiting high energy line break within the subcompartments are within the design capability.

6.2.1.2.2 Design Features

The plant general arrangement drawings shown in Section 1.2 include descriptions of the containment sub-compartments and surrounding areas. The general arrangement drawings are used in assembling the subcompartment analysis model.

Vent paths considered in the analyses are shown in the general arrangement drawings and consist of floor gratings and openings through walls. In the AP1000 subcompartment analyses, no credit is taken for vent paths that become available only after the occurrence of the postulated break (such as blowout panels, doors, hinged panels and insulation collapsing).

6.2.1.2.3 Design Evaluation

The TMD computer code (Reference 2) is used in the subcompartment analysis to calculate the differential pressures across subcompartment walls. The TMD code has been reviewed by the NRC and approved for use in subcompartment differential pressure analyses.

Specific information relative to details on the analysis, such as noding diagrams, volumes, vent areas, and initial conditions, are provided in Reference 26.

The methodology used to generate the short term mass and energy releases is described in Subsection 6.2.1.3.1.

The initial atmospheric conditions used in the TMD subcompartment analysis are selected so that the calculated differential pressures are maximized. These conditions are chosen according to criteria identified in Subsection 6.2.1.2 of NUREG-0800 and include the maximum allowable air temperature, minimum absolute pressure, and zero percent relative humidity.

The containment and subcompartment atmospheres during normal operating conditions are maintained within prescribed pressure, temperature, and humidity limits by means of the containment air recirculation system (VCS), and the central chilled water system (VWS). The recirculation system cooling coils are provided with chilled water to provide sufficient temperature control. The filtration supply and exhaust subsystem can be utilized to purge the containment air for pressure control. Periodic inspection and maintenance are performed to verify functional capability.

6.2.1.2.3.1 Flow Equation

The flow equations used by the TMD code to calculate the flow between nodes are described in Reference 2. These flow equations are based on the unaugmented critical flow model, which demonstrate conservatively low critical flow velocity predictions compared to experimental test data. Due to the TMD calculation methods presented in Subsection 1.3.1 of Reference 2, 100 percent entrainment results in the highest calculated differential pressures and therefore this degree of entrainment is conservatively assumed in the subcompartment analysis.

6.2.1.2.3.2 Pipe Breaks

The subcompartment analysis for the steam generator compartment is performed assuming a double-ended guillotine break in a 3-inch inside diameter reactor cooling system hot leg or cold leg pipe or a 4-inch double-ended steam generator blowdown line, or a 4-inch pressurizer spray line break. The breaks can be assumed to occur between the 84-foot elevation and the 135-foot elevation of the steam generator compartment. Because the TMD code assumes homogeneous mixtures within a node, the specific location of the break within the node is not critical to the differential pressure calculation. No flow restrictions exist that limit the flow out of the break.

The analysis for the pressurizer compartment pipe and valve room is performed assuming a double-ended guillotine break in a 4-inch inside diameter reactor coolant system spray line. This break envelopes the branch lines that could be postulated to rupture in this area. The break is assumed to occur between the 107-foot elevation and the 163-foot elevation of the pressurizer compartment or the 118-foot to 135-foot elevations of the pressurizer spray valve room.

The analysis for the steam generator vertical access area is performed assuming a double-ended guillotine break in a 3-inch inside diameter reactor coolant system cold-leg pipe. This break envelopes the branch lines that could be postulated to rupture in this area. The break is assumed to occur between the 83-foot elevation and the 103-foot elevation of the steam generator vertical access area compartment.

The analysis for the maintenance floor and operating deck compartments are performed assuming a one square foot rupture of a main steam line pipe. This break envelopes the branch lines that could be postulated to rupture in these areas. The break is assumed to occur between the 107-foot elevation and the 135-foot elevation of the maintenance floor compartment and between the 135-foot elevation and the 282-foot elevation of the operating deck region.

The analysis for the main chemical and volume control system room is performed assuming a single-ended guillotine break in a 3-inch diameter reactor coolant system cold-leg pipe. This break envelopes the branch lines that could be postulated to rupture in this area. The break is assumed to occur between the 91-foot elevation and the 105-foot elevation of the chemical and volume control system room compartment.

The analysis for the pipe tunnel in the chemical and volume control system room is performed assuming a double-ended guillotine break in a 4-inch diameter steam generator blowdown line. This double-ended break envelopes the branch lines that could be postulated to rupture in this area. The break is assumed to occur between the 98.5-foot elevation and the 105-foot elevation of the chemical and volume control system room pipe tunnel.

An evaluation of rooms which could have either a main or startup feedwater line break was performed. No significant pressurization of the regions is predicted to occur because the postulated breaks are located in regions which are open to the large free volume of containment. For these regions, the main or startup feedwater line breaks are not limiting.

6.2.1.2.3.3 Node Selection

The nodalization for the sub-compartments is analyzed in sufficient detail such that nodal boundaries are at the location of flow obstructions or geometrical changes within the subcompartment. These discontinuities create pressure differentials between adjoining nodes. There are no significant discontinuities within each node, and hence the pressure gradient is negligible within any node.

6.2.1.2.3.4 Vent Flowpath Flow Conditions

The flow characteristics for each of the subcompartments are such that, at no time during the transient does critical flow exist through vent paths.

6.2.1.3 Mass and Energy Release Analyses for Postulated Pipe Ruptures

Mass and Energy releases are documented in this section for two different types of transients.

The first section describes the methodology used to calculate the releases for the subcompartment differential pressure analysis using the TMD code (referred to as the short term analysis). These releases are used for the subcompartment response in Subsection 6.2.1.2.

The second section describes the methodology used to determine the releases for the containment pressure and temperature calculations using the WGOTHIC code (Reference 20) (referred to as the long term analysis). These releases are used for the containment integrity analysis in Subsection 6.2.1.1.

The short term analysis considers only the initial stages of the blowdown transient, and takes into consideration the application of LBB methodology. LBB is discussed in Subsection 3.6.3. Since LBB is applicable to reactor coolant system piping that is 6 inches in diameter and greater, the mass and energy release analysis for sub-compartments postulates the complete DEG severance of 3-inch and 4-inch pipe. The mass and energy release postulated for a ruptured steam line is for a one square foot break.

Conversely, the limiting break size for containment integrity analysis considers as its LOCA design basis the complete DEG severance of the largest reactor coolant system pipe.

The containment system receives mass and energy releases following a postulated rupture of the reactor coolant system. The release rates are calculated for pipe failure at two locations: the hot leg and the cold leg. These break locations are analyzed for both the short-term and the long-term transients. Because the initial operating pressure of the reactor coolant system is approximately 2250 psi, the mass and energy are released extremely rapidly when the break occurs. As the water exits from the broken pipe, a portion of it flashes to steam because of the differences in pressure and temperature between the reactor coolant system and containment. The reactor coolant system depressurizes rapidly since break flow exits from both sides of the pipe in a DEG severance.

6.2.1.3.1 Short Term Mass and Energy Release Data

The AP1000 short term LOCA mass and energy releases are predicted for the first ten seconds of the blowdown from a postulated DEG break of the largest non-LBB high energy line in each compartment. The density of the fluid released from a postulated pipe rupture has a direct effect on the magnitude of the differential pressures that results across subcompartment walls. A DEG rupture that is postulated in the cold leg piping is typically the most limiting scenario. This analysis provides mass and energy releases for a 3-inch DEG rupture in the cold leg and in the hot leg.

The modified Zaloudek correlation (Reference 3) is used to calculate the critical mass flux from a 3-inch double-ended cold leg guillotine (DECLG) break and a 3-inch double-ended hot leg guillotine (DEHLG) break. This maximum mass flux is conservatively assumed to remain constant at the initial AP1000 full power steady state conditions and the enthalpy is varied to determine the energy release rates. Conservative enthalpies are obtained from the SATAN-VI blowdown transients for ruptures of the largest reactor coolant system cold leg and hot leg piping in the AP1000 design. This assumption maximizes the mass released, which is conservative for the subcompartment analysis.

The mass release for the 4-inch pressurizer spray line break is determined with the Fauske break flow model in NOTRUMP. The steam generator blowdown releases for a 4-inch line are calculated with the critical mass flux method.

The initial conditions and inputs to the modified Zaloudek correlation used for the AP1000 LOCA mass and energy releases are given in Table 6.2.1.3-1. The temperature parameters that are used for the hot leg and cold leg are conservative compared to the actual plant performance parameters. The short term LOCA mass and energy releases are affected by the initial density of the fluid. A lower density yields a more conservative maximum compartment differential pressure.

The short term LOCA double-ended guillotine mass and energy release data is provided in Tables 6.2.1.3-2 and 6.2.1.3-3 for the cold and hot legs, respectively. The short-term non-LOCA mass and energy release data are provided in Table 6.2.1.3-5. The pressurizer spray line mass and energy releases are shown in Table 6.2.1.3-6. The short term LOCA single-ended mass and energy release data are provided in Table 6.2.1.3-7.

6.2.1.3.2 Long Term Mass and Energy Release Data

A long term LOCA analysis calculational model is typically divided into four phases: blowdown, which includes the period from the accident initiation (when the reactor is in a steady-state full power operation condition) to the time that the broken loop pressure equalizes to the containment pressure; refill, which is the time from the end of the blowdown to the time when the passive core cooling system (PXS) refills the vessel lower plenum; reflood, which begins when the water starts to flood the core and continues until the core is completely quenched; and post-reflood, which is the period after the core has been quenched and energy is released to the reactor coolant system primary system by the reactor coolant system metal, core decay heat, and the steam generators.

The long-term analysis considers the blowdown, reflood, and post-reflood phases of the transient. The refill period is conservatively neglected so that the releases to the containment are conservatively maximized.

The AP1000 long-term LOCA mass and energy releases are predicted for the blowdown phase for postulated DECLG and DEHLG breaks. The blowdown phase mass and energy releases are calculated using the NRC approved SATAN-VI computer code (Reference 4). The post blowdown phase mass and energy releases are calculated considering the energy released from the available energy sources described below. The energy release rates are conservatively modeled so that the energy is released quickly. The higher release rates result in a conservative containment pressure calculation. The releases are provided in Tables 6.2.1.3-9 and 6.2.1.3-10.

6.2.1.3.2.1 Mass and Energy Sources

The following are accounted for in the long-term LOCA mass and energy calculation:

- Decay heat
- Core stored energy
- Reactor coolant system fluid and metal energy
- Steam Generator fluid and metal energy
- Accumulators core make-up tanks (CMTs), and the in-containment refueling water storage tank (IRWST)
- Zirconium-water reaction

The methods and assumptions used to release the various energy sources during the blowdown phase are given in Reference 4.

The following parameters are used to conservatively analyze the energy release for maximum containment pressure (calorimetric uncertainty calculation will be provided per Subsection 15.0.15.1):

- Maximum expected operating temperature
- Allowance in temperature for instrument error and dead band
- Margin in volume (+1.4 percent)
- Allowance in volume for thermal expansion (+1.6 percent)

- 100 percent full power operation
- Allowance for calorimetric error (+1.0 percent of full power)
- Conservatively modified coefficients of heat transfer
- Allowance in core stored energy for effect of fuel densification
- Margin in core stored energy (+15.0 percent)
- Allowance in pressure for instrument error and dead band
- Margin in steam generator mass inventory (+10.0 percent)
- One percent of the Zirconium surrounding the fuel is assumed to react

6.2.1.3.2.2 Description of Blowdown Model

A description of the SATAN-VI model that is used to determine the mass and energy released from the reactor coolant system during the blowdown phase of a postulated LOCA is provided in Reference 4. Significant correlations are discussed in this reference.

6.2.1.3.2.3 Description of Post-Blowdown Model

The remaining reactor coolant system and SG mass and energy inventories at the end of blowdown are used to define the initial conditions for the beginning of the reflood portion of the transient. The broken and unbroken loop SG inventories are kept separate to account for potential differences in the cooldown rate between the loops. In addition, the mass added to the reactor coolant system from the IRWST is returned to containment as break flow so that no net change in system mass occurs.

Energy addition due to decay heat is computed using the 1979 ANS standard (plus 2 sigma) decay heat table from Reference 4. The energy release rates from the reactor coolant system metal and steam generators are modelled using exponential decay rates. This modelling is consistent with analyses for current generation design analyses that are performed with the models described in Reference 4.

The accumulator, CMT, and IRWST mass flow rates are computed from the end of blowdown to the time the tanks empty. The rate of reactor coolant system mass accumulation is assumed to decrease exponentially during the reflood phase. More CMT and accumulator flow is spilled from the break as the system refills. The break flow rate is determined by subtracting the reactor coolant system mass addition rate from the sum of the accumulator, CMT and IRWST flow rates.

Mass which is added to, and which remains in, the vessel is assumed to be raised to saturation. Therefore, the actual amount of energy available for release to the containment for a given time period is determined from the difference between the energy required to raise the temperature of the incoming flow to saturation and the sum of the decay heat, core stored energy, reactor coolant system metal energy and SG mass and metal energy release rates. The energy release rate for the available break flow is determined from a comparison of the total energy available release rate and the energy release rate assuming that the break flow is 100-percent saturated steam. Saturated steam releases maximize the calculated containment pressurization.

6.2.1.3.2.4 Single Failure Analysis

The assumptions for the containment mass and energy release analysis are intended to maximize the calculated release. A single failure could reduce the flow rate of water to the RCS, but would not disable the passive core cooling function. For example, if one of the two parallel valves from the CMT were to fail to open, the injection flow rate would be reduced and, as a result, the break mass release rate would decrease. Therefore, to maximize the releases, the AP1000 mass and energy release calculations conservatively do not assume a single failure. The effects of a single failure are taken into account in the containment analysis of Subsection 6.2.1.1.

6.2.1.3.2.5 Metal-Water Reaction

Consistent with 10 CFR 50, Appendix K criteria, the energy release associated with the zirconium-water exothermic reaction has been considered. The LOCA peak cladding temperature analysis, presented in Chapter 15, that demonstrates compliance with the Appendix K criteria demonstrates that no appreciable level of zirconium oxidation occurs. This level of reaction has been bounded in the containment mass and energy release analysis by incorporating the heat of reaction from 1 percent of the zirconium surrounding the fuel. This exceeds the level predicted by the LOCA analysis and results in additional conservatism in the mass and energy release calculations.

6.2.1.3.2.6 Energy Inventories

Inventories of the amount of mass and energy released to containment during a postulated LOCA are provided in summary Tables 6.2.1.3-2 through 6.2.1.3-7.

6.2.1.3.2.7 Additional Information Required for Confirmatory Analysis

System parameters and hydraulic characteristics needed to perform confirmatory analysis are provided in Table 6.2.1.3-8 and Figures 6.2.1.3-1 through 6.2.1.3-4.

6.2.1.4 Mass and Energy Release Analysis for Postulated Secondary-System Pipe Rupture Inside Containment

Steam line ruptures occurring inside a reactor containment structure may result in significant releases of high-energy fluid to the containment environment, possibly resulting in high containment temperatures and pressures. The quantitative nature of the releases following a steam line rupture is dependent upon the configuration of the plant steam system, the containment design as well as the plant operating conditions and the size of the rupture. This section describes the methods used in determining the containment responses to a variety of postulated pipe breaks encompassing variations in plant operation.

6.2.1.4.1 Significant Parameters Affecting Steam Line Break Mass and Energy Releases

Four major factors influence the release of mass and energy following a steam line break: steam generator fluid inventory, primary-to-secondary heat transfer, protective system operation and the state of the secondary fluid blowdown. The following is a list of those plant variables which have significant influence on the mass and energy releases:

- Plant power level
- Main feedwater system design
- Startup feedwater system design

- Postulated break type, size, and location
- Availability of offsite power
- Safety system failures
- Steam generator reverse heat transfer and reactor coolant system metal heat capacity.

The following is a discussion of each of these variables.

6.2.1.4.1.1 Plant Power Level

Steam line breaks are postulated to occur with the plant in any operating condition ranging from hot shutdown to full power. Since steam generator mass decreases with increasing power level, breaks occurring at lower power generally result in a greater total mass release to the containment. Because of increased energy storage in the primary plant, increased heat transfer in the steam generators and additional energy generation in the nuclear fuel, the energy released to the containment from breaks postulated to occur during power operation may be greater than for breaks occurring with the plant in a hot shutdown condition. Additionally, steam pressure and the dynamic conditions in the steam generators change with increasing power. They have significant influence on the rate of blowdown from the break following a steam break event.

Because of the opposing effects of changing power level on steam line break releases, no single power level can be pre-defined as a worst case initial condition for a steam line break event. Therefore, several different power levels (101%, 70%, 30%, 0%) spanning the operating range as well as the hot shutdown condition are analyzed.

6.2.1.4.1.2 Main Feedwater System Design

The rapid depressurization that occurs following a rupture may result in large amounts of water being added to the steam generators through the main feedwater system. Rapid closing isolation valves are provided in the main feedwater lines to limit this effect. The piping layout downstream of the isolation valves determine the volume in the feedwater lines that cannot be isolated from the steam generators. As the steam generator pressure decreases, some of the fluid in this volume will flash into the steam generator, providing additional secondary fluid that may exit out the rupture. This unisolated feedwater mass between the steam generator and isolation valve is accounted for within the results in Subsection 6.2.1.4.3.2. The assumed unisolable volume bounds the volume to either the feedwater control valve or the feedwater isolation valve on the faulted loop, so that no additional feedwater mass could be postulated due to a single failure of one of the valves.

The feedwater addition that occurs prior to closing of the feedwater line isolation valves is conservatively calculated based on the depressurization of the faulted steam generator, and assuming that the feedwater control valve is fully open in response to the increased steam flow rate.

6.2.1.4.1.3 Startup Feedwater System Design

Within the first minute following a steam line break, the startup feedwater system may be initiated on any one of several protection system signals. The addition of startup feedwater to the steam generators increases the secondary mass available for release to the containment, as well as the heat transferred to the secondary fluid. The effects on the steam generator mass are maximized in the calculation described in Subsection 6.2.1.4.3.2 by assuming full startup feedwater flow to the faulted steam generator starting at time zero from the safeguard system(s) signal and continuing until automatically terminated on a low RCS Tcold signal.

6.2.1.4.1.4 Postulated Break Type, Size and Location

The steam line break is postulated as a full double-ended pipe rupture immediately downstream of the integral flow restrictor on the faulted steam generator. The forward break flow from the faulted steam generator is controlled by the flow restrictor area (1.4 ft^2). The reverse break flow is based on the cross-sectional area of the steam line (6.68 ft^2). After the initial steam in the steam line is released, the reverse break flow becomes controlled by the area of the flow restrictor (1.4 ft^2) on the intact steam generator. The faulted steam generator is unisolable from the break location, and the forward break flow continues until the steam generator is empty. The reverse break flow continues until main steam line isolation valve (MSIV) closure. The modeling of the reverse break flow does not differentiate the location of the MSIVs, and all steam that has exited the intact steam generator prior to MSIV closure is assumed to be released out the break. This bounds the possible effects of an MSIV failed open.

No liquid entrainment is credited in the break effluent from the double-ended pipe rupture. The release of dry saturated steam from the largest possible break size maximizes the mass and energy release to the containment.

6.2.1.4.1.5 Availability of Offsite Power

The effects of the assumption of the availability of offsite power are enveloped in the analysis.

Offsite power is assumed to be available where it maximizes the mass and energy released from the break because of the following:

- The continued operation of the reactor coolant pumps until automatically tripped as a result of core makeup tank (CMT) actuation. This maximizes the energy transferred from the reactor coolant system to the steam generator.

- The continued operation of the feedwater pumps and actuation of the startup feedwater system until they are automatically terminated. This maximizes the steam generator inventories available for release.

- The AP1000 is equipped with the passive safeguards system including the CMT and the passive residual heat removal (PRHR) heat exchanger. Following a steam line rupture, these passive systems are actuated when their setpoints are reached. This decreases the primary coolant temperatures. The actuation and operation of these passive safeguards systems do not require the availability of offsite power.

  When the PRHR is in operation, the core-generated heat is dissipated to the in-containment refueling water storage tank (IRWST) via the PRHR heat exchanger. This causes a reduction of the heat transfer from the primary system to the steam generator secondary system and causes a reduction of mass and energy releases via the break.

Thus, the availability of ac power in conjunction with the passive safeguards system (CMT and PRHR) maximizes the mass and energy releases via the break. Therefore, blowdown occurring in conjunction with the availability of offsite power is more severe than cases where offsite power is not available.

6.2.1.4.1.6 Safety System Failures

The calculation of the mass and energy release following a steam line rupture is done to conservatively bound the possible increase of mass release due to safety system failures. Two failures, which are bounded are:

- Failure of one main steam isolation valve, as discussed in Subsection 6.2.1.4.1.4
- Failure of one main feedwater isolation valve, as discussed in Subsection 6.2.1.4.1.2

6.2.1.4.1.7 Steam Generator Reverse Heat Transfer and Reactor Coolant System Metal Heat Capacity

Once steam line isolation is complete, the steam generator in the intact steam loop becomes a source of energy that can be transferred to the steam generator with the broken line. This energy transfer occurs through the primary coolant. As the primary plant cools, the temperature of the coolant flowing in the steam generator tubes drops below the temperature of the secondary fluid in the intact unit, resulting in energy being returned to the primary coolant. This energy is then available to be transferred to the steam generator with the broken steam line.

Similarly, the heat stored in the metal of the reactor coolant piping, the reactor vessel, and the reactor coolant pumps is transferred to the primary coolant as the plant cooldown progresses. This energy also is available to be transferred to the steam generator with the broken line.

The effects of both the reactor coolant system metal and the reverse steam generator heat transfer are included in the results presented.

6.2.1.4.2 Description of Blowdown Model

The steam line blowdown is calculated with the AP1000 version of LOFTRAN (References 31 and 32). This is a version of LOFTRAN (Reference 6) which has been modified to include simulation of the AP1000 passive residual heat removal heat exchanger, core makeup tanks, and associated protection and safety monitoring system actuation logic. Documentation of the code changes for the passive models is provided in Reference 31. The methodology for the steam line break analysis is based on Reference 5. The applicability of the LOFTRAN code to AP1000, and the applicability of the methodology used to analyze the steam line break blowdown are discussed in Reference 32.

6.2.1.4.3 Containment Response Analysis

The WGOTHIC Computer Code (Reference 20) is used to determine the containment responses following the steam line break, which is documented in Reference 36. The containment response analysis is described in Subsection 6.2.1.1.

6.2.1.4.3.1 Initial Conditions

The initial containment conditions are discussed in Subsection 6.2.1.1.3.

6.2.1.4.3.2 Mass and Energy Release Data

Using References 5, 6, 31 and 32 as a basis, mass and energy release data are developed to determine the containment pressure-temperature response for the spectrum of breaks analyzed. Table 6.2.1.4-2 provides the mass and energy release data for the cases that produce the highest containment pressure and temperature in the containment response analysis. Table 6.2.1.4-4 provides nominal plant data used in the mass and energy releases determination.

6.2.1.4.3.3 Containment Pressure-Temperature Results

The results of the containment pressure-temperature analyses for the postulated secondary system pipe ruptures that produce the highest peak containment pressure and temperature are presented in Subsection 6.2.1.1.3.

6.2.1.5 Minimum Containment Pressure Analysis for Performance Capability Studies of Emergency Core Cooling System (PWR)

The containment backpressure used for the AP1000 cold leg guillotine and split breaks for the emergency core cooling system (ECCS) analysis presented in Subsection 15.6.5 is described. The minimum containment backpressure for emergency core cooling system performance during a loss-of-coolant accident is computed using the WGOTHIC computer code. Subsection 6.2.1.1 demonstrates that the AP1000 containment pressurizes during large break LOCA events. An analysis is performed to establish a containment pressure boundary condition applied to the WCOBRA/TRAC code (Reference 8). A single-node containment model is used to assess containment pressure response. Containment internal heat sinks used heat transfer correlations of 4 times Tagami during the blowdown phase followed by 1.2 times Uchida for the post-blowdown phase. The calculated containment backpressure is provided in Figure 6.2.1.5-1. Results of the WCOBRA/TRAC analyses demonstrate that the AP1000 meets 10 CFR 50.46 requirements (Reference 7).

6.2.1.5.1 Mass and Energy Release Data

The mass and energy releases to the containment during the blowdown portion only of the double-ended cold-leg guillotine break (DECLG) transient are presented in Table 6.2.1.5-1, as computed by the WCOBRA/TRAC code.

The mathematical models which calculate the mass and energy releases to the containment are described in Subsection 15.6.5. A break spectrum analysis is performed (see references in Subsection 15.6.5) that considers various break sizes and Moody discharge coefficients for the double-ended cold leg guillotines and splits. Mixing of steam and accumulator water injected into the vessel reduces the available energy released to the containment vapor space, thereby minimizing calculated containment pressure. Note that the mass/energy releases during the reflood phase of the subject break are not considered. This produces a conservatively low containment pressure result for use as a boundary condition in the WCOBRA/TRAC large break LOCA analysis.

6.2.1.5.2 Initial Containment Internal Conditions

Initial containment conditions were biased for the emergency core cooling system backpressure analysis to predict a conservatively low containment backpressure. Initial containment conditions include an initial pressure of 14.7 psia, initial containment temperature of 90°F, and a relative humidity of 99 percent. An air annulus temperature of 0°F is assumed. The initial through-thickness metal temperature of the containment shell is assumed to also be 0°F.

6.2.1.5.3 Other Parameters

Containment parameters, such as containment volume and passive heat sinks, are biased to predict a conservative low containment backpressure. The containment volume used in the calculation is conservatively set to 1.1 times the free volume of the AP1000 containment Evaluation Model. Passive heat sink surface areas were increased by a factor of 2.1 times the values presented in Reference 20. Material properties were biased high (density, conductivity, and heat capacity) as indicated in CSB 6-1 (Reference 8). No air gap was modeled between the steel liner and base concrete of jacketed concrete heat sinks. The outside surface of the containment shell was maintained at 0°F throughout the calculation. To further minimize containment pressure, containment purge was assumed to be in operation at time zero and air is vented through both the 15-inch diameter (16-inch, Sch. 40 piping) containment purge supply and exhaust lines until the isolation valves have fully closed. These valves were modeled to close 12 seconds after the 8 psig closure setpoint was reached.

6.2.1.6 Testing and Inspection

This section describes the functional testing of the containment vessel. Testing and in-service inspection of the containment vessel are described in Subsection 3.8.2.6. Isolation testing and leak testing are described in Subsection 6.2.5. Testing and inspection are consistent with regulatory requirements and guidelines.

The valves of the passive containment cooling system are stroke tested periodically. Subsection 6.2.2 provides a description of testing and inspection.

The baffle between the containment vessel and the shield building is equipped with removable panels and clear observation panels to allow for inspection of the containment surface. See Subsection 3.8.2 for the requirements for in-service inspection of the steel containment vessel. Subsection 6.2.2 provides a description of testing and inspection to be performed.

Testing is not required on any subcompartment vent or on the collection of condensation from the containment shell. The collection of condensate from the containment shell and its use in leakage detection are discussed in Subsection 5.2.5.

6.2.1.7 Instrumentation Requirements

Instrumentation is provided to monitor the conditions inside the containment and to actuate the appropriate engineered safety features, should those conditions exceed the predetermined levels. The instruments measure the containment pressure, containment atmosphere radioactivity, and containment hydrogen concentration. Instrumentation to monitor reactor coolant system leakage into containment is described in Subsection 5.2.5.

The containment pressure is measured by four independent pressure transmitters. The signals are fed into the engineered safety features actuation system, as described in Subsection 7.3.1. Upon detection of high pressure inside the containment, the appropriate safety actuation signals are generated to actuate the necessary safety-related systems. Low pressure is alarmed but does not actuate the safety-related systems.

The physically separated pressure transmitters are located outside the containment. Section 7.3 provides a description.

The containment atmosphere radiation level is monitored by four independent area monitors located above the operating deck inside the containment building. The measurements are continuously fed into the engineered safety features actuation system logic. Section 11.5 provides information on the containment area radiation monitors. The engineered safety features actuation system operation is described in Section 7.3.

The containment hydrogen concentration is measured by hydrogen monitors, as described in Subsection 6.2.4. Hydrogen concentrations are monitored by three sensors distributed throughout containment to provide a representative indication of bulk containment hydrogen concentration.

These indications are used by the plant operators to monitor hydrogen concentrations. High hydrogen concentration is alarmed in the main control room.

6.2.2 Passive Containment Cooling System

The passive containment cooling system (PCS) is an engineered safety features system. Its functional objective is to reduce the containment temperature and pressure following a loss of coolant accident (LOCA) or main steam line break (MSLB) accident inside the containment by

removing thermal energy from the containment atmosphere. The passive containment cooling system also serves as the means of transferring heat to the safety-related ultimate heat sink for other events resulting in a significant increase in containment pressure and temperature.

The passive containment cooling system limits releases of radioactivity (post-accident) by reducing the pressure differential between the containment atmosphere and the external environment, thereby diminishing the driving force for leakage of fission products from the containment to the atmosphere. This subsection describes the safety design bases of the safety-related containment cooling function. Nonsafety-related containment cooling, a function of the containment recirculation cooling system, is described in Subsection 9.4.6.

The passive containment cooling system also provides a source of makeup water to the spent fuel pool in the event of a prolonged loss of normal spent fuel pool cooling.

6.2.2.1 Safety Design Basis

- The passive containment cooling system is designed to withstand the effects of natural phenomena such as ambient temperature extremes, earthquakes, winds, tornadoes, or floods.
- Passive containment cooling system operation is automatically initiated upon receipt of a Hi-2 containment pressure signal.
- The passive containment cooling system is designed so that a single failure of an active component, assuming loss of offsite or onsite ac power sources, will not impair the capability of the system to perform its safety-related function.
- Active components of the passive containment cooling system are capable of being tested during plant operation. Provisions are made for inspection of major components in accordance with the intervals specified in the ASME Code, Section XI.
- The passive containment cooling system components required to mitigate the consequences of an accident are designed to remain functional in the accident environment and to withstand the dynamic effects of the accident.
- The passive containment cooling system is capable of removing sufficient thermal energy including subsequent decay heat from the containment atmosphere following a design basis event resulting in containment pressurization such that the containment pressure remains below the design value with no operator action required for 72 hours.
- The passive containment cooling system is designed and fabricated to appropriate codes consistent with Regulatory Guides 1.26 and 1.32 and in accordance with Regulatory Guide 1.29 as described in Section 1.9.

6.2.2.2 System Design

6.2.2.2.1 General Description

The passive containment cooling system and components are designed to the codes and standards identified in Section 3.2; flood design is described in Section 3.4; missile protection is described in Section 3.5. Protection against dynamic effects associated with the postulated rupture of piping is described in Section 3.6. Seismic and environmental design and equipment qualification are described in Sections 3.10 and 3.11. The actuation system is described in Section 7.3.

6.2.2.2.2 System Description

The passive containment cooling system is a safety-related system which is capable of transferring heat directly from the steel containment vessel to the environment. This transfer of heat prevents the containment from exceeding the design pressure and temperature following a postulated design basis accident, as identified in Chapters 6 and 15. The passive containment cooling system makes use of the steel containment vessel and the concrete shield building surrounding the containment. The major components of the passive containment cooling system are: the passive containment cooling water storage tank (PCCWST) which is incorporated into the shield building structure above the containment; an air baffle, located between the steel containment vessel and the concrete shield building, which defines the cooling air flowpath; air inlets and an air exhaust, also incorporated into the shield building structure; and a water distribution system, mounted on the outside surface of the steel containment vessel, which functions to distribute water flow on the containment. A passive containment cooling ancillary water storage tank and two recirculation pumps are provided for onsite storage of additional passive containment cooling system cooling water, to transfer the inventory to the passive containment cooling water storage tank, and to provide a back-up supply to the fire protection system (FPS) seismic standpipe system as discussed in Subsection 9.5.1.

A normally isolated, manually-opened flow path is available between the passive containment cooling system water storage tank and the spent fuel pool.

A recirculation path is provided to control the passive containment cooling water storage tank water chemistry and to provide heating for freeze protection. Passive containment cooling water storage tank filling operations and normal makeup needs are provided by the demineralized water transfer and storage system discussed in Subsection 9.2.4.

The system piping and instrumentation diagram is shown in Figure 6.2.2-1. System parameters are shown in Table 6.2.2-1. A simplified system sketch is included as Figure 6.2.2-2.

6.2.2.2.3 Component Description

The mechanical components of the passive containment cooling system are described in this subsection. Table 6.2.2-2 provides the component design parameters.

Passive Containment Cooling Water Storage Tank – The passive containment cooling water storage tank is incorporated into the shield building structure above the containment vessel. The inside wetted walls of the tank are lined with stainless steel plate. It is filled with demineralized water and has the minimum required useable volume for the passive containment cooling function as defined in Table 6.2.2-2. The passive containment cooling system functions as the safety-related ultimate heat sink. The passive containment cooling water storage tank is seismically designed and missile protected.

The surrounding reinforced concrete supporting structure is designed to ACI 349 as described in Subsection 3.8.4.3. The welded seams of the plates forming part of the leak tight boundary are examined by liquid penetrant after fabrication to confirm that the boundary does not leak.

The tank also has redundant level measurement channels and alarms for monitoring the tank water level and redundant temperature measurement channels to monitor and alarm for potential freezing. To maintain system operability, a recirculation loop that provides chemistry and temperature control is connected to the tank.

The tank is constructed to provide sufficient thermal inertia and insulation such that draindown can be accomplished without heater operation.

In addition to its containment heat removal function, the passive containment cooling water storage tank also serves as a source of makeup water to the spent fuel pool and a seismic Category I water storage reservoir for fire protection following a safe shutdown earthquake.

The PCCWST suction pipe for the fire protection system is configured so that actuation of the fire protection system will not infringe on the usable capacity allocated to the passive containment cooling function as defined in Table 6.2.2-2.

Passive Containment Cooling Water Storage Tank Isolation Valves – The passive containment cooling system water storage tank outlet piping is equipped with three sets of redundant isolation valves. In two sets, air-operated butterfly valves are normally closed and open upon receipt of a Hi-2 containment pressure signal. These valves fail-open, providing a fail-safe position, on the loss of air or loss of 1E dc power. In series with these valves are normally-open motor-operated gate valves located upstream of the butterfly valves. They are provided to allow for testing or maintenance of the butterfly valves. A third set of motor-operated gate valves is provided. One valve is normally closed, and the other is normally open. Based on PRA insights, diversity requirements are adopted for these valves to minimize the consequences of common-mode failure of motor-operated valves to cause a loss of containment cooling in multiple failure scenarios.

The storage tank isolation valves, along with the passive containment cooling water storage tank discharge piping and associated instrumentation between the passive containment cooling water storage tank and the downstream side of the isolation valves, are contained within a temperature-controlled valve room to prevent freezing. Valve room heating is provided to maintain the room temperature above 50°F.

Flow Control Orifices – Orifices are installed in each of the four passive containment cooling water storage tank outlet pipes. They are used, along with the different elevations of the outlet pipes, to control the flow of water from the passive containment cooling water storage tank as a function of water level. The orifices are located within the temperature-controlled valve room.

Water Distribution Bucket – A water distribution bucket is provided to deliver water to the outer surface of the containment dome. The redundant passive containment cooling water delivery pipes and auxiliary water source piping discharge into the bucket, below its operational water level, to prevent excessive splashing. A set of circumferentially spaced distribution slots are included around the top of the bucket. The bucket is hung from the shield building roof and suspended just above the containment dome for optimum water delivery. The structural requirements for safety-related structural steel identified in Subsection 3.8.4 apply to the water distribution bucket. ANSI/ASCE-8-90 (Reference 24) is used for design and analysis of stainless steel cold formed parts. The water distribution bucket is fabricated from one or more of the materials included in Table 3.8.4-6, ASTM-A240 austenitic stainless steel, or ASTM-A276 austenitic stainless steel.

Water Distribution Weir System – A weir-type water delivery system is provided to optimize the wetted coverage of the containment shell during passive containment cooling system operation. The water delivered to the center of the containment dome by the water distribution bucket flows over the containment dome, being distributed evenly by slots in the distribution bucket. Vertical divider plates are attached to the containment dome and originate at the distribution bucket extending radially along the surface of the dome to the first distribution weir. The divider plates limit maldistribution of flow which might otherwise occur due to variations in the slope of the containment dome. At the first distribution weir set, the water in that sector is collected and then redistributed onto the containment utilizing channeling walls and collection troughs equipped with distribution weirs. A second set of weirs are installed on the containment dome at a greater radius to again collect and then redistribute the cooling water to enhance shell coverage. The system includes channeling walls and collection troughs, equipped with distribution weirs. The distribution system is capable of functioning during extreme low- or high-ambient temperature conditions. The structural requirements for safety-related

structural steel and cold formed steel structures identified in Subsection 3.8.4 apply to the water distribution weir system. ANSI/ASCE-8-90, (Reference 24) is used for design and analysis of stainless steel cold formed parts. The water distribution weir system is fabricated from one or more of the materials included in Table 3.8.4-6, ASTM-A240 austenitic stainless steel, or ASTM-A276 austenitic stainless steel.

Air Flow Path – An air flow path is provided to direct air along the outside of the containment shell to provide containment cooling. The air flow path includes a screened shield building inlet, an air baffle that divides the outer and inner flow annuli, and a chimney to increase buoyancy. Subsection 3.8.4.1.3 includes information regarding the air baffle. The general arrangement drawings provided in Section 1.2 provide layout information of the air flow path.

Passive Containment Cooling Ancillary Water Storage Tank – The passive containment cooling ancillary water storage tank is a cylindrical steel tank located at ground level near the auxiliary building. It is filled with demineralized water and has a useable volume of greater than required for makeup to the passive containment cooling water storage tank and the spent fuel pool as defined in Table 6.2.2-2. The tank is analyzed, designed and constructed using the method and criteria for Seismic Category II building structures defined in Subsections 3.2.1 and 3.7.2. The tank is designed and analyzed for Category 5 hurricanes including the effects of sustained winds, maximum gusts, and associated wind-borne missiles.

The tank has a level measurement, an alarm for monitoring the tank water level and a temperature measurement channel to monitor and alarm for potential freezing. To maintain system operability, an internal heater, controlled by the temperature instrument, is provided to maintain water contents above freezing. Chemistry can be adjusted by passive containment cooling water storage tank recirculation loop.

The tank is insulated to assure sufficient thermal inertia of the contents is available to prevent freezing for 7 days without heater operation. The transfer piping is maintained dry also to preclude freezing.

Chemical Addition Tank – The chemical addition tank is a small, vertical, cylindrical tank that is sized to inject a solution of hydrogen peroxide to maintain a passive containment cooling water storage tank concentration for control of algae growth.

Recirculation Pumps – Each recirculation pump is a 100 percent capacity centrifugal pump with wetted components made of austenitic stainless steel. The pump is sized to recirculate the entire volume of PCCWST water once every week. Each pump is capable of providing makeup flow to both the PCCWST and the spent fuel pool simultaneously. Both pumps are operated in parallel to meet fire protection system requirements.

Recirculation Heater – The recirculation heater is provided for freeze protection. The heater is sized based on heat losses from the passive containment cooling water storage tank and recirculation piping at the minimum site temperature, as defined in Section 2.3.

6.2.2.2.4 System Operation

Operation of the passive containment cooling system is initiated upon receipt of two out of four Hi-2 containment pressure signals. Manual actuation by the operator is also possible from either the main control room or remote shutdown workstation. System actuation consists of opening the passive containment cooling water storage tank isolation valves. This allows the passive containment cooling water storage tank water to be delivered to the top, external surface of the steel containment shell. The flow of water, provided entirely by the force of gravity, forms a water film over the dome and side walls of the containment structure.

The flow of water to the containment outer surface is initially established for short-term containment cooling following a design basis loss of coolant accident. The flow rate is reduced over a period of not less than 72 hours. This flow provides the desired reduction in containment pressure over time and removes decay heat. The flow rate change is dependent only upon the decreasing water level in the passive containment cooling water storage tank. Prior to 72 hours after the event, operator actions are taken to align the passive containment ancillary water storage tank to the suction of the passive containment cooling system recirculation pumps to replenish the cooling water supply to the passive containment cooling water storage tank. Sufficient inventory is available within the passive containment cooling ancillary water storage tank to maintain the minimum flow rate for an additional 4 days. The passive containment cooling system performance parameters are identified in Table 6.2.2-1.

To adequately wet the containment surface, the water is delivered to the distribution bucket above the center of the containment dome which subsequently delivers the water to the containment surface. A weir-type water distribution system is used on the dome surface to distribute the water for effective wetting of the dome and vertical sides of the containment shell. The weir system contains radial arms and weirs located considering the effects of tolerances of the containment vessel design and construction. A corrosion-resistant paint or coating for the containment vessel is specified to enhance surface wetability and film formation.

The cooling water not evaporated from the vessel wall flows down to the bottom of the inner containment annulus into annulus drains. The redundant annulus drains route the excess water out of the upper annulus. The annulus drains are located in the shield building wall slightly above the floor level to minimize the potential for clogging of the drains by debris. The drains are horizontal or have a slight slope to promote drainage. The drains are always open (without isolation valves) and each is sized to accept maximum passive containment cooling system flow. The outside ends of the drains are located above catch basins or other storm drain collectors.

A path for the natural circulation of air upward along the outside walls of the containment structure is always open. The natural circulation air flow path begins at the shield building inlet, where atmospheric air is turned upward from the horizontal by louvers in the concrete structure. Air flows past the set of fixed louvers and is forced to turn downward into an outer annulus. This outer shield building annulus is encompassed by the concrete shield building on the outside and a removable baffle on the inside. At the bottom of the baffle wall, curved vanes aid in turning the flow upward 180 degrees into the inner containment annulus. This inner annulus is encompassed by the baffle wall on the outside and the steel containment vessel on the inside. Air flows up through the inner annulus to the top of the containment vessel and then exhausts through the shield building chimney.

As the containment structure heats up in response to high containment temperature, heat is removed from within the containment via conduction through the steel containment vessel, convection from the containment surface to the water film, convection and evaporation from the water film to the air, and radiation from the water film to the air baffle. As heat and water vapor are transferred to the air space between the containment structure and air baffle, the air becomes less dense than the air in the outer annulus. This density difference causes an increase in the natural circulation of the air upward between the containment structure and the air baffle, with the air finally exiting at the top center of the shield building.

The passive containment cooling water storage tank provides water for containment wetting for at least 72 hours following system actuation. Operator action can be taken to replenish this water supply from the passive containment cooling ancillary water storage tank or to provide an alternate water source directly to the containment shell through an installed safety-related seismic piping connection. In addition, water sources used for normal filling operations can be used to replenish the water supply.

The arrangement of the air inlet and air exhaust in the shield building structure has been selected so that wind effects aid the natural air circulation. The air inlets are placed at the top, outside of the shield building, providing a symmetrical air inlet that reduces the effect of wind speed and direction or adjacent structures. The air/water vapor exhaust structure is elevated above the air inlet to provide additional buoyancy and reduces the potential of exhaust air being drawn into the air inlet. The air flow inlet and chimney regions are both designed to protect against ice or snow buildup and to prevent foreign objects from entering the air flow path.

Inadvertent actuation of the passive containment cooling system is terminated through operator action by closing either of the series isolation valves from the main control room. Subsection 6.2.1.1.4 provides a discussion of the effects of inadvertent system actuation.

The passive containment cooling system provides for makeup water to the spent fuel pool to provide for continued spent fuel pool inventory and heat removal. The passive containment cooling water storage tank provides makeup to the spent fuel pool when the inventory is not required for passive containment cooling system operation. An installed long term makeup connection for the passive containment cooling system and the spent fuel pool is provided as a part of the passive containment cooling system. The passive containment cooling ancillary water storage tank and the passive containment cooling system recirculation pumps may also be utilized for makeup to the spent fuel pool.

The passive containment cooling system provides spray water to the spent fuel pool spray header. Use of the PCCWST to provide water to the spent fuel pool spray header is controlled by the Extensive Damage Mitigation Guidelines (EDMG) per NEI 06-12 (Reference 33).

6.2.2.3 Safety Evaluation

The safety-related portions of the passive containment cooling system are located within the shield building structure. This building (including the safety-related portions of the passive containment cooling system) is designed to withstand the effects of natural phenomena such as earthquakes, winds, tornadoes, or floods. Components of the passive containment cooling system are designed to withstand the effects of ambient temperature extremes.

The portions of the passive containment cooling system which provide for long term (post 72-hour) water supply for containment wetting are located in Seismic Category I or Seismic Category II structures excluding the passive containment ancillary water storage tank and associated valves located outside of the auxiliary building. The water storage tank and the anchorage for the associated valves are Seismic Category II. The features of these structures which protect this function are analyzed and designed for Category 5 hurricanes including the effects of sustained winds, maximum gusts, and associated wind-borne missiles.

Operation of the containment cooling system is initiated automatically following the receipt of a Hi-2 containment pressure signal. The use of this signal provides for system actuation during transients, resulting in mass and energy releases to containment, while avoiding unnecessary actuations. System actuation requires the opening of any of the three normally closed isolation valves, with no other actions required to initiate the post-accident heat removal function since the cooling air flow path is always open. Operation of the passive containment cooling system may also be initiated from the main control room and from the remote shutdown workstation. A description of the actuation system is contained in Section 7.3.

The active components of the passive containment cooling system, the isolation valves, are located in three redundant pipe lines. Failure of a component in one train does not affect the operability of the other mechanical train or the overall system performance. The fail-open, air-operated valves require no electrical power to move to their safe (open) position. The normally open motor-operated valves

are powered from separate redundant Class 1E dc power sources. Table 6.2.2-3 presents a failure modes and effects analysis of the passive containment cooling system.

Capability is provided to periodically test actuation of the passive containment cooling system. Active components can be tested periodically during plant operation to verify operability. The system can be inspected during unit shutdown. Additional information is contained in Subsections 3.9.6 and 6.2.2.4, as well as in the Technical Specifications.

There are four instrument lines that penetrate containment and are required to remain functional following an accident. The lines are used to sense the pressure of the containment atmosphere and convey it to pressure transmitters outside containment. The pressure transmitters, tubing, and pressure sensors inside containment comprise a sealed, fluid-filled assembly forming a double barrier between inside and outside containment. If the instrument line breaks outside containment, leakage of containment atmosphere is prevented by the pressure sensor and the sealed tubing boundary inside containment. If a break occurs inside containment, leakage is prevented by the transmitter and tubing boundary outside containment. The pressure sensors, tubing, and pressure transmitters are designed and tested for seismic Category I service.

The containment pressure analyses are based on an ambient air temperature of 115°F dry bulb and 86.1°F coincident wet bulb. The passive containment cooling water storage tank water temperature basis is 120°F. Results of the analyses are provided in Subsection 6.2.1.

The shield building air inlets were changed as part of the enhanced shield building design. The impact of these changes on the containment pressure analyses is small, and the conclusions remain valid. The analyses provided in Subsection 6.2.1 include the air inlet changes (Reference 36).

There are no changes to the AP1000 design required to address any safety issues associated with the Turkey Point Units 6 & 7 increased maximum safety wet bulb temperature of 87.4°F. The peak containment pressure at the maximum safety wet bulb temperature of 87.4°F for the Turkey Point Units 6 & 7 site is bounded by the results of the current AP1000 analysis.

The pressure decay curve for the containment using the Turkey Point Units 6 & 7 safety wet bulb value of 87.4°F is the same as the containment response for wet bulb temperatures equal to the standard maximum safety wet bulb value.

6.2.2.4 Testing and Inspection

6.2.2.4.1 Inspections

The passive containment cooling system is designed to permit periodic testing of system readiness as specified in the Technical Specifications.

The portions of the passive containment cooling system from the isolation valves to the passive containment cooling water storage tank are accessible and can be inspected during power operation or shutdown for leaktightness. Examination and inspection of the pressure retaining piping welds is performed in accordance with ASME Code, Section XI. The design of the containment vessel and air baffle retains provisions for the inspection of the vessel during plant shutdowns.

6.2.2.4.2 Preoperational Testing

Preoperational testing of the passive containment cooling system is verified to provide adequate cooling of the containment. The flow rates are confirmed at the minimum initial tank level, an intermediate step with all but one standpipe delivering flow and at a final step with all but two standpipes delivering to the containment shell. The flow rates are measured utilizing the

differential pressure across the orifices within each standpipe and will be consistent with the flow rates specified in Table 6.2.2-1.

The containment coverage will be measured at the base of the upper annulus in addition to the coverage at the spring line for the full flow case using the PCS water storage tank delivering to the containment shell and a lower flow case with both PCS recirculation pumps delivering to the containment shell. For the low flow case, a throttle valve is used to obtain a low flow rate less than the full capacity of the PCS recirculation pumps. This flow rate is then re-established for subsequent tests using the throttle valve. These benchmark values will be used to develop acceptance criteria for the Technical Specifications. The full flow condition is selected since it is the most important flow rate from the standpoint of peak containment pressure and the lower flow rate is selected to verify wetting characteristics at less than full flow conditions.

The standpipe elevations are verified to be at the values specified in Table 6.2.2-2.

The inventory within the tank is verified to provide 72 hours of operation from the minimum initial operating water level with a minimum flow rate over the duration in excess of 100.7 gpm. The flow rates are measured utilizing the differential pressure across the orifices within each standpipe.

The containment vessel exterior surface is verified to be coated with an inorganic zinc coating.

The passive containment cooling air flow path will be verified at the following locations:

- Air inlets
- Base of the outer annulus
- Base of the inner annulus
- Discharge structure

With either a temporary water supply or the passive containment cooling ancillary water storage tank connected to the suction of the recirculation pumps and with either of the two pumps operating, flow must be provided simultaneously to the passive containment cooling water storage tank at greater than or equal to 100 gpm and to the spent fuel pool at greater than or equal to 35 gpm. This must also be accomplished at simultaneous flow rates greater than or equal to 80 gpm to the passive containment cooling water storage tank and greater than or equal to 50 gpm to the spent fuel pool. Temporary instrumentation or changes in the passive containment cooling water storage tank level will be utilized to verify the flow rates. The capacity of the passive containment cooling ancillary water storage tank is verified to be adequate to supply 135 gpm for a duration of 4 days (for passive containment cooling and spent fuel pool makeup).

The passive containment cooling water storage tank provides makeup water to the spent fuel pool. When aligned to the spent fuel pool the flow rate is verified to exceed 118 gpm. Installed instrumentation will be utilized to verify the flow rate. The volume of the passive containment cooling water storage tank is verified to exceed the minimum usable volume defined in Table 6.2.2-2.

Additional details for preoperational testing of the passive containment cooling system are provided in Chapter 14.

6.2.2.4.3 Operational Testing

Operational testing is performed to:

- Demonstrate that the sequencing of valves occurs on the initiation of Hi-2 containment pressure and demonstrate the proper operation of remotely operated valves.
- Verify valve operation during plant operation. The normally open motor-operated valves, in series with each normally closed air-operated isolation valve, are temporarily closed. This closing permits isolation valve stroke testing without actuation of the passive containment cooling system.
- Verify water flow delivery and containment water coverage, consistent with the accident analysis.
- Verify visually that the path for containment cooling air flow is not obstructed by debris or foreign objects.
- Test frequency is consistent with the plant Technical Specifications (Subsection 16.3.6) and inservice testing program (Subsection 3.9.6).

6.2.2.5 Instrumentation Requirements

The status of the passive containment cooling system is displayed in the main control room. The operator is alerted to problems with the operation of the equipment within this system during both normal and post-accident conditions.

Normal operation of the passive containment cooling system is demonstrated by monitoring the recirculation pump discharge pressure, flow rate, water storage tank level and temperature, and valve room temperature. Post-accident operation of the passive containment cooling system is demonstrated by monitoring the passive containment cooling water storage tank level, passive containment cooling system cooling water flow rate, containment pressure, and external cooling air discharge temperature.

The information on the activation signal-generating equipment is found in Chapter 7.

The protection and safety monitoring system providing system actuation is discussed in Chapter 7.

6.2.3 Containment Isolation System

The major function of the containment isolation system of the AP1000 is to provide containment isolation to allow the normal or emergency passage of fluids through the containment boundary while preserving the integrity of the containment boundary, if required. This prevents or limits the escape of fission products that may result from postulated accidents. Containment isolation provisions are designed so that fluid lines which penetrate the primary containment boundary are isolated in the event of an accident. This minimizes the release of radioactivity to the environment.

The containment isolation system consists of the piping, valves, and actuators that isolate the containment. The design of the containment isolation system satisfies the requirements of NUREG 0737, as described in the following paragraphs.

6.2.3.1 Design Basis

6.2.3.1.1 Safety Design Basis

A. The containment isolation system is protected from the effects of natural phenomena, such as earthquakes, tornadoes, hurricanes, floods, and external missiles (General Design Criterion 2).

B. The containment isolation system is designed to remain functional after a safe shutdown earthquake (SSE) and to perform its intended function following the postulated hazards of fire, internal missiles, or pipe breaks (General Design Criteria 3 and 4).

C. The containment isolation system is designed and fabricated to codes consistent with the quality group classification, described in Section 3.2. Conformance with Regulatory Guide 1.26, 1.29, and 1.32 is described in Section 1.9.

D. The containment isolation system provides isolation of lines penetrating the containment for design basis events requiring containment integrity.

E. Upon failure of a main steam line, the containment isolation system isolates the steam generators as required to prevent excessive cooldown of the reactor coolant system or overpressurization of the containment.

F. The containment isolation system is designed in accordance with General Design Criterion 54.

G. Each line that penetrates the containment that is either a part of the reactor coolant pressure boundary or that connects directly to the containment atmosphere, and does not meet the requirements for a closed system (as defined in paragraph H below), satisfies the requirements of General Design Criteria 55 and 56. For most lines, the safety design basis is isolation valve(s) in one of the configurations described in GDC 55 and GDC 56. The acceptable basis for isolation of instrument lines for containment pressure measurements is as specified in NUREG-0800, Standard Review Plan, Section 6.2.4:

   "Regulatory Guide (RG) 1.11 describes acceptable containment isolation provisions for instrument lines. In addition, instrument lines closed both inside and outside containment are designed to withstand pressure and temperature conditions following a loss-of-coolant accident (LOCA) and dynamic effects are acceptable without isolation valves."

H. Each line that penetrates the containment, that is neither part of the reactor coolant pressure boundary nor connected directly to the atmosphere of the containment, and that satisfies the requirements of a closed system is provided with a containment isolation valve according to General Design Criterion 57. A closed system is not a part of the reactor coolant pressure boundary and is not connected directly to the atmosphere of the containment. A closed system also meets the following additional requirements:

   - The system is protected against missiles and the effects of high-energy line break.
   - The system is designed to Seismic Category I requirements.
   - The system is designed to ASME Code, Section III, Class 2 requirements.
   - The system is designed to withstand temperatures at least equal to the containment design temperature.
   - The system is designed to withstand the external pressure from the containment structural acceptance test.
   - The system is designed to withstand the design basis accident transient and environment.

I. The containment isolation system is designed so that no single failure in the containment isolation system prevents the system from performing its intended functions.

J. Fluid penetrations supporting the engineered safety features functions have remote manual isolation valves. These valves can be closed from the main control room or from the remote shutdown workstation, if required.

K. The containment isolation system is designed according to 10 CFR 50.34, so that the resetting of an isolation signal will not cause any valve to change position.

6.2.3.1.2 Power Generation Design Basis

The containment isolation system has no power generation design basis. Power generation design bases associated with individual components of the containment isolation system are discussed in the section describing the system of which they are an integral part.

6.2.3.1.3 Additional Requirements

The AP1000 containment isolation system is designed to meet the following additional requirements:

A. The containment isolation elements are designed to minimize the number of isolation valves which are subject to Type C tests of 10 CFR 50, Appendix J. Specific requirements are the following:

- The number of pipe lines which provide a direct connection between the inside and outside of primary containment during normal operation are minimized.
- Closed systems outside of containment that may be open to the containment atmosphere during an accident are designed for the same conditions as the containment itself, and are testable during Type A leak tests.
- The total number of penetrations requiring isolation valves are minimized by appropriate system design. For example:
  - In the component cooling system, a single header with branch lines inside of containment is employed instead of providing a separate penetration for each branch line.
  - Consistent with other considerations, such as containment arrangement and exposure of essential safety equipment to potentially harsh environments, the equipment is located inside and outside of containment so as to require the smallest number of penetrations.
- Consistent with current practice, Type C testing is not required for pressurized water reactor main steam, feedwater, startup feedwater, or steam generator blowdown isolation valves. The steam generator tubes are considered to be a suitable boundary to prevent release of radioactivity from the reactor coolant system following an accident. The steam generator shell and pipe lines, up to and including the first isolation valve, are considered a suitable boundary to prevent release of containment radioactivity.

B. Personnel hatches, equipment hatches, and the fuel transfer tube are sealed by closures with double gaskets.

C. Containment isolation is actuated on a two-out-of-four logic from within the protection and safety monitoring system. The safeguards signals provided to each isolation valve are selected to enhance plant safety. Provisions are provided for manual containment isolation from the main control room.

D. Penetration lines with automatic isolation valves are isolated by engineered safety features actuation signals.

E. Isolation valves are designed to provide leaktight service against the medium to which the valves are exposed in the short and long-term course of any accident. For example, a valve is gas-tight if the valve is exposed to the containment atmosphere.

F. Isolation valves are designed to have the capacity to close against the conditions that may exist during events requiring containment isolation.

G. Isolation valve closure times are designed to limit the release of radioactivity to within regulation and are consistent with standard valve operators, except where a shorter closure time is required.

H. The position of each power-operated isolation valve (fully closed or open), whether automatic or remote manual, is indicated in the main control room and is provided as input to the plant computer. Such position indication is based on actual valve position, for example, by a limit switch which directly senses the actual valve stem position, rather than demanded valve position.

I. Normally closed manual containment isolation valves have provisions for locking the valves closed. Locking devices are designed such that the valves can be locked only in the fully closed position. Administrative control provides verification that manual isolation valves are maintained locked closed during normal operation. Position locks provide confidence that valves are placed in the correct position prior to locking.

J. Automatic containment isolation valves are powered by Class 1E dc power. Air-operated valves fail in the closed position upon loss of a support system, such as instrument air or electric power.

K. Valve alignments used for fluid system testing during operation are designed so that either: containment bypass does not occur during testing, assuming a single failure; or exceptions are identified, and remotely operated valves provide timely isolation from the control room. Containment isolation provisions can be relaxed during system testing. The intent of the design is to provide confidence that operators are aware of any such condition and have the capability to restore containment integrity.

L. A diverse method of initiating closure is provided for those containment isolation valves associated with penetrations representing the highest potential for containment bypass. Diverse actuation is discussed in Section 7.7.

M. Containment penetrations with leaktight barriers, both inboard and outboard, are designed to limit pressure excursion between the barriers due to heatup of fluid between the barriers. The penetration will either be fitted with relief or check valves to relieve internal pressure or one of the valves has been designed or oriented to limit pressures to an acceptable value. For example, a penetration which incorporates two air-operated globe valves –one of the globe valves will be oriented such that pressure between the two valves will lift the plug from the seat to relieve the pressure, then reseat.

6.2.3.2 System Description

6.2.3.2.1 General Description

Piping systems penetrating the containment have containment isolation features. These features serve to minimize the release of fission products following a design basis accident. SRP Section 6.2.4 provides acceptable alternative arrangements to the explicit arrangements given in General Design Criteria 55, 56 and 57. Table 6.2.3-1 lists each penetration and provides a summary of the containment isolation characteristics. The Piping and Instrumentation Diagrams of the applicable systems show the functional arrangement of the containment penetration, isolation valves, test and drain connections. Section 1.7 contains a list of the Piping and Instrumentation Diagrams.

As discussed in Subsection 6.2.3.1, the AP1000 containment isolation design satisfies the NRC requirements including post-Three Mile Island requirements. Two barriers are provided -- one inside containment and one outside containment. Usually these barriers are valves, but in some cases they are closed piping systems not connected to the reactor coolant system or to the containment atmosphere.

The AP1000 has fewer mechanical containment penetrations (including hatches) and a higher percentage of normally closed isolation valves than current plants. The majority of the penetrations that are normally open incorporate fail closed isolation valves that close automatically with the loss of support systems such as instrument air. Table 6.2.3-1 lists the AP1000 containment mechanical penetrations and the isolation valves associated with them. Provisions for leak testing are discussed in Subsection 6.2.5.

For those systems having automatic isolation valves or for those provided with remote-manual isolation, Subsection 6.2.3.5 describes the power supply and associated actuation system. Power-operated (air, motor, or pneumatic) containment isolation valves have position indication in the main control room.

The actuation signal that occurs directly as a result of the event initiating containment isolation is designated in Table 6.2.3-1. If a change in valve position is required at any time following primary actuation, a secondary actuation signal is generated which places the valve in an alternative position. The closure times for automatic containment isolation valves are provided in Table 6.2.3-1.

The containment air filtration system is used to purge the containment atmosphere of airborne radioactivity during normal plant operation. The containment vacuum relief system is a safety grade system, used to mitigate a containment external pressure scenario, and is part of the containment air filtration system. The containment air filtration system is designed in accordance with Branch Technical Position CSB 6-4. The purge component of the air filtration system uses 16-inch supply and exhaust lines and containment isolation valves. The vacuum relief component of the air filtration system uses 6-inch supply lines and containment isolation valves. These valves close automatically on a containment isolation signal. The entire containment air filtration system is described in Subsection 9.4.7.

Section 3.6 describes dynamic effects of pipe rupture. Section 3.5 discusses missile protection, and Section 3.8 discusses the design of Category I structures including any structure used as a protective device. Lines associated with those penetrations that are considered closed systems inside the containment are protected from the effects of a pipe rupture and missiles. The actuators for power-operated isolation valves inside the containment are either located above the maximum containment water level or in a normally nonflooded area. The actuators are designed for flooded operation or are not required to function following containment isolation and designed and qualified not to spuriously open in a flooded condition.

Other defined bases for containment isolation are provided in SRP Section 6.2.4.

6.2.3.2.2 Component Description

Codes and standards applicable to the piping and valves associated with containment isolation are those for Class B components, as discussed in Section 3.2. Containment penetrations are classified as Quality Group B and Seismic Category I.

Section 3.11 provides the normal, abnormal, and post-loss-of-coolant accident environment that is used to qualify the operability of power-operated isolation valves located inside the containment.

The containment penetrations which are part of the main steam system and the feedwater system are designed to meet the stress requirements of NRC Branch Technical Position MEB 3-1, and the classification and inspection requirements of NRC Branch Technical Position ASB 3-1, as described in Section 3.6. Section 3.8 discusses the interface between the piping system and the steel containment.

As discussed in Subsection 6.2.3.5, the instrumentation and control system provides the signals which determine when containment isolation is required. Containment penetrations are either normally closed prior to the isolation signal or the valves automatically close upon receipt of the appropriate engineered safety features actuation signal.

6.2.3.2.3 System Operation

During normal system operation, approximately 25 percent of the penetrations are not isolated. These lines are automatically isolated upon receipt of isolation signals, as described in Subsections 6.2.3.3 and 6.2.3.4 and Chapter 7. Lines not in use during power operation are normally closed and remain closed under administrative control during reactor operation.

6.2.3.3 Design Evaluation

A. Engineered safeguards and containment isolation signals automatically isolate process lines which are normally open during operation. The containment isolation system uses diversity in the parameters sensed for the initiation of redundant train-oriented isolation signals. The majority of process lines are closed upon receipt of a containment isolation signal. This safeguards signal is generated by any of the following initiating conditions.

   - Low pressurizer pressure
   - Low steam-line pressure
   - Low T_{cold}
   - High containment pressure
   - Manual containment isolation actuation

   The component cooling water lines penetrating containment provide cooling water to the reactor coolant pumps and chemical and volume control system and liquid radwaste system heat exchangers. The reactor coolant pumps are interlocked to trip following a safeguards actuation (S) signal but will continue to operate (if in service) following a containment isolation (T) signal. In order to provide reliable cooling to the reactor coolant pumps the component cooling lines are isolated on a safeguards actuation signal rather than on a containment isolation signal. The safeguards actuation signal is generated by any of the following conditions.

- Low pressurizer pressure
- Low steam line pressure
- Low reactor coolant inlet temperature
- High containment pressure
- Manual initiation

The chemical and volume control system charging line, normal residual heat removal system reactor coolant and IRWST cooling lines, and containment air filtration system containment purge lines are isolated on high containment radiation signals. Closure of the containment air filtration system isolation valves is based on providing rapid response to elevated activity conditions in containment to limit offsite doses and is initiated on either a high radiation signal or a containment isolation signal consistent with the requirements of NUREG-0737 (Reference 22) and NUREG-0718 Rev 2 (Reference 23). The isolation of the chemical and volume control system charging line on a high radiation signal and normal residual heat removal system cooling lines on a high radiation or safeguards actuation signal with provisions to reset safeguards actuation signal for the normal residual heat removal system valves permits a defense in depth response to a postulated accident by providing for normal residual heat removal system and chemical and volume control system operation unless there is a high radiation level present.

The remainder of the containment isolation valves are closed on parameters indicative of the need to isolate.

B. Upon failure of a main steam line, the steam generators are isolated, and the main steam-line isolation valves, main steam-line isolation bypass valves, power operated relief block valves, and the main steam-line drain are closed to prevent excessive cooldown of the reactor coolant system or overpressurization of the containment.

The two redundant train-oriented steam-line isolation signals are initiated upon receipt of any of the following signals:

- Low steam-line pressure
- High steam pressure negative rate
- High containment pressure
- Manual actuation
- Low T_{cold}

The main steam-line isolation valves, main steam line isolation valve bypass valves, main feedwater isolation valves, steam generator blowdown system isolation valves, and piping are designed to prevent uncontrolled blowdown from more than one steam generator. The main steam-line isolation valves and main feedwater isolation valves close fully within 5 seconds after an isolation is initiated. The blowdown rate is restricted by steam flow restrictors located within the steam generator outlet steam nozzles in each blowdown path. For main steam-line breaks upstream of an isolation valve, uncontrolled blowdown from more than one steam generator is prevented by the main steam-line isolation valves on each main steam line.

Failure of any one of these components relied upon to prevent uncontrolled blowdown of more than one steam generator does not permit a second steam generator blowdown to occur. No single active component failure results in the failure of more than one main steam isolation valve to operate. Redundant main steam isolation signals, described in Section 7.3, are fed to redundant parallel actuation vent valves to provide isolation valve closure in the event of a single isolation signal failure.

The effects on the reactor coolant system after a steam-line break resulting in single steam generator blowdown and the offsite radiation exposure after a steam line break outside containment are discussed in Chapter 15. The containment pressure transient following a main steam-line break inside containment is discussed in Section 6.2.

C. The containment isolation system is designed according to General Design Criterion 54. Leakage detection capabilities and leakage detection test program are discussed in Subsection 6.2.5. Valve operability tests are also discussed in Subsection 3.9.6. Redundancy of valves and reliability of the isolation system are provided by the other safety design bases stated in Section 6.2. Redundancy and reliability of the actuation system are covered in Section 7.3.

The use of motor-operated valves that fail as-is upon loss of actuating power in lines penetrating the containment is based upon the consideration of what valve position provides the plant safety. Furthermore, each of these valves, is provided with redundant backup valves to prevent a single failure from disabling the isolation function. Examples include: a check valve inside the containment and motor-operated valve outside the containment or two motor-operated valves in series, each powered from a separate engineered safety features division.

D. Lines that penetrate the containment and which are either part of the reactor coolant pressure boundary, connect directly to the containment atmosphere, or do not meet the requirements for a closed system are provided with one of the following valve arrangements conforming to the requirements of General Design Criteria 55 and 56, as follows:

- One locked-closed isolation valve inside and one locked-closed isolation valve outside containment
- One automatic isolation valve inside and one locked-closed isolation valve outside containment
- One locked-closed isolation valve inside and one automatic isolation valve outside containment. (A simple check valve is not used as the automatic isolation valve outside containment.)
- One automatic isolation valve inside and one automatic isolation valve outside containment. (A simple check valve is not used as the automatic isolation valve outside containment).

Isolation valves outside containment are located as close to the containment as practical. Upon loss of actuating power, air-operated automatic isolation valves fail closed.

In accordance with GDC 56, isolation of instrument lines for containment pressure transmitters is demonstrated on a different basis. The lines are closed inside and outside containment, and are designed to withstand pressure and temperature conditions following a loss-of-coolant accident (LOCA) and dynamic effects.

E. Each line penetrating the containment that is neither part of the reactor coolant pressure boundary nor connected directly to the containment atmosphere, and that satisfies the requirements of a closed system, has at least one containment isolation valve. This containment isolation valve is either automatic, locked-closed, or capable of remote-manual operation. The valve is outside the containment and located as close to the containment as practical. A simple check valve is not used as the automatic isolation valve. This design is in compliance with General Design Criterion 57.

F. The containment isolation system is designed according to seismic Category I requirements as specified in Section 3.2. The components (and supporting structures) of any system, equipment, or structure that are non-seismic and whose collapse could result in loss of a required function of the containment isolation system through either impact or resultant flooding are evaluated to confirm that they will not collapse when subjected to seismic loading resulting from a safe shutdown earthquake.

   Air-operated isolation valves fail in the closed position upon loss of air or power. Containment isolation system valves required to be operated after a design basis accident or safe shutdown earthquake are powered by the Class 1E dc electric power system.

6.2.3.4 Tests and Inspections

6.2.3.4.1 Preoperational Testing

Preoperational testing is described in Chapter 14. The containment isolation system is testable through the operational sequence that is postulated to take place following an accident, including operation of applicable portions of the protection system and the transfer between normal and standby power sources.

The safety related function of containment boundary integrity is verified by an integrated leakage rate test. The integrated leakage rate is verified to be less than L_a as defined in Table 6.5.3-1. The integrated containment leakage rate system is utilized to measure the containment leak rate for determination of the integrated leakage rate. The containment isolation valves are verified to close within the time specified in Table 6.2.3-1.

The piping and valves associated with the containment penetration are designed and located to permit pre-service and in-service inspection according to ASME Section XI, as discussed in Subsection 3.9.6 and Section 6.6.

6.2.3.4.2 In-service Testing

Each line penetrating the containment is provided with testing features to allow containment leak rate tests according to 10 CFR 50, Appendix J, as discussed in Subsection 6.2.5.

6.2.3.5 Instrumentation and Control Application

Instrumentation and control necessary for containment isolation, and the sensors used to determine that containment isolation is required, are described in Section 7.3.

Engineered safeguards actuation signals which initiate containment isolation will be initiated using two out of four logic. Containment isolation signals can also be initiated manually from the main control room. Containment isolation valves requiring isolation close automatically on receipt of a safeguards actuation signal.

Containment isolation valves that are equipped with power operators and are automatically actuated may also be controlled individually from the main control room. Also, in the case of certain valves with actuators (for example, sampling containment isolation valves), a manual override of an automatic isolation signal is installed to permit manual control of the associated valve. For all valves except the vacuum relief containment isolation valves, the override control function can be performed only subsequent to resetting of the actuation signal. That is, deliberate manual action is required to change the position of containment isolation valves in addition to resetting the original actuation signal. Resetting of the actuation signal does not cause any valve to change position. The design does not allow ganged reopening of the containment isolation valves. Reopening of the isolation valves is performed on a valve-by-valve basis, or on a line-by-line basis. Safeguards actuation signals take precedence over manual overrides of other isolation signals. For example, a containment isolation signal causes isolation valve closure even though the high containment radiation signal is being overridden by the operator. Containment isolation valves with power operators are provided with open/closed indication, which is displayed in the main control room. The valve mechanism also provides a local mechanical indication of valve position.

As discussed in Subsection 9.4.7.2.3, the containment vacuum relief path includes normally closed motor-operated isolation valves, which are located outside the containment and open automatically to provide a flow path to allow atmospheric air into the containment to equalize differential pressure across the containment vessel shell. These valves also perform a containment isolation function when vacuum relief is not required. As discussed in Subsection 7.6.2.4, an interlock ensures the availability of the engineered safety features for the vacuum relief isolation valves to perform their vacuum relief and containment isolation functions.

If a negative containment pressure condition occurs that causes the vacuum relief isolation valves to automatically actuate open, there will not be a simultaneous need to close for containment isolation. The negative pressure inside the containment prevents expulsion of air from inside the containment when vacuum relief is actuated so that there are no challenges to the offsite dose limits or main control room habitability. Passive cooling system operations with low core decay heat may significantly delay containment pressurization.

Containment isolation is typically required for events that pressurize the containment with steam, such as a primary system or steam generator system line break, or operation of the passive core cooling systems. An event that causes containment pressurization precludes the need for vacuum relief actuation.

If containment conditions change following vacuum relief actuation so that the containment pressure increases, then the vacuum relief actuation signal (which is not latched) would clear and allow the containment isolation signal to automatically close the vacuum relief isolation valves. Since these valves would have recently opened for vacuum relief actuation during the event, it is expected that they would close. A relatively low containment pressure differential and mild containment conditions would be expected when the valves close for containment isolation during this event. Additionally, there are self-actuated vacuum relief valves inside the containment that are in series with the vacuum relief isolation valves, which provide single failure protection in the event that one of the motor-operated valves fails to close.

There is a valve interlock between the inside containment purge exhaust isolation valve and the vacuum relief isolation valves, which limits the potential release of radioactivity from the containment while the containment isolation valves are being closed.

The valve interlock prevents having two parallel vent paths out of the containment in the event of an accident where a negative pressure condition inside the containment does not exist.

The valve interlock preserves the assumptions of the dose analyses, which are bounded by closure of the normal containment purge isolation valves. Having the vacuum relief flow path open, in parallel with the normal containment purge isolation valves without a negative pressure condition in the containment, would provide simultaneous air flow discharge paths. The valve interlock prevents both paths from being open simultaneously. The potential radioactivity release out through the larger containment purge system piping bounds the potential radioactivity release out of the smaller vacuum relief piping during the closure of the vacuum relief isolation valves.

Power supplies and control functions necessary for containment isolation are Class 1E, as described in Chapters 7 and 8.

6.2.4 Containment Hydrogen Control System

The containment hydrogen control system is provided to limit the hydrogen concentration in the containment so that containment integrity is not endangered.

Following a severe accident, it is assumed that 100 percent of the fuel cladding reacts with water. Although hydrogen production due to radiolysis and corrosion occurs, the cladding reaction with water dominates the production of hydrogen for this case. The hydrogen generation from the zirconium-steam reaction could be sufficiently rapid that it may not be possible to prevent the hydrogen concentration in the containment from exceeding the lower flammability limit. The function of the containment hydrogen control system for this case is to promote hydrogen burning soon after the lower flammability limit is reached in the containment. Initiation of hydrogen burning at the lower level of hydrogen flammability prevents accidental hydrogen burn initiation at high hydrogen concentration levels and thus provides confidence that containment integrity can be maintained during hydrogen burns and that safety-related equipment can continue to operate during and after the burns.

The containment hydrogen control system serves the following functions:

- Hydrogen concentration monitoring
- Hydrogen control during and following a degraded core or core melt scenarios (provided by hydrogen igniters). In addition, two nonsafety-related passive autocatalytic recombiners (PARs) are provided for defense-in-depth protection against the buildup of hydrogen following a loss of coolant accident.

6.2.4.1 Design Basis

A. The hydrogen control system is designed to provide containment atmosphere cleanup (hydrogen control) in accordance with General Design Criterion 41, 42 and 43.

B. The hydrogen control system is designed in accordance with the requirements of 10 CFR 50.44 and meets the NRC staff's position related to hydrogen control of SECY-93-087.

C. The hydrogen control system is designed in compliance with the recommendations of NUREG 0737 and 0660 as detailed in Section 1.9.

D. The hydrogen control system is designed in accordance with the recommendations of Regulatory Guide 1.7 as discussed in Appendix 1A. The containment recirculation system discussed in Subsection 9.4.7 provides the controlled purge capability for the containment as specified in position C.4 of Regulatory Guide 1.7

E. The hydrogen control system is designed and fabricated to codes consistent with the quality group classification, described in Section 3.2. Conformance with Regulatory Guide 1.26, 1.29, and 1.32 is described in Section 1.9.

F. The hydrogen control system complies with the intent of Regulatory Guide 1.82 “The Water Sources For Long-Term Recirculation Cooling Following A Loss-Of-Coolant Accident” as it could be applied to concerns for blockage of recombiner air flow paths.

6.2.4.1.1 Containment Mixing

Containment structures are arranged to promote mixing via natural circulation. The physical mechanisms of natural circulation mixing that occur in the AP1000 are discussed in Appendix 6A and summarized below. For a postulated break low in the containment, buoyant flows develop through the lower compartments due to density head differences between the rising plume and the surrounding containment atmosphere, tending to drive mixing through lower compartments and into the region above the operating deck. There is also a degree of mixing within the region above the operating deck, which occurs due to the introduction of and the entrainment into the steam-rich plume as it rises from the operating deck openings. Thus, natural forces tend to mix the containment atmosphere.

Two general characteristics have been incorporated into the design of the AP1000 to promote mixing and eliminate dead-end compartments. The compartments below deck are large open volumes with relatively large interconnections, which promote mixing throughout the below deck region. All compartments below deck are provided with openings through the top of the compartment to eliminate the potential for a dead pocket of high-hydrogen concentration. In addition, if forced containment air-circulation is operated during post-accident recovery, then nonsafety-related fan coolers contribute to circulation in containment.

In the event of a hydrogen release to the containment, passive autocatalytic recombiners act to recombine hydrogen and oxygen on a catalytic surface (see Subsection 6.2.4.2.2). The enthalpy of reaction generates heat within a passive autocatalytic recombiner, which further drives containment mixing by natural circulation. Catalytic recombiners reduce hydrogen concentration at very low hydrogen concentrations (less than 1 percent) and very high steam concentrations, and may also promote convection to complement passive containment cooling system natural circulation currents to inhibit stratification of the containment atmosphere (Reference 17). The implementation of passive autocatalytic recombiners has a favorable impact on both containment mixing and hydrogen mitigation.

6.2.4.1.2 Validity of Hydrogen Monitoring

The hydrogen monitoring function monitors hydrogen concentrations of various locations within the containment.

6.2.4.1.3 Hydrogen Control for Severe Accident

The containment hydrogen concentration is limited by operation of the distributed hydrogen ignition subsystem. Ignition causes deflagration of hydrogen (burning of the hydrogen with flame front propagation at subsonic velocity) at hydrogen concentrations between the flammability limit and 10 volume percent and thus prevents the occurrence of hydrogen detonation (burning of hydrogen with supersonic flame front propagation).

6.2.4.2 System Design

6.2.4.2.1 Hydrogen Concentration Monitoring Subsystem

The hydrogen concentration monitoring subsystem consists of three hydrogen sensors. The sensors are placed in the upper dome where bulk hydrogen concentration can be monitored.

The system contains a total of three sensors designated as non-Class 1E serving to provide a post accident monitoring function. See Section 7.5 for additional information.

The hydrogen sensors are powered by the Non-Class 1E dc and UPS System. Sensor parameters are provided in Table 6.2.4-1. Hydrogen concentration is continuously indicated in the main control room. Additionally, high hydrogen concentration alarms are provided in the main control room.

The sensors are designed to provide a rapid response detection of changes in the bulk containment hydrogen concentration.

6.2.4.2.2 Hydrogen Recombination Subsystem

The hydrogen recombination subsystem is designed to accommodate the hydrogen production rate anticipated for loss of coolant accident. The hydrogen recombination subsystem consists of two nonsafety-related passive autocatalytic recombiners installed inside the containment above the operating deck at approximate elevations of 162 feet and 166 feet respectively, each about 13 feet inboard from the containment shell. The locations provide placement within a homogeneously mixed region of containment as supported by Subsection 6.2.4.1.1 and Appendix 6A. The location is in a predominately upflow natural convection region. Additionally, the PARs are located azimuthally away from potential high upflow regions such as the direct plume above the loop compartment.

The passive autocatalytic recombiners are simple and passive in nature without moving parts and independent of the need for electrical power or any other support system. The recombiners require no power supply and are self-actuated by the presence of the reactants (hydrogen and oxygen).

Normally, oxygen and hydrogen recombine by rapid burning only at elevated temperatures (greater than about 1100°F [600°C]). However, in the presence of catalytic materials such as the palladium group, this “catalytic burning” occurs even at temperatures below 32°F (0°C). Adsorption of the oxygen and hydrogen molecules occurs on the surface of the catalytic metal because of attractive forces of the atoms or molecules on the catalyst surface. Passive autocatalytic recombiner devices use palladium or platinum as a catalyst to combine molecular hydrogen with oxygen gases into water vapor. The catalytic process can be summarized by the following steps (Reference 15):

1. Diffusion of the reactants (oxygen and hydrogen) to the catalyst
2. Reaction of the catalyst (chemisorption)
3. Reaction of intermediates to give the product (water vapor)
4. Desorption of the product
5. Diffusion of the product away from the catalyst

The reactants must get to the catalyst before they can react and subsequently the product must move away from the catalyst before more reactants will be able to react.

The passive autocatalytic recombiner device consists of a stainless steel enclosure providing both the structure for the device and support for the catalyst material. The enclosure is open on the bottom and top and extends above the catalyst elevation to provide a chimney to yield additional lift to enhance the efficiency and ventilation capability of the device. The catalyst material is either constrained within screen cartridges or deposited on a metal plate substrate material and supported within the enclosure. The spaces between the cartridges or plates serve as ventilation channels for the throughflow. During operation, the air inside the recombiner is heated by the recombination process, causing it to rise by natural convection. As it rises, replacement air is drawn into the recombiner through the bottom of the passive autocatalytic recombiner and heated by the exothermic reaction, forming water vapor, and exhausted through the chimney where the hot gases mix with containment atmosphere. The device is a molecular diffusion filter and thus the open flow channels are not susceptible to fouling.

Passive autocatalytic recombiners begin the recombination of hydrogen and oxygen almost immediately upon exposure to these gases when the catalyst is not wetted. If the catalyst material is wet, then a short delay is experienced in passive autocatalytic recombiner startup (References 19 and 29). The delay is short with respect to the time that the PARs have to control hydrogen accumulation rates (days to weeks) following a design basis accident. The recombination process occurs at room or elevated temperature during the early period of accidents prior to the buildup of flammable gas concentrations. Passive autocatalytic recombiners are effective over a wide range of ambient temperatures, concentrations of reactants (rich and lean, oxygen/hydrogen less than 1 percent) and steam inerting (steam concentrations greater than 50 percent). Although the passive autocatalytic recombiner depletion rate reaches peak efficiency within a short period of time, the rate varies with hydrogen concentration and containment pressure, (Reference 19).

Passive autocatalytic recombiners have been shown to be effective at minimizing the buildup of hydrogen inside containment following loss of coolant accidents (Reference 16). They are provided in the AP1000 as defense-in-depth protection against the buildup of hydrogen following a loss of coolant accident. A summary of component data for the hydrogen recombiners is provided in Table 6.2.4-2.

6.2.4.2.3 Hydrogen Ignition Subsystem

The hydrogen ignition subsystem is provided to address the possibility of an event that results in a rapid production of large amounts of hydrogen such that the rate of production exceeds the capacity of the recombiners. Consequently, the containment hydrogen concentration will exceed the flammability limits. This massive hydrogen production is postulated to occur as the result of a degraded core or core melt accident (severe accident scenario) in which up to 100 percent of the zirconium fuel cladding reacts with steam to produce hydrogen.

The hydrogen ignition subsystem consists of 64 hydrogen igniters strategically distributed throughout the containment. Since the igniters are incorporated in the design to address a low-probability severe accident, the hydrogen ignition system is not Class 1E. Although not class 1E, the igniter coverage, distribution and power supply has been designed to minimize the potential loss of igniter protection globally for containment and locally for individual compartments. The igniters have been divided into two power groups. Power to each group will be normally provided by offsite power, however should offsite power be unavailable, then each of the power groups is powered by one of the onsite non-essential diesels and finally should the diesels fail to provide power then approximately 4 hours of igniter operation is supported by the non-Class 1E batteries for each group. Assignment of igniters to each group is based on providing coverage for each compartment or area by at least one igniter from each group.

The locations of the igniters are based on evaluation of hydrogen transport in the containment and the hydrogen combustion characteristics. Locations include compartmented areas in the containment and various locations throughout the free volume, including the upper dome.

For enclosed areas of the containment at least two igniters are installed. The separation between igniter locations is selected to prevent the velocity of a flame front initiated by one igniter from becoming significant before being extinguished by a similar flame front propagating from another igniter. The number of hydrogen igniters and their locations are selected considering the behavior of hydrogen in the containment during severe accidents. The likely hydrogen transport paths in the containment and hydrogen burn physics are the two important aspects influencing the choice of igniter location.

The primary objective of installing an igniter system is to promote hydrogen burning at a low concentration and, to the extent possible, to burn hydrogen more or less continuously so that the hydrogen concentration does not build up in the containment. To achieve this goal, igniters are placed in the major regions of the containment where hydrogen may be released, through which it may flow, or where it may accumulate. The criteria utilized in the evaluation and the application of the criteria to specific compartments is provided in Table 6.2.4-6. The location of igniters throughout containment is provided in Figures 6.2.4-5 through 6.2.4-13. The location of igniters is also summarized in Table 6.2.4-7 identifying subcompartment/regions and which igniters by power group provide protection. The locations identified are considered approximations (± 2.5 feet) with the final locations governed by the installation details.

The igniter assembly is designed to maintain the surface temperature within a range of 1600° to 1700°F in the anticipated containment environment following a loss of coolant accident. A spray shield is provided to protect the igniter from falling water drops (resulting from condensation of steam on the containment shell and on nearby equipment and structures). Design parameters for the igniters are provided in Table 6.2.4-3.

6.2.4.2.4 Containment Purge

Containment purge is not part of the containment hydrogen control system. The purge capability of the containment air filtration system (see Subsection 9.4.7) can be used to provide containment venting prior to post-loss of coolant accident cleanup operations.

6.2.4.3 Design Evaluation (Design Basis Accident)

A design basis accident evaluation is not required.

6.2.4.4 Design Evaluation (Severe Accident)

Although a severe accident involving major core degradation or core melt is not a design basis accident, the containment hydrogen control system contains design features to address this potential occurrence. The hydrogen monitoring subsystem has sufficient range to monitor concentrations up to 20 percent hydrogen. The hydrogen ignition subsystem is provided so that hydrogen is burned off in a controlled manner, preventing the possibility of deflagration with supersonic flame front propagation which could result in large pressure spikes in the containment.

It is assumed that 100 percent of the active fuel cladding zirconium reacts with steam. This reaction may take several hours to complete. The igniters initiate hydrogen burns at concentrations less than 10 percent by volume and prevent the containment hydrogen concentration from exceeding this limit. Further evaluation of hydrogen control by the igniters is presented in the AP1000 Probabilistic Risk Assessment.

6.2.4.5 Tests and Inspections

6.2.4.5.1 Preoperational Inspection and Testing

Hydrogen Monitoring Subsystem

Pre-operational testing is performed either before or after installation but prior to plant startup to verify performance.

Hydrogen Recombination Subsystem

The performance of the autocatalytic recombiner plates (or cartridges) is tested by the manufacturer for each lot or batch of catalyst material. The number of plates tested is based on the guidance provided in ANSI/ASQC Z1.4-1993, “Sampling Procedures and Tables for Inspection by Attributes,” (formerly Military Standard 105), required to achieve Inspection Level III quality level.

Hydrogen Ignition Subsystem

Pre-operational testing and inspection is performed after installation of the hydrogen ignition system and prior to plant startup to verify operability of the hydrogen igniters. It is verified that 64 igniter assemblies are installed at the locations defined by Figures 6.2.4-5 through 6.2.4-11. Operability of the igniters is confirmed by verification of the surface temperature in excess of the value specified in Table 6.2.4-3. This temperature is sufficient to ensure ignition of hydrogen concentrations above the flammability limit.

Pre-operational inspection is performed to verify the location of openings through the ceilings of the passive core cooling system valve/accumulator rooms with respect to the containment pressure boundary. The primary openings are those that constitute 98% of the opening area. The primary openings in Room 11206 that vent to Room 11300 are the equipment access opening and CMT-A opening. These openings are verified to be a minimum distance of 24.3 feet and 9.4 feet, respectively, from the containment shell. The primary opening in Room 11207 that vents to Room 11300 is the CMT-B opening, which is verified to be a minimum distance of 24.6 feet away from the containment shell. Other openings through the ceilings of these rooms are verified to be at least 3 feet from the containment shell.

Pre-operational inspection is performed to verify the orientation of the vents from the IRWST that are located along the side of the IRWST next to the containment. The discharge of each of these IRWST vents must be oriented generally away from the containment shell.

6.2.4.5.2 In-service Testing

Hydrogen Monitoring Subsystem

The system is normally in service. Periodic testing and calibration are performed to provide ongoing confirmation that the hydrogen monitoring function can be reliably performed.

Hydrogen Recombination Subsystem

Periodic inspection and testing are performed on the passive autocatalytic recombiners. The testing is performed by testing a sample of the catalyst plates as specified in Subsection 6.2.4.5.1.

Hydrogen Ignition Subsystem

Periodic inspection and testing are performed to confirm the continued operability of the hydrogen ignition system. Operability testing consists of energizing the igniters and confirming the surface temperature exceeds the value specified in Table 6.2.4-3.

6.2.4.6 Combined License Information

This section contained no requirement for additional information.

6.2.5 Containment Leak Rate Test System

The reactor containment, containment penetrations and isolation barriers are designed to permit periodic leak rate testing in accordance with General Design Criteria 52, 53, and 54. The containment leak rate test system is designed to verify that leakage from the containment remains within limits established in the technical specifications, Chapter 16.

6.2.5.1 Design Basis

Leak rate testing requirements are defined by 10 CFR 50 Appendix J, "Primary Reactor Containment Leakage Testing for Water Cooled Power Reactors," (Reference 14) which classifies leak tests as Types A, B and C. The system design provides testing capability consistent with the testing requirements of ANSI-56.8 (Reference 13). The system design accommodates the test methods and frequencies consistent with requirements of 10 CFR 50 Appendix J, Option A or Option B.

The Containment Leak Rate Test Program using 10 CFR Part 50, Appendix J Option B is established in accordance with NEI 94-01 (Subsection 6.2.7, Reference 30), as modified and endorsed by the NRC in Regulatory Guide 1.163. Table 13.4-201 provides milestones for containment leak rate testing implementation.

6.2.5.1.1 Safety Design Basis

The containment leak rate test system serves no safety-related function other than containment isolation, and therefore has no nuclear safety design basis except for containment isolation. See Subsection 6.2.3 for the containment isolation system.

6.2.5.1.2 Power Generation Design Basis

The containment leak rate test system is designed to verify the leak tightness of the reactor containment. The specified maximum allowable containment leak rate is 0.10 weight percent of the containment air mass per day at the calculated peak accident pressure, P_a, identified in Subsection 6.2.1. The system is specifically designed to perform the following tests in accordance with the provisions of ANSI-56.8 (Reference 13):

- Containment integrated leak rate testing (Type A): The containment is pressurized with clean, dry air to a pressure of P_a. Measurements of containment pressure, dry bulb temperature, and dew point temperature are used to determine the decrease in the mass of air in the containment over time, and thus establish the leak rate.

- Local leak rate testing of containment penetrations with a design that incorporates features such as resilient seals, gaskets, and expansion bellows (Type B): The leakage limiting boundary is pressurized with air or nitrogen to a pressure of P_a and the pressure decay or the leak flow rate is measured.

- Local leak rate testing of containment isolation valves (Type C): The piping test volume is pressurized with air or nitrogen to a pressure of P_a and pressure decay or the leak flow rate is measured. For valves sealed with a fluid such as water, the test volume is pressurized with the seal fluid to a pressure of not less than 1.1 P_a.

The containment leak rate test system piping is also designed for use during the performance of the containment structural integrity test. The instrumentation used for the structural integrity test may be different than that used for the integrated leak rate test.

6.2.5.1.3 Codes and Standards

The containment leak rate test system is designed to conform to the applicable codes and standards listed in Section 3.2. The containment leak testing program satisfies 10 CFR 50, Appendix J requirements.

6.2.5.2 System Description

6.2.5.2.1 General Description

The containment leak rate test system is illustrated on Figure 6.2.5-1. Unless otherwise indicated on the figure, piping and instrumentation is permanently installed. Fixed test connections used for Type C testing of piping penetrations are not shown on Figure 6.2.5-1. These connections are not part of the containment leak rate test system and are shown on the applicable system piping and instrument diagram figure.

Air compressor assemblies used for Type A testing are temporarily installed and are connected to the permanent system piping. The number and capacity of the compressors is sufficient to pressurize the containment with air to a pressure of P_a at a maximum containment pressurization rate of about 5 psi/hour. The compressor assemblies include additional equipment, such as air coolers, moisture separators and air dryers to reduce the moisture content of the air entering containment.

Temperature and humidity sensors are installed inside containment for Type A testing. Data acquisition hardware and instrumentation is available outside containment. Instrumentation not required during normal plant operation may be installed temporarily for the Type A tests.

The system is designed to permit depressurization of the containment at a maximum rate of 10 psi/hour.

Portable leak rate test panels are used to perform Type C containment isolation valve leak testing using air or nitrogen. The panels are also used for Type B testing of penetrations, for which there is no permanently installed test equipment. The panels include pressure regulators, filters, pressure gauges and flow instrumentation, as required to perform specific tests.

6.2.5.2.2 System Operation

Containment Integrated Leak Rate Test (Type A)

An integrated leak rate test of the primary reactor containment is performed prior to initial plant operation, and periodically thereafter, to confirm that the total leakage from the containment does not exceed the maximum allowable leak rate. The allowable leak rate specified in the test criteria is less than the maximum allowable containment leak rate, in accordance with 10 CFR 50, Appendix J.

Following construction of the containment and satisfactory completion of the structural integrity test, described in Subsection 3.8.2.7, a preoperational Type A test is performed as described in Chapter 14. Additional Type A tests are conducted during the plant life, at intervals in accordance with the technical specifications, Chapter 16.

- Pretest Requirements

Prior to performing an integrated leak rate test, a number of pretest requirements must be satisfied as described in this subsection.

A general inspection of the accessible interior and exterior surfaces of the primary containment structure and components is performed to uncover any evidence of structural deterioration that could affect either the containment structural integrity or leak tightness. If there is evidence of structural deterioration, corrective action is taken prior to performing the Type A test. The structural deterioration and corrective action are reported in accordance with 10 CFR 50, Appendix J. Except as described above, during the period between the initiation of the containment inspection and the performance of the Type A test, no repairs or adjustments are made so that the containment can be tested in as close to the “as-is” condition as practical.

Containment isolation valves are placed in their post-accident positions, identified in Table 6.2.3-1, unless such positioning is impractical or unsafe. Test exceptions to post-accident valve positioning are identified in Table 6.2.3-1 or are discussed in the test report. Closure of containment isolation valves is accomplished by normal operation and with no preliminary exercising or adjustments (such as tightening of a valve by manual handwheel after closure by the power actuator). Valve closure malfunctions or valve leakage that requires corrective action before the test is reported in conjunction with the Type A test report.

Those portions of fluid systems that are part of the reactor coolant pressure boundary and are open directly to the containment atmosphere under post-accident conditions and become an extension of the boundary of the containment, are opened or vented to the containment atmosphere prior to and during the test.

Portions of systems inside containment that penetrate containment and could rupture as a result of a loss of coolant accident are vented to the containment atmosphere and drained of water to the extent necessary to provide exposure of the containment isolation valves to containment air test pressure and to allow them to be subjected to the full differential test pressure, except that:

- Systems that are required to maintain the plant in a safe condition during the Type A test remain operable and are not vented.
- Systems that are required to establish and maintain equilibrium containment conditions during Type A testing remain operable and are not vented.
- Systems that are normally filled with water and operating under post-accident conditions are not vented.

Systems not required to be vented and drained for Type A testing are identified in Table 6.2.3-1. The leak rates for the containment isolation valves in these systems, measured by Type C testing, are reported in the Type A test report.

Tanks inside the containment are vented to the containment atmosphere as necessary to protect them from the effects of external test pressure and/or to preclude leakage which could affect the accuracy of the test results. Similarly, instrumentation and other components that could be adversely affected by the test pressure are vented or removed from containment.

The containment atmospheric conditions are allowed to stabilize prior to the start of the Type A test consistent with the guidance of ANSI-56.8. The containment recirculation cooling system and central chilled water system are operated as necessary prior to, and during, the test to maintain stable test conditions.

- Test Method

The Type A test is conducted in accordance with ANSI-56.8, using the absolute method. The test duration is established consistent with ANSI-56.8 following the stabilization period. Periodic measurements of containment pressure, dry bulb temperatures and dew point temperatures (water vapor pressure) are used to determine the decrease in the mass of air in the containment over time. A standard statistical analysis of the data is conducted consistent with recommendations of ANSI-56.8.

The accuracy of the Type A test results is then verified by a supplemental verification test. The supplemental verification test is performed using methodology consistent with the recommendations described in ANSI-56.8.

Test criteria for the Type A test are given in the technical specifications. If any Type A test fails to meet the criteria, the test schedule for subsequent tests is adjusted in accordance with 10 CFR 50, Appendix J as defined in the Containment Leakage Rate Testing Program.

During the period between the completion of one Type A test and the initiation of the containment inspection for the subsequent Type A test, repairs or adjustments are made to components identified as exceeding individual leakage limits, as soon as practical after such leakage is identified.

Containment Penetration Leak Rate Tests (Type B)

The following containment penetrations receive preoperational and periodic Type B leak rate tests in accordance with ANSI-56.8 with test intervals as defined by NEI 94-01 (Reference 30):

- Penetrations whose design incorporates resilient seals, gaskets or sealant compounds
- Air locks and associated door seals
- Equipment and access hatches and associated seals
- Electrical penetrations
- Expansion bellows for main steam and feedwater piping penetrations

Figure 6.2.5-1 provides the piping and instrumentation diagram for the containment leak rate test system and illustrates examples of containment penetrations subject to Type B tests.

The fuel transfer tube penetration is sealed with a blind flange inside containment. The flanged joint is fitted with testable seals as shown in Figure 3.8.2-4. The two expansion bellows used on the fuel transfer tube penetration are not part of the leakage-limiting boundary of the containment.

The personnel hatches (airlocks) are designed to be tested by internal pressurization. The doors of the personnel hatches have testable seals as shown in Figure 3.8.2-3. Mechanical and electrical penetrations on the personnel hatches are also equipped with testable seals. The hatch cover flanges for the main equipment and maintenance hatches have testable seals as shown in Figure 3.8.2-2. Containment electrical penetrations have testable seals as shown in Figure 3.8.2-6.

Type B leak tests are performed by local pressurization using the test connections shown on Figure 6.2.5-1. Unless otherwise noted in Table 6.2.3-1, the test pressure is not less than the calculated containment peak accident pressure, P_a. Either the pressure decay or the flowmeter test method is used. These test methods and the test criteria are presented below for Type C tests.

Containment Isolation Valve Leak Rate Tests (Type C)

Containment isolation valves receive preoperational and periodic Type C leak rate tests in accordance with ANSI-56.8 with test intervals as defined by NEI 94-01 (Reference 30). A list of containment isolation valves subject to Type C tests is provided in Table 6.2.3-1. Containment isolation valve arrangement and test connections provided for Type C testing are illustrated on the applicable system piping and instrument diagram figure.

Type C leak tests are performed by local pressurization. Each valve to be tested is closed by normal means without any preliminary exercising or adjustments. Piping is drained and vented as needed and a test volume is established that, when pressurized, will produce a differential pressure across the valve. Table 6.2.3-1 identifies the direction in which the differential pressure is applied.

Isolation valves whose seats may be exposed to the containment atmosphere subsequent to a loss of coolant accident are tested with air or nitrogen at a pressure not less than P_a. Valves in lines which are designed to be, or remain, filled with a liquid for at least 30 days subsequent to a loss of coolant accident are leak rate tested with that liquid at a pressure not less than 1.1 times P_a. Isolation valves tested with liquid are identified in Table 6.2.3-1.

Isolation valves are tested using either the pressure decay or flowmeter method. For the pressure decay method the test volume is pressurized with air or nitrogen. The rate of decay of pressure in the known volume is monitored to calculate the leak rate. For the flowmeter method pressure is maintained in the test volume by supplying air or nitrogen through a calibrated flowmeter. The measured makeup flow rate is the isolation valve leak rate.

The leak rates of penetrations and valves subject to Type B and C testing are combined in accordance with 10 CFR 50, Appendix J. As each Type B or C test, or group of tests, is completed the combined total leak rate is revised to reflect the latest results. Thus, a reliable summary of containment leaktightness is maintained current. Leak rate limits and the criteria for the combined leakage results are described in the technical specifications.

Scheduling and Reporting of Periodic Tests

Schedules for the performance of periodic Type A, B, and C leak rate tests are in accordance with the technical specifications, Chapter 16 as specified in the Containment Leakage Rate Testing Program. Provisions for reporting test results are described in the Containment Leakage Rate Testing Program.

Type B and C tests may be conducted at any time that plant conditions permit, provided that the time between tests for any individual penetration or valve does not exceed the maximum allowable interval specified in the Containment Leakage Rate Testing Program.

Schedules for the performance of periodic Type A, B, and C leak rate tests are in accordance with NEI 94-01, as endorsed and modified by Regulatory Guide 1.163, and described below:

Type A Tests

A preoperational Type A test is conducted prior to initial fuel load. If initial fuel load is delayed longer than 36 months after completion of the preoperational Type A test, a second preoperational Type A test shall be performed prior to initial fuel load. The first periodic Type A test is performed within 48 months after the successful completion of the last preoperational Type A test. Periodic Type A tests are performed at a frequency of at least once per 48 months, until acceptable performance is established. The interval for testing begins at initial reactor operation. Each test interval begins upon completion of a Type A test and ends at the start of the next test. The extension of the Type A test interval is determined in accordance with NEI 94-01.

Type A testing is performed during a period of reactor shutdown at a frequency of at least once per 10 years based on acceptable performance history. Acceptable performance history is defined as successful completion of two consecutive Type A tests where the calculated performance leakage rate was less than 1.0 L_a. A preoperational Type A test may be used as one of the two Type A tests that must be successfully completed to extend the test interval, provided that an engineering analysis is performed to document why a preoperational Type A test can be treated as a periodic test. Elapsed time between the first and last tests in a series of consecutive satisfactory tests used to determine performance shall be at least 24 months.

Type B Tests (Except Containment Airlocks)

Type B tests are performed prior to initial entry into Mode 4. Subsequent periodic Type B tests are performed at a frequency of at least once per 30 months, until acceptable performance is established. The test intervals for Type B penetrations may be increased based upon completion of two consecutive periodic as-found Type B tests where results of each test are within allowable administrative limits. Elapsed time between the first and last tests in a series of consecutive satisfactory tests used to determine performance shall be 24 months or the nominal test interval (e.g., refueling cycle) for the component prior to implementing Option B of 10 CFR Part 50, Appendix J. An extended test interval for Type B tests may be increased to a specific value in a range of frequencies from greater than once per 30 months up to a maximum of once per 120 months. The extension of specific test intervals for Type B penetrations is determined in accordance with NEI 94-01.

Type B Tests (Containment Airlocks)

Containment airlock(s) are tested at an internal pressure of not less than P_{ac}. (Prior to a preoperational Type A test P_{ac}= P_a.) Subsequent periodic tests are performed at a frequency of at least once per 30 months. In addition, equalizing valves, door seals, and penetrations with resilient seals (i.e., shaft seals, electrical penetrations, view port seals and other similar penetrations) that are testable, are tested at a frequency of once per 30 months.

For periods of multiple containment entries where the airlock doors are routinely used for access more frequently than once every seven days (e.g., shift or daily inspection tours of the containment), door seals may be tested once per 30 days during this time period.

Airlock door seals are tested prior to a preoperational Type A test. When containment integrity is required, airlock door seals are tested within seven days after each containment access.

Type C Tests

Type C tests are performed prior to initial entry into Mode 4. Subsequent periodic Type C tests are performed at a frequency of at least once per 30 months, until adequate performance has been established. Test intervals for Type C valves may be increased based upon completion of two consecutive periodic as-found Type C tests where the result of each test is within allowable administrative limits. Elapsed time between the first and last tests in a series of consecutive passing tests used to determine performance shall be 24 months or the nominal test interval (e.g., refueling cycle) for the valve prior to implementing Option B of 10 CFR Part 50, Appendix J. Intervals for Type C testing may be increased to a specific value in a range of frequencies from 30 months up to a maximum of 60 months. Test interval extensions for Type C valves are determined in accordance with NEI 94-01.

Reporting

A post-outage report is prepared presenting results of the previous cycle's Type B and Type C tests, and Type A, Type B and Type C tests, if performed during that outage. The report is available on-site

for NRC review. The report shows that the applicable performance criteria are met, and serves as a record that continuing performance is acceptable.

Special Testing Requirements

AP1000 does not have a subatmospheric containment or a secondary containment. There are no containment isolation valves which rely on a fluid seal system. Thus, there are no special testing requirements.

Acceptance Criteria

Acceptance criteria for Type A, B and C Tests are established in Technical Specification 5.5.8.

6.2.5.2.3 Component Description

The system pressurization equipment is temporarily installed for Type A testing. In addition to one or more compressors, this hardware includes components such as aftercoolers, moisture separators, filters and air dryers. The hardware characteristics may vary from test to test.

The flow control valve in the pressurization line is a leaktight valve capable of throttling to a low flow rate.

6.2.5.2.4 Instrumentation Applications

For Type A testing, instruments are provided to measure containment absolute pressure, dry bulb temperature, dew point temperature, air flow rate, and atmospheric pressure. Data acquisition equipment scans, processes and records data from the individual sensors. For Type B and C testing, instruments are provided to measure pressure, dry bulb temperature, and flow rate.

The quantity and location of Type A instrumentation and permanently installed Type B instrumentation, is indicated on Figure 6.2.5-1. The type, make and range of test instruments may vary from test to test. The instrument accuracy must meet the criteria of Reference 13.

6.2.5.3 Safety Evaluation

The containment leak rate test system has no safety-related function, other than containment isolation and therefore requires no nuclear safety evaluation, other than containment isolation which is described in Subsection 6.2.3.

6.2.5.4 Inservice Inspection/Inservice Testing

There are no special inspection or testing requirements for the containment leak rate test system. Test equipment is inspected and instruments are calibrated in accordance with ANSI-56.8 criteria and the requirements of the test procedure.

6.2.6 Combined License Information for Containment Leak Rate Testing

The Containment Leakage Rate Testing Program is addressed in Subsections 6.2.5.1 and 6.2.5.2.2.

6.2.7 References

1. Not used.

2. “Ice Condenser Containment Pressure Transient Analysis Methods,” WCAP-8077, March, 1973 (Proprietary), WCAP-8078 (Non-Proprietary).

3. Shepard, R. M., et al., “Westinghouse Mass and Energy Release Data for Containment Design,” WCAP-8264-P-A, June 1975 (Proprietary), and WCAP-8312-A, Revision 2, August 1975 (Non-Proprietary).

4. “Westinghouse LOCA Mass and Energy Release Model for Containment Design - March 1979 Version,” WCAP-10325-P-A (Proprietary) and WCAP-10326-A (Non-Proprietary), May 1983.

5. Land, R. E., “Mass and Energy Releases Following a Steam Line Rupture,” WCAP-8822 (Proprietary) and WCAP-8860 (Non-Proprietary), September 1976; “Supplement 1 - Calculations of Steam Superheat in Mass/Energy Releases Following a Steamline Rupture,” WCAP-8822-P-S1 (Proprietary), January 1985; “Supplement 2 - Impact of Steam Superheat in Mass/Energy Releases Following a Steamline Rupture for Dry and Subatmospheric Containment Designs,” WCAP-8822-S2-P-A (Proprietary), September 1986.

6. Burnett, T. W. T., “LOFTRAN Code Description,” WCAP-7907-P-A (Proprietary) and WCAP-7907-A (Non-Proprietary), April 1984.

7. 10 CFR 50.46, “Acceptance Criteria for Emergency Core Cooling Systems for Light-Water Cooled Nuclear Power Reactors,” and Appendix K to 10 CFR 50, “ECCS Evaluation Model.”

8. Branch Technical Position CSB6-1, “Minimum Containment Pressure Model for PWR ECCS Performance Evaluation.”

9. Not used.

10. Not used.

11. Not used.

12. Not used.

13. ANSI/ANS-56.8-1994, “Containment System Leakage Testing Requirements.”

14. 10 CFR 50, Appendix J, “Containment Leak Rate Testing,” September 26, 1995.

15. Thomas C. L. Catalytic Processes and Proven Catalysts, Academic Press, 1970.

16. AP600 Standard Safety Analysis Report, Section 6.2.

17. J. Rohde, et al., “Hydrogen Mitigation by Catalytic Recombiners and Ignition During Severe Accidents,” Third International Conference on Containment Design and Operation, Canadian Nuclear Society, Toronto, Ontario, October 19-21, 1994.

18. Not used.

19. EPRI Report, “NIS passive autocatalytic recombiner Depletion Rate Equation for Evaluation of Hydrogen Recombination During AP600 Design Basis Accident,” EPRI ALWR Program, November 15, 1995.

20. WCAP-15846 (Proprietary) and WCAP-15862 (Non-Proprietary) “WGOTHIC Application to AP600 and AP1000,” Revision 1, March 2004.

21. Not used.

22. NUREG-737, “Clarification of TMI Action Plan Requirements,” October, 1980

23. NUREG-718. Rev. 2, “Licensing Requirements for Pending Applications for Construction Permits and Manufacturing License,” January, 1982.

24. ANSI/ASCE-8-90, Specification for the Design of Cold Formed Stainless Steel Structural Members

25. Not used.

26. WCAP-15965-P (Proprietary) and WCAP-15965-NP (Non-Proprietary), “AP1000 Subcompartment Models,” November 2002.

27. Not used.

28. Not used.

29. EPRI Report TR-107517, Volumes 1, 2, and 3, “Generic Model Tests of Passive Autocatalytic Recombiners (PARs) for Combustible Gas Control in Nuclear Power Plants,” June 1997.

30. Nuclear Energy Institute Report, NEI 94-01, “Industry Guidelines for Implementing Performance Based Option of 10 CFR 50, Appendix J,” Revision 0.

31. Carlin, E. L. and U. Bachrach, “LOFTRAN and LOFTTR2 AP600 Code Applicability Document,” WCAP-14234, Revision 1 (Proprietary) and WCAP-14235, Revision 1 (Non-Proprietary), August 1997.

32. WCAP-15644-P (Proprietary) and WCAP-15644-NP (Non-Proprietary), “AP1000 Code Applicability Report,” Revision 2, March 2004.

33. NEI 06-12, “B.5.b Phase 2 & 3 Submittal Guidelines,” Revision 2.

34. APP-GW-GLR-138, “Evaluation of the Pressurizer Changes on the AP1000 TMD Analyses,” Westinghouse Electric Company LLC, Rev. 0, August 2009.

35. APP-GW-GLR-139, “AP1000 WGOTHIC Containment Models: Disposition of Design Change Proposals,” Westinghouse Electric Company LLC, Rev. 0, August 2009.

36. APP-GW-GLR-096, “Evaluation of the Effect of AP1000 Enhanced Shield Building Design on the Containment Response and Safety Analysis,” Westinghouse Electric Company LLC, Rev. 3, June 2011.

Table 6.2.1.1-1
Summary of Calculated Pressures and Temperatures

Break	Peak Pressure (psig)	Available[1] Margin (psi)	Peak Temperature (°F)
Double-ended hot leg guillotine	50.4	8.6	411.3
Double-ended cold leg guillotine	58.3	0.7	295.7
Full main steam line DER, 30% power, MSIV failure	58.2	0.8	373.2
Full main steam line DER, 101% power, MSIV failure	54.2	4.8	374.7

Note:
1. Design Pressure is 59 psig

Table 6.2.1.1-2
Initial Conditions

Internal Temperature (°F)	120
Pressure (psia)	15.7
Relative Humidity (%)	0
Net Free Volume (ft^3)	2.06E+06
External Temperature (°F)	115 dry bulb 86.1 wet bulb

Table 6.2.1.1-3
Results of Postulated Accidents

Criterion	Acceptance Criterion Value	Lumped DEHLG LOCA Value	Lumped DECLG LOCA Value	30% Power MSLB Value	External Pressurization Value
GDC 16 & GDC 50 Design Pressure	<59.0 psig	50.4	58.3	58.2	
GDC 38 Rapidly Reduce Containment Pressure	< 29.5 psig		22 at 24 hrs		
GDC 38 & 50 External Pressure	< 1.7 psid				1.63
GDC 38 & GDC 50 Containment Heat Removal Single Failure	Most Severe	Two of Three Trains of PCS Water Supply	Two of Three Trains of PCS Water Supply	Two of Three Trains of PCS Supply	

Tables 6.2.1.1-4–6.2.1.1-7 Not Used

Table 6.2.1.1-8
Physical Properties of Passive Heat Sinks

Material	Density (lbm/ft^3)	Thermal Conductivity (Btu/hr-ft-°F)	Specific Heat (Btu/lbm-°F)	Dry Emis.	Wet Emis.
Epoxy	105	0.1875	0.25	0.81	0.95
Carbon Steel	490.7	23.6	0.107	0.81	0.95
Concrete	140.	0.83	0.19	0.81	0.95
Stainless Steel	501.	9.4	0.12	0.81	0.95
Inorganic Zinc Coating	207.5	0.302	0.13	0.81	0.95
Inorganic Zinc Coating - Containment Vessel Interior Surface	207.5	0.302	0.13	1e-10	1e-10
Air @ 0°F	0.0864	0.0131	0.240	1e-10	1e-10
Air @ 250°F	0.056	0.0192	0.242	1e-10	1e-10
Air @ 500°F	0.0414	0.0246	0.248	1e-10	1e-10
Carbon Steel – Containment Vessel	483.8	30.0	0.107	0.81	0.95

Table 6.2.1.1-9
Containment External Pressure Analysis Major Assumptions

Pre-Transient Conditions	
Parameter	**Value**
Containment External Temperature	25°F
Containment Wind Speed	Natural convection
Containment Internal Temperature	120°F
Containment Initial Humidity	70%
IRWST Temperature	120°F
Containment Internal Pressure	14.5 psia
Transient and Post-Transient Conditions	
Containment External Temperature	Decreasing at 30°F/hr
Containment Humidity	82%
Containment Wind Speed	Forced convection at 24.8 ft/s in the riser region
Containment Heat Rate	0 decay heat, sensible heat addition ~ 1/5 design heat rate at transient time t = 0 second
Safety Analysis Limit Assumed for Vacuum Relief System Actuation	-1.2 psig

Table 6.2.1.1-10
[*DATA FOR ADDITIONAL HEAT SINKS CREDITED* IN *THE CONTAINMENT PEAK PRESSURE EVALUATION*]*

Containment Subcompartment	*Minimum Required Surface Area (ft^2)*	*Minimum Required Volume (ft^3)*
Vertical Access Tunnel	*865*	*15.1*
PXS-A	*1153*	*20.2*
PXS-B	*1681*	*29.4*
SG East	*1228*	*34.0*
SG West	*1752*	*60.7*
CMT	*12477*	*303.7*
Above Operating Deck	*4068*	*71.1*

Notes:
1. *Heat sink material is carbon steel and coated with epoxy.*
2. *Thermal properties of carbon steel and epoxy are contained in Table 6.2.1.1-8.*
3. *Density for the carbon steel references in this table is 490.7 lbm/ft^3.*

*NRC Staff approval is required prior to implementing a change in this information.

Table 6.2.1.2-1 (Sheet 1 of 3)
Listing of Lines Not LBB Qualified
and the Calculated Maximum Differential Pressures

AP1000 Room #	Possible[1] Pipe Rupture	Design Differential Pressure (psi)	Maximum Differential[2] Pressure (psi)	Table for M&E Data
11104	None	5.0	NA	NA
11105	None	5.0	NA	NA
11201	4" Pressurizer Spray	5.0	<4.0	6.2.1.3-6
11202	None	5.0	NA	NA
11204	3" Regen HX to SG	5.0	<2.9	6.2.1.3-2
	3" Purification from CL to Regen HX		<2.9	6.2.1.3-2
11205	None	5.0	NA	NA
11206	None	5.0	NA	NA
11207	None	5.0	NA	NA
11208	None	5.0	NA	NA
11209 North	None	5.0	NA	NA
11209 Center	3" Purification from Prz Spray	5.0	<4.2	6.2.1.3-7
	3" Purification to PRHR Return		<4.2	6.2.1.3-7
	3" Regen HX to Letdown HX		<4.2	6.2.1.3-7
	3" RHR HX		<4.2	6.2.1.3-7
	3" Regen HX to RNS pump		<4.2	6.2.1.3-7
11209 South	3" Regen HX to Letdown HX	5.0	<4.3	6.2.1.3-7
11209 Pipe Tunnel	3" Purification from Prz Spray to Regen HX	7.5	<6.2	6.2.1.3-7
	3" Purification from Regen HX to PRHR Return	7.5	<6.2	6.2.1.3-7
	4" SG Blowdown		<6.75	6.2.1.3-5

Table 6.2.1.2-1 (Sheet 2 of 3)
Listing of Lines Not LBB Qualified
and the Calculated Maximum Differential Pressures

AP1000 Room #	Possible[1] Pipe Rupture	Design Differential Pressure (psi)	Maximum Differential[2] Pressure (psi)	Table for M&E Data
11300	None	5.0	NA	NA
11301	3" Purification	5.0	<4.0	6.2.1.3-2 6.2.1.3-3
11302	None	5.0	NA	NA
11303	4" Pressurizer Spray	5.0	<3.7	6.2.1.3-6
11304	3" Purification to PRHR return 2" CVS Purification to Prz Spray size	5.0	<3.6 <3.6	6.2.1.3-2 Bounded by larger break
11305	None	5.0	NA	NA
11400	6" Startup Feedwater	5.0	NA	NA
11401	4" SG Blowdown	5.0	<2.9	6.2.1.3-5
11402	4" SG Blowdown	5.0	<2.9	6.2.1.3-5
11403	3" Letdown 2" Aux Spray 4" Prz Spray at 4 x 2 TEE 4" Prz Spray at Anchor	5.0	<4.5 <4.5 <4.5 <4.5	6.2.1.3-3 Bounded by larger break size 6.2.1.3-6 6.2.1.3-6
11500	None	5.0	NA	NA
11501	None	5.0	NA	NA
11502	None	5.0	NA	NA
11503	4" Pressurizer Spray	5.0	<4.0	6.2.1.3-6
11504	None	5.0	NA	NA
11601	20" Main Feedwater 6" Startup Feedwater	5.0	NA NA	NA NA

Table 6.2.1.2-1 (Sheet 3 of 3)
Listing of Lines Not LBB Qualified and the Calculated Maximum Differential Pressures

AP1000 Room #	Possible[1] Pipe Rupture	Design Differential Pressure (psi)	Maximum Differential[2] Pressure (psi)	Table for M&E Data
11602	20" Main Feedwater 6" Startup Feedwater	5.0	NA NA	NA NA
11603	4" ADS	5.0	NA	NA
11701	None	5.0	NA	NA
11702	None	5.0	NA	NA
11703	4" ADS	5.0	NA	NA

Notes:

1. "None" indicates that there are no High Energy Lines >1" in diameter that are not qualified to LBB.
2. Structures are designed to a pressurization load of 5.0 psig except as follows; the CVS room pipe tunnel is designed to a pressurization load of 7.5 psig as discussed in Subsection 3.8.3.5.
3. "NA" indicates that no calculation was performed because no rupture was postulated or that the line was postulated to rupture in a region with a large free volume so compartment differential pressures would be negligible.

Table 6.2.1.3-1
Short-term Mass and Energy Inputs

	Design Value	Analysis Value
Vessel Outlet Temperature (˚F)	610.0	597.0
Vessel Inlet Temperature (˚F)	535.0	528.6
Initial RCS Pressure (PSIA)	2250.0	2300.0
Zaloudek Coefficient (CK1)		1.018
Zaloudek Coefficient (C1)		0.9

Table 6.2.1.3-2
Short-term 3-Inch Cold-Leg
Break Mass and Energy Releases

Time (sec)	Mass (lbm/sec)	Energy (Btu/sec)
0.0	0.0	0.0
0.001	3186.8	1.7084E+6
0.05	3186.8	1.7084E+6
1.000	3186.8	1.7084E+6
5.000	3186.8	1.6591E+6
7.000	3186.8	1.6225E+6
10.00	3186.8	1.6005E+6

Table 6.2.1.3-3
Short-term 3-Inch Hot-Leg
Break Mass and Energy Releases

Time (sec)	Mass (lbm/sec)	Energy (Btu/sec)
0.0	0.0	0.0
0.001	2514.2	1.5623E+6
0.05	2514.2	1.5623E+6
1.000	2514.2	1.5640E+6
5.000	2514.2	1.6947E+6
7.000	2514.2	1.7966E+6
10.00	2514.2	1.8406E+6

Table 6.2.1.3-4 Not Used

Table 6.2.1.3-5
4" SG Blowdown Line Mass and Energy Releases

Time (sec)	Total Mass (lbm/sec)	Energy (Btu/sec)
0.0	0.0	0.0
0.492	1451.4	8.106 E+5
0.493	1451.4	8.106 E+5
6.155	1451.4	8.106 E+5
6.156	725.7	4.053 E+5
10.0	725.7	4.053 E+5

Table 6.2.1.3-6
Pressurizer Spray Line Break Releases

Time (sec)	Mass (lbm/sec)	Energy (Btu/sec)
0	3006.872	1794802
0.0503	2957.944	1768521
0.102	2941.763	1759619
0.501	2856.777	1711344
0.763	2854.027	1707538
1	2860.371	1708709
1.075	2860.858	1708365
2	2766.115	1650733
3	2666.345	1590401
4	2564.804	1529641
5	2459.947	1467666

Table 6.2.1.3-7
Short-Term 3-Inch Single-Ended Cold-Leg Break
Mass and Energy Releases

Time (sec)	Mass (lbm/sec)	Energy (Btu/sec)
0.0	0.0	0.0
0.001	1593.4	8.5420E+05
0.050	1593.4	8.5420E+05
1.001	1593.4	8.5420E+05
5.000	1593.4	8.2955E+05
7.000	1593.4	8.1125E+05
10.00	1593.4	8.0025E+05

Table 6.2.1.3-8
Basis for Long-Term Analysis

Number of Loops	2
Active Core Length (ft)	14.0
Core Power, license application (MWt)	3400
Nominal Vessel Inlet Temperature (°F)	537.2
Nominal Vessel Outlet Temperature (°F)	610.0
Steam Pressure (psia)	881.0
Rod Array	17 x 17
Accumulator Temperature (°F)	120.0
Containment Design Pressure (psia)	73.7

Table 6.2.1.3-9 (Sheet 1 of 11)
Long-Term DECL Break
Mass and Energy Releases

Time (sec)	Two-Phase		Steam	
	Mass (lbm/sec)	Enthalpy (Btu/lbm)	Mass (lbm/sec)	Enthalpy (Btu/lbm)
0.00000	0.00	0.00	0.00	1172.85
0.00106	39416.39	533.99	0.00	1172.85
0.00205	39976.70	534.01	0.00	1172.85
0.00303	39846.93	534.01	0.00	1172.85
0.00405	39714.54	533.99	0.00	1172.85
0.00507	39589.59	533.98	0.00	1172.85
0.00612	39451.90	533.96	0.00	1172.85
0.10129	62033.18	536.91	0.00	1172.85
0.20104	73009.07	536.91	0.00	1172.85
0.30113	86432.41	536.87	0.00	1172.85
0.40120	79446.89	536.88	0.00	1172.85
0.50140	77370.88	537.82	0.00	1172.85
0.60106	76904.12	538.37	0.00	1172.85
0.70177	76060.88	538.83	0.00	1172.85
0.80165	75376.28	539.70	0.00	1172.85
0.90141	74246.59	540.87	0.00	1172.85
1.00122	73369.21	542.22	0.00	1172.85
1.10107	72315.43	543.89	0.00	1172.85
1.20142	71305.65	545.78	0.00	1172.85
1.30141	70499.98	547.82	0.00	1172.85
1.40130	69797.20	550.01	0.00	1172.85
1.50139	67976.37	552.07	0.00	1172.85
1.60115	64602.17	553.99	0.00	1172.85

Table 6.2.1.3-9 (Sheet 2 of 11)
Long-Term DECL Break
Mass and Energy Releases

Time (sec)	Two-Phase		Steam	
	Mass (lbm/sec)	Enthalpy (Btu/lbm)	Mass (lbm/sec)	Enthalpy (Btu/lbm)
1.70144	62109.77	555.73	0.00	1172.85
1.80127	60497.08	557.14	0.00	1172.85
1.90109	59508.83	558.25	0.00	1172.85
2.00159	58409.53	559.25	0.00	1172.85
2.10125	56888.18	560.17	0.00	1172.85
2.20135	55110.10	561.09	0.00	1172.85
2.30100	53295.89	561.93	0.00	1172.85
2.40127	51285.51	562.69	0.00	1172.85
2.50117	49717.93	563.38	0.00	1172.85
2.60117	48965.37	563.94	0.00	1172.85
2.70140	47917.67	564.17	0.00	1172.85
2.80106	46919.37	564.30	0.00	1172.85
2.90111	45946.26	564.51	0.00	1172.85
3.00117	46189.59	564.85	0.00	1172.85
3.10117	43775.21	565.36	0.00	1172.85
3.20134	42401.87	565.88	0.00	1172.85
3.30120	41200.81	566.38	0.00	1172.85
3.40103	40239.87	566.79	0.00	1172.85
3.50175	36546.17	567.00	0.00	1172.85
3.60139	24505.70	566.44	0.00	1172.85
3.70182	23263.27	567.11	0.00	1172.85
3.80160	24316.00	565.41	0.00	1172.85
3.90144	24369.44	564.02	0.00	1172.85

Table 6.2.1.3-9 (Sheet 3 of 11)
Long-Term DECL Break
Mass and Energy Releases

Time (sec)	Two-Phase		Steam	
	Mass (lbm/sec)	Enthalpy (Btu/lbm)	Mass (lbm/sec)	Enthalpy (Btu/lbm)
4.00212	24251.95	563.00	0.00	1172.85
4.20107	23573.04	562.04	0.00	1172.85
4.40010	22818.81	561.68	0.00	1172.85
4.60108	22287.56	561.19	0.00	1172.85
4.80022	22107.57	560.54	0.00	1172.85
5.00030	22154.66	560.29	0.00	1172.85
5.20008	21982.49	560.79	0.00	1172.85
5.40054	21706.69	561.53	0.00	1172.85
5.60035	21384.36	561.70	0.00	1172.85
5.80005	21531.49	561.36	0.00	1172.85
6.00025	21449.36	561.24	0.00	1172.85
6.20003	21111.86	561.26	0.00	1172.85
6.40023	21047.40	561.19	0.00	1172.85
6.60025	21232.17	561.57	0.00	1172.85
6.80031	21091.05	561.89	0.00	1172.85
7.00036	20724.78	562.37	0.00	1172.85
7.20014	20684.39	562.84	0.00	1172.85
7.40050	20576.96	563.22	0.00	1172.85
7.60042	20434.16	563.56	0.00	1172.85
7.80042	20332.58	563.86	0.00	1172.85
8.00086	20183.03	564.16	0.00	1172.85
8.20072	20017.61	564.46	0.00	1172.85
8.40061	19843.80	564.84	0.00	1172.85

Table 6.2.1.3-9 (Sheet 4 of 11)
Long-Term DECL Break
Mass and Energy Releases

Time (sec)	Two-Phase		Steam	
	Mass (lbm/sec)	Enthalpy (Btu/lbm)	Mass (lbm/sec)	Enthalpy (Btu/lbm)
8.60116	19967.02	565.50	0.00	1172.85
8.80017	19944.71	566.66	0.00	1172.85
9.00004	19910.34	568.18	0.00	1172.85
9.20083	20078.99	569.94	0.00	1172.85
9.40081	19954.34	571.57	0.00	1172.85
9.60203	19612.24	573.51	0.00	1172.85
9.80018	19436.45	575.24	0.00	1172.85
10.00057	19192.38	576.99	0.00	1172.85
10.20023	18982.33	579.53	0.00	1172.85
10.40026	19035.40	582.32	0.00	1172.85
10.60066	18966.98	584.39	0.00	1172.85
10.60160	18965.07	584.40	0.00	1172.85
10.60265	18963.01	584.41	0.00	1172.85
10.60374	18960.62	584.42	0.00	1172.85
10.80033	18582.28	586.79	0.00	1172.85
11.00115	18202.83	589.43	0.00	1172.85
11.20104	17769.72	593.05	0.00	1172.85
11.40046	17501.65	596.98	0.00	1172.85
11.60025	17153.51	601.18	0.00	1172.85
11.80072	16840.23	606.51	0.00	1172.85
12.00026	16386.11	613.05	0.00	1172.85
12.20016	15967.55	621.15	0.00	1172.85
12.40094	15659.93	630.30	0.00	1172.85

Table 6.2.1.3-9 (Sheet 5 of 11)
Long-Term DECL Break
Mass and Energy Releases

Time (sec)	Two-Phase		Steam	
	Mass (lbm/sec)	Enthalpy (Btu/lbm)	Mass (lbm/sec)	Enthalpy (Btu/lbm)
12.60034	15146.48	641.10	0.00	1172.85
12.80076	14590.31	654.42	0.00	1172.85
13.00099	13763.97	670.42	0.00	1172.85
13.20002	12956.41	688.11	0.00	1172.85
13.40039	12163.43	707.19	0.00	1172.85
13.60078	11447.48	726.91	0.00	1172.85
13.80052	10813.78	745.79	0.00	1172.85
14.00045	10281.84	762.99	0.00	1172.85
14.20056	9855.38	777.70	0.00	1172.85
14.40055	9516.34	788.78	0.00	1172.85
14.60032	9294.01	794.02	0.00	1172.85
14.80061	9114.06	796.99	0.00	1172.85
15.00052	8850.02	805.47	0.00	1172.85
15.20054	8553.39	817.58	0.00	1172.85
15.40027	8269.91	830.19	0.00	1172.85
15.60031	7996.68	843.22	0.00	1172.85
15.80071	7782.09	851.98	0.00	1172.85
16.00025	7542.15	863.42	0.00	1172.85
16.20024	7325.72	874.13	0.00	1172.85
16.40057	7106.64	885.66	0.00	1172.85
16.60056	6922.81	894.38	0.00	1172.85
16.80062	6743.83	903.23	0.00	1172.85
17.00075	6566.78	912.24	0.00	1172.85
17.20051	6393.25	919.45	0.00	1172.85

Table 6.2.1.3-9 (Sheet 6 of 11)
Long-Term DECL Break
Mass and Energy Releases

Time (sec)	Two-Phase		Steam	
	Mass (lbm/sec)	Enthalpy (Btu/lbm)	Mass (lbm/sec)	Enthalpy (Btu/lbm)
17.40063	6240.54	913.83	0.00	1172.85
17.60044	6071.28	895.82	0.00	1172.85
17.80026	5905.23	867.46	0.00	1172.85
18.00064	5938.72	825.82	0.00	1172.85
18.20039	6053.69	780.58	0.00	1172.85
18.40067	5936.43	748.79	0.00	1172.85
18.60058	5636.40	745.76	0.00	1172.85
18.80048	5289.59	756.38	0.00	1172.85
19.00024	4967.25	764.96	0.00	1172.85
19.20011	4713.96	763.33	0.00	1172.85
19.40067	4492.20	756.38	0.00	1172.85
19.60046	4291.21	746.54	0.00	1172.85
19.80071	4155.79	723.01	0.00	1172.85
20.00029	4099.29	685.55	0.00	1172.85
20.20059	4030.29	656.55	0.00	1172.85
20.40018	3966.41	635.51	0.00	1172.85
20.60045	3864.88	620.35	0.00	1172.85
20.80078	3777.01	606.45	0.00	1172.85
21.00050	3702.30	593.76	0.00	1172.85
21.20040	3625.58	582.35	0.00	1172.85
21.40064	3554.22	571.10	0.00	1172.85
21.60050	3482.45	560.27	0.00	1172.85
21.80035	3409.47	549.98	0.00	1172.85
22.00024	3330.23	538.56	0.00	1172.85

Table 6.2.1.3-9 (Sheet 7 of 11)
Long-Term DECL Break
Mass and Energy Releases

Time (sec)	Two-Phase		Steam	
	Mass (lbm/sec)	Enthalpy (Btu/lbm)	Mass (lbm/sec)	Enthalpy (Btu/lbm)
22.40009	3211.59	510.03	0.00	1172.85
22.60079	3170.54	496.12	0.00	1172.85
22.80007	3115.93	482.66	0.00	1172.85
23.00017	3070.13	468.89	0.00	1172.85
23.20049	2953.19	457.76	0.00	1172.85
23.40029	2850.71	446.64	0.00	1172.85
23.60026	2743.80	441.53	0.00	1172.85
23.80056	2564.31	436.72	0.00	1172.85
24.00011	2312.77	430.33	0.00	1172.85
24.20029	2022.67	391.79	0.00	1172.85
24.40060	1789.45	383.80	0.00	1172.85
24.60056	1562.10	371.67	0.00	1172.85
24.80027	1264.72	364.69	0.00	1172.85
25.00012	807.58	369.35	0.00	1172.85
25.20050	254.59	483.68	0.00	1172.85
25.40008	0.00	0.00	0.00	1172.85
27.980	900.01	155.88	322.31	1172.85
35.282	741.50	167.47	318.12	1172.85
39.990	662.30	175.24	315.48	1172.85
44.262	602.24	182.49	314.70	1172.85
51.113	566.91	190.19	312.63	1172.85
55.330	559.01	193.74	311.09	1172.85
60.087	551.28	197.53	309.28	1172.85
64.616	548.38	200.55	308.04	1172.85

Table 6.2.1.3-9 (Sheet 8 of 11)
Long-Term DECL Break
Mass and Energy Releases

Time (sec)	Two-Phase		Steam	
	Mass (lbm/sec)	Enthalpy (Btu/lbm)	Mass (lbm/sec)	Enthalpy (Btu/lbm)
69.760	536.44	204.79	306.80	1172.85
75.648	528.90	208.73	305.14	1172.85
79.698	523.18	211.36	303.97	1172.85
86.426	512.04	215.72	302.73	1172.85
91.000	505.55	218.37	301.80	1172.85
95.000	497.31	220.97	301.05	1172.85
101.000	482.47	225.14	299.97	1172.85
105.000	473.08	227.77	299.48	1172.85
111.000	458.62	231.71	298.74	1172.85
119.000	438.69	236.98	297.73	1172.85
132.233	415.52	243.46	295.45	1172.85
142.632	419.49	243.29	292.35	1172.85
153.031	417.99	243.83	289.39	1172.85
163.430	413.42	244.66	287.28	1172.85
168.629	408.62	245.54	286.33	1172.85
184.228	393.40	248.17	283.48	1172.85
194.627	382.57	249.98	281.59	1172.85
215.040	357.65	254.44	278.09	1172.85
225.145	351.34	255.50	270.23	1172.85
251.346	321.37	260.99	266.35	1172.85
262.107	306.77	264.16	264.97	1172.85
278.625	283.12	269.89	263.01	1172.85
299.449	251.73	278.75	260.85	1172.85
319.815	220.69	289.15	259.03	1172.85

Table 6.2.1.3-9 (Sheet 9 of 11)
Long-Term DECL Break
Mass and Energy Releases

Time (sec)	Two-Phase		Steam	
	Mass (lbm/sec)	Enthalpy (Btu/lbm)	Mass (lbm/sec)	Enthalpy (Btu/lbm)
341.5580	0.0000	1172.8490	268.74	1172.85
357.3810	12.0055	940.0599	287.75	1172.85
380.0890	32.9991	553.7724	287.75	1172.85
401.3400	30.7774	566.7261	283.29	1172.85
422.8900	103.4044	359.3976	209.22	1172.85
439.2970	104.3732	355.6279	206.06	1172.85
461.7220	105.6001	350.6113	201.85	1172.85
482.5200	106.5179	346.2153	198.06	1172.85
503.3180	107.3398	341.9462	194.37	1172.85
518.9160	107.8976	338.8224	191.67	1172.85
539.7140	108.5566	334.7663	188.14	1172.85
560.5120	109.1380	330.8147	184.70	1172.85
581.3090	108.6867	327.8756	181.46	1172.85
602.1070	107.4965	325.6686	178.38	1172.85
648.9020	107.9551	317.6940	171.71	1172.85
701.6770	107.7743	309.5292	164.65	1172.85
749.3880	107.2554	302.6308	158.63	1172.85
801.3820	106.3264	295.6147	152.43	1172.85
848.6190	104.9430	289.8565	147.34	1172.85
898.3740	103.1431	284.2729	142.28	1172.85
947.8310	101.1513	279.0810	137.49	1172.85
1002.8910	98.6402	273.7811	132.46	1172.85
1129.2100	514.8312	141.7533	111.98	1172.85
1279.9000	524.2230	133.2774	103.22	1172.85

Table 6.2.1.3-9 (Sheet 10 of 11)
Long-Term DECL Break
Mass and Energy Releases

Time (sec)	Two-Phase		Steam	
	Mass (lbm/sec)	Enthalpy (Btu/lbm)	Mass (lbm/sec)	Enthalpy (Btu/lbm)
1380.020	525.93	128.72	98.03	1172.85
1531.160	526.97	122.83	90.99	1172.85
1984.630	524.92	110.36	74.95	1172.85
3997.770	472.92	94.61	46.88	1172.85
6009.010	416.60	93.23	38.41	1172.85
6512.700	390.70	93.40	37.33	1172.85
7518.200	348.88	93.74	35.43	1172.85
8022.810	326.01	94.01	34.56	1172.85
9980.830	250.94	95.31	32.23	1172.85
10000.000	0.00	1171.70	37.21	1171.70
15005.000	0.00	1171.70	33.26	1171.70
20005.800	0.00	1171.70	30.79	1171.70
26007.300	0.00	1171.70	29.31	1171.70
30007.900	0.00	1171.70	28.32	1171.70
36008.100	0.00	1171.70	26.70	1171.70
40000.00	0.00	1171.70	25.62	1171.70
60000.00	0.00	1171.70	22.92	1171.70
80000.00	0.00	1171.70	21.16	1171.70
100000.00	0.00	1171.70	19.83	1171.70
150000.00	0.00	1171.70	17.53	1171.70
200000.00	0.00	1171.70	15.96	1171.70
400000.00	0.00	1171.70	12.42	1171.70
600000.00	0.00	1171.70	10.54	1171.70
800000.00	0.00	1171.70	9.33	1171.70

Table 6.2.1.3-9 (Sheet 11 of 11)
Long-Term DECL Break
Mass and Energy Releases

Time (sec)	Two-Phase		Steam	
	Mass (lbm/sec)	Enthalpy (Btu/lbm)	Mass (lbm/sec)	Enthalpy (Btu/lbm)
1000000.00	0.00	1171.70	8.50	1171.70
1500000.00	0.00	1171.70	7.14	1171.70
2000000.00	0.00	1171.70	6.29	1171.70
4000000.00	0.00	1171.70	4.46	1171.70

Table 6.2.1.3-10 (Sheet 1 of 5)
Blowdown DEHL Break
Mass and Energy Releases

Time (sec)	Two-Phase		Steam	
	Mass Flow (lbm/sec)	Average Enthalpy (Btu/lbm)	Mass Flow (lbm/sec)	Enthalpy (Btu/lbm)
0.00	0.00	0.00	0.00	1175.70
.00106	1.0472857E+05	634.46	0.00	1175.70
.00210	1.0325730E+05	634.40	0.00	1175.70
.10148	7.3009123E+04	643.85	0.00	1175.70
.20165	6.8864739E+04	643.25	0.00	1175.70
.30138	6.5481087E+04	642.70	0.00	1175.70
.40100	6.2335330E+04	641.84	0.00	1175.70
50142	6.0949874E+04	639.93	0.00	1175.70
.60102	6.0214627E+04	638.05	0.00	1175.70
.70129	5.9290581E+04	637.06	0.00	1175.70
.80149	5.8541050E+04	636.72	0.00	1175.70
.90118	5.7882765E+04	637.71	0.00	1175.70
1.00134	5.7049473E+04	639.31	0.00	1175.70
1.10143	5.6060274E+04	640.94	0.00	1175.70
1.20110	5.5129172E+04	642.91	0.00	1175.70
1.30126	5.4333519E+04	645.35	0.00	1175.70
1.40143	5.3626880E+04	647.68	0.00	1175.70
1.50123	5.2863252E+04	649.02	0.00	1175.70
1.60132	5.1884060E+04	648.33	0.00	1175.70
1.70124	5.0733241E+04	646.50	0.00	1175.70
1.80130	4.9539729E+04	645.28	0.00	1175.70
1.90186	4.8416888E+04	646.97	0.00	1175.70
2.00207	4.7522841E+04	647.55	0.00	1175.70
2.10122	4.6730052E+04	647.65	0.00	1175.70
2.20102	4.5964386E+04	647.24	0.00	1175.70

Table 6.2.1.3-10 (Sheet 2 of 5)
Blowdown DEHL Break
Mass and Energy Releases

Time (sec)	Two-Phase		Steam	
	Mass Flow (lbm/sec)	Average Enthalpy (Btu/lbm)	Mass Flow (lbm/sec)	Enthalpy (Btu/lbm)
2.30175	4.5194131E+04	646.36	0.00	1175.70
2.40124	4.4466339E+04	645.15	0.00	1175.70
2.50163	4.3818315E+04	644.56	0.00	1175.70
2.60110	4.3241249E+04	643.98	0.00	1175.70
2.70114	4.2713371E+04	643.36	0.00	1175.70
2.80168	4.2204445E+04	642.87	0.00	1175.70
2.90107	4.1720541E+04	642.57	0.00	1175.70
3.00139	4.1246706E+04	642.48	0.00	1175.70
3.10145	4.0783182E+04	642.53	0.00	1175.70
3.20114	4.0343865E+04	642.61	0.00	1175.70
3.30119	3.9933129E+04	642.50	0.00	1175.70
3.40127	3.9576939E+04	642.21	0.00	1175.70
3.50170	3.9223318E+04	641.40	0.00	1175.70
3.60107	3.8980889E+04	638.54	0.00	1175.70
3.70199	3.8850339E+04	635.63	0.00	1175.70
3.80146	3.8773539E+04	632.86	0.00	1175.70
3.90127	3.8735175E+04	630.16	0.00	1175.70
4.00131	3.8691696E+04	627.56	0.00	1175.70
4.20091	3.8648194E+04	623.11	0.00	1175.70
4.40172	3.8688978E+04	619.44	0.00	1175.70
4.60164	3.8961243E+04	612.36	0.00	1175.70
4.80135	3.9496069E+04	604.95	0.00	1175.70
5.00064	3.9996688E+04	597.49	0.00	1175.70
5.20003	3.2619385E+04	635.27	0.00	1175.70
5.40018	3.3396422E+04	631.40	0.00	1175.70

Table 6.2.1.3-10 (Sheet 3 of 5)
Blowdown DEHL Break
Mass and Energy Releases

Time (sec)	Two-Phase		Steam	
	Mass Flow (lbm/sec)	Average Enthalpy (Btu/lbm)	Mass Flow (lbm/sec)	Enthalpy (Btu/lbm)
5.60030	3.3535612E+04	626.87	0.00	1175.70
5.80024	3.3536109E+04	621.79	0.00	1175.70
6.00050	3.3539833E+04	617.55	0.00	1175.70
6.20071	3.3480513E+04	612.96	0.00	1175.70
6.40041	3.3116853E+04	611.87	0.00	1175.70
6.60070	3.2829941E+04	611.09	0.00	1175.70
6.80066	3.2276303E+04	612.66	0.00	1175.70
7.00012	3.1821538E+04	611.97	0.00	1175.70
7.20077	3.1481152E+04	610.09	0.00	1175.70
7.40195	3.1174078E+04	608.12	0.00	1175.70
7.60202	3.0845163E+04	606.66	0.00	1175.70
7.80324	3.0457254E+04	605.83	0.00	1175.70
8.00088	3.0011559E+04	605.56	0.00	1175.70
8.20197	2.9412544E+04	605.95	0.00	1175.70
8.40194	2.8503385E+04	607.44	0.00	1175.70
8.60004	2.7108284E+04	610.67	0.00	1175.70
8.80080	2.5646875E+04	614.84	0.00	1175.70
9.00254	2.4567453E+04	618.72	0.00	1175.70
9.20111	2.3734022E+04	625.11	0.00	1175.70
9.40041	2.2948447E+04	625.75	0.00	1175.70
9.60145	2.2264465E+04	629.35	0.00	1175.70
9.80270	2.1345812E+04	637.57	0.00	1175.70
10.00134	2.0701374E+04	638.31	0.00	1175.70
10.20182	1.9763504E+04	650.12	0.00	1175.70
10.20367	1.9754964E+04	650.21	0.00	1175.70

Table 6.2.1.3-10 (Sheet 4 of 5)
Blowdown DEHL Break
Mass and Energy Releases

Time (sec)	Two-Phase		Steam	
	Mass Flow (lbm/sec)	Average Enthalpy (Btu/lbm)	Mass Flow (lbm/sec)	Enthalpy (Btu/lbm)
10.40170	1.8972361E+04	651.65	0.00	1175.70
10.60000	1.8098140E+04	664.95	0.00	1175.70
10.80010	1.7185009E+04	670.29	0.00	1175.70
11.00204	1.6448122E+04	684.57	0.00	1175.70
11.20050	1.5413417E+04	700.86	0.00	1175.70
11.40159	1.4795759E+04	706.65	0.00	1175.70
11.60189	1.3770572E+04	734.17	0.00	1175.70
11.80214	1.3005983E+04	742.10	0.00	1175.70
12.00084	1.2196029E+04	773.31	0.00	1175.70
12.20180	1.1199467E+04	807.86	0.00	1175.70
12.40173	1.0564109E+04	818.12	0.00	1175.70
12.60042	9.6889715E+03	870.24	0.00	1175.70
12.80116	8.7223448E+03	923.39	0.00	1175.70
13.00011	7.9349069E+03	951.19	0.00	1175.70
13.20029	7.7003327E+03	924.64	0.00	1175.70
13.40046	7.0267400E+03	962.01	0.00	1175.70
13.60018	6.5913280E+03	984.03	0.00	1175.70
13.80054	6.3863751E+03	962.75	0.00	1175.70
14.00007	6.1411967E+03	989.03	0.00	1175.70
14.20060	5.6037212E+03	1032.55	0.00	1175.70
14.40098	5.2091092E+03	1049.52	0.00	1175.70
14.60003	5.2400852E+03	988.43	0.00	1175.70
14.80020	4.8129799E+03	1042.80	0.00	1175.70
15.00047	4.4143954E+03	1078.20	0.00	1175.70
15.20047	4.0928075E+03	1101.17	0.00	1175.70

Table 6.2.1.3-10 (Sheet 5 of 5)
Blowdown DEHL Break
Mass and Energy Releases

Time (sec)	Two-Phase		Steam	
	Mass Flow (lbm/sec)	Average Enthalpy (Btu/lbm)	Mass Flow (lbm/sec)	Enthalpy (Btu/lbm)
15.40040	4.0730341E+03	1036.73	0.00	1175.70
15.60041	3.6883949E+03	1117.78	0.00	1175.70
15.80063	3.2664683E+03	1182.02	0.00	1175.70
16.00039	2.9907188E+03	1207.15	0.00	1175.70
16.20005	2.7847928E+03	1220.90	0.00	1175.70
16.40089	2.5640037E+03	1228.55	0.00	1175.70
16.60062	2.3707725E+03	1233.97	0.00	1175.70
16.80023	2.2017889E+03	1238.45	0.00	1175.70
17.00050	2.0386489E+03	1242.27	0.00	1175.70
17.20017	1.8646346E+03	1245.21	0.00	1175.70
17.40063	1.6920100E+03	1247.03	0.00	1175.70
17.60104	1.5257772E+03	1248.88	0.00	1175.70
17.80003	1.3706741E+03	1250.77	0.00	1175.70
18.00000	1.2540191E+03	1249.41	0.00	1175.70
18.20064	1.1533549E+03	1251.39	0.00	1175.70
18.40001	9.8416016E+02	1259.51	0.00	1175.70
18.60052	8.2114511E+02	1265.36	0.00	1175.70
18.80084	6.7216213E+02	1268.83	0.00	1175.70
19.00052	5.0509715E+02	1273.94	0.00	1175.70
19.20017	3.0559956E+02	1280.30	0.00	1175.70
19.40074	1.3560178E+02	1282.56	0.00	1175.70
19.60010	.0000000E+00	.00	0.00	1175.70

Table 6.2.1.4-1 Not Used

Table 6.2.1.4-2 (Sheet 1 of 5)
Mass and Enthalpy Release Data for the Case of Main Steam Line Full Double Ended Rupture from 30% Power Level with Faulted Loop Main Steam Line Isolation Valve Failure that Produces Highest Containment Pressure

Initial steam generator mass (lbm)	: 164530
Mass added by feedwater flashing (lbm)	: 10390
Mass added from initial steam line header blowdown (lbm)	: 9970
Initial steam pressure (psia)	: 976.5
Feedwater line isolation at (sec)	: 7.92
Steam line isolation at (sec)	: 7.92

Time (sec)	Mass (lbm/sec)	Enthalpy (Btu/lbm)
0.0	0	1189
0.1	17840	1189
0.2	17392	1190
0.4	16795	1190
0.7	16001	1191
0.9	15517	1191
1.3	14637	1192
1.4	5327	1192
1.5	5327	1192
3.3	5072	1194
4.4	4932	1196
5.5	4807	1197
7.5	4604	1198
8.7	4521	1199
8.8	2286	1199
11.0	2185	1200
15.3	1980	1202
17.5	1882	1202
19.7	1789	1203
21.9	1703	1203
24.0	1627	1204

Table 6.2.1.4-2 (Sheet 2 of 5)
Mass and Enthalpy Release Data for the Case of Main Steam Line Full Double Ended Rupture from 30% Power Level with Faulted Loop Main Steam Line Isolation Valve Failure that Produces Highest Containment Pressure

Time (sec)	Mass (lbm/sec)	Enthalpy (Btu/lbm)
26.2	1551	1204
28.4	1481	1204
30.5	1419	1204
32.7	1358	1204
36.1	1273	1204
38.7	1214	1204
41.3	1161	1204
43.9	1111	1204
46.5	1065	1204
49.1	1023	1204
51.7	984	1204
54.4	946	1204
57.0	912	1203
59.6	881	1203
62.2	852	1203
64.8	825	1203
67.5	800	1202
72.7	755	1202
78.0	716	1201
83.2	682	1201
88.5	651	1200
93.7	625	1200
99.0	601	1199
104.2	580	1199
109.5	560	1198
114.7	542	1198

Table 6.2.1.4-2 (Sheet 3 of 5)
Mass and Enthalpy Release Data for the Case of Main Steam Line Full Double Ended Rupture from 30% Power Level with Faulted Loop Main Steam Line Isolation Valve Failure that Produces Highest Containment Pressure

Time (sec)	Mass (lbm/sec)	Enthalpy (Btu/lbm)
120.0	526	1197
125.2	510	1197
135.7	483	1196
141.0	471	1195
151.5	448	1195
162.0	429	1194
172.5	412	1193
183.0	397	1193
193.5	384	1192
204.0	373	1191
214.4	363	1191
224.9	354	1191
235.4	346	1190
245.9	339	1190
266.9	326	1189
287.9	315	1188
308.9	305	1188
329.9	297	1187
350.9	289	1187
371.9	282	1186
413.9	270	1186
455.8	259	1185
497.7	249	1184
581.7	230	1183
623.7	220	1182
665.7	210	1181

Table 6.2.1.4-2 (Sheet 4 of 5)
Mass and Enthalpy Release Data for the Case of Main Steam Line Full Double Ended Rupture from 30% Power Level with Faulted Loop Main Steam Line Isolation Valve Failure that Produces Highest Containment Pressure

Time (sec)	Mass (lbm/sec)	Enthalpy (Btu/lbm)
707.6	201	1180
740.5	189	1183
757.0	183	1185
765.2	179	1186
773.4	175	1188
781.6	170	1190
785.7	167	1191
789.8	163	1192
793.9	159	1194
798.0	154	1195
802.1	148	1197
806.2	142	1199
811.7	132	1201
814.5	128	1203
816.5	124	1204
818.6	119	1205
820.7	114	1207
822.7	109	1208
826.8	97	1211
833.0	79	1215
833.3	78	1215
833.4	78	1215
833.5	76	1215
833.7	75	1216
834.0	72	1216
835.0	65	1217

Table 6.2.1.4-2 (Sheet 5 of 5)
Mass and Enthalpy Release Data for the Case of Main Steam Line Full Double Ended Rupture from 30% Power Level with Faulted Loop Main Steam Line Isolation Valve Failure that Produces Highest Containment Pressure

Time (sec)	Mass (lbm/sec)	Enthalpy (Btu/lbm)
835.5	61	1217
836.0	57	1218
836.5	53	1218
837.0	48	1218
837.2	46	1218
837.6	42	1219
837.7	42	1219
837.8	40	1219
837.9	40	1219
838.0	37	1219
838.1	38	1219
838.2	35	1219
838.3	36	1219
838.4	32	1219
838.5	33	1219
838.6	29	1219
838.7	30	1219
838.8	26	1219
838.9	25	1219
839.0	23	1219
839.1	20	1220
839.2	0	1150
1000.0	0	1150

Table 6.2.1.4-3 Not Used

Table 6.2.1.4-4
Plant Data Used for Mass and Energy Releases Determination

Plant data for all cases:	
Power, Nominal Rating (MWt)	3415
Nominal RCS Flow (GPM)	299,880
Nominal Full Load T_{avg} (°F)	573.6
Nominal RCS Pressure (psia)	2250
Nominal Steam Temperature (°F)	525.0
Nominal Feedwater Enthalpy (BTU/lbm)	419.3

Table 6.2.1.5-1 (Sheet 1 of 3)
Minimum Containment Pressure Mass and Energy Releases

Time (sec)	Mass Release (lbm/s)	Energy Release (BTU/s)
0.00	8048.80	4167084
0.50	57353.59	29590134
1.00	55005.49	28459890
1.50	52270.23	27143131
2.00	45818.80	23911847
2.50	40552.88	21238707
3.00	35593.76	18686030
3.50	31914.45	16783283
4.00	29784.90	15589765
4.50	28709.72	14998047
5.00	27586.29	14406259
5.50	25600.61	13417019
6.00	23864.42	12587926
6.50	22163.83	11750443
7.00	20713.23	11001374
7.50	19408.78	10369133
8.00	18043.54	9723079
8.50	16763.18	9137172
9.00	15845.12	8692219
9.50	15083.13	8272394
10.00	15095.14	8068458
10.50	14612.10	7748769
11.00	14451.26	7596588
11.50	14577.73	7558015
12.00	13902.09	7199530
12.50	13233.19	6871044
13.00	12329.50	6425770

Table 6.2.1.5-1 (Sheet 2 of 3)
Minimum Containment Pressure Mass and Energy Releases

Time (sec)	Mass Release (lbm/s)	Energy Release (BTU/s)
13.50	11496.19	6015711
14.00	10810.17	5675010
14.50	10242.59	5395077
15.00	9748.16	5140974
15.50	9413.90	4932896
16.00	9217.57	4774288
16.50	9160.19	4671156
17.00	8988.02	4541615
17.50	8647.66	4367756
18.00	8095.50	4141443
18.50	7792.72	3991404
19.00	7287.82	3785419
19.50	6383.36	3493081
20.00	5976.54	3304023
20.50	5697.54	3160302
21.00	5179.90	2960478
21.50	4823.76	2783870
22.00	4714.63	2647153
22.50	4528.89	2458032
23.00	4239.94	2305475
23.50	3549.63	2080235
24.00	3564.29	2037115
24.50	3556.37	1902678
25.00	3457.20	1779022
25.50	3283.33	1644613
26.00	3005.74	1567032
26.50	2766.47	1439366
27.00	2913.81	1359147

Table 6.2.1.5-1 (Sheet 3 of 3)
Minimum Containment Pressure Mass and Energy Releases

Time (sec)	Mass Release (lbm/s)	Energy Release (BTU/s)
27.50	2596.37	1241769
28.00	2735.01	1223341
28.50	2801.99	1216721
29.00	2514.82	1066887
29.50	2166.51	1002084
30.00	2357.82	967204
30.50	2270.68	831612
31.00	2053.97	802888
31.50	2072.48	750472
32.00	2027.79	699692
32.50	1971.58	675788
33.00	1873.58	674471
33.50	1756.97	686106
34.00	1789.48	677109
34.50	1582.86	611478
35.00	1510.34	573832
35.50	1559.28	565846
36.00	1378.92	514559
36.50	1220.64	457942
37.00	1124.18	360695
37.50	1108.51	350376
38.00	996.97	364514
38.50	832.57	326368
39.00	741.62	296555
39.50	631.04	266795
40.00	527.58	237904

Table 6.2.2-1
Passive Containment Cooling System Performance Parameters

PCCWST useable capacity for PCS (gal) - Minimum	756,700
PCCWST useable capacity for FPS(2) (gal) - Minimum	18,000
Flow duration from PCCWST (days) - Minimum	3
PCCWST minimum temperature (°F)	40
PCCWST maximum temperature (°F)	120
Upper annulus drain rate (per drain) - Minimum	525 gpm
PCCAWST(4) long-term makeup rate to containment - Minimum(7)	100 gpm
PCCAWST long-term makeup to spent fuel pool – Minimum(7)	35 gpm
PCCAWST long-term makeup duration - Minimum	4 days
PCCWST long-term makeup to spent fuel pool – Minimum	118 gpm

PCCWST Water Elevation (Note 3) (feet)	Nominal Design Flow (gpm)	Minimum Design Flow (gpm)	Safety Analysis Flow (gpm)	Wetted Coverage (Note 3) (% of circumference)
27.5	494.6 (Note 5)	471.1	469.1	90
24.1	247.1	238.4	226.6	90
20.3	190.8	184.0	176.3	72.9
16.8	157.1	151.4	144.2	59.6
4.0 (Note 6)	113.1	109.6		
			100.7 @ 72 hours	41.6

Notes:

1. PCCWST = passive containment cooling water storage tank
2. FPS = fire protection system
3. PCCWST Water Elevation corresponds to the nominal standpipe elevations in feet above the tank floor (Reference Plant Elevation 293′-9″, see Figure 3.8.4-2). Wetted coverage is measured as the linear percentage of the containment shell circumference wetted measured at the upper spring line for the safety analysis flow rate conditions.
4. PCCAWST = passive containment cooling ancillary water storage tank
5. The initial nominal design flow is based on the nominal PCCWST water elevation.
6. This elevation is the calculated water level at 72 hours after initiation of PCS flow, based on the minimum design flow rates.
7. These flow rates apply when the plant is not refueling. The minimum makeup flow rates required when the plant is being refueled are 80 gpm to the containment and 50 gpm to the spent fuel pool. The minimum makeup flow rates are adjusted because more decay heat is located in the spent fuel pool. See Subsection 9.1.3 for additional details.

Table 6.2.2-2
Component Data
Passive Containment Cooling System
(Nominal)

Passive Containment Cooling Water Storage Tank	
Volume (gal) - Minimum	756,700
Design temperature (°F)	125
Design pressure (psig)	Atmospheric
Material	Concrete with stainless steel liner
Standpipe Elevations Above Bottom of Tank Floor (Plant Elevation 293′-9″)	
Overflow (ft) – Nominal	28.5
Top standpipe (ft) - Nominal	24.1
Second standpipe (ft) - Nominal	20.3
Third standpipe (ft) - Nominal	16.8
Bottom standpipe (ft)	0.5
Passive Containment Ancillary Cooling Water Storage Tank	
Volume (gal) - Nominal	780,000
Design temperature (°F)	125
Design pressure (psig)	Atmospheric
Material	Carbon steel
Water Distribution Bucket	
Volume (gal) - Nominal	42
Design temperature (°F)	150
Design pressure (psig)	Atmospheric
Material	Stainless steel
Water Distribution Collection Troughs and Weirs	
Design temperature (°F)	N/A
Design pressure (psig)	Atmospheric
Material	Stainless steel
Passive Containment Cooling Recirculation Pump	
Quantity	2
Type	Centrifugal
Design capacity (gpm)	135
Design total differential head (ft)	375

Table 6.2.2-3
Failure Mode and Effects Analysis -
Passive Containment Cooling System Components

Component	Failure Mode	PCS Operation Phase	Effect on System Operation	Failure Detection Method	Remarks
Air-operated butterfly valve PCS-PL-V001A (PCS-PL-V001B and motor-operated valve PCS-PL-V001C analogous)	Failure to open on demand	Passive containment cooling water delivery to containment	Failure blocks flow of containment cooling water through one path of PCS which reduces system redundancy. No safety effect on system operation. Minimum containment cooling requirements will be met by the flow of cooling water through operation of one of three flowpaths.	Valve position indication (closed to open position change) in main control room and at the remote shutdown workstation	Valve is normally closed during power operations. Valve opens on actuation by a Hi-2 containment pressure signal or loss of air or loss of 1E power.
Motor-operated gate valve PCS-PL-V002A (PCS-PL-V002B and PCS-PL-V002C analogous)	Spurious valve closure	Passive containment cooling water delivery to containment	Spurious closure blocks flow of containment cooling water through associated flowpath of PCS which reduces system redundancy. No safety effect on system operation. Minimum containment cooling requirements will be met by the flow of cooling water through operation of one of three flowpaths.	Valve position indication (open to closed position change) in main control room and at the remote shutdown workstation	Valve is normally open during power operations. Valve receives confirmatory open signal on Hi-2.
Air-operated butterfly valve PCS-PL-V001A (PCS-PL-V001B and motor-operated valve PCS-PL-V001C analogous)	Spurious valve opening	Normal idle condition	Failure initiates flow of containment cooling water through associated flow path of PCS when not required. No safety effect on system operation. Flow will be terminated through operator action by closing the series isolation valves via the main control room.	Valve position indication (closed to open) in main control room or at the remote shutdown workstation. Also by PCS flow indication and decreasing PCCWST level.	Valve is normally closed during power operations to isolate PCS water.

Table 6.2.3-1 (Sheet 1 of 4)
Containment Mechanical Penetrations and Isolation Valves

	Containment Penetration			Isolation Device						Test		
System	Line	Flow	Closed Sys IRC	Valve/Hatch Identification	Pipe Length	DCD Subsection	Position N-S-A	Signal	Closure Times	Type[1] & Note	Medium	Direction
CAS	Service air in	In	No	CAS-PL-V204 CAS-PL-V205	9 -	9.3.1	C-O-C C-O-C	None None	N/A N/A	C,5	Air	Forward
	Instrument air in	In	No	CAS-PL-V014 CAS-PL-V015	9 -	9.3.1	O-O-C O-O-C	T None	std. N/A	C,5	Air	Forward
CCS	IRC loads in	In	No	CCS-PL-V200 CCS-PL-V201	9 -	9.2.2	O-O-C O-O-C	S, HRCP None	std. N/A	C,5	Air	Forward
	IRC loads out	Out	No	CCS-PL-V208 CCS-PL-V207 CCS-PL-V220	8 - -	9.2.2	O-O-C O-O-C C-C-C	S, HRCP S, HRCP None	std. std. N/A	C,5	Air	Forward
CVS	Spent resin flush out	Out	No	CVS-PL-V041 CVS-PL-V040 CVS-PL-V042	19 - 21	9.3.6	C-C-C C-C-C C-C-C	None None None	N/A N/A N/A	C	Air	Forward
	Letdown	Out	No	CVS-PL-V047 CVS-PL-V045 CVS-PL-V058	36 - -	9.3.6	C-O-C C-O-C C-C-C	T T None	std. std. N/A	C	Air	Forward Forward Reverse
	Charging	In	No	CVS-PL-V090 CVS-PL-V091 CVS-PL-V100	31 - -	9.3.6	C-O-C C-O-C C-C-C	HR, PL2, S+PL1, SGL HR, PL2, S+PL1, SGL None	std. std. N/A	C	Air	Forward
	H2 injection to RCS	In	No	CVS-PL-V092 CVS-PL-V094	22 -	9.3.6	O-C-C C-C-C	T None	std. N/A	C	Air	Forward
DWS	Demin. water supply	In	No	DWS-PL-V244 DWS-PL-V245	28 -	9.2.4	C-O-C C-O-C	None None	N/A N/A	C,5	Air	Forward
FHS	Fuel transfer	N/A	No	FHS-FT-01	-	6.2.5	C-O-C	None	N/A	B	Air	Forward
FPS	Fire protection standpipe sys.	In	No	FPS-PL-V050 FPS-PL-V052	57 -	9.5.1	C-C-C C-C-C	None None	N/A N/A	C,5	Air	Forward
PSS	RCS/PSX/CVS samples out	Out	No	PSS-PL-V011 PSS-PL-V010A,B	13 -, -	9.3.3	C-C-C C-C-C	T T	std. std.	C	Air	Forward
	Cont. air samples out	Out	No	PSS-PL-V046 PSS-PL-V008	13 -	9.3.3	O-C-C O-C-C	T T	std. std.	C	Air	Forward
	RCS/Cont. air sample return	In	No	PSS-PL-V023 PSS-PL-V024	16 -	9.3.3	O-C-C O-C-C	T None	std. N/A	C	Air	Forward

Table 6.2.3-1 (Sheet 2 of 4)
Containment Mechanical Penetrations and Isolation Valves

	Containment Penetration			Isolation Device						Test		
System	Line	Flow	Closed Sys IRC	Valve/Hatch Identification	Pipe Length	DCD Subsection	Position N-S-A	Signal	Closure Times	Type[1] & Note	Medium	Direction
PXS	N_2 to accumulators	In	No	PXS-PL-V042 PXS-PL-V043	9 -	6.3	O-O-C C-C-C	T None	std. N/A	C	Air	Forward
RNS	RCS to RHR pump	Out	No	RNS-PL-V002A/B RNS-PL-V023 RNS-PL-V022 RNS-PL-V021 RNS-PL-V061 PXS-PL-V208A	- - 42 - - -	5.4.7 5.4.7 5.4.7 5.4.7 5.4.7 6.3	C-O-C C-O-C C-O-C C-C-C C-O-C C-C-C	HR, S HR, S HR, S None T None	std. std. std. N/A std. N/A	6 C C,4 C C C	Air	-- Forward Forward Forward Forward Forward
	RHR pump to RCS	In	No	RNS-PL-V011 RNS-PL-V013	25 -	5.4.7	C-O-C C-O-C	HR, S None	std. N/A	C,4 C,4	Air	Forward
SFS	IRWST/Ref. cav. SFP pump discharge	In	No	SFS-PL-V038 SFS-PL-V037	20 -	9.1.3	C-O-C C-O-C	T None	std. N/A	C,5	Air	Forward
	IRWST/Ref. cav. purif. out	Out	No	SFS-PL-V035 SFS-PL-V034 SFS-PL-V067	31 - -	9.1.3	C-O-C C-O-C C-C-C	T T None	std. std. N/A	C,5	Air	Forward
SGS	Main steam line 01	Out	Yes	SGS-PL-V040A SGS-PL-V027A(7) SGS-PL-V030A,31A,32A,33A,34A,35A SGS-PL-V036A SGS-PL-V240A	29 67 11, 14, 18, 21, 23, 27 39 44	10.3	O-C-C O-O-C C-C-C O-O-C C-C-C	MS LSL None MS MS	5 sec std. N/A std. std.	A,2	N2	Forward
	Main steam line 02	Out	Yes	SGS-PL-V040B SGS-PL-V027B(7) SGS-PL-V030B,31B,32B,33B,34B,35B SGS-PL-V036B SGS-PL-V240B	29 67 11, 14, 18, 21, 23, 27 39 44	10.3	O-C-C O-O-C C-C-C O-O-C C-C-C	MS LSL None MS MS	5 sec std. N/A std. std.	A,2	N2	Forward
	Main feedwater 01	In	Yes	SGS-PL-V057A	23	10.3	O-C-C	MF	5 sec	A,2	H2O	Forward
	Main feedwater 02	In	Yes	SGS-PL-V057B	23	10.3	O-C-C	MF	5 sec	A,2	H2O	Forward
	SG blowdown 01	Out	Yes	SGS-PL-V074A	14	10.3	O-O-C	PRHR	std.	A,2	H2O	Forward
	SG blowdown 02	Out	Yes	SGS-PL-V074B	13	10.3	O-O-C	PRHR	std.	A,2	H2O	Forward
	Startup feedwater 01	In	Yes	SGS-PL-V067A	28	10.3	C-O-C	LTC, SGL	std.	A,2	H2O	Forward
	Startup feedwater 02	In	Yes	SGS-PL-V067B	27	10.3	C-O-C	LTC, SGL	std.	A,2	H2O	Forward

Table 6.2.3-1 (Sheet 3 of 4)
Containment Mechanical Penetrations and Isolation Valves

	Containment Penetration			Isolation Device						Test		
System	Line	Flow	Closed Sys IRC	Valve/Hatch Identification	Pipe Length	DCD Subsection	Position N-S-A	Signal	Closure Times	Type[1] & Note	Medium	Direction
VFS	Cont. air filter supply	In	No	VFS-PL-V003 VFS-PL-V004	33 -	9.4.7	C-O-C C-O-C	T,HR,DAS T,HR,DAS	10 sec 10 sec	C,5	Air	Forward Forward
	Cont. air filter exhaust	Out	No	VFS-PL-V010 VFS-PL-V009 VFS-PL-V008 VFS-PL-V800A VFS-PL-V800B VFS-PL-V803A VFS-PL-V803B	65 - - 84 82 25 21	9.4.7	C-O-C C-O-C C-C-C C-C-C C-C-C C-C-C C-C-C	T,HR,DAS T,HR,DAS N/A T, HR (Note 8) T, HR (Note 8) None None	10 sec 10 sec N/A 30 sec 30 sec N/A N/A	C,5,9	Air	Forward Forward Forward
VWS	Fan Coolers out	Out	No	VWS-PL-V086 VWS-PL-V082 VWS-PL-V080	9 - -	9.2.7	O-O-C O-O-C C-C-C	T T None	std. std. N/A	C,3,4,5	Air	Forward
	Fan coolers in	In	No	VWS-PL-V058 VWS-PL-V062	9 -	9.2.7	O-O-C O-O-C	T N/A	std. std.	C,3,4,5	Air	Forward
WLS	Reactor coolant drain tank gas	Out	No	WLS-PL-V068 WLS-PL-V067	49 -	11.2	C-C-C C-C-C	T T	std. std.	C	Air	Forward
	Normal cont. sump	Out	No	WLS-PL-V057 WLS-PL-V055 WLS-PL-V058	39 - -	11.2	C-C-C C-C-C C-C-C	T,DAS T,DAS None	std. std. N/A	C	Air	Forward
SPARE		N/A	No	P40	-	6.2.5	C-C-C	N/A	N/A	B	Air	Forward
SPARE		N/A	No	P41	-	6.2.5	C-C-C	N/A	N/A	B	Air	Forward
SPARE		N/A	No	P42	-	6.2.5	C-C-C	N/A	N/A	B	Air	Forward
CNS	Main equipment hatch	N/A	No	CNS-MY-Y01	-	6.2.5	C-C-C	None	N/A	B	Air	Forward
	Maintenance hatch	N/A	No	CNS-MY-Y02	-	6.2.5	C-C-C	None	N/A	B	Air	Forward
	Personnel hatch	N/A	No	CNS-MY-Y03	-	6.2.5	C-C-C	None	N/A	B	Air	Forward
	Personnel hatch	N/A	No	CNS-MY-Y04	-	6.2.5	C-C-C	None	N/A	B	Air	Forward
PCS	Containment pressure instrumentation lines (four)	N/A	Yes	P46, P47, P48, P49	-	6.2.3.1	N/A	N/A	N/A	A,10	Capillary Fluid	Forward

Table 6.2.3-1 (Sheet 4 of 4)
Containment Mechanical Penetrations and Isolation Valves

Explanation of Heading and Acronyms for Table 6.2.3-1

System:	Fluid system penetrating containment		Closure Time:		
Containment Penetration:	These fields refer to the penetration itself		Required valve closure stroke time		
Line:	Fluid system line		std:	Industry standard for valve type (≤ 60 seconds)	
Flow:	Direction of flow in or out of containment		N/A:	Not Applicable	
Closed Sys IRC:	Closed system inside containment as defined in Subsection 6.2.3.1.1		Test:	These fields refer to the penetration testing requirements	
Isolation Device:	These fields refer to the isolation devices for a given penetration		Type:	Required test type	
Valve/Hatch ID:	Identification number on P&ID or system figure			A:	Integrated Leak Rate Test
Pipe Length:	Nominal length of pipe to outboard containment isolation valve, feet			B:	Local Leak Rate Test -- penetration
Subsection Containing Figure:	Safety analysis report containing the system P&ID or figure			C:	Local Leak Rate Test -- fluid systems
Position N-S-A:	Device position for N (normal operation)		Note:	See notes below	
	S	(shutdown)	Medium:	Test fluid on valve seat	
	A	(post-accident)	Direction:	Pressurization direction	
Signal:	Device closure signal			Forward:	High pressure on containment side
	MS:	Main steam line isolation		Reverse:	High pressure on outboard side
	LSL:	Low steam line pressure			
	MF:	Main feedwater isolation			
	LTC:	Low T_{cold}			
	PRHR:	Passive residual heat removal actuation			
	T:	Containment isolation			
	S:	Safety injection signal			
	HR:	High containment radiation			
	DAS:	Diverse actuation system signal			
	PL2:	High 2 pressurizer level signal			
	S+PL1:	Safety injection signal plus high 1 pressurizer level			
	SGL:	High steam generator level			
	HRCP:	High reactor coolant pump bearing water temperature trip			

Notes:

1. Containment leak rate tests are designated Type A, B, or C according to 10CFR50, Appendix J.
2. The secondary side of the steam generator, including main steam, feedwater, startup feedwater, blowdown and sampling piping from the steam generators to the containment penetration, is considered an extension of the containment. These systems are not part of the reactor coolant pressure boundary and do not open directly to the containment atmosphere during post-accident conditions. During Type A tests, the secondary side of the steam generators is vented to the atmosphere outside containment to ensure that full test differential pressure is applied to this boundary.
3. The central chilled water system remains water-filled and operational during the Type A test in order to maintain stable containment atmospheric conditions.
4. The containment isolation valves for this penetration are open during the Type A test to facilitate testing. Their leak rates are measured separately.
5. The inboard valve flange is tested in the reverse direction.
6. These valves are not subject to a Type C test. Upstream side of RNS hot leg suction isolation valves is not vented during local leak rate test to retain double isolation of RCS at elevated pressure. Valve is flooded during post accident operation.
7. Refer to Table 15.0-4b for PORV block valve closure time.
8. These valves also receive a signal to open on Low-2 containment pressure.
9. Valves V800A/B are tested in the reverse direction. This test method is acceptable per ANSI 56.8 since the test pressure is applied in the conservative direction.
10. The containment pressure instrumentation lines are sealed, fluid-filled, and closed inside and outside the containment, without containment isolation valves. They are not vented or drained during Type A testing.

Table 6.2.4-1
Component Data - Hydrogen Sensors
(Nominal)

Number	3
Range (% hydrogen)	0 - 20
Response time	90% in 10 seconds

Table 6.2.4-2
Component Data - Hydrogen Recombiner
(Nominal)

Number Full Size PAR	2
Average efficiency (percent)	85
Depletion rate	Reference 19

Table 6.2.4-3
Component Data - Hydrogen Igniter
(Nominal)

Number	64
Surface Temperature (°F)	1600 to 1700

Tables 6.2.4-4–6.2.4-5 Not Used

Table 6.2.4-6 (Sheet 1 of 3)
Igniter Location

Criteria

- A sufficient number of igniters are placed in the major transport paths (including dominant natural circulation pathways) of hydrogen so that hydrogen can be burned continuously close to the release point. This prevents hydrogen from preferentially accumulating in a certain region of the containment.
- Igniters (minimum of 2) are located in major regions or compartments where hydrogen may be released, through which it may flow, or where it may accumulate.
- It is preferable to ignite a hydrogen-air mixture at the bottom so that upward flame propagation can be promoted at lean hydrogen concentrations. Igniters within each subcompartment are located in the vicinity of, and above, the highest potential release location within the subcompartment.
- In compartments with relatively small openings in the ceiling, the potential may exist for the hydrogen-air mixture to rise and to collect near the ceiling. Therefore, one or more igniters are placed near the ceiling of such compartments. Igniter coverage is provided within the upper 10 percent of the vertical height subcompartments or 10 feet from the ceiling whichever is less. In cases where the highest potential release point is low in the compartment, both this and the previous criteria are considered.
- To the extent possible, igniters are placed away from walls and other large surfaces so that a flame front created by ignition at the bottom of a compartment can travel unimpeded up to the top.
- A sufficient number of igniters are installed in long, narrow compartments (corridors) so that the flame fronts created by the igniters need to travel only a limited distance before they merge. This limits the potential for significant flame acceleration.
- Igniter coverage is provided to control combustion in areas where oxygen rich air may enter into an inerted region with combustible hydrogen levels during an accident scenario.
- Igniters are located above the flood level, if possible. Those which may be flooded have redundant fuses to protect the power supply.
- In locations where the potential hydrogen release location can be defined, i.e. above the IRWST spargers, at IRWST vents, etc igniter coverage is provided as close to the source as feasible.
- Provisions for installation, maintenance, and testing are to be considered.

Table 6.2.4-6 (Sheet 2 of 3)
Igniter Location

Implementation

- **Reactor Cavity –** Hydrogen releases within the reactor cavity will flow either through the vertical access tunnel, through the opening around the RCS hot and cold legs into the loop compartments or if the refueling cavity seal ring fails then potentially through the refueling cavity. The potential flow paths have at least four igniters with at least two powered by each of two power groups. No igniters have been located within the reactor cavity since this region would always be flooded, adequate igniter coverage is available in hydrogen pathways from the reactor cavity and any maintenance or inspection would result in elevated personnel exposure.
- **Loop Compartments –** Hydrogen releases from the hot or cold legs or from the reactor cavity would flow up through the loop compartment to the dome region. Igniter coverage provided within the loop compartment consists of a total of four igniters at two different elevations covering the perimeter of the compartment and with two igniters powered by one power group and two by the second power group. Additional coverage is provided above the loop compartments at elevation 166′ with four igniters above each loop compartment and powered by different power groups.
- **Pressurizer Compartment –** Hydrogen releases within the pressurizer compartment would flow up through the compartment toward the dome region. Igniter coverage provided within the compartment consists of a total of four igniters at two different elevations covering the perimeter of the compartment with two igniters powered by one power group and two by the second power group. Additional coverage is provided above the pressurizer compartment at elevation 166′ with two igniters above powered by different power groups.
- **Tunnel Connection Loop Compartments –** The tunnel between the loop compartments and extending downward into the reactor coolant drain tank cavity is provided with four igniters for hydrogen control. Releases within the reactor cavity or from the loop compartment may flow through this vertical access tunnel. Igniter coverage is provided over the width of the tunnel at three separate elevations and is powered by different power groups.
- **Refueling Cavity –** Hydrogen releases from the reactor cavity or potentially from the reactor coolant loops may flow up past the refueling cavity seal ring and through the refueling cavity to the dome region. Igniter coverage provided within the refueling cavity consists of a total of four igniters at two different elevations covering the perimeter of the compartment with two igniters powered by one power group and two by the second power group. Additional coverage is provided above the refueling cavity at elevation 166′ with four igniters powered by different power groups.
- **Southeast Valve and Accumulator Rooms –** Hydrogen releases within the southeast valve or accumulator rooms will rise with the mass and energy releases to near the ceiling and exit either through the stairwell on the west wall or through piping penetration holes in the ceiling. The hydrogen control protection is provided by two igniters, one located near the ceiling of each of the adjoining rooms. The igniters are powered by different power groups and provide backup control for each other.

Table 6.2.4-6 (Sheet 3 of 3)
Igniter Location

- **East Valve, Northeast Accumulator, and Northeast Valve Room –** Hydrogen releases within the east valve, northeast accumulator or valve rooms will rise with the mass and energy releases to near the ceiling and exit either through the enlarged vent area surrounding the discharge piping from the core makeup tank located at the 107′ 2″ elevation and through other piping penetration holes in the ceiling. The hydrogen control protection is provided by three igniters, one located near the ceiling of each of the adjoining rooms. The igniters are powered by different power groups and provide backup control for each other.
- **North CVS Equipment Room –** Hydrogen releases within the CVS equipment room will rise from the piping or equipment located on the CVS module to near the ceiling, pass over the outer barrier wall and flow up through the stairwell or ceiling grating. Hydrogen control is provided by two igniters located near the ceiling of the equipment room between the equipment module and the major relief paths from the compartment. The igniters are powered by different power groups.
- **IRWST –** Hydrogen releases into the IRWST are controlled by the distribution of igniters internal to the IRWST and within the vents from and into the IRWST. Two igniters on different power groups are located within the IRWST just below the tank roof of the IRWST and near the spargers. In the event of hydrogen releases via the spargers, the igniters near the release points will provide the most immediate point of recombination. Should the environment within the IRWST be inerted or otherwise not be ignited by the assemblies near the sparger, the hydrogen will be ignited as it exhausts from the IRWST at any of four of the vents fitted with igniter assemblies. Two of the four igniters are powered by one power group and two by the second power group. Finally, in the event that the IRWST is hydrogen rich and air is drawn into the IRWST the mixture will become flammable. In order to provide this recombination, the two inlet vents on the other side of the IRWST from the sparger and primary exhaust vents are each fitted with an igniter.
- **Lower Compartment Area –** Hydrogen releases within the lower compartment will rise with the mass and energy releases to near the ceiling and exit either through the north stairwell or along the circumferential gap between the operating deck and the containment shell. The hydrogen control protection is provided by eleven igniters spread over the potential release areas and located either just above the mezzanine deck elevation or near the ceiling. This approach provides wide coverage over the entire compartment area at two separate elevations. The igniters are split between the two separate power groups.
- **Upper Compartment –** Hydrogen control is provided at three separate levels within the upper compartment. At the 162-166 foot elevations, 10 igniters are distributed over the area primarily above the major release flow paths including the loop compartments, refueling cavity, pressurizer compartment and above the stairwell from the lower compartment area. The igniters are split between the two power groups. At 233 foot elevation, an igniter is provided in each quadrant at the mid region of the upper compartment with two igniters on each of the two power groups. At the upper region elevation of 258 feet, four additional igniters are located to initiate recombination of hydrogen not ignited at either the source or along its flow path. The four igniters are split between the two power groups.

Table 6.2.4-7
Subcompartment/Area Igniter Coverage

	Igniter Coverage (Elevation)[1]	
Subcompartment	**Power Group 1**	**Power Group 2**
Reactor Cavity	1(El 91′) 3 (El 95′) 13, 5, 55 (El 120′) 58 (El 132′) 8, 12 (El 139′)	4 (El 95′) 2 (El 99′) 11, 7, 56 (El 120′) 57 (El 132′) 6, 14 (El 139′)
Loop Compartment 01	13 (El 120′) 12 (El 139′)	11 (El 120′) 14 (El 139′)
Loop Compartment 02	5 (El 120′) 8 (El 139′)	7 (El 120′) 6 (El 139′)
Pressurizer Compartment	49 (El 154′) 60 (El 135′)	50 (El 154′) 59 (El 135′)
Tunnel connecting Loop Compartments	1 (El 91′) 3 (El 95′) 31 (El 120′)	4 (El 95′) 2 (El 99′) 30 (El 120′)
Southeast Valve Room	21 (El 105′)	20 (El 105′)
Southeast Accumulator Room	21 (El 105′)	20 (El 105′)
East Valve Room	18 (El 105′)	19 (El 105′)
Northeast Accumulator Room	18 (El 105′)	17, 19 (El 105′)
Northeast Valve Room	18 (El 105′)	17 (El 105′)
North CVS Equipment Room	34 (El 105′)	33 (El 105′)
Lower Compartment Area (CMT and Valve area)	22 (El 133′) 27, 28, 29, 31, 32 (El 120′)	23, 24, 25 (El 133′) 26, 30 (El 120′)
IRWST Outlets	35, 37 (El 137′)	36, 38 (El 137′)
IRWST Interior	9 (El 133′)	10 (El 133′)
IRWST Inlet	16 (El 133′)	15 (El 133′)
Refueling Cavity	55 (El 120′) 58 (El 132′)	56 (El 120′) 57 (El 132′)
Upper Compartment		
Lower Region	39, 42, 44, 43, 47 (El 166′)	40, 41, 45, 46, 48 (El 162′-166′)
Mid Region	51, 54 (El 233′)	52, 53 (El 233′)
Upper Region	61, 63 (El 258′)	62, 64 (El 258′)

Note:
1. Elevations are approximate.

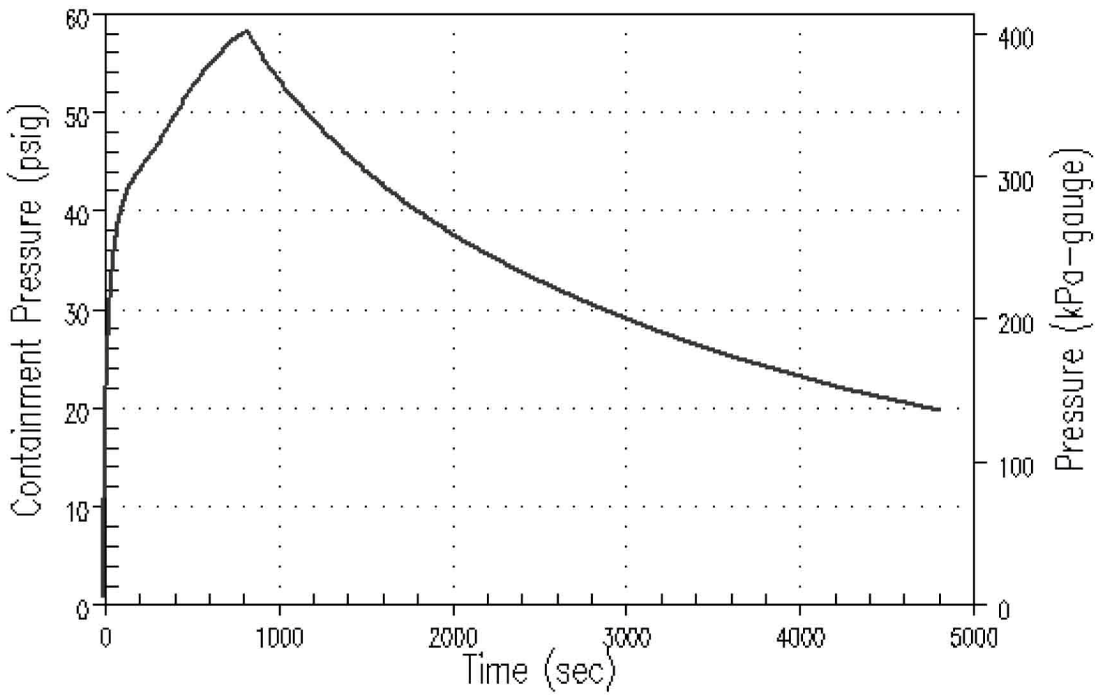

Figure 6.2.1.1-1
AP1000 Containment Response for Full DER MSLB – 30% Power

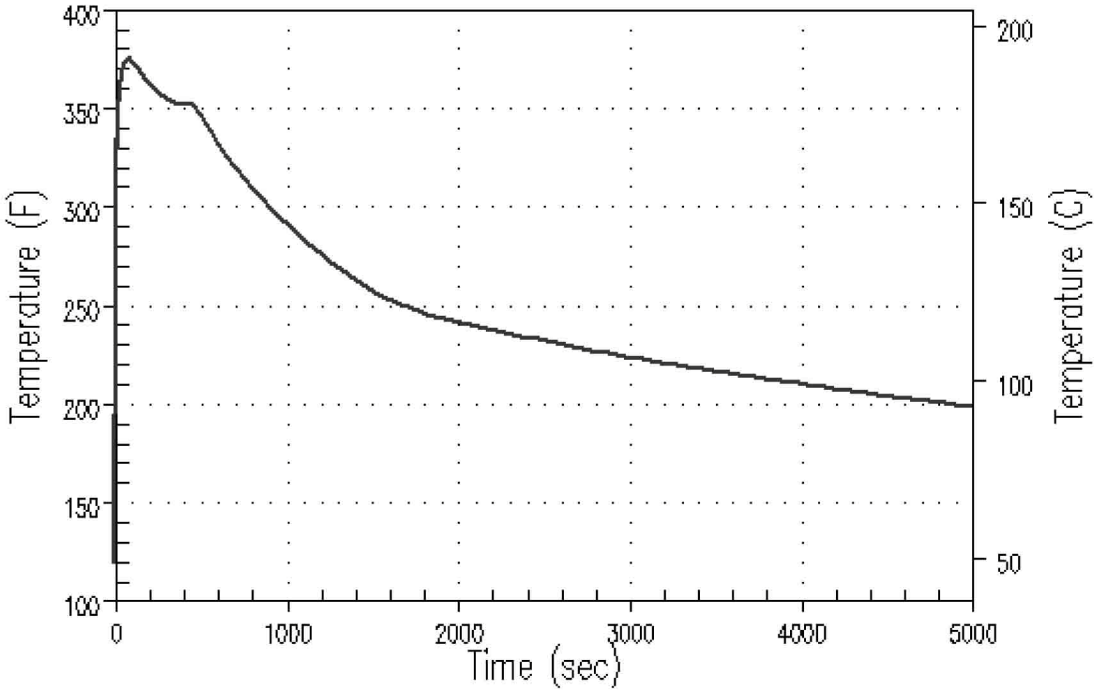

Figure 6.2.1.1-2
AP1000 Containment Response for Full DER MSLB – 101% Power

Figures 6.2.1.1-3–6.2.1.1-4 Not Used

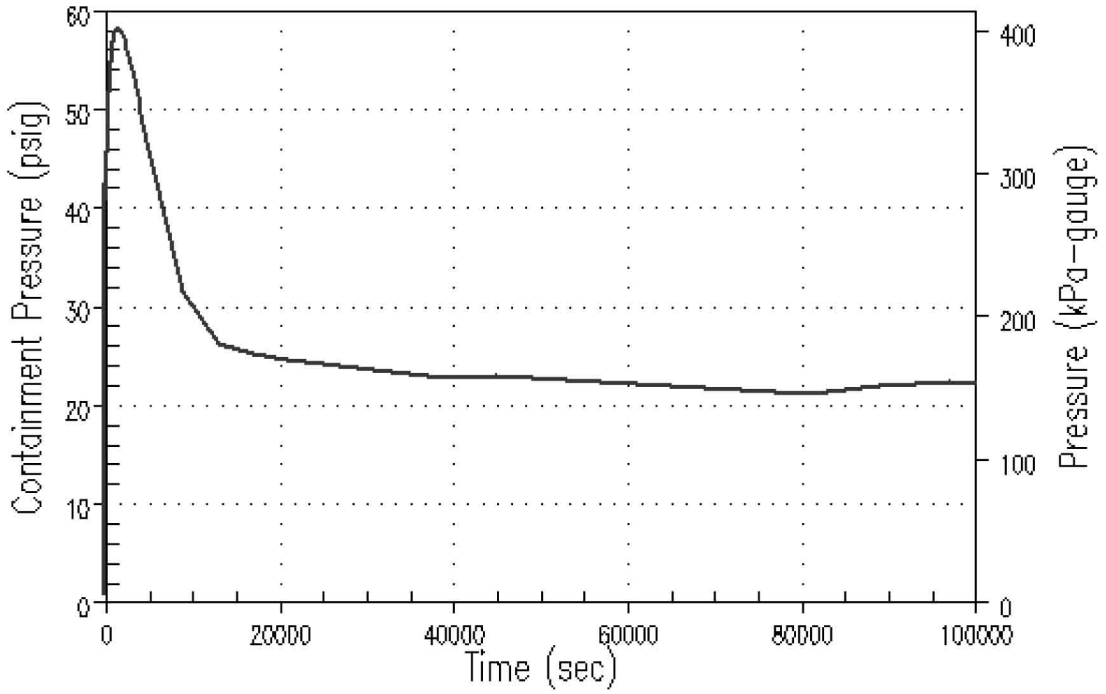

Figure 6.2.1.1-5
AP1000 Containment Pressure Response for DECLG LOCA

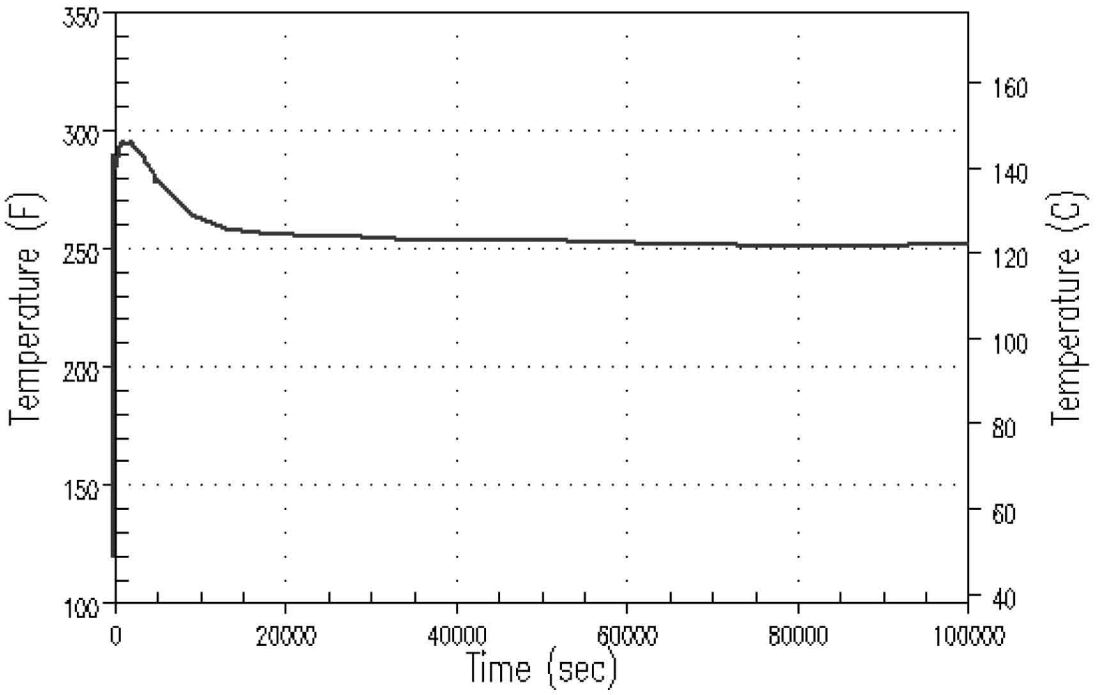

Figure 6.2.1.1-6
AP1000 Containment Temperature Response to DECLG LOCA

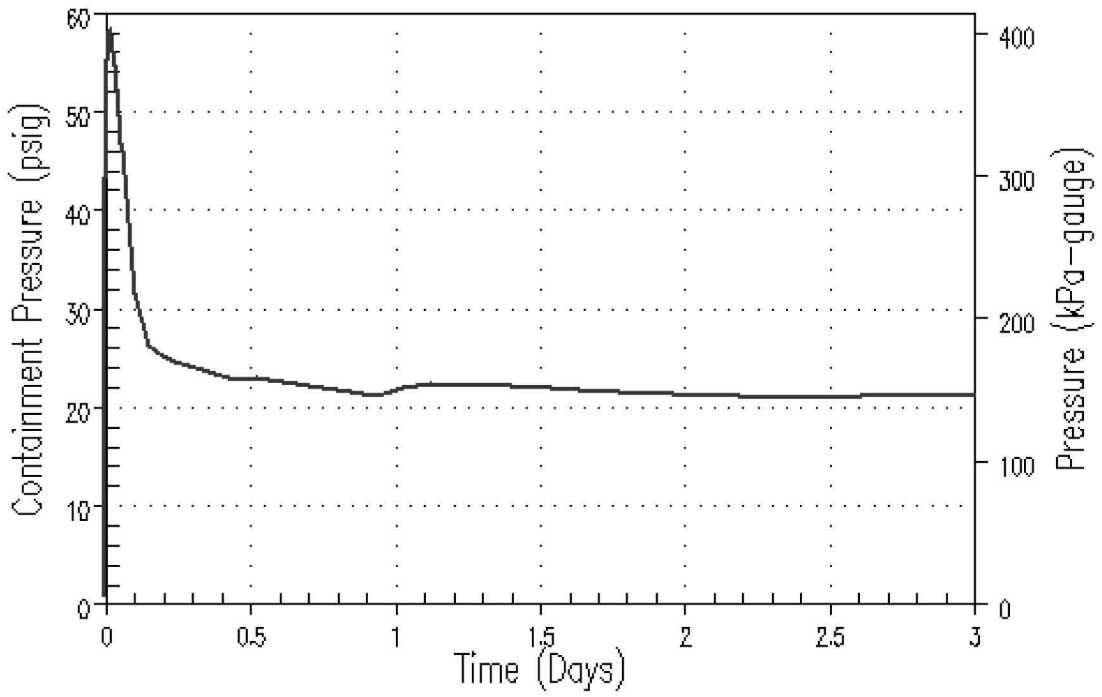

Figure 6.2.1.1-7
AP1000 Containment Pressure Response for DECLG LOCA – 3 Days

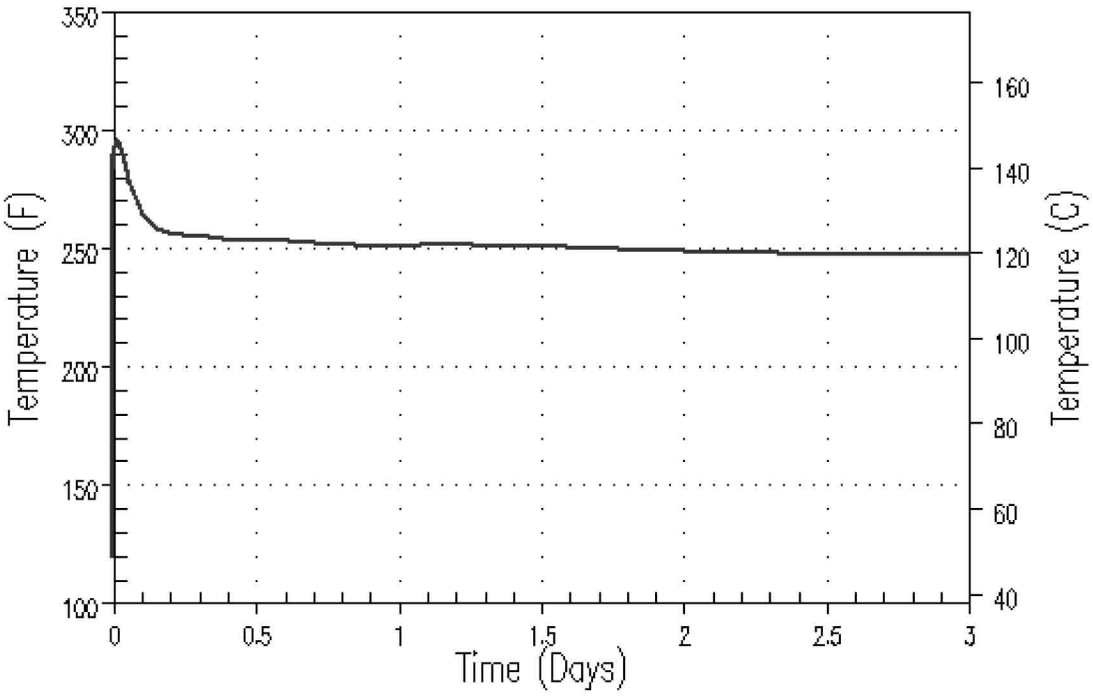

Figure 6.2.1.1-8
AP1000 Containment Temperature Response for DECLG LOCA – 3 Days

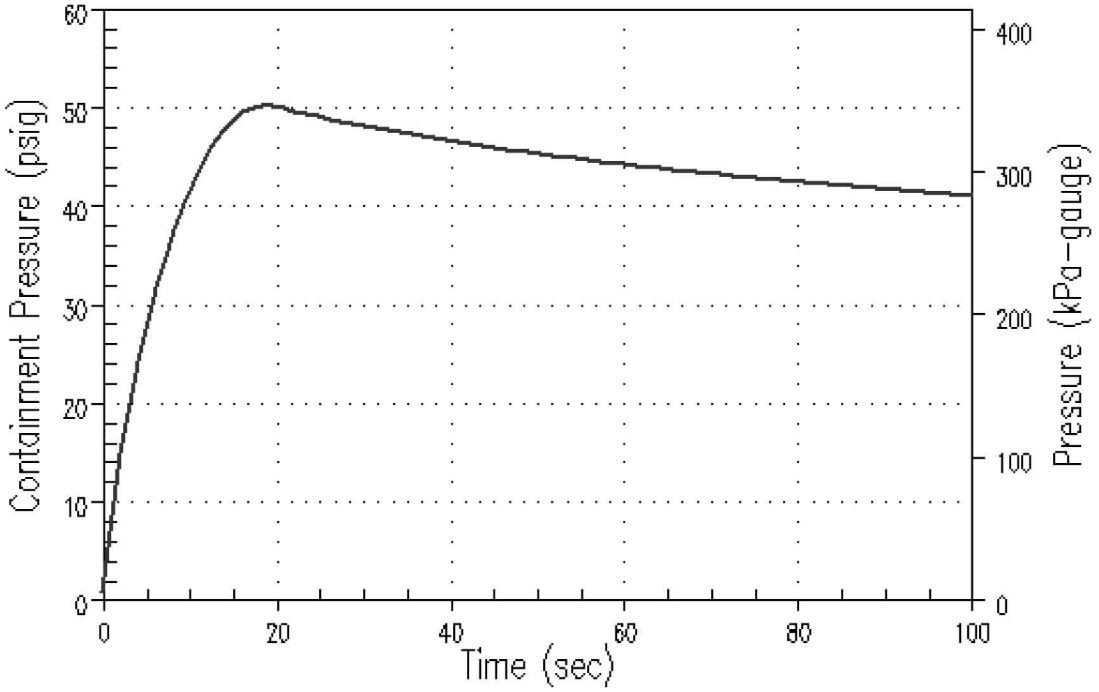

Figure 6.2.1.1-9
AP1000 Containment Pressure Response – DEHLG LOCA

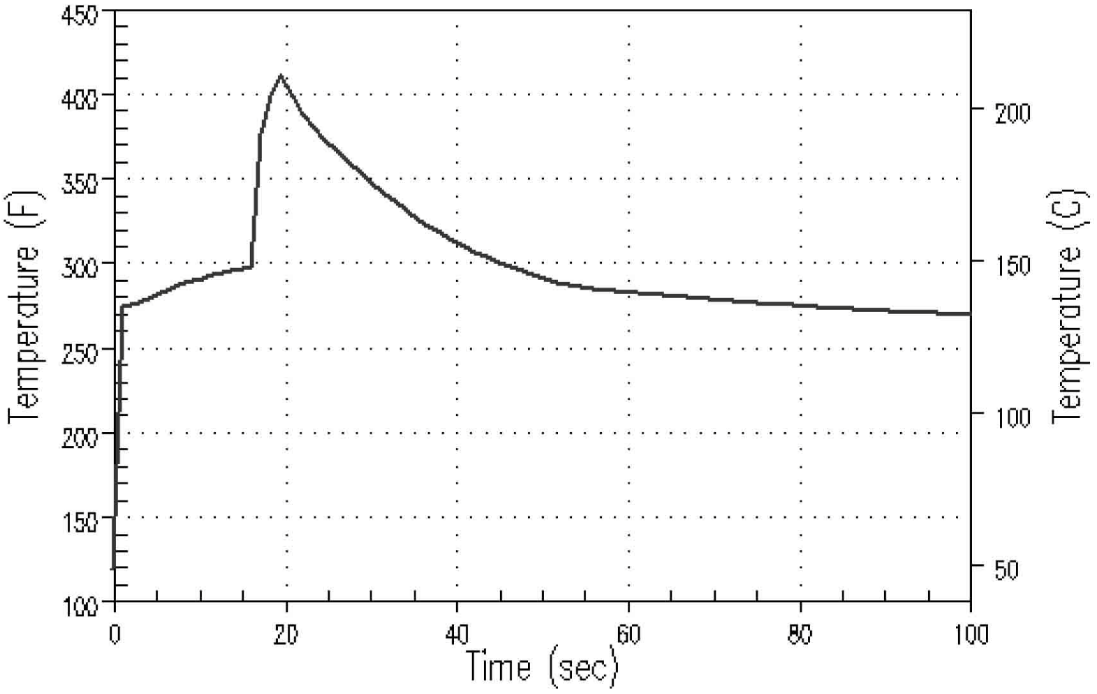

Figure 6.2.1.1-10
AP1000 Containment Response for DEHLG LOCA

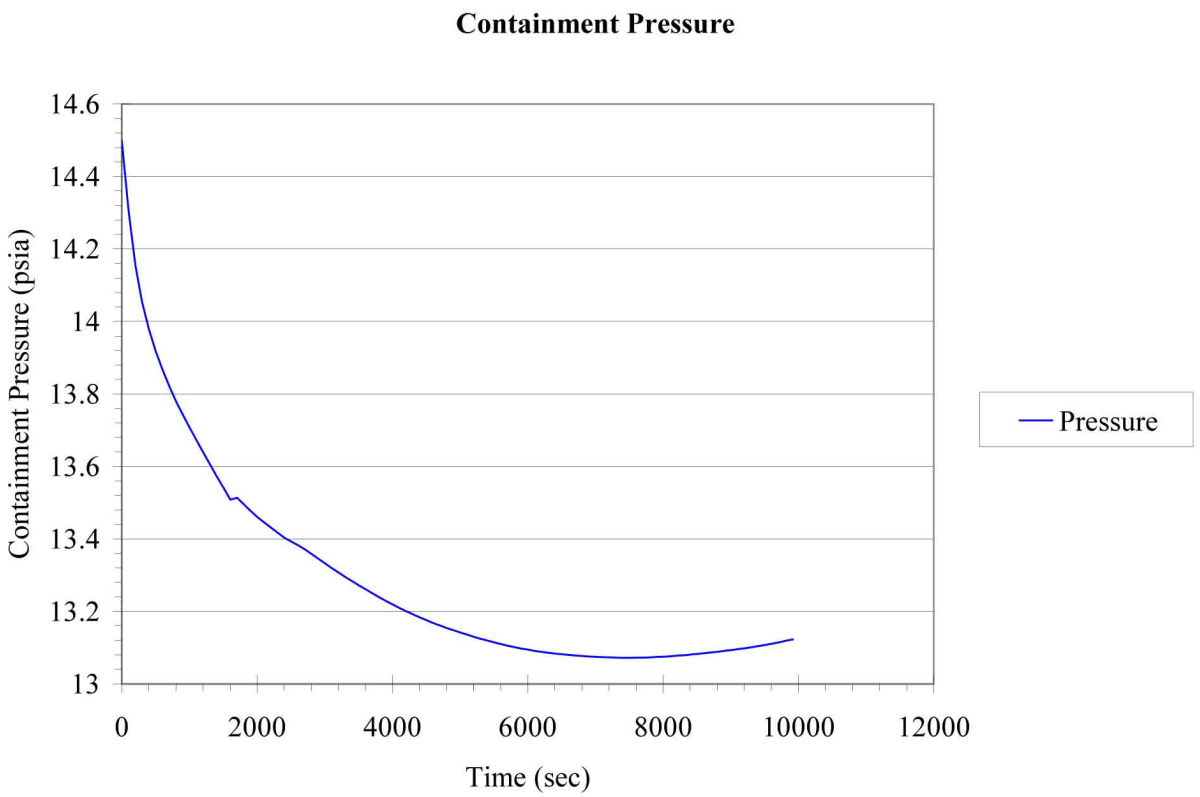

Figure 6.2.1.1-11
AP1000 Design External Pressure Analysis
Containment Pressure vs. Time

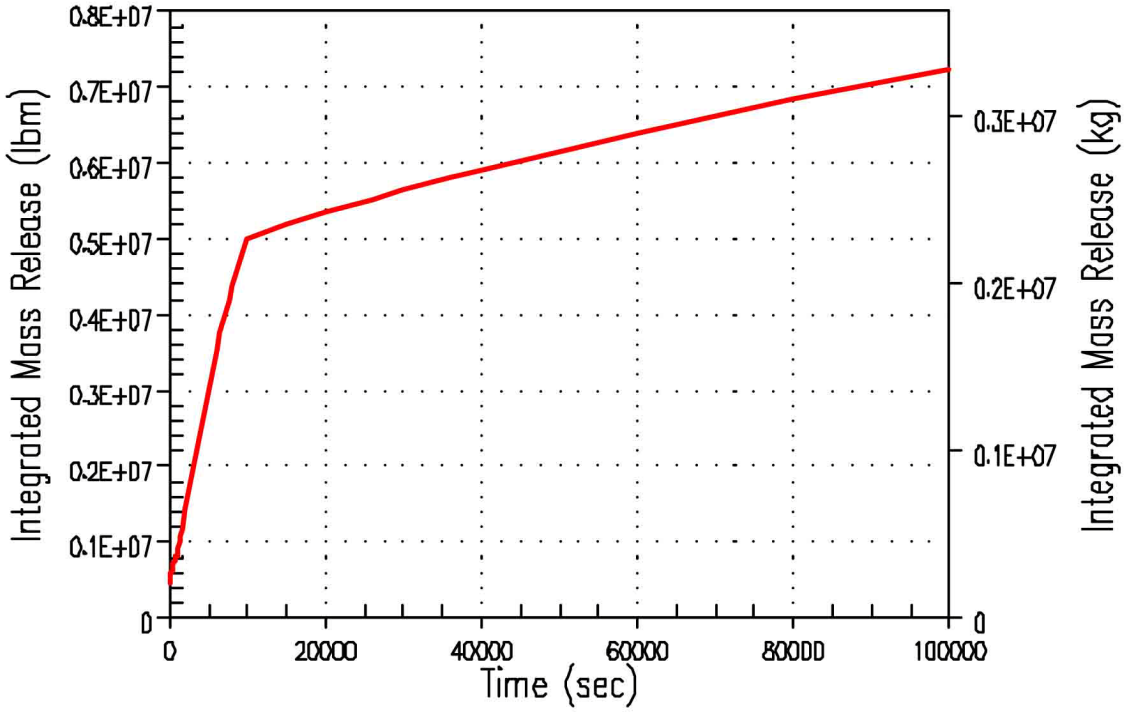

Figure 6.2.1.3-1
AP1000 DECLG Integrated Break Flow

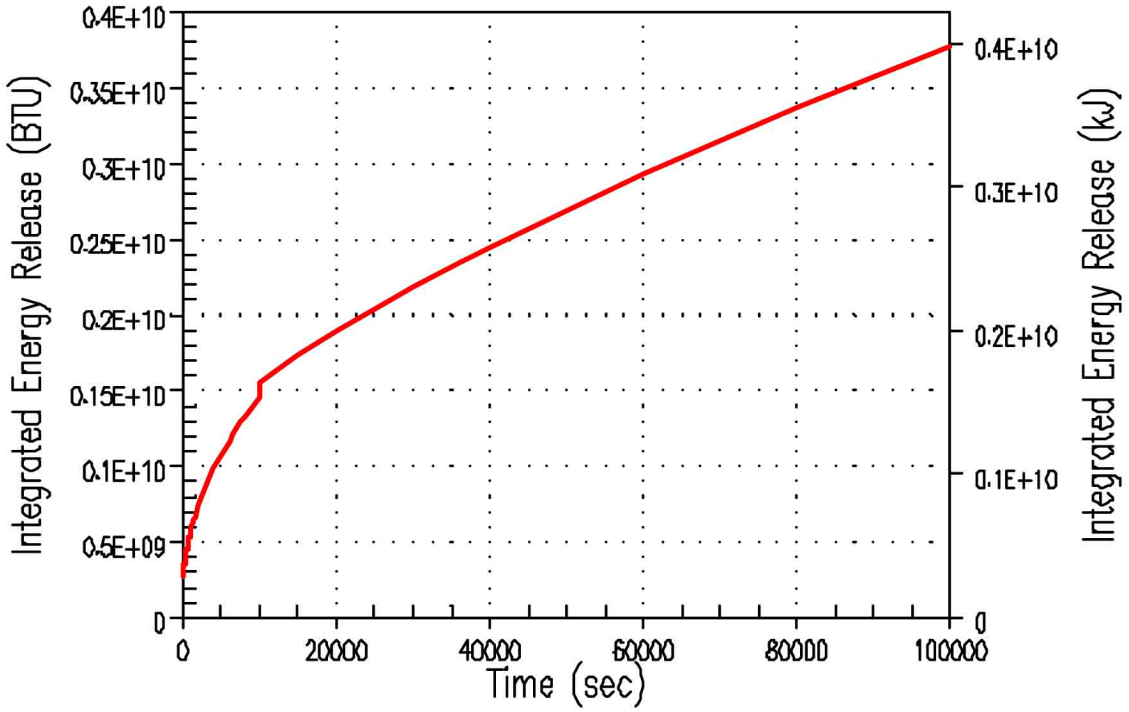

Figure 6.2.1.3-2
AP1000 DECLG LOCA Integrated Energy Released

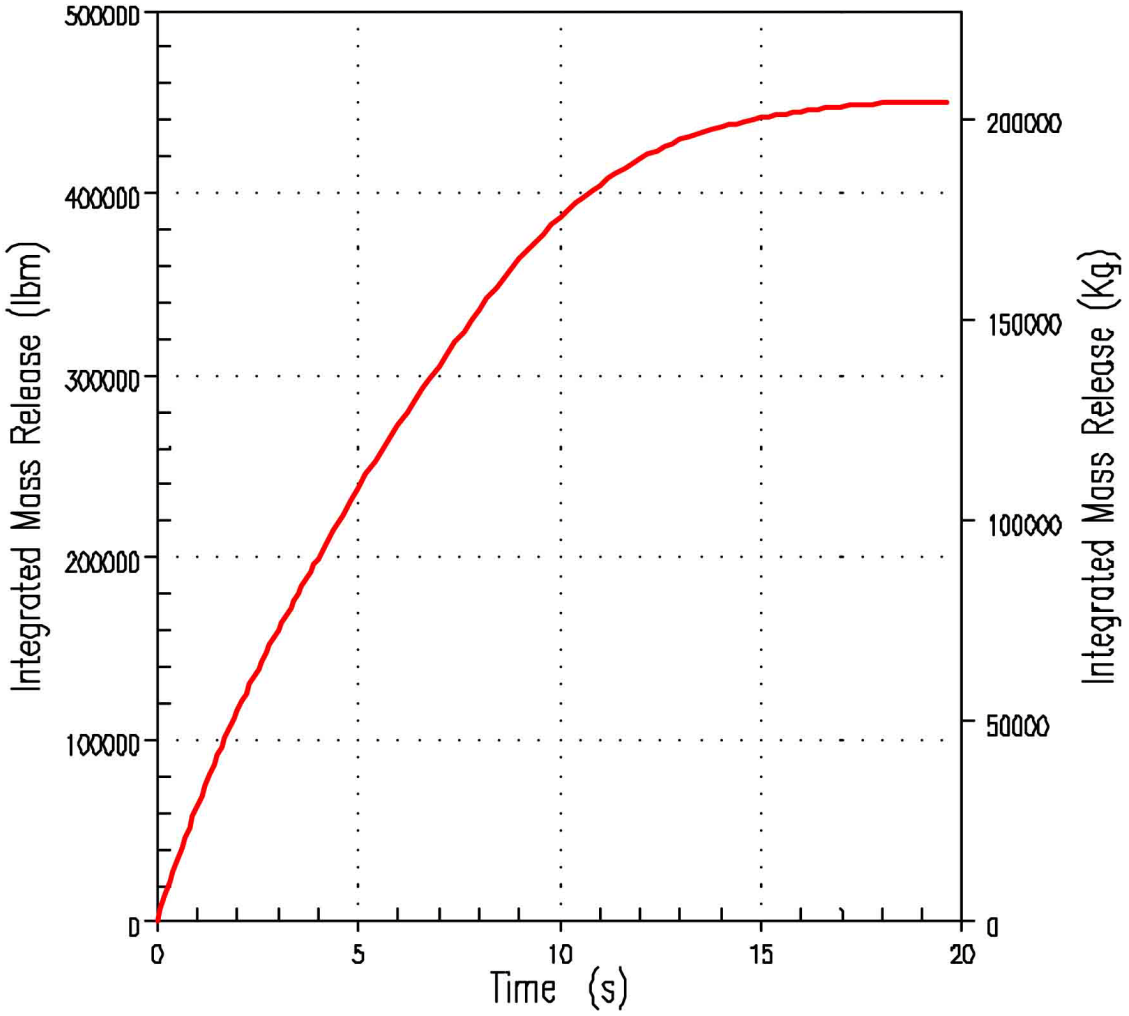

Figure 6.2.1.3-3
AP1000 DEHLG Integrated Break Flow

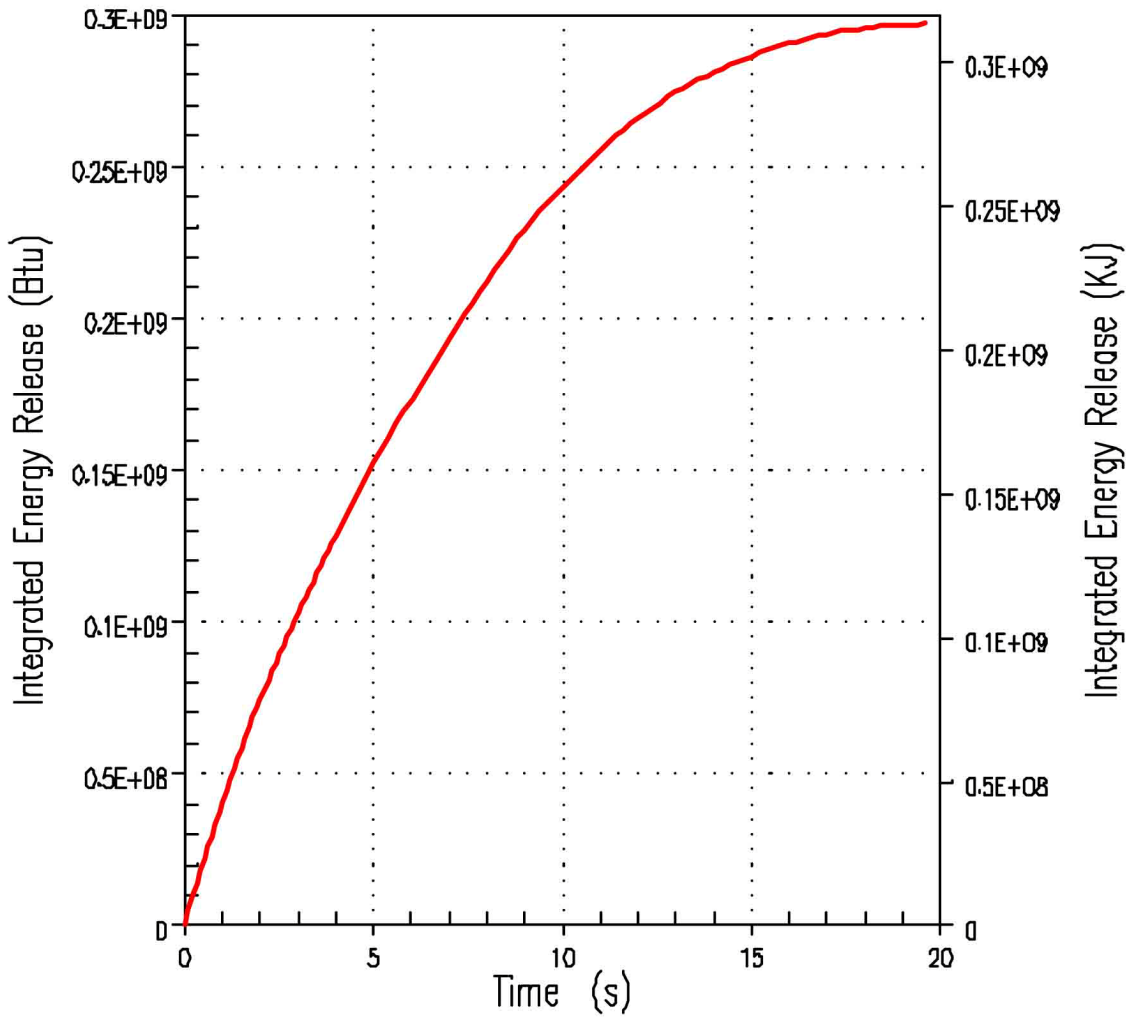

Figure 6.2.1.3-4
AP1000 DEHLG LOCA Integrated Energy Released

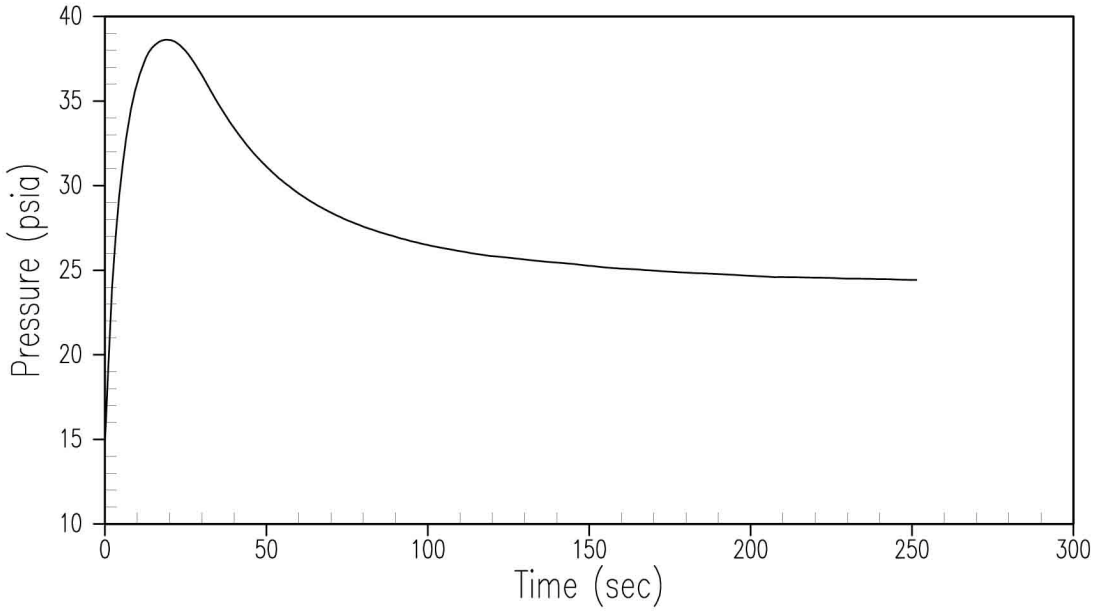

Figure 6.2.1.5-1
AP1000 Minimum Containment Pressure for DECLG LOCA

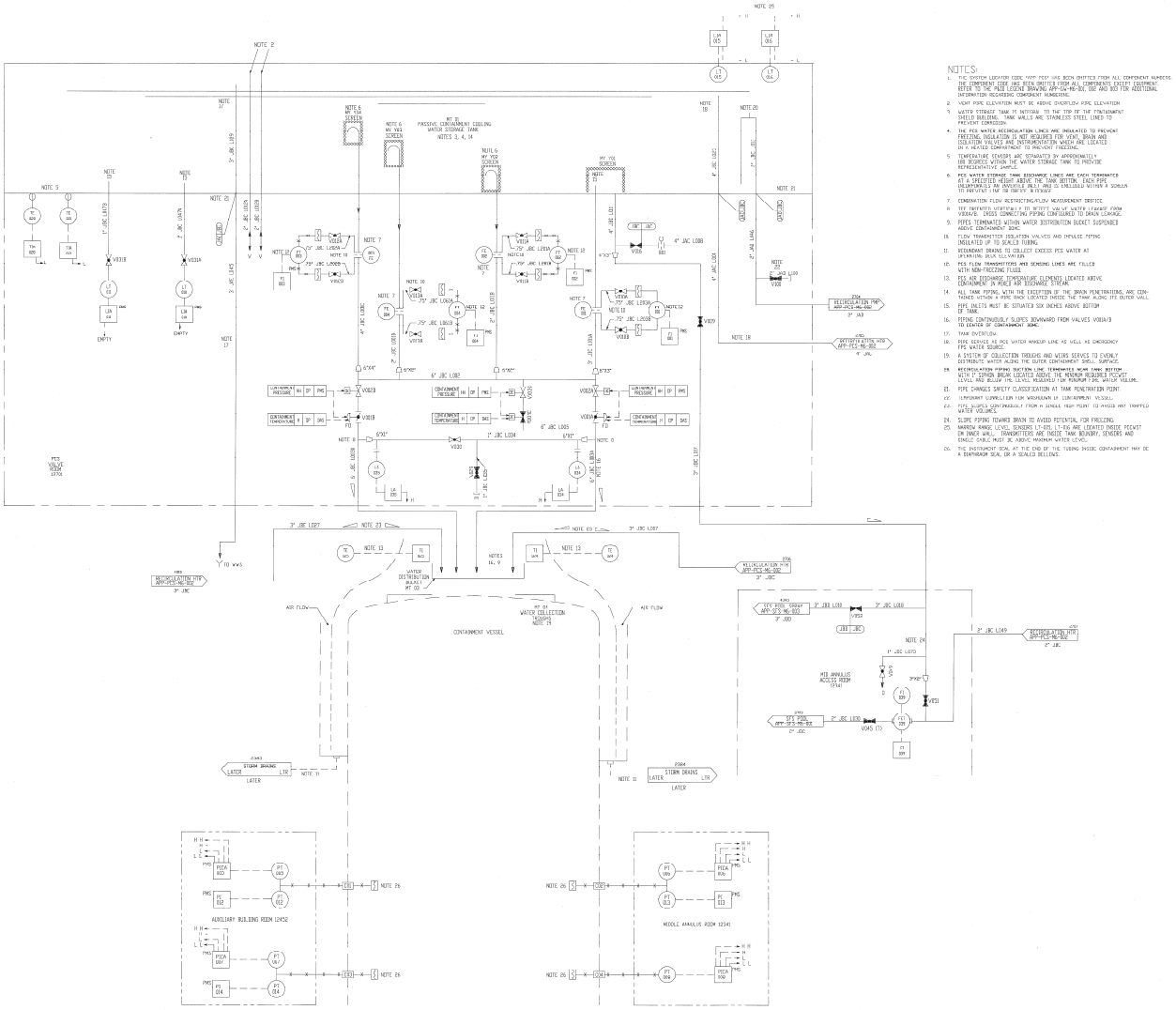
NOTES:
1. THE SYSTEM LOCATION CODE (APP-PCS) HAS BEEN OMITTED FROM ALL COMPONENT NUMBERS. THE COMPONENT CODE HAS BEEN OMITTED FROM ALL COMPONENTS EXCEPT EQUIPMENT. REFER TO THE PNID LOCATED BRAWING APP-CA-MB-001, 002 AND 003 FOR ADDITIONAL INFORMATION REGARDING COMPONENT NUMBERING.
2. VENT PIPE ELEVATION MUST BE ABOVE OVERFLOW PIPE ELEVATION.
3. WATER STORAGE TANK IS INTERNAL TO THE TOP OF THE CONTAINMENT SHIELD BUILDING. TANK WALLS ARE STAINLESS STEEL LINED TO PREVENT CORROSION.
4. THE PCS WATER RECIRCULATION LINES ARE INSULATED TO PREVENT FREEZING. INSULATION IS NOT REQUIRED FOR VENT, DRAIN AND ISOLATION VALVES AND INSTRUMENTATION WHICH ARE LOCATED IN A HEATED COMPARTMENT TO PREVENT FREEZING.
5. TEMPERATURE SENSORS ARE SEPARATED BY APPROXIMATELY 180 DEGREES WITHIN THE WATER STORAGE TANK TO PROVIDE REPRESENTATIVE SAMPLE.
6. PCS WATER STORAGE TANK DISCHARGE LINES ARE EACH TERMINATED AT A SPECIFIED HEIGHT ABOVE THE TANK BOTTOM. EACH PIPE DISCHARGES AN INDIVIDUAL JET, AND IS ENCLOSED WITHIN A SCREEN TO PREVENT FAR OR EMPTY STORAGE.
7. CONDENSATION FLOW RESTRICTING/FLOW MEASUREMENT ORIFICE.
8. TYP INDICATES VERTICAL + (T) WITH VALVE WATER FLOWS FROM V08A/B. CROSS CONNECTING PIPING CONFIGURED TO DRAIN LEAKAGE.
9. PIPES TERMINATED WITHIN WATER DISTRIBUTION BUCKET SUSPENDED ABOVE CONTAINMENT DOME.
10. FLOW TRANSMITTER ISOLATION VALVES AND IMPULSE PIPING INSULATED UP TO SEALED TUBING.
11. REDUNDANT DRAINS TO COLLECT EXCESS PCS WATER AT INSTRUMENT BUS ELEVATION.
12. PCS FLOW TRANSMITTERS AND SENSING LINES ARE FILLED WITH NON-FREEZING FLUID.
13. PCS AIR DISCHARGE TEMPERATURE ELEMENTS LOCATED ABOVE CONTAINMENT IN MAIN AIR DISCHARGE STREAM.
14. ALL TANK PIPING, WITH THE EXCEPTION OF THE DRAIN PENETRATIONS, ARE CONTAINED WITHIN A PIPE SHACK LOCATED INSIDE THE TANK ALONG ITS OUTER WALL.
15. PIPE INLETS MUST BE SITUATED SIX INCHES ABOVE BOTTOM OF TANK.
16. PIPING CONTINUOUSLY SLOPES DOWNWARD FROM VALVES V08A/B TO CENTER OF CONTAINMENT DOME.
17. TANK OVERFLOW.
18. PIPE SERVICE AS PCS WATER MAKEUP LINE AS WELL AS EMERGENCY FPS WATER SOURCE.
19. A SYSTEM OF COLLECTION TROUGHS AND WEIRS SERVES TO EVENLY DISTRIBUTE WATER ALONG THE OUTER CONTAINMENT SHELL SURFACE.
20. RECIRCULATION PIPING SUCTION LINE TERMINATES NEAR TANK BOTTOM WITH 1" SIPHON BREAK LOCATED ABOVE THE MINIMUM REQUIRED PCS WATER LEVEL AND BELOW FPS LEVEL REQUIRED FOR MINIMUM 2 DAY WATER VOLUME.
21. PIPE CHANGES SAFETY CLASSIFICATION AT TANK PENETRATION POINT.
22. COMPONENT SUPPORTED FOR VIBRATION IN CONTAINMENT VESSEL.
23. PIPE SLOPES GENTLY FROM A SINGLE HIGH POINT TO AVOID ANY TRAPPED WATER VOLUMES.
24. SLOPE PIPING TOWARD DRAIN TO AVOID POTENTIAL FOR FREEZING.
25. NARROW RANGE LEVEL SENSORS LT-07L, LT-09L ARE LOCATED INSIDE PCS WST ON INNER WALL. TRANSMITTERS ARE INSIDE TANK BOUNDARY. SENSORS AND SINGLE CABLE MUST BE ABOVE MAXIMUM WATER LEVEL.
26. THE INSTRUMENT SEAL AT THE END OF THE TUBING INSIDE CONTAINMENT MAY BE A DIAPHRAGM SEAL OR A SEALED BELLOWS.
NOTE 2
NOTE 25
NOTE 5
NOTE 21
NOTE 18
NOTE 20
NOTE 7
NOTE 10
NOTE 12
NOTE 13
NOTE 23
NOTE 24
NOTE 11
NOTE 26
NOT TO PASSIVE CONTAINMENT COOLING WATER STORAGE TANK NOTES 3, 4, 14
WATER DISTRIBUTION BUCKET NT 02
WATER COLLECTION TROUGHS NOTE 19
CONTAINMENT VESSEL
AIR FLOW
AUXILIARY BUILDING ROOM 12452
MIDDLE ANNULUS ROOM 12341
STORM DRAINS
LATER
EMPTY
RECIRCULATION PMP
RECIRCULATION PIPE
FPS PIPE
V08A (T)
V08B (T)
V09A
V09B
V09C
V09D
V09E
V09F
V09G
V09H
V09I
V09J
V09K
V09L
V09M
V09N
V09O
V09P
V09Q
V09R
V09S
V09T
V09U
V09V
V09W
V09X
V09Y
V09Z
V09AA
V09AB
V09AC
V09AD
V09AE
V09AF
V09AG
V09AH
V09AI
V09AJ
V09AK
V09AL
V09AM
V09AN
V09AO
V09AP
V09AQ
V09AR
V09AS
V09AT
V09AU
V09AV
V09AW
V09AX
V09AY
V09AZ

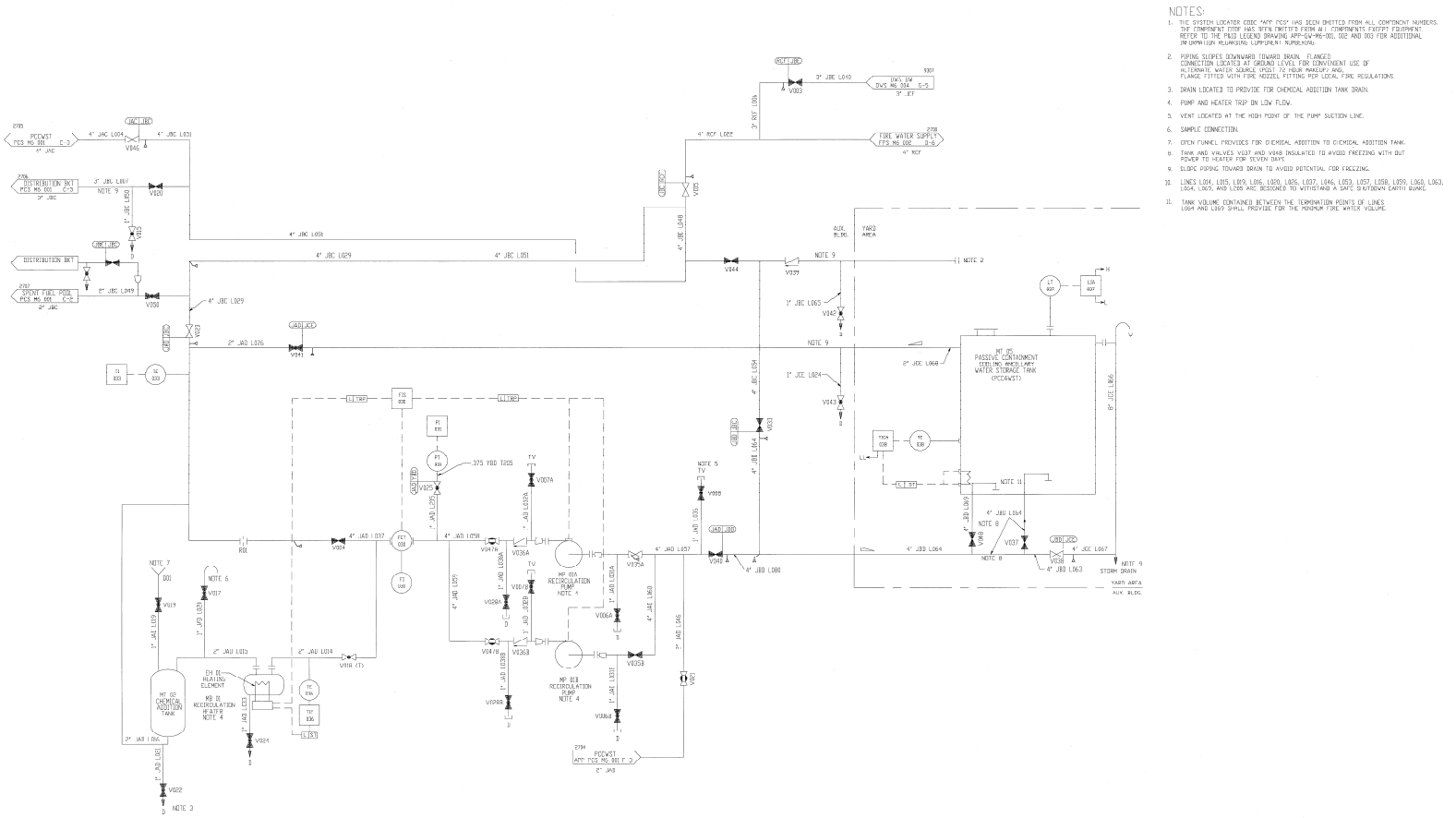

Figure 6.2.2-1 (Sheet 2 of 2)
Passive Containment Cooling System
Piping and Instrumentation Diagram
(REF) PCS 002

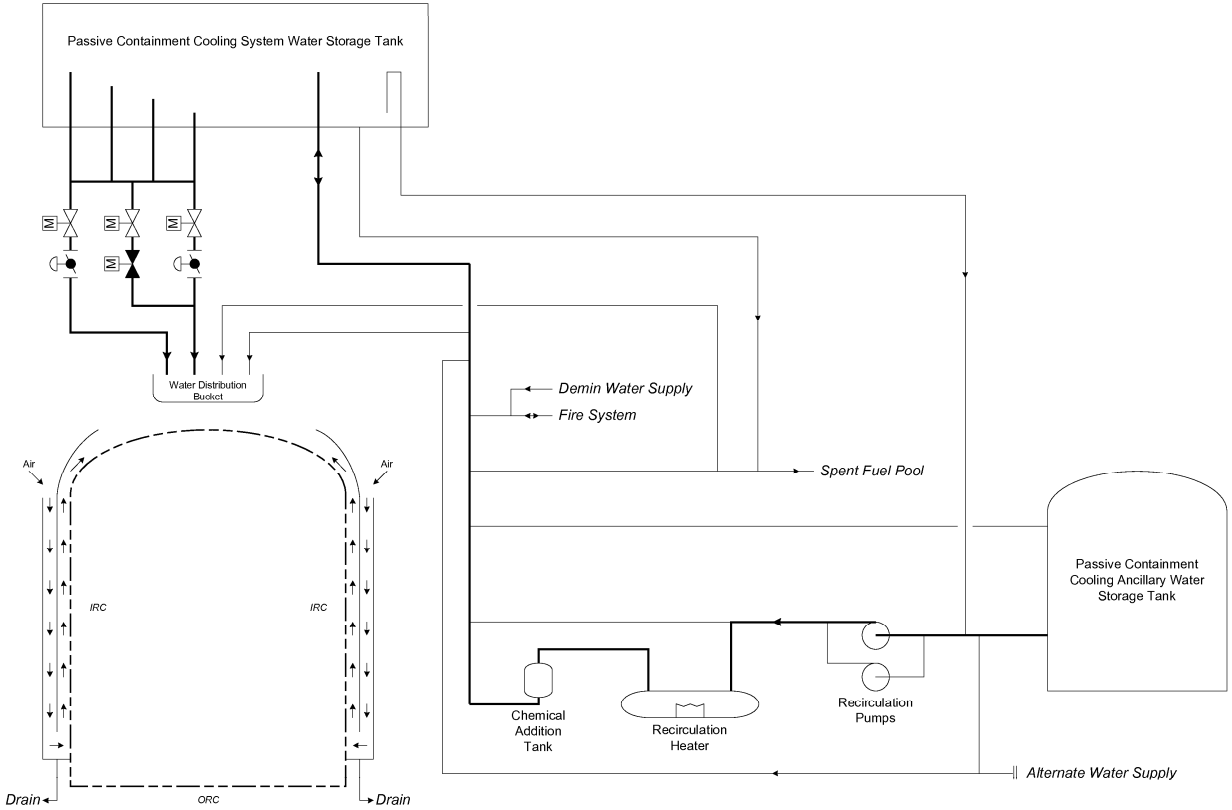

Figure 6.2.2-2
Simplified Sketch of Passive Containment Cooling System

Figures 6.2.4-1–6.2.4-4 Not Used

Security-Related Information, Withheld Under 10 CFR 2.390d

Figure 6.2.4-5
Hydrogen Igniter Locations – Section View

Security-Related Information, Withheld Under 10 CFR 2.390d

Figure 6.2.4-6
Hydrogen Igniter Locations
Plan View Elevation 82′-6″

Security-Related Information, Withheld Under 10 CFR 2.390d

Figure 6.2.4-7
Hydrogen Igniter Locations – Section View

Security-Related Information, Withheld Under 10 CFR 2.390d

Figure 6.2.4-8
Hydrogen Igniter Locations
Plan View Elevation 96′-6″

Security-Related Information, Withheld Under 10 CFR 2.390d

Figure 6.2.4-9
Hydrogen Igniter Locations
Plan View Elevation 118′-6″

Security-Related Information, Withheld Under 10 CFR 2.390d

Figure 6.2.4-10
Hydrogen Igniter Locations
Plan View Elevation 135′-3″

Security-Related Information, Withheld Under 10 CFR 2.390d

Figure 6.2.4-11
Hydrogen Igniter Locations
Plan View Elevation 162′-0″

Security-Related Information, Withheld Under 10 CFR 2.390d

Figure 6.2.4-12
Hydrogen Igniter Locations
Plan View Elevation 210′-0″

Security-Related Information, Withheld Under 10 CFR 2.390d

Figure 6.2.4-13
Hydrogen Igniter Locations Section A-A

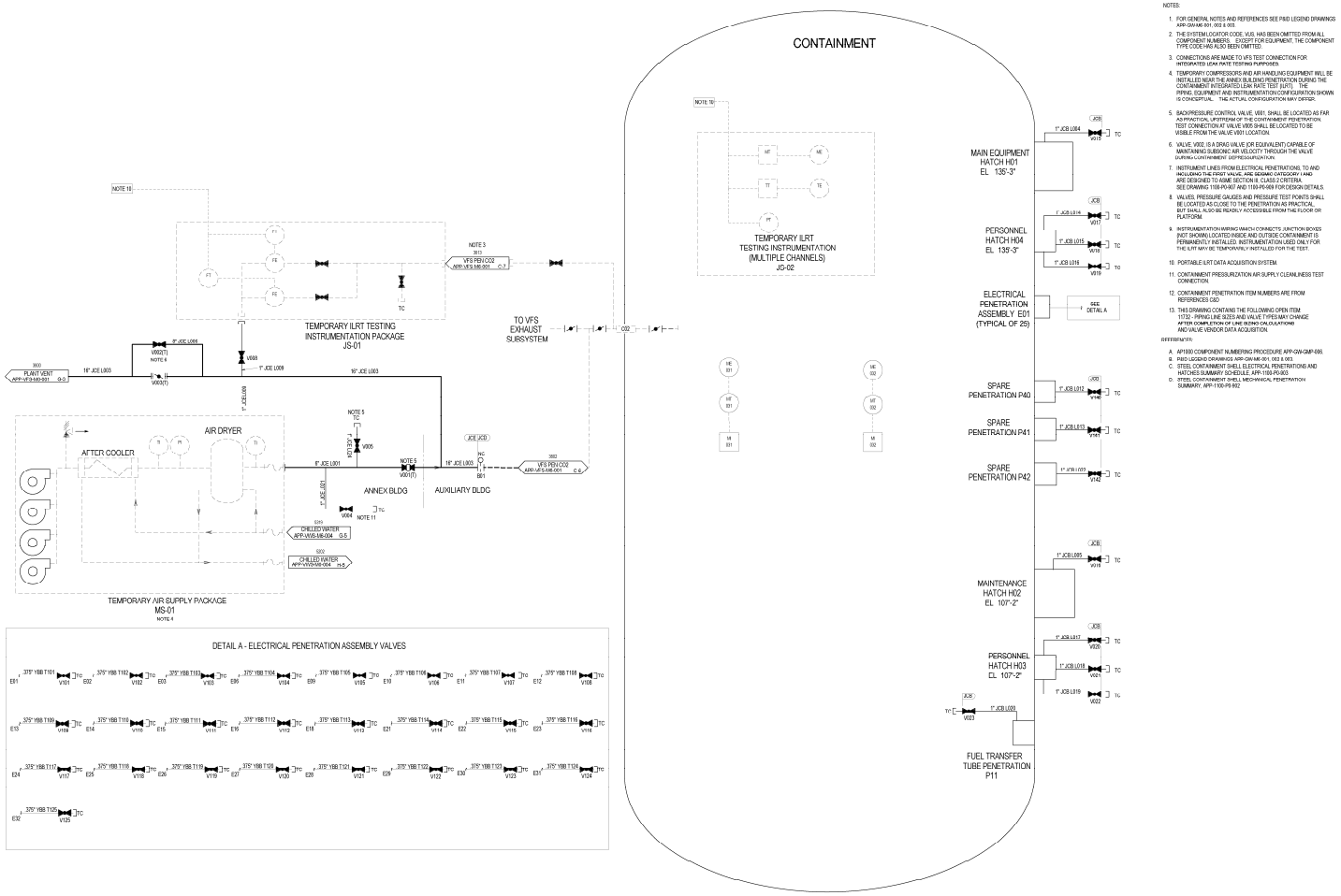

Figure 6.2.5-1
Containment Leak Rate Test System Piping and Instrumentation Diagram

Figure represents system functional arrangement. Details internal to the system may differ as a result of implementation factors such as vendor-specific component requirements.

6.3 Passive Core Cooling System

The primary function of the passive core cooling system is to provide emergency core cooling following postulated design basis events. To accomplish this primary function, the passive core cooling system is designed to perform the following functions:

- Emergency core decay heat removal

  Provide core decay heat removal during transients, accidents or whenever the normal heat removal paths are lost. This heat removal function is available at reactor coolant system conditions including shutdowns. During refueling operations, when the IRWST is drained into the refueling cavity, other passive means of core decay heat removal are utilized. Subsection 6.3.3.4.4 provides a description of how this is accomplished.

- Reactor coolant system emergency makeup and boration

  Provide reactor coolant system makeup and boration during transients or accidents when the normal reactor coolant system makeup supply from the chemical and volume control system is unavailable or is insufficient.

- Safety injection

  Provide safety injection to the reactor coolant system to provide adequate core cooling for the complete range of loss of coolant accidents, up to and including the double-ended rupture of the largest primary loop reactor coolant system piping.

- Containment pH control

  Provide for chemical addition to the containment during post-accident conditions to establish floodup chemistry conditions that support radionuclide retention with high radioactivity in containment and to prevent corrosion of containment equipment during long-term floodup conditions.

The passive core cooling system is designed to operate without the use of active equipment such as pumps and ac power sources. The passive core cooling system depends on reliable passive components and processes such as gravity injection and expansion of compressed gases. The passive core cooling system does require a one-time alignment of valves upon actuation of the specific components.

6.3.1 Design Basis

The passive core cooling system is designed to perform its safety-related functions based on the following considerations:

- It has component redundancy to provide confidence that its safety-related functions are performed, even in the unlikely event of the most limiting single failure occurring coincident with postulated design basis events.

- Components are designed and fabricated according to industry standard quality groups commensurate with its intended safety-related functions.

- It is tested and inspected at appropriate intervals, as defined by the ASME Code, Section XI, and by technical specifications.

- It performs its intended safety-related functions following events such as fire, internal missiles or pipe breaks.
- It is protected from the effects of external events such as earthquakes, tornadoes, and floods.
- It is designed to be sufficiently reliable, considering redundancy and diversity, to support the plant core melt frequency and significant release frequency goals.

6.3.1.1 Safety Design Basis

The passive core cooling system is designed to provide emergency core cooling during events involving increases and decreases in secondary side heat removal and decreases in reactor coolant system inventory. Subsection 6.3.3 provides a description of the design basis events. The performance criteria are provided in Subsection 6.3.1 and also described in Chapter 15, under the respective event sections.

6.3.1.1.1 Emergency Core Decay Heat Removal

For postulated non-LOCA events, where a loss of capability to remove core decay heat via the steam generators occurs, the passive core cooling system is designed to perform the following functions for at least 72 hours:

- The passive residual heat removal heat exchanger automatically actuates to provide reactor coolant system cooling.
- The passive residual heat removal heat exchanger, in conjunction with the in-containment refueling water storage tank, condensate collection features and the passive containment cooling system, are designed to remove decay heat following a design basis event. Automatic depressurization actuation is not expected, but may occur depending on the amount of reactor coolant system leakage and when normal systems are recovered (refer to Subsection 6.3.1.1.4).
- The passive residual heat removal heat exchanger is designed to maintain acceptable reactor coolant system conditions following a non-LOCA event. The applicable post-accident safety evaluation criteria are discussed in Chapter 15.
- The passive residual heat removal heat exchanger is capable of performing its post-accident safety functions, assuming the steam generated in the in-containment refueling water storage tank is condensed on the containment vessel and returned by gravity via the in-containment refueling water storage tank condensate return gutter and downspouts.
- During a steam generator tube rupture event, the passive residual heat removal heat exchanger removes core decay heat and reduces reactor coolant system temperature and pressure, equalizing with steam generator pressure and terminating break flow, without overfilling the steam generator.

System operation beyond 72 hours is described in Subsection 6.3.1.2.1.

6.3.1.1.2 Reactor Coolant System Emergency Makeup and Boration

For postulated non-LOCA events, sufficient core makeup water inventory is automatically provided to keep the core covered and to allow for decay heat removal. In addition, this makeup prevents actuation of the automatic depressurization system for a significant time.

For postulated events resulting in an inadvertent cooldown of the reactor coolant system, such as a steam line break, sufficient borated water is automatically provided to makeup for reactor coolant system shrinkage. The borated water also counteracts the reactivity increase caused by the resulting system cooldown.

For a Condition II steam line break described in Chapter 15, return to power is acceptable if there is no core damage. For this event, the automatic depressurization system is not actuated.

For a large steam line break, the peak return to power is limited so that the offsite dose limits are satisfied. Following either of these events, the reactor is automatically brought to a subcritical condition.

For safe shutdown, the passive core cooling system is designed to supply sufficient boron to the reactor coolant system to maintain the technical specification shutdown margin for cold, post-depressurization conditions, with the most reactive rod fully withdrawn from the core. The automatic depressurization system is not expected to actuate for these events.

6.3.1.1.3 Safety Injection

The passive core cooling system provides sufficient water to the reactor coolant system to mitigate the effects of a loss of coolant accident. In the event of a large loss of coolant accident, up to and including the rupture of a hot or cold leg pipe, where essentially all of the reactor coolant volume is initially displaced, the passive core cooling system rapidly refills the reactor vessel, refloods the core, and continuously removes the core decay heat. A large break is a rupture with a total cross-sectional area equal to or greater than one square foot. Although the criteria for mechanistic pipe break are used to limit the size of pipe rupture considered in the design and evaluation of piping systems, as described in Subsection 3.6.3, such criteria are not used in the design of the passive core cooling system.

Sufficient water is provided to the reactor vessel following a postulated loss of coolant accident so that the performance criteria for emergency core cooling systems, described in Chapter 15, are satisfied.

The automatic depressurization system valves, provided as part of the reactor coolant system, are designed so that together with the passive core cooling system they:

- Satisfy the small loss of coolant accident performance requirements
- Provide effective core cooling for loss of coolant accidents from when the passive core cooling system is actuated through the long-term cooling mode.

6.3.1.1.4 Safe Shutdown

The functional requirements for the passive core cooling system specify that the plant be brought to a safe, stable condition using the passive residual heat removal heat exchanger for events not involving a loss of coolant. As stated in Subsection 6.3.1.1.1, the passive residual heat removal heat exchanger in conjunction with the passive containment cooling system provides sufficient heat removal to satisfy the post-accident safety evaluation criteria for at least 72 hours. Additionally, the

passive core cooling system, in conjunction with the passive containment cooling system and the automatic depressurization system, has the capability to establish long-term safe shutdown conditions in the reactor coolant system, as identified in Subsection 7.4.1.1.

The core makeup tanks automatically provide injection to the reactor coolant system after they are actuated on low reactor coolant temperature or low pressurizer pressure or level. The passive core cooling system can maintain stable plant conditions for a long time in this mode of operation, depending on the reactor coolant leakage and the availability of ac power sources. For example, with a technical specification leak rate of 10 gpm, stable plant conditions can be maintained for at least 10 hours. With a smaller leak a longer time is available.

In scenarios when ac power sources are unavailable for approximately 22 hours, the automatic depressurization system automatically actuates. However, after the initial plant cooldown following a non-LOCA event, operators assess plant conditions and have the option to perform recovery actions to further cool and depressurize the reactor coolant system in a closed-loop mode of operation, i.e., without actuation of the automatic depressurization system. After verifying the reactor coolant system is in an acceptable, stable condition such that automatic depressurization is not needed, the operators may take action to extend the passive residual heat removal heat exchanger operation by de-energizing the loads on the Class 1E dc batteries powering the protection and monitoring system actuation cabinets. After operators have taken action to extend its operation, the passive residual heat removal heat exchanger, in conjunction with the passive containment cooling system, has the capability to maintain safe, stable conditions for at least 72 hours. The automatic depressurization system remains available to maintain safe shutdown conditions at a later time.

In most sequences the operators would return the plant to normal system operations and terminate passive system operation within several hours in accordance with the plant emergency operating procedures. For loss of coolant accidents, when the core makeup tank level reaches the automatic depressurization system actuation setpoint and other postulated events where the passive residual heat removal heat exchanger operation is not extended or is exhausted, the automatic depressurization system may be initiated. This results in injection from the accumulators and subsequently from the in-containment refueling water storage tank, once the reactor coolant system is nearly depressurized. For these conditions, the reactor coolant system depressurizes to saturated conditions at about 250°F within 24 hours. The passive core cooling system can maintain this safe shutdown condition indefinitely for the plant as identified in Subsection 7.4.1.1.

The passive core cooling system functional requirements are met over the range of anticipated events and single failure assumptions. The primary function of the passive core cooling system during a safe shutdown using only safety-related equipment is to provide a means for boration, injection, and core cooling. Details of the safe shutdown design bases are presented in Subsection 5.4.7 and Section 7.4. The performance of the passive residual heat removal heat exchanger to bring the plant to 420°F in 36 hours is summarized in Subsection 19E.4.10.2.

6.3.1.1.5 Containment pH Control

The passive core cooling system is capable of maintaining the desired post-accident pH conditions in the recirculation water after containment floodup. The pH adjustment is capable of maintaining containment pH within a range of 7.0 to 9.5, to enhance radionuclide retention in the containment and to prevent stress corrosion cracking of containment components during long-term containment floodup.

6.3.1.1.6 Reliability Requirements

The passive core cooling system satisfies a variety of reliability requirements, including redundancy (such as for components, power supplies, actuation signals, and instrumentation), equipment testing

to confirm operability, procurement of qualified components, and provisions for periodic maintenance. In addition, the system provides protection in a number of areas including:

- Single active and passive component failures
- Spurious failures
- Physical damage from fires, flooding, missiles, pipe whip, and accident loads
- Environmental conditions such as high-temperature steam and containment floodup

Subsection 6.3.1.3 includes specific non-safety related design requirements that help to confirm satisfactory system reliability.

6.3.1.2 Non-safety Design Basis

6.3.1.2.1 Post-Accident Core Decay Heat Removal

The passive residual heat removal heat exchanger is designed to cool the reactor coolant system to 420°F in 36 hours, with or without reactor coolant pumps operating. This allows the reactor coolant system to be depressurized and the stress in the reactor coolant system and connecting pipe to be reduced to low levels. This non-bounding, conservative evaluation is discussed in Subsection 19E.4.10.2.

The passive residual heat removal heat exchanger, in conjunction with the in-containment refueling water storage tank, the condensate return features and the passive containment cooling system, has the capability to maintain the reactor coolant system in the specified, long-term safe shutdown condition of 420°F for greater than 14 days in a closed-loop mode of operation. The automatic depressurization system can be manually actuated by the operators during the extended passive residual heat removal heat exchanger operation to initiate open-loop cooling. The operator actions necessary to achieve safe shutdown using the passive residual heat removal heat exchanger in a closed-loop mode of operation involve preventing unnecessary actuation of the automatic depressurization system as detailed in Subsection 7.4.1.

Eventually, if pressurizer heaters are not available, the pressurizer sub-cools due to ambient heat loss. When this happens, the steam void within the pressurizer is transferred to the RCS. It has been determined that this condition is safe, so long as PRHR performance is not affected.

If PRHR performance is affected by sub-cooling (or other plant conditions) and non-safety systems to control core cooling are not reestablished, then the final, long term safe shutdown conditions may be achieved and maintained using ADS as discussed in Subsection 7.4.1.1.

6.3.1.3 Power Generation Design Basis

The passive core cooling system is designed to be sufficiently reliable to support the probabilistic risk analysis goals for core damage frequency and severe release frequency. In assessing the reliability for probabilistic risk analysis purposes, more realistic analysis is used for both the passive core cooling system performance and for plant response.

In the event of a small loss of coolant accident, the passive core cooling system limits the increase in peak clad temperature and core uncovery with design basis assumptions. For pipe ruptures of less than eight-inch nominal diameter size, the passive core cooling system is designed to prevent core uncovery with best estimate assumptions.

The passive residual heat removal heat exchanger and the in-containment refueling water storage tank are designed to delay significant steam release to the containment for at least one hour.

The frequency of automatic depressurization system actuation is limited to a low probability to reduce safety risks and to minimize plant outages. Equipment is located so that it is not flooded or it is designed so that it is not damaged by the flooding. Major plant equipment is designed for multiple occurrences without damage.

The pH control equipment is designed to minimize the potential for and the impact of inadvertent actuation.

The passive core cooling system is capable of supporting the required testing and maintenance, including capabilities to isolate and drain equipment.

6.3.2 System Design

The passive core cooling system is a seismic Category I, safety-related system. It consists of two core makeup tanks, two accumulators, the in-containment refueling water storage tank, the passive residual heat removal heat exchanger, pH adjustment baskets, and associated piping, valves, instrumentation, and other related equipment. The automatic depressurization system valves and spargers, which are part of the reactor coolant system, also provide important passive core cooling functions.

The passive core cooling system is designed to provide adequate core cooling in the event of design basis events. The redundant onsite safety-related class 1E dc and UPS system provides power such that protection is provided for a loss of ac power sources, coincident with an event, assuming a single failure has occurred.

6.3.2.1 Schematic Piping and Instrumentation Diagrams

Figure 6.3-1 shows the piping and instrumentation drawings of the passive core cooling system. Simplified flow diagrams are shown in Figures 6.3-3 and 6.3-4. The accident analysis results of events analyzed in Chapter 15 provide a summary of the expected fluid conditions in the passive core cooling system for the various locations shown on the simplified flow diagrams, for the specific plant conditions identified -- safety injection and decay heat removal.

The passive core cooling system is designed to supply the core cooling flow rates to the reactor coolant system specified in Chapter 15 for the accident analyses. The accident analyses flow rates and heat removal rates are calculated by assuming a range of component parameters, including best estimate and conservatively high and low values.

The passive core cooling system design is based on the six major components, listed in Subsection 6.3.2.2, that function together in various combinations to support the four passive core cooling system functions:

- Emergency decay heat removal
- Emergency reactor makeup/boration
- Safety injection
- Containment pH control

6.3.2.1.1 Emergency Core Decay Heat Removal at High Pressure and Temperature Conditions

For events not involving a loss of coolant, the emergency core decay heat removal is provided by the passive core cooling system via the passive residual heat removal heat exchanger. The heat exchanger consists of a bank of C-tubes, connected to a tubesheet and channel head arrangement at the top (inlet) and bottom (outlet). The passive residual heat removal heat exchanger connects to the reactor coolant system through an inlet line from one reactor coolant system hot leg (through a tee from one of the fourth stage automatic depressurization lines) and an outlet line to the associated steam generator cold leg plenum (reactor coolant pump suction).

The inlet line is normally open and connects to the upper passive residual heat removal heat exchanger channel head. The inlet line is connected to the top of the hot leg and is routed continuously upward to the high point near the heat exchanger inlet. The normal water temperature in the inlet line will be hotter than the discharge line.

The outlet line contains normally closed air-operated valves that open on loss of air pressure or on control signal actuation. The alignment of the passive residual heat removal heat exchanger (with a normally open inlet motor-operated valve and normally closed outlet air-operated valves) maintains the heat exchanger full of reactor coolant at reactor coolant system pressure. The water temperature in the heat exchanger is about the same as the water in the in-containment refueling water storage tank, so that a thermal driving head is established and maintained during plant operation.

The heat exchanger is elevated above the reactor coolant system loops to induce natural circulation flow through the heat exchanger when the reactor coolant pumps are not available. The passive residual heat removal heat exchanger piping arrangement also allows actuation of the heat exchanger with reactor coolant pumps operating. When the reactor coolant pumps are operating, they provide forced flow in the same direction as natural circulation flow through the heat exchanger. If the pumps are operating and subsequently trip, then natural circulation continues to provide the driving head for heat exchanger flow.

The heat exchanger is located in the in-containment refueling water storage tank, which provides the heat sink for the heat exchanger.

Although gas accumulation is not expected, there is a vertical pipe stub on the top of the inlet piping high point that serves as a gas collection chamber. Level detectors indicate when gases have collected in this area. There are provisions to allow the operators to open manual valves to locally vent these gases to the in-containment refueling water storage tank.

The passive residual heat removal heat exchanger, in conjunction with the in-containment refueling water storage tank, condensate return features and passive containment cooling system, can provide core cooling for at least 72 hours. After the in-containment refueling water storage tank water reaches its saturation temperature (in several hours), the process of steaming to the containment initiates. Containment pressure will increase as steam is released from the in-containment refueling water storage tank. As containment temperature increases, condensation begins to form on the subcooled metal and concrete surfaces inside containment. Condensation on these heat sink surfaces transfers energy to the bulk metal and concrete until they come into equilibrium with the containment atmosphere. Condensation that is not returned to the in-containment refueling water storage tank drains to the containment sump.

Condensation occurs on the steel containment vessel, which is cooled by the passive containment cooling system. Most of the condensate formed on the containment vessel wall is collected in a safety-related gutter arrangement. A gutter is located near the operating deck elevation, and a downspout piping system is connected at the polar crane girder and internal stiffener, to collect steam

condensate inside the containment during passive containment cooling system operation and return it to the in-containment refueling water storage tank. The gutter normally drains to the containment sump, but when the passive residual heat removal heat exchanger actuates, safety-related isolation valves in the gutter drain line shut and the gutter overflow returns directly to the in-containment refueling water storage tank. Recovery of the condensate maintains the passive residual heat removal heat exchanger heat sink for greater than 14 days.

The passive residual heat removal heat exchanger is used to maintain an acceptable, stable reactor coolant system condition. It transfers decay heat and sensible heat from the reactor coolant system to the in-containment refueling water storage tank, the containment atmosphere, the containment vessel, and finally to the ultimate heat sink-the atmosphere outside of containment. This occurs after in-containment refueling water storage tank saturation is reached and steaming to containment initiates.

The duration the passive residual heat removal heat exchanger can continue to remove decay heat is affected by the efficiency of the return of condensate to the in-containment refueling water storage tank. The in-containment refueling water storage tank water level is affected by the amount of steam that leaves the tank and does not return. Resources are typically recovered within 72 hours, which would allow the operators to place active, defense-in-depth systems into service and to terminate passive system operation. If resources are not recovered within this time frame, closed-loop cooling using the passive residual heat removal heat exchanger can be extended as described in Subsection 7.4.1.1 to maintain a safe, stable condition after a design basis event.

6.3.2.1.2 Reactor Coolant System Emergency Makeup and Boration

The core makeup tanks provide reactor coolant system makeup and boration during events not involving loss of coolant when the normal makeup system is unavailable or insufficient. There are two core makeup tanks located inside the containment at an elevation slightly above the reactor coolant loops. During normal operation, the core makeup tanks are completely full of cold, borated water. The boration capability of these tanks provides adequate core shutdown margin following a steam line break.

The core makeup tanks are connected to the reactor coolant system through a discharge injection line and an inlet pressure balance line connected to a cold leg. The discharge line is blocked by two normally closed, parallel air-operated isolation valves that open on a loss of air pressure or electrical power, or on control signal actuation. The core makeup tank discharge isolation valves are diverse from the passive residual heat removal heat exchanger outlet isolation valves discussed above. They use different globe valve body styles and different air operator types.

The pressure balance line from the cold leg is normally open to maintain the core makeup tanks at reactor coolant system pressure, which prevents water hammer upon initiation of core makeup tank injection.

The cold leg pressure balance line is connected to the top of the cold leg and is routed continuously upward to the high point near the core makeup tank inlet. The normal water temperature in this line will be hotter than the discharge line.

The outlet line from the bottom of each core makeup tank provides an injection path to one of the two direct vessel injection lines, which are connected to the reactor vessel downcomer annulus. Upon receipt of a safeguards actuation signal, the two parallel valves in each discharge line open to align the associated core makeup tank to the reactor coolant system.

There are two operating processes for the core makeup tanks, steam-compensated injection and water recirculation. During steam-compensated injection, steam is supplied to the core makeup tanks

to displace the water that is injected into the reactor coolant system. This steam is provided to the core makeup tanks through the cold leg pressure balance line. The cold leg line only has steam flow if the cold legs are voided.

During water recirculation, hot water from the cold leg enters the core makeup tanks, and the cold water in the tank is discharged to the reactor coolant system. This results in reactor coolant system boration and a net increase in reactor coolant system mass.

The operating process for the core makeup tanks depends on conditions in the reactor coolant system, primarily voiding in the cold leg. When the cold leg is full of water, the cold leg pressure balance line remains full of water and the injection occurs via water recirculation. If reactor coolant system inventory decreases sufficiently to cause cold leg voiding, then steam flows through the cold leg balance lines to the core makeup tanks.

Following an event such as steam-line break, the reactor coolant system experiences a decrease in temperature and pressure due to an increase of energy removed by the secondary system as a consequence of the break. The cooldown results in a reduction of the core shutdown margin due to the negative moderator temperature coefficient. There is a potential return to power, assuming the most reactive rod cluster control assembly is stuck in its fully withdrawn position. The actuation of the core makeup tanks following this event provides injection of borated water via water recirculation to mitigate the reactivity transient and provide the required shutdown margin.

In case of a steam generator tube rupture, core makeup tank injection together with the steam generator overfill prevention logic terminates the reactor coolant system leak into the steam generator. This occurs without actuation of the automatic depressurization system and without operator action. In a steam generator tube rupture, the core makeup tanks operate in the water recirculation mode to provide borated water to compensate for reactor coolant system inventory losses and to borate the reactor coolant system. In case of a leak rate of 10 gallons per minute, the passive core cooling system can delay the automatic depressurization system actuation for at least 10 hours while providing makeup water to the reactor coolant system. After the actuation of the automatic depressurization system, the passive core cooling system provides sufficient borated water to compensate for reactor coolant system shrinkage and to provide the reactor coolant system boration.

6.3.2.1.3 Safety Injection During Loss of Coolant Accidents

The passive core cooling system uses four different sources of passive injection during loss of coolant accidents.

- Accumulators provide a very high flow for a limited duration of several minutes.
- The core makeup tanks provide a relatively high flow for a longer duration.
- The in-containment refueling water storage tank provides a lower flow, but for a much longer time.
- The containment is the final long-term source of water. It becomes available following the injection of the other three sources and floodup of containment.

The operation of the core makeup tanks is described in the Subsection 6.3.2.1.2. During a loss of coolant accident, they provide injection rates commensurate with the severity of the loss of coolant accident. For a larger loss of coolant accident, and after the automatic depressurization system has been actuated, the cold legs are expected to be voided. In this situation, the core makeup tanks

operate at their maximum injection rate with steam entering the core makeup tanks through the cold leg pressure balance lines.

Downstream of the parallel discharge isolation valves, the core makeup tank discharge line contains two check valves, in series, that normally remain open with or without flow in the line. These valves prevent reverse flow through this line, from the accumulator, that would bypass the reactor vessel in the event of a larger loss of coolant accident in the cold leg or the cold leg pressure balance line.

For smaller loss of coolant accidents the core makeup tanks initially operate in the water recirculation mode since the cold legs are water filled. During this water recirculation, the core makeup tanks remain full, but the cold, borated water is purged with hot, less borated cold leg water. The water recirculation provides reactor coolant system makeup and also effectively borates the reactor coolant system. As the accident progresses, when the cold legs void, the core makeup tanks switch to the steam displacement mode which provides higher flow rates.

The two accumulators contain borated water and a compressed nitrogen cover gas to provide rapid injection. They are located inside the reactor containment and the discharge from each tank is connected to one of the direct vessel injection lines. These lines connect to the reactor vessel downcomer. A deflector in the annulus directs the water flow downward to minimize core bypass flow. The water and gas volumes and the discharge line resistance provide several minutes of injection in a large loss of coolant accident.

The in-containment refueling water storage tank is located in the containment at an elevation slightly above the reactor coolant system loop piping. Reactor coolant system injection is possible only after the reactor coolant system has been depressurized by the automatic depressurization system or by a loss of coolant accident. Squib valves in the in-containment refueling water storage tank injection lines open automatically on a 4th stage automatic depressurization signal. Check valves, arranged in series with the squib valves, open when the reactor pressure decreases to below the in-containment refueling water storage tank injection head.

After the accumulators, core makeup tanks, and the in-containment refueling water storage tank inject, the containment is flooded up to a level sufficient to provide recirculation flow through the gravity injection lines back into the reactor coolant system.

The time that it takes until the initiation of containment recirculation flow varies greatly, depending on the specific event. With a break in a direct vessel injection line, the in-containment refueling water storage tank spills out through the break and floods the containment, along with reactor coolant system leakage, and recirculation can occur in several hours. In the event of automatic depressurization without a reactor coolant system break and with condensate return, the in-containment refueling water storage tank level decreases very slowly. Recirculation may not initiate for several days.

Containment recirculation initiates when the recirculation line valves are open and the containment floodup level is sufficiently high. When the in-containment refueling water storage tank level decreases to a low level, the containment recirculation squib valves automatically open to provide redundant flow paths from the containment to the reactor.

These recirculation flow paths can also provide a suction flow path from the containment to the normal residual heat removal pumps, when they are operating after containment flood up. In addition, the squib valves in the recirculation paths containing normally open motor-operated valves can be manually opened to intentionally drain the in-containment refueling water storage tank to the reactor cavity during severe accidents. This action is modeled in the AP1000 probabilistic risk assessment.

A range of break sizes and locations are analyzed to verify the adequacy of passive core cooling system injection. These events include a no-break case, a complete severance of one (eight-inch) direct vessel injection line case, and other smaller break cases. Successful reactor coolant system depressurization to in-containment refueling water storage tank injection is achieved, as shown in Chapter 15.

In larger loss of coolant accidents, including double ended ruptures in reactor coolant system piping, the passive core cooling system can provide a large flow rate, from the accumulators, to quickly refill the reactor vessel lower plenum and downcomer. The accumulators provide the required injection flow during the first part of the event including refilling the downcomer and lower plenum and partially reflooding the core. After the accumulators empty, the core makeup tanks complete the reflooding of the core. The subsequent in-containment refueling water storage tank injection and recirculation provide long-term cooling. Both injection lines are available since the injection lines are not the source of a large pipe break.

6.3.2.1.4 Containment pH Control

Control of the pH in the containment sump water post-accident is achieved through the use of pH adjustment baskets containing granulated trisodium phosphate (TSP). The baskets are located below the minimum post-accident floodup level, and chemical addition is initiated passively when the water reaches the baskets. The baskets are placed at least a foot above the floor to reduce the chance that water spills in containment will dissolve the TSP.

The TSP is designed to maintain the pH of the containment sump water in a range from 7.0 to 9.5. This chemistry reduces radiolytic formation of elemental iodine in the containment sump, consequently reducing the aqueous production of organic iodine, and ultimately reducing the airborne iodine in containment and offsite doses.

The chemical addition also helps to reduce the potential for stress corrosion cracking of stainless steel components in a post floodup condition, where chlorides can leach out of the containment concrete and potentially affect these components during a long-term floodup event.

6.3.2.1.5 Passive Core Cooling System Actuation

Table 6.3-1 lists the remotely actuated valves used by the various passive core cooling system components. The engineered safeguards features actuation signals used for these valves are described in Section 7.3. Table 6.3-1 shows the normal valve position, the valve position to actuate the associated component, and the failure position of the valve. The failed position represents the position that the valve fails upon loss of electrical power or other motive sources, such as instrument air.

Table 6.3-3 contains the failure mode and effects analysis of the passive core cooling system.

6.3.2.2 Equipment and Component Descriptions

Table 6.3-2 contains a summary of equipment parameters for major components of the passive core cooling system.

6.3.2.2.1 Core Makeup Tanks

The two core makeup tanks are vertical, cylindrical tanks with hemispherical upper and lower heads. They are made of carbon steel, clad on the internal surfaces with stainless steel. The core makeup tanks are AP1000 Equipment Class A and are designed to meet seismic Category I requirements. They are located inside containment on the 107-foot floor elevation. The core makeup tanks are

located above the direct vessel injection line connections to the reactor vessel, which are located at an elevation near the bottom of the hot leg.

During normal operation the core makeup tanks are completely filled with borated water and are maintained at reactor coolant system pressure by the cold leg pressure balance line. The temperature of the borated water in the core makeup tanks is about the same as the containment ambient temperature since the tanks are not insulated or heated.

The inlet line from the cold leg is sized for loss of coolant accidents, where the cold legs become voided and higher core makeup tank injection flows are required. The discharge line from each core makeup tank contains a flow-tuning orifice that provides a mechanism for the field adjustment of the injection line resistance. The orifice is used to establish the required flow rates assumed in the core makeup tank design. The core makeup tanks provide injection for an extended time after core makeup tank actuation. The duration of injection will be much longer when the core makeup tanks operate in the water recirculation mode as compared to the steam condensation mode.

Connections are provided for remotely adjusting the boron concentration of the borated water in each core makeup tank during normal plant operation, as required. Makeup water for the core makeup tank is provided by the chemical and volume control system. Samples from the core makeup tanks are taken periodically to check boron concentration.

Each core makeup tank has an inlet diffuser which is designed to reduce steam velocities entering the core makeup tank; thereby minimizing potential water hammer and reducing the amount of mixing that occurs during initial core makeup tank operation. The inlet diffuser flow area is $\geq$ 165 in^2.

The core makeup tanks are located inside the containment but outside the secondary shield wall. This facilitates maintenance and inspection.

Core makeup tank level and inlet and outlet line temperatures are monitored by indicators and alarms. The operator can take action as required to meet the technical specification requirements for core makeup tank operability.

6.3.2.2.2 Accumulators

The two accumulators are spherical tanks made of carbon steel and clad on the internal surfaces with stainless steel. The accumulators are AP1000 Equipment Class C and are designed to meet seismic Category I requirements. They are located inside the containment on the floor just below the core makeup tanks.

The accumulators are mostly filled with borated water and pressurized with nitrogen gas. The temperature of the borated water in the accumulators is about the same as the containment ambient temperature since the tanks are not insulated or heated. Each accumulator is connected to one of the direct vessel injection lines. During normal operation, the accumulator is isolated from the reactor coolant system by two check valves in series. When the reactor coolant system pressure falls below the accumulator pressure, the check valves open and borated water is forced into the reactor coolant system by the gas pressure. Mechanical operation of the check valves is the only action required to open the injection path from the accumulators to the core.

The accumulators are designed to deliver a high flow of borated water to the reactor vessel in the event of a large loss of coolant accident. This large flow rate is used to quickly establish core cooling following the large loss of reactor coolant system inventory.

The injection line from each accumulator contains a flow-tuning orifice that provides a mechanism for the field adjustment of the injection line resistance. The orifice is used to establish the required flow

rates assumed in the accumulator design. The accumulator provides injection for several minutes after reactor coolant system pressure drops below the static accumulator pressure.

Connections are provided for remotely adjusting the level and boron concentration of the borated water in each accumulator during normal plant operation, as required. Accumulator water level may be adjusted either by draining or by pumping borated water from the chemical and volume control system to the accumulator. Samples from the accumulators are taken periodically to check the boron concentration.

Accumulator pressure is provided by a supply of nitrogen gas and can be adjusted as required during normal plant operation. However, the accumulators are normally isolated from the nitrogen supply. Gas relief valves on the accumulators protect them from overpressurization. The system also includes the capability to remotely vent gas from the accumulator, if required.

The accumulators are located inside the containment and outside the secondary shield wall. This facilitates maintenance and inspection.

Accumulator level and pressure are monitored by indication and alarms. The operator can take action, as required, to meet the technical specification requirements for accumulator operability.

6.3.2.2.3 In-Containment Refueling Water Storage Tank

The in-containment refueling water storage tank is a large, stainless-steel lined tank located underneath the operating deck inside the containment. The in-containment refueling water storage tank is AP1000 Equipment Class C and is designed to meet seismic Category I requirements. The tank is constructed as an integral part of the containment internal structures, and is isolated from the steel containment vessel. See Subsection 3.8.3 for additional information.

The bottom of the in-containment refueling water storage tank is above the reactor coolant system loop elevation so that the borated refueling water can drain by gravity into the reactor coolant system after it is sufficiently depressurized. The in-containment refueling water storage tank is connected to the reactor coolant system through both direct vessel injection lines. The in-containment refueling water storage tank contains borated water, at the existing temperature and pressure in containment.

Vents are installed in the roof of the in-containment refueling water storage tank. These vents are normally closed in order to contain water vapor and radioactive gases within the tank during normal operation and to prevent debris from entering the tank from the containment operating deck. The vents open with a slight pressurization of the in-containment refueling water storage tank. These vents provide a path to vent steam released by the spargers or generated by the passive residual heat removal heat exchanger, into the containment atmosphere. Other vents also open on small pressure differentials to allow air/steam to enter the in-containment refueling water storage tank from containment, such as during a loss of coolant accident, to prevent damage to the tank. Overflows are provided from the in-containment refueling water storage tank to the refueling cavity to accommodate volume and mass increases during passive residual heat removal heat exchanger or automatic depressurization system operation, while minimizing the floodup of the containment.

The IRWST is stainless steel lined and does not contain material either in the tank or the recirculation path that could plug the outlet screens.

The in-containment refueling water storage tank contains one passive residual heat removal heat exchanger and two depressurization spargers. The top of the passive residual heat removal heat exchanger tubes are located underwater and extend down into the in-containment refueling water storage tank. The spargers are also submerged in the in-containment refueling water storage tank, with the spargers midarms located below the normal water level.

The in-containment refueling water storage tank is sized to provide the flooding of the refueling cavity for normal refueling, the post-loss of coolant accident flooding of the containment for reactor coolant system long-term cooling mode, and to support the passive residual heat removal heat exchanger operation. Flow out of the in-containment refueling water storage tank during the injection mode includes conservative allowances for spill flow during a direct vessel injection line break.

The in-containment refueling water storage tank can provide sufficient injection until the containment sump floods up high enough to initiate recirculation flow. The injection duration varies greatly, depending upon the specific event. A direct vessel injection line break more rapidly drains the in-containment refueling water storage tank and speeds containment floodup.

The containment floodup volume for a LOCA in PXS room B is less than 73,500 ft^3 (excluding the in-containment refueling water storage tank) below a containment elevation of 108 feet.

Connections to the in-containment refueling water storage tank provide for transfer to and from the reactor coolant system/refueling cavity via the normal residual heat removal system, purification and sampling via the spent fuel pit cooling system, and remotely adjusting boron concentration to the chemical and volume control system. Also, the normal residual heat removal system can provide cooling of the in-containment refueling water storage.

In-containment refueling water storage tank level and temperature are monitored by indicators and alarms. The operator can take action, as required, to meet the technical specification requirements for in-containment refueling water storage tank operability.

6.3.2.2.4 pH Adjustment Baskets

The passive core cooling system utilizes pH adjustment baskets for control of the pH level in the containment sump. The baskets are made of stainless steel with a mesh front that readily permits contact with water. The baskets are designated AP1000 Equipment Class C, and are designed to meet seismic Category I requirements.

The total weight of TSP contained in the baskets is at least 26,460 pounds. The TSP, in granular form, is provided to raise the pH of the borated water in the containment following an accident to at least 7.0. After extended plant operation, the granular TSP may cake into a solid form as it absorbs moisture. Assuming that the TSP has caked, the dissolution time of the TSP is approximately 3 hours. Good mixing with the sump water is expected due to both basket construction and because the baskets are placed in locations conducive to recirculation flows post-accident. The baskets are designed for ease of replacement of the TSP.

6.3.2.2.5 Passive Residual Heat Removal Heat Exchanger

The passive residual heat removal exchanger consists of inlet and outlet channel heads connected together by vertical C-shaped tubes. The tubes are supported inside the in-containment refueling water storage tank. The top of the tubes is several feet below the in-containment refueling water storage tank water surface. The component data for the passive residual heat removal heat exchanger is shown in Table 6.3-2. The passive residual heat removal heat exchanger is AP1000 Equipment Class A and is designed to meet seismic Category I requirements.

The heat exchanger inlet piping connects to an inlet channel head located near the outside top of the tank. The inlet channel head and tubesheet are attached to the tank wall via an extension flange. The heat exchanger is supported by a frame which is attached to the IRWST floor and ceiling. The heat exchanger supports are designed to ASME Code, Section III, subsection NF. The extended flange is designed to accommodate thermal expansion. Figure 6.3-5 illustrates the relationship between these parts and the boundaries of design code jurisdiction. The heat exchanger outlet piping is connected

to the outlet channel head, which is vertically below the inlet channel head, near the tank bottom. The outlet channel head has an identical structural configuration to the inlet channel head. Both channel head tubesheets are similar to the steam generator tubesheets and they have manways for inspection and maintenance access.

The passive residual heat removal heat exchanger is designed to remove sufficient heat so that its operation, in conjunction with available inventory in the steam generators, provides reactor coolant system cooling during loss of main feedwater or main feedline break events.

Passive residual heat removal heat exchanger flow and inlet and outlet line temperatures are monitored by indicators and alarms. The operator can take action, as required, to meet the technical specification requirements or follow emergency operating procedures for control of the passive residual heat removal heat exchanger operation.

6.3.2.2.6 Depressurization Spargers

Two reactor coolant depressurization spargers are provided. Each one is connected to an automatic depressurization system discharge header (shared by three automatic depressurization system stages) and submerged in the in-containment refueling water storage tank. Each sparger has four branch arms inclined downward. The connection of the sparger branch arms to the sparger hub are submerged below the in-containment refueling water storage tank overflow level by ≤11.5 feet. The component data for the spargers is shown in Table 6.3-2. The spargers are AP1000 Equipment Class C and are designed to meet seismic Category I requirements.

The spargers perform a nonsafety-related function -- minimizing plant cleanup and recovery actions following automatic depressurization. They are designed to distribute steam into the in-containment refueling water storage tank, thereby promoting more effective steam condensation.

The first three stages of automatic depressurization system valves discharge through the spargers and are designed to pass sufficient depressurization venting flow, with an acceptable pressure drop, to support the depressurization system performance requirements. The installation of the spargers prevents undesirable and/or excessive dynamic loads on the in-containment refueling water storage tank and other structures.

Each sparger is sized to discharge at a flow rate that supports automatic depressurization system performance, which in turn, allows adequate passive core cooling system injection.

6.3.2.2.7 IRWST and Containment Recirculation Screens

The passive core cooling system has two different sets of screens that are used to prevent debris from entering the reactor and blocking core cooling passages during a LOCA: IRWST screens and containment recirculation screens. The screens are AP1000 Equipment Class C and are designed to meet seismic Category I requirements. The structural frames attachment to the building structure, and attachment of the screen modules use the criteria of ASME Code, Section III Subsection NF. The screen modules are fabricated of sheet metal and are designed and fabricated to a manufacturer's standard. The IRWST screens and containment recirculation screens are designed to comply with applicable licensing regulations including:

- GDC 35 of 10 CFR 50 Appendix A
- Regulatory Guide 1.82
- NUREG-0897

The operation of the passive core cooling system following a LOCA is described in Subsection 6.3.2.1.3. Proper screen design, plant layout, and other factors prevent clogging of these screens by debris during accident operations.

6.3.2.2.7.1 General Screen Design Criteria

The IRWST screens and containment recirculation screens are designed to comply with the following criteria.

1. Screens are designed to Regulatory Guide 1.82, including:

    - Separate, large screens are provided for each function.
    - Screens are located well below containment floodup level. Each screen provides the function of a trash rack and a fine screen. A debris curb is provided to prevent high density debris from being swept along the floor to the screen face.
    - Floors slope away from screens (not required for AP1000).
    - Drains do not impinge on screens.
    - Screens can withstand accident loads and credible missiles.
    - Screens have conservative flow areas to account for plugging. Operation of the non-safety-related normal residual heat removal pumps with suction from the IRWST and the containment recirculation lines is considered in sizing screens.
    - System and screen performance are evaluated.
    - Screens have solid top cover. Containment recirculation screens have protective plates that are located no more than 1 foot above the top of the screens and extend at least 10 feet in front and 7 feet to the side of the screens. The plate dimensions are relative to the portion of the screens where water flow enters the screen openings. Coating debris, from coatings located outside of the ZOI, is not transported to the containment recirculation screens, to the IRWST screens, or into a direct vessel injection or a cold leg LOCA break that becomes submerged during recirculation considering the use of high density coatings discussed in Subsection 6.1.2.1.5.
    - Screens are seismically qualified.
    - Screen openings are sized to prevent blockage of core cooling.
    - Screens are designed for adequate pump performance. AP1000 has no safety-related pumps.
    - Corrosion resistant materials are used for screens.
    - Access openings in screens are provided for screen inspection.
    - Screens are inspected each refueling.

2. Low screen approach velocities limit the transport of heavy debris even with operation of normal residual heat removal pumps.

3. [*Metal reflective insulation is used on ASME class 1 lines because they are subject to loss-of-coolant accidents. Metal reflective insulation is also used on the reactor vessel, the reactor coolant pumps, the steam generators, and on the pressurizer because they have relatively large insulation surface areas and they are located close to large ASME class 1 lines. As a result, they are subject to jet impingement during loss-of-coolant accidents.*]* A suitable equivalent insulation to metal reflective may be used. A suitable equivalent insulation is one that is encapsulated in stainless steel that is seam welded so that LOCA jet impingement does not damage the insulation and generate debris. Another suitable insulation is one that may be damaged by LOCA jet impingement as long as the resulting insulation debris is not transported to the containment recirculation screens, to the IRWST screens, or into a direct vessel injection or a cold leg LOCA break that becomes submerged during recirculation. In order to qualify as a suitable equivalent insulation, testing must be performed that subjects the insulation to conditions that bound the AP1000 conditions and demonstrates that debris would not be generated. If debris is generated, testing and/or analysis must be performed to demonstrate that the debris is not transported to an AP1000 screen or into the core through a flooded break. It would also have to be shown that the material used would not generate chemical debris. In addition, the testing and/or analysis must be approved by the NRC.

   [*In order to provide additional margin, metal reflective insulation is used inside containment where it would be subject to jet impingement during loss-of-coolant accidents that are not otherwise shielded from the blowdown jet.*]* As a result, fibrous debris is not generated by loss-of-coolant accidents. Insulation located within the zone of influence (ZOI), which is a spherical region within a distance equal to 29 inside diameters (for Min-K, Koolphen-K, or rigid cellular glass insulation) or 20 inside diameters (for other types of insulation) of the LOCA pipe break is assumed to be affected by the LOCA when there are intervening components, supports, structures, or other objects.

   [*The ZOI in the absence of intervening components, supports, structures, or other objects includes insulation in a cylindrical area extending out a distance equal to 45 inside diameters from the break along an axis that is a continuation of the pipe axis and up to 5 inside diameters in the radial direction from the axis.*]* A suitable equivalent insulation to metal reflective may be used as discussed in the previous paragraph.

   [*Insulation used inside the containment, outside the ZOI, but below the maximum post-DBA LOCA floodup water level (plant elevation 110.2 feet), is metal reflective insulation, jacketed fiberglass, or a suitable equivalent.*]* A suitable equivalent insulation is one that would be restrained so that it would not be transported by the flow velocities present during recirculation and would not add to the chemical precipitates. In order to qualify as a suitable equivalent insulation, testing must be performed that subjects the insulation to conditions that bound the AP1000 conditions and demonstrates that debris would not be generated. If debris is generated, testing and/or analysis must be performed to demonstrate that the debris is not transported to an AP1000 screen or into the core through a flooded break. It would also have to be shown that the material used would not generate chemical debris. In addition, the testing and/or analysis must be approved by the NRC.

   [*Insulation used inside the containment, outside the ZOI, but above the maximum post-design basis accident (DBA) LOCA floodup water level, is jacketed fiberglass, rigid cellular glass, or a suitable equivalent.*]* A suitable equivalent insulation is one that when subjected to dripping of water from the containment dome would not add to the chemical precipitates; suitable equivalents include metal reflective insulation.

*NRC Staff approval is required prior to implementing a change in this information.

4. Coatings are not used on surfaces located close to the containment recirculation screens. The surfaces considered close to the screens are defined in Subsection 6.3.2.2.7.3. Refer to Subsection 6.1.2.1.6. These surfaces are constructed of materials that do not require coatings.

5. The IRWST is enclosed which limits debris egress to the IRWST screens.

6. Containment recirculation screens are located above lowest levels of containment.

7. Long settling times are provided before initiation of containment recirculation.

8. Air ingestion by safety-related pumps is not an issue in the AP1000 because there are no safety-related pumps. The normal residual heat removal system pumps are evaluated to show that they can operate with minimum water levels in the IRWST and in the containment.

9. A commitment for cleanliness program to limit debris in containment is provided in Subsection 6.3.8.1.

10. [*Other potential sources of fibrous material, such as ventilation filters or fiber-producing fire barriers, are not located in jet impingement damage zones or below the maximum post-DBA LOCA floodup water level.*]*

11. Other potential sources of transportable material, such as caulking, signs, and equipment tags installed inside the containment are located:

    - Below the maximum flood level, or

    - Above the maximum flood level and not inside a cabinet or enclosure.

    Tags and signs in these locations are made of stainless steel or another metal that has a density ≥ 100 lbm/ft^3. Caulking in these locations is a high density (≥ 100 lbm/ft^3).

    The use of high-density metal prevents the production of debris that could be transported to the containment recirculation screens, to the IRWST screens, or into a direct vessel injection or a cold leg LOCA break location that is submerged during recirculation. If a high-density material is not used for these components, then the components must be located inside a cabinet or other enclosure, or otherwise shown not to transport; the enclosures do not have to be watertight, but need to prevent water dripping on them from creating a flow path that would transport the debris outside the enclosure. For light-weight (< 100 lb$_m$/ft^3) caulking, signs or tags that are located outside enclosures, testing must be performed that subjects the caulking, signs, or tags to conditions that bound the AP1000 conditions and demonstrates that debris would not be transported to an AP1000 screen or into the core through a flooded break. Note that in determining if there is sufficient water flow to transport these materials, consideration needs to be given as to whether they are within the ZOI (for the material used) because that determines whether they are in their original geometry or have been reduced to smaller pieces. It would also have to be shown that the material used would not generate chemical debris. In addition, the testing must be approved by the NRC.

12. An evaluation consistent with Regulatory Guide 1.82, Revision 3, and subsequently approved NRC guidance, has been performed (Reference 3) to demonstrate that adequate long-term core cooling is available considering debris resulting from a LOCA together with debris that exists before a LOCA. As discussed in Subsection 6.3.2.2.7.1, a LOCA in the AP1000 does not generate fibrous debris due to damage to insulation or other materials included in the AP1000 design. The evaluation considered resident fibers and particles that could be present

*NRC Staff approval is required prior to implementing a change in this information.

considering the plant design, location, and containment cleanliness program. The determination of the characteristics of such resident debris was based on sample measurements from operating plants. The evaluation also considered the potential for the generation of chemical debris (precipitants). The potential to generate such debris was determined considering the materials used inside the AP1000 containment, the post-accident water chemistry of the AP1000, and the applicable research/testing.

The evaluation considered the following conservative considerations:

- [*The COL cleanliness program will limit the total amount of resident debris inside the containment to ≤ 130 pounds and the amount of the total that might be fiber to ≤ 6.6 pounds.*]*

- In addition to the resident debris, the LOCA blowdown jet may impinge on coatings and generate coating debris fines, which because of their small size, might not settle. The amount of coating debris fines that can be generated in the AP1000 by a LOCA jet will be limited to less than 70 pounds for double-ended cold leg and double-ended direct vessel injection LOCAs. In evaluating this limit, a ZOI of 4 IDs for epoxy and 10 IDs for inorganic zinc will be used. A DEHL LOCA could generate more coating debris; however, with the small amount of fiber available in the AP1000 following a LOCA, the additional coating debris fines that may be generated in a DEHL LOCA are not limiting.

- The total resident and ZOI coating debris available for transport following a LOCA is ≤ 193.4 pounds of particulate and ≤ 6.6 pounds of fiber. The percentage of this debris that could be transported to the screens or to the core is as follows:

  – Containment recirculation screens is ≤ 100 percent fiber and particles

  – IRWST screens is ≤ 50 percent fiber and 100 percent particles

  – Core (via a direct vessel injection or a cold leg LOCA break that becomes submerged) is ≤ 90 percent fiber and 100 percent particles

- Fibrous insulation debris is not generated and transported to the screens or into the core as discussed in item 3.

- Metal reflective insulation, including accident generated debris, is not transported to the screens or into the core.

- Coating debris is not transported to the screens or into the core as discussed in item 1.

- Debris from other sources, including caulking, signs, and tags, is not generated and transported to the screens or into the core as discussed in item 11.

- The total amount of chemical precipitates that could form in 30 days is ≤ 57 pounds.

- The percentage of the chemical precipitates that could be transported to the:

  – Containment recirculation screens is ≤ 100 percent.

  – IRWST screens is ≤ 100 percent.

  – Core is ≤ 100 percent.

*NRC Staff approval is required prior to implementing a change in this information.

- The range of flow rates during post-LOCA injection and recirculation is as follows:
  - CR screens: 2320 to 539 gpm
  - IRWST screens: 2320 to 464 gpm
  - Core: 2012 to 484 gpm

These flows bound operation of the PXS and the RNS. Note that if the RNS operates during post-LOCA injection or recirculation, the RNS flow is limited to 2320 gpm. This limit ensures that the operation of the plant is consistent with screen head loss testing. In addition, the screens will be designed structurally to withstand much higher flow rates and pressure losses to provide appropriate margin during PXS and RNS operation.

No chemical precipitates are expected to enter the IRWST because the primary water input to the IRWST is steam condensed on the containment vessel. However, during a direct vessel injection LOCA, recirculation can transport chemical debris through the containment recirculation screens and to the IRWST screens. As a result, 100 percent of the chemical debris is conservatively assumed to be transported to the IRWST screens.

The AP1000 containment recirculation screens and IRWST screens have been shown to have acceptable head losses. The head losses for these screens were determined in testing performed using the above conservative considerations. It has been shown that a head loss of 0.25 psi at the maximum screen flows is acceptable based on long-term core cooling sensitivity analysis.

Considering downstream effects as well as potential bypass through a cold leg LOCA, the core was shown to have acceptable head losses. The head losses for the core were determined in testing performed using the above conservative considerations. It has been shown that a head loss of 4.1 psi at these flows is acceptable based on long-term core cooling sensitivity analysis.

6.3.2.2.7.2 IRWST Screens

The IRWST screens are located inside the IRWST at the bottom of the tank. Figure 6.3-6 shows a plan view and Figure 6.3-7 shows a section view of these screens. Three separate screens are provided in the IRWST, one at either end of the tank and one in the center. A cross-connect pipe connects all three IRWST screens to distribute flow. The IRWST is closed off from the containment; its vents and overflows are normally closed by louvers. The potential for introducing debris inadvertently during plant operations is limited. A cleanliness program (refer to Subsection 6.3.8.1) controls foreign debris from being introduced into the tank during maintenance and inspection operations. The Technical Specifications require visual inspections of the screens during every refueling outage.

The IRWST design eliminates sources of debris from inside the tank. Insulation is not used in the tank. Air filters are not used in the IRWST vents or overflows. Wetted surfaces in the IRWST are corrosion resistant such as stainless steel or nickel alloys; the use of these materials prevents the formation of significant amounts of corrosion products. In addition, the water is required to be clean because it is used to fill the refueling cavity for refueling; filtering and demineralizing by the spent fuel pit cooling system is provided during and after refueling.

During a LOCA, steam vented from the reactor coolant system condenses on the containment shell and drains down the shell to the polar crane girder or internal stiffener where it is drained via downspouts to the IRWST. Steam that condenses below the internal stiffener drains down the shell and is collected in a gutter near the operating deck elevation. It is very unlikely that debris generated

by a LOCA can reach the downspouts or the gutter because of their locations. Each downspout inlet is covered with a coarse screen that prevents larger debris from entering the downspout. The gutter is covered with a trash rack which prevents larger debris from clogging the gutter or entering the IRWST through the two 4-inch drain pipes. The inorganic zinc coating applied to the inside surface of the containment shell is safety – Service Level I, and will stay in place and will not detach.

The design of the IRWST screens reduces the chance of debris reaching the screens. The screens are oriented vertically such that debris that settles out of the water does not fall on the screens. The lowest screening surface of the IRWST screens is located 6 inches above the IRWST floor to prevent high density debris from being swept along the floor by water flow to the IRWST screens. The screen design provides the trash rack function. This is accomplished by the screens having a large surface area to prevent a single object from blocking a large portion of the screen and by the screens having a robust design to preclude an object from damaging the screen and causing by-pass. The screen prevents debris larger than 0.0625 inch from being injected into the reactor coolant system and blocking fuel cooling passages. The screen is a type that has sufficient surface area to accommodate debris that could be trapped on the screen. The design of the IRWST screens is described further in APP-GW-GLN-147 (Reference 4).

The screen flow area is conservatively designed considering the operation of the nonsafety-related normal residual heat removal system pumps which produce a higher flow than the safety-related gravity driven IRWST injection/recirculation flows. As a result, when the normal residual heat removal system pumps are not operating, there is a large margin to screen clogging.

6.3.2.2.7.3 Containment Recirculation Screens

The containment recirculation screens are oriented vertically along walls above the loop compartment floor (elevation 83 feet). Figure 6.3-8 shows a plan view and Figure 6.3-9 shows a section view of these screens. Two separate screens are provided as shown in Figure 6.3-3. The loop compartment floor elevation is significantly above (11.5 feet) the lowest level in the containment, the reactor vessel cavity. A two-foot-high debris curb is provided in front of the screens.

During a LOCA, the reactor coolant system blowdown will tend to carry debris created by the accident (pipe whip/jets) into the cavity under the reactor vessel which is located away from and below the containment recirculation screens. As the accumulators, core makeup tanks and IRWST inject, the containment water level will slowly rise above the 108 foot elevation. The containment recirculation line opens when the water level in the IRWST drops to a low level setpoint a few feet above the final containment floodup level. When the recirculation lines initially open, the water level in the IRWST is higher than the containment water level and water flows from the IRWST backwards through the containment recirculation screen. This back flow tends to flush debris located close to the recirculation screens away from the screens. A flow connection between Screen A and Screen B is provided so that both recirculation screens will operate. This connection increases the reliability of the PXS in a PRA sequence where there are multiple failures of valves in one of the PXS subsystems.

The water level in the containment when recirculation begins is well above (~ 10 feet) the top of the recirculation screens. During the long containment floodup time, floating debris does not move toward the screens and heavy materials settle to the floors of the loop compartments or the reactor vessel cavity. During recirculation operation, the containment water level will not change significantly nor will it drop below the top of the screens.

The amount of debris that may exist following an accident is limited. Reflective insulation is used to preclude fibrous debris that can be generated by a loss of coolant accident and be postulated to reach the screens during recirculation. The nonsafety-related coatings used in the containment are designed to withstand the post accident environment. The containment recirculation screens are

protected by plates located above them. These plates prevent debris from the failure of nonsafety-related coatings from getting into the water close to the screens such that the recirculation flow can cause the debris to be swept to the screens before it settles to the floor. Stainless steel is used on the underside of these plates and on surfaces located below the plates, above the bottom of the screens, 10 feet in front and 7 feet to the side of the screens to prevent coating debris from reaching the screens.

A cleanliness program (refer to Subsection 6.3.8.1) controls foreign debris introduced into the containment during maintenance and inspection operations. The Technical Specifications require visual inspections of the screens during every refueling outage.

The design of the containment recirculation screens reduces the chance of debris reaching the screens. The screens are orientated vertically such that debris settling out of the water will not fall on the screens. The protective plates described above provide additional protection to the screens from debris. A 2-foot-high debris curb is provided to prevent high density debris from being swept along the floor by water flow to the containment recirculation screens. The screen design provides the trash rack function. This is accomplished by the screens having a large surface area to prevent a single object from blocking a large portion of the screen and by the screens having a robust design to preclude an object from damaging the screen and causing by-pass. The screen prevents debris larger than 0.0625 inch from being injected into the reactor coolant system and blocking fuel cooling passages. The screen is a type that has more surface area to accommodate debris that could be trapped on the screen. The design of the containment recirculation screens is further described in APP-GW-GLN-147 (Reference 4).

The screen flow area is conservatively designed, considering the operation of the normal residual heat removal system pumps, which produce a higher flow than the gravity driven IRWST injection/ recirculation flows. As a result, when the normal residual heat removal system pumps are not operating there is even more margin in screen clogging.

6.3.2.2.8 Valves

Design features used to minimize leakage for valves in the passive core cooling system include:

- Packless valves are used for manual isolation valves that are 2 inches or smaller.
- Valves which are normally open, except check valves and those which perform control function, are provided with back seats to limit stem leakage.

6.3.2.2.8.1 Manual Globe, Gate, and Check Valves

Gate valves have backseats and external screw and yoke assemblies.

Globe valves, both “T” and “Y” styles, are full-ported with external screw and yoke construction.

Stainless steel check valves have no penetration welds other than the inlet, outlet, and bonnet. The check valve hinge is serviced through the bonnet.

The gasket of the stainless steel manual globe and gate valves is similar to those described in Subsection 6.3.2.2.8.3 for motor-operated valves.

6.3.2.2.8.2 Manual Valves

Manual valves are generally used as maintenance isolation valves. When used for this function they are under administrative control. They are located so that no single valve can isolate redundant

passive core cooling system equipment or they are provided with alarms in the main control room to indicate mispositioning.

To help preclude the possibility of passive core cooling system degradation due to valve mispositioning, line connections such as vent and drain lines, test connections, pressure points, flow element test points, flush connections, local sample points, and bypass lines are provided with double isolation or sealed barriers. The isolation is provided by one of the following methods:

- Two valves in series
- A single valve with a screwed cap or blind flange
- A single locked-closed valve
- A blind flange

6.3.2.2.8.3 Motor-Operated Valves

The motor operators for gate valves are conservatively sized, considering the frictional component of the hydraulic unbalance on the valve disc, the disc face friction, and the packing box friction. For motor-operated valves, the valve disc is guided throughout the full disc travel to prevent chattering and to provide ease of gate movement. The seating surfaces are hard-faced to prevent galling and to reduce wear.

Where a gasket is employed for the body to bonnet joint, it is either a fully trapped, controlled compression, spiral wound asbestos (or a qualified asbestos substitute) gasket with provisions for seal welding or it is of the pressure seal design with provisions for seal welding.

The motor operator incorporates a hammer-blow feature that allows the motor to impact the disc away from the back seat upon closing. This hammer-blow feature impacts the discs and allows the motor to attain its operational speed prior to impact.

6.3.2.2.8.4 Motor-Operated Valve Controls

Remotely operated valves which do not receive a safeguards actuation signal, have their positions indicated on the main control board. When one of these valves is not in the ready position for injection during plant operation, this condition is indicated and alarmed in the main control room.

Spurious movement of a motor-operated valve due to an electrical fault in the motor actuation circuitry, coincident with loss of coolant accident, has been analyzed (Reference 1) and found to be an acceptably low probability event. In addition, power lockout in accordance with Branch Technical Position ICSB-18 is provided for those valves whose spurious movement could result in degraded passive core cooling system performance.

Table 6.3-1 provides a list of the remotely operated isolation valves in the passive core cooling system. These valves have various interlocks, automatic features, and position indication. Some valves have their control power locked out during normal plant operation. Periodic visual inspection and operability testing of the motor-operated valves in the passive core cooling system confirm valve operability. In addition, the location of the motor-operated valves within the containment, which are identified in Table 6.3-1, has been examined to identify remotely operated valves which may be submerged following a postulated loss of coolant accident.

See Section 3.4 for additional information on containment flooding effects.

6.3.2.2.8.5 Automatic Depressurization Valves

The automatic depressurization system consists of four different stages of valves. The first three stages each have two lines and each line has two valves in series; both normally closed. The fourth stage has four lines with each line having two valves in series; one normally open and one normally closed. The four stages, therefore, include a total of 20 valves. The four valve stages open sequentially.

The first stage, second-stage and third-stage valves have dc motor operators. The stage 1/2/3 control valves are normally closed globe valves; the isolation valves are normally closed gate valves. The fourth-stage valves are interlocked so that they can not open until reactor coolant system pressure has been substantially reduced. The fourth stage control valves are squib valves. There is a normally open motor-operated gate valve in series with each squib valve.

The first three stages have a common inlet header connected to the top of the pressurizer. The outlet of the first to third stages then combine to a common discharge line to one of the spargers in the in-containment refueling water storage tank. There is a second identical group of first- to third-stage valves with its own inlet and outlet line and sparger.

The fourth-stage valves connect directly to the top of the reactor coolant hot leg and vent directly to the steam generator compartment. There are also two groups of fourth stage valves, with one group in each steam generator compartment.

The automatic depressurization valves are designed to automatically open when actuated and to remain open for the duration of an automatic depressurization event. Valve stages 1 and 4 actuate at discrete core makeup tank levels, as either tank's level decreases during injection or from spilling out a broken injection line. Valve stages 2 and 3 actuate based upon a timed delay after actuation of the preceding stage. This opening sequence provides a controlled depressurization of the reactor coolant system. The valve opening sequence prevents simultaneous opening of more than one stage, to allow the valves to sequentially open. The valve actuation logic is based on two-of-four level detectors, in either core makeup tank for automatic depressurization system stages 1 and 4.

The stage 1/2/3 automatic depressurization control valves are designed to open relatively slowly. During the actuation of each stage, the isolation valve is sequenced open before the control valve. Therefore, there is some time delay between stage actuation and control valve actuation.

The operators can manually open the first-stage valves to a partially open position to perform a controlled depressurization of the reactor coolant system. Additional information on the automatic depressurization valves is provided in Subsection 5.4.6.

6.3.2.2.8.6 Low Differential Pressure Opening Check Valves

Several applications in the passive core cooling system gravity injection piping use check valves that open with low differential pressures. These check valves are installed in the following locations:

- The gravity injection line flow paths from the in-containment refueling water storage tank
- The containment recirculation lines that connect to the gravity injection lines

The check valves selected for these applications incorporate a simple swing-check design with a stainless steel body and hardened valve seats. The passive core cooling system check valves are safety-related, designed with their operating parts contained within the body, and with a low pressure drop across each valve. The valve internals are exposed to low temperature reactor coolant or borated refueling water.

During normal plant operation, these check valves are closed, with essentially no differential pressure across them. Confidence in the check valve operability is provided by operation at no differential pressure clean/cold fluid environment, the simple valve design, and the specified seat materials.

The check valves normally remain closed, except for testing or when called upon to open following an event to initiate passive core cooling system operation. The valves are not subject to the degradation from flow operation or impact loads caused by sudden flow reversal and seating, and they do not experience significant wear of the moving parts.

These check valves are periodically tested during shutdown conditions to demonstrate valve operation. These check valves are equipped with nonintrusive position sensors to indicate when the valves are open or closed.

In current plants, there are many applications of simple swing-check valves that have similar operating conditions to those in the passive core cooling system. The extensive operational history and experience derived from similar check valves used in the safety injection systems of current pressurized water reactors indicate that the design is reliable. Check valve failure to open and common mode failures have not been significant problems.

6.3.2.2.8.7 Accumulator Check Valves

The accumulator check valve design is similar to the accumulator check valves in current pressurized water reactor applications. It is also similar to the low differential pressure opening check valve design described in Subsection 6.3.2.2.8.6. The accumulator check valves are diverse from the core makeup tank valves because they use different check valve types.

During normal operation, the check valves are in the closed position with a nominal differential pressure across the disc of about 1550 psid. The valves remain in this position, except for testing or when called upon to open following an event. They are not subject to the degradation from flow operation or impact loads caused by sudden flow reversal and seating. They do not experience significant wear of the moving parts and they are expected to function with minimal backleakage.

The accumulators can accept some inleakage from the reactor coolant system without affecting availability. Continuous inleakage requires that the accumulator water volume and boron concentration be adjusted periodically to meet technical specification requirements.

The AP1000 accumulator check valves are periodically tested during shutdown conditions to demonstrate their operation.

6.3.2.2.8.8 Relief Valves

Relief valves are installed for passive core cooling system accumulators to protect the tanks from overpressure.

The passive core cooling system piping is reviewed to identify those lengths of piping that are isolated by normally closed valves and that do not have pressure relief protection in the piping section between the valves.

These piping sections include:

- Portions of in-containment passive core cooling system test lines that are not passive core cooling system accident mitigation flow paths and are not needed to achieve safe shutdown

- Piping vents, drains, and test connections that typically have two closed valves or one closed valve and a blind flange
- Check valve test lines with sections isolated by two normally closed valves.

The piping vents, drains, test connections, and check valve lines have design pressure/ temperature conditions compatible with the process piping to which they connect. Valve leakage does not overpressurize the isolated piping sections and pressure relief provisions are not required.

6.3.2.2.8.9 Explosively Opening (Squib) Valves

Squib valves are used in several passive core cooling system lines in order to provide the following:

- Zero leakage during normal operation
- Reliable opening during an accident
- Reduced maintenance and associated personnel radiation exposure

Squib valves are used to isolate the incontainment refueling water storage tank injection lines and the containment recirculation lines. In these applications, the squib valves are not expected to be opened during normal operation and anticipated transients. In addition, after they are opened it is not necessary that they re-close.

In the incontainment refueling water storage tank injection lines, the squib valves are in series with normally closed check valves. In the containment recirculation lines, the squib valves are in series with normally closed check valves in two lines and with normally open motor operated valves in the other two lines. As a result, inadvertent opening of these squib valves will not result in loss of reactor coolant or in draining of the incontainment refueling water storage tank.

The type of squib valve used in these applications provides zero leakage in both directions. It also allows flow in both directions. A valve open position sensor is provided for these valves. The IRWST injection squib valves and the containment recirculation squib valves in series with check valves are diverse from the other containment recirculation squib valves. They are designed to different design pressures. The IRWST injection and the containment recirculation squib valves are qualified to operate after being submerged; this capability adds margin to the performance of the PXS in handling debris during long-term core cooling following a LOCA.

Squib valves are also used to isolate the fourth stage automatic depressurization system lines. These squib valves are in series with normally open motor operated gate valves. Actuation of these squib valves requires signals from two separate protection logic cabinets. This helps to prevent spurious opening of these squib valves. The type of squib valve used in this application provides zero leakage of reactor coolant out of the reactor coolant system. The reactor coolant pressure acts to open the valve. A valve open position sensor is provided for these valves.

6.3.2.3 Applicable Codes and Classifications

Sections 5.2 and 3.2 list the equipment ASME Code and seismic classification for the passive core cooling system. Most of the piping and components of the passive core cooling system within containment are AP1000 Equipment Class A, B, or C and are designed to meet seismic Category I requirements. Equipment Class C components and piping, that provide an emergency core cooling function, have augmented weld inspection requirements (see Subsection 3.2.2.5). Some system piping and components that do not perform safety-related functions are nonsafety-related.

The requirements for the control, actuation, and Class 1E devices are presented in Chapters 7 and 8.

6.3.2.4 Material Specifications and Compatibility

Materials used for engineered safety feature components are given in Section 6.1. Materials for passive core cooling system components are selected to the meet the applicable material requirements of the codes in Section 5.2, as well as the following additional requirements:

- Parts of components in contact with borated water are fabricated of, or clad with, austenitic stainless steel or an equivalent corrosion-resistant material.
- Internal parts of components in contact with containment emergency sump solution during recirculation are fabricated of austenitic stainless steel or an equivalent corrosion resistant material.
- Valve seating surfaces are hard-faced to prevent failure and to reduce wear.
- Valve stem materials are selected for their corrosion resistance, high-tensile properties, and their resistance to surface scoring by the packing.

Section 6.1 summarizes the materials used for passive core cooling system components.

6.3.2.5 System Reliability

The reliability of the passive core cooling system is considered including periodic testing of the components during plant operation. The passive core cooling system is a redundant, safety-related system. The system is designed to withstand credible single active or passive failures.

The initiating signals for the passive core cooling system are derived from independent sources as measured from process parameters (pressurizer low pressure) or environmental (containment high pressure) variables. Redundant, as well as functionally independent variables, are measured to initiate passive core cooling system operation.

Redundant passive core cooling system components are physically separated and protected so that a single event cannot initiate a common failure.

Power sources for the passive core cooling system are divided into four independent divisions that are supplied from the Class 1E dc and UPS system. Sufficient battery capacity is maintained to provide required power to the emergency loads when onsite and offsite ac power sources are not available. Section 8.3 provides additional information.

The preoperational testing program confirms that the systems, as designed and constructed meet the functional design requirements. Section 14.2 provides additional information. The passive core cooling system is designed with the capability for on-line testing of its active components so the availability and operation status can be readily determined. Testing of passive components such as check valves, tanks, heat exchanger, and flow paths can be conducted during shutdown conditions. In addition, the integrity of the passive core cooling system is verified through examination of critical components during the routine in-service inspection. Subsection 3.9.6 provides additional information.

The reliability assurance program described in Section 16.2, extends to the procurement of passive core cooling system components. The procurement quality assurance program is described in Chapter 17.

The passive core cooling system is a redundant, safety-related system. During the long-term cooling period following a loss of coolant accident, once the passive core cooling system equipment has actuated, there is no long-term maintenance required. Components actuate to the safeguards actuation alignment and do not need subsequent position changes for long-term operation.

For long-term cooling, the reactor coolant system is depressurized to containment ambient pressure following a loss of coolant accident. During this period, the heat generated in the reactor core is the residual decay heat and the passive core cooling system provides the required decay heat removal.

Proper initial filling and venting of the passive core cooling system prevents water hammer from occurring in the passive core cooling system lines. In addition, the head of water provided by the various tanks keeps system lines full. The arrangement of the core makeup tank pressure equalization line design also reduces the potential for water hammer. High-point vents in the passive core cooling system lines are provided as a means for venting of lines. Fill and venting procedures for the passive core cooling system provide for the removal of air from the system.

The existence of high-point vents and the positive head of water provide means by which the operator can confirm water-solid passive core cooling system lines, where required.

6.3.2.5.1 Response to Active Failure

Treatment of active failures is described in Subsection 15.0.12.

An active failure is the failure of a powered component, a component of the electrical supply system, or instrumentation and control equipment to act on command to perform its function. One example is the failure of a motor-operated valve to move to its intended safeguards actuation position.

One change in the definition of active failures has been incorporated into the passive core cooling system design. The system has been specifically designed to treat check valve failures to reposition as active failures. More specifically, it is assumed that normally closed check valves may fail to open and normally open check valves may fail to close. Check valves that remain in the same position before and after an event are not considered active failures.

There are two exceptions to this treatment of check valve failures in the passive core cooling system. One exception is made for the accumulator check valves, which is consistent with the treatment of these specific check valves in currently licensed plant designs. The other exception is made for the core makeup tank check valves failure to re-open after they have closed during an accident. The valves are normally open, biased-opened check valves. This exception is based on the low probability of these check valves not re-opening within a few minutes after they have cycled closed during accumulator operation.

The failure mode and effects analysis provided in Table 6.3-3 provides a summary of the passive core cooling system response to single failure of the various components.

The following passive core cooling system motor-operated valves are not included in this analysis:

- Both accumulator discharge line motor-operated valves
- Both in-containment refueling water storage tank gravity injection line motor-operated valves
- Both containment recirculation line motor-operated valves
- Both core makeup tank inlet line motor-operated valves

- The passive residual heat removal heat exchanger inlet line motor-operated valve

These valves are normally in the required position for actuation of the associated component, they have redundant position indications and alarms, and they also receive confirmatory open actuation signals. The accumulator, incontainment refueling water storage tanks and passive residual heat removal heat exchanger valves have their power removed and locked out. The core makeup tank and the containment recirculation line have redundant series controllers. Therefore, these valves are not considered in the failure modes and effects analysis.

The analysis illustrates that the passive core cooling system can sustain an active failure in either the short-term or long-term and meet the required level of performance for core cooling. The short-term operation of the active components of the passive core cooling system following a steam line rupture or a steam generator tube rupture is similar to that following a loss of coolant accident. The same analysis is applicable and the passive core cooling system can sustain the failure of a single active component and meet the level of performance for the addition of shutdown reactivity.

Portions of the passive core cooling system are also relied upon to provide boration and makeup during a safety-related shutdown. The passive core cooling system can sustain an active failure and perform the required functions necessary to establish safe shutdown conditions. Safe shutdown operation of the passive core cooling system is described in Section 7.4.

6.3.2.5.2 Response to Passive Failure

Treatment of passive failures is described in Subsection 15.0.12.

A passive failure is the structural failure of a static component which limits the component's effectiveness in carrying out its design function. Examples include cracking of pipes, sprung flanges, or valve packing leaks. The passive core cooling system can sustain a single passive failure during the long-term phase and still retain an intact flow path to the core to supply sufficient flow to keep the core covered and to remove decay heat.

Since the passive core cooling system equipment is inside the containment, offsite dose caused by passive failures is not a concern. Also, with actuation of the automatic depressurization system, the reactor coolant system pressure is very close to containment pressure. Therefore, it is not necessary to isolate or realign the passive core cooling system following a passive failure.

The passive core cooling system flow paths are separated into redundant lines, either of which can provide minimum core cooling functions and return spilled water from the floor of the containment back to the reactor coolant system. For the long-term passive core cooling system function, adequate core cooling capacity exists with one of the two redundant flow paths.

6.3.2.5.3 Lag Times

Lag times for initiation and operation of the passive core cooling system are controlled by repositioning of valves. Some valves are normally in the position required for safety-related system function and therefore, their valve operation times are not considered. For those valves that reposition to initiate safety-related system functions, the valve repositioning times are less than the times assumed in the accident analyses. These lag times refer to the time after initiation of the safeguards actuation signal.

It is acceptable for the core makeup tank injection to be delayed several minutes following actuation due to high initial steam condensation rates in the tank.

6.3.2.5.4 Potential Boron Precipitation

Boron precipitation in the reactor vessel is prevented by sufficient flow of passive core cooling system water through the core to limit the increase in boron concentration of the water remaining in the reactor vessel. Water along with steam leaves the core and exits the RCS through the fourth stage ADS lines. These valves connect to the hot leg and open in about 20 minutes after a loss of coolant accident or an automatic depressurization system actuation.

6.3.2.5.5 Safe Shutdown

During a safe shutdown, the passive core cooling system provides redundancy for boration, makeup, and heat removal functions. Section 7.4 provides additional information about safe shutdown.

6.3.2.6 Protection Provisions

The measures taken to protect the system from damage that might result from various events are described in other sections, as listed below.

- Protection from dynamic effects is presented in Section 3.6.
- Protection from missiles is presented in Section 3.5.
- Protection from seismic damage is presented in Sections 3.7, 3.8, 3.9, and 3.10.
- Protection from fire is presented Subsection 9.5.1.
- Environmental qualification of equipment is presented in Section 3.11.
- Thermal stresses on the reactor coolant system are presented in Section 5.2.

6.3.2.7 Provisions for Performance Testing

The passive core cooling system includes the capability for determination of the integrity of the pressure boundary formed by series passive core cooling system check valves. Additional information on testing can be found in Subsection 6.3.6.

6.3.2.8 Manual Actions

The passive core cooling system is automatically actuated for those events as presented in Subsection 6.3.3. Following actuation, the passive core cooling system continues to operate in the injection mode until the transition to recirculation initiates automatically following containment floodup.

Although the passive core cooling system operates automatically, operator actions would be beneficial, in some cases, in reducing the consequences of an event. For example, in a steam generator tube rupture with no operator action, the protection and safety monitoring system automatically terminates the leak, prevents steam generator overfill, and limits the offsite doses. However, the operator can initiate actions, similar to those taken in current plants, to identify and isolate the faulted steam generator, cool down and depressurize the reactor coolant system to terminate the break flow to the steam generator, and stabilize plant conditions.

The operator can take action to avoid actuation of the automatic depressurization system when it is not needed. For non-LOCA events during which ac power has been lost for more than 22 hours, the protection and monitoring system will automatically open the automatic depressurization system

valves to begin a controlled depressurization of the reactor coolant system and, eventually, containment floodup and recirculation prior to depletion of the actuation batteries. However, the operators can take action to block actuation of the automatic depressurization system should actuation be deemed unnecessary based on reactor coolant system conditions. This action allows closed loop passive residual heat removal heat exchanger operation to continue as long as acceptable reactor coolant system conditions are maintained.

Section 7.4 describes the anticipated operator actions to block the unnecessary automatic depressurization system actuation and to achieve recovery using available systems to remove decay heat. Section 7.5 describes the post-accident monitoring instrumentation available to the operator in the main control room following an event.

6.3.3 Performance Evaluation

The events described in Subsection 6.3.1 result in passive core cooling system actuation and are mitigated within the performance criteria. For the purpose of evaluation in Chapters 15 and 19, the events that result in passive core cooling system actuation are categorized as follows:

A. Increase in heat removal by the secondary system

   1. Inadvertent opening of a steam generator power-operated atmospheric steam relief or safety valve

   2. Steam system piping failure

B. Decrease in heat removal by the secondary system

   1. Loss of Main Feedwater Flow

   2. Feedwater system piping failure

C. Decrease in reactor coolant system inventory

   1. Steam generator tube rupture

   2. Loss of coolant accident from a spectrum of postulated reactor coolant system piping failures

   3. Loss of coolant due to a rod cluster control assembly ejection accident

      (This event is enveloped by the reactor coolant system piping failures.)

D. Shutdown Events (Chapter 19)

   1. Loss of Startup Feedwater

   2. Loss of normal residual heat removal system with reactor coolant system pressure boundary intact

   3. Loss of normal residual heat removal system during mid-loop operation

   4. Loss of normal residual heat removal system with refueling cavity flooded

The events listed in groups A and B are non-LOCA events where the primary protection is provided by the passive core cooling system passive residual heat removal heat exchanger. For these events, the passive residual heat removal heat exchanger is actuated by the protection and monitoring system for the following conditions:

- Steam generator low narrow range level, coincident with startup feedwater low flow
- Steam generator low wide range level
- Core makeup tank actuation
- Automatic depressurization actuation
- Pressurizer water level - High 3
- Manual actuation

The events listed in group C above are events involving the loss of reactor coolant where the primary protection is by the core makeup tanks and accumulators. For these events the core makeup tanks are actuated by the protection and monitoring system for the following conditions:

- Pressurizer low pressure
- Pressurizer low level
- Steam line low pressure
- Containment high pressure
- Cold leg low temperature
- Steam generator low wide range level, coincident with reactor coolant system high hot leg temperature
- Manual actuation

In addition to initiating passive core cooling system operation, these signals initiate other safeguards automatic actions including reactor trip, reactor coolant pump trip, feedwater isolation, and containment isolation. The passive core cooling system actuation signals are described in Section 7.3.

The core makeup tanks and passive residual heat removal heat exchangers are also actuated by the Diverse Actuation System as described in Subsection 7.7.1.11.

Upon receipt of an actuation signal, the actions described in Subsection 6.3.2.1 are automatically initiated to align the appropriate features of the passive core cooling system.

For non-LOCA events, the passive residual heat removal heat exchanger is actuated so that it can remove core decay heat. The passive residual heat removal heat exchanger can operate for at least 72 hours after initiation of a design basis event to satisfy Condition I, II, III and IV safety evaluation criteria described in the relevant safety analyses. Subsection 6.3.3.2.1.1 provides an evaluation of the duration of the passive residual heat removal heat exchanger operation using the LOFTRAN code described in Subsection 15.0.11.2. In this evaluation it is assumed that the operators power

down the protection and monitoring actuation cabinets in the 22 hour time frame prior to the automatic timer actuating ADS.

In addition to mitigating the initiating events, the passive residual heat removal heat exchanger is capable of cooling the reactor coolant system to the specified safe shutdown condition of 420°F within 36 hours as described in Subsection 19E.4.10.2. A non-bounding, conservative analysis of the plant response during operator-initiated, extended operation of the passive residual heat removal heat exchanger is demonstrated in the shutdown temperature evaluation of Subsection 19E.4.10.2. The closed-loop cooling mode allows the reactor coolant system pressure to decrease and reduces the stress in the reactor coolant system and connecting pipe.

For loss of coolant accidents, the core makeup tanks deliver borated water to the reactor coolant system via the direct vessel injection nozzles. The accumulators deliver flow to the direct vessel injection line whenever reactor coolant system pressure drops below the tank static pressure. The in-containment refueling water storage tank provides gravity injection once the reactor coolant system pressure is reduced to below the injection head from the in-containment refueling water storage tank. The passive core cooling system flow rates vary depending upon the type of event and its characteristic pressure transient.

As the core makeup tanks drain down, the automatic depressurization system valves are sequentially actuated. The depressurization sequence establishes reactor coolant pressure conditions that allow injection from the accumulators, and then from the in-containment refueling water storage tank and the containment recirculation path. Therefore, an injection source is continually available. If onsite or offsite ac power has not been restored after 72 hours, the post-72 hour support actions described in Subsection 1.9.5.4 maintain this mode of core cooling and provide adequate decay heat removal for an unlimited time.

The transient analyses summarized in Chapter 15 are extended long enough to demonstrate the applicable safety evaluation criteria are met. It is expected that normal systems would be available such that operators could terminate the passive safety systems and proceed with an orderly shutdown. However, as discussed in Subsection 6.3.1.1.4, the passive systems are capable of bringing the plant to a safe, stable condition for at least 72 hours in closed loop cooling mode and for longer in an open loop mode.

The events listed in group D occur during shutdown conditions that are characterized by slow plant responses and mild thermal-hydraulic transients. In addition, some of the passive core cooling system features need to be isolated to allow the plant to be in these conditions or to perform maintenance on the system. The protection and monitoring system automatically actuates gravity injection from the IRWST to provide core cooling during shutdown conditions prior to refueling cavity floodup. In addition, the operator can also manually actuate other passive core cooling system equipment, such as the passive residual heat removal heat exchanger, to provide core cooling during shutdown conditions when the equipment does not automatically actuate.

6.3.3.1 Increase in Heat Removal by the Secondary System

A number of events that could result in an increase in heat removal from the reactor coolant system by the secondary system have been postulated. For each event, consideration has been given to operation of nonsafety-related systems that could affect the event results. The operation of the startup feedwater system and the chemical and volume control system makeup pumps can affect these events. Analyses of these events, both with and without these nonsafety-related systems operating, are presented in Section 15.1. For those events resulting in passive core cooling system actuation, the following summarizes passive core cooling system performance.

6.3.3.1.1 Inadvertent Opening of a Steam Generator Relief or Safety Valve

Subsection 15.1.4 provides a description of an inadvertent opening of a steam generator relief or safety valve, including criteria and analytical results.

For this event, upon generation of a safeguards actuation signal the reactor is tripped, the core makeup tanks are actuated, and the reactor coolant pumps are tripped. Since the core makeup tanks are actuated, the passive residual heat removal heat exchanger is also actuated. The main steam lines are also isolated to prevent blowdown of more than one steam generator. The core makeup tanks operate with water recirculation injection to provide borated water to the reactor vessel downcomer plenum for reactor coolant system inventory and reactivity control. The trip of the reactor initially brings the reactor sub-critical. The rapid reactor coolant system cool down may result in the reactor returning to critical because the rate of positive reactivity addition (reactor coolant system temperature reduction) exceeds the rate of negative reactivity addition (boron from the core makeup tank). As the event continues, the reactor coolant system cooldown will slow down such that the continued core makeup tank boration will return the reactor sub-critical. The departure from nucleate boiling design basis is met, thereby preventing fuel damage.

During this event, the startup feedwater system is assumed to malfunction so that it injects water at the maximum flow rate. This injection continues until feedwater isolation occurs on low reactor coolant system temperature. The feedwater isolation signal terminates the feedwater addition from the startup feedwater system. The passive residual heat removal heat exchanger is also assumed to function in this event. This heat removal mechanism continues throughout the duration of the event.

For this event, the core makeup tanks operate in the water recirculation mode, providing boration and injection flow without draining. Therefore, the automatic depressurization system is not actuated on the lowering of the core makeup tank level.

Subsequent to stabilizing plant conditions and satisfying passive core cooling system termination criteria, the operator terminates passive core cooling system operation and initiates normal plant shutdown operations.

6.3.3.1.2 Steam System Pipe Failure

The most severe core conditions resulting from a steam system piping failure are associated with a double-ended rupture of a main steam line, occurring at zero power. Effects of smaller piping failures at higher power levels are bounded by the double-ended rupture at zero power. Subsection 15.1.5 provides a description of this event, including criteria and analytical results.

For this event, the passive core cooling system functions as described in Subsection 6.3.3.1.1 for the inadvertent opening of a steam generator relief or safety valve. However, this piping failure constitutes a more severe cooldown transient. The malfunctioning of the startup feedwater system is considered as it was in the inadvertent steam generator depressurization. The trip of the reactor initially brings the reactor sub-critical. The rapid reactor coolant system cool down may result in the reactor returning to critical because the rate of positive reactivity addition (reactor coolant system temperature reduction) exceeds the rate of negative reactivity addition (boron from the core makeup tank). As the event continues, the reactor coolant system cooldown will slow down such that the continued core makeup tank boration will return the reactor sub-critical. The departure from nucleate boiling design basis is met.

For this event, the reactor coolant system may depressurize sufficiently to permit the accumulators to deliver makeup water to the reactor coolant system. The core makeup tanks inject via water recirculation without draining. Therefore, the automatic depressurization system is not actuated on the lowering of the core makeup tank level. Subsequent to stabilizing plant conditions and satisfying

passive core cooling system termination criteria, the operator terminates passive core cooling system operation and initiates a normal plant shutdown.

6.3.3.2 Decrease in Heat Removal by the Secondary System

A number of events have been postulated that could result in a decrease in heat removal from the reactor coolant system by the secondary system. For each event, consideration has been given to operation of nonsafety-related systems that could affect the consequences of an event. The operation of the startup feedwater system and the chemical and volume control system makeup pumps can affect these events. Analyses of these events, both with and without these nonsafety-related systems operating, are presented in Section 15.2. For those events resulting in passive core cooling system actuation, the following summarizes passive core cooling system performance.

6.3.3.2.1 Loss of Main Feedwater

The most severe core conditions resulting from a loss of main feedwater system flow are associated with a loss of flow at full power. The heat-up transient effects of loss of flow at reduced power levels are bounded by the loss of flow at full power. Subsection 15.2.7 provides a description of this event, including criteria and analytical results.

For this event, the passive residual heat removal heat exchanger is actuated. If the core makeup tanks are not initially actuated, they actuate later when passive residual heat exchanger cooling sufficiently reduces pressurizer level. The passive residual heat removal heat exchanger serves to remove core decay heat and the core makeup tanks inject a borated water solution directly into the reactor vessel downcomer annulus. Since the reactor coolant pumps are tripped on actuation of the core makeup tanks, the passive residual heat removal heat exchanger operates under natural circulation conditions. The core makeup tanks operate via water recirculation, without draining, to maintain reactor coolant system inventory. Therefore, the automatic depressurization system is not actuated on the lowering of the core makeup tank level. Since the event is characterized by a heat-up transient, the injection of negative reactivity is not required and is not taken credit for in the analysis to control core reactivity.

The reactor coolant system does not depressurize to permit the accumulators to deliver makeup water to the reactor coolant system. Subsequent to stabilizing plant conditions and satisfying passive core cooling system termination criteria, the operator terminates passive core cooling system operation and initiates a normal plant shutdown.

6.3.3.2.1.1 Loss of AC Power to the Plant Auxiliaries

The most severe conditions resulting from a loss of ac power to the plant auxiliaries are associated with loss of offsite power with a loss of main feedwater system flow at full power. A loss of main feedwater with a loss of ac power lasting longer than a few hours presents the highest demand on passive residual heat removal heat exchanger operation. Subsection 15.2.6 provides a description of this short-term event, including criteria and analytical results.

During most events, the passive systems would be terminated in hours. When an ac power source is restored and passive core cooling system termination criteria are satisfied, the operator terminates passive core cooling system operation and initiates normal plant shutdown operations (as discussed in Subsection 6.3.1.2.1.)

However, if normal systems are not recovered as expected, the passive residual heat removal heat exchanger removes core decay heat and maintains acceptable reactor coolant system conditions for at least 72 hours. For a non-loss of coolant accident event where ac power is lost, the automatic depressurization system will actuate if operators do not act to avoid actuation when it is not needed.

For this long-term transient, it is assumed operators extend passive residual heat removal heat exchanger operation as described in Subsection 7.4.1.1.

The loss of main feedwater with loss of ac power event is analyzed for a 72 hour period, assuming operators extend closed-loop cooling beyond the time the automatic depressurization system would be actuated by the protection and safety monitoring system. This event mirrors the loss of ac power to the plant auxiliaries as described in Subsection 15.2.6, but the loss of ac power extends to 72 hours. In this event, operation of the passive residual heat removal heat exchanger continues for 72 hours and maintains acceptable reactor coolant system conditions such that the applicable Condition II safety evaluation criteria are met. If non-safety systems capable of removing decay heat are not recovered, operator action to actuate ADS is eventually required. This condition would then be bounded by the Condition III event of inadvertent ADS actuation.

Reactor coolant system leakage could limit closed-loop capacity. A reactor coolant system leak could produce conditions that would preclude the operators from de-energizing the loads on the Class 1E batteries, or could require the operators to re-energize the buses powered by the Class 1E batteries before 72 hours so that the automatic depressurization system valves could be actuated.

6.3.3.2.2 Feedwater System Pipe Failure

The most severe core conditions resulting from a feedwater system piping failure are associated with a double-ended rupture of a feed line at full power. Depending on break size and power level, a feedwater system pipe failure could cause either a reactor coolant system cooldown transient or a reactor coolant system heat-up transient. Only the reactor coolant system heat-up transient is evaluated as a feedwater system pipe failure, since the spectrum of cooldown transients is bounded by the steam system pipe failure analyses. The heat-up transient effects of smaller piping failures at reduced power levels are bounded by the double-ended feed line rupture at full power. Subsection 15.2.8 provides a description of this event, including criteria and analytical results.

For this event, the passive residual heat removal heat exchanger and the core makeup tanks are actuated. The passive residual heat removal heat exchanger serves to remove core decay heat, and the core makeup tanks inject a borated water solution directly into the reactor vessel downcomer. Since the reactor coolant pumps are tripped on actuation of the core makeup tanks, the passive residual heat removal heat exchanger operates under natural circulation conditions. The core makeup tanks operate via water recirculation to maintain reactor coolant system inventory. Since the event is characterized by a heat-up transient, the injection of negative reactivity is not required and is not taken credit for in the analysis to control core reactivity.

The reactor coolant system does not depressurize to permit the accumulators to deliver makeup water to the reactor coolant system. Subsequent to stabilizing plant conditions and satisfying passive core cooling system termination criteria, the operator terminates passive core cooling system operation and initiates normal plant shutdown operations.

6.3.3.3 Decrease in Reactor Coolant System Inventory

A number of events have been postulated that could result in a decrease in reactor coolant system inventory. For each event, consideration has been given to operation of nonsafety-related systems that could affect the consequences of the event. The operation of the startup feedwater system and the chemical and volume control system makeup pumps can affect these events. Analyses of these events, both with and without these nonsafety-related systems operating, are presented in Section 15.6. For those events which result in passive core cooling system actuation, the following summarizes passive core cooling system performance.

6.3.3.3.1 Steam Generator Tube Rupture

Although a steam generator tube rupture is an event that results in a decrease in reactor coolant system inventory, severe core conditions do not result from a steam generator tube rupture. The event analyzed is a complete severance of a single steam generator tube that occurs at power with the reactor coolant contaminated with fission products, corresponding to continuous operation with a limited amount of defective fuel rods. Effects of smaller breaks are bounded by the complete severance. Subsection 15.6.3 provides a description of this event, including criteria and analytical results.

For this event, the nonsafety-related makeup pumps are automatically actuated when reactor coolant system inventory decreases and a reactor trip occurs, followed by actuation of the startup feedwater pumps. The startup feedwater flow initiates on low steam generator level following the reactor trip and automatically throttles feedwater flow to maintain programmed steam generator level, limiting overfill of the faulted steam generator. The makeup pumps automatically function to maintain the programmed pressurizer level. The operators are expected to take actions similar to those in current plants to identify and isolate the faulted steam generator, cooldown and depressurize the reactor coolant system to terminate the break flow into the steam generator, and stabilize plant conditions.

If the operator fails to take timely or correct actions in response to the leak, or if the makeup pumps and/or the startup feedwater pumps malfunction with excessive flow, then the water level in the faulted steam generator continues to increase. This actuates safety-related overfill protection and automatically isolates the startup feedwater pumps and the chemical and volume control system makeup pumps. The core makeup tanks subsequently actuate on low pressurizer level, if they are not already actuated. Actuation of the core makeup tanks automatically actuates the passive residual heat removal system heat exchanger.

The core makeup tanks operate via water recirculation to provide borated water directly into the reactor vessel downcomer to maintain reactor coolant system inventory. The passive residual heat removal heat exchanger serves to remove core decay heat. Since the reactor coolant pumps are automatically tripped on actuation of the core makeup tanks, the passive residual heat removal heat exchanger operates under natural circulation flow conditions. The passive residual heat removal heat exchanger, in conjunction with the core makeup tanks, remove core decay heat and reduce reactor coolant system temperature. As the reactor coolant system cools and the inventory contracts, pressurizer level and pressure decrease, equalizing with steam generator pressure and terminating break flow.

If the nonsafety-related systems fail to start, the core makeup tanks and the passive residual heat removal heat exchangers automatically actuate. Their response is similar to that previously described, except that the faulted steam generator level is lower.

In these events, the plant conditions are stabilized without actuating the automatic depressurization system. Once plant conditions are stable, the operator completes a normal plant shutdown.

6.3.3.3.2 Loss of Coolant Accident

A loss of coolant accident is a rupture of the reactor coolant system piping or branch piping that results in a decrease in reactor coolant system inventory that exceeds the flow capability of the normal makeup system. Ruptures resulting in break flow within the capability of the normal makeup system do not result in decreasing reactor coolant system pressure and actuation of the passive core cooling system. The maximum break size for which the normal makeup system can maintain reactor coolant system pressure is obtained by comparing the calculated flow from the reactor coolant system through the postulated break with the charging pump makeup flow at a reactor coolant system pressure that is above the low pressure safeguards actuation setpoint. The makeup flow rate

from one makeup pump is adequate to maintain pressurizer pressure for a break through a 0.375-inch diameter hole. Therefore, the normal makeup system can maintain reactor coolant system pressure and permit the operator to execute an orderly shutdown.

For the purpose of evaluation, the spectrum of postulated piping breaks in the reactor coolant system is divided into major pipe breaks (large break) and minor pipe breaks (small breaks). The large break is a rupture with a total cross-sectional area equal to or greater than one square foot. The small break is defined as a rupture with a total cross-sectional area less than one square foot. Section 15.6 provides a description of this event, including criteria and analytical results.

For either event, the core makeup tanks are actuated upon receipt of a safeguards actuation signal. These tanks provide high-pressure injection. For large breaks, or after the automatic depressurization system is actuated, the accumulators also provide injection. After automatic depressurization system actuation, the in-containment refueling water storage tank, and the containment recirculation sump, provide low pressure injection.

The core makeup tanks can operate via water recirculation or steam-compensated injection during LOCAs. For smaller loss of coolant accidents, the reactor coolant system inventory is sufficient to establish water recirculation. For larger break sizes, when the pressurizer empties and voiding occurs in the cold legs steam-compensated injection initiates. When the cold legs void, the core makeup tank flow increases.

As the core makeup tanks drain, their level sequences the automatic depressurization system valve stages. As the level drops in the core makeup tank, the first-stage actuates. The first-stage valves are connected to the top of the pressurizer and discharge to the in-containment refueling water storage tank via the automatic depressurization system spargers. After a time delay, the second-stage is actuated. The second stage valves are connected with the same flow path as the first-stage valves. After an additional time delay, the third-stage is actuated. The third stage valves are identical to the second-stage valves. As the core makeup tank drops to a low level the fourth-stage is actuated. The fourth stage valves are connected to both hot legs and they discharge directly to the reactor coolant system loop compartments at an elevation just above the maximum containment floodup level.

The in-containment refueling water storage tank line squib valves are opened on the fourth stage actuation signal. Check valves arranged in series with the squib valves remain closed until the reactor depressurizes. After depressurization, the in-containment refueling water storage tank provides injection flow. The flow continues until containment floodup initiates containment recirculation.

For large breaks or following automatic depressurization system initiation, the accumulators provide rapid injection to the reactor vessel through the same connections used by the core makeup tanks and the in-containment refueling water storage tank injection. The accumulators begin to inject when the reactor coolant system depressurizes to about 700 psig. During the loss of coolant accident transient, flow to the reactor coolant system is dependent on the reactor coolant system pressure transient. The passive core cooling system water injected into the reactor coolant system provides for heat transfer from the core, prevents excessive core clad temperatures, and refloods the core (for large loss of coolant accidents) or keeps the core covered (for small loss of coolant accidents).

For small loss of coolant accidents, the control rods provide the initial core shutdown and the boron in the passive core cooling system tanks add negative reactivity to provide adequate shutdown at low temperatures.

Following the initial thermal-hydraulic transient for a loss of coolant accident event, the passive core cooling system continues to supply water to the reactor coolant system for long-term cooling. When the water level in the in-containment refueling water storage tank drops to a low-low level, the water

level in the containment has increased to a sufficient level to provide recirculation flow. The in-containment refueling water storage tank low-low level signal opens the squib valves in the lines between the containment and the gravity injection line. Initially, some of the water remaining in the tank drains to the containment until the water levels equalize. During this drain, injection to the core continues. The redundant flow paths provide continued cooling of the core by recirculation of the water in the containment. Figure 6.3-3 provides process flow information illustrating passive core cooling system performance for the various modes of system operation.

6.3.3.3.3 Passive Residual Heat Removal Heat Exchanger Tube Rupture

Although a passive residual heat removal heat exchanger tube rupture is an event that results in a decrease in reactor coolant system inventory, severe core conditions do not result from this event. There is a spectrum of heat exchanger tube leak sizes that are possible. For a small initiating leak, the passive core cooling system temperature instrumentation for the heat exchanger is used to identify that this is a heat exchanger leak. If the leak rate is less than the Technical Specification limits, plant operation can continue indefinitely. If the leak rate exceeds the Technical Specification limits the plant would be shut down to repair the heat exchanger.

If a severe tube leak occurs, the operators can use available instrumentation to identify the leak source. Action can then be taken to remotely isolate the heat exchanger by closing the motor-operated inlet isolation valve, which is normally open. The plant would be shut down to repair the heat exchanger.

This event is addressed in Section 15.6.

6.3.3.4 Shutdown Events

The passive core cooling system components are available whenever the reactor is critical and when reactor coolant energy is sufficiently high to require passive safety injection. During low-temperature physics testing, the core decay heat levels are low and there is a negligible amount of stored energy in the reactor coolant. Therefore, an event comparable in severity to events occurring at operating conditions is not possible and passive core cooling system equipment is not required. The possibility of a loss of coolant accident during plant startup and shutdown has been considered.

During shutdown conditions, some of the passive core cooling system equipment is isolated. In addition, since the normal residual heat removal system is not a safety-related system, its loss is considered.

As a result, gravity injection is automatically actuated when required during shutdown conditions prior to refueling cavity floodup, as discussed in Subsection 6.3.3.3.2. The operator can also manually actuate other passive core cooling system equipment, such as the passive residual heat removal heat exchanger, if required for accident mitigation during shutdown conditions when the equipment does not automatically actuate.

6.3.3.4.1 Loss of Startup Feedwater During Hot Standby, Cooldowns, and Heat-ups

During normal cooldowns, the steam generators are supplied by the startup feedwater pumps and steam from the steam generator is directed to either the main condenser or to the atmosphere. There are two nonsafety-related startup feedwater pumps, each of which is capable of providing sufficient feedwater flow to both steam generators to remove decay heat. These pumps are also automatically loaded on the nonsafety-related diesel-generators in the event offsite power is lost. Since these pumps are nonsafety-related, their failure is considered.

In the event of a loss of startup feedwater, the passive residual heat removal heat exchanger is automatically actuated on low steam generator water level and provides safety-related heat removal. The passive residual heat removal heat exchanger can maintain the reactor coolant system temperature, as well as provide for reactor coolant system cooldown to conditions where the normal residual heat removal system can be operated.

Since the chemical and volume control system makeup pumps are nonsafety-related, they may not be available. In this case, the core makeup tanks automatically actuate as the cooldown continues and the pressurizer level decreases. The core makeup tanks operate in a water recirculation mode to maintain reactor coolant system inventory while the passive residual heat removal heat exchanger is operating.

The in-containment refueling water storage tank provides the heat sink for the passive residual heat removal heat exchanger. Initially, the heat addition increases the water temperature. Within one to two hours, the water reaches saturation temperature and begins to boil. The steam generated in the in-containment refueling water storage tank discharges to containment. Because the containment integrity is maintained during cooldown Modes 3 and 4, the passive containment cooling system provides the safety-related ultimate heat sink. Therefore, most of the steam generated in the in-containment refueling water storage tank is condensed on the inside of the containment vessel and drains back into the in-containment refueling water storage tank via the condensate return gutter arrangement. This allows it to function as a heat sink for greater than 14 days, as discussed in Subsection 6.3.1.2.1.

6.3.3.4.2 Loss of Normal Residual Heat Removal Cooling With The Reactor Coolant System Pressure Boundary Intact

During normal shutdown conditions, the normal residual heat removal system is placed into service at about 350°F to accomplish reactor coolant system cooldown to refueling temperatures. The normal residual heat removal system piping is safety-related and meets seismic Category I requirements to prevent pipe breaks that could result in a significant loss of reactor coolant during system operation. The pump motors and the electrical power supplies are nonsafety-related.

The system is designed so that with single failure of an active system component, it can maintain the plant in a hot shutdown condition (<350°F). It is also possible to perform a reactor coolant system cooldown, but at a slower rate than with full system capability. Heat removed by the normal residual heat removal system is transferred to the component cooling water system and then to the service water system. The heat removal path is powered by the nonsafety-related diesel-generators in the event that offsite power is lost.

Since the normal residual heat removal pumps are nonsafety-related, they may not be available. In this case, the reactor coolant system pressure boundary remains intact and the passive residual heat removal heat exchanger provides the safety-related heat removal flow path.

The normal residual heat removal system is operated once the reactor coolant system temperature is too low to support sufficient steam production for decay heat removal. With a loss of shutdown cooling, the reactor coolant system temperature does not increase sufficiently to initiate steam generator steaming and to reduce steam generator level. This is because the steam generators are normally filled, with a nitrogen purge established, during shutdown conditions. The loss of cooling would result in the heat up of the reactor coolant system and a pressure increase resulting in the normal residual heat removal system relief valve opening. This loss of fluid would result in a decrease in the pressurizer level; which a low pressurizer level signal automatically actuates the core make tanks and the passive residual heat removal heat exchanger. The passive residual heat removal heat exchanger could also be manually actuated.

The passive residual heat removal heat exchanger is capable of functioning at low reactor coolant system temperatures and pressures, but it may not be able to maintain the initial reactor coolant system temperature. It can remove sufficient heat to maintain the reactor coolant system within the normal residual heat removal system design limits (400°F). This permits the normal residual heat removal system to be placed back in operation when it becomes available.

For this event, the reactor coolant system temperature is expected to increase and expand into the pressurizer. Reactor coolant system injection should not be required. The makeup pumps are aligned for automatic operation in the event that pressurizer level decreases, due to leakage. However, since they are nonsafety-related, they are considered unavailable for reactor coolant system makeup. Therefore should safety-related makeup be required, the core makeup tanks would automatically actuate and operate via water recirculation injection. For some scenarios, the core makeup tanks could drain down and actuate the automatic depressurization system valves. This would lead to injection via the in-containment refueling water storage tank and containment recirculation paths.

6.3.3.4.3 Loss of Normal Residual Heat Removal Cooling During Reduced Inventory

During reactor coolant system maintenance, the most limiting shutdown condition anticipated is with the reactor coolant level reduced and the reactor coolant system pressure boundary opened. It is normal practice to open the steam generator channel head manway covers to install the hot leg and cold leg nozzle dams during a refueling outage. In this situation, the normal residual heat removal system is used to cool the reactor coolant system. The AP1000 incorporates many features to reduce the probability of losing the normal residual heat removal system. However, since the normal residual heat removal system is nonsafety-related, its failure has been considered. The normal residual heat removal system is described Subsection 5.4.7.

In reduced inventory operation with the reactor coolant system depressurized and the pressure boundary opened, the passive residual heat removal heat exchanger is unable to remove the decay heat because the reactor coolant system cannot heat sufficiently above the in-containment refueling water storage tank temperature.

In this situation, core cooling is provided by the safety-related passive core cooling system, using gravity injection from the in-containment refueling water storage tank, while venting through the automatic depressurization system valves (and possibly through other openings in the reactor coolant system).

Prior to draining the reactor coolant system inventory below the no-load pressurizer level, the core makeup tanks are isolated to preclude inadvertent draining into the reactor coolant system while preparing for midloop operation. During plant shutdown, at 1000 psig, the accumulators are isolated to prevent inadvertent injection. In this configuration, the core makeup tanks and accumulators are isolated from the reactor coolant system, however these valves can be remotely opened with operator action to provide additional makeup water injection, if required.

Before the core makeup tanks are isolated, the automatic depressurization first-, second-, and third-stages valves are opened manually be the operators. The automatic depressurization system first-, second- and third-stage valves are required to remain open whenever the reactor coolant inventory is reduced or the upper core internals are in place. During an extended loss of normal residual heat removal system operation the stage one, two and three vent paths may not provide sufficient vent capability to allow gravity injection of water from the in-containment refueling water storage tank because of pressurizer surge line flooding. As a result, two of the automatic depressurization stage four paths are required to be operable in these conditions. The stage four valves are automatically opened by a signal from the protection and monitoring system on a low hot leg level signal following a time delay.

The in-containment refueling water storage tank injection squib valves automatically open via the same low hot leg level signal that opens the automatic depressurization stage four valves. The operators can also open these injection and depressurization valves via the diverse actuation system. Once these valves open, injection from the in-containment refueling water storage tank provides gravity injection for core cooling. When the in-containment refueling water storage tank level drops to a low level, the squib valves in the containment recirculation line automatically open. This action initiates containment recirculation flow, with flow passing through the in-containment refueling water storage tank gravity injection lines, which provides long-term core cooling.

This arrangement provides automatic core cooling protection, while in reduced inventory operation while also providing protection (an evacuation alarm and sufficient time to evacuate) for maintenance personnel in containment during midloop operation. The time delay also provides the operators with time to take actions to restore nonsafety-related decay heat removal prior to actuating the passive core cooling system.

During reduced inventory conditions the capability of closing the containment is required. After the containment is closed, containment recirculation can continue indefinitely, with the decay heat generating steam which condenses on the containment vessel and drains back into the in-containment refueling water storage tank.

6.3.3.4.4 Loss of Normal Residual Heat Removal Cooling During Refueling

The normal residual heat removal system is normally used for decay heat removal during refueling operation. Its failure is considered because it is not a safety-related system. In this case, it is assumed that the reactor vessel head is removed and the water from the in-containment refueling water storage tank has been transferred to the refueling cavity, which is flooded to its high level condition. The passive residual heat removal heat exchanger is not available and containment integrity is expected to be relaxed with air locks and/or equipment hatches open.

Assuming that the refueling cavity was just flooded when the normal residual heat removal system fails, the refueling cavity water heats up to saturation temperature in about nine hours. With the slow heat-up of the refueling cavity water, there is ample time to close containment before significant steaming to the containment begins. The Technical Specifications require that containment closure capability be maintained during refueling MODES such that closure of the containment can be assumed. With the containment closed, water will not be lost from containment and long-term cooling can be maintained without subsequent need for cooling water makeup. Without closing the containment, boiling would reduce the water level to the top of the fuel assemblies in about five days.

6.3.4 Post-72 Hour Actions

The AP1000 passive core cooling system design includes safety-related equipment that is sufficient to automatically establish and maintain safe shutdown conditions for the plant following design basis events. The passive core cooling system can maintain safe shutdown conditions for 72 hours after an event without operator action and without both nonsafety-related onsite and offsite power.

There is only one action that may be required to provide long-term core cooling. There is a potential need for containment inventory makeup. The need for makeup to containment is directly related to the leakrate from the containment. With the maximum allowable containment leakrate, makeup to containment is not needed for about one month. A safety-related connection is available in the normal residual heat removal system to align a temporary makeup source to containment.

6.3.5 Limits on System Parameters

The analyses show that the design basis performance of the passive core cooling system is sufficient to meet the core cooling requirements following an event, with the minimum engineered safety features equipment operating. To provide this capability in the event of the single failure of components, technical specifications are established for reactor operation. The technical specifications are provided in Chapter 16.

The passive core cooling system equipment is not required to operate to support either normal power operation or shutdown operation of the plant. This reduces the probability that the passive core cooling system equipment is unavailable due to maintenance. Planned maintenance on the passive core cooling system equipment is accomplished during shutdown operations when the core temperatures are low, decay heat levels are low, and the Technical Specifications do not require availability of the equipment.

The principal system parameters and the number of components that may be out of operation during testing, quantities and concentrations of coolant available, and allowable time for operation in a degraded status are provided in the technical specifications.

If efforts to restore the operable status of the passive core cooling system equipment are not accomplished within technical specification requirements, the plant is required to be placed in a lower operational mode.

6.3.6 Inspection and Testing Requirements

6.3.6.1 Preoperational Inspection and Testing

Preoperational inspections and tests of the passive core cooling system are performed to verify the operability of the system prior to loading fuel. This testing includes valve inspection and testing, flow testing, and verification of heat removal capability.

Preoperational testing of the passive core cooling system is completed in conjunction with testing of the reactor coolant system following flushing and hydrostatic testing, with the system cold and the reactor vessel head removed. The passive core cooling system is aligned for normal power operation. This testing provides the following information:

- Satisfactory safeguards actuation signal generation and transmission
- Valve operating times
- Injection starting times
- Injection delivery rates

The preoperational testing program includes testing of the following passive core cooling system components:

- Core makeup tanks
- Accumulators
- In-containment refueling water storage tank
- Containment recirculation

- Passive residual heat removal heat exchanger

Conformance with the recommendations of Regulatory Guide 1.79 is described in Subsection 1.9.1. Preoperational testing of the passive core cooling system is conducted in accordance with the requirements presented in Subsection 14.2.9.1.3.

6.3.6.1.1 Flow Testing

Initial verification of the resistance of the passive core cooling injection lines is performed by conducting a series of flow tests for the core makeup tanks, accumulators, in-containment refueling water storage tank, and containment recirculation piping. The calculated flow resistances are bounded by the resistances used in the Chapter 15 safety analyses.

6.3.6.1.2 Heat Transfer Testing

Initial verification of the heat transfer capability of the passive residual heat removal heat exchanger is performed by conducting a natural circulation test. This test is conducted during hot functional testing of the reactor coolant system. Measurements of heat exchanger flow rate and inlet and outlet temperatures are recorded, and calculations are performed to verify that the heat transfer performance of the heat exchanger is greater than that provided in Table 6.3-2.

6.3.6.1.3 Preoperational Inspections

Preoperational inspections are performed to verify that important elevations associated with the passive core cooling system components are consistent with the accident analyses presented in Chapter 15. The following elevations are verified:

- The bottom inside surface of each core makeup tank is at least 7.5 feet above the direct vessel injection nozzle centerline.
- The bottom inside surface of the in-containment refueling water storage tank is at least 3.4 feet above the direct vessel injection nozzle centerline.
- The centerline of the upper passive residual heat removal heat exchanger channel head is at least 26.3 feet above the hot leg centerline.
- The pH baskets are located below plant elevation 107 feet, 2 inches.

Inspections of the passive core cooling system tanks and pH adjustment baskets are conducted to verify that the actual tank volumes are greater than or equal to volume assumed in the Chapter 15 accident analyses. Inspections to determine dimensions of the core makeup tanks, accumulators, in-containment refueling water storage tank, and pH adjustment baskets are conducted, and calculations are performed to verify that actual volume is not less than the corresponding minimum required volume listed in Table 6.3-2.

6.3.6.2 In-Service Testing and Inspection

In-service testing and inspection of the passive core cooling system components and the associated support systems are planned. The passive core cooling system components and systems are designed to meet the intent of the ASME Operations and Maintenance (OM) Code, for in-service testing. A description of the in-service testing program is provided in Subsection 3.9.6.

Two basic types of in-service testing are performed on the passive core cooling system components:

- Periodic exercise testing of active components during power operation (for example, cycling of specific valves)
- Operability testing of specific passive core cooling system features during plant shutdown (for example, accumulator injection flow to the reactor vessel or leak testing of containment isolation valves during selected plant shutdown.

The passive core cooling system includes specific features to support in-service test performance:

- Remotely operated valves can be exercised during routine plant maintenance
- Level, pressure, flow, and valve position instrumentation is provided for monitoring required passive core cooling system equipment during plant operation and testing
- Permanently installed test lines and connections are provided for operability testing

6.3.6.3 Mitigation of Gas Accumulation

Periodic system surveillance and venting procedures, in addition to specific design features, are implemented that aim to prevent gas accumulation and minimize or eliminate gas whenever found. Locations identified by the gas accumulation assessment have been equipped with manual vent valves or continuously monitored and alarmed pipe stubs with manual vent valves. These locations are specified within the periodic system surveillance and venting procedures as locations of high importance. Locations outfitted with pipe stub collection and alarm features have Technical Specifications including Surveillance Requirements to continuously monitor for gas accumulation and Required Actions subsequent to identifying gas accumulation in those locations to vent the identified gas accumulation. Plant startup and operational procedures include venting and surveillance steps that provide a means to track and trend accumulated gas such that problem areas can be systematically identified, monitored, and corrected.

6.3.6.3.1 System Gas Accumulation Assessment

Reviews of pipe layout and routing drawings to identify high-point vent and low-point drain locations are included as part of system design finalization activities. This existing design activity was expanded for the AP1000 passive safety systems, to integrate the draft Interim Staff Guidance (ISG) document ISG-019 regarding gas intrusion assessment guidance into the design process, helping to confirm that the potential issues identified in Generic Letter 2008-01 have been addressed within the design. Westinghouse also performed a comprehensive assessment for gas intrusion within the passive safety systems, consistent with the methodology in NEI 09-10 as applied in current operating plants, and consistent with the additional guidance in the ISG.

6.3.6.3.2 System Design Features to Mitigate Gas Intrusion

The gas intrusion assessment described in Subsection 6.3.6.3.1 helped to identify:

- Potential gas accumulation locations in the passive core cooling system piping.
- Potential gas intrusion mechanisms during various plant conditions (including plant startup, shutdown, post-maintenance system restoration and filling, power operation, and accident conditions).

- Passive core cooling system design features to provide the capability to perform system high-point venting and to continuously monitor several high-point locations.

These passive core cooling system design features help to eliminate the potential for significant gas accumulation in specific passive safety system injection lines that could adversely impact passive safety system operation. System venting capabilities are provided for the following passive safety system locations:

- IRWST injection line squib valve inlet lines
  - Vents located at the piping high points upstream of the parallel paths in both IRWST safety injection lines
  - Vents located between the check and squib valves in each line of the parallel paths in both IRWST safety injection lines
- Core makeup tank outlet lines
  - Vents located upstream of the first check valves in both core makeup tank outlet lines
  - Vents located between the series check valves in the core makeup tank A outlet line
  - Vents located between the second check and manual isolation valves in both core makeup tank outlet lines
- Containment recirculation Line A
  - Vents located at the high points in the common containment recirculation Line A path between the recirculation squib valves and the IRWST injection line (before and after the spent fuel system connection tee)

The potential for gas accumulation in passive safety system IRWST injection lines following accumulator injection is precluded by connecting the accumulator injection line in the direct vessel injection line riser section vertically above the IRWST injection line connection to the direct vessel injection line riser.

In addition, passive safety system design features are provided to monitor for gas accumulation at several specific locations. These design features include pipe stub gas collection chambers with redundant instrumentation at each high point, are continuously monitored and alarmed, have hard piped vent lines, are accessible during power operation, and include Technical Specifications and Surveillance Requirements specifically intended to identify unintended gas accumulations that could potentially challenge passive safety system operability for the following locations:

- Core makeup tank inlet highpoints
- Passive residual heat removal heat exchanger inlet high point
- IRWST injection line squib valve outlet high points

To ensure that all of the vent locations identified above function properly, notes are included on the system piping and instrumentation diagrams that specify layout sloping requirements. The intent of the layout requirements is to help ensure that the installed vents can effectively vent accumulated gases from the associated line segments. These notes also appear on the isometric drawings to

make certain that the layout sloping requirements are observed during fabrication, construction, and installation.

The continuously monitored and alarmed pipe stub gas collection chamber, including Technical Specifications and Surveillance Requirements, was not utilized for the high points in the containment recirculation Line A because there are no credible postulated gas intrusion mechanisms by which gas is expected to migrate into these lines (except in the event of improper venting during line filling operations such as after maintenance). This isolated piping section is maintained in a standby condition prior to passive safety system actuation. This local high point is located between the containment recirculation squib valves and the IRWST injection line squib valves, and it remains connected to the IRWST so that the tank water elevation head maintains the pressure in this line prior to actuation.

Passive safety system locations equipped with manual vent valves will be inspected according to the system surveillance and venting procedures to eliminate any identified gas accumulation. Locations equipped with pipe stub gas collection and alarm features will be continuously monitored via alarm indications in the main control room. Because the locations with pipe stub collection and alarm features are continuously monitored and have Surveillance Requirements and Required Actions, the potential exists that these locations will be vented at RCS pressure. Consequently, these locations have manual vent valves and are hard-piped to either the IRWST or the reactor coolant drain tank for potential venting at RCS pressure.

For the AP1000, the structures, systems, and components (SSCs) of the passive safety systems that are used to establish and maintain safe shutdown conditions for the plant are identified and discussed in Subsections 7.4.1.1 and 7.4.2, and listed in Table 7.4-1. These same SSCs that provide the AP1000 safe shutdown capability also provide the passive, safety-related accident mitigation functions, including those that are equivalent to the emergency core cooling system, decay heat removal, and containment spray system functions for active plants specified in the generic letter.

6.3.7 Instrumentation Requirements

Instrumentation channels employed for actuation of passive core cooling system operation are described in Section 7.3. This subsection describes the instrumentation provided for monitoring passive core cooling system components during normal plant operation and also during passive core cooling system post-accident operation. Alarms are annunciated in the main control room.

6.3.7.1 Pressure Indication

6.3.7.1.1 Accumulator Pressure

Two pressure channels are installed on each accumulator. The pressure indications are used to confirm that accumulator pressure is within bounds of the assumptions used in the safety analysis. Each channel provides pressure indication in the main control room and also provides high-pressure and low-pressure alarms.

6.3.7.1.2 Passive Residual Heat Removal Heat Exchanger Pressure

One pressure indicator is installed on the passive residual heat removal heat exchanger inlet line. The pressure indication is used to assist the operators in determining if there is a leak in the passive residual heat removal heat exchanger. The instrument provides pressure indication in the main control room.

6.3.7.2 Temperature Indication

6.3.7.2.1 Core Makeup Tank Inlet Line Temperature

Individual temperature channels are installed on the inlet line for each core makeup tank. The temperature indication is used to determine if there is a sufficient thermal gradient for system operation. Each channel provides temperature indication in the main control room and also provides a low-temperature alarm.

6.3.7.2.2 Passive Residual Heat Removal Heat Exchanger Inlet Temperature

One temperature channel is installed on the inlet line to the passive residual heat removal heat exchanger. The temperature indication is used to detect reactor coolant system leakage into the passive residual heat removal heat exchanger, either through the discharge valves or from tube leakage into the in-containment refueling water storage tank, and to identify the leakage path. The channel provides temperature indication in the main control room and also provides a high-temperature alarm.

6.3.7.2.3 In-Containment Refueling Water Storage Tank Temperature

Four temperature channels are installed on the in-containment refueling water storage tank. The temperature indications are used to confirm that in-containment refueling water storage tank temperature is within the bounds of the assumptions used in the safety analysis. The temperature indications are also used to monitor in-containment refueling water storage tank temperature during passive core cooling system operation. Each channel provides temperature indication and high-temperature alarms in the main control room.

6.3.7.2.4 Core Makeup Tank Outlet Line Temperature

Two temperature channels are installed, one on each core makeup tank outlet line. The temperature indication is used to detect reactor coolant system leakage into the core makeup tanks. Each channel provides temperature indication in the main control room and also provides a high-temperature alarm.

6.3.7.2.5 Direct Vessel Injection Line Temperature

Two temperature channels are installed, one on each direct vessel injection line. The temperature indication is used to detect reactor coolant system leakage back through the direct vessel injection lines to the core makeup tanks, accumulator, or in-containment refueling water storage tank. Each channel provides temperature indication in the main control room.

6.3.7.2.6 Passive Residual Heat Removal Heat Exchanger Inlet High Point Temperature

One temperature channel is installed on the passive residual heat removal heat exchanger inlet line. The temperature indication is used to determine that the temperature in the inlet is within the bounds of the assumptions used in the safety analysis. The channel provides temperature indication and a low temperature alarm in the main control room.

6.3.7.3 Passive Residual Heat Removal Heat Exchanger Outlet Flow Indication

Two flow channels are installed on the passive residual heat removal outlet line. The flow indications are used to monitor and control passive residual heat removal heat exchanger operation. Each channel provides flow indication in the main control room.

6.3.7.4 Level Indication

6.3.7.4.1 Core Makeup Tank Level

Ten level channels are installed on each core makeup tank. There are 2 wide range level channels which are used to confirm that the core makeup tanks are maintained at full water level during normal operation. There are four narrow range level channels which are used to control the actuation of the automatic depressurization system stage 1 valves. There are four narrow range level channels which are used to control the actuation of the automatic depressurization system stage 4 valves. Each wide range channel provides level indication and alarms in the main control room. Each narrow range channel provides level indication and alarms in the main control room and actuation of the automatic depressurization system. Each set of two narrow range channels share upper and lower level tap connections with the core makeup tanks; a failure modes and effects analysis confirms the ability of this arrangement to tolerate single failures (Reference 2).

6.3.7.4.2 Accumulator Level

Two level channels are installed on each accumulator. The level indications are used to confirm that accumulator level is within bounds of the assumptions used in the safety analysis. Each channel provides level indication and both high and low level alarms in the main control room.

6.3.7.4.3 In-Containment Refueling Water Storage Tank Level

Six level channels are installed on the in-containment refueling water storage tank. There are two narrow range channels. These level indications are used to confirm that in-containment refueling water storage tank level is within the bounds of the assumptions used in the safety analysis. There are four wide range level channels. These level indications are used to provide containment recirculation valve repositioning. Each channel provides level indication in the main control room and provides level alarms.

The in-containment refueling water storage tank is sized and the level alarm setpoints selected to provide adequate in-containment refueling water storage tank injection (and spill flow to containment for a direct vessel injection line break) until containment floodup is sufficient to provide recirculation flow.

6.3.7.4.4 Containment Level

Three level channels are installed on the containment. The level indications are used to monitor containment level from the reactor vessel cavity up to the maximum containment floodup elevation. Each channel provides level indication and alarms in the main control room.

6.3.7.5 Containment Radiation Level

Four channels are installed for the containment radiation. The radiation indications are used to monitor containment conditions. Each channel provides radiation indication and high radiation alarms in the main control room. Section 11.5 provides additional information.

6.3.7.6 Valve Position Indication and Control

6.3.7.6.1 Valve Position Indication

Individual valve position is provided for the safety-related, remotely actuated valves listed in Table 6.3-1. In addition, valve position is provided for certain manually operated valves, as described in Subsection 6.3.2.2.8.2, that can isolate redundant passive core cooling equipment, if

mispositioned. The incontainment refueling water injection check valves and containment recirculation check valves have nonintrusive position indication.

For certain passive core cooling system valves with position indication, alarms in the main control room are provided to alert the operators to valve mispositioning. For the passive residual heat removal heat exchanger discharge valves, valve position indication is used to initiate a reactor trip upon opening of these valves while the reactor is at power.

6.3.7.6.2 Valve Position Control

Valve controls are provided for remotely operated passive core cooling system valves. Table 6.3-1 provides a list of the passive core cooling system remotely operated valves. These remotely operated valves have controls in the main control room.

6.3.7.6.2.1 Accumulator Motor-Operated Valve Controls

As part of the plant shutdown procedures, the operator is required to close the accumulator motor-operated valves. This prevents a loss of accumulator water inventory to the reactor coolant system when the reactor coolant system is depressurized. The valves are closed after the reactor coolant system has been depressurized to below the setpoint to block the safeguards actuation signal. The redundant pressure and level alarms on each accumulator function to alert the operator to close these valves, if any are inadvertently left open. Power is locked out after the valves are closed. During plant startup, the operator is directed by plant procedures to energize and open these valves prior to reaching the reactor coolant system pressure setpoint that unblocks the safeguards actuation signal. Redundant indication and alarms are available to alert the operator if a valve is inadvertently left closed once the reactor coolant system pressure increases beyond the setpoint. Power is also locked out after these valves are opened.

The accumulator isolation valves are not required to move during power operation. For a description of limiting conditions for operation and surveillance requirements of these valves, refer to the technical specifications. The accumulator isolation valves receive a safeguards actuation signal to confirm that they are open in the event of an accident. As a result of the power lock out, technical specifications, and the redundant position indication and alarms, the valve controls are nonsafety-related.

6.3.7.6.2.2 In-Containment Refueling Water Storage Tank Injection Motor-Operated Valve Controls

The motor-operated valves in each in-containment refueling water storage tank injection line are normally open during all modes of normal plant operation. Power to these valves is locked out. Redundant valve position indication and alarms are provided to alert the operator if a valve is inadvertently closed. The technical specifications specify surveillances to show that these valves are open. These valves also receive a safeguards actuation signal to confirm that they are open in the event of an accident. As a result of the power lock out, the redundant position indication and alarms and the technical specifications the valve controls are nonsafety-related.

6.3.7.6.2.3 Passive Residual Heat Removal Heat Exchanger Inlet Motor-Operated Valve Control

The motor-operated valve in the passive residual heat removal heat exchanger inlet line is normally open during normal plant operation. Power to this valve is locked out. Redundant valve position indications and alarms are provided to alert the operator if the valve is open. This valve also receives an actuation signal to confirm that it is open in the event of an accident.

6.3.7.7 Automatic Depressurization System Actuation at 24 Hours

A timer is used to automatically actuate the automatic depressurization system if offsite and onsite power are lost for about 24 hours. This prevents discharging the Class 1E dc power sources such that they are no longer able to operate the automatic depressurization system valves. If power becomes available to the dc batteries and they are no longer discharging prior to activation of the timer, then the automatic depressurization system actuation would be delayed. If the plant does not need actuation of the automatic depressurization system based on having stable pressurizer level, full core makeup tanks, and high and stable in-containment refueling water storage tank levels, the operators are directed to de-energize all loads on the 24-hour batteries. This action will block actuation of the automatic depressurization system and allow for its actuation later should the plant conditions unexpectedly degrade.

6.3.8 Combined License Information

6.3.8.1 Containment Cleanliness Program

A program to limit the amount of debris that might be left in the containment following refueling and maintenance outages is described below. The cleanliness program will limit the storage of outage materials (such as temporary scaffolding and tools) inside containment during power operation to items that do not produce debris (physical or chemical), which could be transported to the containment recirculation screens, to the IRWST screens, or into a direct vessel injection or a cold leg LOCA break that becomes submerged during recirculation. The cleanliness program shall limit the amount of latent debris and fibrous material located within the containment, as identified in Subsection 6.3.2.2.7.1, item 12.

Administrative procedures implement the containment cleanliness program. Implementation of the program minimizes the amount of debris left in containment following personnel entry and exits. The program includes, as a minimum, the following:

Responsibilities

The program defines the organizational responsibilities for implementing the program; defines personnel and material controls; and defines the inspection and reporting requirements.

Implementation

Containment Entry/Exit

- Controls to account for the quantities and types of materials introduced into the containment.
- Limits on the types and quantities of materials, including scaffolding and tools, to ensure adequate accountability controls. This may be accomplished by the work management process. Storage of aluminum is prohibited without engineering authorization. Cardboard boxes or miscellaneous packing material is not brought into containment without approval.
- If entries are made at power, prohibited materials and limits on quantities of materials that may generate hydrogen are established.
- Controls for loose items, such as keys and pens, which could be inadvertently left in containment.
- Methods and controls for securing any items and materials left unattended in containment.

- Administrative controls for accounting for tools, equipment and other material are established.
- Administrative controls for accounting of the permanent removal of materials previously introduced into the containment.
- Limits on the types and quantities of materials, including scaffolding and tools, that may be left unattended in containment during outages and power operation. Types of materials considered are tape, labels, plastic film, and paper and cloth products.
- Requirements and actions to be taken for unaccounted for material.
- Requirements for final containment cleanliness inspections.
- Record keeping requirements for entry/exit logs.

Housekeeping

Housekeeping procedures require that work areas be maintained in a clean and orderly fashion during work activities and returned to original conditions (or better) upon completion of work.

Sampling Program

A sampling program is implemented consistent with NEI Guidance Report 04-07, "Pressurized Water Reactor Sump Performance Evaluation Methodology" as supplemented by the NRC in the "Safety Evaluation by The Office of Nuclear Reactor Regulation Related to NRC Generic Letter 2004-02, Nuclear Energy Institute Guidance Report (Proposed Document Number NEI 04-07), 'Pressurized Water Reactor Sump Performance Evaluation Methodology.'" Latent debris sampling is implemented before startup. The sampling is conducted after containment exit cleanliness inspections to provide reasonable assurance that the plant latent debris design bases are met. Sampling frequency and scope may be adjusted based on sampling results. Results are evaluated post-start up and any nonconforming results will be addressed in the Corrective Action Program.

6.3.8.2 Verification of Water Sources for Long-Term Recirculation Cooling Following a LOCA

The long-term core cooling considering debris resulting from a LOCA together with debris that exists before a LOCA is addressed in APP-GW-GLR-079 (Reference 3).

6.3.9 References

1. WCAP-8966, "Evaluation of Mispositioned ECCS Valves," September 1977.
2. WCAP-13594 (P), WCAP-13662 (NP), "FMEA of Advanced Passive Plant Protection System," Revision 1, June 1998.
3. APP-GW-GLR-079, "AP1000 Verification of Water Sources for Long-Term Recirculation Cooling Following a LOCA," Westinghouse Electric Company LLC.
4. APP-GW-GLN-147, "AP1000 Containment Recirculation and IRWST Screen Design," Westinghouse Electric Company LLC.

Table 6.3-1
Passive Core Cooling System - Remote Actuation Valves

	Normal Position	Actuation Position	Failed Position	Notes
Core Makeup Tanks				
CMT inlet isolation MOV (V002A/B)	Open	Open	As is	(1,4)
CMT outlet isolation AOV (V014A/B,V015A/B)	Closed	Open	Open	
Accumulators				
Accumulator discharge MOV (V027A/B)	Open	Open	As is	(2,4)
In-Containment Refueling Water Storage Tank				
IRWST injection line MOV (V121A/B)	Open	Open	As is	(2,4)
IRWST injection line squib (V123A/B, V125A/B)	Closed	Open	As is	
Containment Recirculation Sump Valves				
Recirculation line MOVs (V117A/B)	Open	Open	As is	(3,4)
Recirculation line squib valves (V118A/B, V120A/B)	Closed	Open	As is	
Passive Residual Heat Removal Heat Exchanger				
PRHR HX inlet MOV (V101)	Open	Open	As is	(2,4)
PRHR HX outlet AOVs (V108A/B)	Closed	Open	Open	
IRWST gutter isolation AOVs (V130A/B)	Open	Closed	Closed	
Automatic Depressurization System Valves				
ADS Stage 1 MOVs (V001A/B, V011A/B)	Closed	Open	As is	
ADS Stage 2 MOVs (V002A/B, V012A/B)	Closed	Open	As is	
ADS Stage 3 MOVs (V003A/B, V013A/B)	Closed	Open	As is	
ADS Stage 4 MOVs (V014A/B/C/D)	Open	Open	As is	(3,4)
ADS Stage 4 squib valves (V004A/B/C/D)	Closed	Open	As is	

Notes:
(1) These valves are normally in the correct post-accident position, but receive confirmatory actuation signals to redundant controllers.
(2) These valves are normally in the correct post-accident position with their power locked out. They also receive confirmatory actuation signals.
(3) These valves are normally in the correct post-accident position, but receive confirmatory actuation signals.
(4) The operation of these valves is not safety-related.

Table 6.3-2 (Sheet 1 of 2)
Component Data - Passive Core Cooling System

Passive RHR HX		
Number	1	
Type	Vertical C-Tube	
Case	Design	
Heat transfer (BTU/hr)	2.01 E+08	
	Tube side	Shell side
Fluid	Reactor coolant	IRWST water
Design flow (lb/hr)	5.03 E+05	N/A
Temperature in (°F)	567	120
out (°F)	199	N/A
Design pressure (psig)	2485	N/A
Design temperature (°F)	650	N/A
Material	Alloy 690	N/A
AP1000 equipment class	A	N/A
Core Makeup Tanks		
Number	2	
Type	Vertical, cylindrical, hemispherical heads	
Volume (cubic feet)	2500	
Design pressure (psig)	2485	
Design temperature (°F)	650	
Material	Carbon-steel, stainless steel clad	
AP1000 equipment class	A	
Accumulators		
Number	2	
Type	Spherical	
Volume (cubic feet)	2000	
Design pressure (psig)	800	
Design temperature (°F)	300	
Material	Carbon-steel, stainless steel clad	
AP1000 equipment class	C	

Table 6.3-2 (Sheet 2 of 2)
Component Data - Passive Core Cooling System

IRWST		
Number	1	
Type	Integral to containment internal structure	
Volume, minimum water (cubic feet)	73,100	
Design pressure (psig)	5	
Design temperature (°F)	150 *	
Material	Wetted surfaces are stainless steel	
AP1000 equipment class	C	
Spargers		
Number	2	
Type	Cruciform	
Flow area of holes (in^2)	274	
Design pressure (psig)	600	
Design temperature (°F)	500	
Material	Stainless Steel	
AP1000 equipment class	C	
pH Adjustment Baskets		
Number	4	
Type	Rectangular	
Volume minimum total (cubic feet)	560	
Material	Stainless steel	
AP1000 equipment class	C	
Screens	IRWST	Containment Recirculation
Number	3	2
Surface area, screen (square feet)	IRWST Screens A and B: ≥ 500 per screen IRWST Screen C: ≥ 1000 ft^2	≥ 2,500 per screen
Material	Stainless steel	Stainless steel
AP1000 equipment class	C	C

Note:
* Several times during plant life, the refueling water could reach 250°F.

Table 6.3-3 (Sheet 1 of 4)
Failure Mode and Effects Analysis -
Passive Core Cooling System Components

Component	Failure Mode	Plant Condition	Effect on System Operation	Failure Detection Method	Remarks
CMT outlet isolation AOVs V014A/B, V015A/B Normally closed/ fail open	Failure to open on demand	All design basis events	No safety-related effect since each valve has a redundant, parallel isolation AOV, actuated by a separate division, which provides flow through a parallel branch line for the affected CMT. The other CMT is unaffected.	Valve position indication alarm in MCR and at RSW	
CMT discharge line check valves V016A/B, V017A/B Normally open	Failure to close on reverse flow	All design basis events	No safety-related effect since each valve has a redundant, series check valve which closes to prevent reverse flow, during a cold leg (large) LOCA or cold leg balance line break, preventing accumulator flow from bypassing the reactor vessel.	No valve position indication	
Accumulator nitrogen supply/ vent valves V021A/B, V045 Normally closed/ fail closed	Spurious opening	All design basis events	No safety-related effect since each valve has either a normally closed redundant, series isolation SOV or a check valve in each vent flow path, that prevents accumulator nitrogen from leaking out of the accumulator, which could degrade accumulator injection.	No valve position indication Accumulator low pressure alarm in MCR and at RSW	
Accumulator nitrogen supply containment isolation AOV V042 Normally open/ fail closed	Failure to close on demand	All design basis events	No safety-related effect since each valve has a redundant, series isolation check valve which independently closes on reverse flow in the line, preventing reactor coolant from leaking out of containment.	Valve position indication alarm in MCR and at RSW	
Accumulator nitrogen supply containment isolation check valve V043 Normally open	Failure to close on reverse flow	All design basis events	No safety-related effect since each valve has a redundant, series isolation AOV, actuated by a separate division, which closes to prevent reactor coolant from leaking out of containment.	No valve position indication	

Table 6.3-3 (Sheet 2 of 4)
Failure Mode and Effects Analysis -
Passive Core Cooling System Components

Component	Failure Mode	Plant Condition	Effect on System Operation	Failure Detection Method	Remarks
PRHR HX outlet line isolation AOVs V108A/B Normally closed/ fail open	Failure to open	All design basis events	No safety-related effect since each valve has a redundant, parallel isolation AOV, actuated by a separate division, which opens to provide PRHR HX flow through a parallel branch line.	Valve position indication alarm in MCR and at RSW PRHR HX flow indication in MCR & RSW	
IRWST gravity injection line check valves V122A/B, V124A/B Normally closed	Failure to open	All design basis events	No safety-related effect since each valve has a redundant flow path through a check valve and a squib valve that open to provide gravity injection through a parallel branch line. The other IRWST gravity injection line is unaffected.	Valve position indication alarm in MCR and at RSW	
IRWST gravity injection line squib valves V123A/B, V125A/B Normally closed/ fail as is	Failure to open	All design basis events	No safety-related effect since each valve has a redundant flow path through a check valve and a squib valve that open to provide gravity injection through a parallel branch line. The other IRWST gravity injection line is unaffected.	Valve position indication alarm in MCR and at RSW	
IRWST gutter isolation valves V130A/B Normally open/ fail closed	Failure to close	All design basis events	No safety-related effect since each valve has a redundant, series isolation AOV, actuated by a separate division, which closes to divert the gutter flow into the IRWST.	Valve position indication alarm in MCR and at RSW	
Containment recirculation line check valves V119A/B Normally closed	Failure to open	All design basis events	No safety-related effect since each valve has a redundant flow path through a MOV and a squib valve, actuated by separate divisions, that open to provide recirculation through a parallel branch line. The other containment recirculation line is unaffected.	Valve position indication alarm in MCR and at RSW	

Table 6.3-3 (Sheet 3 of 4)
Failure Mode and Effects Analysis -
Passive Core Cooling System Components

Component	Failure Mode	Plant Condition	Effect on System Operation	Failure Detection Method	Remarks
Containment recirculation line squib valves V120A/B Normally closed/ fail as is	Failure to open	All design basis events	No safety-related effect since each valve has a redundant flow path through a MOV and a squib valve, actuated by separate divisions, that open to provide recirculation through a parallel branch line. The other containment recirculation line is unaffected.	Valve position indication alarm in MCR and at RSW	
Containment recirculation line squib valves V118A/B Normally closed/ fail as is	Failure to open	All design basis events	No safety-related effect since each valve has a redundant flow path through a check valve and a squib valve, actuated by separate divisions, that independently open to provide recirculation through a parallel branch line. The other containment recirculation line is unaffected.	Valve position indication alarm in MCR and at RSW	
Accumulator fill/ drain line isolation AOVs V232A/B Normally closed/ fail closed	Spurious opening	All design basis events	No safety-related effect since each valve has a normally closed redundant, series isolation valve in each drain flow path, which prevents draining water from the accumulator.	Valve position indication alarm in MCR and at RSW	
CMT fill line isolation AOVs V230A/B Normally closed/ fail closed	Spurious opening	All design basis events	No safety-related effect since each valve has a redundant, series check valve that closes on reverse flow and prevents draining water from the CMT.	Valve position indication alarm in MCR and at RSW	
CMT fill line check valves V231A/B Normally closed	Failure to close on reverse flow	All design basis events	No safety-related effect since each valve has a normally closed redundant, series AOV that prevents draining water from the CMT.	No valve position indication CMT low level indication alarm in MCR and at RSW	

Table 6.3-3 (Sheet 4 of 4)
Failure Mode and Effects Analysis -
Passive Core Cooling System Components

Component	Failure Mode	Plant Condition	Effect on System Operation	Failure Detection Method	Remarks
ADS Stage 1 to 3 MOVs and Stage 4 squib valves V001A/B, V011A/B, V002A/B, V012A/B, V003A/B, V013A/B, V004A/B/C/D Normally closed/ fail as is	Failure to open on demand	All design basis events	Failure to open blocks reactor coolant system vent flow through the one of two parallel branch lines of the affected ADS valve stage. Failure of a Stage 4 ADS valve is the most limiting single valve failure from the standpoint of ADS performance, based on this stage being the largest valve size. With the failure of ADS path, the ADS vent flow capacity is reduced, but safety analysis has demonstrated that the limiting Stage 4 ADS valve failure still meets design basis reactor coolant system venting requirements.	Valve position indication alarm in MCR and at RSW	
Class 1E direct current and UPS system distribution switchgear division IDSA DS 1 IDSB DS 1 IDSC DS 1 IDSD DS 1	Failure of a dc power source	All design basis events	Failure of a single dc power source from either Division A or Division B is the most limiting dc failure. The limiting PXS components are the IRWST injection/containment recirc. valves and the ADS valves. Failure of either of these dc power sources can prevent actuation of the ADS Stage 1 and Stage 3 MOVs in one group of ADS valves. The other ADS valves are unaffected by this failure. This dc power failure can also cause failure of one (of 4) IRWST injection squib valves and one (of 4) squib recirculation valves. The ADS vent flow and IRWST injection/containment recirculation capacity is reduced, but safety analysis has demonstrated that this limiting valve failure combination still meets design basis reactor coolant system venting/injection requirements.	Valves position indication alarm in MCR and at RSW	For other PXS componen ts, the loss of a Class 1E division either actuates the affected AOVs to a fail-safe position, or does not affect MOVs which are already in appropriat e positions

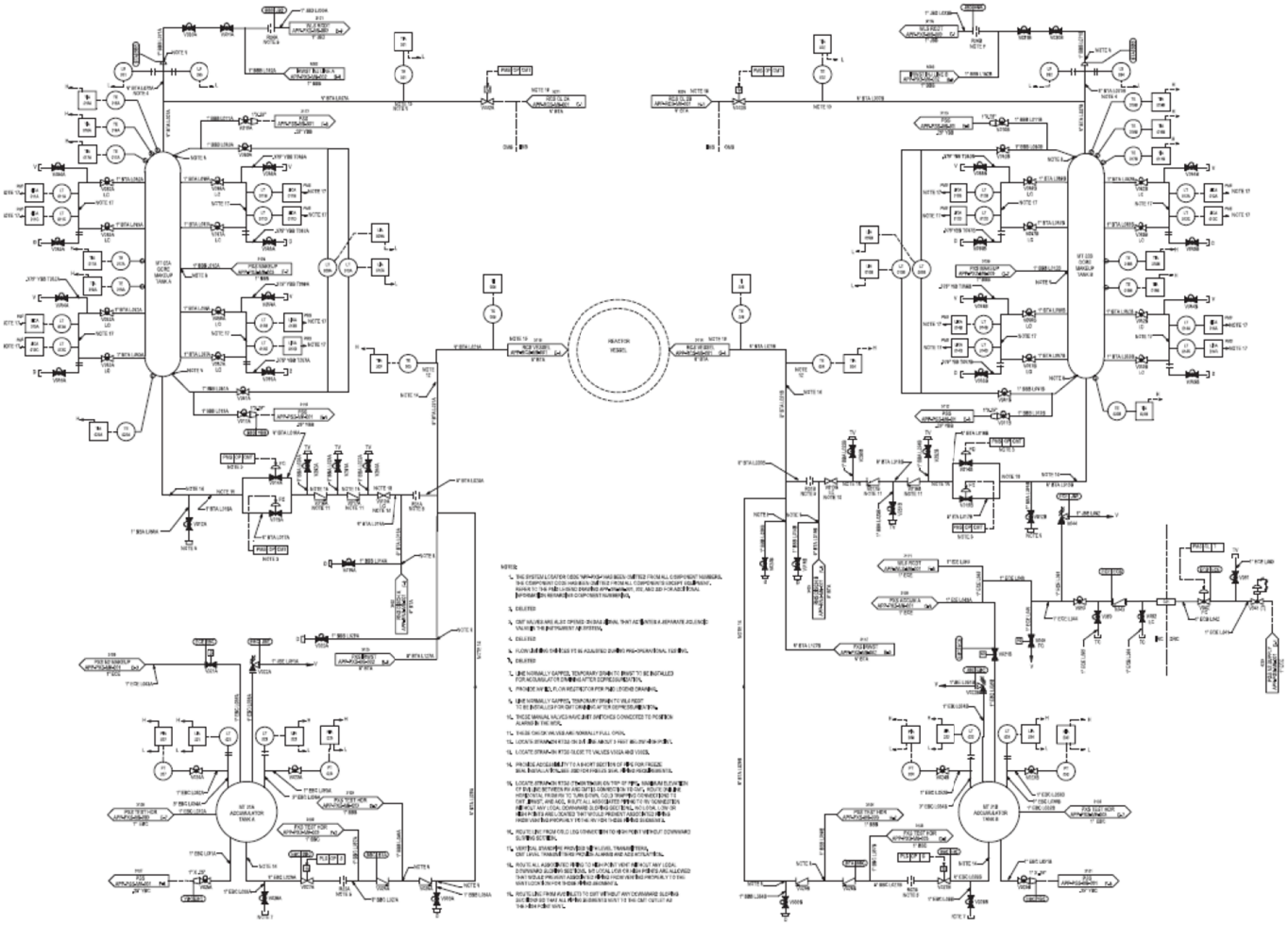

Figure 6.3-1
Passive Core Cooling System
Piping and Instrumentation Diagram (Sheet 1 of 3)

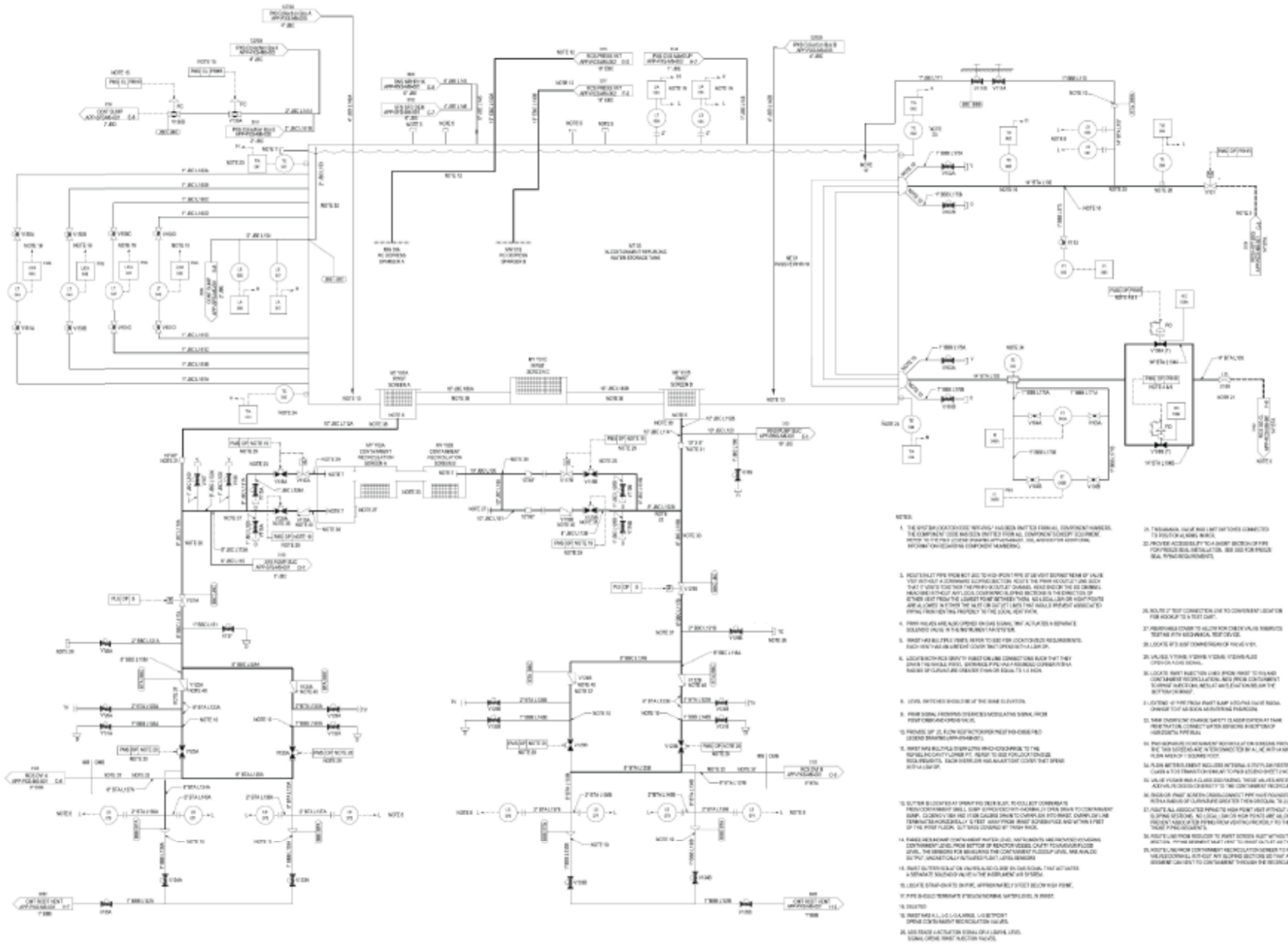

Figure 6.3-1
Passive Core Cooling System
Piping and Instrumentation Diagram (Sheet 2 of 3)

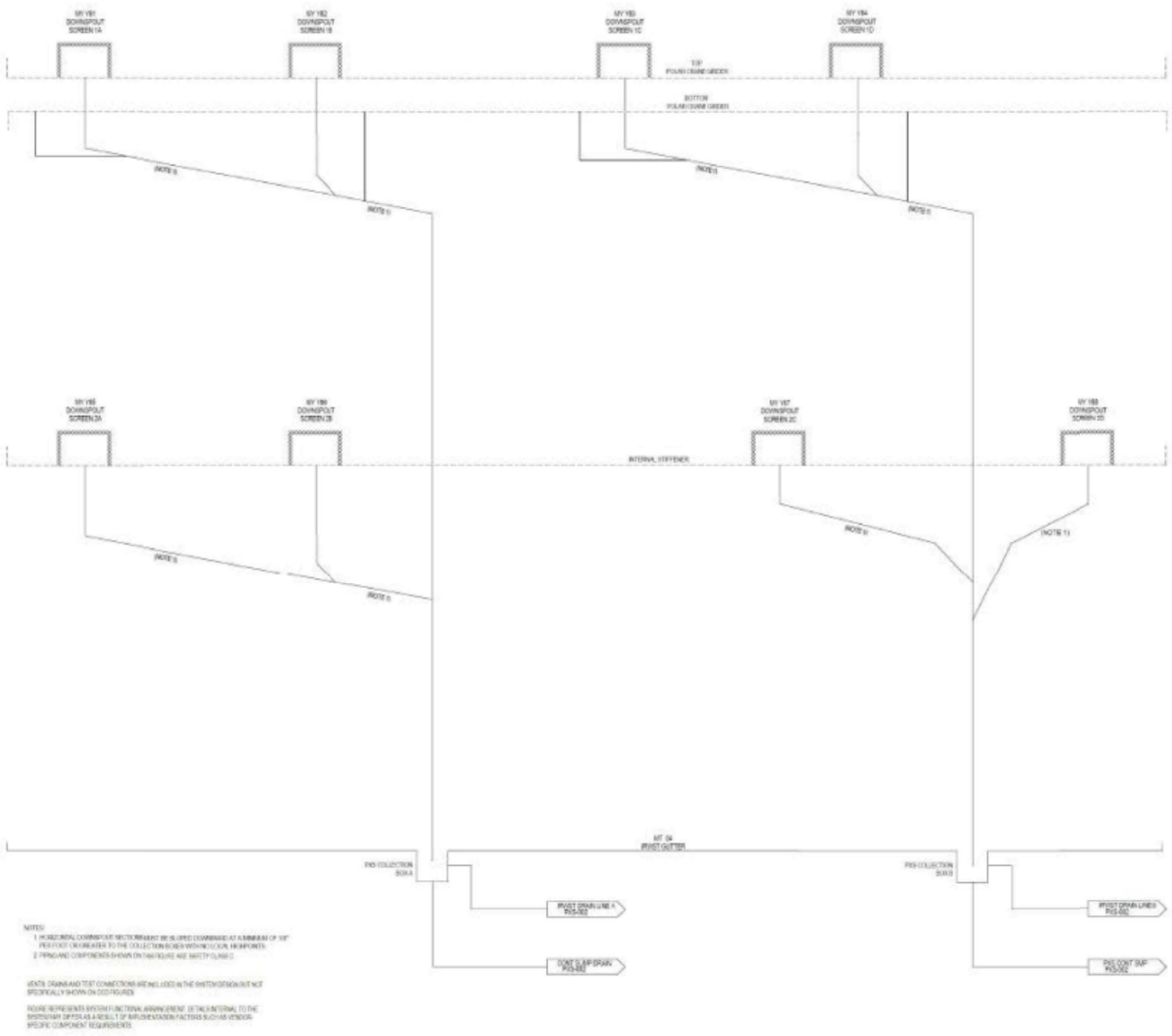

Figure 6.3-1
Passive Core Cooling System
Piping and Instrumentation Diagram (Sheet 3 of 3)

Figure 6.3-2 Not Used

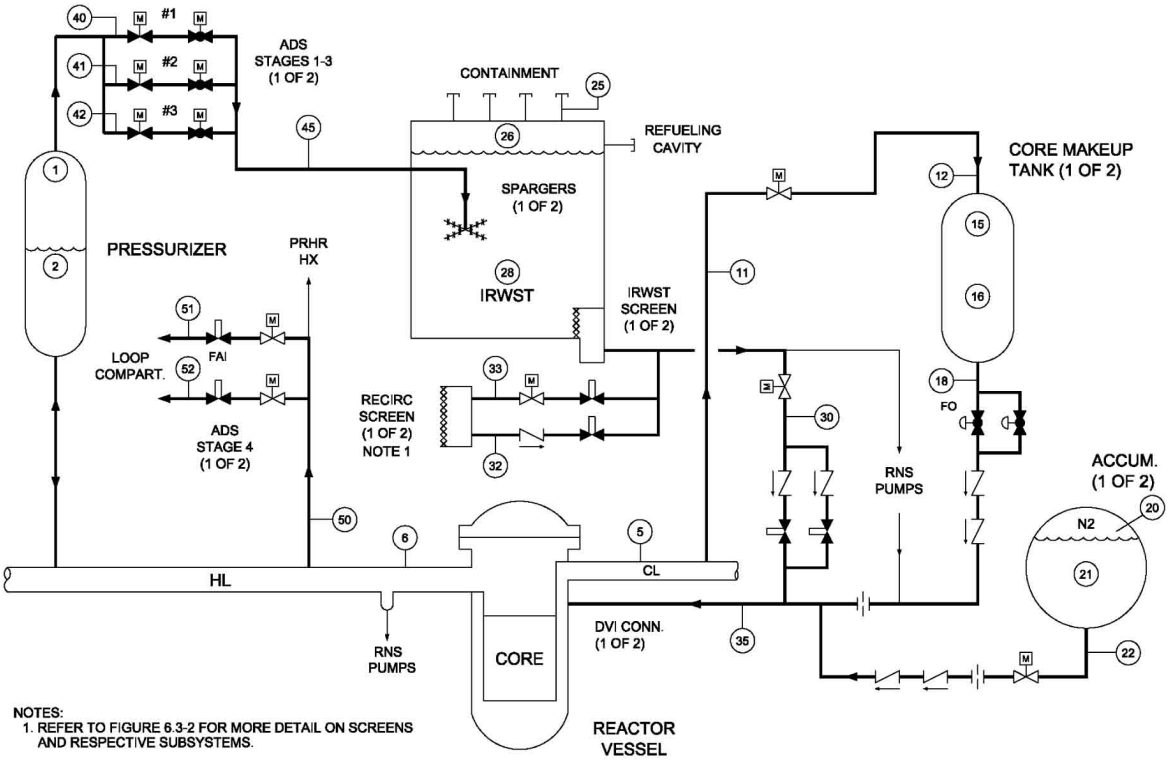

Inside Reactor Containment
Figure 6.3-3
Passive Safety Injection
(REF) RCS & PXS

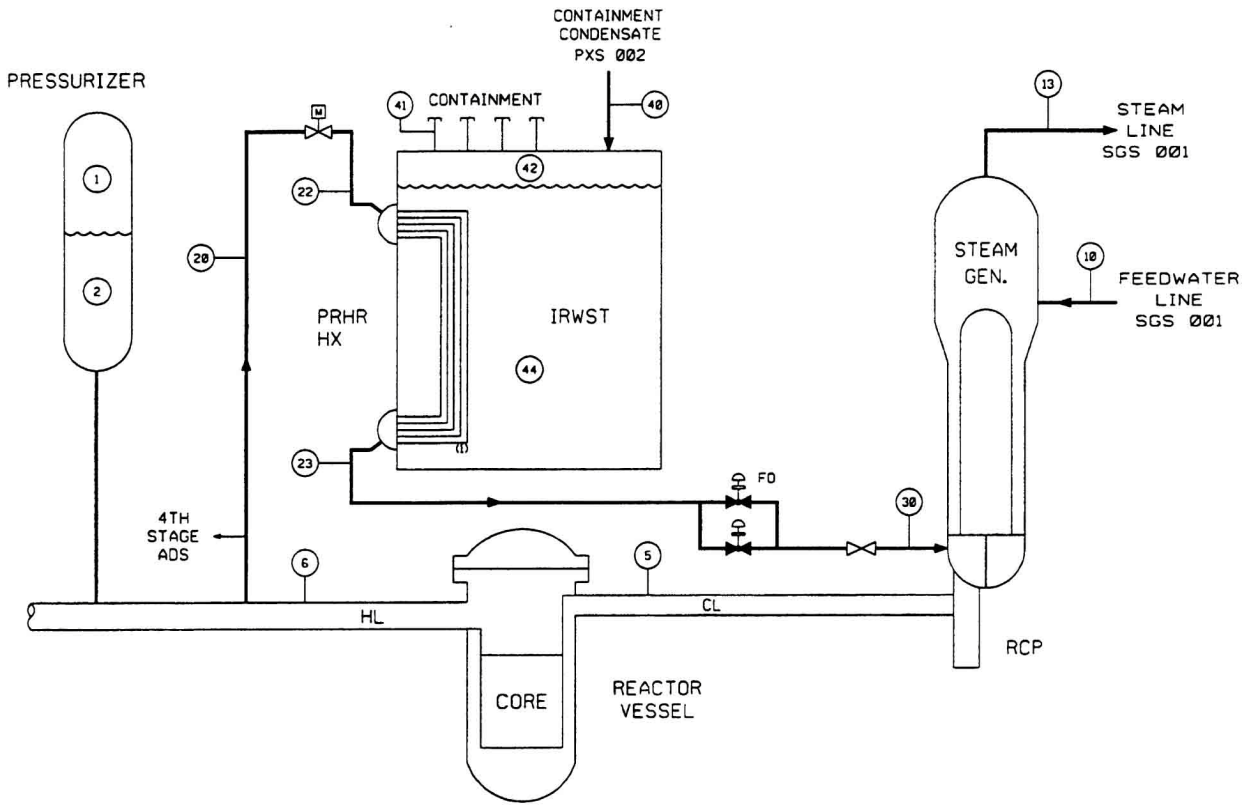

Inside Reactor Containment

Figure 6.3-4
Passive Decay Heat Removal
(REF) RCS & PXS

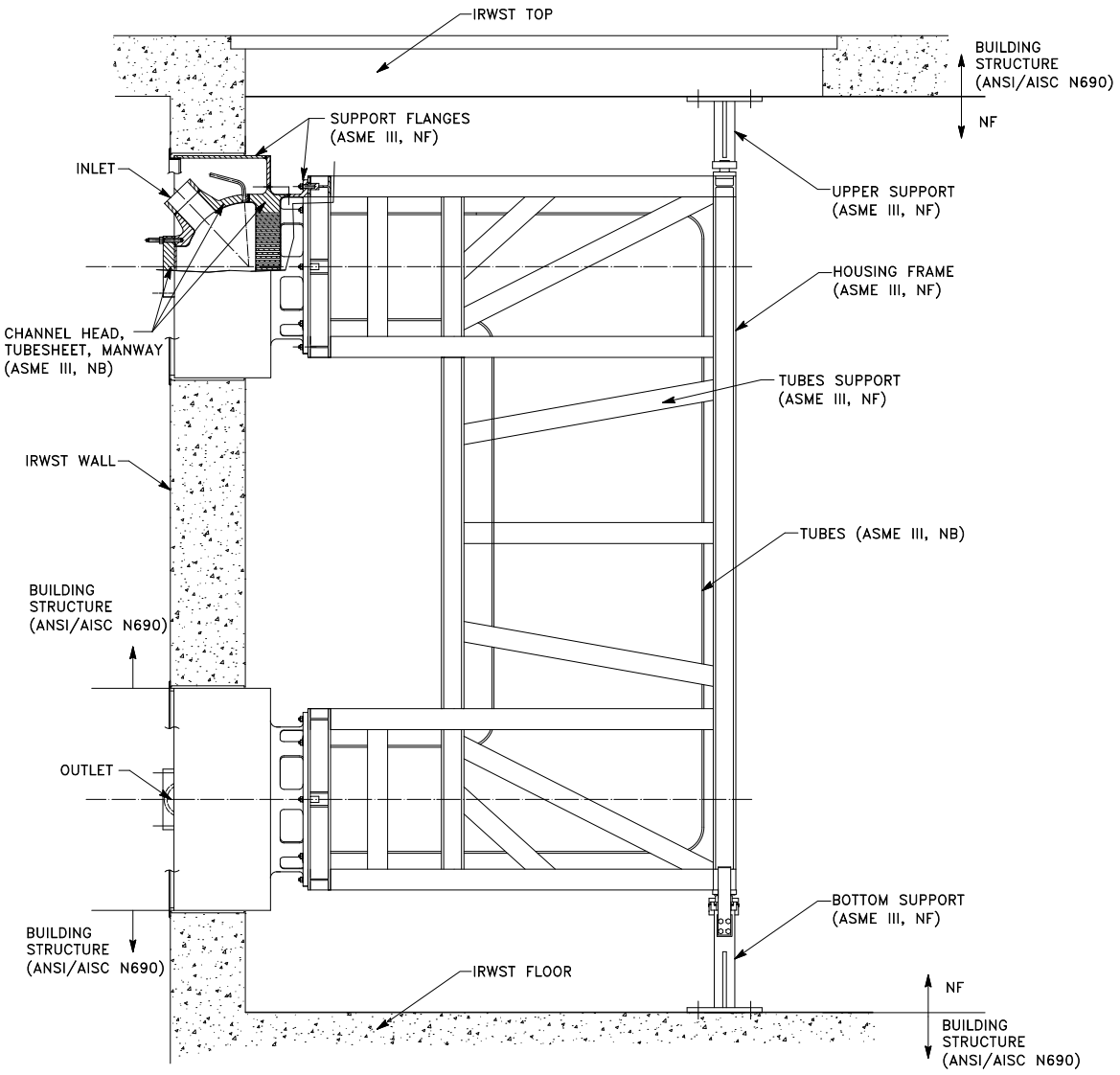

Figure 6.3-5
Passive Heat Removal Heat Exchanger

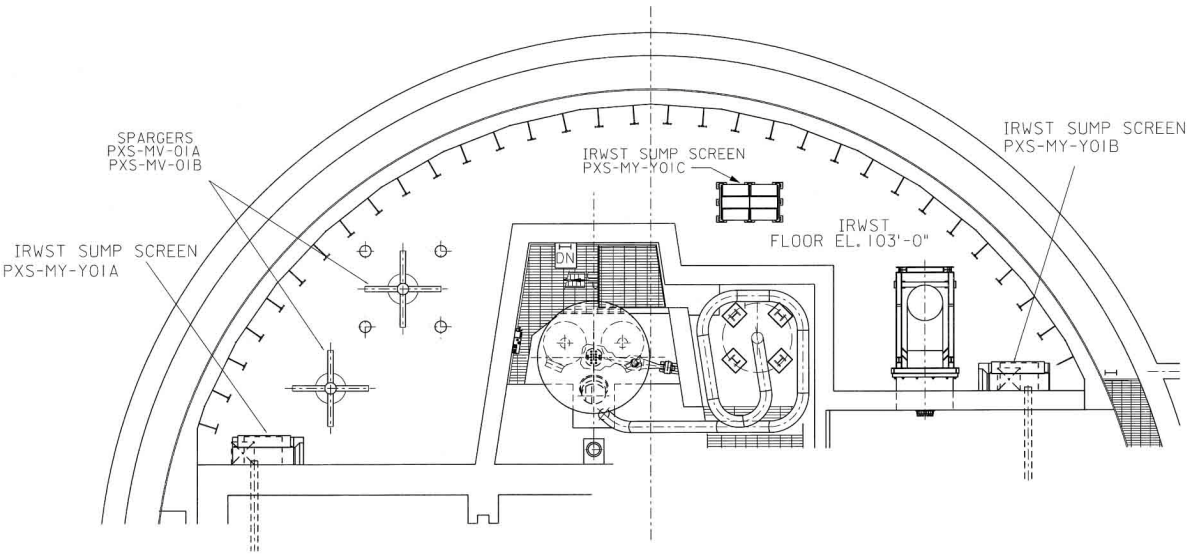

Figure 6.3-6
IRWST Screen Plan Location

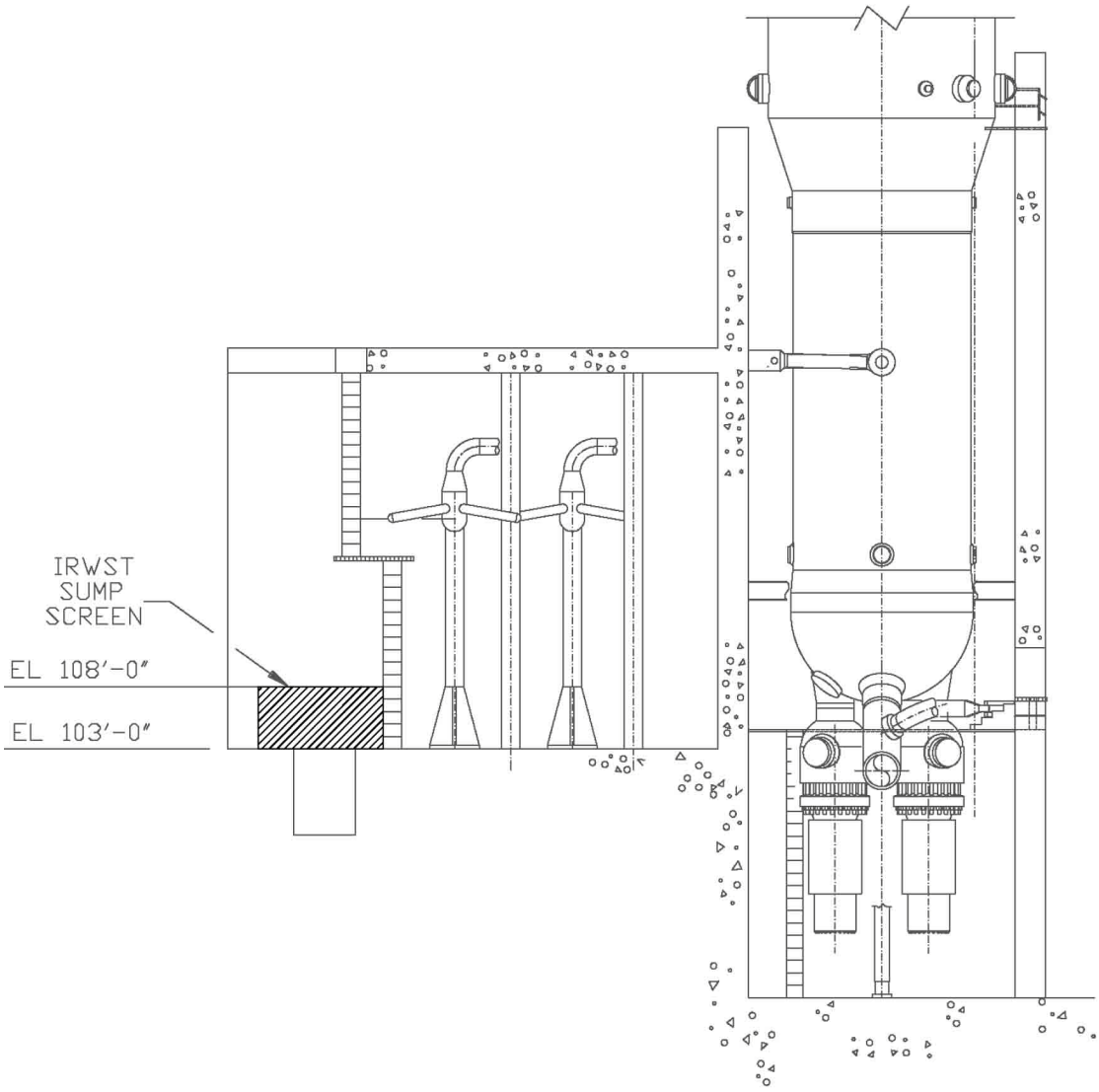

Figure 6.3-7
IRWST Screen Section Location

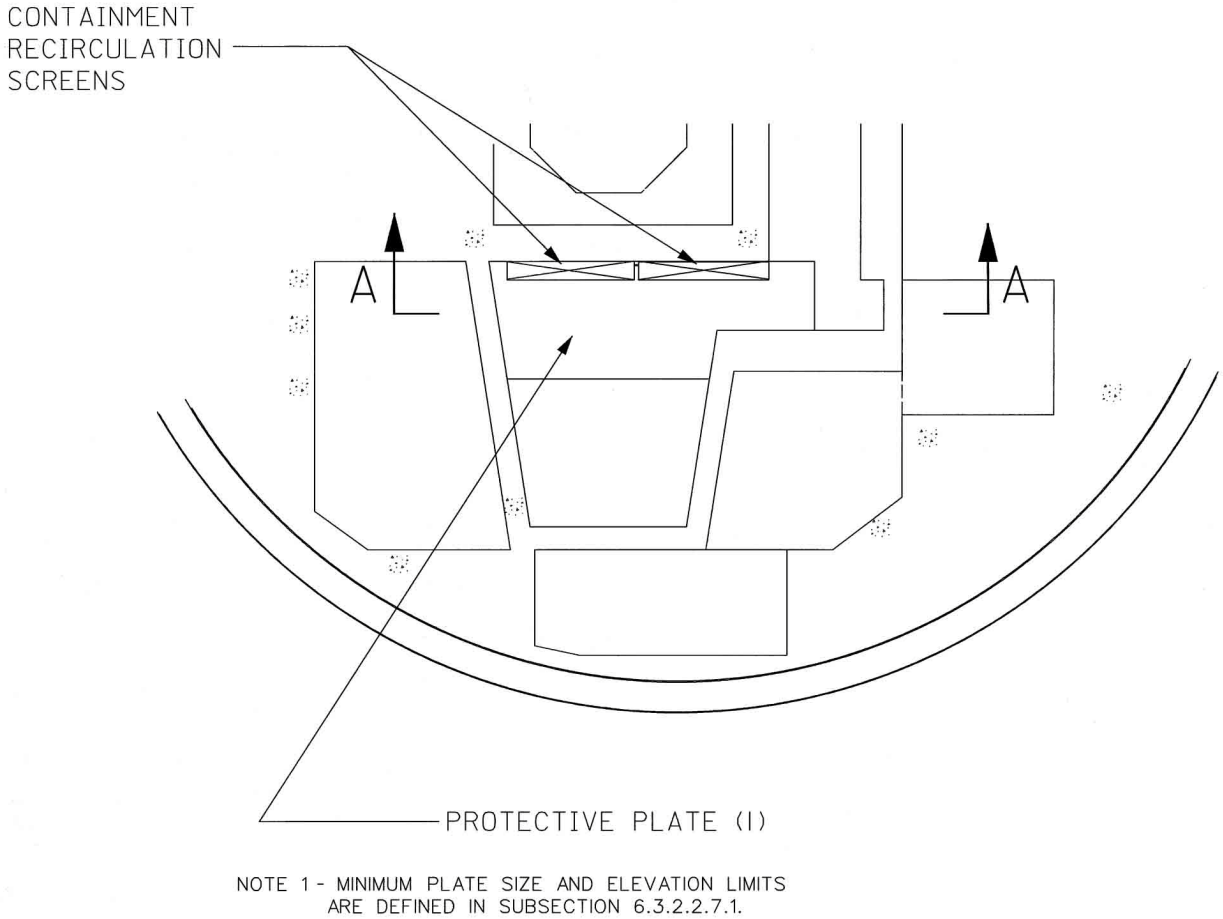

Figure 6.3-8
Containment Recirculation Screen Location Plan

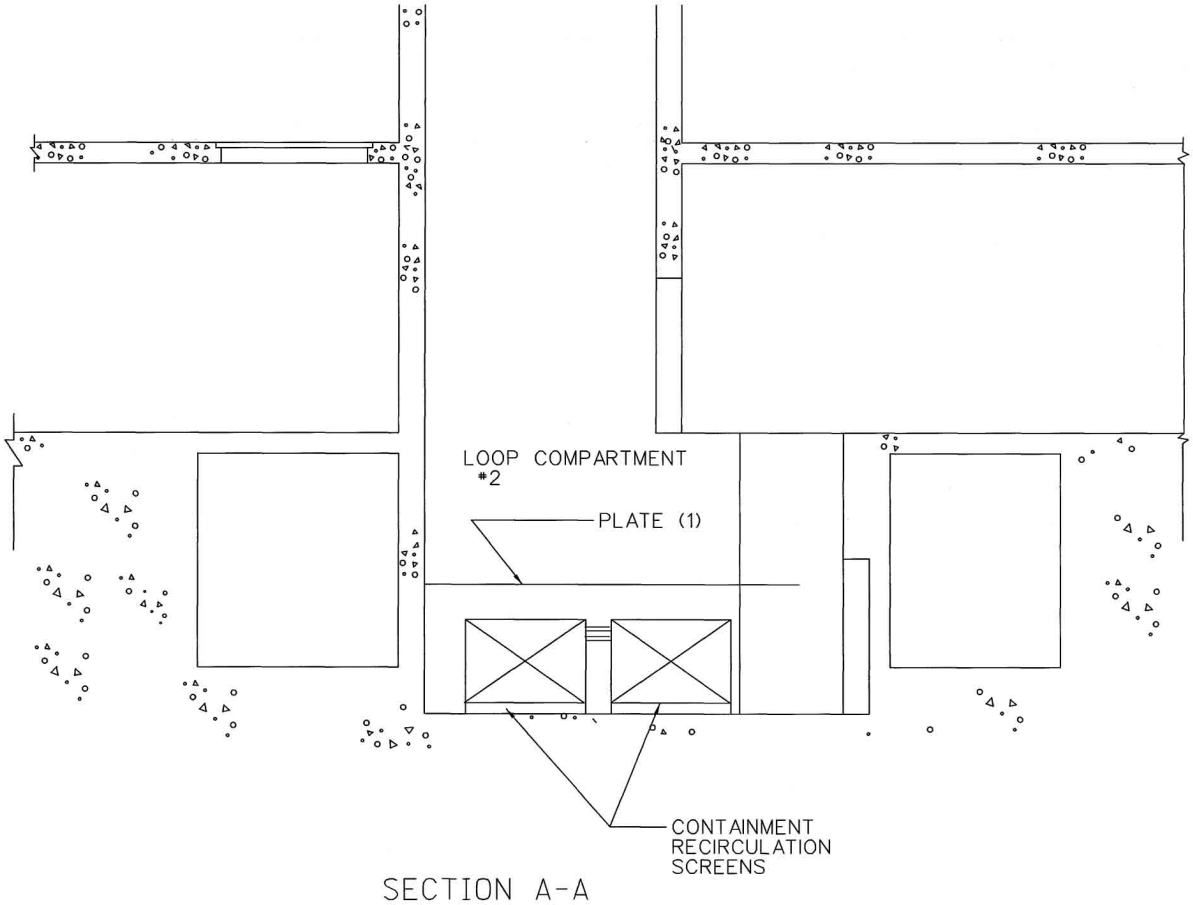

NOTE 1 - MINIMUM PLATE SIZE AND ELEVATION LIMITS ARE DEFINED IN SUBSECTION 6.3.2.2.7.1.

Figure 6.3-9
Containment Recirculation Screen Location Elevation

6.4 Habitability Systems

The habitability systems are a set of individual systems that collectively provide the habitability functions for the plant. The systems that make up the habitability systems are the:

- Nuclear island nonradioactive ventilation system (VBS)
- Main control room emergency habitability system (VES)
- Radiation monitoring system (RMS)
- Plant lighting system (ELS)
- Fire Protection System (FPS)

When a source of ac power is available, the nuclear island nonradioactive ventilation system (VBS) provides normal and abnormal HVAC service to the main control room (MCR), control support area (CSA), instrumentation and control rooms, dc equipment rooms, battery rooms, and the nuclear island nonradioactive ventilation system equipment room as described in Subsection 9.4.1.

Based on system design margin of the VBS, the MCR temperature and humidity at the higher Turkey Point Units 6 & 7 maximum safety wet bulb temperature will remain at or below the desired design points during normal operation.

If ac power is unavailable for more than 10 minutes or if “High-2” particulate or iodine radioactivity is detected in the main control room supply air duct, which would lead to exceeding General Design Criteria 19 operator dose limits, the protection and safety monitoring system automatically isolates the main control room and operator habitability requirements are then met by the main control room emergency habitability system (VES). The main control room emergency habitability system is capable of providing emergency ventilation and pressurization for the main control room. The main control room emergency habitability system also provides emergency passive heat sinks for the main control room, instrumentation and control rooms, and dc equipment rooms.

Radiation monitoring of the main control room environment is provided by the radiation monitoring system. Smoke detection is provided in the VBS system. Emergency lighting is provided by the plant lighting system. Storage capacity is provided in the main control room for personnel support equipment. Manual hose stations outside the MCR and portable fire extinguishers are provided to fight MCR fires.

6.4.1 Safety Design Basis

The safety design bases discussed here apply only to the portion of the individual system providing the specified function. The range of applicability is discussed in Subsection 6.4.4.

6.4.1.1 Main Control Room Design Basis

The habitability systems provide coverage for the main control room pressure boundary as defined in Subsection 6.4.2.1. The following discussion summarizes the safety design bases with respect to the main control room:

- The habitability systems are capable of maintaining the main control room environment suitable for prolonged occupancy throughout the duration of the postulated accidents discussed in Chapter 15 that require protection from the release of radioactivity. Refer to

Section 3.1 and Subsections 6.4.4 and 15.6.5.3 for a discussion on conformance with General Design Criterion 19 and to Section 1.9 for a discussion on conformance with Generic Issue B-66.

- The main control room is designed to withstand the effects of an SSE and a design-basis tornado.
- A maximum main control room occupancy of up to 11 persons can be accommodated.
- The radiation exposure of main control room personnel throughout the duration of the postulated limiting faults discussed in Chapter 15 does not exceed the limits set by General Design Criterion 19.
- The emergency habitability system maintains CO_2 concentration to less than 0.5 percent for up to 11 main control room occupants.
- The habitability systems provide the capability to detect and protect main control room personnel from external fire, smoke, and airborne radioactivity.
- Automatic actuation of the individual systems that perform a habitability systems function is provided. Smoke detectors, radiation detectors, and associated control equipment are installed at various plant locations as necessary to provide the appropriate operation of the systems.
- The habitability system provides the capability to provide passive air filtration for the main control room during VES operation. The filtration portion of the systems meets the intent of Regulatory Guide 1.52 (Reference 10).

The VBS system maintains design conditions in the MCR during all normal and accident conditions when the VBS system is operational. The VWS low capacity subsystem also serves the RNS and CVS pump room coolers. The nominal refrigeration capacity of each of the air-cooled chillers used in the VWS low capacity subsystem is 300 tons at an ambient dry bulb temperature of 115°F.

6.4.1.2 Instrumentation and Control Room/DC Equipment Rooms Design Basis

The habitability systems are also designed to service the instrumentation and control rooms and dc equipment rooms. The habitability systems are capable of maintaining the temperature in the instrumentation and control rooms and dc equipment rooms below the equipment qualification temperature limit throughout the duration of the postulated accidents discussed in Chapter 15, an SSE, or design-basis tornado.

6.4.2 System Description

Only the main control room emergency habitability system is discussed in this subsection. The remaining systems are described only as necessary to define their functions in meeting the safety-related design bases of the habitability systems. Descriptions of the nuclear island nonradioactive ventilation system, fire protection system, plant lighting system, and radiation monitoring system are found in Subsections 9.4.1, 9.5.1, 9.5.3, and Section 11.5, respectively.

6.4.2.1 Definition of the Main Control Room Pressure Boundary

The main control room pressure boundary is located on elevation 117′-6″ in the auxiliary building, on the nuclear island. As shown in Figure 6.4-1, the pressure boundary encompasses the main control area, operations work area, operations break room, shift supervisor's office, kitchen, and toilet

facilities. The pressure boundary is represented by the line around the periphery of the boundary in the figure. The stairwell leading down to elevation 100′ and the area within the vestibule are specifically excluded from the boundary.

The areas, equipment, and materials to which the main control room operator requires access during a postulated accident are shown in Figure 6.4-1. This figure is a subset of Figure 1.2-8. Areas adjacent to the main control room are shown in Figures 1.2-25 and 1.2-31. The layout, size, and ergonomics of the operator workstations and wall panel information system depicted in Figure 6.4-1 do not reflect the results of the design process described in Chapter 18. The actual size, shape, ergonomics, and layout of the operator workstations and wall panel information system is an output of the design process in Chapter 18.

6.4.2.2 General Description

The main control room emergency habitability system air storage tanks are sized to deliver the required air flow to the main control room and induce sufficient air flow through the passive filtration line to meet the ventilation and pressurization requirements for 72 hours based on the performance requirements of Subsection 6.4.1.1. Normal system makeup is provided by a connection to the breathable quality air compressor in the compressed and instrument air system (CAS). See Subsection 9.3.1 for a description of the CAS. A connection for refilling operation is provided in the CAS.

Flow from the air storage tanks induces a filtration flow of at least 600 cfm. Testing was conducted to validate that the passive filtration line is capable of inducing a filtration flow of at least 600 cfm greater than the design flow rate from the VES emergency air storage tanks. The testing is documented in TR-SEE-III-09-03 (Reference 12). The filtration flow passes through a series of silencers to maintain acceptable main control room noise levels. The passive filtration portion of the system includes a HEPA filter, a charcoal adsorber, and a downstream postfilter. The filters are configured to satisfy the guidelines of Regulatory Guide 1.52 (Reference 10). The air intake to the passive filtration ductwork is located near the operations work area. The ductwork is routed behind the main control area through the operations break room to reduce the overall noise level in the main control area. The filtered air supply is then distributed to three supply locations that are sufficiently separated from the air intake to avoid short circuiting of the air flow. Two of the supply locations are located inside the main control area. Flow dampers ensure the filtered air is properly distributed throughout the main control room envelope.

The function of providing passive heat sinks for the main control room, instrumentation and control rooms, and dc equipment rooms is part of the main control room emergency habitability system. The heat sinks for each room are designed to limit the temperature rise inside each room during the 72-hour period following a loss of nuclear island nonradioactive ventilation system operation. The heat sinks consist primarily of the thermal mass of the concrete that makes up the ceilings and walls of these rooms.

To enhance the heat-absorbing capability of the ceilings, a metal form is attached to the interior surface of the concrete at selected locations. Metallic plates are attached perpendicular to the form. These plates extend into the room and act as thermal fins to enhance the heat transfer from the room air to the concrete. The specifics of the fin construction for the main control room and I&C room ceilings are described in Subsection 3.8.4.1.2.

The normal operating temperatures in the main control room, instrumentation and control rooms, dc equipment rooms, and adjacent rooms are kept within a specified range by the nuclear island nonradioactive ventilation system in order to maintain a design basis initial heat sink capacity of each room. See Subsection 9.4.1 for a description of the nuclear island nonradioactive ventilation system.

In the unlikely event that power to the nuclear island nonradioactive ventilation system is unavailable for more than 72 hours, MCR habitability is maintained by operating one of the two MCR ancillary fans to supply outside air to the MCR such that the maximum average Wet Bulb Globe Temperature index for the control room is less than 90°F (32.2°C). See Subsection 9.4.1 for a description of this cooling mode of operation. Doors and ducts may be opened to provide a supply pathway and an exhaust pathway. Likewise, outside air is supplied to division B and C instrumentation and control rooms in order to maintain the ambient temperature below the qualification temperature of the equipment.

The main control room emergency habitability system piping and instrumentation diagram is shown in Figure 6.4-2.

6.4.2.3 Component Description

The main control room emergency habitability system compressed air supply contains a set of storage tanks connected to a main and an alternate air delivery line and equipment to provide electrical load de-energization. Components common to both lines include a manual isolation valve and a pressure regulating valve. Single active failure protection is provided by the use of redundant, remotely operated isolation valves, which are located within the MCR pressure boundary. In the event of insufficient or excessive flow in the main delivery line, the main delivery line is isolated and the alternate delivery line is manually actuated. The alternate delivery line contains the same components as the main delivery line with the exception of the remotely operated isolation valves, and thus is capable of supplying compressed air to the MCR pressure boundary at the required air flowrate. The VES piping and penetrations for the MCR envelope are designated as equipment Class C. Additional details on Class C designation are provided in Subsection 3.2.2.5. The classification of VES components is provided in Table 3.2-3, as appropriate.

- Emergency Air Storage Tanks

  There are a total of 32 air storage tanks. The air storage tanks are constructed of forged, seamless pipe, with no welds, and conform to Section VIII and Appendix 22 of the ASME Code. The design pressure of the air storage tanks is 4000 psi. The storage tanks collectively contain a minimum storage capacity of 327,574 scf.

- Pressure Regulating Valve

  Each compressed air supply line contains a pressure regulating valve located downstream of the common header. The pressure at the outlet of the valve is controlled via a two-staged self-contained pressure control operator. A failure of either stage of the pressure regulating valve will not cause the valve to fail completely open. A failure of the second stage of the pressure regulating valve will increase flow from the emergency air storage tanks. There is adequate margin in the emergency air storage tanks such that an operator has time to isolate the line and manually actuate the alternate delivery line.

- Flow Metering Orifice

  The flow rate of air delivered to the main control room pressure boundary is limited by an orifice located downstream of the pressure regulating valve in the eductor and in the eductor bypass line. The orifice is sized to provide the required air flow rate to the main control room pressure boundary.

- Air Delivery Main Isolation Valve

The pressure boundary of the compressed air storage tanks is maintained by normally closed remotely operated isolation valves in the main supply line. These valves are located within MCR pressure boundary downstream of the pressure regulating valve and automatically initiate air flow upon receipt of a signal to open (see Subsection 6.4.3.2).

- Pressure Relief Isolation Valve

  To limit the pressure increase within the main control room, isolation valves are provided, one in each of redundant flowpaths, which open on a time delay after receipt of an emergency habitability system actuation signal. The valves provide a leak tight seal to protect the integrity of the main control room pressure boundary during normal operation, and are normally closed to prevent interference with the operation of the nonradioactive ventilation system.

- Main Air Flowpath Isolation Valve

  The main air flowpath contains a normally open, manually operated valve located within the MCR pressure boundary, downstream of the remotely operated air delivery main isolation valves. The valve is provided as a means of isolating and preserving the air storage tank's contents in the event of a pressure regulating valve malfunction.

- Air Delivery Alternate Isolation Valve

  The alternate air delivery flowpath contains a normally closed, manually operated valve, located within the MCR pressure boundary. The valve is provided as a means of manually activating the alternate air delivery flowpath in the event the main air delivery flowpath is inoperable.

- Pressure Relief Damper

  Pressure relief dampers are located downstream of the butterfly isolation valves, and are set to open on a differential pressure of at least 1/8-inch water gauge with respect to the surrounding areas. The differential pressure between the control room and the surrounding area location is monitored to ensure that a positive pressure is maintained in the control room with respect to its surroundings.

  The pressure relief dampers discharge through the MCR vestibule in order to reduce the amount of radioactivity that can be transported into the MCR when operators enter. Two vestibule discharge openings provide a purge flow path from the vestibule to the corridor.

- Eductor

  An eductor is connected to the discharge of the VES makeup line from the emergency air storage tanks and to ductwork located inside the main control room envelope that comprises the passive filtration portion of the VES. The eductor works by directing compressed air from the VES storage tanks through a specially designed nozzle to create a powerful vacuum that draws air from the main control room through the surrounding ductwork into the passive air filtration line. The eductor is designed to create a vacuum capable of drawing at least 600 scfm of flow into the passive air filtration system. This flow rate is based on a VES makeup flow of 65 ± 5 scfm at an approximate pressure of 50 psig at the discharge of the bottled air supply to the eductor. The eductor has no electrical power requirements, contains no moving parts, and requires no maintenance such as adjusting setpoints or lubricating bearings.

- High-Efficiency Particulate (HEPA) Filter, Charcoal Adsorber, and Postfilter

The main control room passive filtration flowpath contains a HEPA filter in series with a charcoal adsorber and a postfilter. They work to remove particulate and iodine from the air to reduce potential control room dose during VES operation.

HEPA filters are constructed, qualified, and tested in accordance with UL-586 (Reference 9) and ASME AG-1 (Reference 7), Section FC. Each HEPA filter cell is individually shop tested to verify an efficiency of at least 99.97 percent using a monodisperse 0.3-µm aerosol in accordance with ASME AG-1 (Reference 7), Section TA.

The charcoal adsorber is designed, constructed, qualified, and tested in accordance with ASME AG-1 (Reference 7), Section FD; and Regulatory Guide 1.52. Each charcoal adsorber is an assembly with 2-inch deep Type II adsorber cells, conforming to IE Bulletin 80-03 (Reference 8).

Postfilters downstream of the charcoal filters have a minimum DOP efficiency of 95 percent. The filters meet UL 900 (Reference 11) Class I construction criteria.

- Silencers

  Two silencers are located in the passive air filtration line. One silencer is located downstream of the eductor, and the other silencer is located upstream of the eductor. The silencers are designed to reduce the noise created by the passive air filtration line.

- Control Room Access Doors

  Two sets of doors, with a vestibule between, are provided at the access to the main control room.

- Breathing Apparatus

  Self-contained portable breathing equipment with air bottles is stored inside the main control room pressure boundary. The amount of stored air is sufficient to provide a 6-hour supply of breathable air for up to 11 main control room occupants. This is backup protection to the permanently installed habitability systems.

- MCR Load Shed Panels

  The de-energization of the Main Control Room (MCR) electrical loads will be performed using Class 1E equipment. Equipment within each of the two electrical panels will be actuated from the "main control room isolation, air supply initiation and electrical load de-energization" engineered safety feature. The de-energization is separated into two stages to provide operators with the maximum available non-safety equipment, while maintaining the MCR heat load within the requirements of the VES.

  Each electrical panel will have redundant relays and timers controlled by both PMS Division A and PMS Division C. Either division will be capable of actuating the timers and relays associated with each electrical panel independent of one another. This configuration prevents routine maintenance or single failures of a PMS cabinet from creating a spurious loss of MCR electrical loads, while still providing for single failure protection. In order to accomplish the "De-energize MCR Electrical Loads" function, one set of Stage 1 and Stage 2 timers in each electrical panel must receive the PMS command.

  Relays in both electrical panels must be actuated in order to carry out the overall function; however, overall actuation may occur via different combinations of Division A and Division C commands.

6.4.2.4 Leaktightness

The main control room pressure boundary is designed for low leakage. It consists of cast-in-place reinforced concrete walls and slabs, and is constructed to minimize leakage through construction joints and penetrations. The following features are applied as needed in order to achieve this objective:

- The outside surface of penetrations sleeves in contact with concrete are sealed with epoxy crack sealer. The piping and electrical cable penetrations are sealed with qualified pressure-resistant material compatible with penetration materials and/or cable jacketing.
- The interior or exterior surfaces of the main control room envelope (walls, floor, and ceiling) are coated with low permeability paint/epoxy sealant.
- Inside surfaces of penetrations and sleeves in contact with commodities (i.e., pipes and conduits, etc.) are sealed. Main control room pressure boundary HVAC isolation valves are qualified to shut tight against control room pressure.
- Penetration sealing materials are designed to withstand at least 1/4-inch water gauge pressure differential in an air pressure barrier. Penetration sealing material is a silicone-based material or equivalent.
- There is no HVAC duct that penetrates the main control room pressure boundary. The portions of the nuclear island nonradioactive ventilation system (VBS) that penetrate the main control room pressure boundary are safety-related piping that include redundant safety-related seismic Category I isolation valves that are physically located within the main control room envelope.

The piping, conduits, and electrical cable trays penetrating through any combination of main control room pressure boundary are sealed with seal assembly compatible with the materials of penetration commodities. Penetration sealing materials are selected to meet barrier design requirements and are designed to withstand specific area environmental design requirements and remain functional and undamaged during and following an SSE. There are no adverse environmental effects on the MCR sealant materials resulting from postulated spent fuel pool boiling events.

The main control room pressure boundary main entrance is designed with a double-door vestibule, which is purged by the pressure relief damper discharge flow during main control room emergency habitability system operation. The emergency exit door (stairs to elevation 100′) is normally closed, and remains closed under design basis source term conditions. Administrative controls prohibit the emergency exit door to the remote shutdown workstation from being used for normal ingress and egress during VES operation.

When the main control room pressure boundary is isolated in an accident situation, there is no direct communication with the outside atmosphere, nor is there communication with the normal ventilation system. Leakage from the main control room pressure boundary is the result of an internal pressure of at least 1/8-inch water gauge provided by emergency habitability system operation.

The exfiltration and infiltration analysis for nuclear island nonradioactive ventilation system operation is discussed in Subsection 9.4.1.

6.4.2.5 Interaction with Other Zones and Pressurized Equipment

The main control room emergency habitability system is a self-contained system. There is no interaction between other zones and pressurized equipment.

For a discussion of the nuclear island nonradioactive ventilation system, refer to Subsection 9.4.1.

6.4.2.6 Shielding Design

The design basis loss-of-coolant accident (LOCA) dictates the shielding requirements for the main control room. Main control room shielding design bases are discussed in Section 12.3. In addition to shielding provided by building structural features, consideration is given to shielding provided by the VES filter shielding. Descriptions of the design basis LOCA source terms, main control room shielding parameters, and evaluation of doses to main control room personnel are presented in Section 15.6.

The main control room and its location in the plant are shown in Figure 12.3-1.

6.4.3 System Operation

This subsection discusses the operation of the main control room emergency habitability system.

Generic Issue 83 addresses the importance of maintaining control room habitability following an accidental release of external toxic or radioactive material or smoke and the capability of the control room operators to safely control the reactor. Procedures and training for control room habitability are written in accordance with Section 13.5 for control room operating procedures, and Section 13.2 for operator training. The procedures and training are verified to be consistent to the intent of Generic Issue 83.

The procedures and training address the toxic chemical events addressed in Sections 2.2 and 6.4 consistent with the guidance provided in regulatory position C.5 of Regulatory Guide 1.78, including arrangements with Federal, State, and local agencies or other cognizant organizations for the prompt notification of the nuclear power plant when accidents involving hazardous chemicals occur within five miles of the plant. The procedures include the conduct of periodic surveys of stationary and mobile sources of hazardous chemicals affecting the evaluations consistent with the guidance provided in regulatory position 2.5 of Regulatory Guide 1.196. The procedures include appropriate reviews of the configuration of the control room envelope and habitability systems consistent with the guidance provided in regulatory position 2.2.1 of Regulatory Guide 1.196. The procedures also include periodic assessments of the control room habitability systems' material condition, configuration controls, safety analyses, and operating and maintenance procedures consistent with the guidance provided in regulatory position 2.2.1 of Regulatory Guide 1.196.

Procedures for testing and maintenance are consistent with the design requirements of the DCD including the guidance provided in regulatory position 2.7.1 of Regulatory Guide 1.196.

6.4.3.1 Normal Mode

The main control room emergency habitability system is not required to operate during normal conditions. The nuclear island nonradioactive ventilation system maintains the air temperature of a number of rooms within a predetermined temperature range. The rooms with this requirement include the rooms with a main control room emergency habitability system passive heat sink design and their adjacent rooms.

6.4.3.2 Emergency Mode

Operation of the main control room emergency habitability system is automatically initiated by either of the following conditions:

- "High-2" particulate or iodine radioactivity in the main control room supply air duct.

- Loss of ac power for more than 10 minutes

Operation can also be initiated by manual actuation.

The nuclear island nonradioactive ventilation system is isolated from the main control room pressure boundary by automatic closure of the isolation devices located in the nuclear island nonradioactive ventilation system ductwork if radiation levels in the main control room supply air duct exceed the "High-2" setpoint or if ac power is lost for more than 10 minutes. At the same time, the main control room emergency habitability system begins to deliver air from the emergency air storage tanks to the main control room by automatically opening the isolation valves located in the supply line. The relief damper isolation valves also open allowing the pressure relief dampers to function and discharge the damper flow to purge the vestibule.

After the main control room emergency habitability system isolation valves are opened, the air supply pressure is regulated by a self-contained regulating valve. This valve maintains a constant downstream pressure regardless of the upstream pressure. A constant air flow rate is maintained by the flow metering orifice downstream of the pressure regulating valve. This flow rate is sufficient to maintain the main control room pressure boundary at least 1/8-inch water gauge positive differential pressure with respect to the surroundings and induce a flow rate of at least 600 cfm into the passive air filtration line. The main control room emergency habitability system air flow rate is also sufficient to maintain the carbon dioxide levels below 0.5 percent concentration for 11 occupants and to maintain air quality within the guidelines of Table 1 and Appendix C, Table C-1, of Reference 1.

The emergency air storage tanks are sized to provide the required air flow to the main control room pressure boundary for 72 hours. After 72 hours, the main control room is cooled by drawing in outside air and circulating it through the room, as discussed in Subsection 6.4.2.2.

The temperature and humidity in the main control room pressure boundary following a loss of the nuclear island nonradioactive ventilation system remain within limits for reliable human performance (Reference 201) over a 72-hour period. The bounding initial values of temperature/relative humidity in the MCR are 75°F/60 percent. The temperature/relative humidity values calculated during the 72 hours following a design basis accident equate to a maximum average Wet Bulb Globe Temperature index for the control room of less than 90°F (32.2°C). The 90°F (32.2°C) Wet Bulb Globe Temperature index is the design limit for minimizing performance decrements and potential harm, and preserving well-being and effectiveness of the control room staff for an unlimited duration (Reference 201). Non-1E MCR heat loads are de-energized by PMS automatic actions and the 24 hour battery heat loads are terminated or exhausted at 24 hours to maintain the assumed heat load values in Table 6.4-3, which then maintains the occupied zone of the MCR and the zones containing qualified safety-related equipment within the temperature constraints at 72-hours post VES actuation. The occupied zone is considered to be the area between the raised floor and 7 ft. above the floor, which encompasses the reactor operator and senior reactor operator consoles.

Sufficient thermal mass is provided in the walls and ceiling of the main control room to absorb the heat generated by the equipment, lights, and occupants. The temperature in the instrumentation and control rooms and dc equipment rooms following a loss of the nuclear island nonradioactive ventilation system remains below acceptable limits as discussed in Subsection 6.4.4. As in the main control room, sufficient thermal mass is provided surrounding these rooms to absorb the heat generated by the equipment. After 72 hours, the instrumentation and control rooms will be cooled by drawing in outside air and circulating it through the room, as discussed in Subsection 6.4.2.2.

In the event of a loss of ac power, the nuclear island nonradioactive ventilation system isolation valves automatically close and the main control room emergency habitability system isolation valves automatically open. These actions protect the main control room occupants from a potential radiation release. In instances in which there is no radiological source term present, the compressed air

storage tanks are refilled via a connection to the breathable quality air compressor in the compressed and instrument air system (CAS). The compressed air storage tanks can also be refilled from portable supplies by an installed connection in the CAS.

6.4.4 System Safety Evaluation

In the event of an accident involving the release of radioactivity to the environment, the nuclear island nonradioactive ventilation system (VBS) is expected to switch from the normal operating mode to the supplemental air filtration mode to protect the main control room personnel. Although the VBS is not a safety-related system, it is expected to be available to provide the necessary protection for realistic events. However, the design basis accident doses reported in Chapter 15 utilize conservative assumptions, and the main control room doses are calculated based on operation of the safety-related emergency habitability system (VES) since this is the system that is relied upon to limit the amount of activity the personnel are exposed to. The analyses assume that the VBS is initially in operation, but fails to enter the supplemental air filtration mode on a High-1 radioactivity indication in the main control room atmosphere. VES operation is then assumed to be initiated once the High-2 level for control room atmosphere activity is reached.

Doses are also calculated assuming that the VBS does operate in the supplemental air filtration mode as designed, but with no switchover to VES operation. This VBS operating case demonstrates the defense-in-depth that is provided by the system and also shows that, in the event of an accident with realistic assumptions, the VBS is adequate to protect the control room operators without depending on VES operation.

Doses were determined for the following design basis:

	VES Operating	VBS Operating
Large Break LOCA	4.33 rem TEDE	4.84 rem TEDE
Fuel Handling Accident	1.5 rem TEDE	1.6 rem TEDE
Steam Generator Tube Rupture		
(Pre-existing iodine spike)	3.4 rem TEDE	4.0 rem TEDE
(Accident-initiated iodine spike)	1.0 rem TEDE	1.4 rem TEDE
Steam Line Break		
(Pre-existing iodine spike)	1.1 rem TEDE	0.9 rem TEDE
(Accident-initiated iodine spike)	1.3 rem TEDE	2.9 rem TEDE
Rod Ejection Accident	3.6 rem TEDE	2.5 rem TEDE
Locked Rotor Accident		
(Accident without feedwater available)	0.4 rem TEDE	0.7 rem TEDE
(Accident with feedwater available)	0.2 rem TEDE	0.9 rem TEDE
Small Line Break Outside Containment	0.4 rem TEDE	0.4 rem TEDE

For all events the doses are within the dose acceptance limit of 5.0 rem TEDE. The details of analysis assumptions for modeling the doses to the main control room personnel are delineated in

the LOCA dose analysis discussion in Subsection 15.6.5.3 for VES operating cases. The analysis assumptions are provided in Subsection 9.4.1.2.3.1 for the VBS operating case.

No radioactive materials are stored or transported near the main control room pressure boundary.

As discussed and evaluated in Subsection 9.5.1, the use of noncombustible construction and heat and flame resistant materials throughout the plant reduces the likelihood of fire and consequential impact on the main control room atmosphere. Operation of the nuclear island nonradioactive ventilation system in the event of a fire is discussed in Subsection 9.4.1.

The exhaust stacks of the onsite standby power diesel generators are located in excess of 150 feet away from the fresh air intakes of the main control room. The onsite standby power system fuel oil storage tanks are located in excess of 300 feet from the main control room fresh air intakes. These separation distances reduce the possibility that combustion fumes or smoke from an oil fire would be drawn into the main control room.

The protection of the operators in the main control room from offsite toxic gas releases is discussed in Section 2.2. The sources of onsite chemicals are described in Table 6.4-1, and their locations are shown on Figure 1.2-2. Analysis of these sources is in accordance with Regulatory Guide 1.78 (Reference 5) and the methodology in NUREG-0570, “Toxic Vapor Concentrations in the Control Room Following a Postulated Accidental Release” (Reference 6), and the analysis shows that these sources do not represent a toxic or flammability hazard to control room personnel.

Table 6.4-201 provides additional details regarding the evaluated onsite chemicals.

A supply of protective clothing, respirators, and self-contained breathing apparatus adequate for 11 persons is stored within the main control room pressure boundary.

The main control room emergency habitability system components discussed in Subsection 6.4.2.3 are arranged as shown in Figure 6.4-2. The location of components and piping within the main control room pressure boundary provides the required supply of compressed air to the main control room pressure boundary, as shown in Figure 6.4-1.

During emergency operation, the main control room emergency habitability system passive heat sinks are designed to limit the temperature inside the main control room to remain within limits for reliable human performance (Reference 201) over 72 hours. The passive heat sinks limit the air temperature inside the instrumentation and control rooms to 120°F and dc equipment rooms to 120°F. The walls and ceilings that act as the passive heat sinks contain sufficient thermal mass to accommodate the heat sources from equipment, personnel, and lighting for 72 hours.

The main control room emergency habitability system nominally provides 65 scfm of ventilation air to the main control room from the compressed air storage tanks. Sixty scfm of supplied ventilation flow is sufficient to induce a filtration flow of at least 600 cfm into the passive air filtration line located inside the main control room envelope. This ventilation flow is also sufficient to pressurize the control room to at least positive 1/8-inch water gauge differential pressure with respect to the surrounding areas in addition to limiting the carbon dioxide concentration below one-half percent by volume for a maximum occupancy of 11 persons and maintaining air quality within the guidelines of Table 1 and Appendix C, Table C-1, of Reference 1.

Automatic transfer of habitability system functions from the main control room/control support area HVAC subsystem of the nuclear island nonradioactive ventilation system to the main control room emergency habitability system is initiated by either the following conditions:

- “High-2” particulate or iodine radioactivity in MCR air supply duct

- Loss of ac power for more than 10 minutes

The airborne fission product source term in the reactor containment following the postulated LOCA is assumed to leak from the containment and airborne fission products are assumed to result from spent fuel pool steaming. The concentration of radioactivity, which is assumed to surround the main control room, after the postulated accident, is evaluated as a function of the fission product decay constants, the containment leak rate, and the meteorological conditions assumed. The assessment of the amount of radioactivity within the main control room takes into consideration the radiological decay of fission products and the infiltration/exfiltration rates to and from the main control room pressure boundary.

A single active failure of a component of the main control room emergency habitability system or nuclear island nonradioactive ventilation system does not impair the capability of the systems to accomplish their intended functions. The Class 1E components of the main control room emergency habitability system are connected to independent Class 1E power supplies. Both the main control room emergency habitability system and the portions of the nuclear island nonradioactive ventilation system which isolates the main control room are designed to remain functional during an SSE or design-basis tornado.

In accordance with SECY-77-439 (Reference 13), a single passive failure of a component in the passive filtration line in the main control room emergency habitability system does not impair the capability of the system to accomplish its intended function. There is no source that could create line blockage in the VES line from the air bottles to the eductor. Thus potential blockage in the filtration line does not preclude breathable air from the emergency air storage tanks from being delivered to the main control room envelope for 72 hours during VES operation. Passive filtration using the main control room habitability system is not required to maintain operator dose rates below the acceptance limit of 5.0 rem TEDE 24 hours after the initiation of a design basis event. The dose rates for the following limiting cases were determined to demonstrate that passive filtration is not required 24 hours after the initiation of a design basis event. The following cases are evaluated since they involve releases that extend beyond 24 hours after the initiation of the event:

Large Break LOCA	4.4 rem TEDE
Steam Line Break	
(Pre-existing iodine spike)	1.2 rem TEDE
(Accident-initiated iodine spike)	2.0 rem TEDE

For all events, the doses are within the dose acceptance limit of 5.0 rem TEDE. The details of analysis assumptions for modeling the doses to the main control room personnel are the same as those delineated in the LOCA dose analysis discussion in Subsection 15.6.5.3 assuming a passive failure disables the passive filtration flow path after 24 hours. Potential blockage in the filtration line does not preclude breathable air from the emergency air storage tanks from being delivered to the main control room envelope for 72 hours during VES operation. An eductor bypass line with a flow control orifice provides the operators with the ability to ensure that the breathable air from the emergency air storage tanks is delivered to the MCR.

6.4.4.1 Dual Unit Analysis

Credible events that could put the control room operators at risk from a dose standpoint at a single AP1000 unit have been evaluated and addressed in the DCD. The dose to the control room operators at an adjacent AP1000 unit due to a radiological release from another unit is bounded by the dose to control room operators on the affected unit. While it is possible that a unit may be downwind in an unfavorable location, the dose at the downwind unit would be bounded by what has

already been evaluated for a single unit AP1000. Simultaneous accidents at multiple units at a common site are not considered to be a credible event.

The radiological dose(s) at Units 6 & 7 due to a Design Basis Accident (DBA) from Units 3 & 4 is discussed in Subsection 2.2.3.1.6.1.

6.4.4.2 Toxic Chemical Habitability Analysis

Regulatory Guide 1.78 establishes the Occupational Safety and Health Administration (OSHA) National Institute for Occupational Safety and Health (NIOSH) Immediately Dangerous to Life and Health (IDLH) guidelines for 30-minute exposure as the required screening criteria for airborne hazardous chemicals. Per Regulatory Guide 1.78, the NIOSH IDLH values were used to screen chemicals and to evaluate concentrations of hazardous chemicals requiring further evaluation to determine their effect on control room habitability.

Regulatory Guide 1.78 requires evaluation of control room habitability following a postulated external release of hazardous chemicals from mobile or stationary sources, onsite or offsite and indicates that the atmospheric transport of a released hazardous chemical should be calculated using a dispersion or diffusion model that permits temporal as well as spatial variations in release terms and concentrations. As described in Subsection 2.2.3, the ALOHA® air dispersion model was used to evaluate the potential toxicity hazards from internal events associated with Units 1 through 5 and site-specific onsite chemical storage facilities associated with Units 6 & 7 along with external events. The ALOHA air dispersion model provides the required evaluation consistent with the requirements presented in RG 1.78 to predict the concentrations of toxic or asphyxiating chemical clouds as they disperse downwind for all facilities and sources.

For the indicated toxicity analyses in Subsection 2.2.3, the maximum distance a cloud can travel before it disperses enough to fall below the IDLH or other determined toxicity limit concentration in the vapor cloud was determined using ALOHA. The IDLH is defined by NIOSH as a situation that poses a threat of exposure to airborne contaminants when that exposure is likely to cause death or immediate or delayed permanent adverse health effects, or prevent escape from such an environment. The IDLHs determined by NIOSH are established such that workers are able to escape such environments without suffering permanent health damage. As indicated in RG 1.78, the use of IDLH values as toxicity limits is appropriate since it provides an adequate margin of safety as long as control room operators use protective measures. Where an IDLH was unavailable for a toxic chemical, the time-weighted average or threshold limit value, promulgated by the OSHA or adopted by the American Conference of Governmental Hygienists, was used as the toxicity concentration level. As required in RG 1.78, asphyxiating chemicals were evaluated to determine if their release resulted in the displacement of a significant fraction of the control room air—defined by the OSHA definition of an oxygen-deficient atmosphere.

The effects of toxic chemical releases from internal sources associated with Units 1 through 5 and site-specific onsite chemical storage facilities associated with Units 6 & 7 along with external sources are described and summarized in Subsection 2.2.3 relative to the release sources. A site-specific analysis is included for those chemicals stored at Units 6 & 7 which were either not included in the standard AP1000 toxicity analysis (Table 6.4-201) or where the standard AP1000 toxicity analysis was not bounding for the identified chemical.

Subsection 2.2.3 determined that there are no design basis events due to site-specific sources of hazardous materials in the vicinity of the plant that require mitigating actions to be undertaken to eliminate or lessen the likelihood and severity of potential accidents relating to toxic chemicals.

Table 6.4-201 provides specific information concerning the toxicity analyses associated with the standard AP1000 chemicals for Units 6 & 7.

6.4.5 Inservice Inspection/Inservice Testing

A program of preoperational and inservice testing requirements is implemented to confirm initial and continued system capability. The VES system is tested and inspected at appropriate intervals, as defined by the technical specifications. Emphasis is placed on tests and inspections of the safety-related portions of the habitability systems.

6.4.5.1 Preoperational Inspection and Testing

Preoperational testing of the main control room emergency habitability system is performed to verify that the air flow rate of 65 ± 5 scfm is sufficient to induce a flow rate of at least 600 cfm into the passive air filtration line and maintain pressurization of the main control room envelope of at least 1/8-inch water gauge with respect to the adjacent areas. The positive pressure within the main control room is confirmed via the differential pressure transmitters within the control room. The installed flow meters are utilized to verify the system flow rates. The preoperational testing also verifies that the VES pressure regulating valves are capable of maintaining the VES flow rate of 65 ± 5 scfm over the operating range of expected valve inlet pressures. The pressurization of the control room limits the ingress of radioactivity, and the recirculation through the passive air filtration line maintains operator dose limits below regulatory limits. Air quality within the MCR environment is confirmed to be within the guidelines of Table 1 and Appendix C, Table C-1, of Reference 1 by analyzing air samples taken during the pressurization test.

The storage capacity of the compressed air storage tanks is verified to be in excess of 327,574 scf of compressed air. This amount of compressed air will assure 72 hours of air supply to the main control room.

Temperatures within the MCR where the operators are located are verified by analysis and/or testing to remain within limits for reliable human performance (Reference 201) for a 72-hour period following a bounding scenario with MCR isolation and non-safety ac power available (see Table 6.4-3) and a station blackout (battery backed loads only).

Preoperational testing of the main control room isolation valves in the nuclear island nonradioactive ventilation system is performed to verify the leaktightness of the valves.

Preoperational testing for main control room envelope habitability during VES operation will be conducted in accordance with ASTM E741 (Reference 4). Where possible, inleakage testing is performed in conjunction with the VES system level operability testing since the VES must be in operation to perform the inleakage testing. See Note 7 of Table 3.9-17 for additional information on the VES system level operability test.

Testing and inspection of the radiation monitors is discussed in Section 11.5. The other tests noted above are discussed in Chapter 14.

6.4.5.2 Inservice Testing

Inservice testing of the main control room emergency habitability system and nuclear island nonradioactive ventilation system is conducted in accordance with the surveillance requirements specified in the technical specifications in Chapter 16.

ASTM E741 testing of the main control room pressure boundary is conducted in accordance with the frequency specified in the technical specifications.

6.4.5.3 Air Quality Testing

Connections are provided for sampling the air supplied from the compressed and instrument air system and for periodic sampling of the air stored in the storage tanks. Air samples of the compressed air storage tanks are taken quarterly and analyzed for acceptable air quality within the guidelines of Table 1 and Appendix C, Table C-1, of Reference 1 with a pressure dew point of 40°F or lower at 3400 psig or greater.

6.4.5.4 Main Control Room Envelope Habitability

Testing for main control room envelope habitability during VES operation will be conducted in accordance with ASTM E741 (Reference 4).

The main control room envelope must undergo an analysis of inleakage into the control room envelope to determine the integrity of the control room envelope boundary during a design basis accident, hazardous chemical release, or smoke event. Baseline control room envelope habitability testing will be performed as discussed in Subsection 6.4.5.1, followed by a self-assessment at three (3) years after successful baseline testing, and a periodic test at six (6) years in conjunction with other ASME inservice testing requirements. The self-assessment of the ability to maintain main control room habitability includes a review of procedures, boundaries, design changes, maintenance activities, safety analyses, and other related determinations.

If periodic testing is successful, then the assessment/testing cycle continues with a self-assessment three (3) years later and periodic testing three (3) years after the self-assessment. If a periodic testing is unsuccessful, then a periodic test is required three (3) years after repair and successful re-testing, following the unsuccessful periodic testing, to ensure there is no accelerated degradation of the main control room boundary or discrepancies in control of the main control room habitability.

In addition to periodic tests, control room envelope testing will also be performed when changes are made to structures, systems, and components that could impact control room envelope integrity, including systems internal and external to the control room envelope. The tests must be commensurate with the types and degrees of modifications and repairs and the potential impact upon integrity. Additional control room envelope testing will also be performed if a new limiting condition or alignment arises for which no inleakage data is available. Test failure is considered to be inleakage in excess of the licensing basis value for the particular challenge to control room envelope integrity.

Where possible, inleakage testing is performed in conjunction with the VES system level operability testing since the VES must be in operation to perform the inleakage testing. See Note 7 of Table 3.9-17 for additional information on the VES system level operability test.

6.4.6 Instrumentation Requirements

The indications in the main control room used to monitor the main control room emergency habitability system and nuclear island nonradioactive ventilation system are listed in Table 6.4-2.

Instrumentation required for actuation of the main control room emergency habitability system and nuclear island nonradioactive ventilation system are discussed in Subsection 7.3.1.

Details of the radiation monitors used to provide the main control room indication of actuation of the nuclear island nonradioactive ventilation system supplemental filtration mode of operation and actuation of main control room emergency habitability system operation are given in Section 11.5.

A description of initiating circuits, logic, periodic testing requirements, and redundancy of instrumentation relating to the habitability systems is provided in Section 7.3.

6.4.7 Combined License Information

The amount and location of possible sources of hazardous chemicals in or near the plant and for seismic Category I Class 1E hazardous chemical monitoring, are addressed in Subsection 6.4.4.2. Regulatory Guide 1.78 (Reference 5) addresses control room protection for hazardous chemicals and evaluation of offsite hazardous chemical releases (including the potential for hazardous chemical releases beyond 72 hours) in order to meet the requirements of TMI Action Plan Item III.D.3.4 and GDC 19.

Procedures and training for control room envelope habitability consistency with the intent of Generic Issue 83 (see Section 1.9) are addressed in Subsection 6.4.3.

The testing frequency for the main control room envelope habitability is discussed in Subsection 6.4.5.4.

6.4.8 References

1. "Ventilation for Acceptable Indoor Air Quality," ASHRAE Standard 62 - 1989.

2. "Human Engineering Design Guidelines," MIL-HDBK-759C, 31 July 1995.

3. "Human Engineering," MIL-STD-1472E, 31 October 1996.

4. "Standard Test Methods for Determining Air Change in a Single Zone by Means of a Tracer Gas Dilution," ASTM E741, 2000.

5. "Evaluating the Habitability of a Nuclear Power Plant Control Room During a Postulated Hazardous Chemical Release," Regulatory Guide 1.78, Revision 1, December 2001.

6. NUREG-0570, "Toxic Vapor Concentrations in the Control Room Following a Postulated Accidental Release," June 1979.

7. "Code on Nuclear Air and Gas Treatment," ASME/ANSI AG-1-1997.

8. "Loss of Charcoal Adsorber Cells," IE Bulletin 80-03, 1980.

9. "High-Efficiency, Particular, Air-Filter Units," UL-586, 1996.

10. "Design, Testing, and Maintenance Criteria for Post Accident Engineered-Safety-Feature Atmosphere Cleanup System Air Filtration and Adsorption Units of Light-Water-Cooled Nuclear Power Plants," Regulatory Guide 1.52, Revision 3, 2001.

11. "Test Performance of Air-Filter Units," UL-900, 1994.

12. "AP1000 VES Air Filtration System Test Report," TR-SEE-III-09-03.

13. "Single Failure Criterion," SECY-77-439.

201. NUREG-0700, Revision 2, "Human-System Interface Design Review Guidelines," 2002.

Table 6.4-1
Onsite Chemicals

Material	State	Location
Hydrogen	Liquid/Gas	Gas storage/Yard at Turbine Building
Nitrogen	Liquid	Gas storage
CO_2	Liquid	Gas storage
Oxygen Scavenger	Liquid	Turbine building
pH Addition	Liquid	Turbine building, CWS area[(a)]
Sulfuric Acid	Liquid	Turbine building, CWS area[(a)]
Sodium Hydroxide	Liquid	Turbine building, CWS area[(a)]
Dispersant[(a)]	Liquid	Turbine building, CWS area[(a)]
Fuel Oil	Liquid	DG fuel oil storage tank/DG building/Annex building
Corrosion Inhibitor	Liquid	Turbine building, CWS area[(a)]
Scale Inhibitor	Liquid	Turbine building, CWS area[(a)]
Biocide/Disinfectant	Liquid	Turbine building, CWS area[(a)]
Algaecide	Liquid	Turbine building, CWS area[(a)]

Note:
a. Site-specific

Table 6.4-2
Main Control Room Habitability Indications and Alarms

VES emergency air storage tank pressure (indication and low and low-low alarms)
VES MCR pressure boundary differential pressure (indication and high and low alarms)
VES air delivery line flowrate (indication and high and low alarms)
VES passive filtration flow rate (indication and high and low alarms)
VBS main control room supply air radiation level (High-1 and-High-2 alarms)
VBS outside air intake smoke level (high alarm)
VBS isolation valve position
VBS MCR pressure boundary differential pressure

Table 6.4-3
Loss of AC Power Heat Load Limits

Room Name	Room Numbers	Heat Load 0 to 24 Hours (Btu/sec)	Heat Load 24 to 72 Hours (Btu/sec)
MCR Envelope	12401	26.1 (Hour 0 through 0.5) 15.6 (Hour 0.5 through 3.5) 5.8 (Hour 3.5 through 24)	2.9
I&C Rooms	12301, 12305	8.8	0
I&C Rooms	12302, 12304	13.0	4.2
dc Equipment Rooms	12201, 12205	3.7 (Hour 0 through 1) 2.4 (Hour 2 through 24)	0
dc Equipment Rooms	12203, 12207	5.8 (Hour 0 through 1) 4.5 (Hour 2 through 24)	2.0

Table 6.4-201 (Sheet 1 of 2)
Main Control Room Habitability Evaluations of Onsite Toxic Chemicals(1)

Standard Onsite Toxic Chemicals

Evaluated Material	Evaluated State	Evaluated Maximum Quantity	Evaluated Minimum Distance to MCR Intake	Evaluated Location	MCR Habitability Impact Evaluation
Hydrogen	Gas	500 scf	126.3 ft	Yard at turbine building	MCR
Hydrogen	Liquid	1500 gal	577 ft	Gas storage	MCR
Nitrogen	Liquid	3000 gal	577 ft	Gas storage	MCR
Carbon Dioxide (CO_2)	Liquid	6 tons	577 ft	Gas storage	MCR
Oxygen Scavenger [Hydrazine]	Liquid	1600 gal	203 ft	Turbine building	IH
pH Addition [Morpholine]	Liquid	1600 gal	203 ft	Turbine building	IH
Sulfuric Acid	Liquid	800 gal	203 ft	Turbine building	IH
Sulfuric Acid	Liquid	20,000 gal	436 ft	CWS area	IH
Sodium Hydroxide	Liquid	800 gal	203 ft	Turbine building	S
Sodium Hydroxide	Liquid	20,000 gal	436 ft	CWS area	S
Fuel Oil	Liquid	60,000 gal	197 ft	DG fuel oil storage tank, DG building, Annex building	IH

Table 6.4-201 (Sheet 2 of 2)
Main Control Room Habitability Evaluations of Onsite Toxic Chemicals(1)

Standard Onsite Toxic Chemicals

Evaluated Material	Evaluated State	Evaluated Maximum Quantity	Evaluated Minimum Distance to MCR Intake	Evaluated Location	MCR Habitability Impact Evaluation
Corrosion Inhibitor [Sodium Molybdate]	Liquid	800 gal	203 ft	Turbine building	S
Corrosion Inhibitor [Sodium Molybdate]	Liquid	10,000 gal	436 ft	CWS area	S
Scale Inhibitor [Sodium Hexametaphosphate]	Liquid	800 gal	203 ft	Turbine building	S
Scale Inhibitor [Sodium Hexametaphosphate]	Liquid	10,000 gal	436 ft	CWS area	S
Biocide/Disinfectant [Sodium hypochlorite]	Liquid	800 gal	203 ft	Turbine building	S
Biocide/Disinfectant [Sodium hypochlorite]	Liquid	10,000 gal	436 ft	CWS area	S
Algaecide [Ammonium comp. polyethoxylate]	Liquid	800 gal	203 ft	Turbine building	S
Algaecide [Ammonium comp. polyethoxylate]	Liquid	10,000 gal	436 ft	CWS area	S

1) This table supplements Table 6.4-1. Quantities are by largest evaluated container content for the evaluated location per unit. Quantities and distances are bounding evaluation values and may not be actual amounts and distances. Smaller quantities of a chemical at further distances from the MCR air intake are not shown on this table. Actual site locations are confirmed to be at or beyond the evaluated distance.

S - Chemicals with an Impact Evaluation designation of “S” for the MCR Habitability Impact Evaluation were evaluated and screened out based on the chemical properties, distance, and quantities.

IH - Chemicals with an Impact Evaluation designation of “IH” indicates the evaluation of this chemical considered the design detail of the main control room intake height.

MCR - Chemicals with an Impact Evaluation designation of “MCR” indicates the evaluation of this chemical considered design details of the main control room such as volume, envelope boundaries, ventilation systems, and occupancy factor.

Security-Related Information, Withheld Under 10 CFR 2.390d

Figure 6.4-1
Main Control Room Envelope

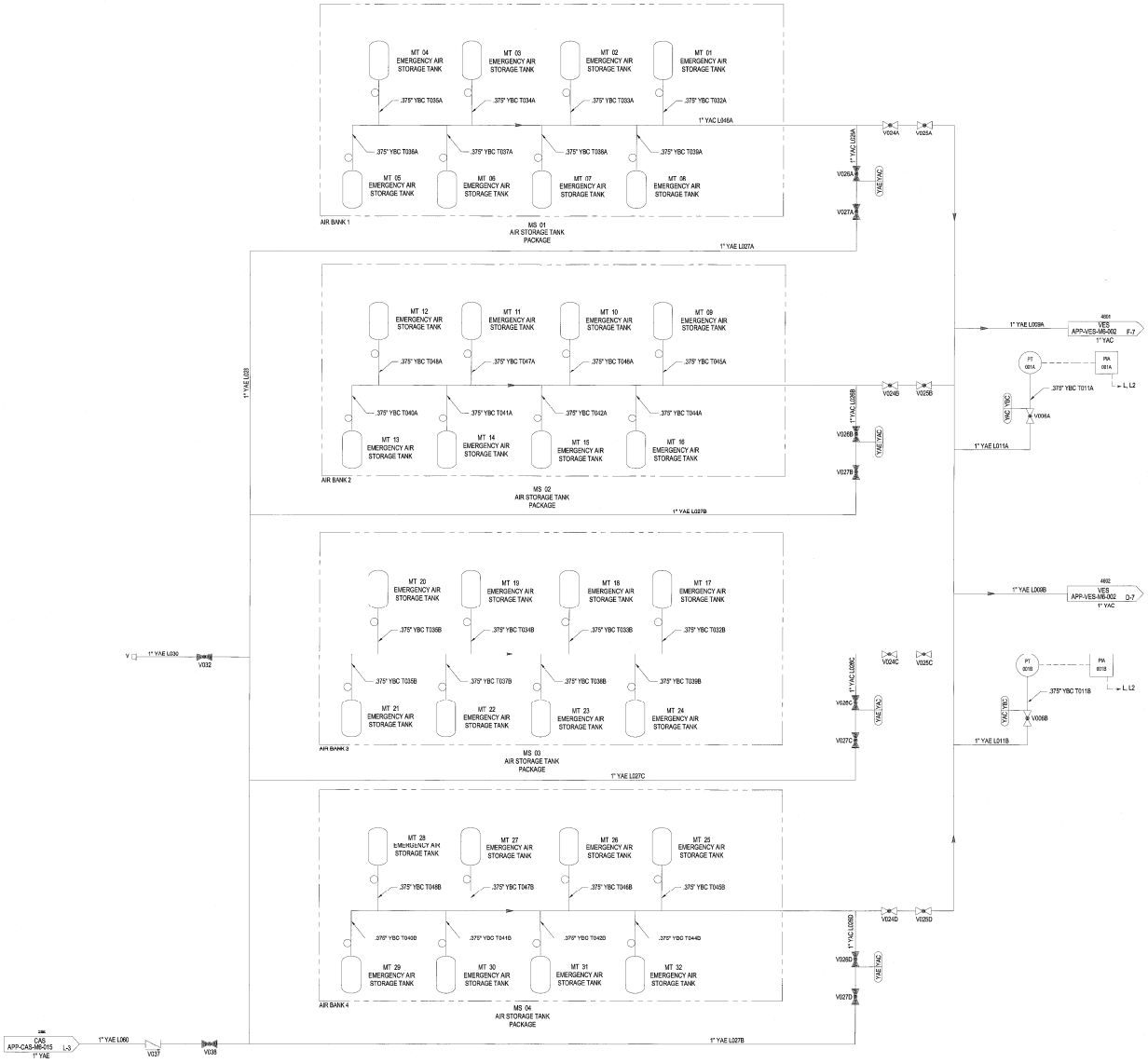

Figure 6.4-2 (Sheet 1 of 2)
Main Control Room Habitability System
Piping and Instrumentation Diagram

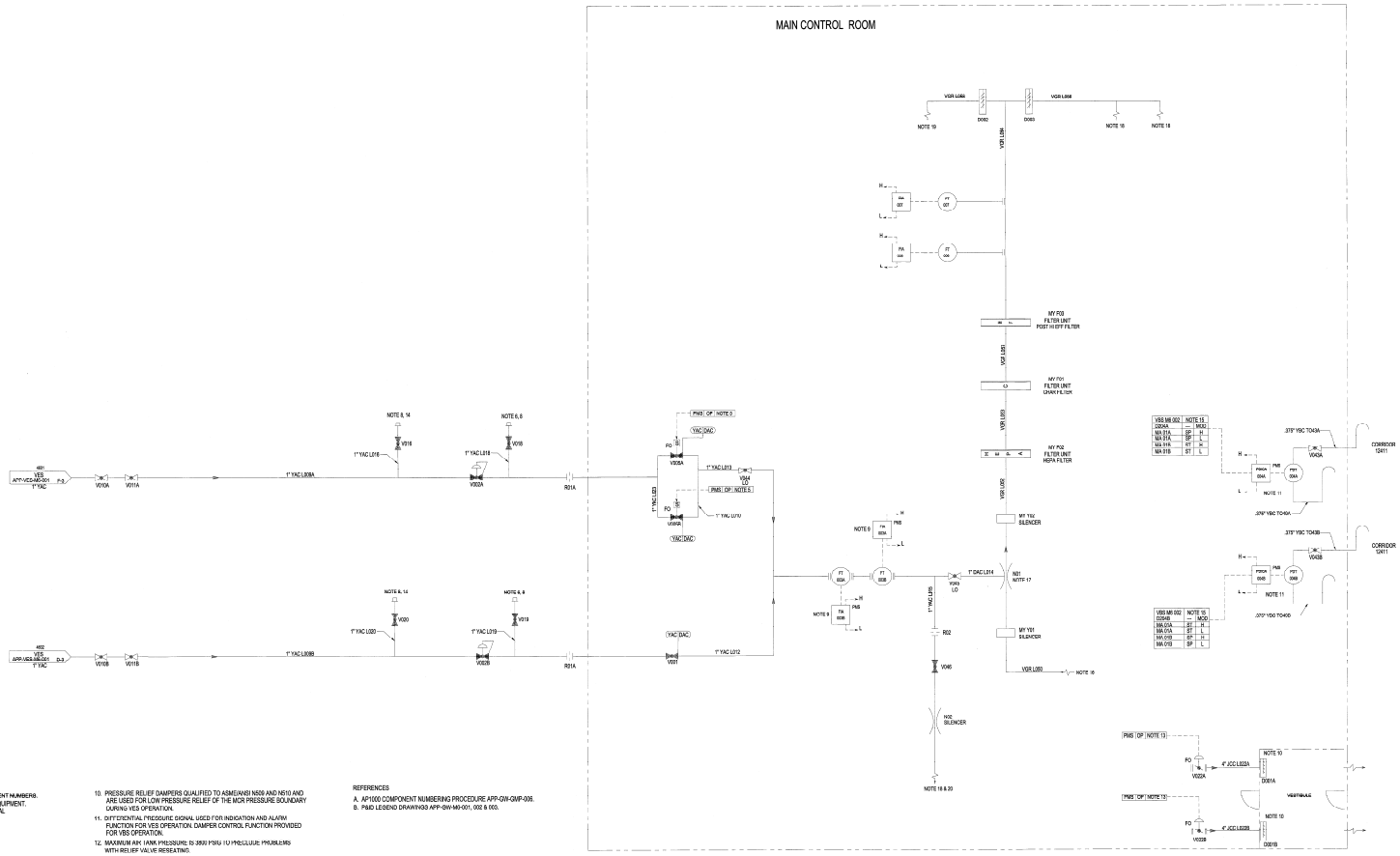

NOTES:

1. THE SYSTEM LOCATOR CODE "APP-VES" HAS BEEN OMITTED FROM ALL COMPONENT NUMBERS. THE COMPONENT CODE HAS BEEN OMITTED FROM ALL COMPONENTS EXCEPT EQUIPMENT. REFER TO THE P&ID LEGEND DRAWING APP-GW-M6-001, 002 & 003 FOR ADDITIONAL INFORMATION REGARDING COMPONENT NUMBERING.
2. REFER TO SYSTEM DESCRIPTIONS FOR A DETAILED DESCRIPTION OF ALL INSTRUMENTATION AND CONTROLS.
3. SYSTEM IS FILLED AND REFILLED USING BREATHABLE QUALITY AIR SOURCE.
4. REFER TO DRAWING APP-VBS-M6-002 FOR NORMAL HVAC SYSTEM.
5. REFER TO APP-PMS-J1-113 FOR DESCRIPTION OF LOGIC.
6. TEMPORARY PRESSURE INSTRUMENT CONNECTION TO PERMIT ADJUSTMENT OF PRESSURE REGULATOR VALVES.
7. DELETED.
8. TUBING PLUG CLOSURES ARE NOW FITTED WITH AN INTERGRAL BLEED MECHANISM TO RELIEVE LINE PRESSURE.
9. LOW FLOW ALARM TO BE ACTIVATED ON TIME DELAY AFTER VES ACTUATION.
10. PRESSURE RELIEF DAMPERS QUALIFIED TO ASME/ANSI N509 AND N510 AND ARE USED FOR LOW PRESSURE RELIEF OF THE MCR PRESSURE BOUNDARY DURING VES OPERATION.
11. DIFFERENTIAL PRESSURE SIGNAL USED FOR INDICATION AND ALARM FUNCTION FOR VES OPERATION. DAMPER CONTROL FUNCTION PROVIDED FOR VBS OPERATION.
12. MAXIMUM AIR TANK PRESSURE IS 3600 PSIG TO PREVENT PROBLEMS WITH RELIEF VALVE RESEATING.
13. PRESSURE RELIEF ISOLATION VALVE TO BE ACTUATED ON TIME DELAY AFTER VES ACTUATION SIGNAL.
14. TEMPORARY PRESSURE INSTRUMENT CONNECTION.
15. VBS DAMPER POSITION PROVIDED VIA IR S.
16. THE AIR INTAKE SHOULD BE LOCATED ABOVE THE INNER VESTIBULE DOOR. A 12X4 EGG CRATE GRILL MINIMUM IS REQUIRED.
17. N01 IS AN EDUCTOR / AIR AMPLIFIER.
18. DISCHARGES INTO MAIN CONTROL AREA.
19. DISCHARGES INTO SHIFT MANAGER'S OFFICE.
20. THE DISCHARGE OF THIS PIPING WILL CONTAIN A LINE SILENCER / MUFFLER (N02).

REFERENCES

A. AP1000 COMPONENT NUMBERING PROCEDURE APP-GW-GMP-006.
B. P&ID LEGEND DRAWINGS APP-GW-M0-001, 002 & 003.

Figure 6.4-2 (Sheet 2 of 2)
Main Control Room Habitability System
Piping and Instrumentation Diagram

6.5 Fission Product Removal and Control Systems

6.5.1 Engineered Safety Feature (ESF) Filter Systems

This subsection is not applicable to the AP1000.

6.5.2 Containment Spray System

In the event of a design basis LOCA there is an assumed core degradation that results in a significant release of radioactivity to the containment atmosphere. This activity would consist of noble gases, particulates, and a small amount of elemental and organic iodine (as discussed in Subsection 15.6.5.3, most of the iodine would be in the particulate form). The AP1000 does not include a safety-related containment spray system to remove airborne particulates or elemental iodine. Removal of airborne activity is by natural processes that do not depend on sprays (that is sedimentation, diffusiophoresis, and thermophoresis). These removal mechanisms are discussed in Appendix 15B.

Much of the non-gaseous airborne activity would eventually be deposited in the containment sump solution. Long-term retention of iodine in the containment sump following design basis accidents requires adjustment of the sump solution pH to 7.0 or above. This pH adjustment is accomplished by the passive core cooling system and is discussed in Subsection 6.3.2.1.4.

In accordance with Reference 1, the fire protection system provides a nonsafety-related containment spray function for accident management following a severe accident. This design feature is not safety-related and is not credited in any accident analysis including the dose analysis provided in Subsection 15.6.5. Dose reduction following a severe accident may be enhanced over the natural removal mechanisms via the nonsafety-related containment spray. Subsection 15.6.5.3.2 provides additional discussion of the natural removal mechanisms. The following subsections provide a discussion of the nonsafety-related containment spray function provided by the fire protection system.

6.5.2.1 System Description

The fire protection system provides a nonsafety-related containment spray function for severe accident management. Subsection 9.5.1 provides a description of the fire protection system including equipment and valves that support the containment spray function such as the fire pumps and fire main header. This section provides the description of the portion of the fire protection system designed specifically to provide the containment spray function.

The source of water for the containment spray function is provided by the secondary fire protection system water tank. Either the motor driven or diesel driven fire protection system pump may be used to deliver fire water to the containment spray header. The flow path to containment is via the normal fire main header as shown in Figure 9.5.1-1, sheets 1 through 3. The containment spray flow path is from the fire main extension, through the fire protection system line that penetrates containment, to the containment spray riser that connects to the fire protection system header inside containment. This riser supplies two ring headers located above the containment polar crane.

6.5.2.1.1 Valves

The containment spray flow path from the fire main header contains one normally open manual valve (FPS-V048), one normally closed manual valve (FPS-V101), one locked closed manual containment isolation valve outside containment (FPS-V050), a containment isolation check valve inside containment (FPS-V052), a normally open manual isolation valve in the spray riser (FPS-V700), and

a normally closed remotely-operated valve (FPS-V701) downstream of the manual isolation valve in the spray riser.

Containment spray is initiated by first closing the passive containment cooling water system fire header isolation valve (PCS-V005) isolating the passive containment cooling water storage tank, opening the manual valves outside containment, and by opening the remotely-operated valve inside containment. The manual valves outside containment are located in valve / piping penetration room 12306. The valves are located close to the entrance door such that radiation exposures to an individual required to enter the room and align the valves would not exceed the prescribed post-accident dose limits discussed in Subsection 12.4.1.8.

Valve FPS-V701 is a fail-open air-operated valve such that the containment spray flow path can be opened following a loss of the nonsafety-related compressed air system. During shutdown operations, the fire protection system header inside containment is pressurized from the passive containment cooling water storage tank for fire protection and manual isolation valve FPS-V700 is closed.

6.5.2.1.2 Containment Spray Header and Nozzles

The containment spray header consists of a single header that feeds two ring headers located above the containment polar crane. The containment spray ring headers and spray nozzles are oriented to maximize containment volume coverage. A lower ring header is located at plant elevation 260 feet, and contains 44 spray nozzles. An upper ring header is located at plant elevation 275 feet, and contains 24 spray nozzles.

The nozzles within the spray ring header are conventional containment spray nozzles utilized in past Westinghouse pressurized water reactors. The spray nozzles are selected on the basis of drop size to provide adequate absorption of fission products from the containment atmosphere.

6.5.2.1.3 Applicable Codes and Classifications

The containment spray function is not safety-related, and therefore the valves and piping in the containment spray flow path are not required to be safety-related for the containment spray function. However, the containment isolation piping and valves are safety-related (AP1000 Equipment Class B) to perform the safety-related function of containment isolation. The classification of the remaining portions of the fire header are nonsafety-related, and are classified as Class F as discussed in Subsections 3.2.2.7 and 9.5.1. The containment spray header and valve, downstream of the manual isolation valve inside containment is nonsafety-related and classified as Class E. The containment spray header is classified as Seismic category II.

6.5.2.1.4 System Operation

During normal operation, the fire protection system header inside containment is isolated from the fire main header by closed isolation valves, including a locked closed containment isolation valve. The containment spray piping is therefore not pressurized during normal operation. During plant shutdown modes, personnel access to containment is required, and as such, the fire protection system standby header inside containment is pressurized by the water in the passive containment cooling water storage tank. During these modes, the manual isolation valve located between the header and the spray ring is closed to further isolate the containment spray header from the passive containment cooling water storage tank. Inadvertent actuation of the containment spray system during power operation and shutdown is not credible. Inadvertent actuation of the containment spray would require multiple failures of closed valves.

Severe accident management guidelines provide the operator with guidance to initiate the containment spray feature of the fire protection system. Operator action to open two manual isolation valves outside of containment followed by remotely opening the containment spray isolation valve within containment from either the main control room or the remote shutdown workstation will initiate the spray function. Containment spray may be terminated at any time by closing the remotely operated isolation valve within containment, or by closing any of the manual valves in the containment spray flow path outside containment. Operation of the containment spray will have no effect on the availability of the remainder of the fire protection system other than the loss of inventory from the secondary fire water tank due to the sprayed water. To preserve inventory for firefighting, the primary fire water tank is isolated during containment spray operation. Since the fire protection system operates in the active standby mode, i.e. the supply piping is kept full and pressurized, once the remotely operated isolation valve is opened the system will perform the containment spray function.

When water pressure in the fire main begins to fall, due to a demand for water from containment spray, the motor-driven pump starts automatically on a low-pressure signal. If the motor-driven pump fails to start, the diesel-driven pump starts upon a lower pressure signal. The pump continues to run until it is stopped manually.

6.5.2.2 Design Evaluation

6.5.2.2.1 Containment Coverage

The containment spray nozzles are the Lechler (SPRACO Company) spray nozzles or equivalent, which provide a drop size distribution which has been established by testing and found suitable for fission product removal. The fire protection system header provides a containment spray nozzle differential pressure of 40 psid, which fixes the drop size distribution. The mass mean drop size produced at this differential pressure is conservatively assumed to be 1000 microns.

The fire protection system header can provide the design flow rate of 15.2 gpm to each spray nozzle at a containment backpressure of 20 psig for a total containment spray flow of approximately 1034 gpm. Analyses of severe accident sequences show that containment backpressure is less than 20 psig after containment spray flow is initiated.

Figure 6.5-1 is a diagram of containment which shows the developed spray patterns for the containment spray ring headers. The overlay of the spray patterns on the containment is useful in illustrating the completeness of spray coverage in the sprayed region. Furthermore, as discussed in Reference 2, there is significant momentum exchange between the spray droplets and the closed air volume of the containment, which provides far greater mixing within the sprayed region than the idealized spray patterns would indicate. Therefore, even though small areas of the sprayed region are not directly sprayed by the developed spray patterns, the sprayed region of the containment is well-mixed.

The sprayed regions of containment include the region of containment above the operating deck, and the refueling cavity, which is open at the operating deck. The total free volume of the sprayed region is approximately 1.7×10^6 cubic feet which represents approximately 84% of the total containment free volume.

6.5.2.2.2 Aerosol Removal Effectiveness of Sprays

The removal of aerosol activity from the containment atmosphere by sprays is simply described by:

$$C_t = C_o e^{-\lambda t}$$

where:

C_t = concentration of aerosols at time "t"

C_o = initial concentration of aerosols

λ = aerosol removal coefficient for sprays (hr^{-1})

t = elapsed time (hr)

However, to fully model the removal of aerosols from the containment atmosphere in a severe accident, the analysis also needs to take into account mixing between the sprayed and unsprayed regions and the rate of release of activity from the core into the containment atmosphere.

6.5.2.2.3 Aerosol Removal Coefficient for Sprays

The aerosol removal coefficient for sprays is calculated by the following equation from the Standard Review Plan (Reference 2):

$$\lambda = 3hfE / 2Vd$$

where:

h = average spray drop fall height (ft)

f = spray flow rate (ft^3/hr)

E = collection efficiency

V = volume of the containment exposed to sprays

d = average spray drop diameter (ft)

Reference 2 identifies a value for E/d of 10 m^{-1} (3.05 ft^{-1}) as being conservative until the air concentration is reduced by a factor of 50. Using this together with a nominal spray fall height of 125 feet and a nominal flow rate of 1000 gpm (8022 ft^3/hr), the aerosol removal coefficient for the containment sprays is approximately 2.7 hr^{-1} in the sprayed volume. This spray removal coefficient is significantly greater than that associated with the natural removal mechanisms assumed in the design basis analysis (see Appendix 15B) and would enhance dose reduction following a severe accident.

The decontamination factor (DF) that would be achieved at any point in time is dependent on the timing of spray operation. Additionally, the continuing release of activity must be factored into the determination of DF (i.e., the DF would be based on the integrated activity release to the containment at a point in time, not on the amount of activity present in the containment atmosphere at the time spray operation is initiated). After a DF of 50 is reached, the value of E/D would be reduced by a factor of ten (Reference 2) and the aerosol removal coefficient would also be reduced by the same factor to a value of 0.27 hr^{-1}. Based on an assumed spray actuation shortly after the onset of core melt and a nominal spray duration of three hours, the DF of 50 would not be reached until after spray operation was terminated.

6.5.3 Fission Product Control Systems

The containment atmosphere is depleted of elemental iodine and particulates as a result of the passive removal processes discussed in Appendix 15B. No active fission product control systems are required in the AP1000 design to meet regulatory requirements. The passive removal processes and the limited leakage from the containment of less than L_a as defined in the Containment Leakage Rate Testing Program, result in doses less than the regulatory guideline limits. (See Subsection 15.6.5.3.)

6.5.3.1 Primary Containment

The containment consists of a freestanding cylindrical steel vessel with ellipsoidal heads. The containment structural design is presented in Subsection 3.8.2.

The containment vessel, penetrations, and isolation valves function to limit the release of radioactive materials following postulated accidents. The resulting offsite doses are less than regulatory guideline limits. Containment parameters affecting fission product release accident analyses are given in Table 6.5.3-1.

Long-term containment pressure and temperature response to the design basis accident are presented in Section 6.2.

The containment air filtration system may be operated for personnel access to the containment when the reactor is at power, as presented in Subsection 9.4.7. For this reason, the radiological assessment of a loss-of-coolant accident assumes that both trains of the air filtration system are in service at the initiation of the event. The isolation valves receive automatic signals to close from diverse parameters. The valves are designed to close automatically as described in Subsection 6.2.3.

Containment hydrogen control systems are presented in Subsection 6.2.4.

6.5.3.2 Secondary Containment

There is no secondary containment provided for the fission product control following design basis accident.

The annulus between containment and shield building from the elevation 100′-0″ to the elevation 132′-3″ acts as a holdup volume to limit the spread of fission products following severe accident. Most containment penetrations are located within this holdup volume. It is served by the radiologically controlled area ventilation system (VAS) described in Subsection 9.4.3. Isolation dampers are provided to reduce the air interchange between the holdup volume and environment. Fission product control via holdup within the annulus is considered in severe accident dose analysis but excluded from consideration for design basis accident dose evaluations presented in Chapter 15.

6.5.4 Combined License Information

This section contained no requirement for additional information.

6.5.5 References

1. SECY-97-044, "Policy and Key Technical Issues Pertaining to the Westinghouse AP600 Standardized Passive Reactor Design," June 30, 1997.

2. NUREG-0800, Section 6.5.2, Revision 2, "Containment Spray as a Fission Product Cleanup System."

Table 6.5.3-1
Primary Containment Operation
Following a Design Basis Accident

Type of structure	Freestanding cylindrical steel vessel with ellipsoidal heads
Containment free volume (ft^3)	2.06×10^6
Design basis containment leak rate	0.10% containment air weight per day

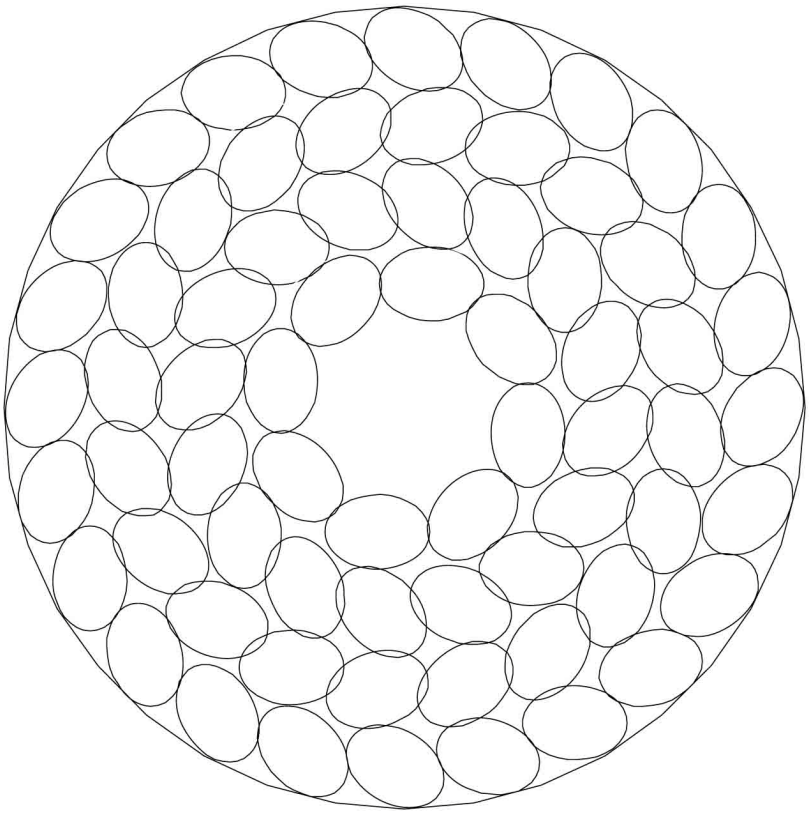

Figure 6.5-1
Containment Spray Coverage at Operating Deck

6.6 Inservice Inspection of Class 2, 3, and MC Components

The initial inservice inspection program incorporates the latest edition and addenda of the ASME Boiler and Pressure Vessel Code approved in 10 CFR 50.55a(b) on the date 12 months before initial fuel load. Inservice examination of components and system pressure tests conducted during successive 120-month inspection intervals must comply with the requirements of the latest edition and addenda of the Code incorporated by reference in 10 CFR 50.55a(b) 12 months before the start of the 120-month inspection interval (or the optional ASME Code cases listed in Regulatory Guide 1.147, that are incorporated by reference in 10 CFR 50.55a(b), subject to the limitations and modifications listed in 10 CFR 50.55a(b)).

6.6.1 Components Subject to Examination

Preservice and inservice inspections of Quality Group B and C pressure retaining components (ASME Code, Section III Class 2 and 3 components) such as vessels, piping, pumps, valves, bolting, and supports as identified in Subsection 3.2.2 are performed in accordance with the ASME Code, Section XI, as required by 10 CFR 50.55a(g). This includes the ASME Code Section XI Mandatory Appendices. Preservice and inservice inspections of Quality Group B components that are ASME Class MC (metallic containment) pressure-retaining components and integral attachments are performed in accordance with the ASME Code, Section XI, as required by 10 CFR 50.55a. Refer to Subsection 3.8.2, “Steel Containment” for design details, including accessibility of primary containment.

The responsibility for preparation of the pre-service inspection program (nondestructive examination) is described in Subsection 6.6.9. The responsibility for the inservice inspection program that is required prior to commercial operation is described in Subsection 6.6.9. These programs will address applicable inservice inspection provisions of 10 CFR 50.55a(g). The pre-service program will provide details of areas subject to inspection, as well as the method and extent of pre-service inspection. The inservice inspection program will detail the areas subject to inspection and method, extent, and frequency of inspection.

Class 2 and 3 components are included in the equipment designation list and the line designation list contained in the inservice inspection program.

6.6.2 Accessibility

ASME Code Class 2, 3, and MC components are designed so that access is provided in the installed condition for visual, surface and volumetric examinations specified by the ASME Code. See Subsection 5.2.1.1 for a discussion of the baseline ASME Code edition and Addenda. Design provisions, in accordance with Section XI, IWA-1500, are formally implemented in the Class 2, 3, and MC component design processes.

The goal of designing for inspectability is to provide for the inspectability access and conformance of component design with available inspection equipment and techniques. Factors such as examination requirements, examination techniques, accessibility, component geometry and material selection are used in evaluating component designs. Examination requirements and examination techniques are defined by inservice inspection personnel. Inservice inspection review as part of the design process provides component designs that conform to inspection requirements and establishes recommendations for enhanced inspections.

Considerable experience has been drawn on in designing, locating, and supporting Quality Group B and C (ASME Class 2 and 3) and Class MC pressure-retaining components to permit pre-service and inservice inspection required by Section XI of the ASME Code. Factors such as examination requirements, examination techniques, accessibility, component geometry, and material selections

are used in establishing the designs. The inspection design goals are to eliminate uninspectable components, reduce occupational radiation exposure, reduce inspection times, allow state-of-the-art inspection systems, and enhance detection and the reliability of flaw characterization. There are no Quality Group B and C components or Class MC components, which require inservice inspection during reactor operation.

Removable insulation is provided on piping systems requiring volumetric and surface inspection. Removable hangers and pipe whip restraints are provided, as necessary and practical, to facilitate inservice inspection. Working platforms are provided in areas requiring inspection and servicing of pumps and valves. Temporary or permanent platforms, scaffolding, and ladders are provided to facilitate access to piping welds. The components and welds requiring inservice inspection are designed to allow for the application of the required inservice inspection methods, that is, sufficient clearances for personnel and equipment, maximized examination surface distances, two-sided access, favorable materials, weld joint simplicity, elimination of geometrical interferences, and proper weld surface preparation.

Many of the ASME Code, Section III, Class 2 and 3 components are included in modules which are fabricated offsite and shipped to the site, as described in Subsection 3.9.1.5. The modules are designed and engineered to provide access for in-service inspection and maintenance activities. The attention to detail that is engineered into the modules prior to construction improves the accessibility for inspection and maintenance.

Future unanticipated changes in the Section XI requirements could, however, necessitate relief requests. Relief from the inspection requirements of Section XI will be requested when full compliance is not practical according to the requirements of 10 CFR 50.55a. In such cases, specific information will be provided to identify the applicable ASME Code requirements, justification for the relief request, and the inspection method to be used as an alternative.

Space is provided to handle and store insulation, structural members, shielding, and other material related to the inspection. Suitable hoists and other handling equipment, lighting, and sources of power for inspection equipment are installed at appropriate locations.

During the construction phase of the project, anomalies and construction issues are addressed using change control procedures. Modifications reviewed following design certification adhere to the same level of review as the certified design per 10 CFR Part 50, Appendix B as implemented by the Westinghouse Quality Management System (QMS). The QMS requires that changes to approved design documents, including field changes, are subject to the same review and approval process as the original design. This explicitly requires the field change process to follow the same level of review that was required during the design process. Accessibility and inspectability are key components of the design process.

Control of accessibility for inspectability and testing during post-design certification activities is provided via procedures for design control and plant modifications.

6.6.3 Examination Techniques and Procedures

The visual, surface, and volumetric examination techniques and procedures are in accordance with the requirements of ASME Code, Section XI, Article IWA-2000. Approved Code Cases listed in Regulatory Guide 1.147 are applied as the need arises during the pre-service inspection. Approved Code Cases determined as necessary to accomplish pre-service inspection activities are used.

The liquid penetrant or magnetic particle methods are used for surface examinations. Ultrasonic or eddy current methods (whether manual or remote) are used for volumetric examinations.

The report format for reportable indications and data compilation provide for comparison of data from subsequent examinations.

6.6.3.1 Examination Methods

Visual Examination

Visual examination methods VT-1, VT-2 and VT-3 are conducted in accordance with ASME Section XI, IWA-2210. In addition, VT-2 examinations meet the requirements of IWA-5240.

Where direct visual VT-1 examinations are conducted without the use of mirrors or with other viewing aids, clearance is provided in accordance with Table IWA-2210-1.

Surface Examination

Magnetic particle, liquid penetrant, and eddy current examination techniques are performed in accordance with ASME Section XI, IWA-2221, IWA-2222, and IWA-2223 respectively. Direct examination access for magnetic particle (MT) and liquid penetrant (PT) examination is the same as that required for direct visual (VT-1) examination (see Visual Examination), except that additional access is provided as necessary to enable physical contact with the item in order to perform the examination. Remote MT and PT generally are not appropriate as a standard examination process; however, boroscopes and mirrors can be used at close range to improve the angle of vision.

Ultrasonic Examination

Volumetric ultrasonic direct examination is performed in accordance with ASME Section XI, IWA-2232, which references mandatory Appendix I.

Alternative Examination Techniques

As provided by ASME Section XI, IWA-2240, alternative examination methods, a combination of methods, or newly developed techniques may be substituted for the methods specified for a given item in this section, provided that they are demonstrated to be equivalent or superior to the specified method. This provision allows for the use of newly developed examination methods, techniques, etc., which may result in improvements in examination reliability and reductions in personnel exposure. In accordance with 10 CFR 50.55a(b)(2)(xix), IWA-2240 as written in the 1997 Addenda of ASME Section XI must be used when applying these provisions.

6.6.3.2 Qualification of Personnel and Examination Systems for Ultrasonic Examination

Personnel performing examinations shall be qualified in accordance with ASME Section XI, Appendix VII. Ultrasonic examination systems shall be qualified in accordance with industry accepted programs for implementation of ASME Section XI, Appendix VIII.

6.6.3.3 Relief Requests

The specific areas where the applicable ASME Code requirements cannot be met are identified after the examinations are performed. Should relief requests be required, they will be developed through the regulatory process and submitted to the NRC for approval in accordance with 10 CFR 50.55a(a)(3) or 50.55a(g)(5). The relief requests include appropriate justifications and proposed alternative inspection methods.

6.6.4 Inspection Intervals

Inspection intervals included in the inspection program are as defined in Subarticles IWA-2400, IWC-2400, IWD-2400, IWE-2400, and IWF-2400 of the ASME Code, Section XI. The periods within each inspection interval may be extended by as much as one year to permit inspections to be concurrent with plant outages. It is intended that inservice examinations be performed during normal plant outages, such as refueling shutdown or maintenance shutdowns occurring during the inspection interval.

Because 10 CFR 50.55a(g)(4) requires 120-month inspection intervals, Inspection Program B of IWB-2400 must be chosen. The inspection interval is divided into three periods. Period one comprises the first three years of the interval, period two comprises the next four years of the interval, and period three comprises the remaining three years of the inspection interval. The periods within each inspection interval may be extended by as much as one year to permit inspections to be concurrent with plant outages. The adjustment of period end dates shall not alter the rules and requirements for scheduling inspection intervals. It is intended that inservice examinations be performed during normal plant outages, such as refueling shutdown or maintenance shutdowns occurring during the inspection interval.

6.6.5 Examination Categories and Requirements

Examination categories and examination requirements (examination methods, acceptance criteria, extent of examination, and frequency of examination) for Class 2 components are in accordance with Subsection IWC and Table IWC-2500-1 of the ASME Code, Section XI. Similar information for Class 3 components is in conformance with Subsection IWD and Table IWD-2500-1. For component supports, examination categories and examination requirements are in conformance with Subsection IWF and Table IWF-2500-1; and for Class MC components, examination categories and examination requirements are in conformance with Subsection IWE and Table IWE-2500-1 of ASME Code, Section XI.

The pre-service examination of Class 2 components is according to the requirements of Subarticle IWC-2200. The pre-service examination of Class MC components is in accordance with the requirements of Subarticle IWE-2200. The pre-service examination requirements for component supports are in accordance with the requirements of Subarticle IWF-2200. The pre-service examination of Class 3 components is according to the requirements of Subarticle IWD-2200.

As provided in ASME Section XI, IWC-1220, IWD-1220, and IWE-1220, certain portions of Class 2, 3, and MC systems are exempt from the volumetric, surface, and visual examination requirements of IWC-2500, IWD-2500, and IWE-2500. Supports associated with Class 2, 3, and MC components are also exempt in accordance with the requirements of IWF-1230.

6.6.6 Evaluation of Examination Results

Examination results are evaluated per the acceptance standards found in IWA-3000, IWC-3000, IWD-3000, IWE 3000, and IWF-3000 of the ASME Code, Section XI. Repair and replacement procedures are in accordance with ASME Code, Section XI, Article IWA-4000.

Components containing flaws or relevant conditions and accepted for continued service in accordance with the requirements of IWC-3122.3 or IWC-3132.3 for Class 2 components, IWD-3000 for Class 3 components, IWE-3122.3 for Class MC components, or IWF-3112.2 or IWF-3122.2 for component supports, are subjected to successive period examinations in accordance with the requirements of IWC-2420, IWD-2420, IWE-2420, or IWF-2420, respectively. Examinations that reveal flaws or relevant conditions exceeding Table IWC-3410-1, IWD-3000, IWE-3000, or IWF-3400

acceptance standards are extended to include additional examinations in accordance with the requirements of IWC-2430, IWD-2430, or IWF-2430, respectively.

6.6.7 System Pressure Tests

System pressure tests comply with IWA-5000, IWC-5000, IWD-5000, and IWE-5000 of the ASME Code, Section XI, for Class 2, 3, and MC components. Pressure testing of Class MC components is performed per the 10 CFR 50 Appendix J “Containment Leak Rate Testing” Program.

6.6.8 Augmented Inservice Inspection to Protect against Postulated Piping Failures

An augmented inspection program is developed for high-energy fluid systems piping between containment isolation valves. Such a program is also developed where no isolation valve is used inside containment between the first rigid pipe connection to the containment penetration or the first pipe whip restraint inside containment and the outside isolation valve. This program provides for 100 percent volumetric examination of welds in the affected piping during each inspection interval, conducted according to the ASME Code, Section XI. The program covers the break exclusion portion of high-energy fluid systems described in Subsections 3.6.1 and 3.6.2.

There is no requirement for an augmented inspection of ASME Code, Section III Class 1, 2, or 3 pipe to address erosion-corrosion-induced pipe wall thinning. Class 1, 2, and 3 pipe containing single-phase water or two-phase steam and water is fabricated of erosion-corrosion resistant material. See Section 10.1 for information on monitoring of nonsafety-related pipe for erosion-corrosion.

6.6.9 Combined License Information Items

6.6.9.1 Inspection Programs

The pre-service inspection program (nondestructive examination) and an inservice inspection program for ASME Code, Section III Class 2, 3, and MC systems, components, and supports are addressed in Section 6.6 introduction, and in Subsections 6.6.1, 6.6.3.1, 6.6.3.2, 6.6.3.3, 6.6.4, and 6.6.6.

6.6.9.2 Construction Activities

The controls to preserve accessibility and inspectability for ASME Code, Section III, Class 2, 3, and MC components and piping during construction or other post design certification activities are addressed in Subsection 6.6.2.

Appendix 6A Fission Product Distribution in the AP1000 Post-Design Basis Accident Containment Atmosphere

The AP1000 design-basis analyses for hydrogen control (Subsection 6.2.4.3) and natural aerosol removal coefficient (Appendix 15B) assume that the fission products and hydrogen released to the containment following a postulated design basis loss of coolant accident (LOCA) are homogeneously distributed in the containment atmosphere within the open compartments that participate in natural circulation. The purpose of this discussion is to justify the homogeneous assumption for aerosol natural deposition calculations.

The following evaluation includes:

- Identification of the accident sequence assumptions and boundary conditions in the reactor coolant system and containment prior to the fission product and hydrogen releases
- Identification of the limiting steam and fission product release location from the reactor coolant system to the containment
- Discussion of containment natural circulation in quasi-steady conditions
- Discussion of AP1000 passive containment cooling system (PCS) large-scale test (LST) insights that support the well-mixed assumption

6A.1 Design Basis Sequence Assumptions

The design-basis fission product source term (Subsection 15.6.5.3.1) is superimposed onto thermal-hydraulic conditions of the design-basis accident sequence for the evaluation of fission product deposition. The following assumptions define the design basis conditions. The AP1000 design-basis sequence consists of a LOCA which drains the reactor coolant system (RCS) and core makeup tanks (CMTs) sufficiently to activate the automatic depressurization system (ADS). Both trains of all four stages of automatic depressurization system open sequentially. During the depressurization, the core makeup tanks and accumulators inject into the reactor vessel downcomer. The final reactor coolant system pressure is essentially equal to the containment pressure which allows gravity injection of the IRWST water. Steam is produced in the vessel at the rate dictated by decay heat minus the heat in the volatile fission products which have been released from the core. The passive containment cooling system water flow is initiated based on high containment pressure from the blowdown or the automatic depressurization system prior to the release of fission products.

Fission product release occurs from a fully depressurized reactor coolant system. The aerosols are carried into the containment in a buoyancy-driven steam flow. The earliest time of fission product release from core degradation is well past the time of the blowdown and automatic depressurization. The containment condition during and following the release is quasi-steady-state. Internal heat sinks are assumed to be essentially thermally-saturated and no longer effective, and the condensation rate of steam on the containment dome and shell is equivalent to the decay heat steaming rate.

6A.1.1 Break Size and Fission Product Release Location in Containment

This section discusses each of the postulated fission product release locations from the reactor coolant system, the containment location for each, the size limitations and the phenomena associated with the break locations. It is shown that it is appropriate to assume that the steam and fission products are released from the reactor coolant system hot leg to the containment above the maximum water flood-up elevation in the steam generator compartment gas space.

6A.1.1.1 Releases From Depressurization System Lines

Any design-basis LOCA which can be postulated to produce a large core activity release to containment will actuate the four stages of the automatic depressurization system. The stage 1, 2 and 3 automatic depressurization system lines, which relieve from the top of the pressurizer (see Figure 6A-1), deliver flow to the containment through the in-containment refueling water storage tank (IRWST). This is not considered to be a major fission product release pathway because the IRWST is a cold, effectively closed system with no leakage pathway to the environment. The IRWST is nearly full of water during the depressurization blowdown which would trap any postulated fission products released to the IRWST. At the time the water is drained below the spargers, the reactor coolant system is depressurized with stage 4 automatic depressurization system open, and the IRWST vents, which are closed with flappers, are not expected be significantly opened by the small buoyancy-driven flows. Aerosols released from stages 1, 2 and 3, either before or after the draining of the IRWST, would essentially be trapped in the water or in the IRWST compartment. Therefore, this pathway is conservatively neglected as a release pathway from the reactor coolant system to maximize the activity entering the containment atmosphere.

Stage 4 automatic depressurization system lines relieve reactor coolant system coolant, steam, and fission products from the hot legs (see Figure 6A-1) to the steam generator compartments above the maximum water flood-up level. The stage 4 lines consist of four 14-inch schedule 160 lines. Two lines are connected to each of the two hot legs. Each of these trains relieves at the 112-foot elevation to a steam generator compartment.

Of the postulated release locations in the reactor coolant system, openings in the hot-side piping, such as the stage 4 automatic depressurization system, provide the lowest resistance pathway for fission product releases to the containment because of the large flow area, high temperatures, short resident time and low surface area for aerosol deposition in the reactor coolant system. To reach openings in the cold side piping when stage 4 automatic depressurization system valves are open, the reactor coolant system low-pressure natural circulation flow must pass through the steam generator tubes (see Figure 6A-1). At the superheated steam temperature of the gas which accompanies the fission product flow, significant heat transfer would take place in the steam generator tubes which are cooled on the secondary side by water. Aerosol deposition to the tubes would remove fission products from the release before the flow reached the containment. Therefore, releases from cold-side breaks are less severe than hot side breaks with the stage 4 automatic depressurization system open.

6A.1.1.2 Releases From Coolant Loop Breaks

Breaks in the reactor coolant system loop piping (hot legs or cold legs) relieve primary coolant, steam and fission products to the steam generator compartments. Assuming double-ended guillotine breaks, the hot-leg break has a diameter of 31 inches (78.7 cm) and the cold-leg break has a diameter of 22 inches (55.9 cm). Breaks in the hot leg piping are more limiting than breaks in the cold leg with respect to the fission product releases to the containment because of the larger break area, higher temperatures, shorter resident time and lower surface area for aerosol deposition in the reactor coolant system. Therefore, of the coolant loop breaks, hot leg breaks to the steam generator compartment provide the more conservative magnitude of fission product release to the containment. Because of the similar fission product flow path, release magnitude and release location, the hot leg breaks can be lumped with the stage 4 automatic depressurization system releases.

6A.1.1.3 Direct Vessel Injection Line Breaks

A break in one of the two direct vessel injection lines can relieve steam and fission products outside the steam generator compartments to one of the two dead-ended accumulator compartments below the core makeup tank room. The piping is 8-inch diameter schedule 160 piping, but an orifice at the

reactor vessel wall limits the break size to a 4-inch diameter. The nozzle connects to the reactor vessel downcomer (see Figure 6A-1), so all direct vessel injection line breaks relieve from the cold-side of the reactor coolant system. The accumulator compartments have significant heat sink surfaces (equipment, grating, support structures and compartment walls) for aerosol deposition to trap fission products within the dead-ended compartment. Given the small break size, cold-side location of the break, the compartment retention capacity, and the large relief flow area associated with the open stage 4 automatic depressurization system valves, very little fission product release is expected from the direct vessel injection line. The steam release to an accumulator compartment is negligible with respect to that from the stage 4 automatic depressurization system.

6A.1.1.4 Core Makeup Tank Balance Line Breaks

Breaks in the core makeup tank balance lines can relieve steam and fission products to the core makeup tank room. The balance line piping is 8-inch diameter schedule 160 piping. The balance line nozzle is attached to a cold leg (see Figure 6A-1). Given the small break size, cold-side location of the break, the compartment retention capacity, and the large relief flow area associated with the open stage 4 automatic depressurization system valves, very little fission product release is expected from the balance line. The steam, hydrogen and fission product releases to the core makeup tank room is negligible with respect to the release from the stage 4 automatic depressurization system.

6A.1.1.5 Chemical and Volume Control System Line Breaks

A break in the chemical and volume control system (CVS) line relieves to the dead-ended chemical and volume control system compartment below the core makeup tank room. The chemical and volume control system piping is 3-inch diameter schedule 160 piping. The inlet of the chemical and volume control system draws from the cold leg and the outlet discharges to the reactor coolant pump suction, both on the cold-side of the reactor coolant system (see Figure 6A-1). Given the small break size, cold-side location of the break, the compartment retention capacity, and the large relief flow area associated with the open stage 4 automatic depressurization system valves, very little fission product release is expected from the chemical and volume control system piping. The steam release to the chemical and volume control system compartment is negligible with respect to that from the stage 4 automatic depressurization system.

6A.1.1.6 Fission Product Release Location Conclusion

The fission product releases are expected to discharge mainly from the stage 4 automatic depressurization system lines, which relieve from the hot legs to the steam generator compartments. Stage 4 automatic depressurization system is open in all design-basis LOCA sequences that can be postulated to produce large core activity releases to the containment. For a coolant loop break, the release would also go to the steam generator compartments along with the releases from the stage 4 automatic depressurization system lines. Fission products released to other postulated containment locations are negligible by comparison because the releases are from the cold-side of the reactor coolant system through comparatively long and narrow piping pathways. Therefore, the bounding release pathway is a hot-side break into the steam generator compartments with fission product and steam releases through the break and stage 4 automatic depressurization system.

6A.2 Containment Natural Circulation and Mixing

This section describes the natural circulation flow path and the entrainment processes in the containment atmosphere. Figure 6A-2 graphically depicts the containment natural circulation flow paths and the entrainment processes.

The steam plume, rising from a point low in the containment, and the condensation on the containment surface and wall entrainment rates provide the driving forces for natural circulation in the

containment. Based on the sequence timing, the containment conditions at the time of the fission product releases are quasi-steady-state. Therefore, it is assumed:

$Q_{st} \approx$ constant

$Q_{cond} = Q_{st}$

where:

Q_{st} = steam volumetric flowrate

Q_{cond} = condensation volumetric flowrate.

Steam and fission products are released low in the containment through stage 4 automatic depressurization system at the 112-foot elevation as hot, buoyant plumes from the low pressure primary system into the steam generator compartments. Entrainment into the rising plume drives circulation of surrounding atmosphere into the bottom of the steam generator compartment through the openings to the core makeup tank room. The fission products are released from the reactor coolant system with the steam plumes. The plumes rise through the steam generator compartments, mix with the flow entrained from below and are released into the upper compartment at the top of the steam generator doghouses (153-foot elevation). The plumes rise unconstrained for over 100 feet in the containment. As the plumes rise, the surrounding upper compartment gas mixture is entrained. The steam, fission products and any non-condensable gases (e.g. hydrogen and air) in the plumes are mixed with a large volume of entrained atmosphere in the rising plume.

An estimate of the volume entrained into the plume above the operating deck is made conservatively neglecting entrainment into the lower steam generator compartment, and assuming the plumes from the two steam generator compartments behave as one:

$Q_{ent} = 0.15 * B^{1/3} * Z^{5/3}$ (Reference 1)

where:

Q_{ent} = volumetric flowrate of entrained gas in the rising plume above the operating deck

Z = height of rising plume

B = $g * Q_{ST} * (\rho_{amb} - \rho_{st})/\rho_{amb}$

g = gravitational acceleration

The fission product releases occur at approximately 1 hour when the best estimate (no uncertainty) 1979 ANS decay heat rate is 1.4%. At one hour, the volatile fission products which are released from the core contribute 30% of the decay heat, so the decay heat fraction is 1.0% and 34 MW of steam is generated in the reactor vessel. At a containment pressure of approximately 50 psia, the source flow is approximately 295 ft^3/sec and $\Delta\rho/\rho$ is approximately 1/4. Thus, $B^{1/3}$ = 13.3 $ft^{4/3}$/sec. For a release into the upper compartment where Z = 125 ft, Q_{ent} = 6250 ft^3/sec and Q_{ent}/Q_{st} = 21.2.

At 24 hours, best estimate (no uncertainty) 1979 ANS decay heat is 0.6%, and the volatile fission products released from the core contribute 15% of the decay heat. The heat generated in the vessel, generating steam is 17.3 MW, assuming the containment pressure is 34 psia and $\Delta\rho/\rho$ = 0.32. So the source flow is approximately 216 ft^3/sec, $B^{1/3}$ = 13.1 $ft^{4/3}$/sec, Q_{ent} = 6142 ft^3/sec and Q_{ent}/Q_{st} = 28.4.

Therefore, for the AP1000 height above the operating deck, a conservative entrainment ratio for times greater than 1 hour after accident initiation is:

$$Q_{ent}/Q_{st} > 20$$

The application of water to the external surface of the containment shell maintains the containment shell at a cool temperature. The condensation of steam on the containment shell creates a heavy, air-rich downward flowing gas boundary layer on the wall. Fission products are carried along in the wall layer flow. As it flows downward along the wall, the wall layer also entrains surrounding mixture. Thus, the circulation flow rate in the above-deck volume generates significant circulation flow.

A review of literature on circulation within enclosures (appendix 9.C of (Reference 2) shows that as long as there is cooling on the inner surface of the containment shell, there are no regions of stratification in the containment including under the containment dome. There are significant recirculation flows in the stratified regions between the plume and the wall layer. Thus concentration gradients are small and there are no stagnant regions above the operating deck.

The circulation time constant due to entrainment above the operating deck for the AP1000 can be estimated by $V/(20*Q_{st})$, where V is the containment volume above the operating deck, and the steam generator compartments and core makeup tank room above the 108′ elevation, $2.0x10^6$ ft^3. Therefore, the circulation time constant at 1 hour is approximately 340 seconds. At 24 hours it is 462 seconds. The time constant is estimated to be conservatively large as it does not include entrainment into the downward flowing wall layer. At 1 hour, during the fission product release, the time constant of 340 seconds is very short compared to the 1.3 hour fission product release duration. Therefore, the fission products can be assumed to be homogeneous within the gas volume as soon as they are released. There is no stagnant region in the upper compartment as the entire volume participates in the rising plume, entrainment flow and wall layer. Stratification exists in the form of a relatively shallow, continuous vertical steam gradient as discussed in section 3.0.

Over the time period of interest, no mechanisms exist to separate the non-condensable gases (air and hydrogen) once they are mixed in the rising plumes. The molecular weight difference is so overwhelmed by natural circulation it does not lead to gravitational separation. The terminal gravitational settling rate of hydrogen in air at 1 atm and 25°C is less than 10^{-6} cm/sec (Reference 4). Over the height of the upper compartment, 125 ft, the average separation length is 62.5 ft (1588 cm) so the time for gravitational separation of the hydrogen and air is $1.6x10^9$ seconds. By comparing the separation time to the time constant for the plume entrainment circulation (463 seconds) it is determined that the separation rate is orders of magnitude less effective than the convective mixing forces. Thus gravity effects do not lead to separation of hydrogen from the non-condensable mixture.

As the downward boundary layer flow reaches the operating deck (135-foot elevation), it has been cooled and somewhat depleted of steam. The air, hydrogen and fission products remain well-mixed in the flow. Vents in the operating deck (135′ elevation, see Figure 6A-2) and a gap between the operating deck and the containment wall allow the denser gases to “drain” down into the maintenance floor area and vertical access tunnel through two large vertical openings which empty to the steam generator compartments. Little condensation is expected below the operating deck in the quasi-steady-state condition as the metal heat sinks are essentially thermally-saturated. The condensation on heat sinks below the operating deck is small compared to that on the steel shell. The maintenance floor area and vertical access tunnel communicates with the steam generator compartments such that air flow will freely pass to the steam generator compartments. In the steam generator compartment, the circulation flow is entrained by the initial steam source, and the circuit begins again.

The accumulator and chemical and volume control system compartments and the reactor cavity, including the reactor coolant drain tank room, do not participate in the large-scale natural circulation

flow as they are dead-ended or filled with water. The IRWST compartment is essentially sealed at the vents by flappers after blowdown. The accumulator and chemical and volume control system compartments, IRWST, reactor cavity and reactor coolant drain tank compartments are not considered in the calculation of the aerosol deposition.

6A.3 Insights From the Passive Containment Cooling System Large Scale Test and AP1000 Stratification Studies

The AP600 passive containment cooling system Large Scale Test (LST) provides insight into the circulation and stratification behavior in the AP1000 containment. The following results are consistent with international test data from various scales (Reference 2, Appendix 9.C). Since the large scale test did not include a flow path into the simulated steam generator compartment, the degree of mixing of injected light non-condensable gases with the existing air throughout the test vessel is conservatively underestimated. This is because the extra flow path would allow density-driven circulation through the path into the compartment, introducing an additional mixing mechanism which exists in AP1000.

In the large scale test rising plume, large amounts of surrounding air-steam mixture were entrained with the released gases. Estimates of entrainment above the deck in large scale test show that about one times the break volumetric flow is entrained. In several large scale test tests, 217.1, 218.1, 219.1, and 221.1, in which helium (a hydrogen simulant) was released in an amount equal to 10-20 volume percent, non-condensable gas concentrations were measured (Reference 3). The helium fraction was reduced from 100% at the release point to 50% of the non-condensable gas in the dome during the initial period of injection. For design basis hydrogen releases, the hydrogen concentration as a fraction of the non-condensable gas in the dome would be much less due to the increased height for entrainment.

The existence of circulation under the dome in the large scale test can be seen based on the reduction of helium non-condensable fraction over time after the helium release stops. The mixing of helium above the deck establishes homogeneous concentrations in only a few minutes in the large scale test. Note that it was seen to take hours for the circulation to mix the injected helium with the non-condensable gases in the compartment below the deck, however, this was due to a lack of a flow path in the simulated steam generator compartments. Because of the additional height for entrainment in the AP1000, circulation is about 10 times greater than in the large scale test based on plume entrainment alone. Wall layer entrainment and circulation through the steam generator compartment would further increase the circulation in AP1000. This result indicates that in the AP1000 circulation distributes the injected non-condensable gases with the air throughout the containment quickly compared to the rate of release.

The effect of external cooling on non-condensable gas distributions was studied in large scale test 219.1 which started out with a dry external shell, injected helium, and then initiated the external water cooling. Non-condensable gas data showed that the application of external cooling acts to accelerate the mixing of non-condensable gases, which is probably due to the higher wall layer entrainment rate from the higher condensation rate on the cooler shell.

As discussed above, the fluid dynamics of entrainment into a buoyant plume and wall boundary layers generate large amounts of circulation within the above deck region. Thus, the region is not a static, layered stratification, and there are no stagnant pockets of gases that do not participate in the circulation. The physics do, however, lead to a standing vertical steam density gradient in the circulating stratified region, which will tend to be slightly richer in steam at the top due to the lower density of the injected steam.

Based on the above, at quasi-steady conditions, the decay heat steaming and heat and mass transfer to the steel shell create natural circulation in the containment that mixes the fission products

and hydrogen quickly throughout the circulating volume. Circulation time constants indicate that it is reasonable to assume non-condensable gases and fission products can be assumed to be homogeneous in the volumes participating in the circulation. The rising plume and the cooling of the shell create a vertical steam density gradient and a vertical temperature gradient in the upper compartment circulating stratified region. The density and temperature gradients result from a balance between the forces that drive the natural circulation. In the evaluation, no credit is taken for cold plumes falling from the containment dome which cause further circulation above the operating deck.

In Reference 5, studies were performed to demonstrate that the AP1000 containment is at least as well-mixed as the AP600 containment. Studies performed indicate the increase in containment height slightly improves the steady state mixing for the AP1000 when compared to the AP600, and therefore the conclusions regarding the mixing characteristics of the AP600 containment can be applied to the AP1000 containment.

Based on the above, condensation and sensible heat transfer occur over the entire steel shell, albeit at different rates over the height of the shell. As shown in Appendix 15B, thermophoresis and diffusiophoresis are directly related to the heat and mass transfer. Fission products are present at all sites of steam condensation and sensible heat transfer in the containment. In Appendix 15B, the processes are modeled by assuming homogeneous aerosol mass distribution throughout the circulating volume and averaging the steam condensation and sensible heat transfer over the entire upper shell. This treatment provides a valid estimate of the aerosol deposition rates.

6A.4 Conclusions

Based on first principal arguments and insight from testing at various scales, the following conclusions are made with respect to mixing in the AP1000 containment during quasi-steady conditions:

- As long as there is cooling on the inner surface of the containment shell, downward wall flow will prevent stagnation under the dome
- No unmixed pockets develop as the doorways extend to the floor and vents are in the ceiling. For the rooms participating in the natural circulation flow, the entire volume participates in the circulation
- The rising plume, condensation of steam on the containment shell, and downward flowing wall layer create vertical steam density and temperature gradients above the operating deck
- Fission products and hydrogen are quickly and uniformly mixed, relative to the duration of the release, in the containment volumes participating in the natural circulation
- For the purpose of calculating long-term aerosol deposition, it is reasonable to assume that aerosols and non-condensable gases are homogeneous throughout the major compartments participating in the containment natural circulation: the steam generator compartments, upper compartment and core makeup tank room.

6A.5 References

1. Peterson, P., “Scaling and Analysis of Mixing in Large Stratified Volumes,” International Journal of Heat and Mass Transfer, Vol. 37, Supplement 1, pp. 97-106, 1994.

2. WCAP-15846 (Proprietary) and WCAP-15862 (Non-Proprietary) “WGOTHIC Application to AP600 and AP1000,” Revision 1, March 2004.

3. WCAP-14135, “Final Data Report for Passive Containment Cooling System Large Scale Test, Phase 2 and Phase 3,” Revision 3, November 1998.

4. Linder, P., “Air Filters for Use in Nuclear Facilities,” Technical Report Series #122, Guidebook prepared under the auspices of the International Atomic Energy Authority, 1970.

5. WCAP-15613 (Proprietary) and WCAP-15706 (Non-Proprietary), “AP1000 PIRT and Scaling Assessment Report,” Revision 0, March 2001.

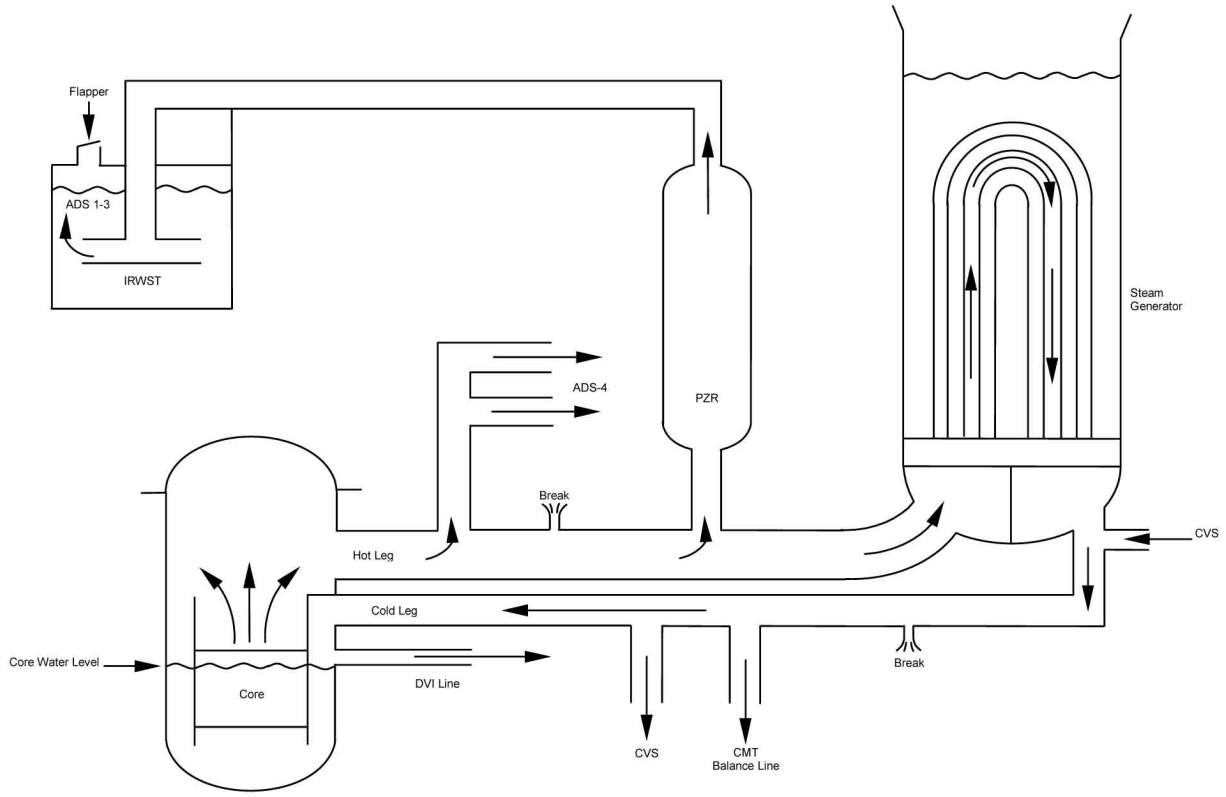

Figure 6A-1
RCS Release Locations

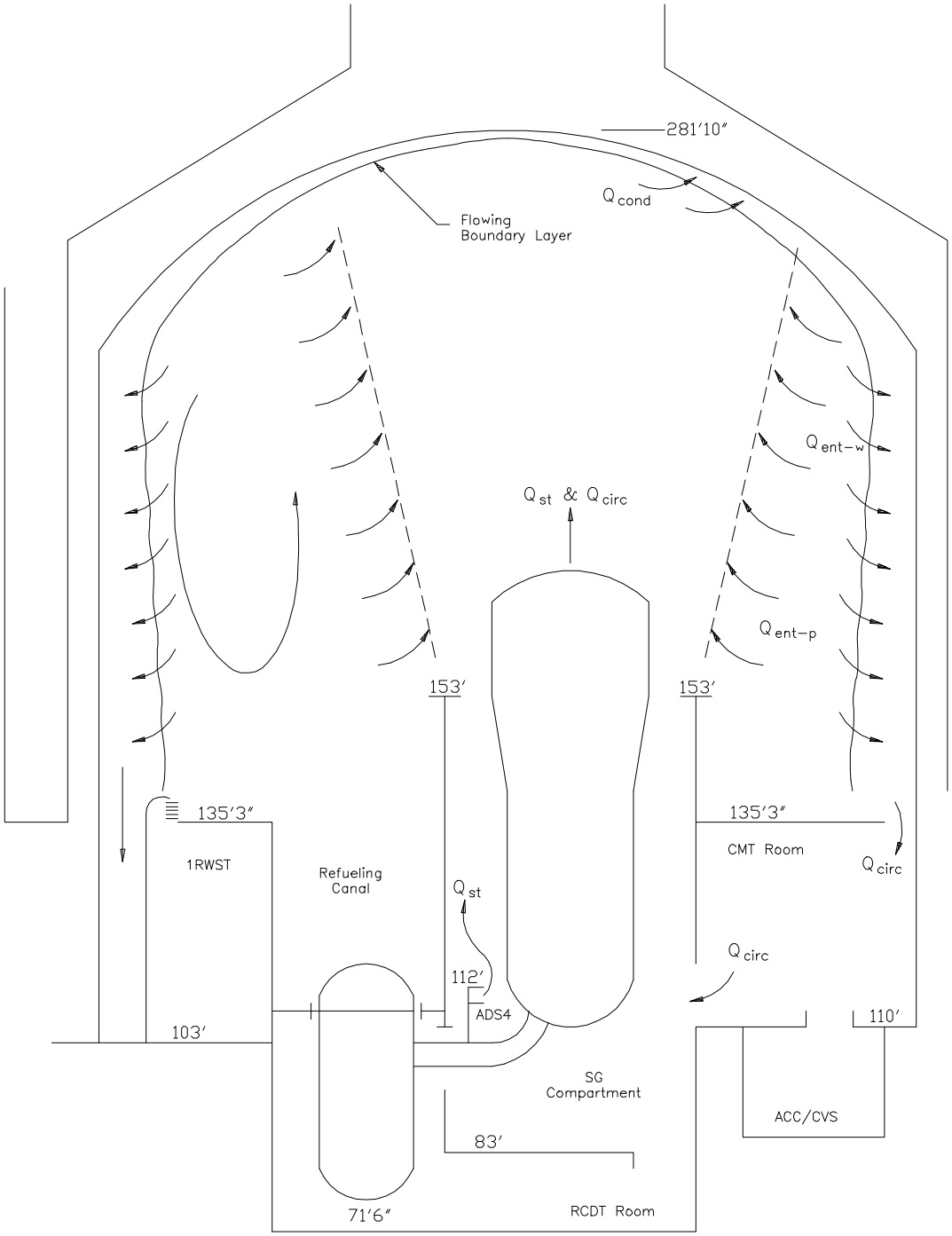

Figure 6A-2
Containment Natural Circulation