Appendix 3E High-Energy Piping in the Nuclear Island

This appendix identifies high-energy piping in the nuclear island with a diameter larger than 1 inch. Candidate leak-before-break piping is identified in Figures 3E-1 through 3E-5 along with other piping for which high-energy pipe failures are postulated. These figures also identify piping in the break exclusion zones inside and outside containment. These figures do not include piping of 1 inch size and smaller. Instrumentation and instrumentation lines are not included.

The selection of the failure type is based on whether the system is high or moderate energy during normal operating conditions of the system. High-energy piping includes those systems or portions of systems in which the maximum normal operating temperature exceeds 200°F or the maximum normal operating pressure exceeds 275 psig. Piping systems or portions of systems pressurized above atmospheric pressure during normal plant conditions and not identified as high energy are considered moderate energy. Piping systems that exceed 200°F or 275 psig for 2 percent or less of the time during which the system is in operation or that experience high-energy pressures or temperatures for less than 1 percent of the plant operation time are considered moderate energy. In piping whose nominal diameter is greater than 1 inch but less than 4 inches, only circumferential breaks are postulated at each selected location. No breaks are postulated for piping whose nominal diameter is 1 inch or less.

The three-letter code included in the line numbering identifies the pipe specification. The letters define the pressure class, material specification, and AP1000 equipment classification, respectively. The symbols used in Figures 3E-1 through 3E-5 are the same as the P&ID figures. See Figure 1.7-2 for additional information on the drawing legend and for the key for the pipe specification. Section 3.2 includes additional information on the AP1000 equipment classification.

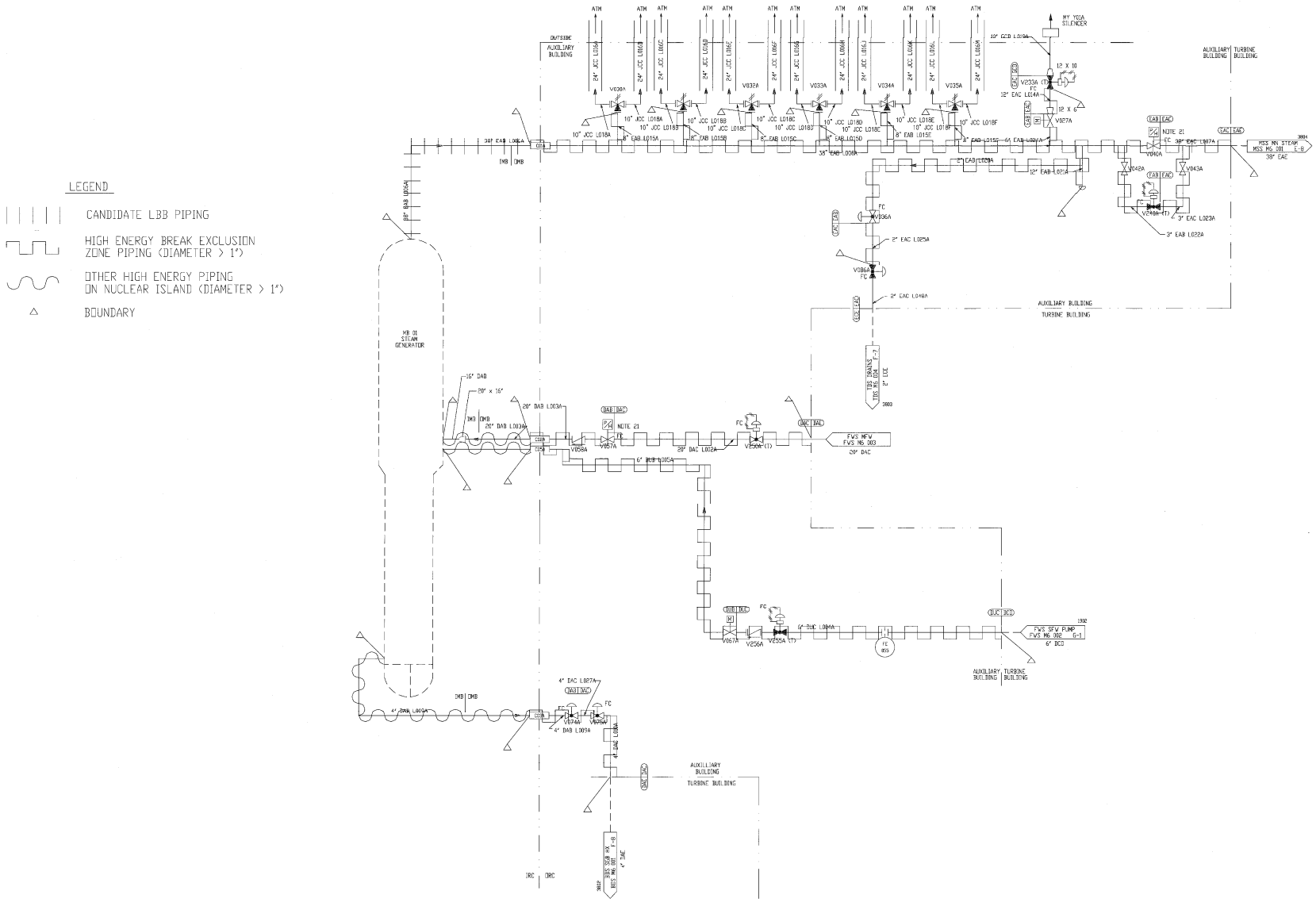

Figure 3E-1 (Sheet 1 of 2)
High Energy Piping – Steam Generator System

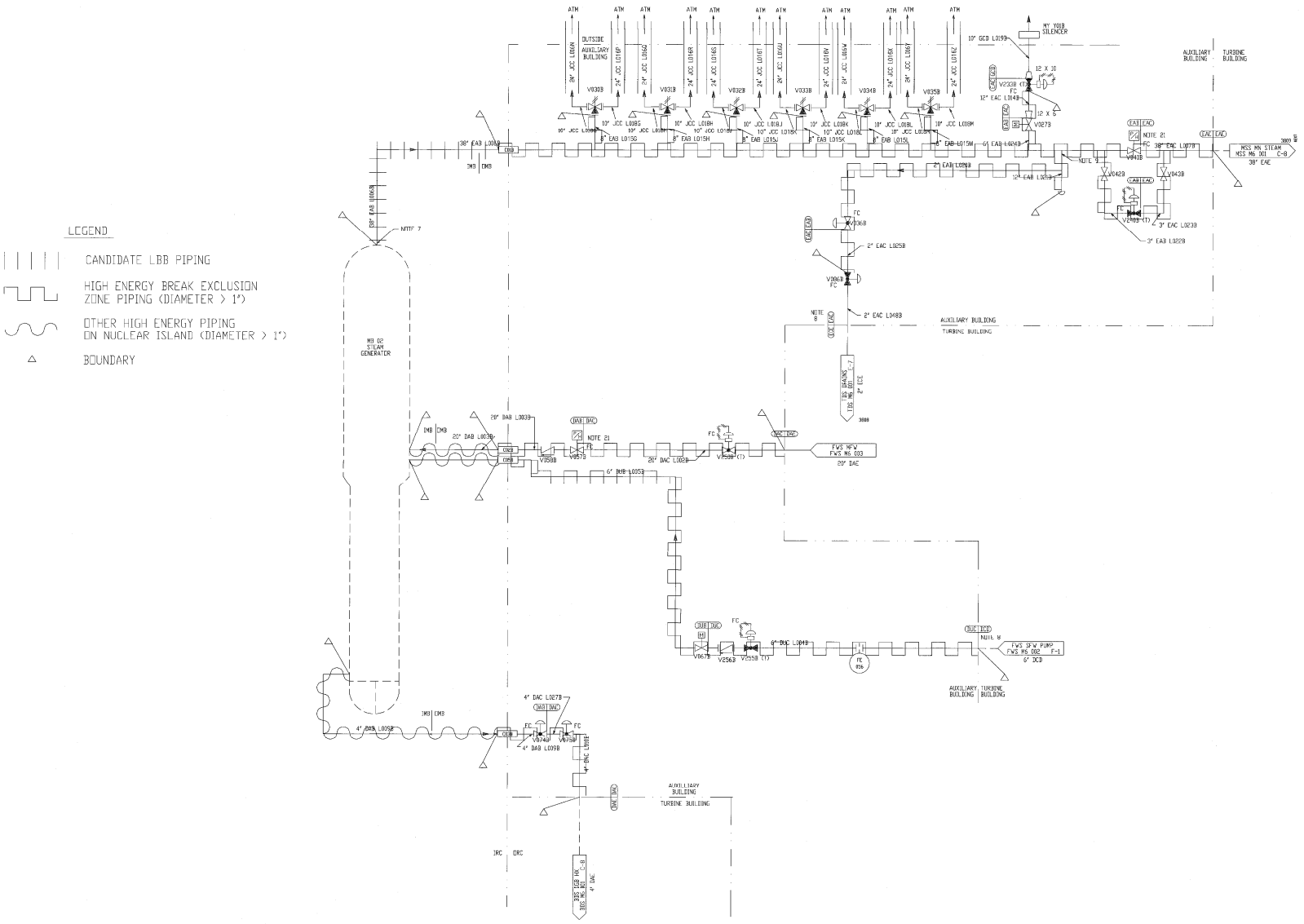

Figure 3E-1 (Sheet 2 of 2)
High Energy Piping – Steam Generator System

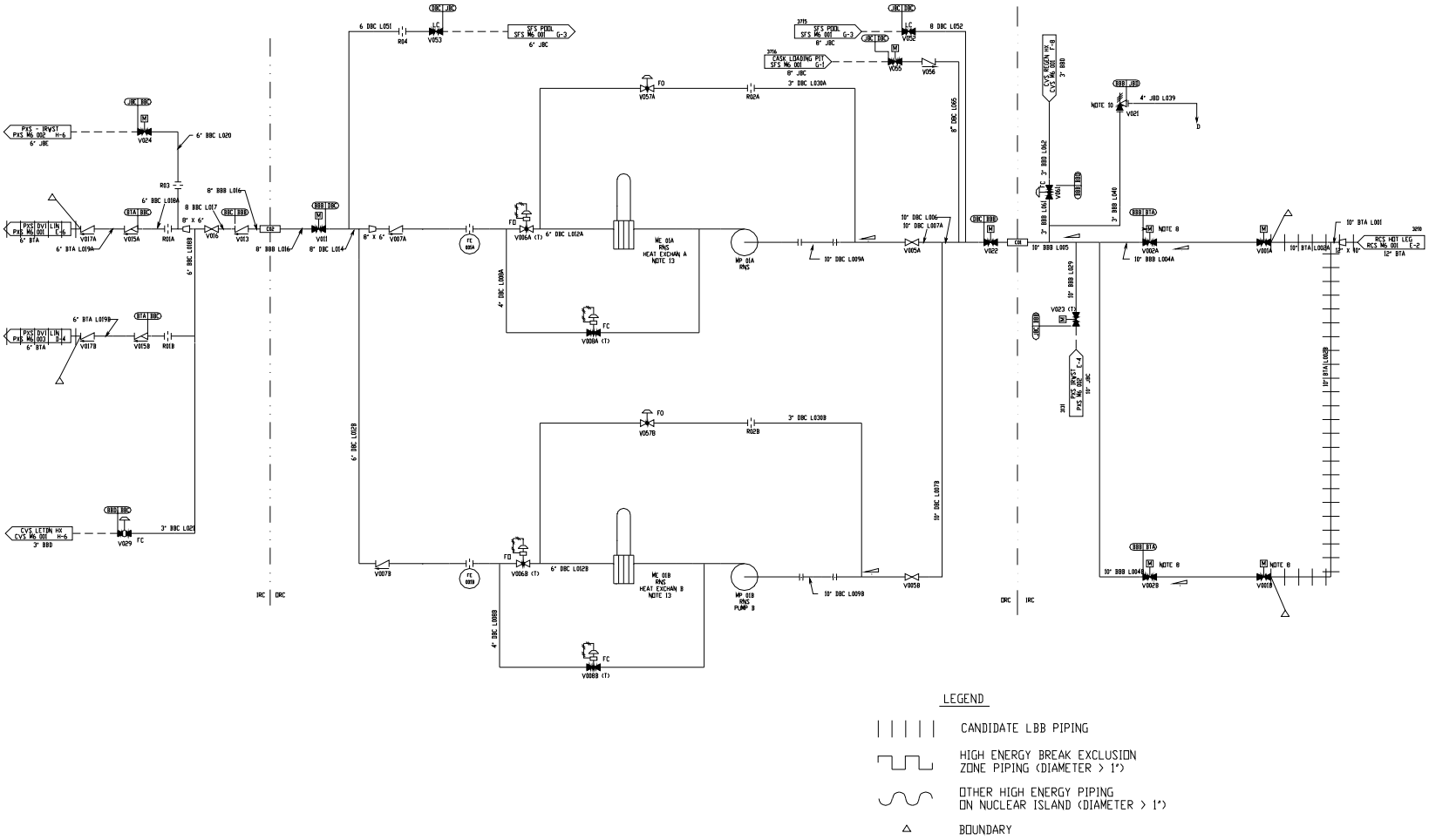

Figure 3E-2
High Energy Piping – Normal Residual Heat Removal System

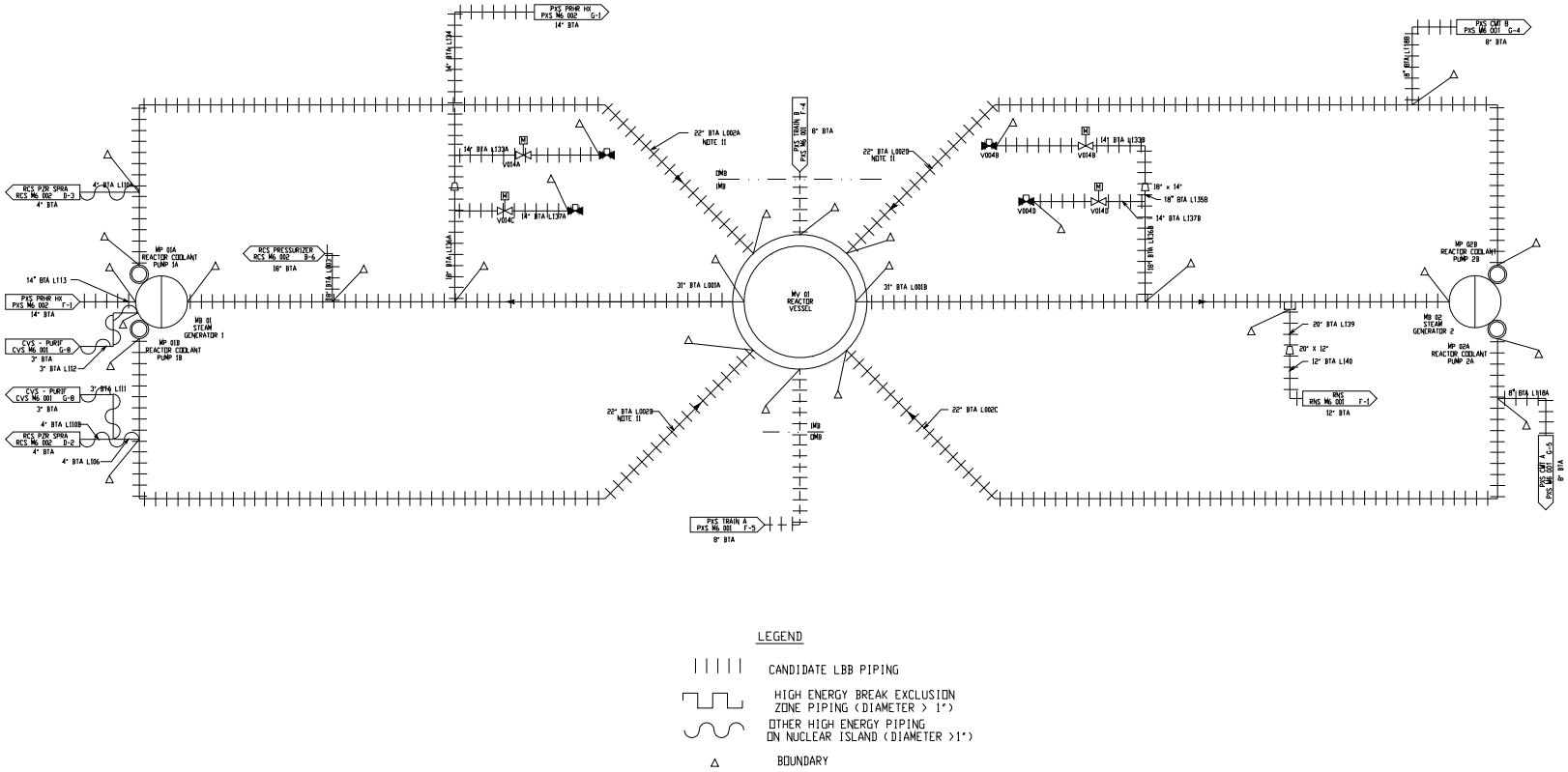

Figure 3E-3 (Sheet 1 of 2)
High Energy Piping – Reactor Coolant System

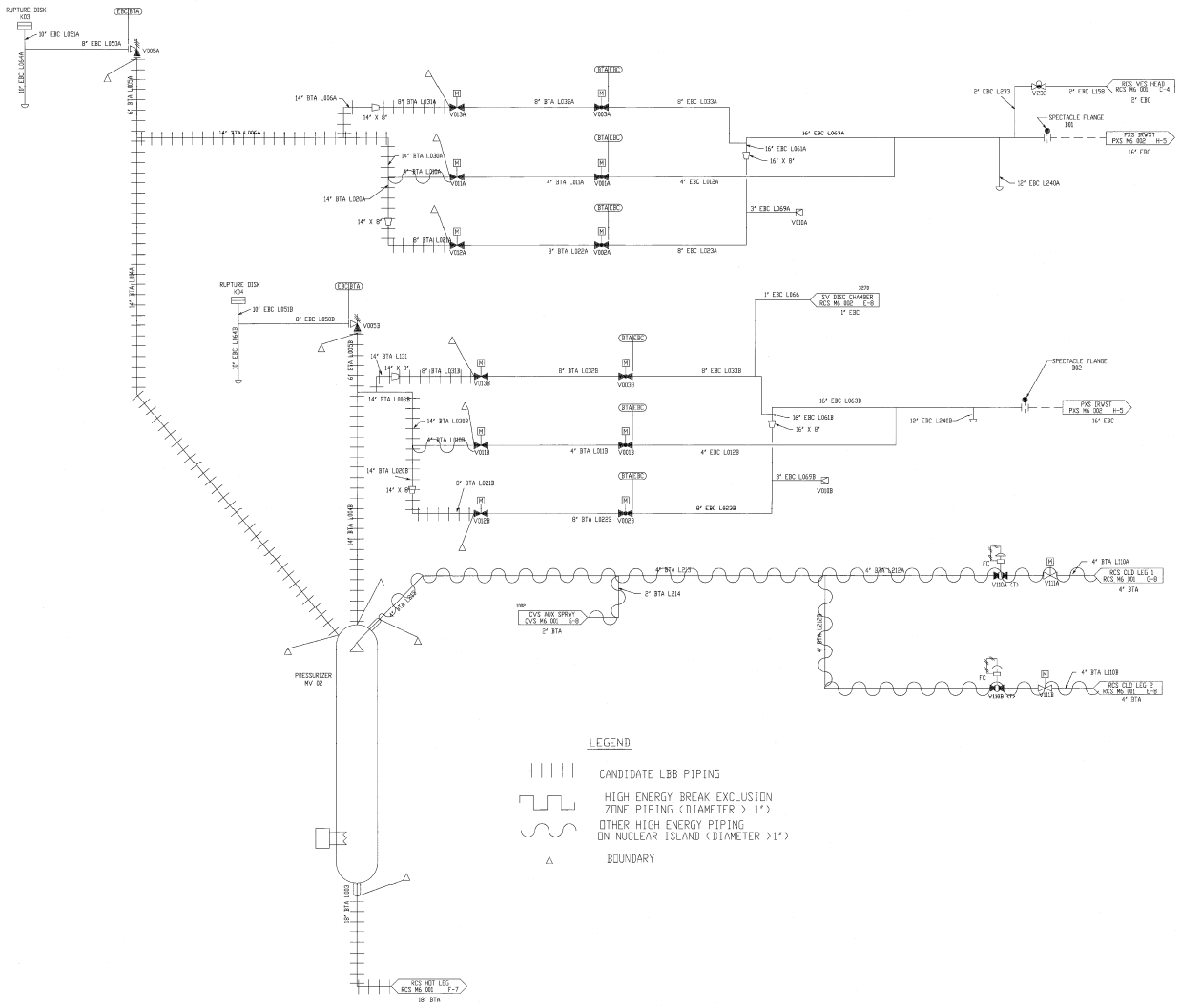

Figure 3E-3 (Sheet 2 of 2)
High Energy Piping – Reactor Coolant System

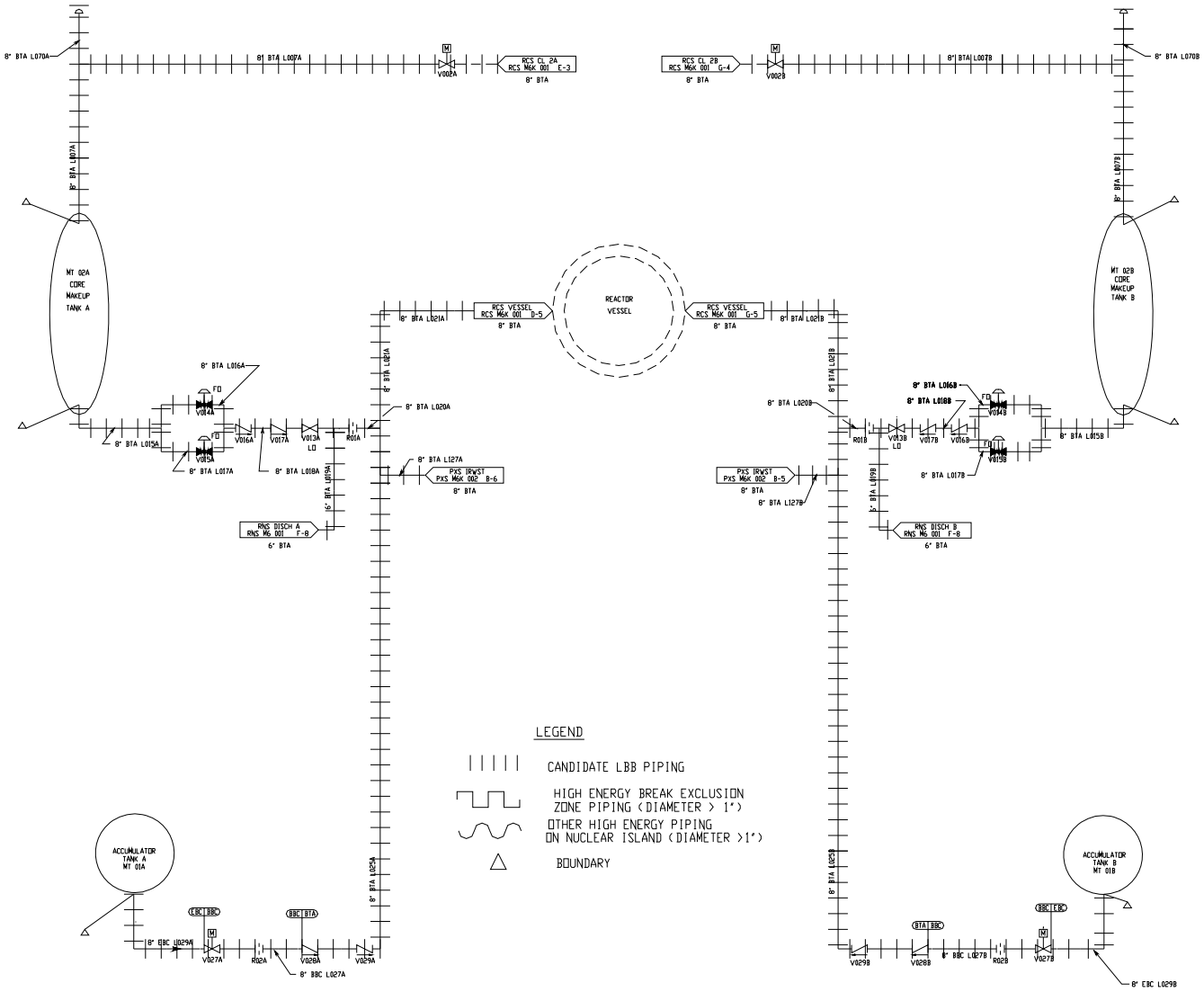

Figure 3E-4 (Sheet 1 of 2)
High Energy Piping – Passive Core Cooling System

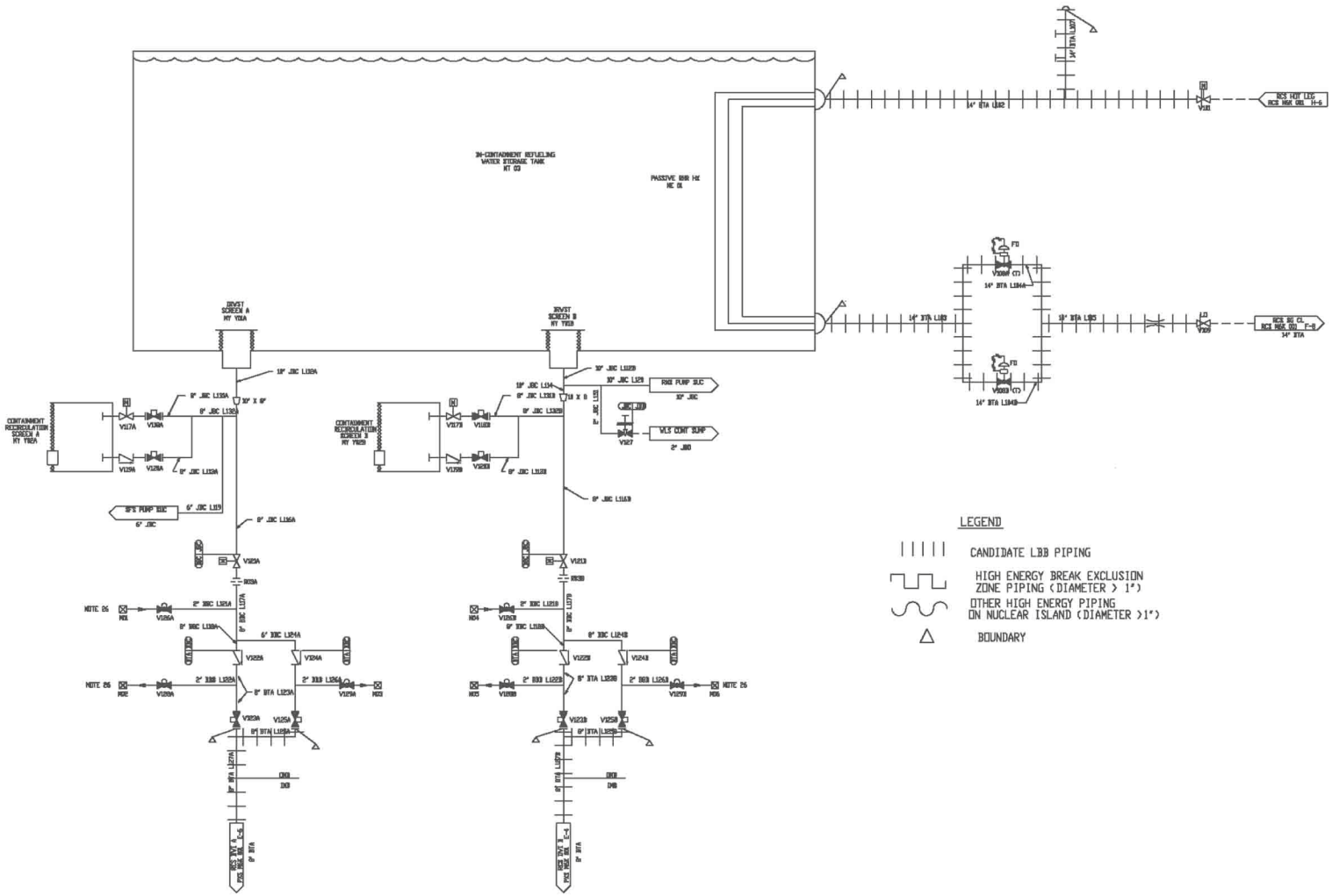

Figure 3E-4 (Sheet 2 of 2)
High Energy Piping – Passive Core Cooling System

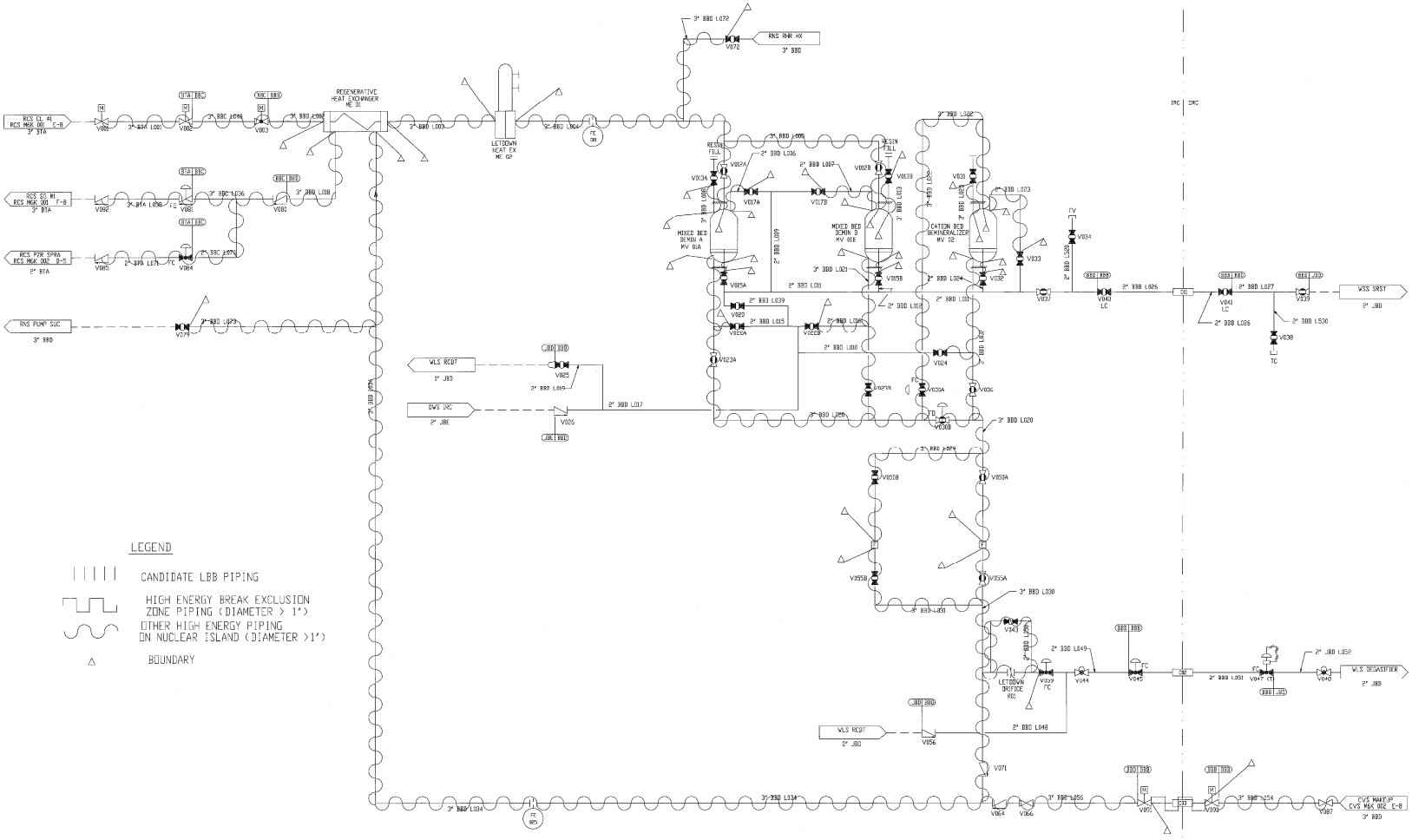

Figure 3E-5 (Sheet 1 of 2)
High Energy Piping – Chemical and Volume Control System

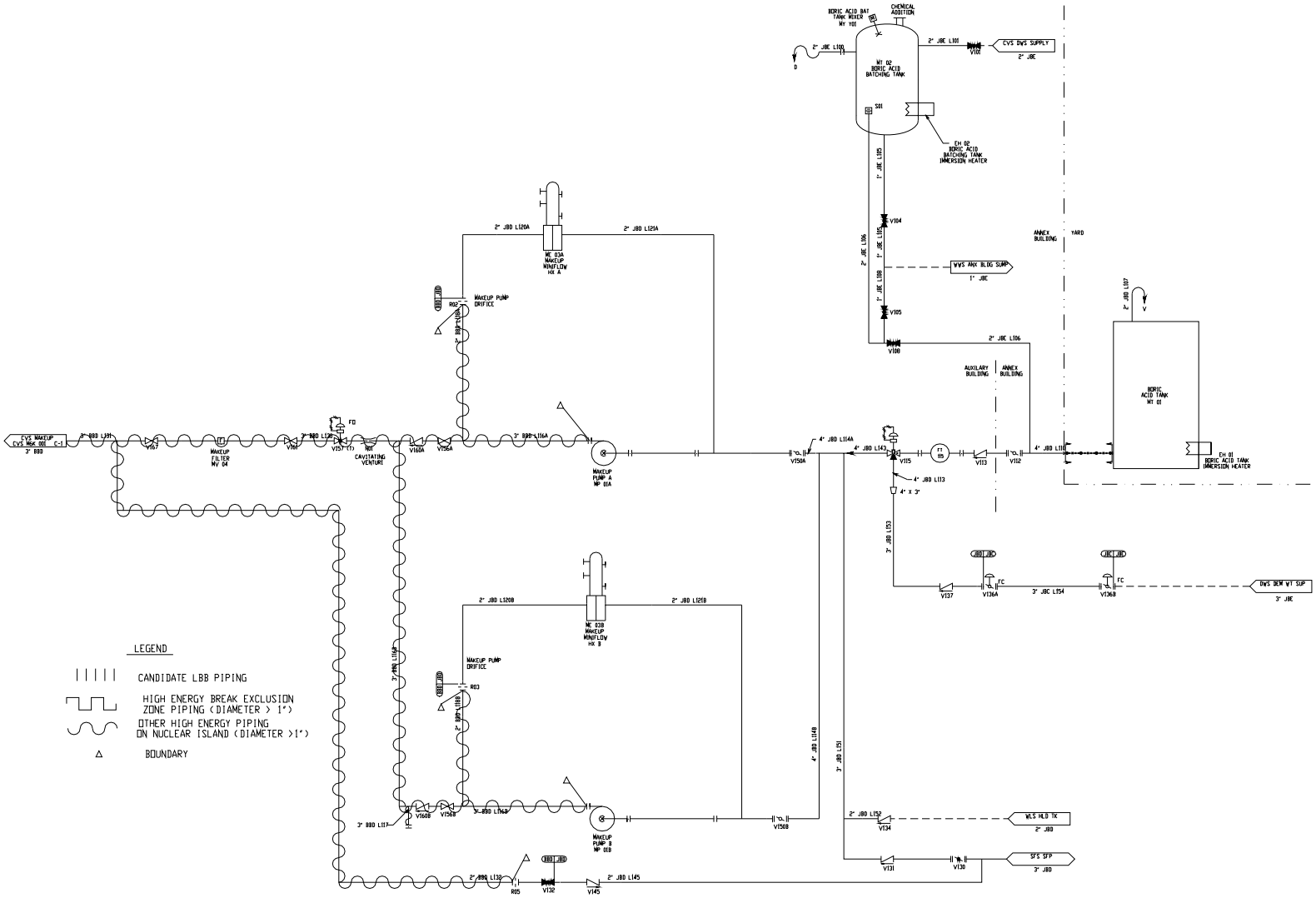

Figure 3E-5 (Sheet 2 of 2)
High Energy Piping – Chemical and Volume Control System