orano

Orano USA
Columbia Office
7135 Minstrel Way
Columbia, MD 21045
Tel: (410) 910-6900
@Orano_USA

December 14, 2018
E-52844

U. S. Nuclear Regulatory Commission
Attn: Document Control Desk
One White Flint North
11555 Rockville Pike
Rockville, MD 20852

Subject: Application for Revision 9 to Certificate of Compliance No. 9302, Response to Second Request for Additional Information, Docket No. 71-9302 and EPID-L-2018-LLA-0000

References:

[1] Letter dated September 26, 2018, from Pierre Saverot, NRC, to Glenn Mathues, Orano USA, "Second Request for Additional Information for Review of the Model No. NUHOMS® MP-197 Package."

[2] Letter E-52242, dated August 15, 2018, "Application for Revision 9 to Certificate of Compliance No. 9302, Request for Additional Information, Supplement for Clarification," Docket No. 71-9302 and EPID-L-2018-LLA-0000.

[3] Letter E-51664, dated June 27, 2018, "Application for Revision 9 to Certificate of Compliance No. 9302, Request for Additional Information," Docket No. 71-9302 and EPID-L-2018-LLA-0000.

[4] Letter dated May 11, 2018, from Pierre Saverot, NRC, to Glenn Mathues, TN Americas LLC, "Request for Additional Information for Review of the Model No. NUHOMS® MP-197 Package."

[5] Letter E-50408, dated February 28, 2018, "Application for Revision 9 to Certificate of Compliance No. 9302 for the Model No. NUHOMS®-MP197 Packaging," Docket No. 71-9302.

[6] Revision 8 to Certificate of Compliance No. 9302 for the Model No. NUHOMS®-MP197 Packaging.

[7] NUHOMS®-MP197 Transportation Package Safety Analysis Report, Revision 18, April 2017.

This submittal provides responses to the request for additional information (RAI) forwarded by the NRC letter [1] referenced above.

NMSS01
NMSS

This submittal contains the following enclosures:

- Enclosure 1 provides each RAI followed by a TN Americas LLC response.
- Enclosure 2 provides a listing of several changes to the NUHOMS®-MP197 SAR drawings.
- Enclosure 3 provides a discussion describing 2 NUHOMS®-MP197 SAR change items that are not related to the RAIs.
- Enclosure 4 provides a revised copy of the NUHOMS®-MP197 Transportation Package SAR, Revision 18D affected sections, specifically the Revision Log, Chapter A.1 (changed page only), Appendix A.1.4.9A, Appendix A.1.4.10 (changed pages only), Appendix A.2.13.5 (changed pages only), Appendix A.2.13.7 changed pages only), Appendix A.2.13.9 (changed pages only), Appendix A.2.13.14 (changed page only), Chapter A.5 (change pages only), Chapter A.7 (changed pages only), Chapter A.8 (changed pages only), and the revised drawings for Appendix A.1.4.10, resulting from the changes described in Enclosures 1 through 3. This enclosure is proprietary.
- Enclosure 5 provides a listing of the computer files associated with the RAI 5-1 response and a SAR change item discussed in Enclosure 3.
- Enclosure 6 provides the computer files associated with the RAI 5-1 response and a SAR change item discussed in Enclosure 3. This enclosure is proprietary.
- Enclosure 7 provides TN Calculation MP197HB-0525, Revision 0. This calculation is associated with the RAI 5-1 response. This enclosure is proprietary.
- Enclosure 8 provides a public version of Enclosure 4. This enclosure is non-proprietary.
- Enclosure 9 provides a markup of Revision 8 for Certificate of Compliance (CoC) No. 9302 (changed pages only) for the proposed changes discussed in Reference [5], as well as Enclosures 1 and 2.
- Enclosure 10 provides an affidavit, in accordance with 10 CFR 2.390, specifically requesting that proprietary information included in Enclosures 4, 6, and 7 of this submittal be withheld from public disclosure. That information may not be used for any purpose other than to support the review of the application for revision to the NUHOMS®-MP197 CoC.

The changed areas in the SAR are marked as follows:

- New or changed pages show "Revision 18D" in the header.
- Changed areas are indicated using revision bars and italicized text. The new changes associated with the RAI responses are further annotated either by a rectangular box enclosing the changed area or grey shading, and an indication of which RAI or enclosure is associated with the changes.

Based on communications with the NRC during the course of this licensing action, TN Americas LLC respectfully requests to be notified once the NRC has completed the technical review and determines that no additional information is required for issuance of the CoC. TN Americas LLC will then submit a consolidated Revision 19 to the NUHOMS®-MP197 SAR (both the proprietary and the non-proprietary versions), which incorporates all the changes completed during the course of this application for revision.

Should the NRC staff have any questions or require additional information to support review of this application, please contact Mr. Glenn Mathues by telephone at 410-910-6538, or by e-mail at Glenn.Mathues@areva.com. For any written correspondence, please include "To the Attention of Glenn A. Mathues" in the address.

Sincerely,

for W. Edwards per delegation

W. Scott Edwards
Director of Transportation
TN Americas LLC

cc: Pierre Saverot, U.S. Nuclear Regulatory Commission
- One paper copy of this transmittal letter
- One electronic copy of this transmittal letter and Enclosures 1 through 5, 7, 9, and 10 on four computer disks
- One computer disk containing Enclosure 6

Enclosures:

1. RAI Responses
2. NUHOMS®-MP197 SAR Drawing Changes
3. NUHOMS®-MP197Non-RAI SAR Changes
4. NUHOMS®-MP197 SAR, Revision 18D Changed Pages Only (Proprietary)
5. Listing of Computer Files Contained in Enclosure 6
6. Computer Files for Shielding (separate computer disk) (Proprietary)
7. Calculation MP197HB-0525, Revision 0 (Proprietary)
8. NUHOMS®-MP197 SAR, Revision 18D, Changed Pages Only (Non-Proprietary)
9. Proposed Changes to CoC 9302, Revision 8
10. Affidavit Pursuant to 10 CFR 2.390

AFFIDAVIT PURSUANT TO 10 CFR 2.390

TN Americas LLC)
State of Maryland) SS.
County of Howard)

I, Paul Oleyar, depose and say that I am a Vice President of TN Americas LLC, duly authorized to execute this affidavit, and have reviewed or caused to have reviewed the information that is identified as proprietary and referenced in the paragraph immediately below. I am submitting this affidavit in conformance with the provisions of 10 CFR 2.390 of the Commission's regulations for withholding this information.

The information for which proprietary treatment is sought meets the provisions of paragraph (a) (4) of Section 2.390 of the Commission's regulations. The information is contained in Enclosures 4, 6, and 7, as listed below:

- Enclosure 4 - Portions of chapters and appendices of the Safety Analysis Report (SAR) for the NUHOMS®-MP197, Revision 18D.
- Enclosure 6 – Computer Files
- Enclosure 7 - Calculation MP197HB-0525, Revision 0

These documents have been appropriately designated as proprietary.

I have personal knowledge of the criteria and procedures utilized by TN Americas LLC in designating information as a trade secret, privileged or as confidential commercial or financial information.

Pursuant to the provisions of paragraph (b) (4) of Section 2.390 of the Commission's regulations, the following is furnished for consideration by the Commission in determining whether the information sought to be withheld from public disclosure, included in the above referenced document, should be withheld.

1) The information sought to be withheld from public disclosure involves portions of the Model NUHOMS®-MP197 transportation packaging SAR, computer files, and calculations, all related to the design of the Model NUHOMS®-MP197 transportation packaging, which are owned and have been held in confidence by TN Americas LLC.

2) The information is of a type customarily held in confidence by TN Americas LLC, and not customarily disclosed to the public. TN Americas LLC has a rational basis for determining the types of information customarily held in confidence by it.

3) Public disclosure of the information is likely to cause substantial harm to the competitive position of TN Americas LLC, because the information is related to the design and analysis of the Model NUHOMS®-MP197 transportation packaging, the application of which provides a competitive economic advantage. The availability of such information to competitors would enable them to modify their product to better compete with TN Americas LLC, take marketing or other actions to improve their product's position, or impair the position of TN Americas LLC's product, and avoid the development of similar data and analyses in support of their processes, methods, or apparatus.

Further the deponent sayeth not.

Paul Oleyar
Vice President, TN Americas LLC

Subscribed and sworn before me this 12th day of December 2018.

Notary Public

My Commission Expires 10/16/19

RONDA JONES
NOTARY PUBLIC STATE OF MARYLAND
My Commission Expires October 16, 2019

Enclosure 1 to E-52844

RAI Responses

2.0 Materials Review

RAI 2-1

Justify that subcomponents 1 through 5 of Drawing No. NUHRWC-71-1001, Revision 3, should not be designated as Quality Category A upon considering (1) that the geometry of the radioactive waste container (RWC) and the volume occupied by the irradiated and/or contaminated hardware are specified in the MCNP shielding models, and (2) the assumption for the gamma shielding configuration in NUREG/CR-6407. Otherwise, revise Quality Categories as appropriate.

The geometry of the RWC is defined in the MCNP shielding models per the response to RAI 2-1 and Section A.5.3.1.3 of the application. Therefore, the structural performance of the RWC is necessary to ensure that these analyses remain valid, and a higher classification is warranted per NUREG/CR-6407 which states that: "*The shielding is usually enclosed by the inner and outer shells and, as a solid, is not subject to removal during normal conditions of transport. ... The requirements of a specific design may dictate that a higher category be assigned to gamma shielding in some circumstances.*" Therefore, the RWC must not be subject to reconfiguration, if it is to be designated as Quality Category B.

Unless an adequate justification is provided that the RWC's structural performance is not needed to ensure that the shielding analyses remain valid, designate subcomponents 1 through 5 of Drawing No. NUHRWC-71-1001, Revision 3, as Quality Category A.

The information is required by staff to determine compliance with 10 CFR 71.107(a).

TN Response to RAI 2-1

The structural performance of the RWC is described in the new Safety Analysis Report (SAR) Section A.2.13.7.4.6 of the application. SAR Sections A.1.4.9A and A.2.13.9, and Table A.1.4.9A-1 were also revised as a result of the addition of Section A.2.13.7.4.6. The structural adequacy of the RWC subcomponents and their welds satisfy the stress limits required by ASME B&PV Code, Section III, Subsection NF. Therefore, the structural performance of the RWC assumed for the MCNP shielding evaluation as described in Section A.5.3.1.3 of the application, is valid.

Based on the detailed structural evaluation provided in new Section A.2.13.7.4.6 of the application, the RWC is not subject to reconfiguration and the classification of the RWC components as Quality Category B is appropriate.

Drawing NUHRWC-71-1001 was revised to include the information relevant to the analysis performed in SAR Sections A.2.13.7.4.6.

Impact

SAR Sections A.1.4.9.A and A.2.13.9 were revised as described in the response.

SAR Table A.1.4.9A-1 was revised as described in the response.

SAR Section A.2.13.7.4.6 was added as described in the response.

SAR Drawing NUHRWC-71-1001 was revised as described in the response.

RAI 2-2

Justify the recategorization of the siphon and vent port cover plate from Quality Category A (per Drawing No NUHRWC-71-1001, Revision 1) to not-important-to-safety (NITS) (per Drawing No NUHRWC-71-1001, Revision 3). Justify the removal of all quality assurance requirements for the RWC's grapple ring and grapple ring support: such subcomponents were revised from Quality Category C (per Drawing No NUHRWC-71-1001, Revision 1) to NITS (per Drawing No NUHRWC-71-1001, Revision 3).

The applicant states that "The level of detail provided in the previously approved drawings (12 sheets) for features of the RWC that are not important to safety is not required for the technical evaluations, and many of the features of the design are common to the RWC-W, RWC-B, and RWC-DD. Furthermore, the RWC internals described in the previously-approved Drawing NUHRWC-71-1002, Revision 1 are not needed for the purpose of the safety analysis, and the bolted closure design described in the previously-approved Drawing NUHRWC-71-1003, Revision 0 has been brought into Drawing NUHRWC-71-1001." However, the applicant did not provide a justification for the recategorization of the siphon and vent port cover plate from Quality Category A to not-important-to-safety (NITS) nor did it justify the downgrading of the RWC's grapple ring and grapple ring support from Quality Category C to NITS.

The information is required by staff to determine compliance with 10 CFR 71.107(a).

TN Response to RAI 2-2

None of these design features (siphon and vent port cover plate, or grapple ring and grapple ring support) for configuration options RWC-W, RWC-B, and RWC-DD as described in the MP197HB, is considered important for the structural, thermal, containment, or shielding performance of the package design. Therefore, no leak-tightness criterion is required for the RWC for transportation (see SAR Appendix A.7.7.10).

Two different port closure designs are used to seal these penetrations: One design for the RWC-W and RWC-B uses a small, approximately quarter-inch thick circular cover plate (typically called 'siphon and vent ports cover plate') welded over these penetrations, and the other design for the RWC-DD uses a small threaded plug that is screwed into the penetrations. The two port closure configurations are shown in Figures 2-2.1and 2-2.2 below.

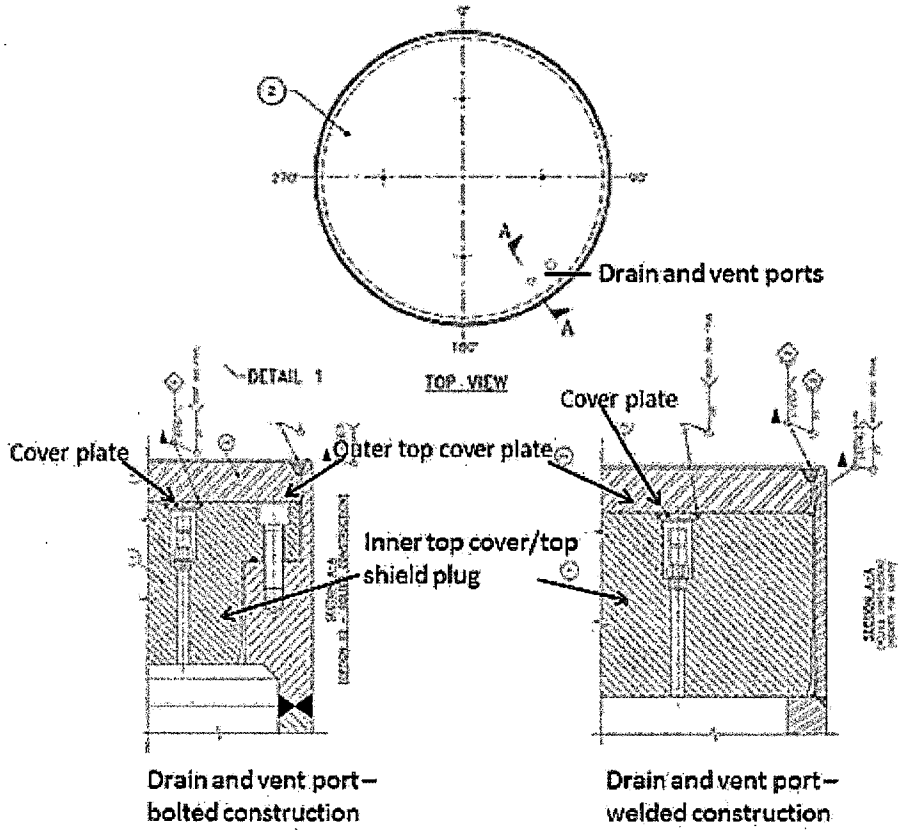

Figure 2-2.1–RWC-W and RWC-B

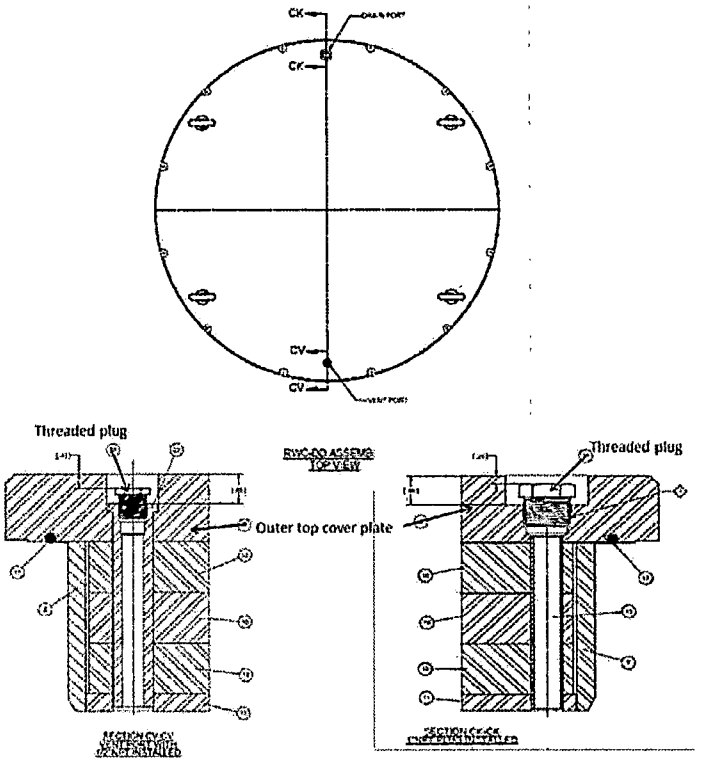

Figure 2-2.2–RWC-DD

The discussion below applies to either port closure design, regardless of whether the design is a welded cover plate or threaded plug.

There is no leak-tightness criterion for containment that is required of the RWC for transportation (see SAR Appendix A.7.7.10). The drain and vent ports are also too small to have a significant effect on shielding effectiveness for the RWC radioactive contents. However, these closures may function to keep small debris inside the RWC as assumed for the shielding analysis. The RWC-W and RWC-B designs both have an outer top cover plate that is seal-welded prior to shipment, whereas the outer top cover plate is integral to the closure lid for the RWC-DD design, and the vent and drain ports penetrate the outer top cover plate. The function of retaining any contents debris within the RWC shell is provided by the threaded plug for the RWC-DD and by both the welded cover plate, and welded outer top cover plate for the RWC-B and RWC-B. Quality Category B is appropriate for the cover plate and threaded plug as both can be considered safety features that keep contents debris inside the RWC where shielding is provided by the RWC.

Drawing NUHRWC-71-1001 was revised to include the grapple ring assembly and its quality category classification as Quality Category C.

Drawing NUHRWC-71-1001 was also revised as described in the response to include details of the vent and drain ports with a quality classification as Quality Category B for the threaded plug and cover plate.

Impact

Drawing NUHRWC-71-1001 was revised as described in the response.

RAI 2-3

Revise Drawing No NUHRWC-71-1001, Revision 3, to incorporate the weld requirements (procedures, inspections, welder qualifications) for the fabrication of RWCs, as defined in Section A.1.4.9A of the application. Otherwise, justify the exclusion of weld requirements for drawing NUHRWC-71-1001, Revision 3, in light of the response to RAI 2-1 above.

The response to RAI 2-2, dated May 11, 2018, is inadequate since the quality/safety categorization of Drawing NUHRWC-71-1001, Revision 3, has not been properly justified. If the RWC configuration has been assumed in the shielding safety analyses (per your response to RAI 2-1), then the drawing should identify the weld requirements that ensure its adequate structural performance.

The information is required by staff to determine compliance with 10 CFR 71.107(a).

TN Response to RAI 2-3

Drawing NUHRWC-71-1001 was revised to Revision 4 to incorporate the fabrication and weld details required for the fabrication of the RWCs, as provided in Section A.1.4.9A of the application.

In addition, consistent with the response to RAI 2-1, SAR Sections A.1.4.9A and A.2.13.9 were revised, and Section A.2.13.7.4.6 was added to the application to demonstrate that the structural performance of the RWC is consistent with the quality/safety categorization as provided on revised drawings. SAR Table A.1.4.9A-1 was revised as a result of the addition of SAR Section A.2.13.7.4.6

Impact

Drawing NUHRWC-71-1001 was revised as described in the response.

RAI 2-4

Revise, as appropriate, the design basis drawings for the primary containment subcomponents to identify the nominal O-ring groove dimensions for seal contact surfaces, along with the corresponding tolerances. Justify these nominal dimensions and their tolerances per the assumptions in the containment safety analyses.

The responses to RAI 2-3 and RAI 4-1, dated May 11, 2018, are inadequate. The applicant incorporated reference dimensions for the O-ring groove dimensions to allow flexibility for future changes. In accordance with Interim Staff Guidance (ISG)-20, the staff shall verify that the drawings for the package show the seal surface and O-ring groove details, including among other, groove dimensions within strict tolerances.

The staff does not consider that the use of reference dimensions is appropriate for containment-related seals. In addition, per ASME Y14.5-2009, "Dimensioning and Tolerancing," a reference dimension is used for informational purposes only, is considered auxiliary information and does not govern production or inspection operations. The containment-related features of the package are not consistent with the definition of reference dimensions per ASME Y14.5-2009.

This information is required by staff to determine compliance with 10 CFR 71.71(c)(7), (c)(8) and 71.73(c)(1).

TN Response to RAI 2-4

Details T1 and T2 on Drawing MP197HB-71-1005 and details D and G on Drawing MP197HB-71-1006 were revised to identify the nominal O-ring groove dimensions for seal contact surfaces along with the corresponding tolerances.

The grooves dimensions that are the most important for the safety of the package are:

- Depth (for both elastomer and metallic seals), because the groove depth is directly related to seal compression; therefore, the groove depths are now provided either as a hard dimension with a tight tolerance (detail T1 of drawing MP197HB-71-1005), or as a tight range (detail G of Drawing MP197HB-71-1005 has been reinstated to its previous hard-dimensioned range for groove depth).
- Mean diameter (for elastomer seals only), because it is important for the groove diameter to match the seal diameter to avoid stretching the seal, which would result in a loss of compression/squeeze of the seal inside its groove; therefore, the groove mean diameters are now provided as hard dimensions (details T2 and D), with a ±0.050-inch tolerance: such a tolerance would result in a maximum elongation of ~0.2% for the smallest seal of the set (2-472), which is very small and would not result in a significant loss of seal squeeze.

The rest of the dimensions that define the O-ring groove shape shown on detail G of Drawing MP197HB-71-1006, which are also important to ensure proper seal behavior, have also been reinstated as hard dimensions. However, they are not quite as important as the groove depth mentioned above because they only affect the seal compression indirectly, therefore the tolerance on the groove opening (which is a range of .231/.235 equivalent to a tolerance of ±0.002 inch) was slightly relaxed to a tolerance of ±0.004 inch (which is still very tight) to 0.229/0.237.

Note that for a metallic seal, groove inner and outer diameters are only relevant for fabrication and assembly; they are simply sized to fit the seal but their size has no bearing on the physical characteristics of the seal such as squeeze or compression values, they are not relevant to the safety analysis of the package, because as long as the groove has the depth recommended by the manufacturer for the specified seal to ensure the seal is properly crushed (see above), the seal will perform its function. Therefore, these dimensions are left as reference dimensions on detail T1 of drawing MP197HB-71-1005.

The seals dimensions themselves, including tolerances, are per the manufacturer's specifications. Therefore, these dimensions are also left as reference dimensions on detail T1 of drawing MP197HB-71-1005.

Impact

Drawings MP197HB-71-1005 and MP197HB-71-1006 were revised as described in the response.

5.0 Shielding Evaluation

RAI 5-1

Define the contents for the RWC and justify that the source assumed within the shielding analysis is bounding.

Section A.1.4.9A.3 of the application states that: "*The quantity of radioactive material is limited to a maximum of 8,182 A_2. This is equivalent to 90,000 Ci of cobalt-60 with a total energy release equivalent of 225,000 MeV/sec. The radioactive material is typically in the form of neutron activated metals, or metal oxides in solid form. Surface contamination may also be present on the irradiated components.*"

Although the staff finds that Co-60 is the most significant contributor to the external dose rate, contributions from other nuclides are not addressed in this evaluation. The staff's experience with other activated steel analysis with a relatively short decay time (less than 1 year) show that other short-lived radionuclides with significant gammas can also have some contribution to external dose rates (such as Fe-59, Co-58, and Mn-54). Although these nuclides are still a minor contributor compared to Co-60, characterizing activated steel only by Co-60 would neglect these other nuclides.

This information is required by staff to determine compliance with 10 CFR 71.47 and 71.51.

TN Response to RAI 5-1

Section A.1.4.9A.2 of Chapter A.1 and Section A.7.1 of Chapter A.7 of the Safety Analysis Report (SAR) were revised to address this question.

A new analysis was added in Section A.5.2.1.5 of Chapter A.5, which calculates the equivalent activity limits as a function of energy for gamma emission from 0.6-10 MeV.

Energy-dependent activities are developed using the 18-energy-group response functions calculated at the limiting location, radial at 2 meters from the side of the impact limiters per Table A.5-34. Assumptions associated with the Monte Carlo N-Particle (MCNP) model are identical to those employed for calculating the dose rates shown in Table A.5-34, in particular the source is uniformly distributed throughout an assumed waste volume with a 66.0-inch diameter and a 168-inch height, and the density of the source material is 1.0 g/cc. Note that the response functions are developed with one angular bin, circumferential average tally, while dose rates reported in Table A.5-34 of Chapter A.5 were computed with 71 angular bins; this results in a dose rate 2 meters from the side of the impact limiters of 7.71 mrem/hr for 90,000 Ci of Co-60 as opposed to 8.33 mrem/hr shown in SAR Table A.5-34.

Equivalent activity limits per gamma energy emissions are determined using the response functions per gamma energy and the dose rate 2 meters from the side of the impact limiters of 7.71 mrem/hr for 90,000 Ci of Co-60, as shown in Table RAI 5-1-1.

Table RAI 5-1-1: Activity Limits as a Function of Energy

Energy (MeV)	Response (mrem/h/γ/s)	Relative Uncertainty	Activity (γ/s)	Dose Rate (mrem/h)	Equivalent Activity (γ/s) (2)
0.6	7.98E-20	0.008			9.66E+19
0.8	7.61E-18	0.070			1.01E+18
1	1.17E-16	0.027			6.58E+16
1.1732	5.78E-16	0.014	3.33E+15(1)	1.93E+00	1.33E+16
1.3325	1.74E-15	0.009	3.33E+15(1)	5.78E+00	4.44E+15
1.5	4.19E-15	0.007			1.84E+15
1.75	1.11E-14	0.005			6.92E+14
2	2.27E-14	0.004			3.39E+14
2.5	6.05E-14	0.003			1.27E+14
3	1.13E-13	0.003			6.83E+13
3.5	1.72E-13	0.003			4.47E+13
4	2.29E-13	0.003			3.36E+13
4.5	2.85E-13	0.003			2.71E+13
5	3.27E-13	0.003			2.36E+13
6	3.96E-13	0.003			1.95E+13
8	4.65E-13	0.003			1.66E+13
10	4.96E-13	0.003			1.55E+13
Total Dose Rate:				7.71	

(1) Activity limit corresponding to 90,000 Ci of Co-60 resulting in 7.71 mrem/hr (using response functions at 1.1732 MeV and 1.3325 MeV).
(2) Equivalent activity limits per energy for contents other than Co-60 determined using 7.71 mrem/hr and response functions at energy groups shown in the first column. Equivalent Activity (i) = 7.71 / Response function at Energy (i).

Note that a significant reduction in activity is observed for emitters with gamma energy higher than Co-60 gammas. This is consistent with the attenuation ability of materials for gamma rays. Higher source energies require more material for equivalent shielding.

The allowed content in the MP197HB RWC is 90,000 Ci of Co-60; the following Equation (1) applies for contents other than Co-60, and the activity limits are determined in the last column of Table RAI 5-1-1. For a given isotope, the gamma emitting energy is rounded up to the next higher energy bin shown in Table RAI 5-1-1.

$$\sum_i \frac{S_i(E)}{ActivityLimit_i(E)} \leq 1 \qquad (1)$$

For example, for a content of Co-60 and Cs-137 mixture, the allowed activities of Co-60 and Cs-137 are defined as:

$$\gamma_{Co\text{-}60} / 1.33\text{x}10^{16} + \gamma_{Co\text{-}60} / 4.44\text{x}10^{15} + \gamma_{Cs\text{-}137} / 1.01\text{x}10^{18} \leq 1$$

Where,

$\gamma_{Co\text{-}60}$ is the activity of Co-60, and

$\gamma_{Cs\text{-}137}$ is the activity of Cs-137

Table RAI 5-1-1 was added to Chapter A.5 as Table A.5-61 and a condensed version of Table A.5-61, along with two example content characterization calculations, is included in Chapter A.7 (Table A.7-2c). A statement was added to Section A.1.4.9A.2 directing licensees to Chapter A.7, Table A.7-2c. Full compliance with regulatory dose rates is demonstrated.

Chapter A.7, "Operating Instructions," provides the energy-dependent activity limits and criteria for the sum of fractional activities. Activities for individual radionuclides are determined during characterization of actual contents used to classify the waste for land disposal of radioactive waste (10 CFR Part 61). Detailed procedures for verifying the contents for the purpose of compliance with radioactive material transportation requirements are implemented in an operations manual provided to package users. These procedures use the characterization data to determine the total activity in each of the energy groups using the primary gamma emission energies and probabilities for each of the radionuclides. Gamma energies and decay schemes can be found in the National Nuclear Data Center (NNDC) Chart of Nuclides, which can be found at http://www.nndc.bnl.gov/chart/chartNuc.jsp. The fractions of activity limit for each gamma emitter are summed, and the sum of the fractions of total activity shall not exceed 1.0.

The maximum allowable RWC content is reduced from 90,000 Ci to 70,000 Ci for the MP197HB Unit 01 due to a localized reduced lead thickness condition following lead pouring. Equivalent activity limits per gamma are determined similarly using the response functions per gamma energy, with a uniform reduced lead thickness of 2.77 inches, and a dose rate at 2 meters from the side of the impact limiters of 8.71 mrem/hr for 70,000 Ci of Co-60. Equivalent activity limits per gamma are shown in new Table A.5-62 of Chapter A.5. A condensed version of Table A.5-62, along with two example content characterization calculations, is included in Chapter A.7 (Table A.7-2d). A statement was added to Section A.1.4.9A.2 directing licensees to Chapter A.7, Table A.7-2d, when loading with MP197HB Unit 01.

Impact

SAR Sections A.1.4.9A, A.5, and A.7 were revised as described in the response.

SAR Tables A.5-61, A.5-62, A.7-2c and A.7-2d were added as described in the response.

Enclosure 2 to E-52844

NUHOMS®-MP197 SAR Drawing Changes

NUHOMS® MP197 Safety Analysis Report (SAR) Drawing Changes

TN Americas LLC (TN) is requesting changes to the NUHOMS® MP197 SAR drawings, which are not related to the RAI questions. However, several of the specific drawing changes were the direct result of an RAI response as detailed in Enclosure 1, and are provided here as additional information.

The engineering drawings in the SAR provide details that affect the evaluation of the package design. The changes to the drawings submitted in the original application were intended to remove excessive detail that may not be appropriate for a condition of approval; however, as requested, the details have been reinstated in the drawings where appropriate. Continuing review of the design drawings during the ongoing fabrication of the cask has identified additional changes to details that were included in the SAR drawings. These changes are included in the response to the request for additional information, and were assessed to verify that the change to design features shown on the SAR drawing had no effect on the containment, shielding, thermal, and structural evaluations for the package design. The technical content provided is considered appropriate for these drawings submitted in the package application.

The requested changes are discussed by SAR drawing number in this enclosure and include a description of the change, the justification and the relation of the change to any impact to the safety analysis. The abbreviation "DCR" refers to a Design Change Request, which is a TN document used for controlling design changes for systems, structures or components subject to the requirements of 10 CFR Part 71.

1. MP197HB-71-1001, Sheet 2, G-8: make the R54.88 outer strap radius a reference dimension. This is needed because the transport skid shown on the SAR drawings is for illustration purposes only and does not reflect the actual skid that will be used for transportation; the transport skid is not part of the SAR safety analysis. Therefore, all skid dimensions must be shown as reference dimensions, for information only, and this change has no impact on the safety analysis.
2. MP197HB-71-1002, Sheet 1, Item 23K: change "BMG" to "BMN" in the materials specification. This is to correct a typographical error in the material specification and it has no impact on the safety analysis.
3. MP197HB-71-1002, Sheet 1, Items 23T and 23V: change "304N" to "304" in the materials description. This change is to be consistent with the safety analysis, which only specifies and uses the mechanical properties of type "304" material, and it, therefore, has no impact on the safety analysis.
4. MP197HB-71-1002, Sheet 1, Item 36: change quantity to "A/R" because the number of screws used to hold the metallic seal in place may vary from one supplier to the other. This change has no impact on the design and safety analysis of the package; the screws serve no safety function; their only purpose is to hold the metallic seal in place during operations.
5. MP197HB-71-1002, Sheet 2, Item 59: DCR 1001190 split Item 59 into Items 59A and 59B (because two different screw lengths are required for the impact limiter thermal shield); therefore, the Parts List of the SAR drawing is updated to reflect this change. The quantity for these items was changed to "A/R". This change has no impact on the design and safety analysis of the package as these items are not important-to-safety (NITS) and not part of the safety evaluation. Their purpose ends once the impact limiters fitted with their thermal shields have been installed on the cask.

6. MP197HB-71-1002, Sheet 2, Item 60: remove the "3A" thread tolerance class specified for the port bolts; this information is below the level of detail required in the SAR, and therefore removing it has no impact on the safety analysis.
7. MP197HB-71-1004, E-4: change "neutron shield length" to "neutron shield shell length". This change is only a clarification and has no impact on the safety analysis.
8. MP197HB-71-1005, Sheet 1, view M-M (D-4): make the 12.06 dimension a reference dimension. This is to be consistent with the design drawing. This dimension is not used in the safety analysis, and therefore this change does not impact the analysis.
9. MP197HB-71-1005, Sheet 1, E-2: remove "maximum diameter is 3 inches" in Note 5 and the size of the groove in the ports bolts in Note 8. This is to remove fabrication details from the drawing that have no relevance to (and do not impact) the safety analysis.
10. MP197HB-71-1005, Sheet 1, Section E-E (H-1):
    a) Move "PT" below the line (editorial correction).
    b) Show and dimension the longitudinal thermal expansion gap between the neutron shield and the neutron shield shell (per DCR NUH09-047). The maximum total cold gap is to be 0.89 inch. Clarify in the callout or in an additional note that this is a thermal expansion gap. This gap ensures that the neutron shielding resin, which has a coefficient of thermal expansion much higher than that of steel, will not subject the neutron shield shell to stresses due to thermal expansion during operations of the package.

Impact on Design (for item b above only):

- The total temperature variation considered is from 70 °F to 290 °F (per SAR Revision 18 Table A.3-11, volumetric average temperature at hottest cross section).
- The mean coefficient of thermal expansion for aluminum is 13.3E-06 in/in/F at 290°F (reference ASME 2008 edition Section II Part D Table TE-2).
- The mean coefficient of thermal expansion for Vyal B is 28.1 E-06 in/in/F (41 in/in/K from 25 °C to 126 °C and 109 in/in/K above 126 °C per "Development of Neutron Shielding Materials for High Burn Up Nuclear Fuel Storage Facilities", Herve Issard, TN International).
- The mean coefficient of thermal expansion for austenitic stainless steel is 9.2E-06 in/in/F from 70 °F to 290 °F (Reference ASME 2008 Edition Section II Part D Table TE-1).
- The gap at 70 °F (assumed fabrication/inspection temperature condition) required to accommodate expansion up to the maximum neutron shielding material temperature under normal conditions of transport over 154.25 inches (distance between end caps) is:

  (154.25)(290F – 70F)(28.1E-06 – 9.2E-06) = 0.64 inch for the Vyal B;

  (154.25)(290F – 70F)(13.3E-06 – 9.2E-06) = 0.14 inch for the aluminum tubes.

Therefore, a 0.64-inch minimum gap assures completely free expansion of both the aluminum boxes and the Vyal B neutron shielding material. An additional 0.25-inch

positive tolerance provides a reasonable manufacturing tolerance. This results in a 0.64+0.25=0.89-inch maximum cold thermal expansion gap.

11. MP197HB-71-1005, Sheet 2, D-8: change the diameter of the smaller shoulder of the double shoulder trunnion to 9.74 inches minimum, in the drawing and in the analysis (per DCR 1001422). This is to correct a mistake: according to the design drawing, 9.84 inches is the nominal value, not the minimum; the actual minimum is 9.79 inches, but in order to provide some margin, 9.74 inches minimum is used in both the drawing and the structural analysis (SAR Appendix A.2.13.5). SAR Appendix A.2.13.5 was revised to address the change in the diameter of the smaller shoulder of the double shoulder trunnion to 9.74 inches.

12. MP197HB-71-1005, Sheet 2, C-7, A-6 and C-3: make three dimensions reference dimensions. This is to be consistent with the design drawing. These dimensions are not used in the safety analysis. Therefore, this change has no impact on the safety analysis.

13. MP197HB-71-1005, Sheet 3, G-5: add "to 125" to the seal surface finish requirement. This is to match the design drawing revision (per DCR 1001190), which is consistent with the manufacturer's recommendations for the surface finish used with a metallic seal. This information is technically needed for fabrication and has no impact on the safety analysis. Leak-tightness of the package will be demonstrated by testing during fabrication, maintenance, and prior to shipment (SAR Chapter A.8).

14. MP197HB-71-1005, Sheet 3, Detail T1: this change is per the response to RAI 2-4.

15. MP197HB-71-1005, Sheet 3, Detail T2: this change is per the response to RAI 2-4.

16. MP197HB-71-1006, Details D and G: this change is per the response to RAI 2-4.

17. MP197HB-71-1008, H-7 and H-2: move the 0° callouts slightly upwards. This is to make these two callouts visible and is an editorial change; it has no impact on the safety analysis.

18. MP197HB-71-1008, H-6: remove the all-around symbol on the weld of Item 23A to Item 23E. This change is to correct a mistake in the weld symbol; this weld is not an all-around weld (interruptions at Item 23F), and has no impact on the safety analysis, where the correct geometry of the weld (*not* all-around) is analyzed.

19. MP197HB-71-1008, Note 15 and MP197HB-71-1009, Detail H: in MP197HB-71-1008, change note to "DRILL Ø1/2" HOLES IN 8 PLACES MINIMUM, EQUALLY SPACED (SEE DETAIL H OF DRAWING MP197HB-71-1009) AND PLUG WELD ITEM 23B TO ITEM 23V". In MP197HB-71-1009, change detail H to only show 8 equidistant plug welds, delete the 2.25-inch distance to the edge and change "12X 2.25 TYP." to "8X MIN. EQUIDISTANT". This change is acceptable because only 8 plug welds are modeled in the structural analysis. The 2.25-inch distance from the edge of the impact limiter to the welds has no impact on the strength of the weld. Only the weld size and number of welds are modeled in the structural analysis, which is not changed.

20. MP197HB-71-1008, C-8: change Note 5 to "THE RADIAL GAP BETWEEN THE IMPACT LIMITER AND THE CASK SHALL NOT EXCEED 0.75"". This change is to provide some

flexibility for the inner diameter of the impact limiter during fabrication. The previous 0.25-inch requirement was incorrect. The gap modeled in the analysis is 0.50 inch. The gap expected in fabrication is in the 0.425-inch to 0.590-inch (radial) range. Setting a maximum gap of 0.75 inch is very close to the gap modeled while providing some flexibility for the inner diameter of the impact limiter during fabrication.

The nominal diameter of the cask is 84.50 inches. This is a reference dimension as it is a stack-up of the inner cavity diameter plus the various thicknesses (inner shell, lead, outer shell) and their tolerances, plus tolerances due to fabrication processes such as rolling of the inner and outer shells, welding, lead pour and minimum lead thickness requirement. The tolerances due to fabrication processes typically always add to the total diameter, which therefore always ends up on the positive side of its nominal value of 84.50 inches, but is limited by fabrication tolerances to a maximum of 84.75 inches.

Therefore, during fabrication, the cask diameter is controlled to a range of 84.50 inches to 84.75 inches. The inside diameter of the impact limiter is controlled during fabrication to between 85.50 inches and 86.00 inches. The radial gap between cask and impact limiter is therefore in the 0.375 inches to 0.75 inches range, which is sufficient to insert the 3/16-inch thick aluminum thermal shield, while limiting the radial gap between cask and impact limiter.

The 0.25±0.13-inch gap currently indicated on Drawing MP197HB-71-1008 would be very hard to meet during fabrication, and results in a minimum value which could actually prevent installation of the aluminum thermal shield between the cask and the impact limiter. Furthermore, the impact limiter structural analysis performed in calculation MP197HB-0255 uses a nominal gap of 0.505 inch. Small deviations from this value will not affect the acceleration results, as the effect on quantity of crushable material is negligible. The attachment bolts were also conservatively modeled without radial clearance to the bolt holes in order to maximize bolt loading. There is a nominal 0.2285-inch bolt-to-hole radial gap that was neglected. Therefore, any adverse impact on the attachment bolts due to increased radial cask-to-impact limiter gap is bounded by the current analysis, and it is acceptable to replace this gap range with a 0.75-inch maximum radial gap.

21. MP197HB-71-1008, G-4: change tolerance on the impact limiter outer diameter to +0.75 / -.03 inch. This is needed because the current tolerance of ±.03 inch is impossible to achieve in fabrication for a component this size. This only changes the maximum possible impact limiter outer diameter, which is conservative since a larger diameter will result in more shock absorbing capabilities; therefore this change has no impact on the design.

22. MP197HB-71-1008, D-2 and F-5: this is an editorial change; the Ø symbol is missing and has been added. This change has no impact on the design.

23. MP197HB-71-1008, add the following to Note 6: "OUTER FACE OF WOOD COMPONENTS MAY BE SLOTTED BELOW THE HOIST RING BOSS AS REQUIRED TO FACILITATE ASSEMBLY. INSIDE FACES OF THE WOOD COMPONENTS MAY BE RELIEVED BELOW ITEMS 23T, AS REQUIRED TO FACILITATE ASSEMBLY". This is to facilitate fabrication and assembly of the impact limiters (per DCR 1001190). The volume of wood affected is very small compared to the total impact limiter wood volume, and therefore this change has no impact on the design.

24. MP197HB-71-1008, Note 17, and MP197HB-71-1009, Note 3: delete both notes (per DCR 1001190). This is an instruction to the fabricator that is not required on the SAR drawings; its intent is to provide directions to the fabricator related to the order of operations during the fabrication sequence and removing it has no impact on the safety analysis.

25. MP197HB-71-1008, in note 9: add items 23B, 23C and 23D to the note, and in view A-A, remove square groove weld callouts from items 23A and 23B weld callouts and add "CJP A/R" instead. Provide the same welds callouts for Items 23C and 23D. This change is made to provide an allowance for the fabricator flexibility to make these items as long as full penetration welds are used. This change does not result in a deviation to the design modeled in the analysis and facilitates fabrication.

26. MP197HB-71-1009, E-2: change "(31.13)" inches to "(31)" inches per DCR 1001190. Specifying a 31-inch reference dimension is adequate. This dimension is not used in the safety analysis, it is a reference dimension, and this change has no impact on the safety analysis.

27. MP197HB-71-1009, F-1: the weld between 23E and 23G is not an all-around weld, while the weld between 23G and 23H is; the weld symbol incorrectly shows both welds as all-around. Therefore, this change to correct this error has no impact on the safety analysis because both welds are correctly modeled and analyzed in the SAR.

27a. MP197HB-71-1009, Section J-J: add alternate Section J-J. This alternate section includes a design enhancement that does not affect any modeled condition. Placing the full length of the threads in the boss improves thread strength and eliminates a potential crud trap. Adding a step on the boss affects only the precision and ease of placement and moving the weld to the outside eases fabrication without having any effect on weld strength, which is PT-examined. This change does not affect the design of the impact limiter

28. NUHRWC-71-1001, Sheet 1: a new note is added to allow the use of threaded inserts for all bolted connections. This change allows repair if the threads are damaged during operations. The new note also specifies that the threaded inserts shall be quality category NITS, like the lid bolts. The NITS quality category is appropriate for lid bolts and for the threaded inserts because it is not possible for the lid to come off the RWC and allow its contents to pass into the MP197HB cavity even if all the bolts were to break, because the gap between the RWC and the cavity is a lot smaller than the depth of the shield plug (0.5 inch per Table A.7-1 and 5 inches per Drawing NUHRWC-71-1001 respectively).

29. NUHRWC-71-1001, Sheet 1: add new note to specify that "Local thin spots in the shell below the minimum of 1.75-inch thickness are acceptable provided the requirements of ASME Section III Sub-section NF are met". This is to prevent issues in case the RWC surface gets scratched during operations. The justification is provided in SAR Section A.2.13.9, revised as a result of the RAI 2-1 response.

30. NUHRWC-71-1001, Sheet 1: add the grapple ring assembly to the Parts List as a new Item (8), Quality Category C. This change is per the response to RAI 2-2.

31. NUHRWC-71-1001: this change is per the response to RAI 2-1.

32. NUHRWC-71-1001: this change is per the response to RAI 2-2.

33. MP197HB-71-1005, Sheet 3 Section S-S: add Item 35 callout (washer) next to Item 34 callout (editorial/clarification, no design impact).

34. RWC Spacer Height. See Enclosure 3 for the discussion of this Item.

35. Drawing MP197HB-71-1002 and Drawing MP197HB-71-1005: Add another option for the cask ports elastomer seals configuration: the main option for the sealing configuration of the ports where elastomer seals are used is a simple O-ring (Item 42) inside a washer (Item 52) configuration, held in place by the port bolt (Item 40); another approved option (see Note 6 of Drawing MP197HB-71-1002) is to combine Items 42 and 52 into one single Parker Stat-O-Seal sealing washer, held by the port bolt (Item 40). This change adds a third option, where Item 52 (washer) is not used, and an alternate Item 40 with a seal groove machined in the bolt head (described in two new details to revised Drawing MP197HB-71-1005) is used, in conjunction with an alternate Item 42 (which becomes Parker part number 2-020 instead of 3-910; all other seal characteristics remain the same). This change is an improvement over the existing approved options, which is expected to make sealing easier, and is also simpler to implement since it does not require a washer. Therefore, this change has a positive impact on the design.

    Detail of the changes:

    a. Drawing MP197HB-71-1002: Add diamond Note 6 next to Item 40, add diamond Note 3 next to Item 52; mention Item 52 in the last sentence of Note 3 with Items 40 and 42 (this is an editorial correction); add wording at the end of Note 6 to allow this third option: "*ALTERNATIVELY, ITEM 52 MAY BE ELIMINATED AND A SEAL GROOVE MAY BE MACHINED UNDER THE HEAD OF ITEM 40 FOR ITEM 42 (SEAL), AS SHOWN ON ALTERNATE ITEM 40 VIEW IN DRAWING MP197HB-71-1005. IN THIS CONFIGURATION, PARKER PART NUMBER 2-019 SHALL BE USED FOR ITEM 42.*

    b. Drawing MP197HB-71-1005, Sheet 3: add alternate view of Item 40 with detailed dimensions of the seal groove under the head (see the revised drawing; two possible groove shapes are given).

36. Drawing MP197HB-71-1002 and Drawing MP197HB-71-1005. Update the references of the lid and ram access cover plate seals; dimension all seal grooves to their mean diameter instead of their inner diameter; and update ram access cover plate seal grooves locations to better match the size of the seals.

    This change is required because the lid seals currently specified are slightly too small for their specified grooves diameters, and the specified ram access cover plate seals grooves locations do not match closely any existing Parker seal part number. Also, specifying the mean diameter of the seal grooves as opposed to their inner diameter makes it easier to control the grooves during fabrication.

    The lid seals grooves inner diameters specified on Drawing MP197HB-71-1006, Detail D, are 71.145 inches and 72.267 inches. Assuming a nominal 0.233-inch groove opening, the mean diameters of the grooves are therefore 71.145 + 0.233 =71.378 inches and 72.267 + 0.233 =72.500 inches. The lid seals are custom Parker seals; 0.275 inch wide (see Items 24 and 25 in parts list on Drawing MP197HB-71-1002). For the seals to have the same mean diameter as their grooves (as recommended by Parker for full dovetail groove

designs), their inner diameters should be 71.378 - 0.275 = 71.103 inches and 72.500 - 0.275 = 72.225 inches.

For simplicity, 71.00-inch and 72.00-inch sizes are specified on revised Drawing MP197HB-71-1002 for Items 24 and 25, respectively, since this results in a maximum (72.225-72.00)/72.00=0.3% circumferential stretch, which has a negligible effect on the required seal compression range.

As far as the ram access cover plate is concerned, there are no Parker seals that closely match the grooves inner diameters of 22.457 inches and 24.788 inches specified on Drawing MP197HB-71-1005, detail T2. The closest sizes of Parker seals available are part numbers 2-472 and 2-473, with inner diameters of 22.940 and 23.940 inches, respectively. The ideal grooves mean diameters for these two seals are 22.940 + 0.275 = 23.215 inches and 23.940 + 0.0275 = 24.215 inches, respectively. However, the 24.215-inch outer groove mean diameter would result in a distance between the two grooves of approximately 1/8 inch, which is considered too small. So the outer groove mean diameter is slightly increased to 24.340 inches, which results in a slightly longer distance between the two grooves of approximately 3/16 inch while only resulting in a (24.340 -24.215)/24.215 = 0.5% circumferential stretch, which has a negligible effect on the required seal compression. The inner groove diameter is taken equal to the ideal value of 23.215 inches.

This change therefore ensures that the seals mean diameters match the grooves mean diameters, thus ensuring optimal sealing and ease of reaching leak-tightness criteria, and is therefore a design improvement.

a. Detail of the changes for Drawing MP197HB-71-1002:

	New Lid O-rings Inner Diameter (ID) (Inches)	**New Ram Access Cover Plate O-rings Part Numbers (in Note 3)**
Inner groove	71.00 (Item 24)	2-472 (Substitute for item 37)
Outer groove	72.00 (Item 25)	2-473 (Substitute for item 36)

Materials, cross-section diameter and quality categories of the seals do not change.

b. <u>Detail of the changes for Drawing MP197HB-71-1005 (detail T2):</u>

<u>The ram access cover plate seals grooves are slightly moved from their existing</u> locations to better match the available Parker seals sizes of 2-472 and 2-473, and they are dimensioned to their mean diameter instead of inner diameter. The mean diameter of the inner seal groove changes to 23.215 inches. The mean diameter of the outer seal groove changes to 24.340 inches.

Note: Only the metal seal outer diameter (24.910 inches) is used in the SAR (page A.2.13.2-17). The new outer groove outer diameter of 24.340m + 0.235 = 24.575 inches is still lower than 24.910 inches, so no further changes are required to the SAR.

c. Detail of the changes for Drawing MP197HB-71-1006 (detail D):

The lid seals grooves locations remain unchanged from their existing values. However, they are now dimensioned to their mean diameter (respectively 71.378 inches and 72.500 inches for inner and outer seals grooves) instead of to their inner diameter.

Note: this change affects SAR pages A.2.13.2-3 and A.2.13.2-5, where the 72.267 inches groove ID is used to calculate the outer seal outer diameter (72.737 inches). The value calculated from the mean diameter is 72.500 + 0.235 = 72.735 inches. Since the value used in the SAR is conservative (lower than the 72.737 inches used in the SAR) and represents a negligible variation, this change is acceptable without further changes to the SAR.

37. Drawing MP197HB-71-1002: add a new note stating "ITEMS 45A / 45B MAY BE MADE FROM MULTIPLE PLATES GLUED TOGETHER USING SCOTCH-WELD DP8005 OR TN-APPROVED EQUIVALENT". This change is to simplify the fabrication of items 45A and 45B. It has no impact on the design because the final volume and shape of the trunnion plugs will remain the same.

38. Drawing MP197HB-71-1002, Item 23M (fusible plug washer and O-ring): change Item 23M part number to 600-31 30-1/2 and the material to "SST/Fluorocarbon". The current designation of 600-01 02-1/2 is for a nitrile seal ("01") paired with a zinc-plated washer material ("02"); the nitrile seal is not readily available whereas a fluorocarbon seal ("31") is easier to source while also an adequate material for this application; as for the zinc-plated washer, it could leave rusty streaks when exposed repeatedly to humidity. The new designation ("30") is for a stainless steel washer material which eliminates this issue. This is a design improvement.

39. Drawing MP197HB-71-1009: add a new note "IN ADDITION TO THE TWO ALL-AROUND WELDS SHOWN ON THE SIDE VIEW, THE THERMAL SHIELD (ITEM 58) MAY BE MADE FROM MULTIPLE PIECES WELDED TOGETHER USING FULL PENETRATION WELDS, AND MAY BE MARKED / STAMPED AS REQUIRED."

Enclosure 3 to E-52844

NUHOMS®-MP197 Non- RAI SAR Changes

NUHOMS® MP197 Safety Analysis Report (SAR) Changes

TN Americas LLC is requesting changes to the NUHOMS® MP197 SAR, which are not related to the RAI questions. This enclosure lists the change, along with the description of the change and its justification, as well as its impact, if any, on the safety analysis of the NUHOMS® MP197 cask.

1. **RWC Spacer Height**

   As a result of a due diligence review of the SAR drawings with RWC designs, a clarification was made with respect to the spacer heights for the three RWC designs (RWC-B, RWC-W, and RWC-DD). SAR Table A.7-1 was revised to correct the typographical error of 2.20 inches for the RWC-DD spacer height to 2.25 inches. The spacer heights for the DWC-W and RWC-B remain at 11.75 inches. The SAR initially included a generic spacer height for the designs, but with the addition of the RWC-DD design with a different length, different spacer lengths required different spacer heights. SAR Table A.2.13.14-1 was revised to provide clarification with the addition of a note that addresses the cold gap between the RWCs and the cask. This change has no impact on the design because the structural analysis is based on a maximum 0.50-inch total gap between the DSCs and the cask, which will be met as stated in Note 2 of Table A.2.13.14-1 and in Note 1 of Table A.7-1 by either adding a top spacer, or by combining the top spacer into the bottom spacer.

   In the case of the RWCs, the values indicated in Table A.2.13.14-1 result in a cold gap of 0.96 to 1.00 inch. The sleeve that will be used when transporting the RWCs (described on Drawing MP197HB-71-1014, note 3) may include a 0.75-inch thick stiffener plate at the bottom. If a sleeve is used, it will lower the resulting cold gap to between 0.21 inch and 0.25 inch, which meets the below 0.50-inch gap requirement. If the sleeve does not include this 0.75-inch thick stiffener plate at the bottom, then either a top spacer will be used, or the bottom spacer height will be increased to bring the total gap to below 0.50 inch.

   No hot gaps or thermal expansion need to be considered to set the spacer's height, because the RWC heat loads do not exceed 5 kW (A.1.4.9A, Section A.1.4.9A.2.2) and will not result in any noticeable increase in the temperatures of cask components.

   The RWC spacers are not considered in the thermal, shielding, or criticality analysis.

   SAR Table A.1.2 was revised to add a row for the RWC to provide the required sleeves, spacers and a recommendation regarding fins to be used on the cask.

   SAR Table A.2.13.14-1 was revised to add a note specifying the cold gaps for the RWC designs.

   SAR Table A.7-1 was revised to correct the spacer height for the RWC-DD to 2.25 inches.

2. Shielding and Lead Thickness

A non-conforming condition for the gamma shield lead pour for MP197HB Unit 01 resulted in localized areas where the thickness of lead is less than the 2.85 inch acceptance criteria. The reduced thickness of lead between the inner shell and outer shell is localized to locations associated with the longitudinal weld seams on the outer shell as shown in Figure 2-1 below. The under-thickness areas are illustrated with the color conventions shown in Figure 2-1. The under-thickness areas is between the shear key and trunnions. The areas at angular coordinates above the trunnions (bottom part of Figure 2-1) include areas with less than 1 mm under-thickness (blue color), under-thickness areas between 1 mm and 2 mm (green color) and under-thickness areas between 2 mm and 3 mm (yellow color).

As a result of the non-conforming condition for MP197HB Unit 01, Section A.5.5.5 was added to SAR Chapter A.5 for assessing the impacts of the localized under thickness conditions with respect to the limiting dose rates for spent fuel and RWC contents loaded in MP197HB transport cask.

Section A.5.5.5.1 assesses the impact on dose rates for spent fuel content and Section A.5.5.5.2 assesses the impact of reduced gamma shield lead thickness on dose rates for RWC content.

The shielding performance of MP197HB Unit 01 is not affected for the authorized spent fuel contents, as discussed in new Section A.5.5.5.1. In short, the limiting dose rates have a large neutron component, and the neutron component of the total dose rate is not affected by small changes in the lead thickness. Details of the spent fuel analysis are provided in Section A.5.5.5.1.

However, the RWC is used to transport primary gamma emitters, such as Co-60, and is more sensitive to the lead thickness than spent fuel. Due to the localized reduction in lead thickness for MP197HB Unit 01, the RWC content for MP197HB Unit 01 is downgraded from 90,000 Ci Co-60 equivalent to 70,000 Ci Co-60 equivalent. Details of the RWC analysis for MP197HB Unit 01 are provided in Section A.5.2.1.5.

Chapter A1, Appendix A.1.4.9A, Chapter A.5 (Section A.5.1, Section A.5.1.1, Section A.5.1.3.2, Section A.5.2, Section A.5.2.1.5 and Section A.5.5.5), Chapter A.7 and Chapter A.8 were revised for this change.

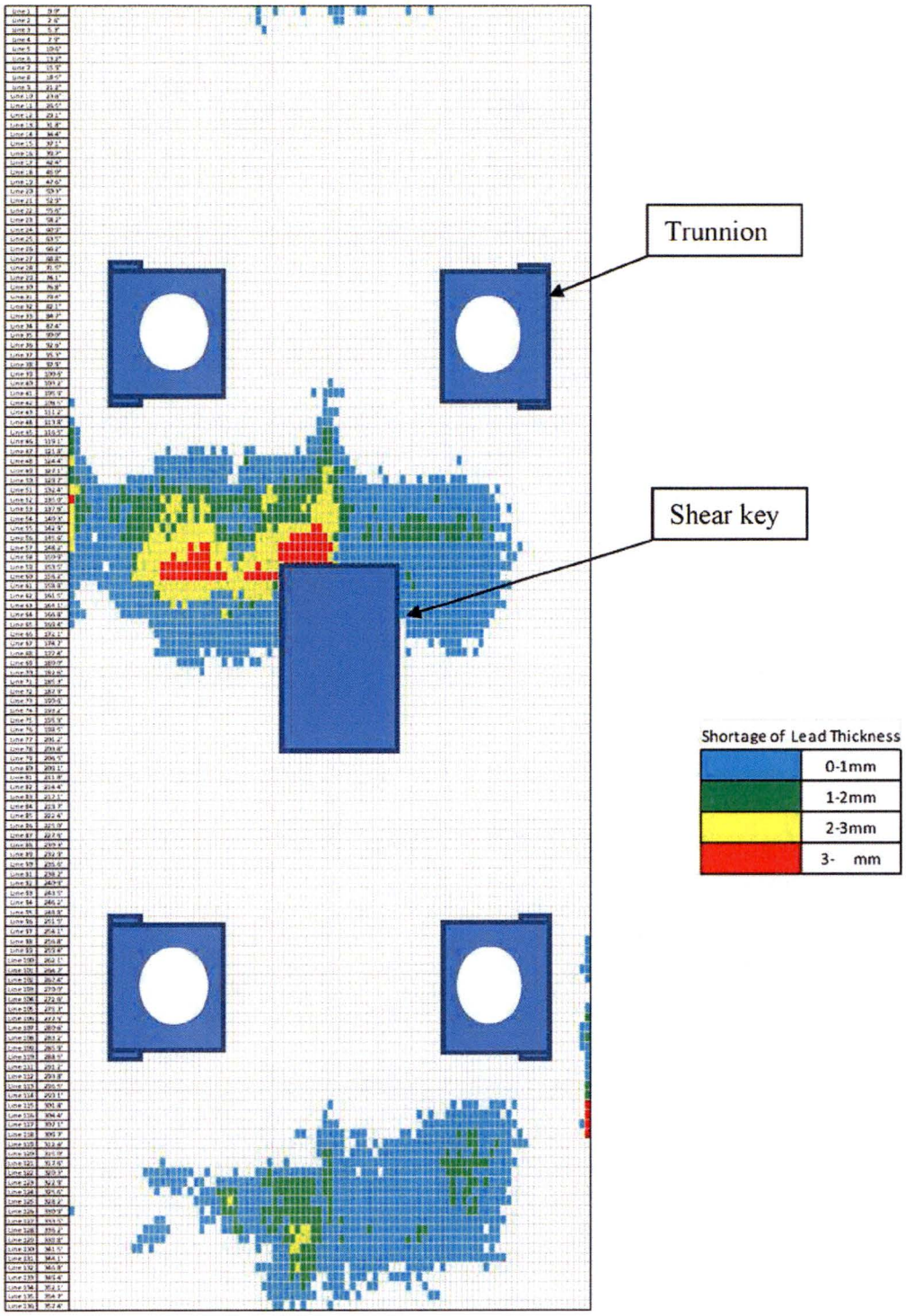

Figure 2-1 – Lead Gamma Scanning – MP197HB Unit 01

Enclosure 5 to E-52844

Listing of Computer Files Contained in Enclosure 6

Listing of Computer Files Contained in Enclosure 6

Disk ID No. (size)	Discipline	System/Component	File Series (topics) (Size)	Number of files
Enclosure 6 One Computer Disk Shielding Folder (563 MB)	Shielding	MP197HB/RWC	**MP197HB Response Function – RWC Content:** - "0_6Mev-only" directory: MCNP input and output files for RWC content response function at 0.6 MeV and weight window file - "other-MeV" directory: MCNP input, output and continue output files for RWC content response function from 0.8 MeV through 10 MeV. SAR Section A.5.2.1.5 for 90,000 Ci of Co-60 or (140 MB)	8
		MP197HB Unit 01	**MP197HB Unit 01 – RWC Content** - "MP197HB Unit 01-RWC" directory: input and output files for MP197HB Unit 01 RWC content (2.77" lead thickness). - "MP197HB Unit 01-RWC-RF" directory: input and output files for MP197HB Unit 01 RWC content (2.77" lead thickness). Similar subfolders structure than that for "MP197HB Response Function – RWC Content" directory above SAR Section A.5.2.1.5 for 70,000 Ci of Co-60 or equivalent - MP197HB Unit 01 (140 MB)	12
		MP197HB/Spent fuel	**MP197HB Localized Lead Under-Thickness Assessment - Spent Fuel Content:** - "69BTH – NCT" directory: "gamma" and "neutron" subfolders including input and output files for 69BTH in MP197HB with localized lead under-thickness. - "69BTH – HAC" directory: "gamma" and "neutron" subfolders including input and output files for 69BTH in MP197HB with localized lead under-thickness (283 MB) SAR Section A.5.5.5.1	17

The indicated SAR sections are those SAR sections associated with the computer files