25 Carriage Drive
Easton, CT 06612

Material Safety Licensing Branch
Division of Material Safety
Office of Nuclear Material Safety and Safeguards
US Nuclear Regulatory Commission
Washington, DC 20555-0001

July 18, 2018

To Whom it may concern,

Enclosed is our NRC form 313 renewal application.

We have been importing and possessing these same lamps for the last 10 years. Our current License numbers are 06-23969-01 and 06-23969-02E. There is little or no changes to any of our lamps, labelling and production in the last 10 years. I have enclosed a full set of similar paperwork that had been requested when applying for our initial licenses.

The only change on the licenses will be the storage location. We are currently in the process of moving our business to the following location:
Superior UV Technologies
310 Bishop Ave
Bridgeport CT 06610

We will no longer be storing or distributing licensed material from 17 Centerview Drive, Shelton, CT 06484 or from 25 Carriage Drive, Easton CT 16612.

We are still the initial importers of UV lamps produced by Licht Tech/Radium and BLV/Ushio. Our lamps are produced in Europe under our trade names of Solar Elements and AUVL. Our lamps are registered with the FDA as indicated by our FDA #'s below:

FDA #8720182-16
FDA #0120351-15
FDA #9920907-12
FDA #0220025-05
FDA #9221134-20
FDA #0520864-03
FDA #8520252-05

We do not alter, modify or repackage any of the UV lamps we import prior to delivery to our customers. We will by warehousing our lamps in Bridgeport, CT. I have included varies information along with our completed renewal applications:

Details of construction and dimensions of the lamp

Please see attached drawings. I have included drawings of the lamp with socket, the burner and the arc tube. The lamp consists of the burner and socket (fixed with cement) only. There is no lamp body since there is no outer bulb.

Prototype Testing

After the filling process the lamp voltages of all lamps are monitored. A burner which is not inside the specification is regarded as a possible leaker and is discarded. After putting the socket on the burner all lamps are burnt in. A lamp passing this test is considered to be o.k. because a leaking lamp would not start up.

Labelling

Please see attached copies of the labels used to identify our products. We currently indicate that our lamps contain Kr-85 on the individual box label, the case label and the user instruction sheet included with each lamp. All of our individual lamps are also etched when possible with Kr-85. The ceramic base on the 400w Lamps is very small not allowing us the room necessary to add Kr-85.

Measurements

The filling devices are controlled once a week. This is done by controlling the filling pressure of a burner which is actually being produced. The quantity of Kr-85 in the arc tube is a function of the specific activity of the filling gas and the volume of the arc tube. Each tank of the Argon-Krypton-85-misxture received from the supplier comes with a certification concerning the Krypton-85 concentration. The determining parameter for the volume with a given diameter is the pinching distance. This value is controlled twice every shift for each different type.

Quality control

After pinching every burner is checked visually. Burners with cracks or channels in the pinch are discarded. After filling every burner is switched on and the lamp voltage is monitored. Burners not inside the specification are being destroyed. After putting the socket on every lamp is burnt in. Lamps failing this test are being destroyed. During continuous production period's life and reliability tests are performed on a regular basis, e.g. 3 lamps per type and day are tested for electrical parameters and UV-output.

Measurement Certificate from the Kr-85 gas supplier

Attached are documents from BLV/Ushio and Licht Tech / Radium showing a Kr-85 delivery and certificate for the factories.

Amount of Gas in lamps

Definition of activity in agreement to the scientific standard is:

activity: radioactive decay (the phenomenon of natural and artificial radioactivity) is defined as one transformation (or decay) per second.
The SI unit is Bequerel. 3.7 exp(10) Bq equals 1 Ci.

That means, that the Measured "activity" is an absolute number and is measured independent of the mass of the considered element.

In our quartz lamp it means:
In 1 liter of gas we have 50 microcourie. In 30 milliliters of gas we have 30/1000 * 50 microcourie = 1.5 microcourie.

I believe I have enclosed all the necessary information. Should there be any additional information needed I will address it at once. Thank you in advance.

Sincerely,

Robert Klem

NRC Form 313

Question 5-11

5. a) Krypton 85 gas (Kr-85)

   b) Low Pressure gas in sealed quartz lamps.

   c) Max amount per lamp is 0.120 microcuries. Total in possession not to exceed 400 microcuries. The manufactures purchase 100% Argon with 0.05mCi Kr-85L and specifies a maximum quantity of 0.120 microcuries per lamp. Copies of the certificate for the gas purchases are attached.

6. Gas filling used in UV Tanning lamps that will be imported and sold.

7. Robert Klem. I have been to both Radium and BLV in Germany. I have also been to Licht Tech in Hungary and have met with all their safety officials and discussed the safe handling of the products. In addition, I have completed a Radiation Safety Awareness class and a certificate demonstrating that is attached.

8. We are a very small company and the only people that have access to and handle the products are myself and my partner.

9. The lamps will be stored in a locked room in our new facility with signage on the only door. Copy of which is attached. Each lamp is individually boxed and then boxed in cases of 25. Copies of the individual box and the case box are attached. Also attached is the user sheet which is enclosed in every individual lamp box.

10. We do not have any formal Radiation Safety Program. We do not handle the lamps directly. They are each individually boxed and then packaged for delivery by our manufactures in Europe prior to our purchase. We do not repackage the individual lamps or handle them prior to our sale of them. We average just a few lamp orders a day which consist of packing the pre-packaged lamps in UPS approved shipping boxes.

11. We will not be generating any real amount of waist from these products besides a small number of returned lamps that did not light. We collected these lamps and send them back annually to the manufacturer. We do have a recycling agreement with NLR in East Windsor, CT if the need arises.

ENCLOSURERS

1 Gas delivery papers, certificates and tags from manufactures
2 Radiation safety class certificate
3 Individual and case box labels
4 Individual lamp etch
5 Uses sheet enclosed in each lamp box
6 Warning placed on storage room door
7 Details on construction on a couple of sample lamps

NRC FORM 313 **U.S. NUCLEAR REGULATORY COMMISSION**
(10-2017)
10 CFR 30, 32, 33, 34, 35, 36, 37, 39, and 40

APPLICATION FOR MATERIALS LICENSE

APPROVED BY OMB: NO. 3150-0120 **EXPIRES: 06/30/2019**

Estimated burden per response to comply with this mandatory collection request: 4.3 hours. Submittal of the application is necessary to determine that the applicant is qualified and that adequate procedures exist to protect the public health and safety. Send comments regarding burden estimate to the Information Services Branch (T-2 F43), U.S. Nuclear Regulatory Commission, Washington, DC 20555-0001, or by e-mail to Infocollects.Resource@nrc.gov, and to the Desk Officer, Office of Information and Regulatory Affairs, NEOB-10202, (3150-0120), Office of Management and Budget, Washington, DC 20503. If a means used to impose an information collection does not display a currently valid OMB control number, the NRC may not conduct or sponsor, and a person is not required to respond to, the information collection.

INSTRUCTIONS: SEE THE CURRENT VOLUMES OF THE NUREG-1556 TECHNICAL REPORT SERIES ("CONSOLIDATED GUIDANCE ABOUT MATERIALS LICENSES") FOR DETAILED INSTRUCTIONS FOR COMPLETING THIS FORM: http://www.nrc.gov/reading-rm/doc-collections/nuregs/staff/sr1556/. SEND TWO COPIES OF THE COMPLETED APPLICATION TO THE NRC OFFICE SPECIFIED BELOW.

APPLICATION FOR DISTRIBUTION OF EXEMPT PRODUCTS FILE APPLICATIONS WITH:

MATERIALS SAFETY LICENSING BRANCH
DIVISION OF MATERIAL SAFETY, STATE, TRIBAL AND RULEMAKING PROGRAMS
OFFICE OF NUCLEAR MATERIALS SAFETY AND SAFEGUARDS
U.S. NUCLEAR REGULATORY COMMISSION
WASHINGTON, DC 20555-0001

ALL OTHER PERSONS FILE APPLICATIONS AS FOLLOWS:

IF YOU ARE LOCATED IN:

ALABAMA, CONNECTICUT, DELAWARE, DISTRICT OF COLUMBIA, FLORIDA, GEORGIA, KENTUCKY, MAINE, MARYLAND, MASSACHUSETTS, NEW HAMPSHIRE, NEW JERSEY, NEW YORK, NORTH CAROLINA, PENNSYLVANIA, PUERTO RICO, RHODE ISLAND, SOUTH CAROLINA, TENNESSEE, VERMONT, VIRGINIA, VIRGIN ISLANDS, OR WEST VIRGINIA,

SEND APPLICATIONS TO:

LICENSING ASSISTANCE TEAM
DIVISION OF NUCLEAR MATERIALS SAFETY
U.S. NUCLEAR REGULATORY COMMISSION, REGION I
2100 RENAISSANCE BOULEVARD, SUITE 100
KING OF PRUSSIA, PA 19406-2713

IF YOU ARE LOCATED IN:

ILLINOIS, INDIANA, IOWA, MICHIGAN, MINNESOTA, MISSOURI, OHIO, OR WISCONSIN, SEND APPLICATIONS TO:

MATERIALS LICENSING BRANCH
U.S. NUCLEAR REGULATORY COMMISSION, REGION III
2443 WARRENVILLE ROAD, SUITE 210
LISLE, IL 60532-4352

IF YOU ARE LOCATED IN:

ALASKA, ARIZONA, ARKANSAS, CALIFORNIA, COLORADO, HAWAII, IDAHO, KANSAS, LOUISIANA, MISSISSIPPI, MONTANA, NEBRASKA, NEVADA, NEW MEXICO, NORTH DAKOTA, OKLAHOMA, OREGON, PACIFIC TRUST TERRITORIES, SOUTH DAKOTA, TEXAS, UTAH, WASHINGTON, OR WYOMING,

SEND APPLICATIONS TO:

NUCLEAR MATERIALS LICENSING BRANCH
U.S. NUCLEAR REGULATORY COMMISSION, REGION IV
1600 E. LAMAR BOULEVARD
ARLINGTON, TX 76011-4511

PERSONS LOCATED IN AGREEMENT STATES SEND APPLICATIONS TO THE U.S. NUCLEAR REGULATORY COMMISSION ONLY IF THEY WISH TO POSSESS AND USE LICENSED MATERIAL IN STATES SUBJECT TO U.S. NUCLEAR REGULATORY COMMISSION JURISDICTIONS.

1. THIS IS AN APPLICATION FOR *(Check appropriate item)*
   - [ ] A. NEW LICENSE
   - [ ] B. AMENDMENT TO LICENSE NUMBER
   - [x] C. RENEWAL OF LICENSE NUMBER 06-23969-02E

2. NAME AND MAILING ADDRESS OF APPLICANT *(Include zip code)*
   Superior UV Technologies
   25 Carrige Drive
   Easton, CT 06612

3. ADDRESS WHERE LICENSED MATERIALS WILL BE USED OR POSSESSED
   Superior UV Technologies
   310 Bishop Ave
   Bridgeport, CT 06610

4. NAME OF PERSON TO BE CONTACTED ABOUT THIS APPLICATION
   Robert Klem
   BUSINESS TELEPHONE NUMBER: 800-346-3136
   BUSINESS CELLULAR TELEPHONE NUMBER: 917-699-8739
   BUSINESS E-MAIL ADDRESS: robertK@SuperiorUV.Com

SUBMIT ITEMS 5 THROUGH 11 ON 8-1/2 X 11" PAPER. THE TYPE AND SCOPE OF INFORMATION TO BE PROVIDED IS DESCRIBED IN THE LICENSE APPLICATION GUIDE.

5. RADIOACTIVE MATERIAL
   a. Element and mass number; b. chemical and/or physical form; and c. maximum amount which will be possessed at any one time.
6. PURPOSE(S) FOR WHICH LICENSED MATERIAL WILL BE USED.
7. INDIVIDUAL(S) RESPONSIBLE FOR RADIATION SAFETY PROGRAM AND THEIR TRAINING AND EXPERIENCE.
8. TRAINING FOR INDIVIDUALS WORKING IN OR FREQUENTING RESTRICTED AREAS.
9. FACILITIES AND EQUIPMENT.
10. RADIATION SAFETY PROGRAM.
11. WASTE MANAGEMENT.

12. LICENSE FEES (Fees required only for new applications, with few exceptions*)
    (See 10 CFR 170 and Section 170.31)
    ***Amendments/Renewals that increase the scope of the existing license to a new or higher fee category will require a fee.**
    FEE CATEGORY: ____ AMOUNT ENCLOSED $ ____

PER THE DEBT COLLECTION IMPROVEMENT ACT OF 1996 (PUBLIC LAW 104-134), YOU ARE REQUIRED TO PROVIDE YOUR TAXPAYER IDENTIFICATION NUMBER. PROVIDE THIS INFORMATION BY COMPLETING NRC FORM 531: https://www.nrc.gov/reading-rm/doc-collections/forms/nrc531info.html.

13. CERTIFICATION. *(Must be completed by applicant) THE APPLICANT UNDERSTANDS THAT ALL STATEMENTS AND REPRESENTATIONS MADE IN THIS APPLICATION ARE BINDING UPON THE APPLICANT.*

THE APPLICANT AND ANY OFFICIAL EXECUTING THIS CERTIFICATION ON BEHALF OF THE APPLICANT, NAMED IN ITEM 2, CERTIFY THAT THIS APPLICATION IS PREPARED IN CONFORMITY WITH TITLE 10, CODE OF FEDERAL REGULATIONS, PARTS 30, 32, 33, 34, 35, 36, 37, 39, AND 40, AND THAT ALL INFORMATION CONTAINED HEREIN IS TRUE AND CORRECT TO THE BEST OF THEIR KNOWLEDGE AND BELIEF.
WARNING: 18 U.S.C. SECTION 1001 ACT OF JUNE 25, 1948 62 STAT. 749 MAKES IT A CRIMINAL OFFENSE TO MAKE A WILLFULLY FALSE STATEMENT OR REPRESENTATION TO ANY DEPARTMENT OR AGENCY OF THE UNITED STATES AS TO ANY MATTER WITHIN ITS JURISDICTION.

CERTIFYING OFFICER -- TYPED/PRINTED NAME AND TITLE	SIGNATURE	DATE
Robert Klem, Member		7/18/18

FOR NRC USE ONLY

TYPE OF FEE	FEE LOG	FEE CATEGORY	AMOUNT RECEIVED	CHECK NUMBER	COMMENTS
			$		
APPROVED BY				DATE	

NRC Form 313

Question 5-11

5. a) Krypton 85 gas (Kr-85)

   b) Low Pressure gas in sealed quartz lamps.

   c) Max amount per lamp is 0.120 microcuries. Total in possession not to exceed 400 microcuries. The manufactures purchase 100% Argon with 0.05mCi Kr-85L and specifies a maximum quantity of 0.120 microcuries per lamp. Copies of the certificate for the gas purchases are attached.

6. Gas filling used in UV Tanning lamps that will be imported and sold.

7. Robert Klem. I have been to both Radium and BLV in Germany. I have also been to Licht Tech in Hungary and have met with all their safety officials and discussed the safe handling of the products. In addition, I have completed a Radiation Safety Awareness class and a certificate demonstrating that is attached.

8. We are a very small company and the only people that have access to and handle the products are myself and my partner.

9. The lamps will be stored in a locked room in our new facility with signage on the only door. Copy of which is attached. Each lamp is individually boxed and then boxed in cases of 25. Copies of the individual box and the case box are attached. Also attached is the user sheet which is enclosed in every individual lamp box.

10. We do not have any formal Radiation Safety Program. We do not handle the lamps directly. They are each individually boxed and then packaged for delivery by our manufactures in Europe prior to our purchase. We do not repackage the individual lamps or handle them prior to our sale of them. We average just a few lamp orders a day which consist of packing the pre-packaged lamps in UPS approved shipping boxes.

11. We will not be generating any real amount of waist from these products besides a small number of returned lamps that did not light. We collected these lamps and send them back annually to the manufacturer. We do have a recycling agreement with NLR in East Windsor, CT if the need arises.

ENCLOSURERS

1 Gas delivery papers, certificates and tags from manufactures
2 Radiation safety class certificate
3 Individual and case box labels
4 Individual lamp etch
5 Uses sheet enclosed in each lamp box
6 Warning placed on storage room door
7 Details on construction on a couple of sample lamps
8 Annual report for 2017 showing amount sold and current possession as of 12/31/17

IZOTOP
IZOTÓP INTÉZET KFT.
H-1121 Budapest, Konkoly-Thege Miklós út 29-33
H-1535 Budapest, Pf. 851. Tel.: 06(1)392-2577 Fax: 06(1)395-9247 E-mail: commerce@izotop.hu

NP240222 F

BA 0409/03

Megrendelő: **MESSER HUNGAROGÁZ KFT**
HU-1044 BUDAPEST, VÁCI ÚT 117.

Címzett: **LightTech Lámpatechnológia Kft.**
HU-2120 DUNAKESZI, HEGYREJÁRÓ ÚT 1.

MŰBIZONYLAT

radioaktív készítményről

Izotóp	Kr-85
Megnevezés	**Kr-85/Air gas mixture**
Gyártó	CESIO S.R.O.
Katalógusjel	**KR5AR0010M**
Vámtarifa-szám	2844400000
Névleges aktivitás	**1 x 370,00 MBq**
Mennyiség	**1 x 1 db**
Aktivitás dátuma	2017.02.21.
Kiszerelés	palack
Gyártási szám	**015517/10561928**
Azonosító	**0109/03**
Zárás	Az alkalmazott "A" típusú csomagolás a radioaktív anyagok szállítás feltételeinek megfelel
Vevő hivatkozási száma	**4501393964**

Linde

Electronic & Specialty Gases,
a Division of
Linde Gas North America LLC

320 MT. PLEASANT AVE. NEWARK,NJ 07104
(973) 268-2201

Customer P.O.# 1814K/2014K

CYL. No. 10962004
Vol./Press: 210 LT / 1448 PSIG
DATE 12/1/14 **MAT#** 24092101

Contents:

KRYPTON-85 0.05 mCi/ltr
ARGON BALANCE

Průvodní list otevřeného radionuklidového zářiče CESIO

Certificate for unsealed radioactive material

Základní údaje General information					
číslo osvědčení certificate no.	dodavatel supplier				číslo objednávky order no.
315017	IZOTOP - Institute of Isotopes Co., Ltd				0316/(55571)
typ zařízení product code	typ vnitřního obalu type of the primary container	fyzikální forma physical state	chemická forma chemical compound	počet nuklidů number of nuclide	nuklid nuclide
Kr5.200	steel container	gas	element	4	Kr-85

Výsledky zkoušek Test report					
č. vnitřního kontejneru no. of primary container	aktivita activity		specifická aktivita activity concentration	objem kontaminovaného materiálu volume, mass	datum měření date of measurement
	MBq	mCi	mCi/ml	ml	
1[illegible]00	3.70E+02	1.00E+01	5.00E-05	2.00E+05	21.02.17
1[illegible]00	3.70E+02	1.00E+01	5.00E-05	2.00E+05	21.02.17
[illegible]	3.70E+02	1.00E+01	5.00E-05	2.00E+05	21.02.17
1[illegible]00	3.70E+02	1.00E+01	5.00E-05	2.00E+05	21.02.17

Technické charakteristiky Technical characteristics	
Radiochemická čistota radiochemical purity	
Radiochemická čistota radiochemical purity	
nuklid radionuclide or radionuclides	[illegible]
Chemické nečistoty chemical impurities	Total<0.19%, incl. H_2O<0.01%, H_2<0.01%, N_2<0.03%, O_2<0.03%, Xe<0.08%, Ar<0.03%

Poznámky, zprávy Notes, remarks
internal pressure: 1.00 bar ± 5% Kr-85 + Air (purity 5.0)

datum vydání date of issue	21.02.17	podpis signature		jméno name	Věra Krátká

[illegible]

Solar Elements #100915 & #100916

Radium

The diagrams below represent a typical arc tube, quartz burner and lamp with socket. The lamp depicted is Solar Elements model #100915 (R7s sockets) or Solar Elements model #100916 (wire leads).

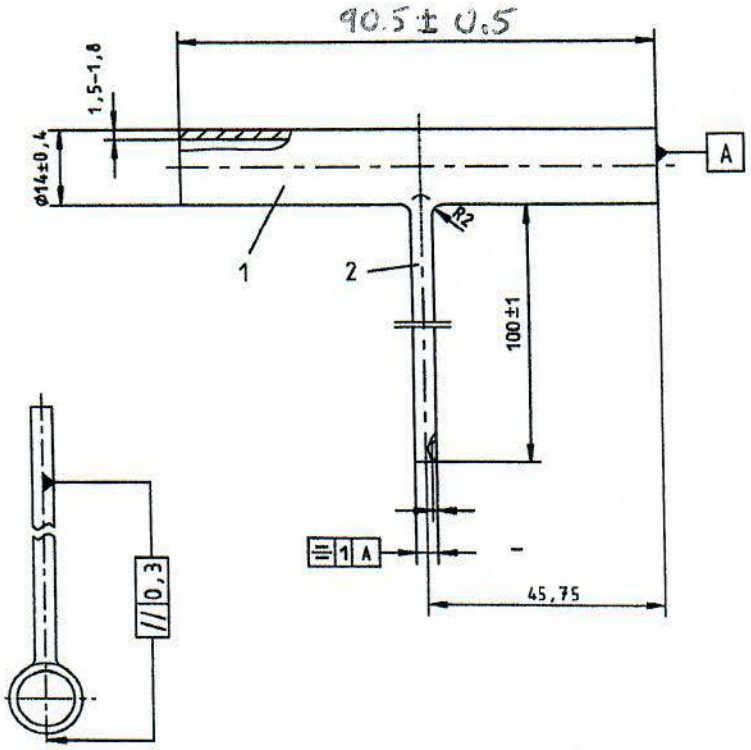

All dimensions shown in millimeters

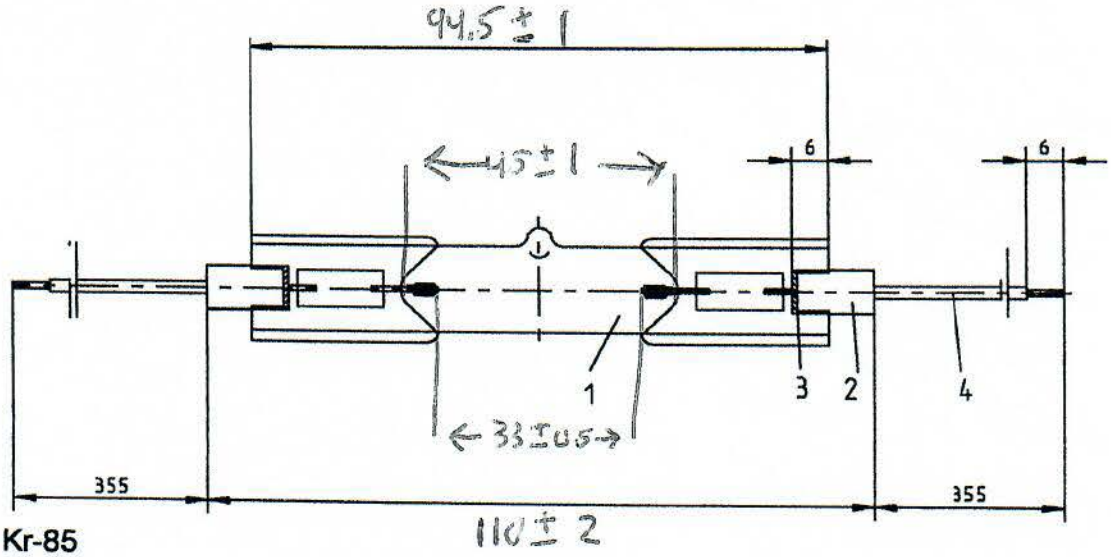

1 – Filling containing Kr-85

2 – Ceramic socket

3 – Cement to glue the ceramic socket to the quartz arc pinching

4 – Wire lead (#100916 only)

Attachment 4 (BLV) - B1 & B8

BLV USHIO Group

Aktivity level calculations of the tanning lamp 23627001

Ordered Gas from Osram see delivery note: 18.5 MBq/L

Activity level of 1 cm^3 is 18.5 kBq at 1 bar= 10^5 Pa

Activity reduction by filling pressure of only 60 mbar =

0.06 *18.5 kBq/cm^3=1110 Bq/cm^3

Volume of vessel: length = 4 cm, inner-diameter 1.8 cm
10 cm^3

Overall activity 1110 Bq/cm^3*10 cm^3= 11.1 kBq

NRC Limit for Exempt license lower than 30 µCi=1110 kBq

Conclusion: The NRC-limit allows 100 time more activity in one lamp.

BLV Licht- und Vakuumtechnik GmbH

Münchener Straße 10
85643 Steinhöring
Telefon: +49 (0) 8094 906-0
Internet: www.blv-licht.de
E-Mail: sales@blv-licht.de

Fax Verkauf: +49 (0)8094 906-164
Fax Verwaltung, Technik: +49 (0)8094 906-111
Fax Einkauf: +49 (0)8094 906-136

Geschäftsführer:
Tetsuo Kato
Klaus Elfinger

Bank of Tokyo-Mitsubishi
IBAN DE16 30001 0700 0000 0148 78
Konto. Nr. 511 014 878
Swift code: BOTK DE DX
BLZ: 300 107 00

Handelsregister:
München HRB 55 706
USt-IdNr.: DE131170621
Steuer Nr.: 9156/122/50003

DELIVERY NOTE FOR FILLING GAS

Lieferschein

OSRAM

DE

Auslieferung:	303202553	Auftrag: 202905285		**Bestelldatum:**	05.05.2008
Datum:	03.06.2008	Kunde: 1001349		**Bestellnr.:**	16229

Lieferanschrift:
BLV LICHT + VACUUMTECHNIK GMBH
Hohenlindener Str. 7
D-85643 STEINHOERING

Rechnungsanschrift:
BLV Licht- und Vakuumtechnik GmbH
Münchener Str. 10
D-85643 STEINHÖRING

Die mit "AL ungleich N" gekennzeichneten Güter unterliegen bei der Ausfuhr aus der EU der europäischen bzw. deutschen Ausfuhrgenehmigungspflicht.
Die mit "ECCN ungleich N" gekennzeichneten Güter unterliegen der US-Reexportgenehmigungspflicht. Auch ohne Kennzeichen, bzw. bei Kennzeichen "AL:N" oder "ECCN:N" kann sich eine Genehmigungspflicht, unter anderem durch den Endverbleib und Verwendungszweck der Güter, ergeben.
Alle unsere Lieferungen stehen unter dem Vorbehalt der Beachtung der OSRAM-Exportkontroll-Klausel. Diese kann vom Kunden eingesehen werden unter http://www.osram.com/vdcs

Pos.	Menge	ME	Materialnummer / Kundenartikelnummer / Bezeichnung / Gefahrguthinweise	Charge	Auftragsnummer / Pos. / Bestellnummer / AL-Nr. / ECCN	Nettogewicht KG / Bruttogewicht KG
10	1.217 ≙ 4 FL.	L	B4680099XX12 GAS AR + 18,5 MBQ KR 85/L Mit folgenden Gefahrgutdaten: ADR - Straße: UN UN 2915 Radioaktive Stoffe, Typ A-Versandstück		202905285 / 000010 16229 N N	2,030 17,100

GEBUCHT
- 3. Juni 2008
durch ...

EINGEGANGEN
durch ...

Nettogew.:	2,030 KG	Colli pro Sendung: 4	Spediteur: Trans-o-Flex GmbH & Co. KG	Lieferbedingungen: FCA Berlin	Versandstelle: 0801
Bruttogew.:	17,100 KG		Versandart: Speditionssammelgut / Gepackt durch:		
Volumen:	0,045 M3				

Ansprechpartner:	Tel.	Fax	E-mail
Philipp	(030) 3386 2607	(030) 3386 2605	J.Philipp@osram.com

UCR: 40503003032025537
VAT-nr. DE811148275 WEEE-Nr. 71568000

Briefadresse:
OSRAM GmbH
Werk Berlin Spandau
Nonnendammallee 44
D-13629 BERLIN

Hausadresse:
OSRAM GmbH
Werk Berlin Spandau
Nonnendammallee 44
D-13629 BERLIN

Attachment 4 (BLV) Response B2

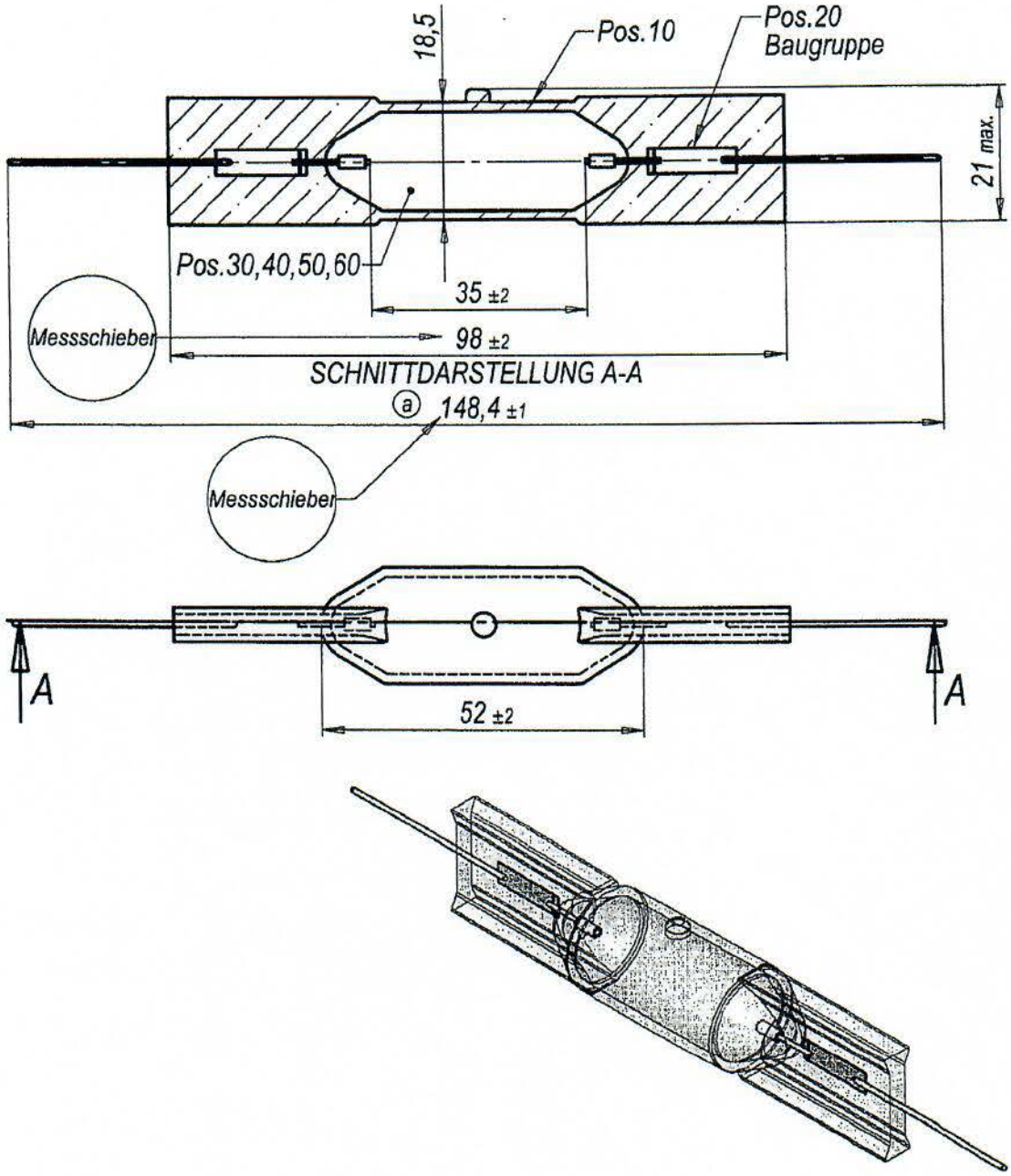

Vert.: AV,FB2,EE

Technische Änderungen vorbehalten
subject to be changed without prior notice

BLV Licht- und Vakuumtechnik GmbH Münchner Str. 10 85643 Steinhöring www.blv-licht.com Tel. 08094/906-0; Fax 08094/906-111	ISO 2768mH	ISO 1302	Maßstab 1 : 1 — 1-00/0019/23620000 Artikelnr.: 23620000
	Bearb. 04.09.06 Mohr Gepr. 11.9.06 Norm 11.9.06		Bezeichnung: MHL
a — OAL + Toleranz — 11.09.06 — MS Zust. — Änderung — Datum — Name			Zeichnungsnr.: 1-00-0019-00-0051 — Blatt1 — 1 Bl.

626487396

0626487396

DELIVERY NOTE

0012156265

Commercial contact : Air Liquide BV - National Tél: + 31 (0)40 2503503 Fax: + 31 (0)40 2503533 Email:	**DN: 626487396 Delivery date: 08/08/2016** **Order : 1274063029** **Ship-to:** 12156265 BLV LICHT- UND VAKUMTECHNIK GmbH MÜNCHENER STRASSE 10 85643 Steinhöring // Germany Tel: 08094906229 Unloading Point: PRINCIPAL
Distribution center: NL60	Sold To / Bill To : 12156265 / 12156265
Round:	Order: 04/08/16 Ref.: bestelnr 33169

Product code	Description	Unit Nb Delivered	Unit Nb Returned	Capacity Packed	Capacity Total
	Gases and related services:				
P9801XXX	MIXTURE CRYSTAL customized 1274063029 112311-2EX Ar + Kr85 18.5 MBq/l	5,0PCE	0		
IN P9999SXXXXA000	*# EMPTY PGM small Cylinder-10L*	*5,0*			
S0573	Express delivery	1,0			
	Delivery and related services:				
S0541	Delivery service fix part	1,0			
S7000	Delivery small & medium cylinder	5,0			
	Hazardous material fees:				
S0581	Hazardous Mat. Fee/delivery	1,0			

● SERVITRAX CODES:

5F3D5 / L55X36F / L56FAP / L55X343 / L55X2XF

Code SIREN : L56F4AP

The customer recognizes hereby that for the supplied goods, he has received from Air Liquide the safety data sheet, which has been established in accordance with the legislation in force. The customer takes note of the fact that at anytime this safety data sheet can be consulted and downloaded at www.airliquide.nl

Air Liquide Benelux Industries IM
Site Eindhoven
De Witbogt 1
5652 AG EINDHOVEN
T. +31 40 2503503
F. +31 40 2503059
nl-supplychain@airliquide.com
www.airliquide.nl

Delivery man signature: Delivery Hour:	Receiver signature:

Measuring of radiation levels of electron tubes with byproduct material

1. Measurement set up

   With a dose meter EG&G LB1236 the background intensity was measured with 0.06 µS over 0.49 hours = 0.122 µS per hour (see picture lower row). Background activity near Munich given by government measurement are 0.8-1.0 mSv per year (0.09 – 0.11 µSv per hour) which seems to be comparable. A yearly check report with an inhouse-radiation source sold from Berthold for this device is done.

With arc tube in a distance of 1 cm same measurement was done (see picture). In order to increase the sensitivity we filled this arc-tube with 800 mbar which is at least 20 times more than usual. In addition we omit the absorber but measurements were done in air.

The result is shown in the picture below that we have a dose of 0.13µS in 0.84 hour leading to dose rate of 0.155 µSv/h with arc-tube filled with 20 times higher activity than usually.

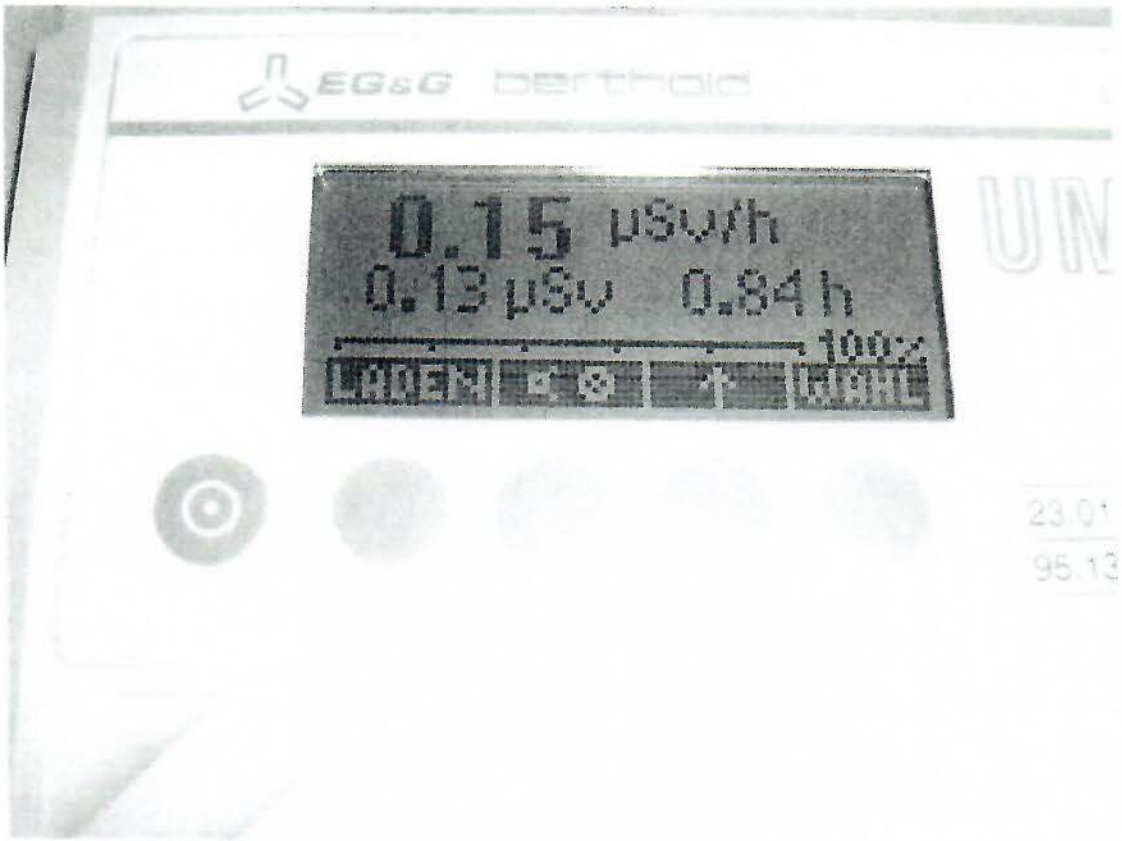

The difference is about 0.155-0.13µSv/h=0.025 µS/h. The dose conversion factor to the unit of rad is 100 rad/Sv. As a result we calculate 0.0025 mrad per hour which is far under the limit of 1 mrad for quartz lamp vessels filled with 20 times higher activity. Even under this condition one must be aware that natural occurring dose rates are six times higher meaning that normal lamp dose rates are around 50 times lower than natural dose rate.

Dr. Heinz-Jürgen Wesseling/11.10.2017

BLV/Development Department

IMPORTED AND DISTRIBUTED BY

SOLAR elements

Superior UV Technologies
25 Carriage Drive
Easton, CT 06612
(888) 526-7712

User Instructions

THE FOLLOWING INSTRUCTIONS ARE IN COMPLIANCE WITH 'POLICY ON LAMP COMPATIBILITY', 21 CFR 1040.20(e)(2)(iii)

Contraindication: This sunlamp product is contraindicated for use on persons under the age of 18 years.
Contraindication: This sunlamp product must not be used if skin lesions or open wounds are present.
Warning: This sunlamp product should not be used on individuals who have had skin cancer or have a family history of skin cancer.
Warning: Persons repeatedly exposed to ultraviolet sunlamp products should be regularly evaluated for skin cancer.

DANGER - Ultraviolet radiation. Follow instructions. Avoid overexposure. As with natural sunlight, overexposure can cause eye and skin injury and allergic reactions. Repeated exposure may cause premature aging of the skin and skin cancer. WEAR PROTECTIVE EYEWEAR; FAILURE TO MAY RESULT IN SEVERE BURNS OR LONG-TERM INJURY TO THE EYES. Medications or cosmetics may increase your sensitivity to the ultraviolet radiation Consult physician before using sunlamp if you are using medications or have a history of skin problems or believe yourself especially sensitive to sunlight. If you do not tan in the sun, you are unlikely to tan from use of this product.

Sunlamp - DANGER - Ultraviolet radiation. Follow instructions.
Use ONLY in fixture equipped with a timer.

Use ONLY in fixture equipped with the appropriate protective filter

ALWAYS FOLLOW INSTRUCTIONS ACCOMPANYING THE SUNLAMP PRODUCT TO AVOID AND MINIMIZE POTENTIAL INJURY! ALWAYS WEAR PROTECTIVE EYEWEAR!

USE THIS PRODUCT ONLY WHERE THE LAMP IS SPECIFIED AS A REPLACEMENT OR AS THE ORIGINAL EQUIPMENT PRODUCT BY THE MANUFACTURER!

Disconnect the fixture before removing and installing the lamp.

Follow the instructions for lamp installation provided in the equipment manual.

Do not touch the lamp with bare hands. Remove any spots or fingerprints with a clean soft cloth and alcohol.

This product is in conformity with the performance standards for Sunlamp products under 21 CFR 1040.20

Hg - THIS LAMP CONTAINS MERCURY. MANAGE IN ACCORDANCE WITH LOCAL DISPOSAL LAWS. SEE WWW.LAMP RECYCLE.ORG OR CALL 1-800-245-4458 FOR LOCAL RECYCLING INFORMATION

THIS PRODUCT CONTAINS Kr-85. THE PURCHASER IS EXEMPT FROM ANY REGULATORY REQUIREMENTS

PURCHASER SHOULD RETAIN THIS FORM FOR FUTURE REFERENCE

SOLAR elements

100915
400-500W
0120334-015

Made in Hungary
contains Kr-85 and Hg CE

25 Pieces

SOLAR
elements

100917
300-520W
0120334-015

Batch no.:21809111

Made in Hungary
contains Kr-85 and Hg

CE

LTH04002-P16-UVP-A16

Superior UV Technologies
Inventory Unit Activity Report
For the Period From Dec 1, 2017 to Dec 31, 2017

Filter Criteria includes: 1) IDs: Multiple IDs; 2) Stock/Assembly/Serialized. Report order is

Item ID	Item Description	UPC / SKU	Qty on Hand
BSEQ1000W/230V/GX	SEQ 1000WATT 230V GX12-1	100241	37
BSEQ1000W/230V/IS2	SEQ 1000-1400W IS2	100953	6
BSEQ1000W/230V/PI	SEQ 800-1000WATT PLUG-IN	100925	132
BSEQ1000W/230V/SB	SEQ 1000WATT STEP BASE	100928	19
BSEQ1000W/230V/SS	SEQ 1000-1400W 230V SS	100937	20
BSEQ1000W/230V/UP	SEQ 800-1000WATT 230V UP	100945	8
BSEQ1000W/230V/WL	SEQ 800-1000WATT WIRE LEAD	100926	20
BSEQ1000W/380V/WL	SEQ 1000WATT WIRE LEAD	100927	25
BSEQ1510W/230V/BL	SEQ 1510WATT BLADE	100929	23
BSEQ1530W/230V/PN	SEQ 1530WATT PIN	100930	21
BSEQ2000W/230V/WL	SEQ 2000WATT 230V WIRE LEAD	100931	6
BSEQ2000W/380V/WL	SEQ 2000WATT 380VOLT WIRELE/	100932a	12
BSEQ2000W/380V/XL	SEQ 2000WATT XL WIRE LEAD	100932b	5
BSEQ250W/230V/PI	SEQ 250W 230V PLUG-IN	100849	15
BSEQ400-500W/230V/CI	SEQ 400-500WATT CLIP-IN	100915	605
BSEQ400-500W/230V/WL	SEQ 400-500WATT WIRELEAD	100916	20
BSEQ500W/230V/PI	SEQ 300-520WATT PLUG-IN	100917	430
BSEQ600W/230/WL	SEQ 600WATT 230V WIRE LEAD	100922a	15
BSEQ600W/230V/UP	SEQ 600WATT 230V UP	100946	41
BSEQ610W/230V/BL	SEQ 610WATT BLADE	100918	15
BSEQ620W/230V/GX	SEQ 620W 230V GX12-1	100242	64
BSEQ620W/230V/SB	SEQ 620WATT 230V STEP BASE	100920	34
BSEQ620W/230V/SS	SEQ 620W 230V SS	100936	43
BSEQ630W/230V/PN	SEQ 630WATT PIN	100919	51
BSEQ650W/230V/IS2	SEQ 500-650W ROUND PIN (IS2)	100951	30
BSEQ650W/230V/PI	SEQ 650WATT PLUG-IN	100921	445
BSEQ650W/230V/WL	SEQ 650WATT WIRE LEAD	100922b	21
BSEQ800W/230V/CI	SEQ 800WATT 230V CLIP-IN	100924	60
BSEQ800W/230V/IS2	SEQ 800W ROUND PIN (IS2)	100952	1
BSEQ800W/230V/PI	SEQ 800WATT 230V PLUG-IN	100940	68
BSEQ900W/230V/PL	SEQ 900-1200W PLUG-IN	100943	27
			2319

Type	# Units
250W	15
400W	625
500W	430
600W	759
800W	129
1000W	338
2000W	23
	2319