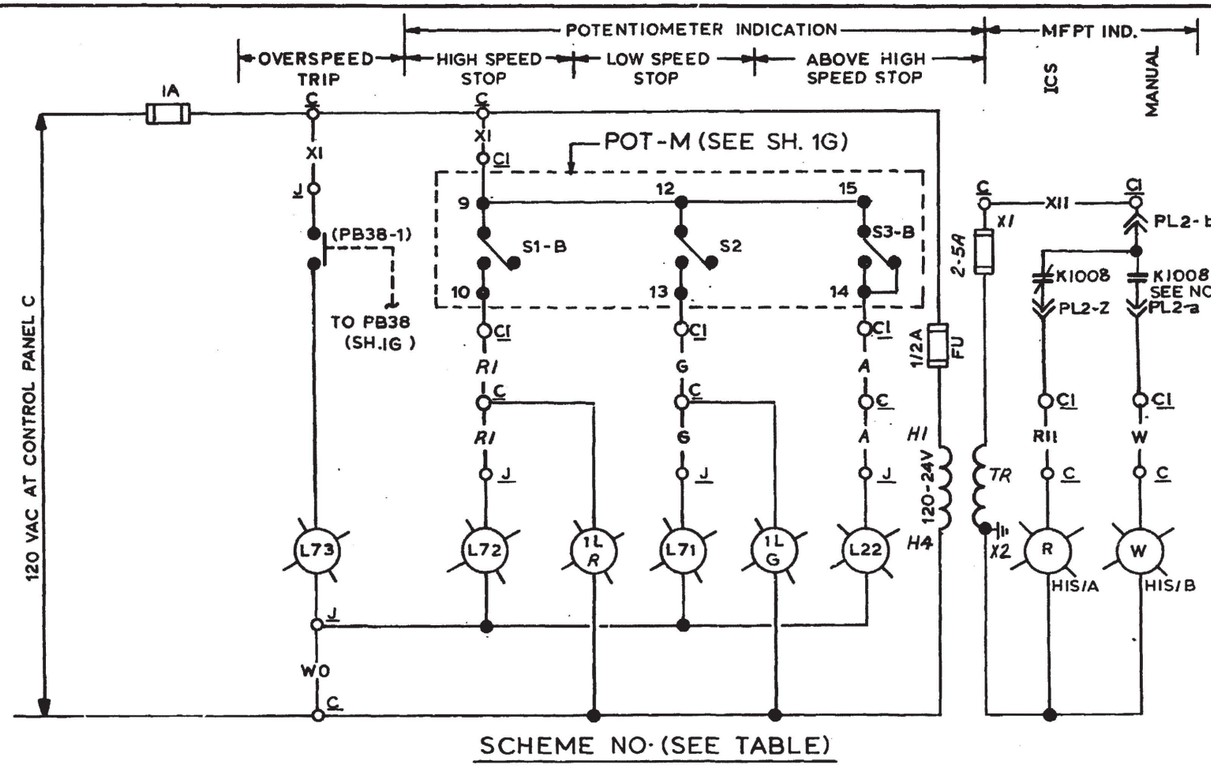

SCHEME NO. (SEE TABLE)

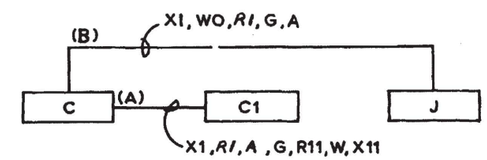

BLOCK DIAGRAM

NOTES:

1. FOR GENERAL NOTES SEE DWG. INDEX E-45B.
2. FOR REFERENCE VENDOR DRAWINGS SEE GE WIRING DIAGRAM 134B541BE SH. 28 (BECHTEL DRAWING 7749-M-38-134) AND GE SCHEMATIC DIAGRAM 509E481EX SH. 1 (BECHTEL DRAWING 7749-M-38-178). 1
3. RELAY (K1008) ENERGIZES IN MANUAL MODE.

SCHEME NO.	START UP NO.	CH. NO.	WIRE PREFIX AT MCB	EQUIPMENT			DESCRIPTION
				C	C1	J	
MFPT11	036	A	POTA	C5711	C5757D	JT2401	MFPT-1 CONTROL
MFPT21	036	B	POTB	C5711	C5757D	JT2301	MFPT-2 CONTROL

CONTROL TRANS.
TR
X-805
X-806

INDICATING LIGHTS					
GE NO.	INSTR. NO.	GE NO.	INSTR. NO.	HIS/A	HIS/B
IL R	IL805B	IL G	IL805A	HIS-805C1	HIS-805C2
IL R	IL806B	IL G	IL806A	HIS-806C1	HIS-806C2

REV.	DESCRIPTION	DATE	DR	CHK	SUPV	CHIEF	PROJ	OWNER	OWNER
1	"AS BUILT" FOR FCR 81-075 SUPP. 5 INC. DCN E-45B-75	1-26-87	JAD					—	—
0	"AS BUILT" FCR 81-075 INC. FCN 3637 & DCN E-458-47, E-45B-43	12-2-85	JAD					—	—

G-231-D

N49652

DAVIS-BESSE NUCLEAR POWER STATION

THE TOLEDO EDISON COMPANY
THE CLEVELAND ELECTRIC ILLUMINATING COMPANY

ELEMENTARY WIRING DIAGRAM
AFPT & MFPT CONTROL AUXILIARIES
MFPT CONTROL

BECHTEL COMPANY	JOB NO.	DRAWING NO.	REV.
	7749	E-45B SH-1F	1

REV.	DESCRIPTION	DATE	DR	CHK	SUPV	CHIEF	PROJ	OWNER	OWNR
0	"AS BUILT" FOR FCR 81-075 SUPPL 2.	9/10/86	G.S.	SRD		—	N.I.	—	—

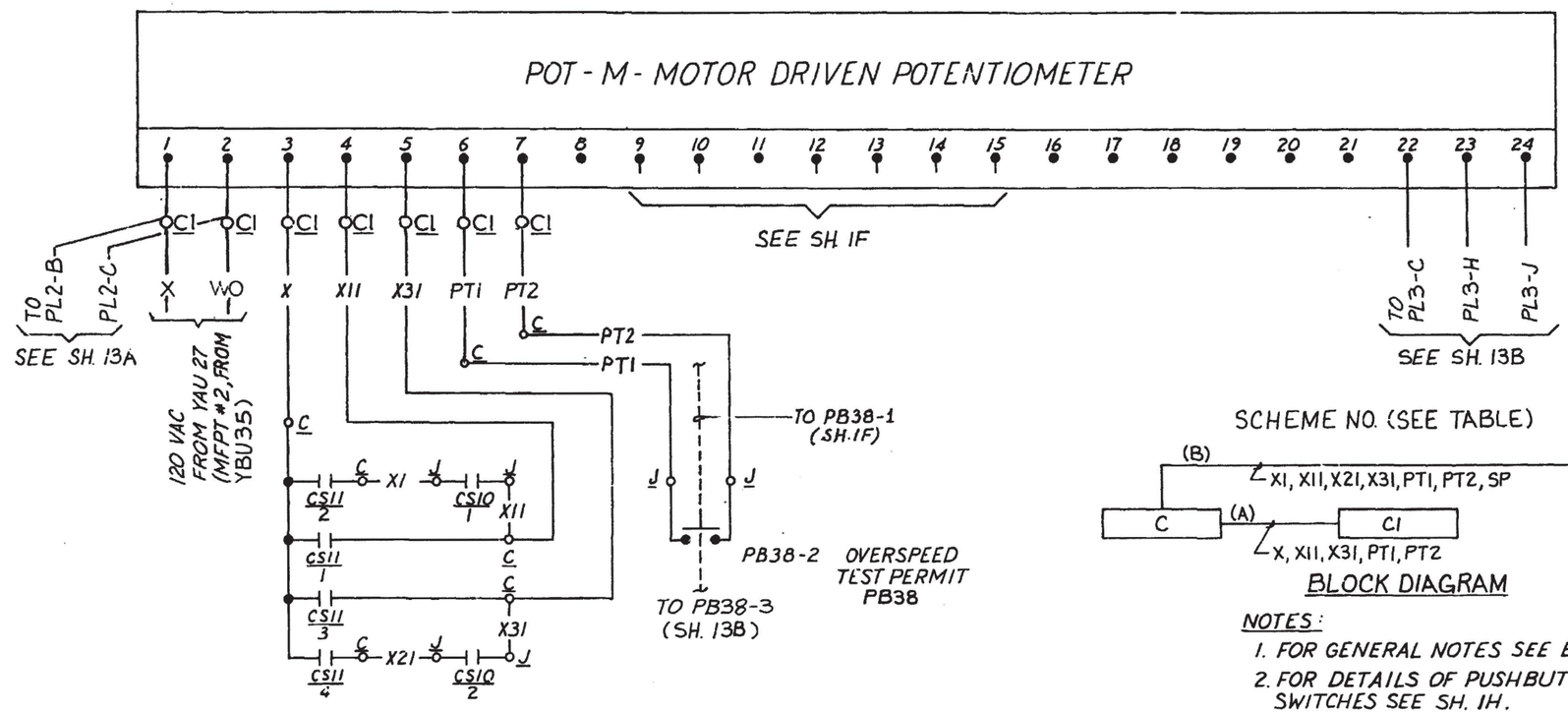

SCHEME NO. (SEE TABLE)

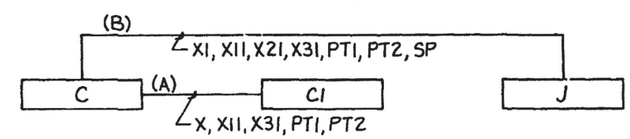

BLOCK DIAGRAM

NOTES:

1. FOR GENERAL NOTES SEE E-45B INDEX.
2. FOR DETAILS OF PUSHBUTTON & CONTROL SWITCHES SEE SH. 1H.
3. REF. VENDOR DWG. G.E. 134B541BE SH. 28 BECHTEL NO. 12501-G-CS-78.

SCHEME NO.	S.U. NO.	CH.	WIRE PREFIX AT MCB	EQUIPMENT			CS11		DESCRIPTION
				C	C1	J	INSTR. NO.	G.E. NO.	
MFPT12	036	A	SCA	C5711	C5757D	JT2401	HS-805D	CS11	MFPT-1 CONTROL
MFPT22	036	B	SCB	C5711	C5757D	JT2301	HS-806D	CS11	MFPT-2 CONTROL

DAVIS-BESSE NUCLEAR POWER STATION

THE TOLEDO EDISON COMPANY
THE CLEVELAND ELECTRIC ILLUMINATING COMPANY

ELEMENTARY WIRING DIAGRAM

AFPT & MFPT CNTRL AUXILIARIES
MFPT CONTROL

BECHTEL COMPANY	JOB NO.	DRAWING NO.	REV.
	7749	E-45B SH.-1G	0

G-231-D

N49652

TRANSFER SW. CS11
(LOCATED ON CONTROL PANEL C5711)

HS-805D (HS-806D)

CONTACTS (HANDLE END) ODD	EVEN	CONTACT	POSITION INCREASE		DECREASE
1	2	1	X		
		2		X	
3	4	3			X
		4		X	

X DENOTES CONTACT CLOSED.
SPRING RETURN TO 12 O'CLOCK POSITION.

CS10 (TURBINE MOUNTED)

CONTACTS (HANDLE END) ODD	EVEN	CONTACT	POSITION INCREASE		DECREASE
1	2	1	X		
		2			X

X DENOTES CONTACT CLOSED.
SPRING RETURN TO 12 O'CLOCK POSITION.

OVERSPEED TEST
PERMIT PUSHBUTTON (BY GE. TURBINE MOUNTED)

PB38

BLOCK	CONTACTS	NORMAL	TEST
1		X	
			X
2		X	
			X
3		X	
			X
4		X	
			X

MOMENTARY CONTACT PUSHBUTTON
GE TYPE CR2940 FORM UA200C
WITH TANDEM BLOCK (U207).
X DENOTES CONTACT CLOSED.

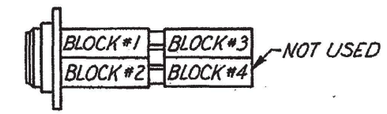

PB38 BLOCK ARRANGMENT

CS11 (CS10)

GE CO. TYPE SBM, CAM-OPERATED,
3 POSITION, SPRING RETURN
WITH PISTOL GRIP HANDLE.

ICS
(MAN)

HIS/A PB. HIS-805C1 (HIS-806C1)
HIS/B PB. HIS-805C2 (HIS-806C2)
(LOC. AT PANEL C5711)

CONTACTS	FREE	DEPRESSED
5–6	X	
5–7		X
14–15	X	
14–16		X

MOMENTARY CONTACT
STACO SWITCH - LIGHTED
DISPLAY PUSHBUTTON, SERIES 40

NOTE:
1. FOR GENERAL NOTES SEE E-45B INDEX

CS/C - HS803 (HS804) 2
LOC. AT PANEL C5711

CONTACTS	↖	↑	↗
1	X		
2			X
3	X		
4			X

MOMENTARY CONTACT PUSHBUTTON
GE TYPE CR2940 FORM US203A

CS/R - HS 799 (HS 800)
LOC. AT PANEL C5711

CONTACTS	NORMAL	RESET AUTO
1	X	
2		X
3	X	
4		X
5	X	
6		X

MOMENTARY CONTACT PUSHBUTTON
GE TYPE CR2940 FORM WA203E.

REV.	DESCRIPTION	DR	CHK	SUPV	CHIEF	PROJ	OWNER	OWNER
2	INC. DCN E-45B-200 PER ECR 04-0339-00 (CR 02-09678)	JOR 9/15/86	SBW TRG	TRG	—	—	—	—
1	INC. DCN E-45B-183 FOR SCC/PEA 89-0023	GFB 10/17/86	GRB		—	P.J.B.	—	—
0	"AS BUILT" FOR FCR 81-015 SUPPL. 2.	GS 9/10/86	GRB		—		—	—

G-231-D

N49652

DAVIS-BESSE NUCLEAR POWER STATION
THE TOLEDO EDISON COMPANY
THE CLEVELAND ELECTRIC ILLUMINATING COMPANY

ELEMENTARY WIRING DIAGRAM
AFPT & MFPT CNTRL AUXILIARIES
MFPT CONTROL

BECHTEL COMPANY	JOB NO.	DRAWING NO.	REV.
	7749	E-45B SH-1H	2

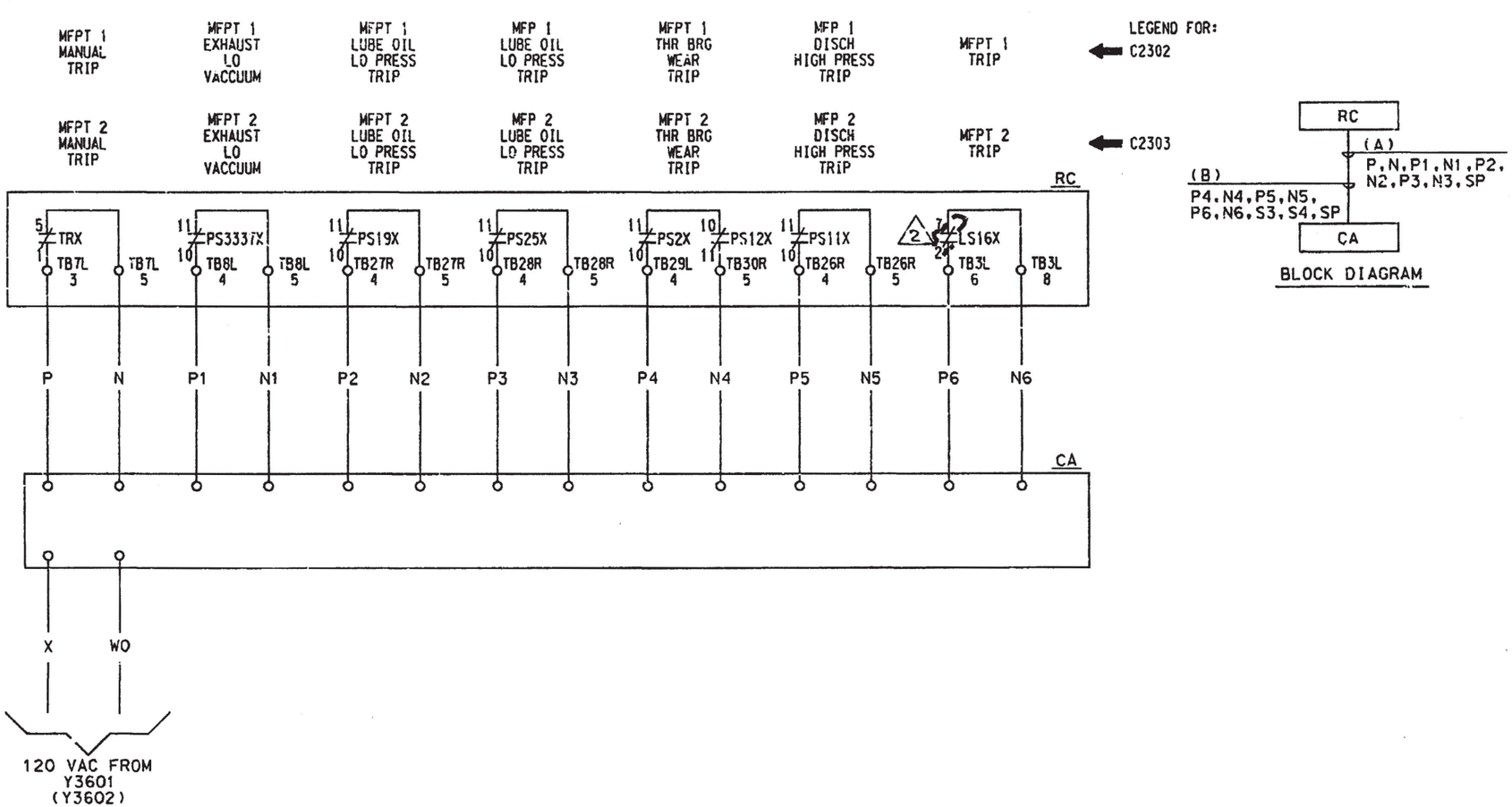

SCHEME	EQUIPMENT		DIST PANEL	CHANNEL	S.U. NO.
	RC	CA			
MFPT16	RC2404	C2302	Y3601	A	036B
MFPT26	RC2304	C2303	Y3602	B	036B

DAVIS-BESSE NUCLEAR POWER STATION

THE TOLEDO EDISON COMPANY
THE CLEVELAND ELECTRIC ILLUMINATING COMPANY

ELEMENTARY WIRING DIAGRAM
MFPT LOCAL ANNUNCIATION

JOB NO.	DRAWING NO.	REV.
7749	E-45B SH1K	2

DB 12-19-89 DFN=F:/EL/E45BSH1K.DGN

REV.	DESCRIPTION	DATE	DR	CHK	SUPV	CHIEF	PROJ	OWNER	OWNER
2	"AS-BUILT" FOR DCR 89-0194 INC. DCN E-45B-179	11-7-88	GS	RWF/BN	LVrook.JY	—	VM	—	—
1	"AS-BUILT" FOR FCR 85-203,REV.A,SUPP.4;INC. DCN E-45B-112	9-5-86							
0	ISSUED FOR FCR 85-203								

INITIALS ON FILE

JLH

NEWFAX 3/85 N58313 ED 7469

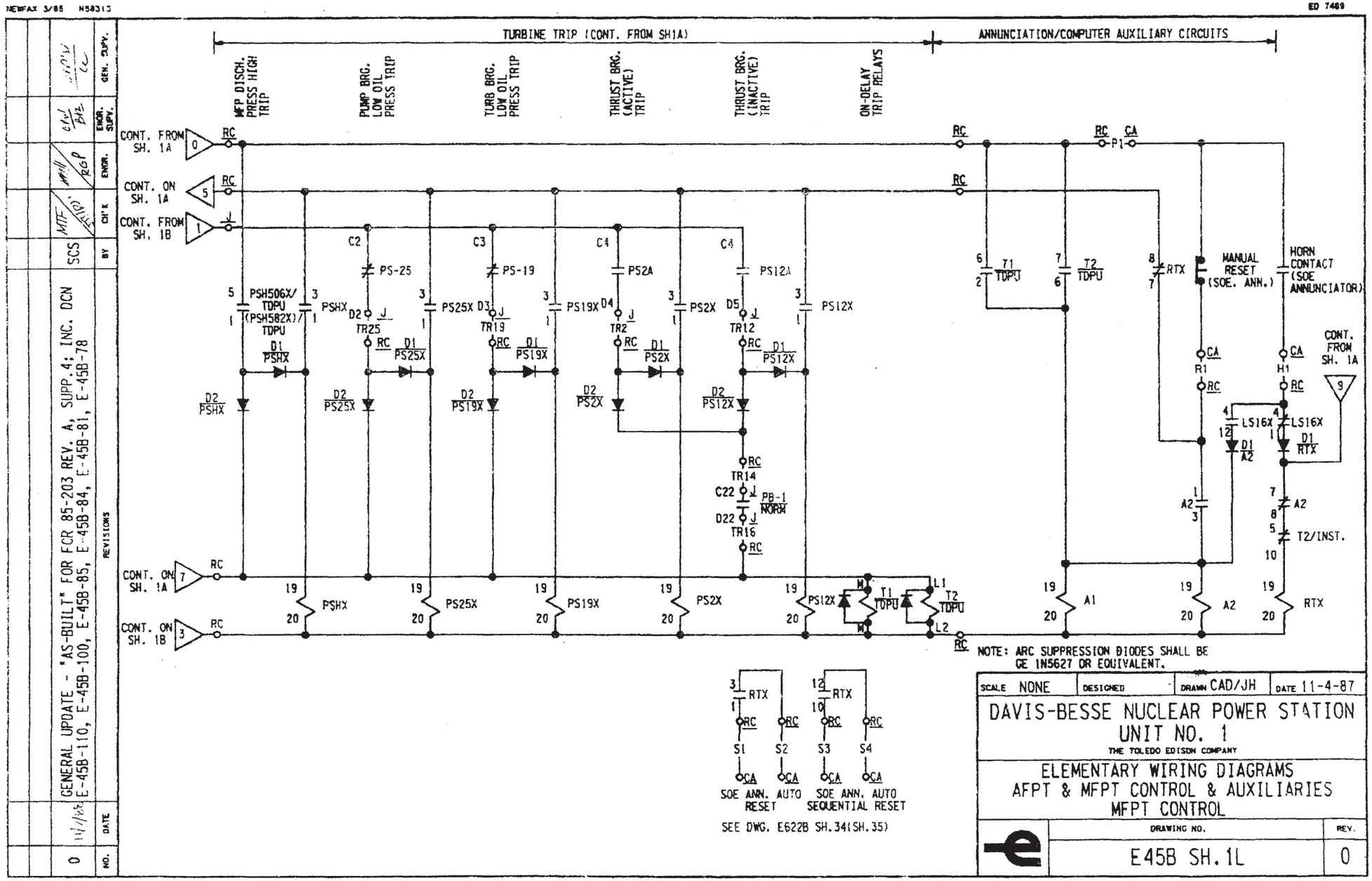

I CERTIFY THAT THE IMAGE CONTAINED ON THIS FRAME WAS MADE IN THE NORMAL AND REGULAR COURSE OF BUSINESS, ON THE DATE STATED BELOW AND THAT IT IS AN ACCURATE REPRODUCTION OF THE RECORD(S) SUBMITTED TO NUCLEAR RECORDS MANAGEMENT.

DATE 11-11-88 OPERATOR A. Weibel 16X

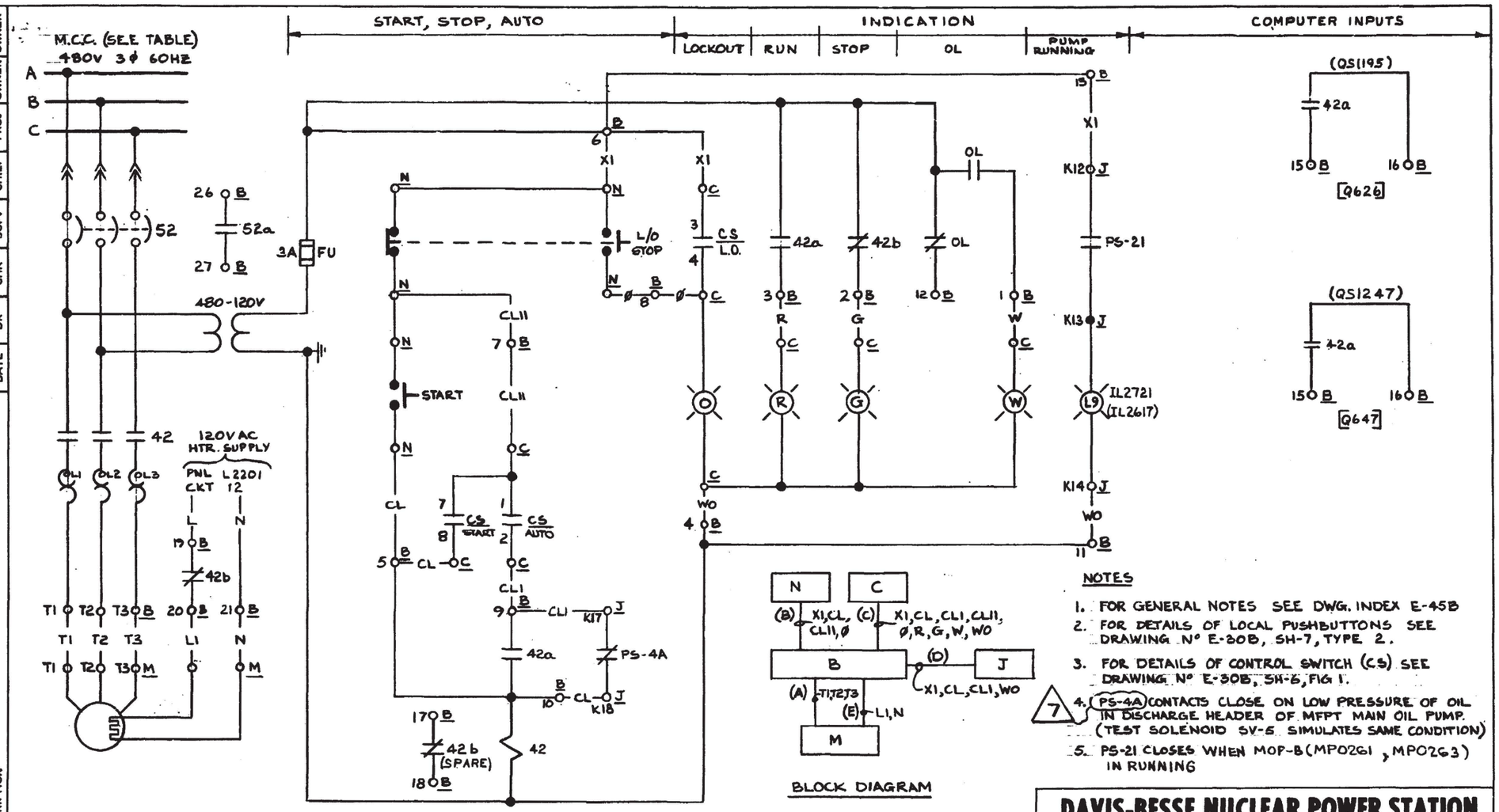

NOTES

1. FOR GENERAL NOTES SEE DWG. INDEX E-45B
2. FOR DETAILS OF LOCAL PUSHBUTTONS SEE DRAWING Nº E-30B, SH-7, TYPE 2.
3. FOR DETAILS OF CONTROL SWITCH (CS) SEE DRAWING Nº E-30B, SH-6, FIG 1.
4. (PS-4A) CONTACTS CLOSE ON LOW PRESSURE OF OIL IN DISCHARGE HEADER OF MFPT MAIN OIL PUMP. (TEST SOLENOID SV-5 SIMULATES SAME CONDITION) (7)
5. PS-21 CLOSES WHEN MOP-B (MP0261, MP0263) IN RUNNING

NOTES CONT.

6. ADD LOCAL CONTROL SWITCH GUARD ASSEMBLY PER E-302A SH. 185A & B TO SWITCH NP0261, NP0263.

SCHEME Nº	START UP Nº	CHAN'L	WIRE PREFIX	M.C.C.	CS			EQUIPMENT C	B	M	N	J			PRESSURE SWITCHES INSTR. Nº	G.E. Nº	INSTR. Nº	G.E. Nº	DESCRIPTION
BE3266	036	A	MOA	E32B	HS1195			C5711	BE3266	MP0261	NP0261	JT2401			PSL1215	PS4A	PSH2721	PS21	MFPT 1-1 MAIN OIL PUMP 1-1-1
BE3272	036	A	MOC	E32B	HS1236			C5711	BE3272	MP0263	NP0263	JT2301			PSL1238	PS4A	PSH2617	PS21	MFPT 1-2 MAIN OIL PUMP 1-2-1

REV.	DESCRIPTION
6	AS-BUILT FOR FCR. 87-075 REV. A, INC DCN E-45B-114
7	"AS BUILT" FOR DCR 88-329, INC. DCN E-45B-148
0	ISSUED FOR CONSTRUCTION

OWNER | OWNER | PROJ | CHIEF | SUPV | CHK | DR | DATE

G-231-D

DAVIS-BESSE NUCLEAR POWER STATION

THE TOLEDO EDISON COMPANY
THE CLEVELAND ELECTRIC ILLUMINATING COMPANY

ELEMENTARY WIRING DIAGRAMS
MFPT CONTROL & AUXILIARIES
MFPT MAIN OIL PUMPS

BECHTEL COMPANY	JOB NO.	DRAWING NO.	REV.
	7749	E-45B SH-2A	7

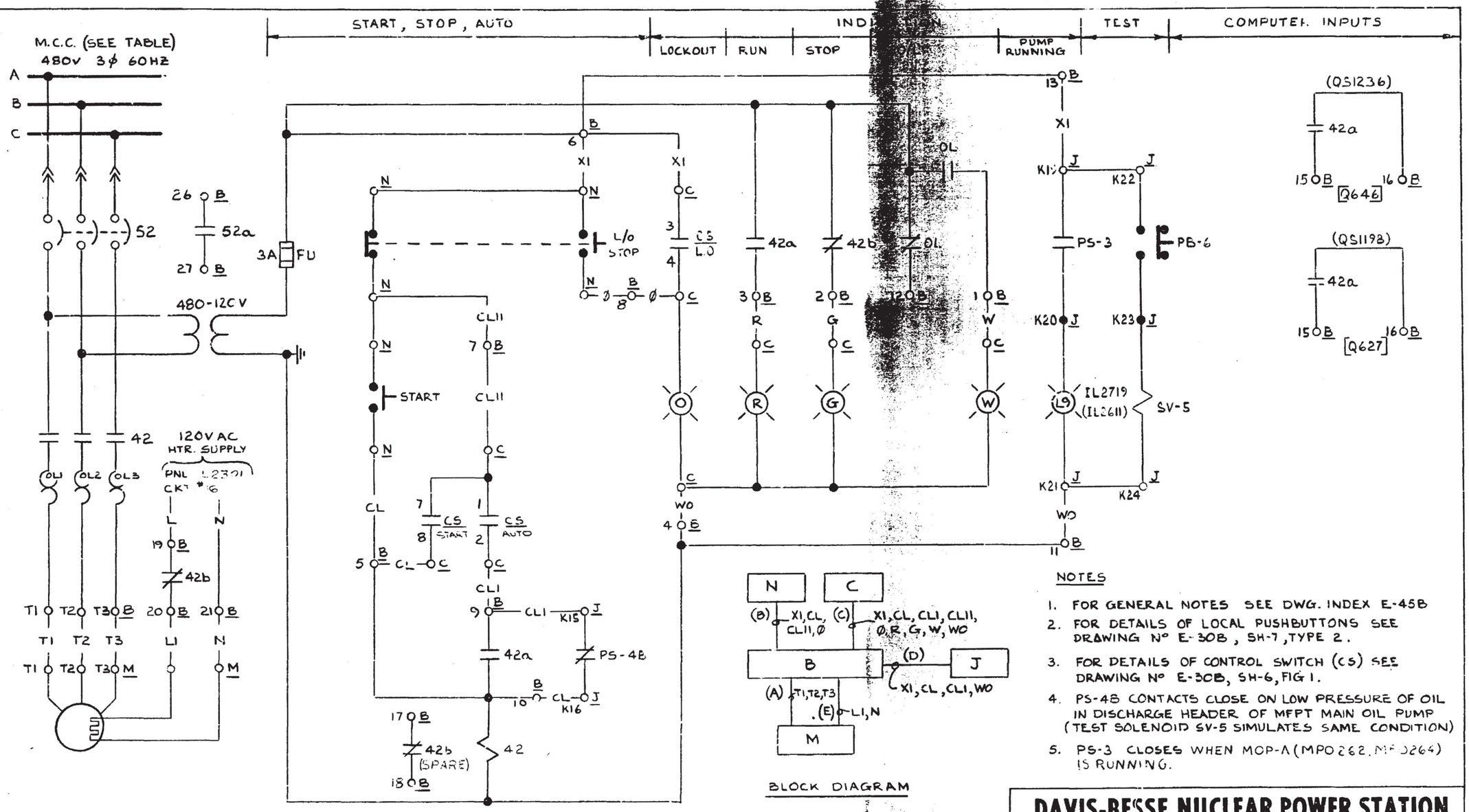

BLOCK DIAGRAM

NOTES

1. FOR GENERAL NOTES SEE DWG. INDEX E-45B
2. FOR DETAILS OF LOCAL PUSHBUTTONS SEE DRAWING Nº E-30B, SH-7, TYPE 2.
3. FOR DETAILS OF CONTROL SWITCH (CS) SEE DRAWING Nº E-30B, SH-6, FIG 1.
4. PS-4B CONTACTS CLOSE ON LOW PRESSURE OF OIL IN DISCHARGE HEADER OF MFPT MAIN OIL PUMP (TEST SOLENOID SV-5 SIMULATES SAME CONDITION)
5. PS-3 CLOSES WHEN MOP-A (MPO262, MPO264) IS RUNNING.

NOTES CONT.

6. ADD LOCAL CONTROL SWITCH [illegible] ASSEMBLY PER E-302A SH. 155A & B TO SWITCH NPO262, NPO264

SCHEME Nº	START UP Nº	CHAN'L	WIRE PREFIX	M.C.C	CS	EQUIPMENT C	EQUIPMENT B	EQUIPMENT M	EQUIPMENT N	EQUIPMENT J	TEST FB INSTR. Nº	TEST FB G.E. Nº	TEST SOLENOID INSTR. Nº	TEST SOLENOID G.E. Nº	PRESSURE SWITCHES INSTR. Nº	PRESSURE SWITCHES G.E. Nº	PRESSURE SWITCHES INSTR. Nº	PRESSURE SWITCHES G.E. Nº	DESCRIPTION
BF3266	036	B	MOB	F32B	HIS1198	CS711	BF3266	MPO262	NPO262	JT2401	HIS1199	PB6	SV1199	SV5	PSH271[illegible]	PS3	[illegible]	PS4B	MFPT 1-1 MAIN OIL PUMP 1-1-2
BF3272	036	B	MOD	F32B	HIS1247	CS711	BF3272	MPO264	NPO264	JT2301	HIS1237	PB7	SV1237	SV5	PSH2[illegible]	PS3	[illegible]	PS4B	MFPT 1-2 MAIN OIL PUMP 1-2-2

REV.	DESCRIPTION	DATE	DR	CHK	SUPV	CHIEF	PROJ	OWNER	OWNER
10	[illegible]	[illegible]	[illegible]	[illegible]	[illegible]	[illegible]	[illegible]	[illegible]	[illegible]
9	AS BUILT FOR UCR 89-329, INC. DCN E-45B-149	10/29/79	S.J.H.	MC/KS	S.K.	[illegible]	[illegible]	[illegible]	[illegible]
0	ISSUED FOR CONSTRUCTION		ETL	ETL	[illegible]	[illegible]	[illegible]	[illegible]	[illegible]

DAVIS-BESSE NUCLEAR POWER STATION

THE TOLEDO EDISON COMPANY
THE CLEVELAND ELECTRIC ILLUMINATING COMPANY

ELEMENTARY WIRING DIAGRAMS
MFPT CONTROL & AUXILIARIES
MFPT MAIN OIL PUMPS

BECHTEL COMPANY

JOB NO	DRAWING NO.	REV.
7749	E-45B SH-2B	10

G-231-D

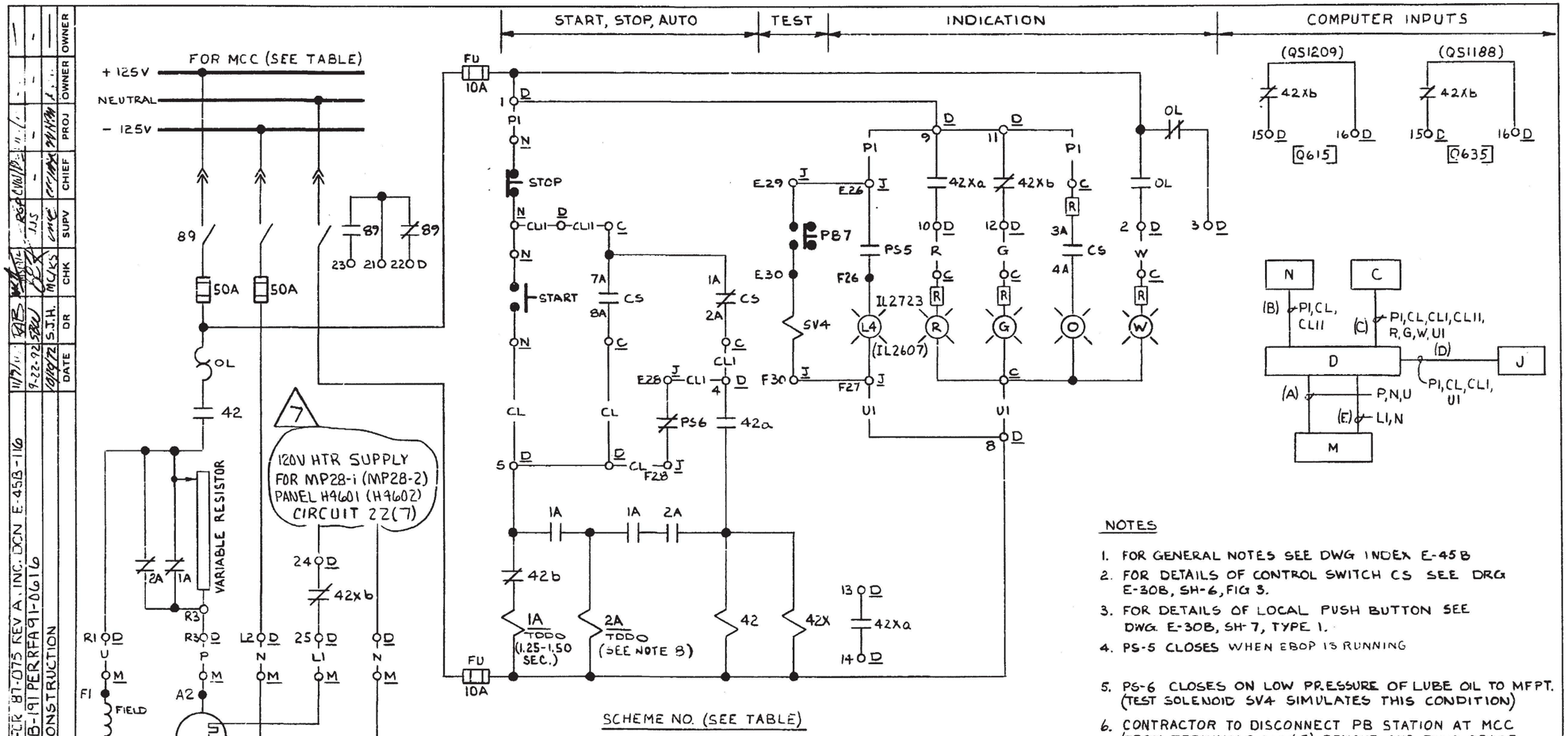

NOTES

1. FOR GENERAL NOTES SEE DWG INDEX E-45B
2. FOR DETAILS OF CONTROL SWITCH CS SEE DRG E-30B, SH-6, FIG 3.
3. FOR DETAILS OF LOCAL PUSH BUTTON SEE DWG. E-30B, SH-7, TYPE 1.
4. PS-5 CLOSES WHEN EBOP IS RUNNING
5. PS-6 CLOSES ON LOW PRESSURE OF LUBE OIL TO MFPT. (TEST SOLENOID SV4 SIMULATES THIS CONDITION)
6. CONTRACTOR TO DISCONNECT PB STATION AT MCC (FROM TERMINALS 1, 1A & 5), REMOVE AND PLUG SPACE.
7. RESISTORS ARE 4K Ω, 3¼ W.
8. RELAY 2A NOT USED IN CONTROLS. SET AT 3.5 SEC.

NOTES CONT.

9. ADD LOCAL CONTROL SWITCH GUARD ASSEMBLY PER E-30ZA SH. 185A & B TO SWITCH NP0281, NP0282

SCHEME Nº	START UP Nº	CHANNEL	WIRE PREFIX	MCC	CS	EQUIPMENT C	EQUIPMENT D	EQUIPMENT M	EQUIPMENT N	EQUIPMENT J	PRESSURE SWITCHES INSTR Nº	PRESSURE SWITCHES G.E. Nº	PRESSURE SWITCHES INSTR. Nº	PRESSURE SWITCHES G.E. Nº	TEST SV INSTR. Nº	TEST SV G.E. Nº	DESCRIPTION
D115	036	A	EA	D1	HI51209	C5711	D115	MP0281	NP0281	JT2401	PSL1222	PS6	PSH2723	PS5	SV1210	SV4	MFPT 1 EBOP
D215	036	B	EB	D2	HI51188	C5711	D215	MP0282	NP0282	JT2801	PSL1233	PS6	PSH2607	PS5	SV1231	SV4	MFPT 2 EBOP

DAVIS-BESSE NUCLEAR POWER STATION

THE TOLEDO EDISON COMPANY
THE CLEVELAND ELECTRIC ILLUMINATING COMPANY

ELEMENTARY WIRING DIAGRAMS
MFPT CONTROL & AUXILIARIES
MFPT. EBOP.

BECHTEL COMPANY	JOB NO.	DRAWING NO.	REV.
	7749	E-45B SH-3	7

REV.	DESCRIPTION	DATE	DR	CHK	SUPV	CHIEF	PROJ	OWNER	OWNER
6	AS-BUILT FOR FCR 87-075 REV A. INC. DCN E-45B-116	11/7/11	RAB	MCKS	TJS				
7	INC. DCN E-45B-191 PER RFA91-0616	9-22-92	SJH						
0	ISSUED FOR CONSTRUCTION	10/19/72	S.J.H.						

G-231-D

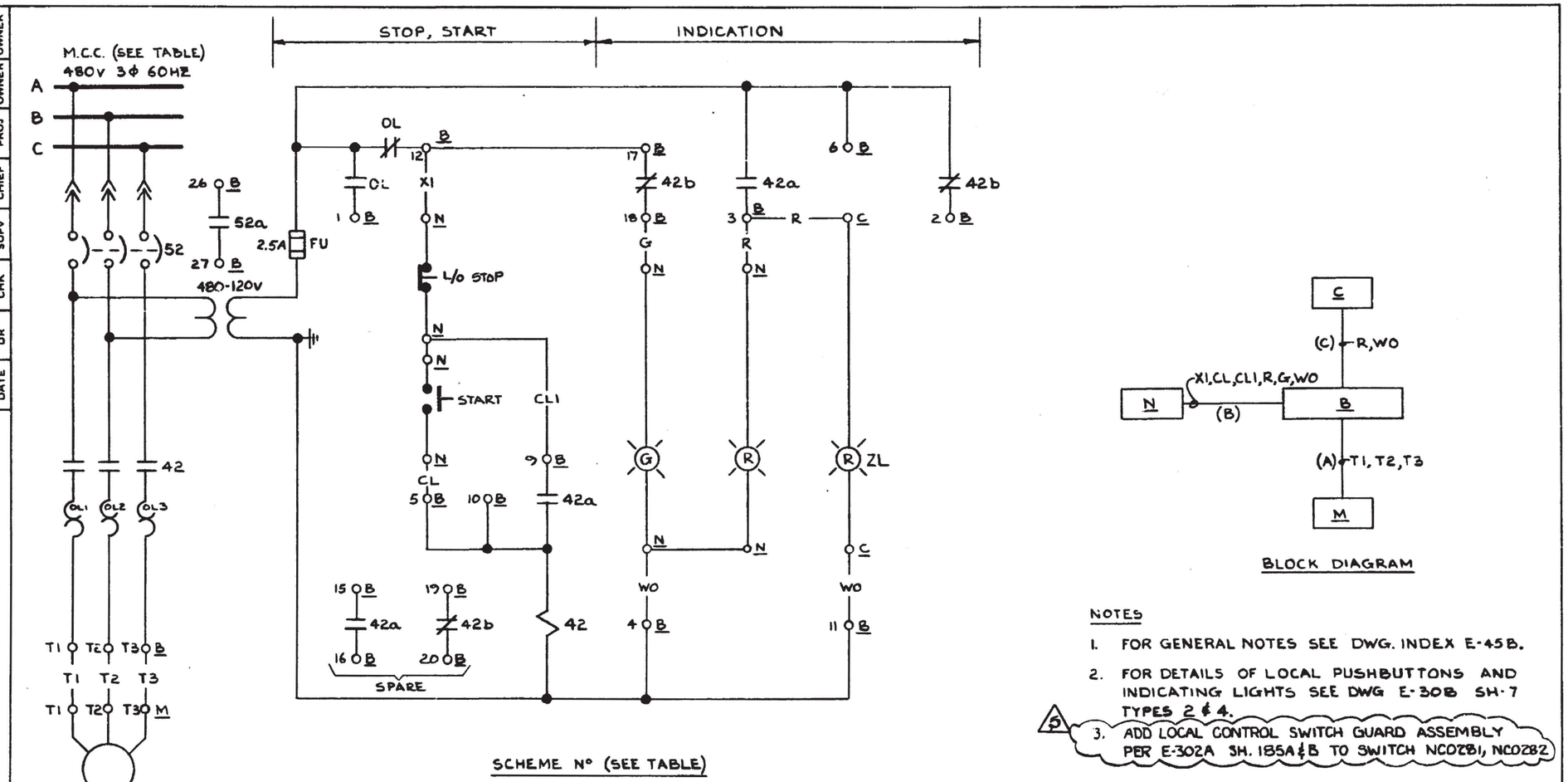

NOTES

1. FOR GENERAL NOTES SEE DWG. INDEX E-45B.
2. FOR DETAILS OF LOCAL PUSHBUTTONS AND INDICATING LIGHTS SEE DWG E-30B SH-7 TYPES 2 & 4.
3. ADD LOCAL CONTROL SWITCH GUARD ASSEMBLY PER E-302A SH. 185A & B TO SWITCH NC0281, NC0282.

SCHEME Nº	START UP Nº	CHANNEL	WIRE PREFIX	M.C.C	EQUIPMENT B	EQUIPMENT M	EQUIPMENT N	EQUIPMENT C	ZL	DESCRIPTION
BE3264	036	A	VA	E32B	BE3264	MC0281	NC0281	CS711	ZL1187	MFPT 1-1 OIL TANK VAPOR EXTRACTOR
BF3264	036	B	VB	F32B	BF3264	MC0282	NC0282	CS711	ZL1213	MFPT 1-2 OIL TANK VAPOR EXTRACTOR

REV.	DESCRIPTION	DATE	DR	CHK	SUPV	CHIEF	PROJ	OWNER	OWNER
5	AS-BUILT FOR FCR 87-075 REV. A, INC DCN E-45B-117	11/7/89	RAB	MC/KS	RAB	CWU/RAB			
1	REVISED AS NOTED	6/16/73	MS	MC/KS					
0	ISSUED FOR CONSTRUCTION	10/24/72	SJH	MC/KS					

G-231-D

DAVIS-BESSE NUCLEAR POWER STATION

THE TOLEDO EDISON COMPANY
THE CLEVELAND ELECTRIC ILLUMINATING COMPANY

ELEMENTARY WIRING DIAGRAMS

MFPT CONTROL & AUXILIARIES
MFPT OIL TANK VAPOR EXTRACTORS

BECHTEL COMPANY	JOB NO.	DRAWING NO.	REV.
	7749	E-45B SH-4	5

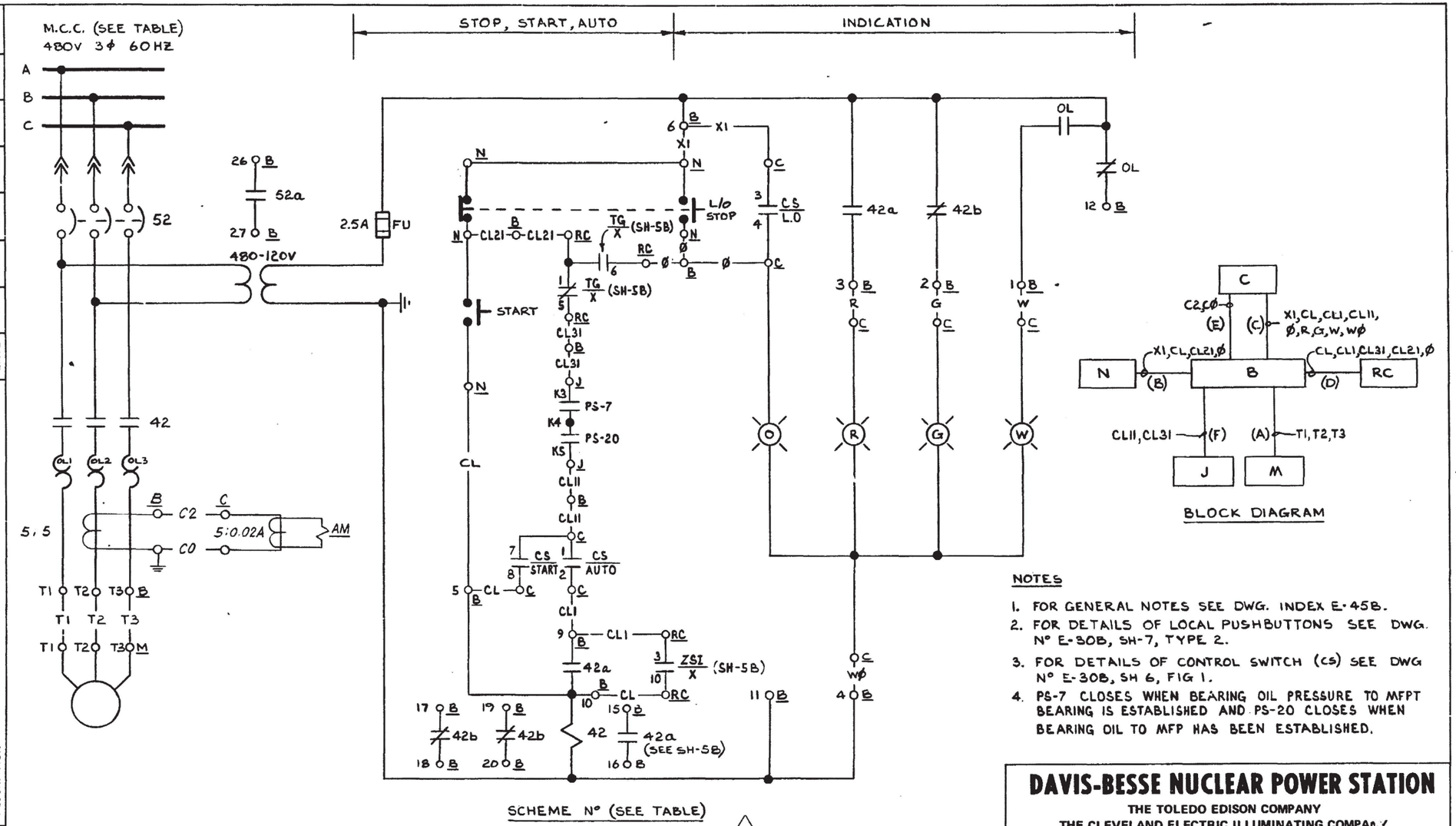

NOTES

1. FOR GENERAL NOTES SEE DWG. INDEX E-45B.
2. FOR DETAILS OF LOCAL PUSHBUTTONS SEE DWG. Nº E-30B, SH-7, TYPE 2.
3. FOR DETAILS OF CONTROL SWITCH (CS) SEE DWG Nº E-30B, SH 6, FIG 1.
4. PS-7 CLOSES WHEN BEARING OIL PRESSURE TO MFPT BEARING IS ESTABLISHED AND PS-20 CLOSES WHEN BEARING OIL TO MFP HAS BEEN ESTABLISHED.

7

SCHEME Nº	START UP Nº	CHANNEL	WIRE PREFIX	M.C.C.	CS	EQUIPMENT C	B	M	N	RC	J	PRESS. SW PS7	PS20	AM	DESCRIPTION
BE 3270	036	A	TA	E 32B	H151234A	C5711	BE3270	MK0071	NK0071	RC2404	JT2401	PSL1217	PSL2552	II1234	MFPT 1-1 TURNING GEAR MOTOR
BF 3270	036	B	TB	F 32B	H151221A	C5711	BF3270	MK0072	NK0072	RC2304	JT2301	PSL1260	PSL2553	II1221	MFPT 1-2 TURNING GEAR MOTOR

REV.	DESCRIPTION	DATE	DR	CHK	SUPV	CHIEF	PROJ	OWNER	OWNER
7	INC DCN E-45B-178 FOR DCR 89-232	10/5/90	GFB	MJ	CW				
6	"AS BUILT" FOR DCR 88-515, INC. DCN E-458-153	7/17/89	ETL	MJ	SB				
0	ISSUED FOR CONSTRUCTION	10/19/72	SJH	MC/KS					

DAVIS-BESSE NUCLEAR POWER STATION

THE TOLEDO EDISON COMPANY
THE CLEVELAND ELECTRIC ILLUMINATING COMPANY

ELEMENTARY WIRING DIAGRAMS

MFPT CONTROL & AUXILIARIES
MFPT TURNING GEAR MOTOR

BECHTEL COMPANY	JOB NO.	DRAWING NO.	REV.
	7749	E-45B SH-5A	7

G-231-D

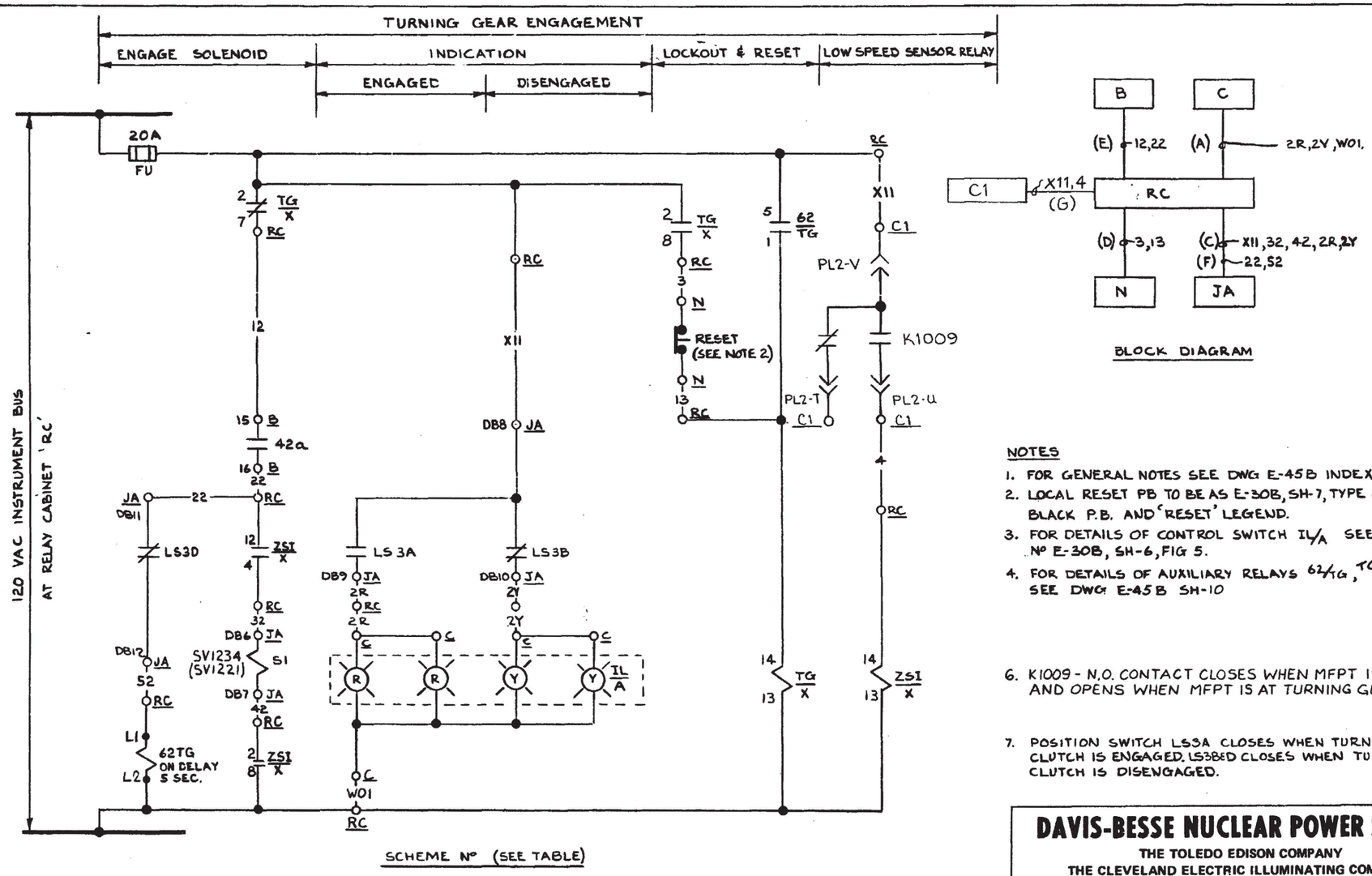

BLOCK DIAGRAM

NOTES

1. FOR GENERAL NOTES SEE DWG E-45B INDEX.
2. LOCAL RESET PB TO BE AS E-30B, SH-7, TYPE 6 WITH BLACK P.B. AND 'RESET' LEGEND.
3. FOR DETAILS OF CONTROL SWITCH IL/A SEE DWG. Nº E-30B, SH-6, FIG 5.
4. FOR DETAILS OF AUXILIARY RELAYS 62/TG, TG/X & ZSI/X SEE DWG E-45B SH-10
6. K1009 - N.O. CONTACT CLOSES WHEN MFPT IS AT REST AND OPENS WHEN MFPT IS AT TURNING GEAR SPEED.
7. POSITION SWITCH LS3A CLOSES WHEN TURNING GEAR CLUTCH IS ENGAGED. LS3B&D CLOSES WHEN TURNING GEAR CLUTCH IS DISENGAGED.

SCHEME Nº	S.U. Nº	CHANNEL	WIRE PREFIX	IL/A	EQUIPMENT C	B	N	RC		JA	C1		POS'N SWITCH INSTR. Nº	G.E. Nº					DESCRIPTION
MFPT07	036	A	TEA	IL1234B	C5711	BE3270	NK0071	RC2404		JT2403	C5757D		252737A	LS3A,3B					MFPT-1 TURN. GEAR MTR. CTRL.
MFPT08	036	B	TEB	IL1221B	C5711	BF3270	NK0072	RC2304		JT2303	C5757D		252747A	LS3A,3B					MFPT-2 TURN. GEAR MTR. CTRL.

7

REV.	DESCRIPTION	DR	CHK	SUPV	CHIEF	PROJ	OWNER	OWNER
6	INC. DCN E-45B-151 PER DCR 88-0432	SJH 9-22-92	MEIKS	JJS	—	—	—	—
7	INC. DCN E-45B-176 PER DDR 98-1312	SJH 11-3-98	MEIKS	JJS	—	—	—	—
0	ISSUED FOR CONSTRUCTION	SJH 10/9/72	MEIKS	JJS	—	—	—	—

G-231-D

DAVIS-BESSE NUCLEAR POWER STATION

THE TOLEDO EDISON COMPANY
THE CLEVELAND ELECTRIC ILLUMINATING COMPANY

ELEMENTARY WIRING DIAGRAMS
MFPT CONTROL & AUXILIARIES
MFPT TURNING GEAR MOTOR CONTROL

BECHTEL COMPANY	JOB NO.	DRAWING NO.	REV.
	7749	E-45B SH-5B	7

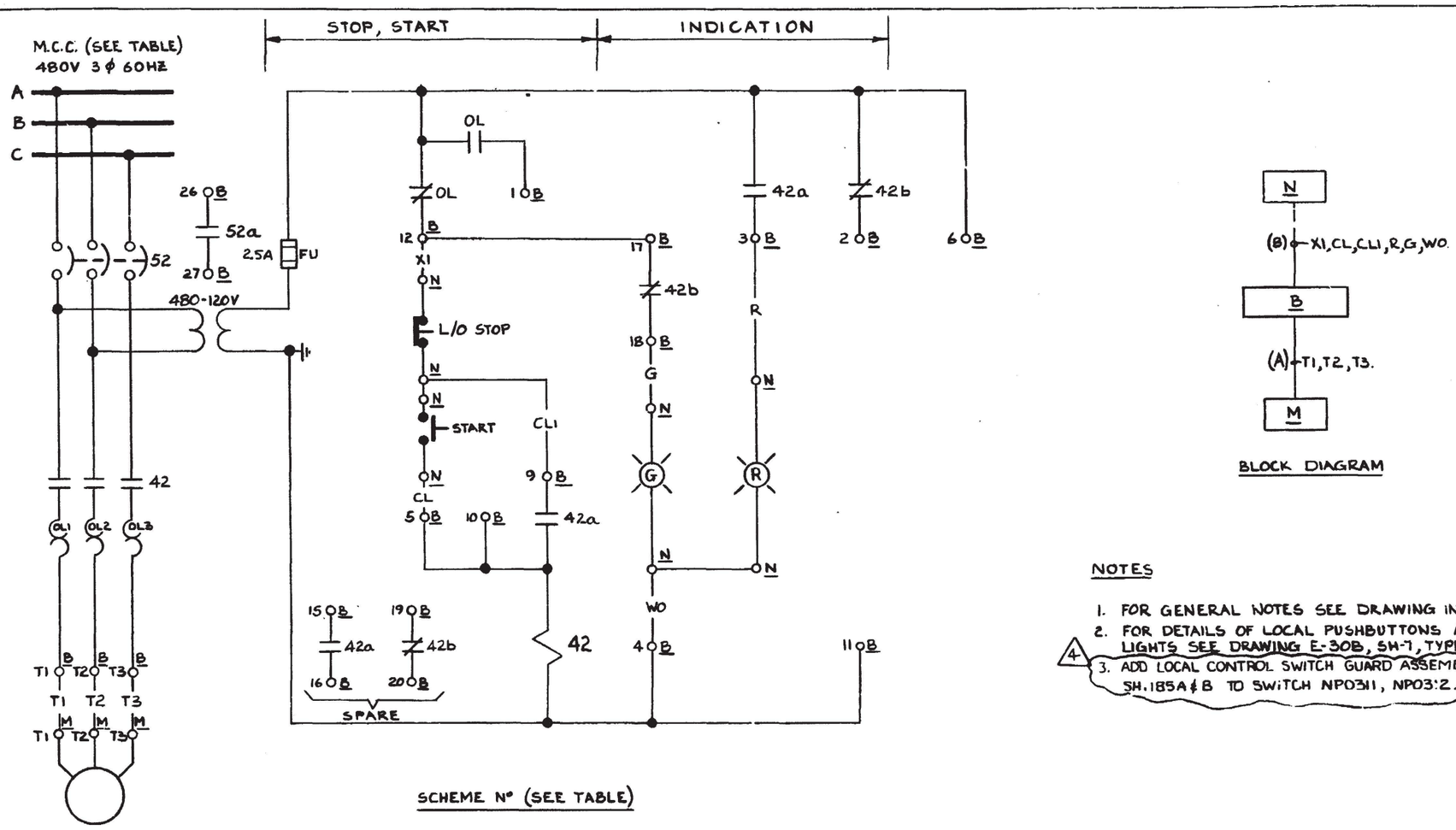

BLOCK DIAGRAM

NOTES

1. FOR GENERAL NOTES SEE DRAWING INDEX E-45B
2. FOR DETAILS OF LOCAL PUSHBUTTONS AND INDICATING LIGHTS SEE DRAWING E-30B, SH-1, TYPES 2 & 4
3. ADD LOCAL CONTROL SWITCH GUARD ASSEMBLY PER E-302A SH.185A & B TO SWITCH NP0311, NP0312. (4)

SCHEME Nº	MCC	START UP Nº	CHANNEL	EQUIPMENT M	EQUIPMENT B	EQUIPMENT N	DESCRIPTION
BE3265	E32B	036	A	MP0311	BE3265	NP0311	MFPT LUBE OIL FILTER PUMP 1-1
BF3265	F32B	056	B	MP0312	BF3265	NP0312	MFPT LUBE OIL FILTER PUMP 1-2

REV.	DESCRIPTION	DATE	DR	CHK	SUPV	CHIEF	PROJ	OWNER	OWNER
4	AS-BUILT FOR FCR 87-075 REV A INC. DCN E-45B-121	11/7/88	RAB						
1	REVISED AS NOTED	6.18.73	MS	MC/KS	CMS				
0	ISSUED FOR CONSTRUCTION	12.29.72	SJH	MC/KS					

DAVIS-BESSE NUCLEAR POWER STATION

THE TOLEDO EDISON COMPANY
THE CLEVELAND ELECTRIC ILLUMINATING COMPANY

ELEMENTARY WIRING DIAGRAMS
MFPT CONTROL & AUXILIARIES
LUBE OIL FILTER PUMPS

BECHTEL COMPANY	JOB NO.	DRAWING NO.	REV.
	7749	E-45B SH-6A	4

G-231-D

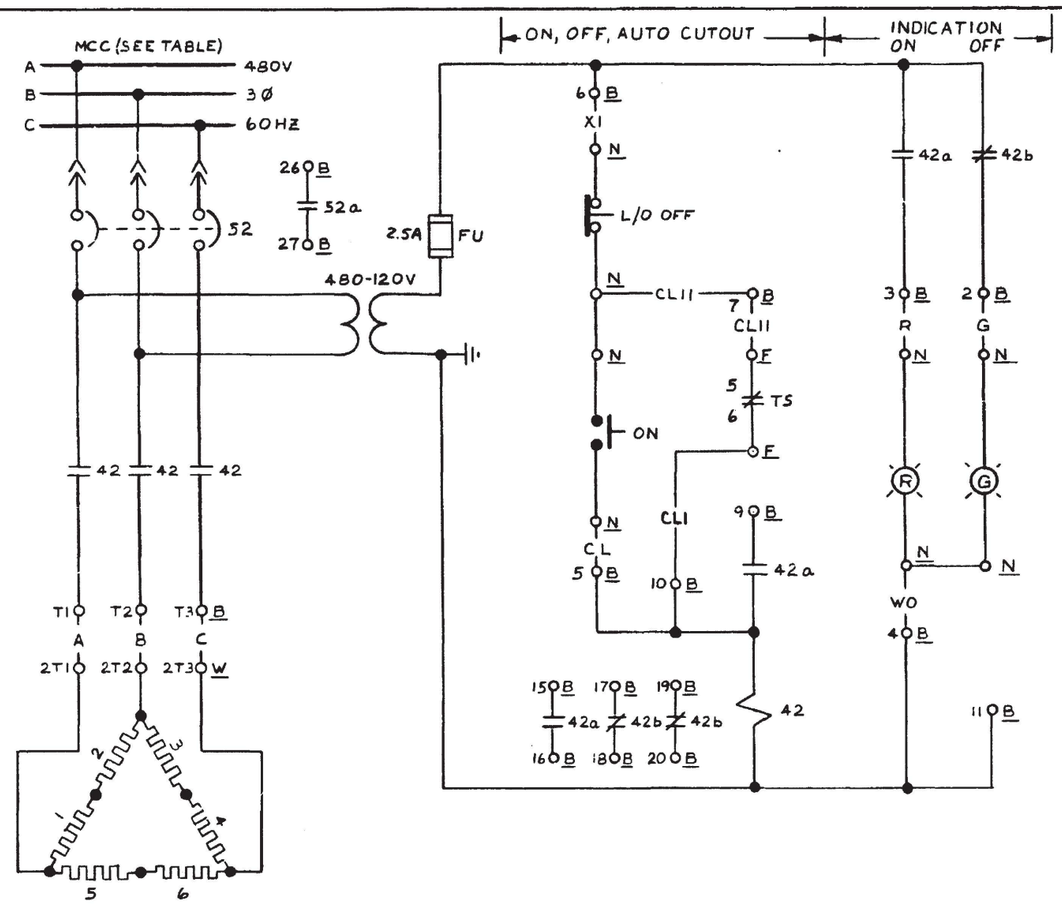

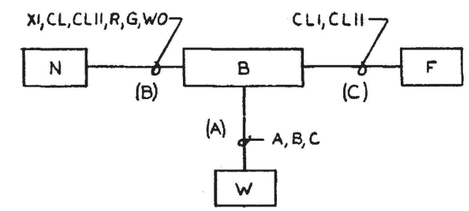

BLOCK DIAGRAM

NOTES

1. FOR GENERAL NOTES SEE DWG. INDEX E-45B
2. FOR DETAILS OF LOCAL PB & INDICATING LIGHTS SEE E-30B SH.7, TYPE 2 & 4.
3. TS-2884 (TS2886) THERMOSTAT CUTOUT SWITCH OPENS ON HIGH TEMPERATURE.
4. REFERENCE DWG. FP-M-98-12 (COMMERCIAL FILTERS DWG. B 9344-0225)
5. ADD LOCAL CONTROL SWITCH GUARD ASSEMBLY PER E-302A SH. 185A & B TO SWITCH NF0371, NF0372 (6)

LEGEND

SCHEME Nº	MCC	START UP Nº	CHANNEL	EQUIPMENT				DESCRIPTION
				B	W	N	F	
BE3273	E32B	36	A	BE3273	WF0371	NF0371	FTS2884	MFPT LUBE OIL FILTER HTR 1-1
BF3137	F31A	36	B	BF3137	WF0372	NF0372	FTS2886	MFPT LUBE OIL FILTER HTR 1-2

REV.	DESCRIPTION	DATE	DR	CHK	SUPV	CHIEF	PROJ.	OWNER	OWNER
6	AS-BUILT FOR FCR 87-075 REV.A INC. DCN E-45B	11/7/	RTB						
5	INC. DCN E-45B-4, FCR 77-217 "AS BUILT"	2-21-78	JLH	RSM	SNC				
0	ISSUED FOR CONSTRUCTION	6-18-73	MS	MK/RS	CMS	CSSmith	RRS		

G-231-0

DAVIS-BESSE NUCLEAR POWER STATION

THE TOLEDO EDISON COMPANY
THE CLEVELAND ELECTRIC ILLUMINATING COMPANY

ELEMENTARY WIRING DIAGRAMS
MFPT CONTROL & AUXILIARIES
LUBE OIL FILTER HEATERS

BECHTEL COMPANY	JOB NO.	DRAWING NO.	REV.
	7749	E-45B SH-6B	6

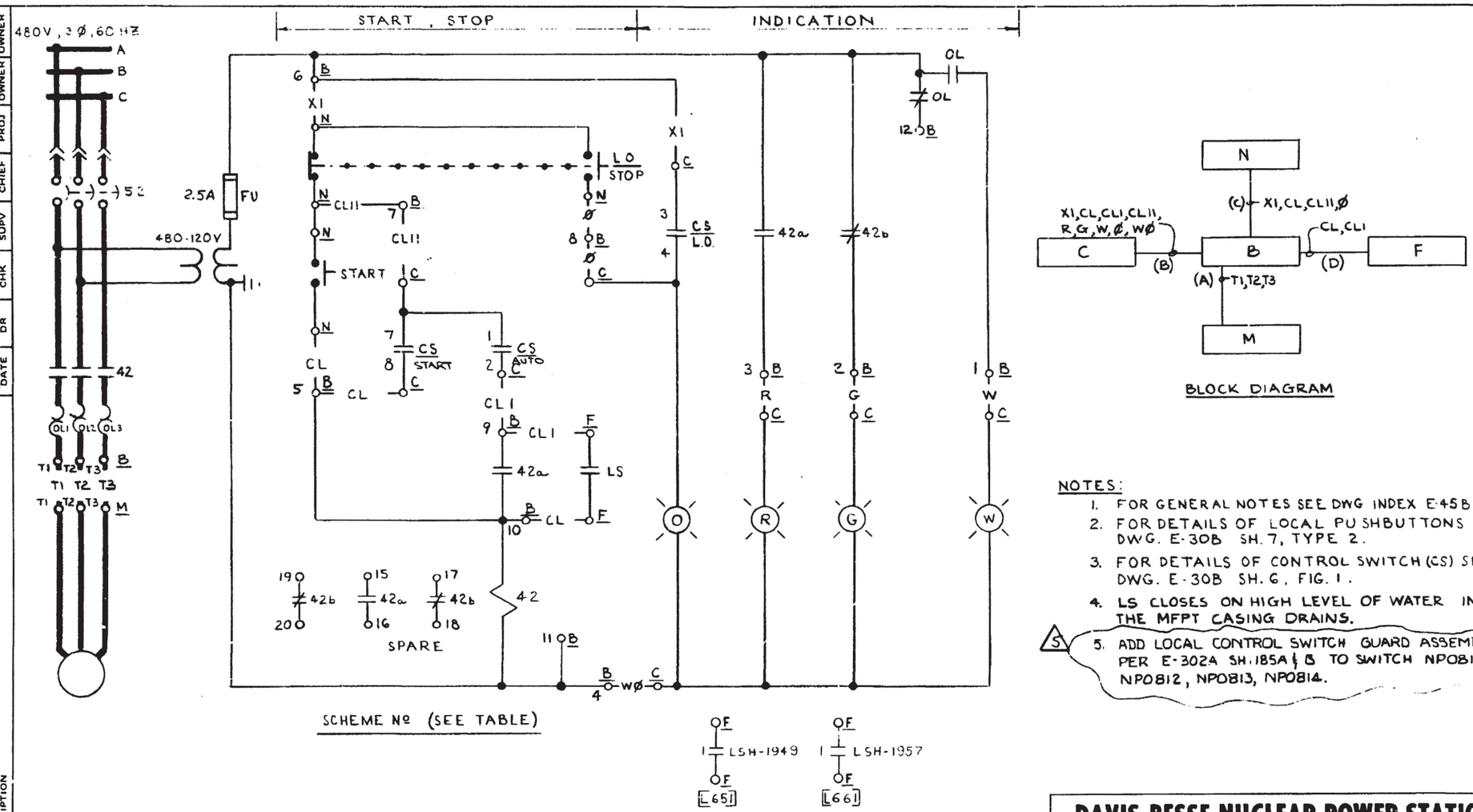

NOTES:

1. FOR GENERAL NOTES SEE DWG INDEX E-45B
2. FOR DETAILS OF LOCAL PUSHBUTTONS SEE DWG. E-30B SH. 7, TYPE 2.
3. FOR DETAILS OF CONTROL SWITCH (CS) SEE DWG. E-30B SH. 6, FIG. 1.
4. LS CLOSES ON HIGH LEVEL OF WATER IN THE MFPT CASING DRAINS.
5. ADD LOCAL CONTROL SWITCH GUARD ASSEMBLY PER E-302A SH. 185A & B TO SWITCH NP0811, NP0812, NP0813, NP0814.

SCHEME Nº	START UP Nº	CHANNEL	WIRE PREFIX	MCC	CS	EQUIPMENT					LEVEL SW. (LS)		DESCRIPTION
						B	C	F	M	N	INSTR. Nº	CONT Nº	
BE3276	92	A	DPA	E32B	H151973	BE3276	C5722	FLS 1949	MP0811	NP0811	LS 1949	1	MFPT 1-1 CASING COND. DRAIN PUMP 1-1-1
BF3276	92	B	DPB	F32B	H151969	BF3276	C5722	FLS 1949	MP0812	NP0812	LS 1949	2	MFPT 1-1 CASING COND. DRAIN PUMP 1-1-2
BE3277	92	A	DPC	E32B	H151961	BE3277	C5722	FLS 1957	MP0813	NP0813	LS 1957	1	MFPT 1-2 CASING COND. DRAIN PUMP 1-2-1
BF3277	92	B	DPD	F32B	H151965	BF3277	C5722	FLS 1957	MP0814	NP0814	LS 1957	2	MFPT 1-2 CASING COND. DRAIN PUMP 1-2-2

DAVIS-BESSE NUCLEAR POWER STATION

THE TOLEDO EDISON COMPANY
THE CLEVELAND ELECTRIC ILLUMINATING COMPANY

ELEMENTARY WIRING DIAGRAMS
MFPT CONTROL & AUXILIARIES
MFPT DRAIN PUMPS

BECHTEL COMPANY	JOB NO.	DRAWING NO.	REV.
	7749	E-45B SH-7	5

REV.	DESCRIPTION	DR	CHK	SUPV	CHIEF	PROJ	OWNER	OWNER
5	AS-BUILT FOR FCR 87-075 REV. A, INC. DCN E-45B-118							
1	REVISED AS NOTED	TJP	MC/KS	CMS				
0	ISSUED FOR CONSTRUCTION							

G-231-0

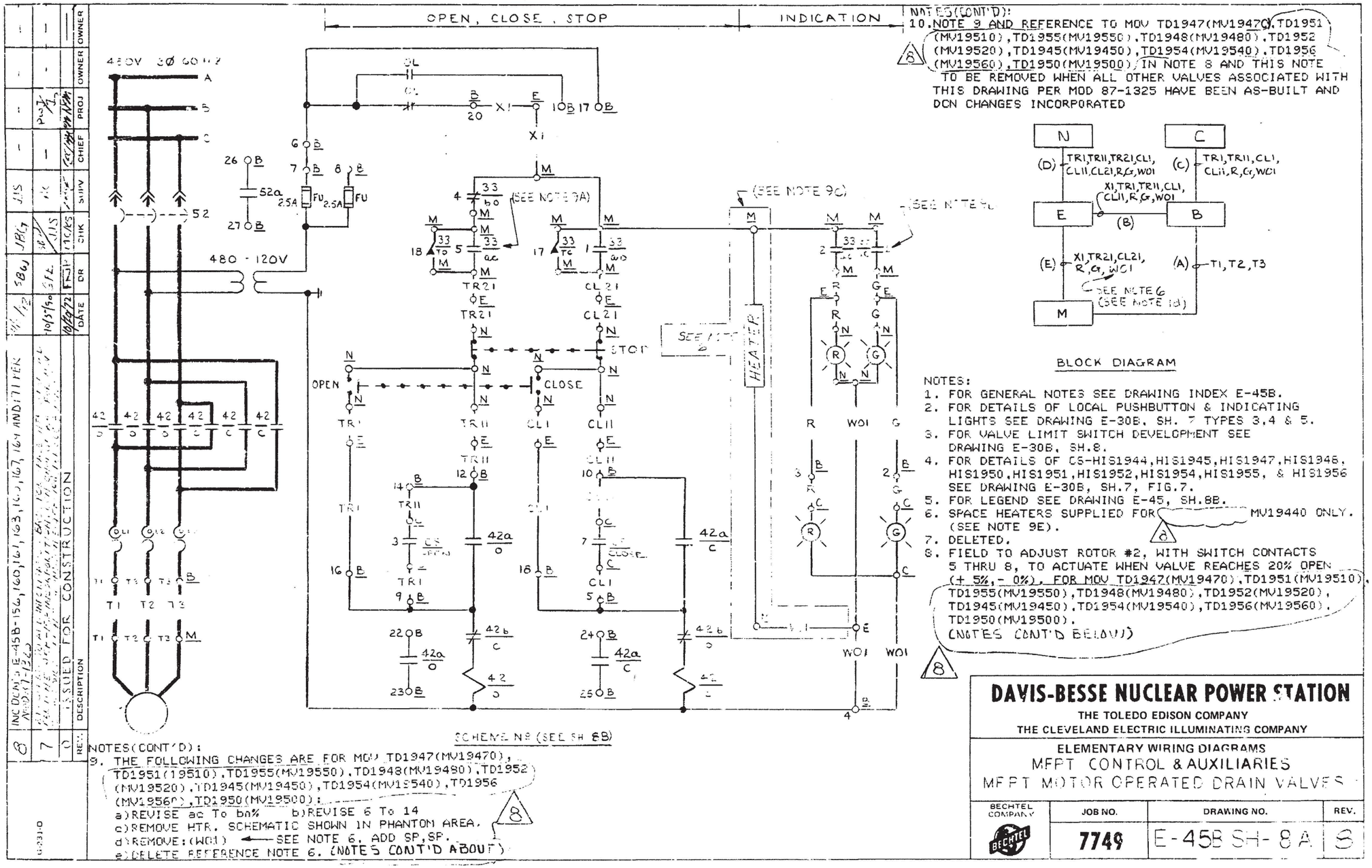

NOTES(CONT'D):
10. NOTE 9 AND REFERENCE TO MOV TD1947(MV19470),TD1951 (MV19510),TD1955(MV19550),TD1948(MV19480),TD1952 (MV19520),TD1945(MV19450),TD1954(MV19540),TD1956 (MV19560),TD1950(MV19500) IN NOTE 8 AND THIS NOTE TO BE REMOVED WHEN ALL OTHER VALVES ASSOCIATED WITH THIS DRAWING PER MOD 87-1325 HAVE BEEN AS-BUILT AND DCN CHANGES INCORPORATED

NOTES:
1. FOR GENERAL NOTES SEE DRAWING INDEX E-45B.
2. FOR DETAILS OF LOCAL PUSHBUTTON & INDICATING LIGHTS SEE DRAWING E-30B, SH. 7 TYPES 3,4 & 5.
3. FOR VALVE LIMIT SWITCH DEVELOPMENT SEE DRAWING E-30B, SH.8.
4. FOR DETAILS OF CS-HIS1944,HIS1945,HIS1947,HIS1948, HIS1950,HIS1951,HIS1952,HIS1954,HIS1955, & HIS1956 SEE DRAWING E-30B, SH.7, FIG.7.
5. FOR LEGEND SEE DRAWING E-45, SH.8B.
6. SPACE HEATERS SUPPLIED FOR MV19440 ONLY. (SEE NOTE 9E).
7. DELETED.
8. FIELD TO ADJUST ROTOR #2, WITH SWITCH CONTACTS 5 THRU 8, TO ACTUATE WHEN VALVE REACHES 20% OPEN (+ 5%,- 0%). FOR MOV TD1947(MV19470),TD1951(MV19510), TD1955(MV19550),TD1948(MV19480),TD1952(MV19520), TD1945(MV19450),TD1954(MV19540),TD1956(MV19560), TD1950(MV19500).
(NOTES CONT'D BELOW)

NOTES(CONT'D):
9. THE FOLLOWING CHANGES ARE FOR MOV TD1947(MV19470), TD1951(19510),TD1955(MV19550),TD1948(MV19480),TD1952 (MV19520),TD1945(MV19450),TD1954(MV19540),TD1956 (MV19560),TD1950(MV19500):
a)REVISE ac To ba% b)REVISE 6 To 14
c)REMOVE HTR. SCHEMATIC SHOWN IN PHANTOM AREA.
d)REMOVE:(WO1) ← SEE NOTE 6. ADD SP,SP.
e)DELETE REFERENCE NOTE 6. (NOTES CONT'D ABOVE)

REV.	DESCRIPTION	DATE	DR	CHK	SUPV	CHIEF	PROJ	OWNER
8	INCORPORATED E-45B-156,160,161,163,165,167,164 AND DCN 87-1325	10/31/90	SFL	JJS	JJS			
7	ISSUED FOR CONSTRUCTION	10/16/72						

DAVIS-BESSE NUCLEAR POWER STATION
THE TOLEDO EDISON COMPANY
THE CLEVELAND ELECTRIC ILLUMINATING COMPANY

ELEMENTARY WIRING DIAGRAMS
MFPT CONTROL & AUXILIARIES
MFPT MOTOR OPERATED DRAIN VALVES

BECHTEL COMPANY	JOB NO.	DRAWING NO.	REV.
BECHTEL	7749	E-45B SH-8A	8

SCHEME Nº	START UP Nº	CHANNEL	WIRE PREFIX	MCC	CS	EQUIPMENT B	EQUIPMENT C	EQUIPMENT E	EQUIPMENT M	EQUIPMENT N	DESCRIPTION
BE3280	092	A	FBAS	E32B	HIS1951	BE3280	C5722	EV19510	MV19510	NV19510	MFPT 1-1 HP STOP VALVE ABOVE SEAT DRAIN.
BF3280	092	B	FDAS	F32B	HIS1947	BF3280	C5722	EV19470	MV19470	NV19470	MFPT 1-2 HP STOP VALVE ABOVE SEAT DRAIN.
BE3283	092	A	FAAS	E32B	HIS1955	BE3283	C5722	EV19550	MV19550	NV19550	MFPT 1-1 LP STOP VALVE ABOVE SEAT DRAIN.
BF3283	092	B	FCAS	F32B	HIS1948	BF3283	C5722	EV19480	MV19480	NV19480	MFPT 1-2 LP STOP VALVE ABOVE SEAT DRAIN.
BE3281	092	A	FBBS	E32B	HIS1952	BE3281	C5722	EV19520	MV19520	NV19520	MFPT 1-1 HP STOP VALVE BELOW SEAT DRAIN.
BF3281	092	B	FDBS	F32B	HIS1945	BF3281	C5722	EV19450	MV19450	NV19450	MFPT 1-2 HP STOP VALVE BELOW SEAT DRAIN.
BE3284	092	A	FABS	E32B	HIS1954	BE3284	C5722	EV19540	MV19540	NV19540	MFPT 1-1 LP STOP VALVE BELOW SEAT DRAIN.
BF3284	092	B	FCBS	F32B	HIS1956	BF3284	C5722	EV19560	MV19560	NV19560	MFPT 1-2 LP STOP VALVE BELOW SEAT DRAIN.
BE3274	092	A	F1D	E32B	HIS1950	BE3274	C5722	EV19500	MV19500	NV19500	MFPT 1-1 1ST STAGE DRAIN.
BF3274	092	B	F2D	F32B	HIS1944	BF3274	C5722	EV19440	MV19440	NV19440	MFPT 1-2 1ST STAGE DRAIN

6

SEE NOTE 6 →

NOTE
REF. TO NOTE 6 & THIS NOTE TO BE REMOVED WHEN ALL OTHER VALVES ABOVE WITH THIS REV. 5 PER MOD 87-1076 HAVE BEEN AS-BUILT AND DCN CHANGES INCORPORATED.

FOR SCHEME, BLOCK DIAGRAM AND NOTES SEE DRAWING E-45 SH-8A.

REV.	DESCRIPTION	DATE	DR	CHK	SUPV	CHIEF	PROJ	OWNER	OWNER
6	INC. DCN'S E-45B-157 169 166 163 170 172 AND CHANGES AND E-45B-162 PER MOD 87-1325	10/15/92	FNP	MC/KS	JJL	—	PROJ	—	—
5	ISSUED FOR CONSTRUCTION	10/29/72							

DAVIS-BESSE NUCLEAR POWER STATION
THE TOLEDO EDISON COMPANY
THE CLEVELAND ELECTRIC ILLUMINATING COMPANY

ELEMENTARY WIRING DIAGRAMS
MFPT CONTROL & AUXILIARIES
MFPT MOTOR OPERATED DRAIN VALVES

BECHTEL COMPANY	JOB NO.	DRAWING NO.	REV.
	7749	E-45B SH-8B	6

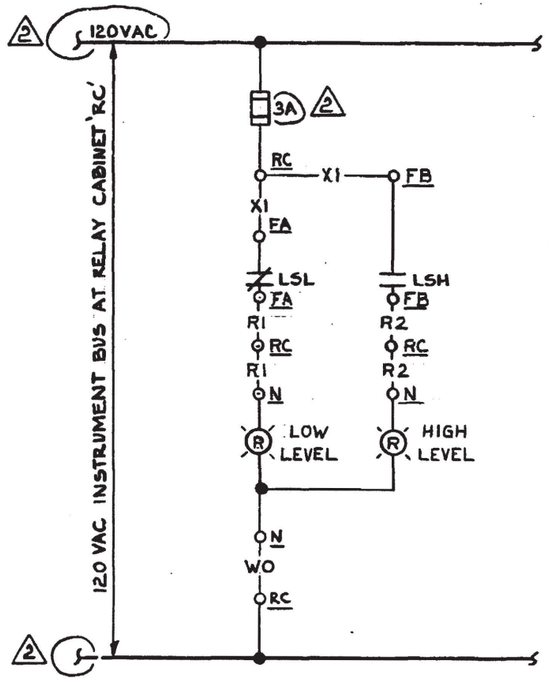

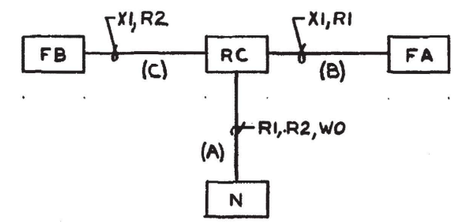

BLOCK DIAGRAM

NOTES

1. FOR GENERAL NOTES SEE DWG INDEX E-45B
2. FOR DETAILS OF INDICATING LIGHTS SEE DRAWING E-30B, SH-7, TYPE 4 EXCEPT WITH TWO RED LENS, & LEGEND AS SHOWN.

SCHEME	SD N°	CHANNEL	EQUIPMENT				DESCRIPTION
			RC	N	FA	FB	
I 1183	36	A	RC2404	NIL1183	FLSL1183	FLSH1183	MFPT USED LUBE OIL TK. 1-1

REV.	DESCRIPTION	DATE	DR	CHK	SUPV	CHIEF	PROJ	OWNER	OWNER
2	ADDED FUSE RATING & REVISED AS NOTED	5-12-76	R.W.S	LEW	SMC				
1	REVISED CHANNEL & RC NO.	3/5/75	RWS	LEW	SMS				
0	ISSUED FOR CONSTRUCTION	6/10/74	BJH	MC/RS					

G-231-D

DAVIS-BESSE NUCLEAR POWER STATION

THE TOLEDO EDISON COMPANY
THE CLEVELAND ELECTRIC ILLUMINATING COMPANY

ELEMENTARY WIRING DIAGRAMS

MFPT CONTROL & AUXILIARIES
MFPT USED LUBE OIL TK I-I

BECHTEL COMPANY	JOB NO.	DRAWING NO.	REV.
	7749	E-45B SH-9	2

NEWFAX 3/85 N58313 ED 7489

DWG. SH. NO.	DESCRIPTION	DESIGNATION: STANDARD WIRING	TYPE	RELAY CONTACTS/SHOWN WITH DEUTSCH SOCKET PIN NO. AND TB. TERM. NO. IN (). 6 (4) 5 (5) 1 (3)		8 (7) 7 (8) 2 (6)		10(10) 9 3 (9)		12(12) 11 4 (11)		
E45B SH.1B	MFPT TRIP AUX. RELAY	PS15X	DEUTSCH RELAY 4AP43AF 125VDC	SPARE	MFP DISCH CHECK VLV CLOSE	PART OF P654	SPARE	ICS INPUT	—	PART OF F043	—	FUNCTION
		RS2DC		—	E44B,SH.2	E45B,SH.14A	—	E729,SH.12	—	E44B,SH.8	—	REF. DWG.
E45B SH.5B	MFPT TURN GEAR L/O RELAY	TG/X	DEUTSCH RELAY 4APX1603 120VAC	L/O INDICATION	L/O TURN GEAR MOTOR	SEAL-IN	INTERLOCK TURN GEAR SOLENOID	SPARE	—	SPARE	—	FUNCTION
		RS5AC		E45B,SH.5A	E45B,SH.5A	E45B,SH.5B	E45B,SH.5B	—	—	—	—	REF. DWG.
E45B SH.5B	MFPT LOW SPEED RELAY	ZSI/X	DEUTSCH RELAY 4APX1603 120VAC	SPARE	S656 QS-2742C	ENERGIZE TURN. GEAR SOLENOID	SPARE	AUTO START TURN. GEAR MOTOR	—	ENERGIZE TURN. GEAR SOLENOID	—	FUNCTION
		RS2AC		—	—	E45B,SH.5B	—	E45B,SH.5A	—	E45B,SH.5B	—	REF. DWG.

NOTES:

1. FOR STANDARD WIRING DETAILS REFER TO DWG.E-737A.

NO.	DATE	REVISIONS
8	10/5/90	INC. DCN E-45B-181 PER MOD 88-0208 SUP.0
7	11-7-88	"AS-BUILT" FOR FCR 85-203A, SUPP.4; GEN. UPDATE INC. DCN E45B-113 (REDRAWN)

INITIALS ON FILE

BY	CH'K	ENGR.	ENGR. SUPV.	GEN. SUPV.
DVK				—

DB 08-06-90

SCALE NONE | DESIGNED ARRAS | DRAWN JOR | DATE 7-29-87

DAVIS-BESSE NUCLEAR POWER STATION
UNIT NO. 1
THE TOLEDO EDISON COMPANY

ELEMENTARY WIRING DIAGRAMS
#1 MFPT & AFPT CONTROL & AUXILIARIES
AUXILIARY RELAYS

DRAWING NO. E-45B SH.10 | REV. 8

DFN=0:/ELEC/E45BSH10.DGN

NEWFAX 3/85 N58313 ED 7489

DWG. SH. NO.	DESCRIPTION	DESIGNATION / STANDARD WIRING	TYPE	RELAY CONTACTS/SHOWN WITH DEUTSCH SOCKET PIN NO. AND TB. TERM. NO. IN ( ).								
				5 (5) / 6 (4) 1 (3)		7 (8) / 8 (7) 2 (6)		9 / 10(10) 3 (9)		11 / 12(12) 4 (11)		
E45B SH.1B	MFPT TRIP AUX. RELAY	PS15X	DEUTSCH RELAY 4AP43AF 125VDC	SPARE	MFP DISCH CHECK VLV CLOSE	PART OF P664	SPARE	ICS INPUT	—	PART OF F050	—	FUNCTION
		RS2DC		—	E44B,SH.2	E45B,SH.15	—	E729,SH.12	—	E44B,SH.8	—	REF. DWG.
E45B SH.5B	MFPT TURN GEAR L/O RELAY	TG/X	DEUTSCH RELAY 4APX1603 120VAC	L/O INDICATION	L/O TURN GEAR MOTOR	SEAL-IN	INTERLOCK TURN GEAR SOLENOID	SPARE	—	SPARE	—	FUNCTION
		RS5AC		E45B,SH.5A	E45B,SH.5A	E45B,SH.5B	E45B,SH.5B	—	—	—	—	REF. DWG.
E45B SH.5B	MFPT LOW SPEED RELAY	ZS1/X	DEUTSCH RELAY 4APX1603 120VAC	SPARE	S666 OS-2752C	ENERGIZE TURN. GEAR SOLENOID	SPARE	AUTO START TURN. GEAR MOTOR	—	ENERGIZE TURN. GEAR SOLENOID	—	FUNCTION
		RS2AC		—	—	E45B,SH.5B	—	E45B,SH.5A	—	E45B,SH.5B	—	REF. DWG.

NOTES:

1. FOR STANDARD WIRING DETAILS REFER TO DWG E737A.

NO.	DATE	REVISIONS	BY	CH'K	ENGR.	ENGR. SUPV.	GEN. SUPV.
0	11/7/89	ISSUED "AS-BUILT" FOR FCR 85-203A, SUPP.4; GEN. UPDATE INC. DCN E45B-113	JOR	MTE	RGP	CWH	CWH w/

DB 10-14-88

SCALE NONE	DESIGNED ARRAS	DRAWN JOR	DATE 7-29-87

DAVIS-BESSE NUCLEAR POWER STATION
UNIT NO. 1
THE TOLEDO EDISON COMPANY

ELEMENTARY WIRING DIAGRAMS
#2 MFPT & AFPT CONTROL & AUXILIARIES
AUXILIARY RELAYS

DRAWING NO.	REV.
E-45B SH.10A	0

DFN=D:/EL/E45BSH10.DGN

NEWFAX 3/85 N58313 ED 7489

DWG. SH. NO.	DESCRIPTION	DESIGNATION / STANDARD WIRING	TYPE	RELAY CONTACTS/SHOWN WITH DEUTSCH SOCKET PIN NO. AND TB. TERM. NO. IN ( ).								
				5 (5) / 6 (4) / 1 (3)		7 (8) / 8 (7) / 2 (6)		9(10) / 10 / 3 (9)		11 / 12(12) / 4 (11)		
E45B SH.1A	MANUAL TURBINE TRIP AUX. RELAY	TRX	DEUTSCH RELAY 4AP43AF 125VDC	SPARE	SOE ANN.	SPARE	TEST CONNECTION	—	Q625	SEAL-IN	—	FUNCTION
		RS10DC		—	E45B,SH.1K	—	—	—	E45B,SH.14	E45B,SH.1A	—	REF. DWG.

DWG. SH. NO.	DESCRIPTION	DESIGNATION / STANDARD WIRING	TYPE	RELAY CONTACTS/SHOWN WITH DEUTSCH SOCKET PIN NO. AND TB. TERM. NO. IN ( ).								
				5 (5) / 6 (4) / 1 (3)		7 (8) / 8 (7) / 2 (6)		9 / 10(10) / 3 (9)		11(12) / 12 / 4 (11)		
E45B SH.1A	MFPT VACUUM TRIP RELAY	VRX	DEUTSCH RELAY 4AP43AF 125VDC	SEAL-IN	TURBINE TRIP PERMISSIVE	INDICATION	SPARE	SPARE	—	—	ALARM PERMISSIVE	FUNCTION
		RS25DC		E45B,SH.1A	E45B,SH.1A	E45B,SH.1A	—	—	—	—	E45B,SH.1A	REF. DWG.

DWG. SH. NO.	DESCRIPTION	DESIGNATION / STANDARD WIRING	TYPE	RELAY CONTACTS/SHOWN WITH DEUTSCH SOCKET PIN NO. AND TB. TERM. NO. IN ( ).								
				5 (5) / 6 (4) / 1 (3)		7 (8) / 8 / 2 (6)		9 / 10 (7) / 3 (9)		11(12) / 12(10) / 4 (11)		
E45B SH.1B	MFPT EMER. GOV. TRIP AUX. RELAY	LS16X	DEUTSCH RELAY 4AP43AF 125VDC	SPARE	PART OF Q613	—	SOE ANN.	TEST CONNECTION	—	LS-16 SOE SEAL-IN	LS-16 AUTO RESET INHIBIT	FUNCTION
		RS26DC		—	E45B,SH.14	—	E45B,SH.1K	—	—	E45B,SH.1L	E45B,SH.1L	REF. DWG.

NOTES:

1. FOR GENERAL NOTES SEE DWG.E45B SH.10.

DB 10-14-88

SCALE NONE	DESIGNED ARRAS	DRAWN JOR	DATE 7-29-87

DAVIS-BESSE NUCLEAR POWER STATION
UNIT NO. 1
THE TOLEDO EDISON COMPANY

ELEMENTARY WIRING DIAGRAMS
#1 MFPT & AFPT CONTROL & AUXILIARIES
AUXILIARY RELAYS

DRAWING NO.	REV.
E-45B SH.10B	0

DFN=D:/EL/E45BSH10.DGN

NO.	DATE	REVISIONS	BY	CH'K	ENGR.	ENGR. SUPV.	GEN. SUPV.
0		ISSUED "AS-BUILT" FOR FCR 85-203A, SUPP.4; INC. DCN E45B-113, AND GEN. UPDATE	JOR	MTF	RGP		

NEWFAX 3/85 N58313 ED 7489

DWG. SH. NO.	DESCRIPTION	DESIGNATION / STANDARD WIRING	TYPE	RELAY CONTACTS/SHOWN WITH DEUTSCH SOCKET PIN NO. AND TB. TERM. NO. IN ().								
				6 (4) / 5 (5) / 1 (3)		8 (7) / 7 (8) / 2 (6)		10 / 9 (10) / 3 (9)		12(12) / 11 / 4 (11)		
E45B SH.1A	MANUAL TURBINE TRIP AUX. RELAY	TRX	DEUTSCH RELAY 4AP43AF 125VDC	SPARE	SOE ANN.	SPARE	TEST CONNECTION	—	Q642	SEAL-IN	—	FUNCTION
		RS10DC		—	E45B,SH.1K	—	—	—	E45B,SH.15	E45B,SH.1A	—	REF. DWG.

DWG. SH. NO.	DESCRIPTION	DESIGNATION / STANDARD WIRING	TYPE	RELAY CONTACTS/SHOWN WITH DEUTSCH SOCKET PIN NO. AND TB. TERM. NO. IN ().								
				6 (4) / 5 (5) / 1 (3)		8 (7) / 7 (8) / 2 (6)		10(10) / 9 / 3 (9)		12 / 11(12) / 4 (11)		
E45B SH.1A	MFPT VACUUM TRIP RELAY	VRX	DEUTSCH RELAY 4AP43AF 125VDC	SEAL-IN	TURBINE TRIP PERMISSIVE	INDICATION	SPARE	SPARE	—	—	ALARM PERMISSIVE	FUNCTION
		RS25DC		E45B,SH.1A	E45B,SH.1A	E45B,SH.1A	—	—	—	—	E45B,SH.1A	REF. DWG.

DWG. SH. NO.	DESCRIPTION	DESIGNATION / STANDARD WIRING	TYPE	RELAY CONTACTS/SHOWN WITH DEUTSCH SOCKET PIN NO. AND TB. TERM. NO. IN ().								
				6 (4) / 5 (5) / 1 (3)		8 / 7 (8) / 2 (6)		10 (7) / 9 / 3 (9)		12(10) / 11(12) / 4 (11)		
E45B SH.1B	MFPT EMER. GOV. TRIP AUX. RELAY	LS16X	DEUTSCH RELAY 4AP43AF 125VDC	SPARE	PART OF [Q634]	—	SOE ANN.	TEST CONNECTION	—	LS-16 SOE SEAL-IN	LS-16 AUTO RESET INHIBIT	FUNCTION
		RS26DC		—	E45B,SH.15	—	E45B,SH.1K	—	—	E45B,SH.1L	E45B,SH.1L	REF. DWG.

NOTES:

1. FOR GENERAL NOTES SEE DWG.E45B SH.10A.

NO.	DATE	REVISIONS	BY	CH'K	ENGR.	ENGR. SUPV.	GEN. SUPV.
0	11/1/88	ISSUED "AS-BUILT" FOR FCR 85-203A, SUPP.4; INC. DCN E45B-113, AND GEN. UPDATE	JOR	MTF	RGP		

SCALE NONE | DESIGNED ARRAS | DRAWN JOR | DATE 7-29-87

DAVIS-BESSE NUCLEAR POWER STATION
UNIT NO. 1
THE TOLEDO EDISON COMPANY

ELEMENTARY WIRING DIAGRAMS
#2 MFPT & AFPT CONTROL & AUXILIARIES
AUXILIARY RELAYS

DRAWING NO. E-45B SH.10C | REV. 0

DB 10-14-88

DFN=D:/EL/E45BSH10.DGN

NEWFAX 3/85 N58313 ED T489

DWG. SH. NO.	DESCRIPTION	DESIGNATION / STANDARD WIRING	TYPE	RELAY CONTACTS/SHOWN WITH ARMEL SOCKET PIN NO. AND TB. TERM. NO. IN ( ). 3 (12) 1 2		6 (10) 4 (9) 5 (11)		9 (7) 7 (6) 8 (8)		12 10 (4) 11 (5)		
E45B SH.1A	LOW VACUUM TRIP AUX. RELAY	PS3337X	DEUTSCH RELAY 4AP43AF 125VDC	SEAL-IN	—	SPARE	TEST CONNECTION	SPARE	SPARE	—	SOE ANN.	FUNCTION
		RS30DC		E45B,SH.1A	—	—	—	—	—	—	E45B,SH.1K	REF. DWG.
E45B SH.1L	PUMP HIGH DISCH. PRESS. AUX. RELAY	PSHX	DEUTSCH RELAY 4AP43AF 125VDC	SEAL-IN	—	SPARE	TEST CONNECTION	SPARE	PART OF Q628	—	SOE ANN.	FUNCTION
		RS30DC		E45B,SH.1L	—	—	—	—	E45B,SH.14	—	E45B,SH.1K	REF. DWG.
E45B SH.1L	TURB. BRG LOW OIL PRESS. TRIP AUX. RELAY	PS19X	DEUTSCH RELAY 4AP43AF 125VDC	SEAL-IN	—	SPARE	TEST CONNECTION	SPARE	PART OF P657	—	SOE ANN.	FUNCTION
		RS30DC		E45B,SH.1L	—	—	—	—	E45B,SH.14	—	E45B,SH.1K	REF. DWG.
E45B SH.1L	PUMP BRG LOW OIL PRESS. TRIP AUX. RELAY	PS25X	DEUTSCH RELAY 4AP43AF 125VDC	SEAL-IN	—	SPARE	TEST CONNECTION	SPARE	PART OF P639	—	SOE ANN.	FUNCTION
		RS30DC		E45B,SH.1L	—	—	—	—	E45B,SH.14	—	E45B,SH.1K	REF. DWG.
E45B SH.1L	THRUST BRG TRIP (ACTIVE) AUX. RELAY	PS2X	DEUTSCH RELAY 4AP43AF 125VDC	SEAL-IN	—	SPARE	TEST CONNECTION	SPARE	PART OF P658	—	SOE ANN.	FUNCTION
		RS30DC		E45B,SH.1L	—	—	—	—	E45B,SH.14	—	E45B,SH.1K	REF. DWG.
E45B SH.1L	THRUST BRG TRIP (INACTIVE) AUX. RELAY	PS12X	DEUTSCH RELAY 4AP43AF 125VDC	SEAL-IN	—	SPARE	TEST CONNECTION	SPARE	PART OF P658	—	SOE ANN.	FUNCTION
		RS30DC		E45B,SH.1L	—	—	—	—	E45B,SH.14	—	E45B,SH.1K	REF. DWG.

NOTES:

1. FOR GENERAL NOTES SEE DWG.E45B SH.10.

NO.	DATE	REVISIONS	BY	CH'K	ENGR.	ENGR. SUPV.	GEN. SUPV.
0	11/7/89	ISSUED "AS-BUILT" FOR FCR 85-203A, SUPP.4; INC. DCN E45B-113, AND GEN. UPDATE	JOR	MTF	RGP		

SCALE NONE | DESIGNED ARRAS | DRAWN JOR | DATE 7-29-87

DAVIS-BESSE NUCLEAR POWER STATION
UNIT NO. 1
THE TOLEDO EDISON COMPANY

ELEMENTARY WIRING DIAGRAMS
#1 MFPT & AFPT CONTROL & AUXILIARIES
AUXILIARY RELAYS

DRAWING NO. E-45B SH.10D | REV. 0

DB 10-14-88

DFN=D:/EL/E45BSH10.DGN

NEWFAX 3/85 N58313 ED 7489

NO.	DATE	REVISIONS	BY	CH'K	ENGR.	ENGR. SUPV.	GEN. SUPV.
0	11/9/88	ISSUED "AS-BUILT" FOR FCR 85-203A, SUPP.4; INC. DCN E45B-113, AND GEN. UPDATE	JOR	MTF	RGP		

DWG. SH. NO.	DESCRIPTION	DESIGNATION / STANDARD WIRING	TYPE	RELAY CONTACTS/SHOWN WITH ARMEL SOCKET PIN NO. AND TB. TERM. NO. IN ( ).								
				3 (12) 1 2		6 (10) 4 (9) 5 (11)		9 (7) 7 (6) 8 (8)		12 10 (4) 11 (5)		
E45B SH.1A	LOW VACUUM TRIP AUX. RELAY	PS3337X	DEUTSCH RELAY 4AP43AF 125VDC	SEAL-IN	—	SPARE	TEST CONNECTION	SPARE	SPARE	—	SOE ANN.	FUNCTION
		RS30DC		E45B,SH.1A	—	—	—	—	—	—	E45B,SH.1K	REF. DWG.
E45B SH.1L	PUMP HIGH DISCH. PRESS. AUX. RELAY	PSHX	DEUTSCH RELAY 4AP43AF 125VDC	SEAL-IN	—	SPARE	TEST CONNECTION	SPARE	PART OF 0648	—	SOE ANN.	FUNCTION
		RS30DC		E45B,SH.1L	—	—	—	—	E45B,SH.15	—	E45B,SH.1K	REF. DWG.
E45B SH.1L	TURB. BRG LOW OIL PRESS. TRIP AUX. RELAY	PS19X	DEUTSCH RELAY 4AP43AF 125VDC	SEAL-IN	—	SPARE	TEST CONNECTION	SPARE	PART OF P667	—	SOE ANN.	FUNCTION
		RS30DC		E45B,SH.1L	—	—	—	—	E45B,SH.15	—	E45B,SH.1K	REF. DWG.
E45B SH.1L	PUMP BRG LOW OIL PRESS. TRIP AUX. RELAY	PS25X	DEUTSCH RELAY 4AP43AF 125VDC	SEAL-IN	—	SPARE	TEST CONNECTION	SPARE	PART OF P646	—	SOE ANN.	FUNCTION
		RS30DC		E45B,SH.1L	—	—	—	—	E45B,SH.15	—	E45B,SH.1K	REF. DWG.
E45B SH.1L	THRUST BRG TRIP (ACTIVE) AUX. RELAY	PS2X	DEUTSCH RELAY 4AP43AF 125VDC	SEAL-IN	—	SPARE	TEST CONNECTION	SPARE	PART OF P668	—	SOE ANN.	FUNCTION
		RS30DC		E45B,SH.1L	—	—	—	—	E45B,SH.15	—	E45B,SH.1K	REF. DWG.
E45B SH.1L	THRUST BRG TRIP (INACTIVE) AUX. RELAY	PS12X	DEUTSCH RELAY 4AP43AF 125VDC	SEAL-IN	—	SPARE	TEST CONNECTION	SPARE	PART OF P668	—	SOE ANN.	FUNCTION
		RS30DC		E45B,SH.1L	—	—	—	—	E45B,SH.15	—	E45B,SH.1K	REF. DWG.

NOTES:

1. FOR GENERAL NOTES SEE DWG.E45B SH.10A.

DB 10-14-88

SCALE NONE | DESIGNED ARRAS | DRAWN JOR | DATE 7-29-87

DAVIS-BESSE NUCLEAR POWER STATION
UNIT NO. 1
THE TOLEDO EDISON COMPANY

ELEMENTARY WIRING DIAGRAMS
#2 MFPT & AFPT CONTROL & AUXILIARIES
AUXILIARY RELAYS

DRAWING NO.	REV.
E-45B SH.10E	0

DFN=D:/EL/E45BSH10.DGN

NEWFAX 3/85 N58313 ED 7489

DWG. SH. NO.	DESCRIPTION	DESIGNATION / STANDARD WIRING	TYPE	RELAY CONTACTS/SHOWN WITH ARMEL SOCKET PIN NO. AND TB. TERM. NO. IN ( ).								
				3 (12) 1 (11) 2		6 4 (9) 5 (10)		9 (7) 7 (6) 8 (8)		12 (4) 10 (3) 11 (5)		
E45B SH.1L	BONAFIDE TURBINE TRIP AUX. RELAY	A1	DEUTSCH RELAY 4AP43AF 125VDC	SPARE	—	—	PART OF P657	SPARE	PART OF P639	SPARE	PART OF P658	FUNCTION
		RS31DC		—	—	—	E45B,SH.14	—	E45B,SH.14	—	E45B,SH.14	REF. DWG.
E45B SH.1L	BONAFIDE TURBINE TRIP AUX. RELAY	A2	DEUTSCH RELAY 4AP43AF 125VDC	SEAL-IN FOR RELAYS A1 & A2	—	—	PART OF Q628	SPARE	AUTO RESET CIRCUIT	SPARE	TRX RESET INHIBIT	FUNCTION
		RS31DC		E45B,SH.1L	—	—	E45B,SH.14	—	E45B,SH.1L	—	E45B,SH.1A	REF. DWG.
E45B SH.1L	SOE ANNUNCIATOR AUTO RESET AUX. RELAY	RTX	DEUTSCH RELAY 4AP43AF 125VDC	AUTO RESET SOE ANN.	—	—	SPARE	SPARE	AUX.RELAYS RESET	AUTO SEQ. RESET SOE ANN.	SPARE	FUNCTION
		RS31DC		E45B,SH.1L	—	—	—	—	E45B,SH.1L	E45B,SH.1L	—	REF. DWG.

NOTES:

1. FOR GENERAL NOTES SEE DWG.E45B SH.10.

NO.	DATE	REVISIONS	BY	CH'K	ENGR.	ENGR. SUPV.	GEN. SUPV.
0	11/7/88	ISSUED "AS-BUILT" FOR FCR 85-203A, SUPP.4; INC. DCN E45B-113, AND GEN. UPDATE	JOR	MTF			

DB 10-14-88

SCALE NONE | DESIGNED ARRAS | DRAWN JOR | DATE 7-30-87

DAVIS-BESSE NUCLEAR POWER STATION
UNIT NO. 1
THE TOLEDO EDISON COMPANY

ELEMENTARY WIRING DIAGRAMS
#1 MFPT & AFPT CONTROL & AUXILIARIES
AUXILIARY RELAYS

DRAWING NO. E-45B SH.10F | REV. 0

DFN=D:/EL/E45BSH10.DGN

NEWFAX 3/85 N58313 ED 7489

DWG. SH. NO.	DESCRIPTION	DESIGNATION / STANDARD WIRING	TYPE	RELAY CONTACTS/SHOWN WITH ARMEL SOCKET PIN NO. AND TB. TERM. NO. IN ( ).								
				3 (12) 1 (11) 2		6 4 (9) 5 (10)		9 (7) 7 (6) 8 (8)		12 (4) 10 (3) 11 (5)		
E45B SH.1L	BONAFIDE TURBINE TRIP AUX. RELAY	A1	DEUTSCH RELAY 4AP43AF 125VDC	SPARE	—	—	PART OF P667	SPARE	PART OF P646	SPARE	PART OF P668	FUNCTION
		RS31DC		—	—	—	E45B,SH.15	—	E45B,SH.15	—	E45B,SH.15	REF. DWG.
E45B SH.1L	BONAFIDE TURBINE TRIP AUX. RELAY	A2	DEUTSCH RELAY 4AP43AF 125VDC	SEAL-IN FOR RELAYS A1 & A2	—	—	PART OF Q648	SPARE	AUTO RESET CIRCUIT	SPARE	TRX RESET INHIBIT	FUNCTION
		RS31DC		E45B,SH.1L	—	—	E45B,SH.15	—	E45B,SH.1L	—	E45B,SH.1A	REF. DWG.
E45B SH.1L	SOE ANNUNCIATOR AUTO RESET AUX. RELAY	RTX	DEUTSCH RELAY 4AP43AF 125VDC	AUTO RESET SOE ANN.	—	—	SPARE	SPARE	AUX.RELAYS RESET	AUTO SEQ. RESET SOE ANN.	SPARE	FUNCTION
		RS31DC		E45B,SH.1L	—	—	—	—	E45B,SH.1L	E45B,SH.1L	—	REF. DWG.

NOTES:

1. FOR GENERAL NOTES SEE DWG.E45B SH.10A.

NO.	DATE	REVISIONS	BY	CH'K	ENGR.	ENGR. SUPV.	GEN. SUPV.
0	11/7/88	ISSUED "AS-BUILT" FOR FCR 85-203A, SUPP.4; INC. DCN E45B-113, AND GEN. UPDATE	JOR	MTE	RGP	Plow	UMaurice

DB 10-14-88

SCALE NONE	DESIGNED ARRAS	DRAWN JOR	DATE 7-30-87

DAVIS-BESSE NUCLEAR POWER STATION
UNIT NO. 1
THE TOLEDO EDISON COMPANY

ELEMENTARY WIRING DIAGRAMS
#2 MFPT & AFPT CONTROL & AUXILIARIES
AUXILIARY RELAYS

DRAWING NO.	REV.
E-45B SH.10G	0

DFN=D:/EL/E45BSH10.DGN

NEWFAX 3/85 N50313 ED 7409

DWG. SH. NO.	DESCRIPTION	DESIGNATION / STANDARD WIRING	TYPE	RELAY CONTACTS/ SHOWN WITH DEVICE TERM. NO. AND TB. TERM. NO. IN ().								
				1 (4) 3 (5) 5 (3)		2 (7) 4 (8) 6 (6)						
E45B SH.1A	MFPT TRIP RELAY (0.13 SEC. ON-DELAY)	T1	AGASTAT 7012PAB 125VDC	TURBINE TRIP	SPARE	TRIP STATUS	SPARE					FUNCTION
		RS4DC		E45B,SH.1A	——	E45B,SH.1L	——					REF. DWG.
E45B SH.1A	MFPT HIGH PRESS TRIP RELAY (0.1 SEC ON-DELAY)	PSH506X/TDPU	AGASTAT 7012PA 125VDC	TURBINE TRIP	SPARE	SPARE	SPARE					FUNCTION
		RS4DC		E45B,SH.1L	——	——	——					REF. DWG.
E45B SH.5B	MFPT TURN.GEAR FAILURE RELAY (5 SEC ON-DELAY)	62TG	AGASTAT 2412AD 120VAC	ENERGIZE TG/X RELAY	SPARE	SPARE	SPARE					FUNCTION
		RS4AC		E45B,SH.5B	——	——	——					REF. DWG.

DWG. SH. NO.	DESCRIPTION	DESIGNATION / STANDARD WIRING	TYPE	RELAY CONTACTS/ SHOWN WITH DEVICE TERM. NO. AND TB. TERM. NO. IN ().								
				T...TIMED 1 (4)T T 3 (5) 2 (3)		T...TIMED 6 (7)T T 8 (8) 7 (6)		I...INST. 4(10) 9(9) I	I...INST. 5(12) 10(11) I			
E45B SH.1A	MFPT TRIP RELAY (0.13 SEC. ON-DELAY)	T2	AGASTAT DSC-XX-01-2-5-P-A-X-A-A 125VDC	TURBINE TRIP	SPARE	TRIP STATUS	SPARE	TEST CONNECTION	AUTO RESET CIRCUIT			FUNCTION
		RS60DC		E45B,SH.1A	——	E45B,SH.1L	——	——	E45B,SH.1J			REF. DWG.

NOTES:

1. FOR GENERAL NOTES SEE DWG.E45B SH.10.

DB 10-14-88

SCALE NONE	DESIGNED ARRAS	DRAWN JOR	DATE 7-30-87

DAVIS-BESSE NUCLEAR POWER STATION
UNIT NO. 1
THE TOLEDO EDISON COMPANY

ELEMENTARY WIRING DIAGRAMS
#1 MFPT & AFPT CONTROL & AUXILIARIES
AUXILIARY RELAYS

DRAWING NO.	REV.
E-45B SH.10H	0

DFN-D:/EL/E45BSH10.DGN

NO.	DATE	REVISIONS	BY	CH'K	ENGR.	ENGR. SUPV.	GEN. SUPV.
0	11/7/88	ISSUED "AS-BUILT" FOR FCR 85-203A, SUPP.4; INC. DCN E45B-113, AND GEN. UPDATE	JOR	MTF	MTF	CVW	VMW

NEWFAX 3/85 N50313 ED 7489

DWG. SH. NO.	DESCRIPTION	DESIGNATION / STANDARD WIRING	TYPE	RELAY CONTACTS/ SHOWN WITH DEVICE TERM. NO. AND TB. TERM. NO. IN ().								
				1 (4) 5 (3) 3 (5)		2 (7) 6 (6) 4 (8)						
E45B SH.1A	MFPT TRIP RELAY (0.13 SEC. ON-DELAY)	T1 / RS4DC	AGASTAT 7012PAB 125VDC	TURBINE TRIP	SPARE	TRIP STATUS	SPARE					FUNCTION
				E45B,SH.1A	—	E45B,SH.1L	—					REF. DWG.
E45B SH.1A	MFPT HIGH PRESS TRIP RELAY (0.1 SEC ON-DELAY)	PSH582X/TDPU / RS4DC	AGASTAT 7012PA 125VDC	TURBINE TRIP	SPARE	SPARE	SPARE					FUNCTION
				E45B,SH.1L	—	—	—					REF. DWG.
E45B SH.5B	MFPT TURN.GEAR FAILURE RELAY (5 SEC ON-DELAY)	62TG / RS4AC	AGASTAT 2412AD 120VAC	ENERGIZE TG/X RELAY	SPARE	SPARE	SPARE					FUNCTION
				E45B,SH.5B	—	—	—					REF. DWG.

DWG. SH. NO.	DESCRIPTION	DESIGNATION / STANDARD WIRING	TYPE	RELAY CONTACTS/ SHOWN WITH DEVICE TERM. NO. AND TB. TERM. NO. IN ().								
				T...TIMED 1 (4) T 2 (3) T 3 (5)		T...TIMED 6 (7)T 7 (6) T 8 (8)		I ..INST. 4(10) 9(9) I	I...INST. 5(12)10(11) I			
E45B SH.1A	MFPT TRIP RELAY (0.13 SEC. ON-DELAY)	T2 / RS60DC	AGASTAT DSC-XX-01-2-5-P-A-X-A-A 125VDC	TURBINE TRIP	SPARE	TRIP STATUS	SPARE	TEST CONNECTION	AUTO RESET CIRCUIT			FUNCTION
				E45B,SH.1A	—	E45B,SH.1L	—	—	E45B,SH.1J			REF. DWG.

NOTES:

1. FOR GENERAL NOTES SEE DWG.E45B SH.10A.

DB 10-14-88

SCALE NONE	DESIGNED ARRAS	DRAWN JOR	DATE 7-30-87

DAVIS-BESSE NUCLEAR POWER STATION
UNIT NO. 1
THE TOLEDO EDISON COMPANY

ELEMENTARY WIRING DIAGRAMS
#2 MFPT & AFPT CONTROL & AUXILIARIES
AUXILIARY RELAYS

DRAWING NO. E-45B SH.10J REV. 0

DFN=D1/EL/E45BSH10.DGN

NO.	DATE	REVISIONS	BY	CH'K	ENGR.	ENGR. SUPV.	GEN. SUPV.
0	11/7/89	ISSUED "AS-BUILT" FOR FCR 85-203A, SUPP.4; INC. DCN E45B-113, AND GEN. UPDATE	JOR	MTF	MTH	CVW/PJ	JRW/CL

NEWFAX 3/85 N58313 ED 7489

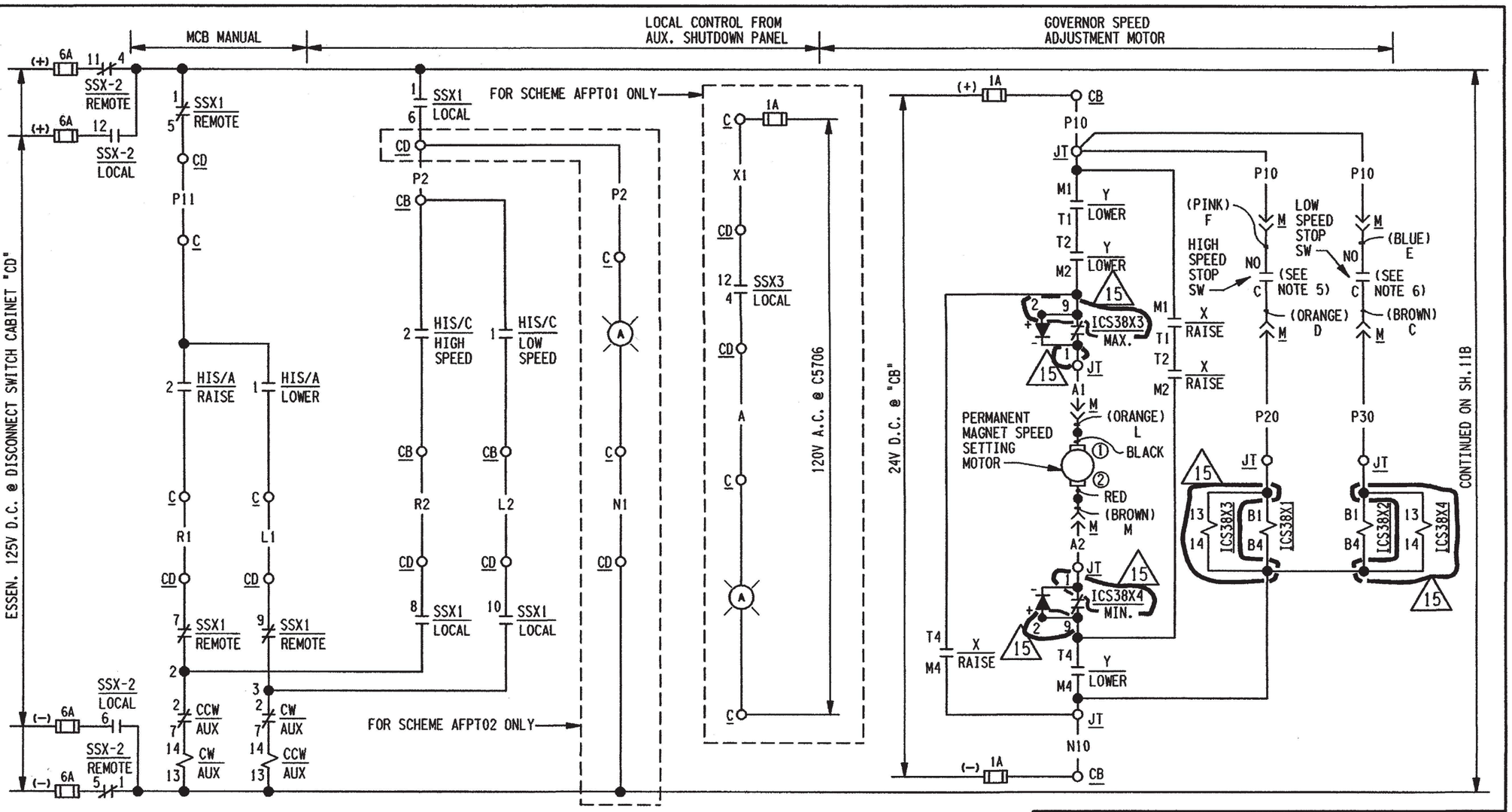

CONTACTS	CW/AUX.	CCW/AUX.	SSX1	SSX2	SSX3
1 ● 6 / 5	X/RAISE SH.11B	Y/LOWER SH.11B	TRANSFER CONTROL THIS SHEET	TRANSFER FUSE THIS SHEET	TRANSFER LIGHTS SH.11B
2 ● 8 / 7	INTLK CCW/AUX. THIS SHEET	INTLK CW/AUX. THIS SHEET	TRANSFER CONTROL THIS SHEET	TRANSFER LIGHTS SH.11B	SPARE
3 ● 10 / 9	SPARE ▲	SPARE ●	TRANSFER * CONTROL THIS SHEET	TRANSFER * LIGHTS SH.11B	SPARE
4 ● 12 / 11	SPARE ▲	SPARE ●	* SPARE	TRANSFER * FUSE THIS SHEET	TRANSFER LIGHT THIS SHEET

FOR SSX1, SSX2, & SSX3 COILS SEE SH.11C (NOTE: SSX3 IS FOR SCHEME AFPT01 ONLY)

SCHEME NO. (SEE TABLE)

FOR BLOCK DIAGRAM, LEGEND & NOTES, SEE SH.11B

* BOTH CONTACTS 3-9-10 & 4-11-12 WIRED OUT

▲ N.O. CONTACTS 3-10 & 4-12 ONLY WIRED OUT

● N.C. CONTACT 3-9 & N.O. CONTACT 4-12 ONLY WIRED OUT

SCALE NONE	DESIGNED	DRAWN PAG	DATE 04-20-89

DAVIS-BESSE NUCLEAR POWER STATION
UNIT NO. 1
THE TOLEDO EDISON COMPANY

ELEMENTARY WIRING DIAGRAM
AFPT & MFPT CONTROL &
AUXILIARIES AFPT CONTROL

DRAWING NO.	REV.
E-45B SH-11A	15

DB 11-21-08 DFN= F:/SCHEME/E45BSH11A.DGN

NO.	DATE	REVISIONS	BY	CH'K	ENGR.	ENGR. SUPV.	GEN. SUPV.
14	10-15-94	INC DCN E-45B-192 PER MOD 94-0014 SUPP.0	RS	LEW	RS	SNS	CNP
15	12/22/88	INC. DCN'S E-45B-201 & 202 PER ECP 01-0471-00	SBW				
1	3/5/75	REDRAWN TO ADD AFPT AUTO ESSEN. CONTROLS					

"INITIALS ON FILE"

SCHEME NO.	START UP NO.	CHANNEL	D.C. PNL	WIRE PREFIX	CONTROL SWITCHES & INDICATING LT. HIS/A		HIS/C	IL		EQUIPMENT C	JT	CB	CD	M					DESCRIPTION
AFPT01	50	1	D1P20	AFA	HIS520A		HIS1CS38B	ILICS38B		C5706	JT2703	C3630	CDE12A-1	MK0031					AFPT 1 GOV. CONT.
AFPT02	50	2	D2P20	AFB	HIS521A		HIS1CS38A	ILICS38A		C5709	JT2704	C3630	CDF12A-1	MK0032					AFPT 2 GOV. CONT.

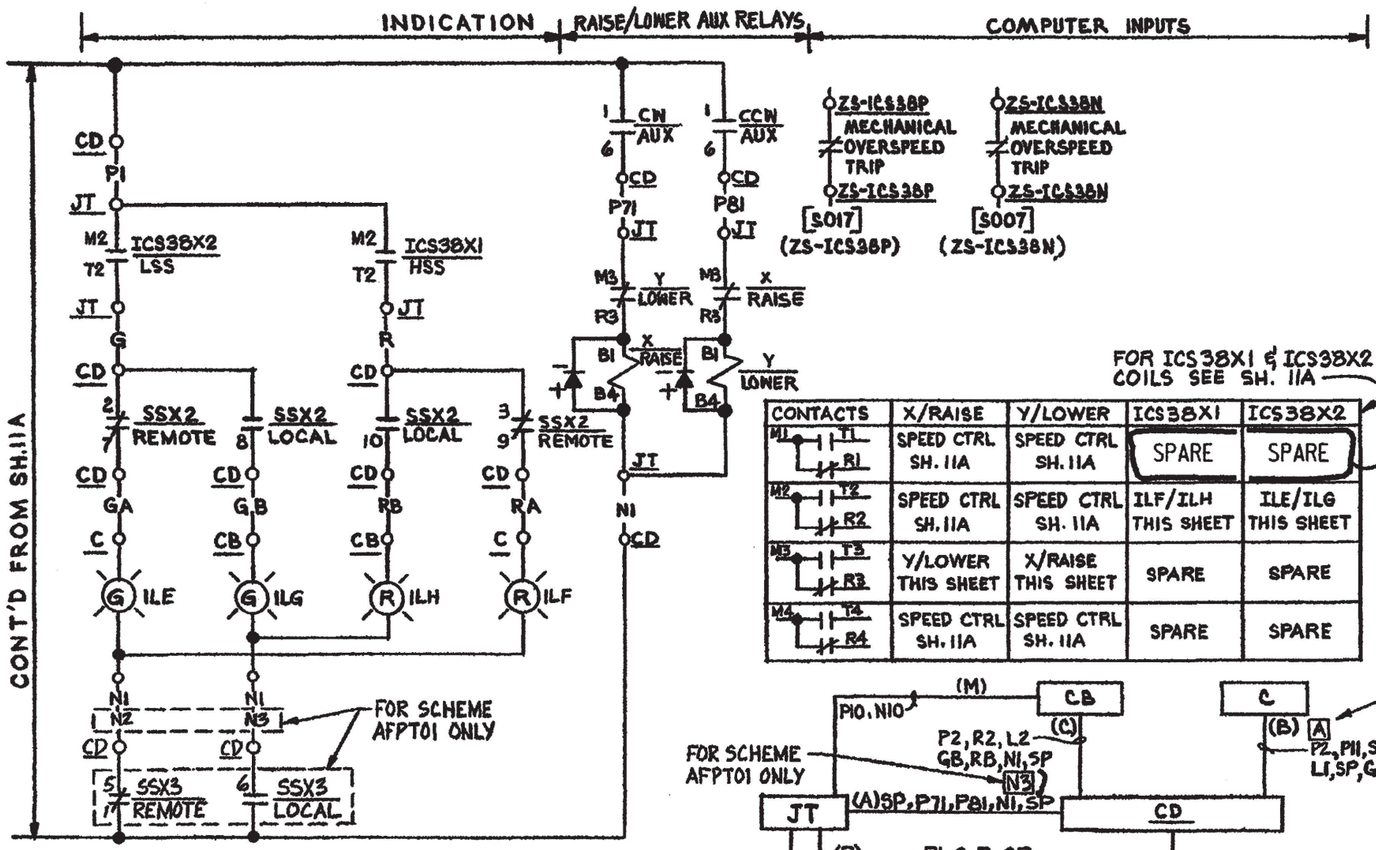

NOTES:

1. FOR GENERAL NOTES, SEE DWG. INDEX E-45B
2. FOR HIS/A SWITCH DEVELOPMENT SEE E-30B, SH. 11, FIG. 5
   FOR HIS/C SWITCH DEVELOPMENT SEE E-30B, SH. 11, FIG. 5A
3. DELETED
5. TAG NUMBER FOR HIGH SPEED STOP LIMIT SWITCH IS ZS-ICS38Q FOR CHANNEL 1 & ZS-ICS38S FOR CHANNEL 2.
6. TAG NUMBER FOR LOW SPEED STOP LIMIT SWITCH IS ZS-ICS38R FOR CHANNEL 1 & ZS-ICS38T FOR CHANNEL 2.

FOR ICS38X1 & ICS38X2 COILS SEE SH. 11A

CONTACTS	X/RAISE	Y/LOWER	ICS38X1	ICS38X2
M1 T1 R1	SPEED CTRL SH. 11A	SPEED CTRL SH. 11A	SPARE	SPARE
M2 T2 R2	SPEED CTRL SH. 11A	SPEED CTRL SH. 11A	ILF/ILH THIS SHEET	ILE/ILG THIS SHEET
M3 T3 R3	Y/LOWER THIS SHEET	X/RAISE THIS SHEET	SPARE	SPARE
M4 T4 R4	SPEED CTRL SH. 11A	SPEED CTRL SH. 11A	SPARE	SPARE

17

FOR ICS38X3 & ICS38X4 COILS SEE SHEET 11A

CONTACTS	ICS38X3	ICS38X4
9 5 1	SPEED CTRL SHEET 11A	SPEED CTRL SHEET 11A
10 6 2	DO NOT USE	DO NOT USE
11 7 3	SPARE	SPARE
12 8 4	SPARE	SPARE

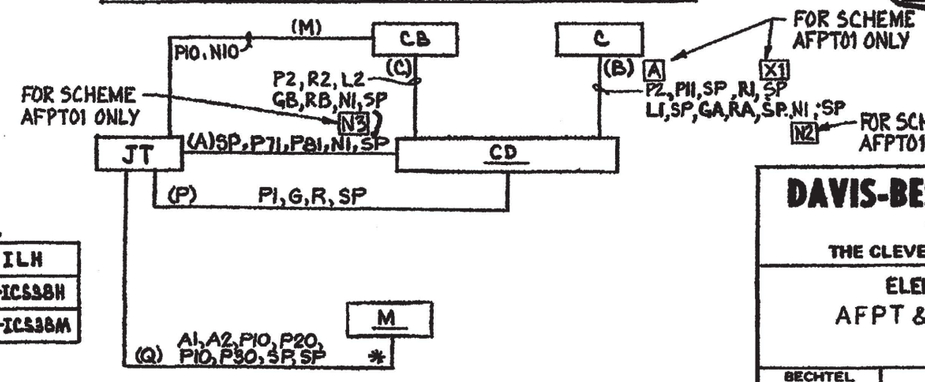

INDICATING LIGHT TABLE

ILE	ILF	ILG	ILH
IL-ICS38E	IL-ICS38F	IL-ICS38G	IL-ICS38H
IL-ICS38J	IL-ICS38K	IL-ICS38L	IL-ICS38M

*-16 AWG

BLOCK DIAGRAM

THIS DRAWING WAS REDRAWN ON CAD AND SUPERSEDES REVISION 16

DAVIS-BESSE NUCLEAR POWER STATION

THE TOLEDO EDISON COMPANY
THE CLEVELAND ELECTRIC ILLUMINATING COMPANY

ELEMENTARY WIRING DIAGRAM
AFPT & MFPT CONTROL & AUXILIARIES
AFPT CONTROL

BECHTEL COMPANY	JOB NO.	DRAWING NO.	REV.
	7749	E-45B SH-11B	17

DB 12-04-08 DFN F:/SCHEME/E45BSH11B.DGN/TIF

REV.	DESCRIPTION	DATE	DR	CHK	SUPV	CHIEF	PROJ	OWNER	OWNER
17	INC. DCN's E-45B-203 & 204 PER ECP 01-0471-00 (REDRAWN) & GEN. UPDATE CORRECT DCN PREFIX IN REV. 16 FROM "E-458" TO "E-45B"	12/20/08	SBW	SRS					
16	INC. DCN E-45B-193 PER MOD 94-0014 SUPP. 0	10/15/98	RS	LEW					
1	REDRAWN TO ADD AFPT AUTO ESSEN. CONTROL	3/6/78							

G-231-0

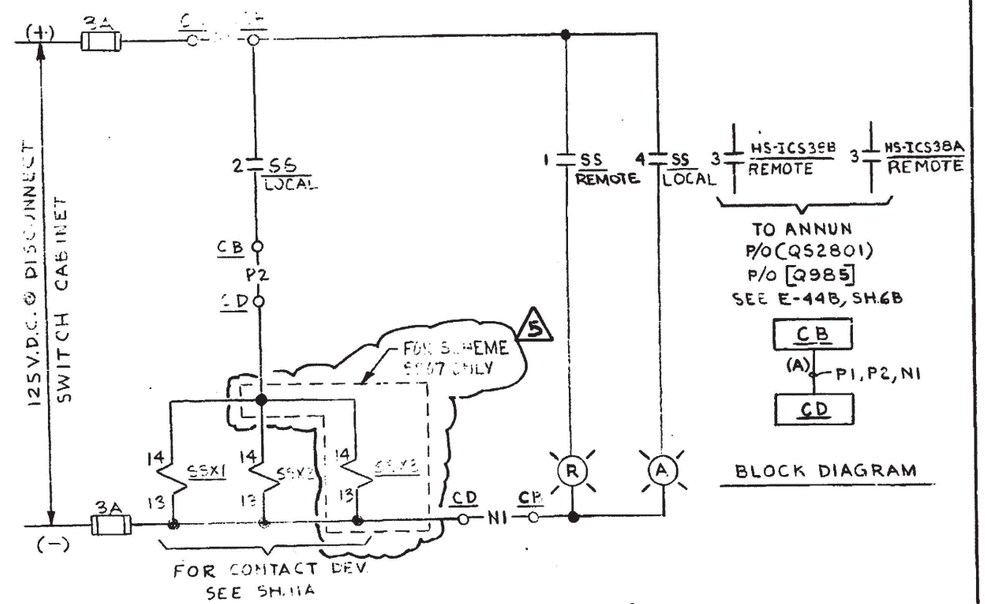

BLOCK DIAGRAM

SCHEME NO. (SEE TABLE BELOW)

SCHEME NO.	START UP NO.	CHANNEL	SS	EQUIPMENT		DESCRIPTION
				CD	CB	
SD07	50	1	HS-ICS38B	CDE12A-1	C3630	AFPT 1 GOV. CTRL. SEL. CRKT.
SD08	50	2	HS-ICS38A	CDF12A-1	C3630	AFPT 2 GOV. CTRL. SEL. CRKT.

NOTES:

1. FOR GEN. NOTES SEE DWG INDEX E-45B
2. DELETED
3. FOR SS SWITCH DEVELOPMENT SEE E-30B SH11, FIG.4A

DAVIS-BESSE NUCLEAR POWER STATION

THE TOLEDO EDISON COMPANY
THE CLEVELAND ELECTRIC ILLUMINATING COMPANY

ELEMENTARY WIRING DIAGRAM
AFPT & MFPT CONTROL & AUXILIARIES
AFPT CONTROL

BECHTEL COMPANY	JOB NO.	DRAWING NO.	REV.
	7749	E-45B SH-11C	5

REV.	DESCRIPTION	DR	CHK	SUPV	CHIEF	PROJ	OWNER	OWNER
4	"AS-BUILT" FOR MOD 87-1105, INC. DCN E-45B-125.	RAB 5/11/94	WEW 5/11/94	PN 5/11/94				
5	INC. DCN E-45B-194 PER MOD 94-0014 SUPP. 0	JOR 10/24/94	JBW 10/24/94					
0	ISSUED FOR CONSTRUCTION	RS 3/5/75	LEW	SKS		PK	—	—

G-231-D

I CERTIFY THAT THE IMAGE CONTAINED ON THIS FRAME WAS MADE IN THE NORMAL AND REGULAR COURSE OF BUSINESS ON THE DATE STATED BELOW AND THAT IT IS AN ACCURATE REPRODUCTION OF THE RECORD(S) SUBMITTED TO NUCLEAR RECORDS MANAGEMENT.

12-1-94 OPERATOR Dick Cunningham 6X

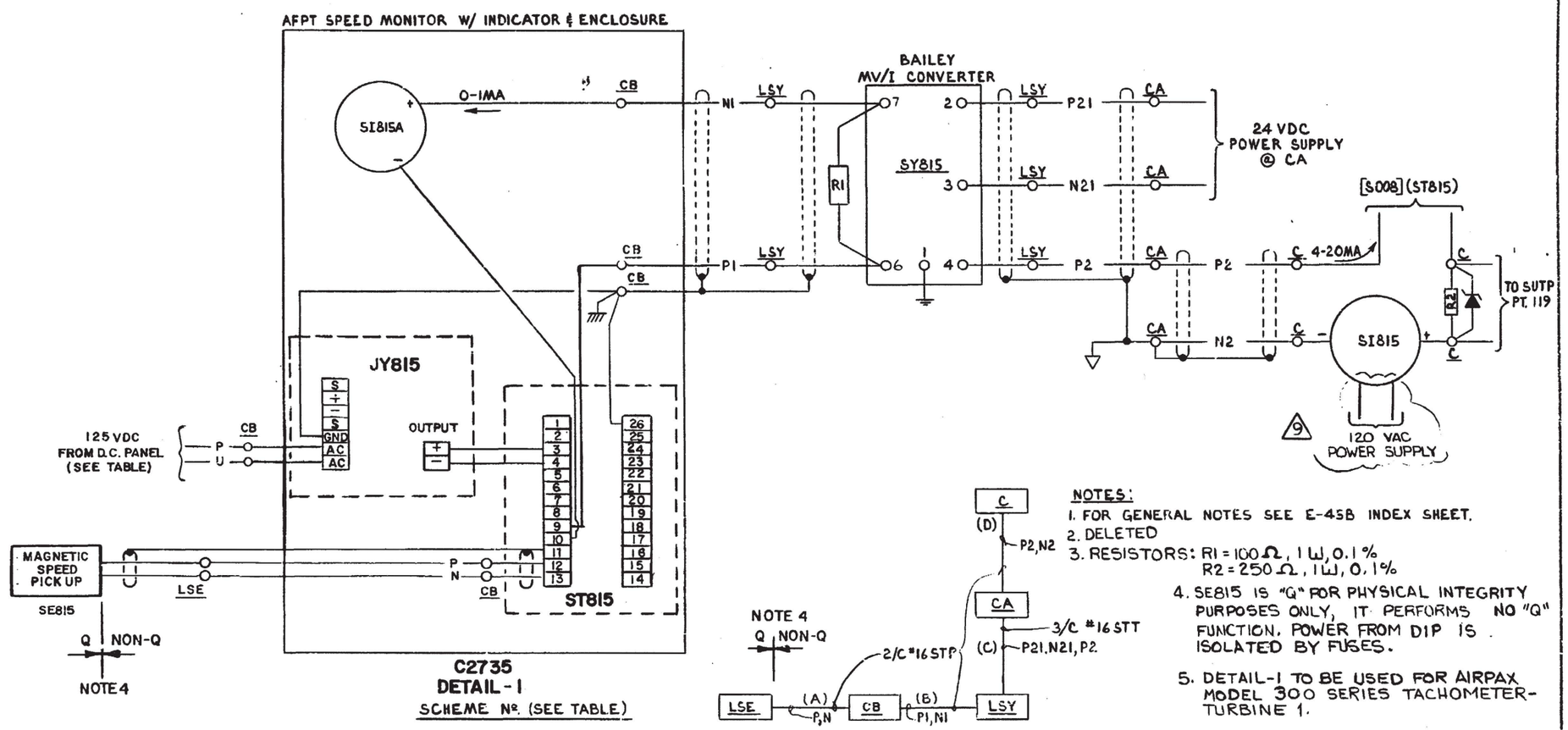

BLOCK DIAGRAM

NOTES:

1. FOR GENERAL NOTES SEE E-45B INDEX SHEET.
2. DELETED
3. RESISTORS: R1 = 100 Ω, 1 W, 0.1 %
   R2 = 250 Ω, 1 W, 0.1 %
4. SE815 IS "Q" FOR PHYSICAL INTEGRITY PURPOSES ONLY, IT PERFORMS NO "Q" FUNCTION. POWER FROM DIP IS ISOLATED BY FUSES.
5. DETAIL-1 TO BE USED FOR AIRPAX MODEL 300 SERIES TACHOMETER-TURBINE 1.

SCHEME NO.	START-UP NO.	CHANNEL	D.C.PNL	DEVICES					
S815	50	A	DIP24	SI815A	SI815	—	—	JY815	ST815

EQUIPMENT					DESCRIPTION
LSY	LSE	CB	C	CA	
LSY815	LSE815	C2735	C5706	C5758C	AFPT 1 SPEED MONITOR

9

DAVIS-BESSE NUCLEAR POWER STATION

THE TOLEDO EDISON COMPANY

THE CLEVELAND ELECTRIC ILLUMINATING COMPANY

ELEMENTARY WIRING DIAGRAM

AFPT & MFPT CONTROL AUXILIARIES

AFPT SPEED MONITOR-AFPT 1

BECHTEL COMPANY	JOB NO.	DRAWING NO.	REV.
	7749	E-45B SH-17	9

REV.	DESCRIPTION	DATE	DR	CHK	SUPV	CHIEF	PROJ	OWNER	OWNER
8	AS-BUILT FOR FCR'S 86, 320 SUPPLEMENTAL 20, INC DCN'S E-45B-82, 88								
9	AS-BUILT FOR FCR 87-068 INC. DCN E-45B-123	5-16-74	R.W.S	LEW	SMS				
0	ISSUED FOR CONSTRUCTION								

G-231-D

N15138

NEWFAX 3/85 N58313 EO 7489

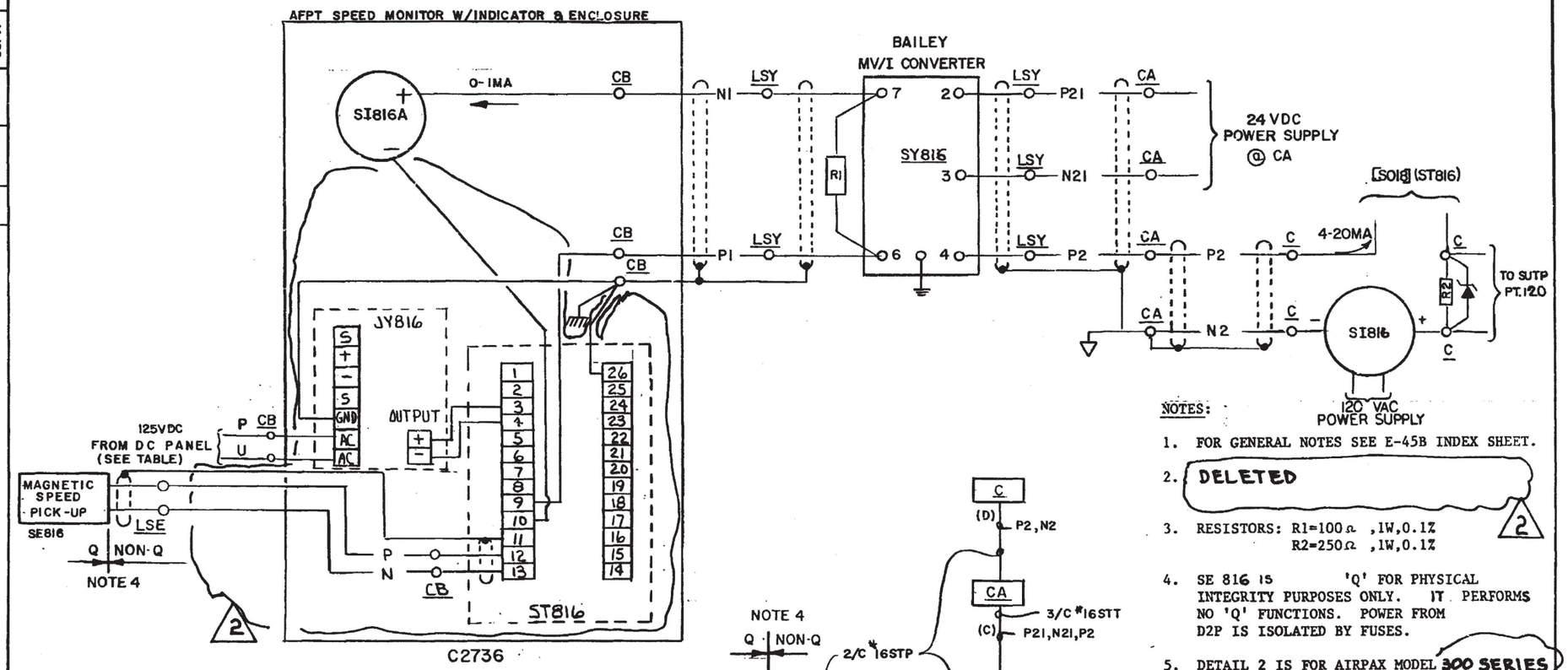

NOTES:

1. FOR GENERAL NOTES SEE E-45B INDEX SHEET.
2. DELETED 2
3. RESISTORS: R1=100Ω ,1W,0.1%
   R2=250Ω ,1W,0.1%
4. SE 816 IS 'Q' FOR PHYSICAL INTEGRITY PURPOSES ONLY. IT PERFORMS NO 'Q' FUNCTIONS. POWER FROM D2P IS ISOLATED BY FUSES.
5. DETAIL 2 IS FOR AIRPAX MODEL 300 SERIES TACHOMETER-TURBINE 2. 2

SCHEME NO.	START-UP NO.	CHANNEL	D.C.PNL.	DEVICES					
S816	50	B	D2P24	SI816A	SI816	—	—	JY816	ST816

EQUIPMENT					DESCRIPTION
LSY	LSE	CB	C	CA	
LSY816	LSE816	C2736	C5709	C5758F	AFPT 2 SPEED MONITOR

2

SCALE N/A	DESIGNED	DRAWN JLH	DATE 6-10-87

DAVIS-BESSE NUCLEAR POWER STATION
UNIT NO. 1
THE TOLEDO EDISON COMPANY

ELEMENTARY WIRING DIAGRAM
AFPT & MFPT CONTROL AUXILIARIES
AFPT SPEED MONITOR - AFPT 2

DRAWING NO.	REV.
E-45B SH-17A	2

NO.	DATE	REVISIONS	BY	CH'K	ENGR.	ENGR. SUPV.	GEN. SUPV.
2	11/15/89	INC. DCN E-45B-189 PER FCR 86-0406 SUP.0					
1	5/11/89	"AS-BUILT" FOR FCR 87-068, INC. DCN E-45B-147.	RAB				
0	3/8/88	"AS BUILT" FOR FCR'S 86-320 SUPP. 67, 86-406 SUPP. 00, INC. DCN'S E-45B-82, E-45B-88	JLH	JJS			

INDEX

SHEET NO.	LATEST REV.	DESCRIPTION	Q
1A	14	MAIN STM LINES ISOLATION VALVES (SOV)	Q
1B	17	MAIN STM LINES ISOLATION VALVES (SOV)	Q
1C	6	VOID	
1D	11	MAIN STM LINES ISOLATION VALVES (SOV)	Q
1E	9	MAIN STM LINES ISOLATION VALVES (SOV)	Q
1F	3	MAIN STM LINES ISOLATION VALVES (SOV)	Q
2	2	DELETED	
2A	1	DELETED	
2B	1	DELETED	
3	5	MAIN STM LINES WARM UP DRAIN VALVES (SOV)	Q
4A	25	AUX FEED PMPS TURBS MN STM IN ISO VLVS (MOV'S)	Q
4B	24	AUX FEED PMPS TURBS MN STM IN ISO VLVS (MOV'S)	Q
4C	3	DELETED	
5A	9	STEAM & CONDENSATE (MOV)	
5B	7	STEAM & CONDENSATE (MOV)	
6A	6	STEAM & CONDENSATE (COMBINED MOV'S)	
6B	7	STEAM & CONDENSATE (COMBINED MOV'S)	
6C	6	STEAM & CONDENSATE (COMBINED MOV"S)	
7A	8	MS EXTR TO MSR 2ND STAGE VALVES (MOV'S)	
7B	6	MS EXTR TO MSR 2ND STAGE VALVES (MOV'S)	
7C	3	MS EXTR TO MSR 2ND STAGE VALVES (MOV'S)	
8	4	DEMIN WATER TRANS PUMP DISCHARGE VALVE (MOV)	
9A	5	HEATER DRAIN PUMP MOTORS	
9B	6	HEATER DRAIN PUMP MOTORS	
10A	8	CONDENSATE PUMP MOTORS	
10B	9	CONDENSATE PUMP MOTORS	
11	6	CONDENSATE PUMPS RECIRC VALVE (SOV)	
12	7	HP EXTR DRAIN VALVES (SOV'S)	
13	6	LP EXTR DRAIN VALVES (SOV'S)	
14	6	FW HTR SU DRAIN VALVES (SOV'S)	
15	9	TURB STM SEAL DIVR VLV HP COND (SOV)	
16	5	CONDENSATE FLASH TANK VLV TO HTR 1-2 & 2-2 (SOV)	

FOR CONTINUATION OF INDEX SEE SH.2.

REV	DATE	DESCRIPTION	BY	CH'K	ENGR.	ENGR. SUPV.	GEN. SUPV.
94	5-6-12	REVISED SH. 4A (REV.25), REVISED SH.21, (REV.6), REVISED SH.46A (REV.21), & REVISED SH.54B (REV.19)		"INITIALS ON FILE"			
93	07/07/11	REVISED SH. 4B (REV.24), SH. 27 (REV.12) & SH.46A (REV.20)		"INITIALS ON FILE"			
→ 95	6/12/14	INC. DUN 08-0573-005-002 REV.00 & REVISED SH. 56 & 67 (REV.1) & SH.66A (REV.4)	SBW SBW	CHC	—	JRC	—

GENERAL NOTES:

1. FOR EXPLANATION OF EQUIPMENT & WIRING NUMBERS SEE 7749-11A, ELECTRICAL NUMBERING SYSTEM.
2. FOR MOTOR INFORMATION SEE 7749-E-12B, ELECT. MOTOR LIST.
3. FOR CONTROL PANEL, MCC, DESCRIPTIONS SEE E-13B ELECT. EQUIPMENT LIST.
4. WIRE NUMBER PREFIX MUST BE ADDED TO FORM COMPLETE WIRE NUMBER FOR THOSE WIRES AT MAIN CONTROL BOARD.
5. AUX CONTROL RELAY IN SOLENOID OPERATED VALVE CONTROL CIRCUITS TO BE COUCH TYPE 4AP.
6. NUMBER IN BRACKETS [ ] REPRESENTS COMPUTER INPUT NUMBER. NUMBERS IN PARENTHESIS ( ) REPRESENTS COMPUTER INPUT SOURCE NUMBER.

REFERENCE DRAWINGS:

E-5 SH.1 THRU 5 - 480V MCC (NON-ESSENTIAL) ONE LINE DIAGRAM

E-6 SH.1,2 - 480V MCC (ESSENTIAL) ONE LINE DIAGRAM

E-10A - STANDARD NOTES AND SYMBOLS

E-11A - ELECTRICAL NUMBERING SYSTEM

E-12B - MOTOR LIST

E-14B - SOLENOID VALVE LIST

E-30B - GENERAL GUIDES - ELEMENTARY DIAGRAM

THIS DRAWING WAS REDRAWN ON CAD AND SUPERSEDES REVISION 64.

SCALE NONE	DESIGNED	DRAWN JLH	DATE 12-20-89

DAVIS-BESSE NUCLEAR POWER STATION
UNIT NO. 1
THE TOLEDO EDISON COMPANY

ELEMENTARY WIRING DIAGRAMS

DRAWING INDEX

Q

DRAWING NO.	REV.
E-46B SH.1	95

INDEX

SHEET NO.	LATEST REV.	DESCRIPTION	Q
17A	7	CNDS DEMIN HOLD-UP TANK OUTLET VLV'S	
17B	3	CNDS DEMIN HOLD-UP TANK OUTLET VLV'S	
17C	1	CNDS DEMIN BKWASH STRNR AUX RELAY	
17D	4	CNDS DEMIN HOLD-UP TANK'S OUT VLV'S	
18	9	STEAM SOLENOID OPERATED VALVES	
19A	4	FW HTR SOLENOID OPERATED VLV'S	
19B	2	FW HTR SOLENOID OPERATED VLV'S	
19C	1	FW HTR SOLENOID OPERATED VLV'S	
20	7	DEAR HTR LP TURB EXT (SOV'S)	
21	6	MISC MOTOR OPERATED VALVES	
22	5	DEAR HTRS LP EXT DRN (SOV'S)	
23A	6	SG ATM STM VENT & SAMPLE VLV'S	Q
23B	9	SG ATM STM VENT & SAMPLE VLV'S	Q
24	5	MN STM LINES BEFORE STOP VLV'S WU VLV'S (SOV'S)	
25	4	MISC CHEMICAL PUMPS & MIXERS	
26	7	BACKWASH RECEIVING SUMP PUMPS	
27	12	MECH HOGGER 1-1 VAC PUMP 1-1	
28	6	MECH HOGGER COOLER CIRC PUMP 1-1	
29	10	STM HOGGER AUX STM INLET VALVE	
30	10	FW HTR SOLENOID OPERATED VALVES	
31	7	SUMP PUMPS	
32A	5	MAIN STM LINES ISO VALVES WU VALVES (SOV'S)	Q
32B	6	MAIN STM LINES ISO VALVES WU VALVES (SOV'S)	Q
33	15	STEAM GENERATOR DRAIN VLV	Q
33A	4	STEAM GENERATOR DRAIN VLV	Q
33B	0	STEAM GENERATOR DRAIN VLV	
33C	3	STEAM GENERATOR DRAIN VLV	
34	4	TURB BYPASS DESUPERHTNG VLV	
35	4	COND PIT FLOOD PMP 1-1 & 1-2	
36	2	CNDS PMPS RUNOUT VLV	
37	8	TURB BYPASS VLV & MN STM ATM VENT VLV	
38	4	CNDS POLISHING DEMIN HOLD UP PMP	
39A	2	CNDS POLISHING DEMIN MISC AGITATOR	
39B	6	CNDS POLISHING DEMIN MISC PMPS	
40	2	CNDS POLISHING DEMIN DUST EVACUATOR	
41A	5	VOID	
41B	5	FW HTR MOV'S	
42	1	LP COND MU & CNDS STRG IN VLV'S	
43	3	CNDS DEMIN WST DRUMMING OUT VLV	
44A	6	CNDS POL DEMIN WST XFER PMP'S	
44B	2	CNDS POL DEMIN WST XFER PMP'S	
45A	3	STEAM & CONDENSATE (COMBINED MOV'S)	
45B	3	STEAM & CONDENSATE (COMBINED MOV'S)	
45C	3	STEAM & CONDENSATE (COMBINED MOV'S)	
46A	21	SG AFP 1 ISO VLV	Q
46B	17	SG AFP 1 ISO VLV	Q
47	1	HTR DRAIN & COND PMPS COMPUTER CKTS	
48	3	CNDS DEMIN PRIMING VALVES	
49	4	VOID	
50	5	VOID	
51	6	VOID	
52	6	DELETED	Q
53	3	CNDS VACCUM PMP DISCHARGE RADIATION MNTR AUX RELAYS	
54A	14	AUX FD PMP TURB MN STM IN ISO VLV	Q
54B	19	AUX FD PMP TURB MN STM IN ISO VLV	Q
55A	2	MSR 2ND STAGE STEAM SUPPLY MOV	
55B	1	MSR 2ND STAGE STEAM SUPPLY MOV	
56	[1] 95	MSR AUX RELAYS	
57	0	MSR AUX RELAYS	
58	1	DELETED	
59	3	MSR DRAIN VALVES	
60	3	MSR DRAIN VALVES	
61	3	MSR DRAIN VALVES	
62	3	MSR DRAIN VALVES	
63	3	MSR DRAIN VALVES	

FOR GENERAL NOTES AND REFERENCE DRAWINGS SEE DRAWING E-46B DRAWING INDEX SH.1.

FOR CONTINUATION OF INDEX SEE SH.3.

THIS DRAWING WAS REDRAWN ON CAD AND SUPERSEDES REVISION 64.

SCALE NONE	DESIGNED	DRAWN JLH	DATE 12-22-89

DAVIS-BESSE NUCLEAR POWER STATION
UNIT NO. 1
THE TOLEDO EDISON COMPANY

ELEMENTARY WIRING DIAGRAMS
STEAM & COND.
DRAWING INDEX

Q

DRAWING NO.	REV.
E-46B SH.2	95

DB 06-10-14 DFN= F:/SCHEME/E46BIS01.DGN

NEWFAX 3/85 N58313

ED 7489

INDEX

SHEET NO.	LATEST REV.	DESCRIPTION	Q
64	1	DEAR STRG TK LEVEL AUX RELAYS	
65	1	DEAR FD VALVES	
66	1	STEAM & CONDENSATE DEAER HTR NON RETURN VLV'S	
66A	4	TURB BYPASS VALVES	
66B	1	TURB BYPASS VALVES	
67	1	STEAM & CONDENSATE TURB TRIP AUX RELAY	
68	0	VOID	
69	1	VOID	
70	2	VOID	
71	6	AFPT MN STM IN ISO VLVS	Q
75	2	VOID	
75A	2	VOID	
77	1	MDFP-POSITION INDICATION FOR MANUAL GATE VALVES	
78A	3	STEAM CONDENSATE SG ATM VENT VALVES	Q
78B	2	STEAM CONDENSATE SG ATM VENT VALVES	Q
79A	3	STEAM CONDENSATE SG ATM VENT VALVES	Q
79B	3	STEAM CONDENSATE SG ATM VENT VALVES	Q
81	4	STM & CONDENSATE ANNUN POINT P012 REFLASH	
82	3	STM & CONDENSATE ANNUN POINT P012 REFLASH	
83A	0	RELAY KP011 FOR ANNUN/COMP PT P011 AFPT1 STM IN LP	
83B	0	RELAY KP012 FOR ANNUN/COMP PT P012 AFPT2 STM IN LP	
84	1	TURBINE BYPASS CONDENSATE BLOWDOWN VALVES	
88	0	INDICATING LIGHTS FOR MS738	
89	0	MOISTURE SEPARATOR DRAIN DEMINERALIZER 95	

FOR GENERAL NOTES AND REFERENCE DRAWINGS SEE DRAWING E-46B DRAWING INDEX SH.1.

THIS DRAWING WAS REDRAWN ON CAD AND SUPERSEDES REVISION 64.

SCALE NONE	DESIGNED	DRAWN JLH	DATE 12-22-89

DAVIS-BESSE NUCLEAR POWER STATION
UNIT NO. 1
THE TOLEDO EDISON COMPANY

ELEMENTARY WIRING DIAGRAMS
STEAM & COND.
DRAWING INDEX

Q

DRAWING NO.	REV.
E-46B SH.3	95

DR 06-10-14 DEN E:/SCHEME/E46BIS01.DGN

NEWFAX 3/85 N58313 ED 7489

NO.	DATE	REVISIONS	BY	CH'K	ENGR.	ENGR. SUPV.	GEN. SUPV.
14	8-26-96	INC. DCN E-46B-576 & 578 FOR MOD 93-0051-00	KNF	DVK	—	—	—
13	3/21/91	INC. DCN E-46B-361 PER DCR 89-0210		"INITIALS ON FILE"			
12	9/18/89	"AS-BUILT" FOR FCR 87-063, INC. DCN E-46B-175 & 176; MOD 87-1107 SUPP.2, INC. DCN E-46B-232 & 233, SUPP.4, GEN. UPDATE, INC. DCN E-46B-300 "REDRAWN"		"INITIALS ON FILE"			

SEE SF-0038 SH.9 (10)

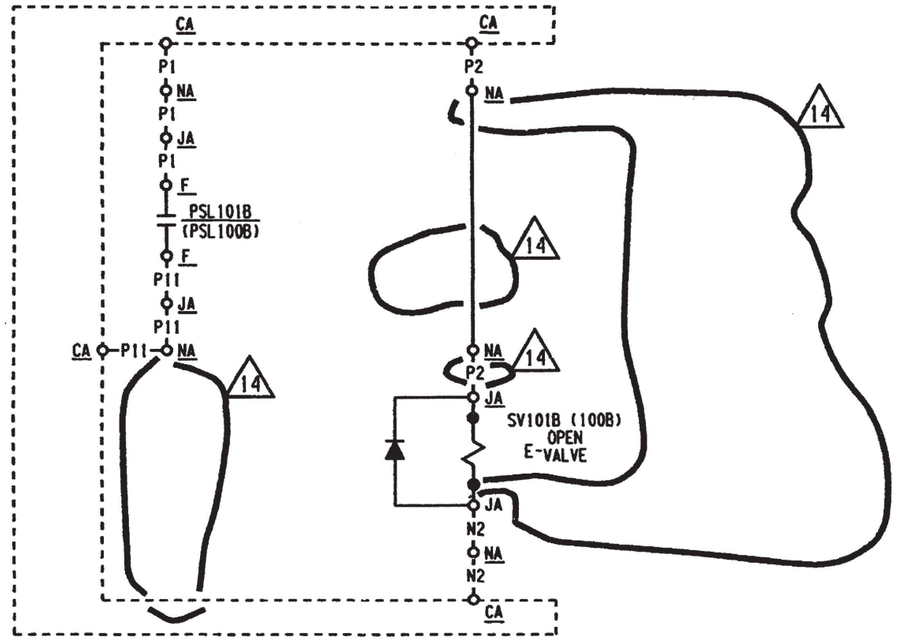

SCHEME NO. (SEE TABLE)

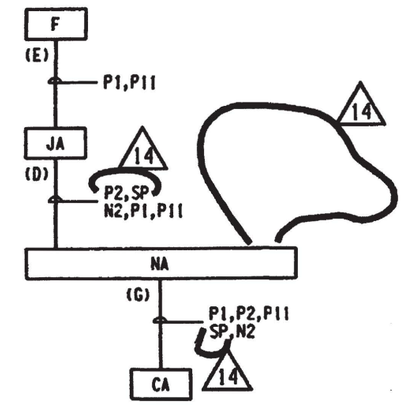

BLOCK DIAGRAM
(SEE NOTE 6)

NOTES:

1. FOR GENERAL NOTES, SEE E-46B INDEX SHEET.
2. DELETED
3. DELETED
4. DELETED
5. FOR CONTROL POWER, SFRCS LOGIC AND CONTROL SWITCH (CS) OPERATION SEE SF-003B SH.9(10).
6. CABLES TO BE ROUTED DIFFERENTLY FROM SCHEMES FV101A(FV101B) ON SH. 1D.
7. PSL CONTACT OPENS ON LOW AIR PRESSURE TO PILOT SOLENOID (SOLENOID DE-ENERGIZED).

SCHEME NO.	SU. NO.	CHANNEL	EQUIPMENT								DESCRIPTION
				JA	JB	NA	CA			F	
FV101B	83	1		JT6801		NSV101	C5762A			FPSL101B	MN. STM. LINE 1 VISO. VALVE
FV100B	83	2		JT6703		NSV100	C5792			FPSL100B	MN. STM. LINE 2 VISO. VALVE

14

THIS DRAWING WAS REDRAWN ON CAD AND SUPERCEDES REVISION 11

SCALE NONE	DESIGNED	DRAWN JOR	DATE 05-31-89

DAVIS-BESSE NUCLEAR POWER STATION
UNIT NO. 1
THE TOLEDO EDISON COMPANY

ELEMENTARY WIRING DIAGRAM
STEAM AND CONDENSATE
MN STM LINE ISO VALVES

Q

DRAWING NO.	REV.
E-46B SH.1A	14

DB 07-17-96 DFN= DBNPS/SCHEME/E46BS1A .DGN

B A 10 A B

I CERTIFY THAT THE IMAGE CONTAINED ON THIS FRAME WAS MADE IN THE NORMAL AND REGULAR COURSE OF BUSINESS, ON THE DATE STATED BELOW AND THAT IT IS AN ACCURATE REPRODUCTION OF THE RECORD(S) SUBMITTED TO NUCLEAR RECORDS MANAGEMENT.

DATE 8-30-96 OPERATOR Dorothy Wicks

16X

3 4 10 4 3

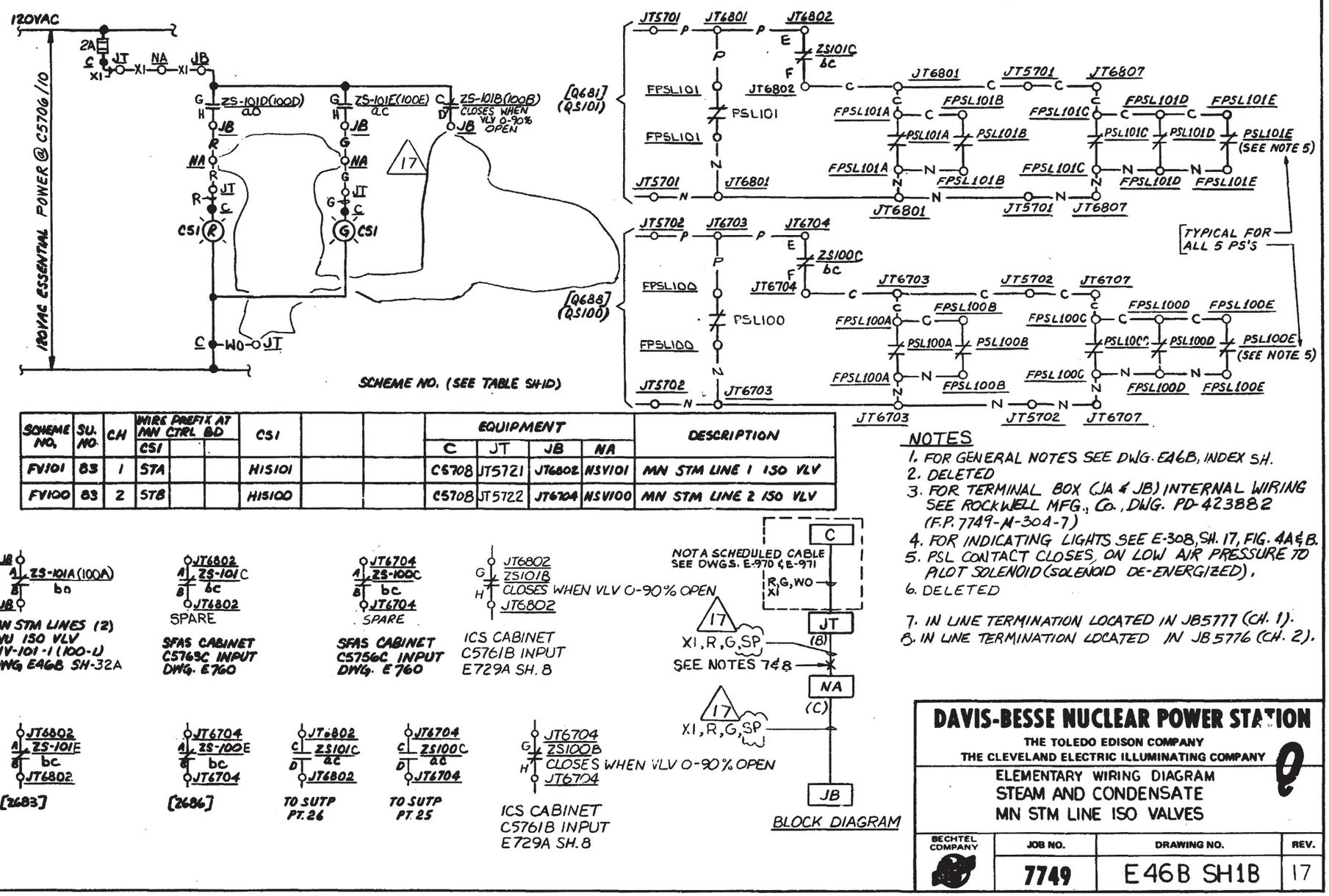

SCHEME NO.	SU. NO.	CH	WIRE PREFIX AT MN CTRL BD CS1			CS1			EQUIPMENT C	JT	JB	NA	DESCRIPTION
FV101	83	1	STA			HIS101			C5708	JT5721	JT6802	NSV101	MN STM LINE 1 ISO VLV
FV100	83	2	STB			HIS100			C5708	JT5722	JT6704	NSV100	MN STM LINE 2 ISO VLV

BLOCK DIAGRAM

NOTES

1. FOR GENERAL NOTES SEE DWG. E46B, INDEX SH.
2. DELETED
3. FOR TERMINAL BOX (JA & JB) INTERNAL WIRING SEE ROCKWELL MFG., Co., DWG. PD-423882 (F.P. 7749-M-304-7)
4. FOR INDICATING LIGHTS SEE E-308, SH. 17, FIG. 4A&B.
5. PSL CONTACT CLOSES, ON LOW AIR PRESSURE TO PILOT SOLENOID (SOLENOID DE-ENERGIZED).
6. DELETED
7. IN LINE TERMINATION LOCATED IN JB5777 (CH. 1).
8. IN LINE TERMINATION LOCATED IN JB5776 (CH. 2).

DAVIS-BESSE NUCLEAR POWER STATION

THE TOLEDO EDISON COMPANY
THE CLEVELAND ELECTRIC ILLUMINATING COMPANY

ELEMENTARY WIRING DIAGRAM
STEAM AND CONDENSATE
MN STM LINE ISO VALVES

BECHTEL COMPANY	JOB NO.	DRAWING NO.	REV.
	7749	E46B SH1B	17

REV.	DESCRIPTION	DATE	DR	CHK	SUPV	CHIEF	PROJ	OWNER	OWNER
16	AS BUILT FOR MOD 87-1107, SUP. 2, INC. DCN E-46B-228, 231, SUP. 4, INC. DCN E-46B-301	9/1/8	GFB	KNF	DVK	MLA	JWLO	SNS	KEBOB
17	INC. DCNS E-46B-575 & 577 FOR MOD 93-0051-00	8-22-96							
0	ISSUED FOR CONSTRUCTION	8-27-93							

G-231-D

N19215

I CERTIFY THAT THE IMAGE CONTAINED ON THIS FRAME WAS MADE IN THE NORMAL AND REGULAR COURSE OF BUSINESS, ON THE DATE STATED BELOW AND THAT IT IS AN ACCURATE REPRODUCTION OF THE RECORD(S) SUBMITTED TO NUCLEAR RECORDS MANAGEMENT.

DATE 8-30-96 OPERATOR Dorothy Wicklk

16X

NEWFAX 3/85 N58313

ED 7489

NO.	DATE	REVISIONS	BY	CH'K	ENGR.	ENGR. SUPV.	GEN. SUPV.
11	8-24-96	INC. DCNS E46B-581 & 584 FOR MOD 93-0051-00	KNF	DVK	—	MAS	—
10	9/18/89	"AS-BUILT" FOR FCR 87-063, INC. DCN E-46B-179 & 180; MOD 87-1107 SUPP.3, INC. DCN E-46B-290 & 291, GEN. UPDATE, SUPP.4, INC. DCN E-46B-302 "REDRAWN"		"INITIALS ON FILE"			

SEE SF-003B SH.9 (10)

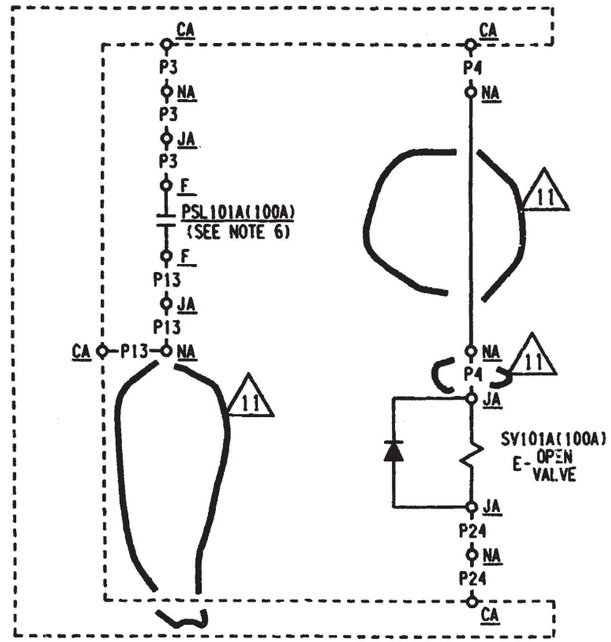

SCHEME NO. (SEE TABLE)

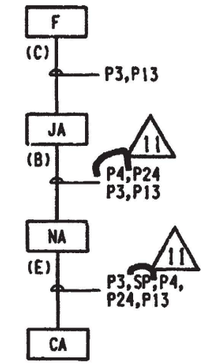

BLOCK DIAGRAM
(SEE NOTE 5)

NOTES:

1. FOR GENERAL NOTES, SEE E-46B INDEX SHEET.
2. DELETED
3. DELETED
4. FOR CONTROL POWER, SFRCS LOGIC AND CONTROL SWITCH (CS) OPERATION SEE SF-003B SH.9(10).
5. CABLES TO BE ROUTED DIFFERENTLY FROM SCHEMES FV101B(FV100B) ON SH.1A.
6. PSL CONTACT OPENS ON LOW AIR PRESSURE TO PILOT SOLENOID (SOLENOID DE-ENERGIZED).

SCHEME NO.	SU. NO.	CHANNEL	EQUIPMENT						DESCRIPTION
			JA	NA		CA	F		
FV101A	83	1	JT6801	NSV101		C5762A	FPSL101A		MN. STM. LINE 1 ISO. VALVE
FV100A	83	2	JT6703	NSV100		C5792	FPSL100A		MN. STM. LINE 2 ISO. VALVE

THIS DRAWING WAS REDRAWN ON CAD AND SUPERCEDES REVISION 9

SCALE NONE	DESIGNED	DRAWN JOR	DATE 05-31-89

DAVIS-BESSE NUCLEAR POWER STATION
UNIT NO. 1
THE TOLEDO EDISON COMPANY

ELEMENTARY WIRING DIAGRAM
STEAM AND CONDENSATE
MN STM LINE ISO VALVES

Q

DRAWING NO.	REV.
E-46B SH.1D	11

DB 07-17-96 DFN= D:\EL _ \E46BS1D .DGN

NETFAX 3/85 N58313 ED 7489

NO.	DATE	REVISIONS	BY	CH'K	ENGR.	ENGR. SUPV.	GEN. SUPV.
9	8-30-96	INC. DCN E-46B-583 & 585 FOR MOD 93-0051-00	KNF	DVK			
8	9-18-89	"AS-BUILT" FOR: FCR 87-063, INC. DCN E-46B-189 & 190, SUPP. 0, INC. DCN E-46B-284 & 282; MOD 87-1107 SUPP. 2, INC DCN E-46B-236 & 237, SUP.4 GEN. UPDATE, INC. DCN E-46B-303 "REDRAWN"		"INITIALS ON FILE"			

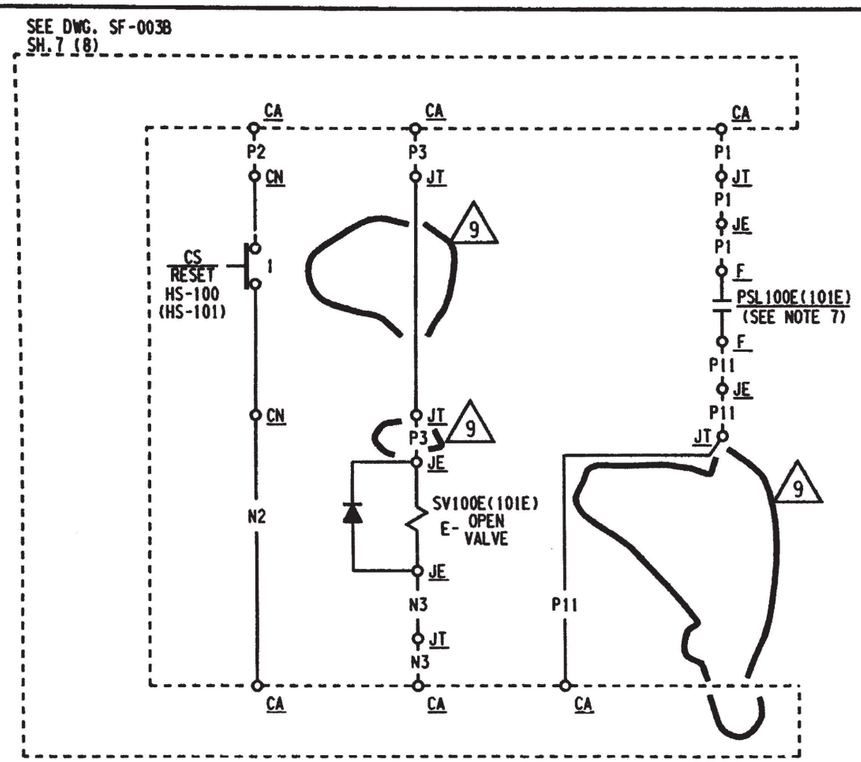

SCHEME NO. (SEE TABLE)

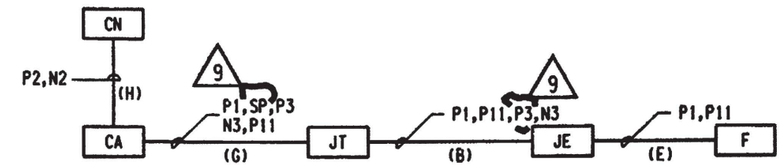

BLOCK DIAGRAM
(SEE NOTE 5)

NOTES:

1. FOR GENERAL NOTES, SEE E-46B INDEX SHEET.
2. DELETED
3. FOR CONTROL POWER, SFRCS LOGIC AND CONTROL SWITCH (CS) OPERATION SEE DWG. SF-003B SH.7(8).
4. DELETED
5. CABLES IN SCHEMES FV100E(FV101E) ARE TO BE ROUTED DIFFERENTLY FROM THOSE IN SCHEMES FV100D(FV101D).
6. DELETED
7. PSL CONTACT OPENS ON LOW AIR PRESSURE TO PILOT SOLENOID (SOLENOID DE-ENERGIZED).
8. DELETED
9. DELETED
10. JT6717(6811) IS PHYSICALLY LOCATED INSIDE NSV100E (101E).

SCHEME NO.	SU. NO.	CHANNEL	EQUIPMENT						DESCRIPTION
			CN	CA	JT	JE		F	
FV100E	83	1	C5762N	C5762A	JT6717	JT6707		FPSL100E	MN. STM. LINE 2 ISO. VALVE
FV101E	83	2	C5792N	C5792	JT6811	JT6807		FPSL101E	MN. STM. LINE 1 ISO. VALVE

THIS DRAWING WAS REDRAWN ON CAD AND SUPERCEDES REVISION 7

SCALE NONE	DESIGNED	DRAWN JCR	DATE 05-31-89

DAVIS-BESSE NUCLEAR POWER STATION
UNIT NO. 1
THE TOLEDO EDISON COMPANY

ELEMENTARY WIRING DIAGRAM
STEAM AND CONDENSATE
MN STM LINE ISO VALVES

Q

DRAWING NO.	REV.
E-46B SH.1E	9

DB 07-18-96 DFN= DBNPS/SCHEME /E46BS1E .DGN

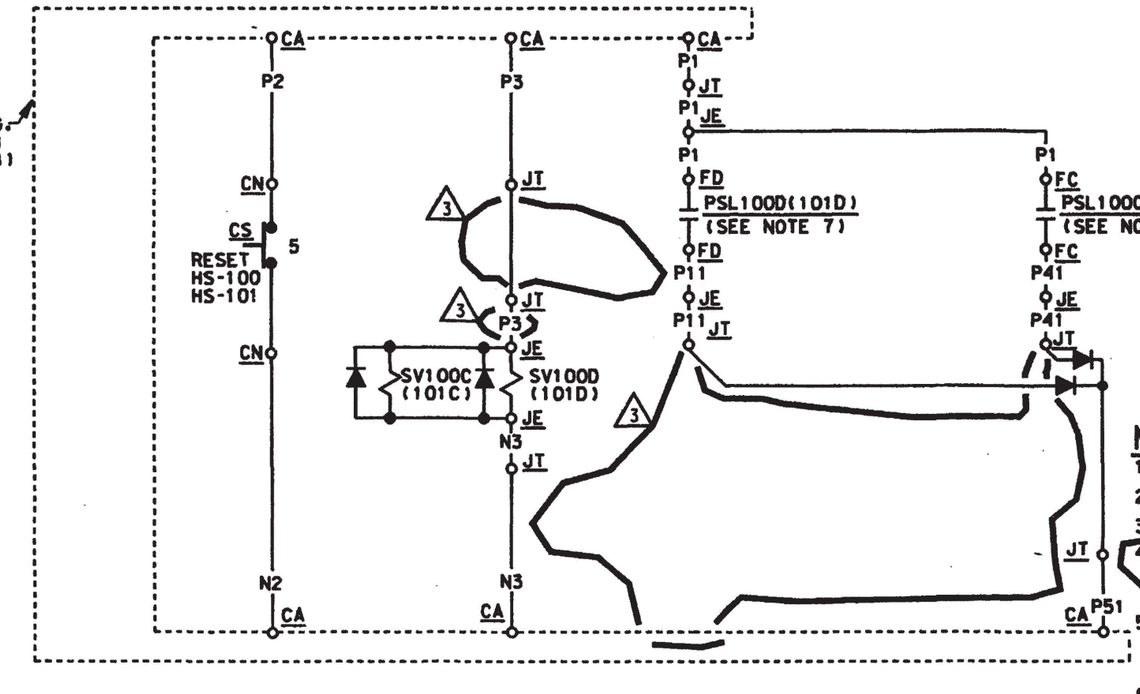

NOTES:

1. FOR GENERAL NOTES, SEE E-46B, INDEX SHEET.
2. FOR TEST SOLENOID P.B. SEE E-30B, SH.7, FIG.6.
3. FOR SFRCS SCHEMATIC SEE DWG. SF-003B SH.7(8).
4. DELETED
5. CABLES IN SCHEMES FV100E (FV101E) ARE TO BE ROUTED DIFFERENTLY FROM THOSE IN SCHEMES FV100D (FV101D).
6. DELETED
7. PSL CONTACT OPENS ON LOW AIR PRESSURE TO PILOT SOLENOID (SOLENOID DE-ENERGIZED).
8. DELETED
9. JT 6717 (6811) IS PHYSICALLY LOCATED INSIDE NSV100E (101E).
10. FOR RESET P.B. SWITCH SEE E-30 SH.18 FIG.12.

SCHEME NO. (SEE TABLE)

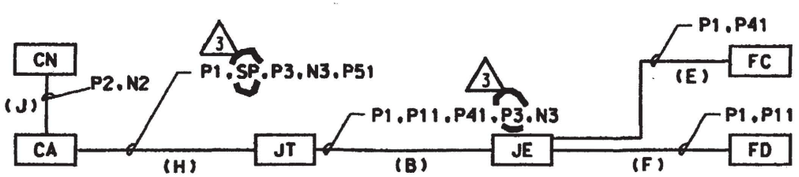

BLOCK DIAGRAM

(SEE NOTE 5)

SCHEME NO.	SU NO.	CH.	EQUIPMENT								DESCRIPTION
			CN	CA	JT	JE			FC	FD	
FV100D	83	1	C5762N	C5762A	JT6717	JT6707			FPSL100C	FPSL100D	MN.STM.LINE 2 ISO.VLV.
FV101D	83	2	C5792N	C5792	JT6811	JT6807			FPSL101C	FPSL101D	MN.STM.LINE 1 ISO.VLV.

REV.	DESCRIPTION	DATE	DR	CHK	SUPV	CHIEF	PROJ	OWNER	OWNER	OWNER
3	INC. DCN E-46B-582 & 586 FOR MOD 93-0051-00	3/21/91			"INITIALS ON FILE"					
2	INC. DCN E-46B-362 FOR DCR 89-0210	9/22/87			"INITIALS ON FILE"					
0	"AS BUILT" FOR FCR 77-342 SUPPL.3									

DAVIS-BESSE NUCLEAR POWER STATION

THE TOLEDO EDISON COMPANY
THE CLEVELAND ELECTRIC ILLUMINATING COMPANY

ELEMENTARY WIRING DIAGRAM
STEAM & CONDENSATE
MN STM LINE ISO VALVES

JOB NO.	DRAWING NO.	REV.
7749	E-46B SH1F	3

DB: 07-17-96 DFN=/LBNPS2/SCHEME/E46BS1F.DGN

NEWFAX 3/85 N58313 ED 7489

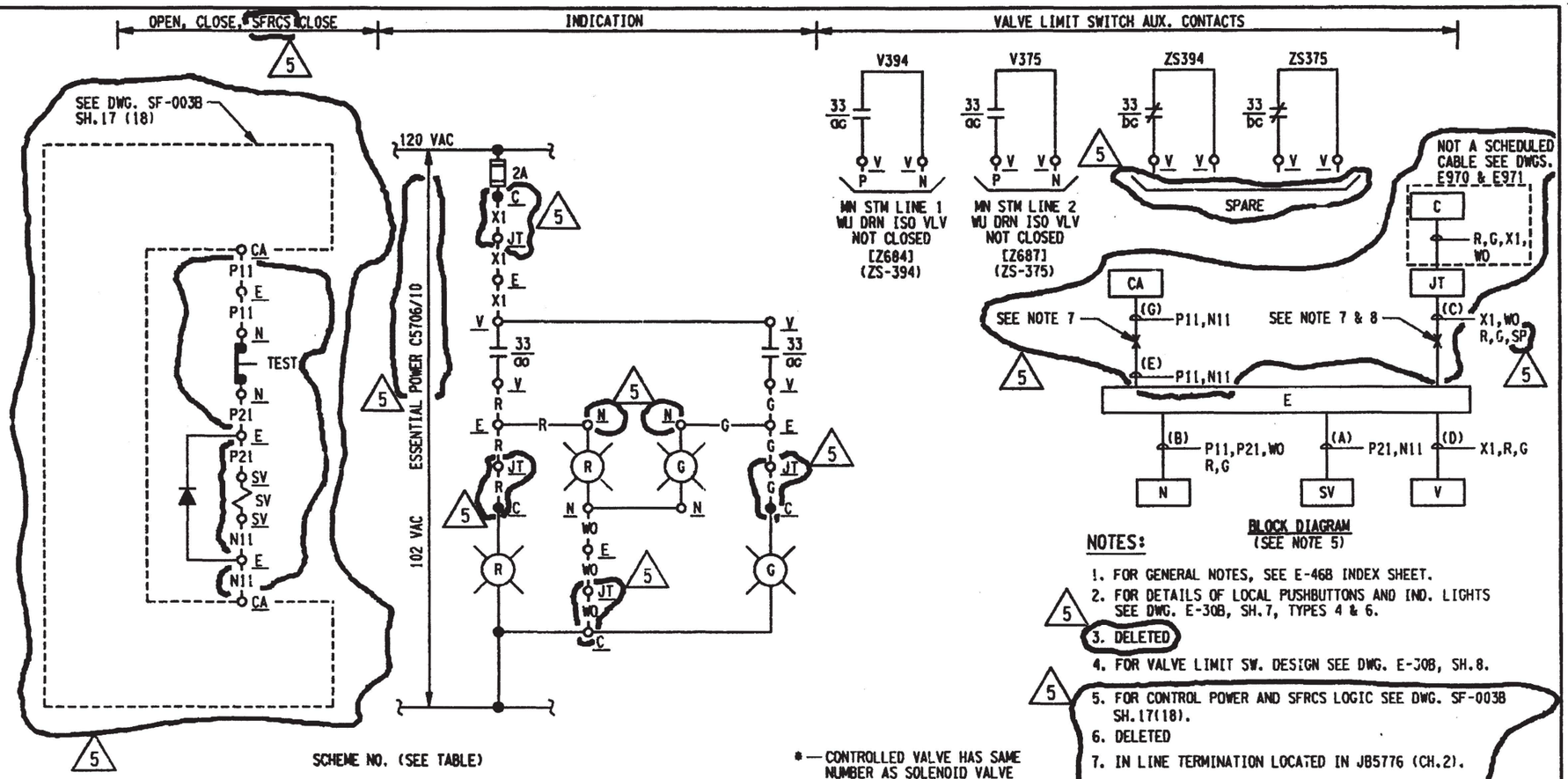

NOTES:

1. FOR GENERAL NOTES, SEE E-46B INDEX SHEET.
2. FOR DETAILS OF LOCAL PUSHBUTTONS AND IND. LIGHTS SEE DWG. E-30B, SH.7, TYPES 4 & 6.
3. DELETED
4. FOR VALVE LIMIT SW. DESIGN SEE DWG. E-30B, SH.8.
5. FOR CONTROL POWER AND SFRCS LOGIC SEE DWG. SF-003B SH.17(18).
6. DELETED
7. IN LINE TERMINATION LOCATED IN JB5776 (CH.2).
8. IN LINE TERMINATION LOCATED IN JB5777 (CH.1).

LEGEND

SCHEME NO.	SU. NO.	CHANNEL	WIRE PRE. AT MAIN CONT. BD.	CS	EQUIPMENT C	CA	JT	SV*	N	E						DESCRIPTION
V394	83	1	WDA		C5708	C5762A	JT5721	SV394	NV394	EV101B						MN STM LINE 1 WU DRN ISO VLV
V375	83	2	WDB		C5708	C5792	JT5722	SV375	NV375	EV100A						MN STM LINE 2 WU DRN ISO VLV

THIS DRAWING WAS REDRAWN ON CAD AND SUPERCEDES REVISION 4

SCALE NONE	DESIGNED	DRAWN JOR	DATE 05-31-89

DAVIS-BESSE NUCLEAR POWER STATION
UNIT NO. 1
THE TOLEDO EDISON COMPANY

ELEMENTARY WIRING DIAGRAM
STEAM AND CONDENSATE
MN STM LINES 1 & 2 WU DRN ISO VLVS

Q

DRAWING NO.	REV.
E-46B SH.3	5

NO.	DATE	REVISIONS	BY	CH'K	ENGR.	ENGR. SUPV.	GEN. SUPV.
5	9/18/89	"AS-BUILT" FOR FCR 87-063: INC. DCN E-46B-169, 269 & GEN. UPDATE; MOD 87-1107 SUPP.2, INC. DCN E-46B-224 & 225; MOD 87-1107 SUPP.4, INC. DCN E-46B-305 "REDRAWN"	JOR	GFB			

DB 07-27-89 DFN= D:\EL \ \E46BS3 .DGN

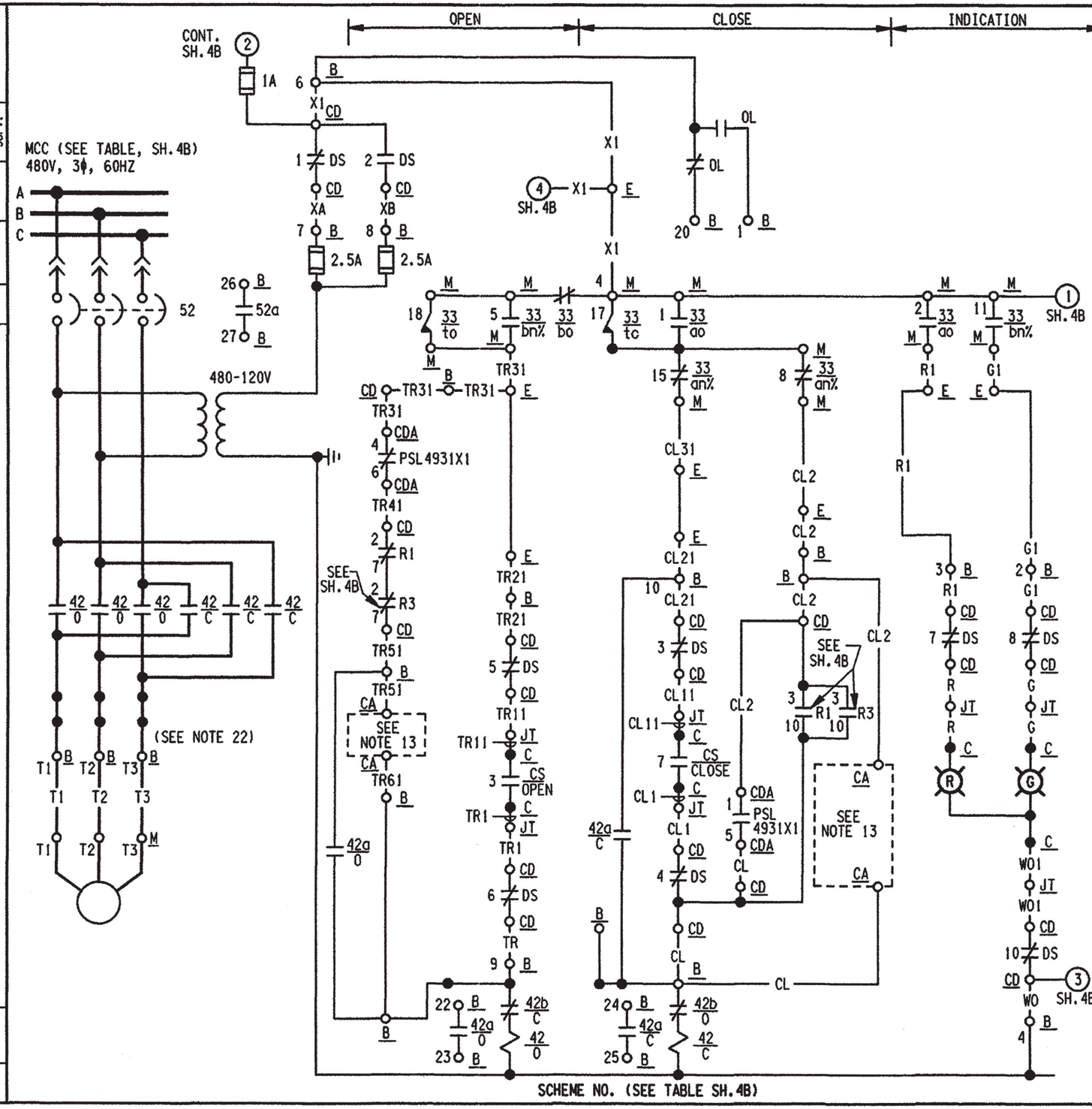

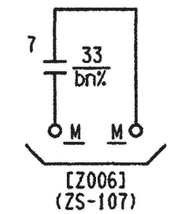

NOTES:

1. FOR LEGEND & BLOCK DIAG. SEE DWG. E-46B, SH.4B.
2. FOR GENERAL NOTES, SEE E-46B INDEX SHEET.
3. FIELD TO ADJUST ROTOR 4 SUCH THAT CONTACT 15 WILL PROVIDE SPECIFIED TARGET THRUST ON SEATING.
4. FOR C.S. DETAILS SEE DWG. E-30B SH.7, FIG.7.
5. FOR VLV LIMIT SWITCH DEV. SEE DWG. E-30B SH.8E, FIG.H (ALSO SEE NOTES 3, 6, AND 10 THIS SHEET).
6. FIELD TO ADJUST ROTOR 3 SUCH THAT CONTACT 11 CLOSES WHEN VALVE IS CLOSED, (I.E. AFTER HARD SEAT CONTACT) 25
8. DELETED
9. PSL4931A CONTACT CLOSES ON LOW PRESSURE AT AFP SUCTION.
10. FIELD TO ADJUST ROTOR #2 WITH SWITCH CONTACTS 5 THRU 8 TO ACTUATE WHEN VALVE REACHES 20% OPEN +5% -0%
13. FOR SFRCS BLOCK SWITCH AND SCHEMATIC SEE DWG. SF-003B SH.14.

(NOTES CONT'D ON SH.4B)

THIS DRAWING WAS REDRAWN ON CAD AND SUPERCEDES REVISION 16

SCALE NONE	DESIGNED	DRAWN JOR	DATE 05-31-89

DAVIS-BESSE NUCLEAR POWER STATION
UNIT NO. 1
THE TOLEDO EDISON COMPANY

ELEMENTARY WIRING DIAGRAM
STEAM AND CONDENSATE
AUX FD PMPS TURBS MN STM IN ISO VLVS

Q

DRAWING NO.	REV.
E-46B SH.4A	25

NO.	DATE	REVISIONS	BY	CH'K	ENGR.	ENGR. SUPV.	GEN. SUPV.
22	8/26/96	INC DCN E-46B-592 FOR DDR 95-2640 & E-46B-593 FOR MOD 93-0035-00	"INITIALS ON FILE"				
25	5-6-12	INC. DUN 11-0787-001-003 REV.00		"INITIALS ON FILE"			
24	04-16-10	INC. DUN 09-0588-001-003 REV.00					
23	10-11-03	INC DCN E-46B-615 PER ECR 03-0026-00 REV.01 (CR 03-05956)		"INITIALS ON FILE"			

DB 04-16-12 DFN=F:/SCHEME/E46BS04A.DGN

SCHEME NO.	SCHEME SHOWN ON SH. NO.	MCC	S.U. NO.	CHNL NO.	WIRE PREFIX AT MAIN CONT. BD	CS	EQUIPMENT										DESCRIPTION
								C		CD	CA	B	E	M	F1	CDA	
BF1124	4A	F11A	50	2	4A	HIS107A		C5709		CDF11A-2	C5792	BF1124	EV01070	MV01070	FPSL4931A	CDF11D	AUX FD PMP TURB2 MN STM IN ISO VLV
							EQUIPMENT										
							FA	FB	FC	FD	NCD	JT	EA	MA			
							FPSL107A	FPSL107B	FPSL107C	FPSL107D	NCDF11A	JT5722	EV0107A	MV0107A			

NOTES: (CONT'D FROM SHT. 4A)

14. DELETED. 24
15. DELETED.
16. FOR PB/RESET/BLOCK SEE E-30B, SH.6B, FIG. 6, TYPE 8.
17. PSL107A, B, C, D CLOSE ON LOW STM PRESS.
18. FOR NCD INDICATING LIGHTS, SEE E-30B, SH.7, TYPE 14A.

NOTES: (CONT'D BELOW)

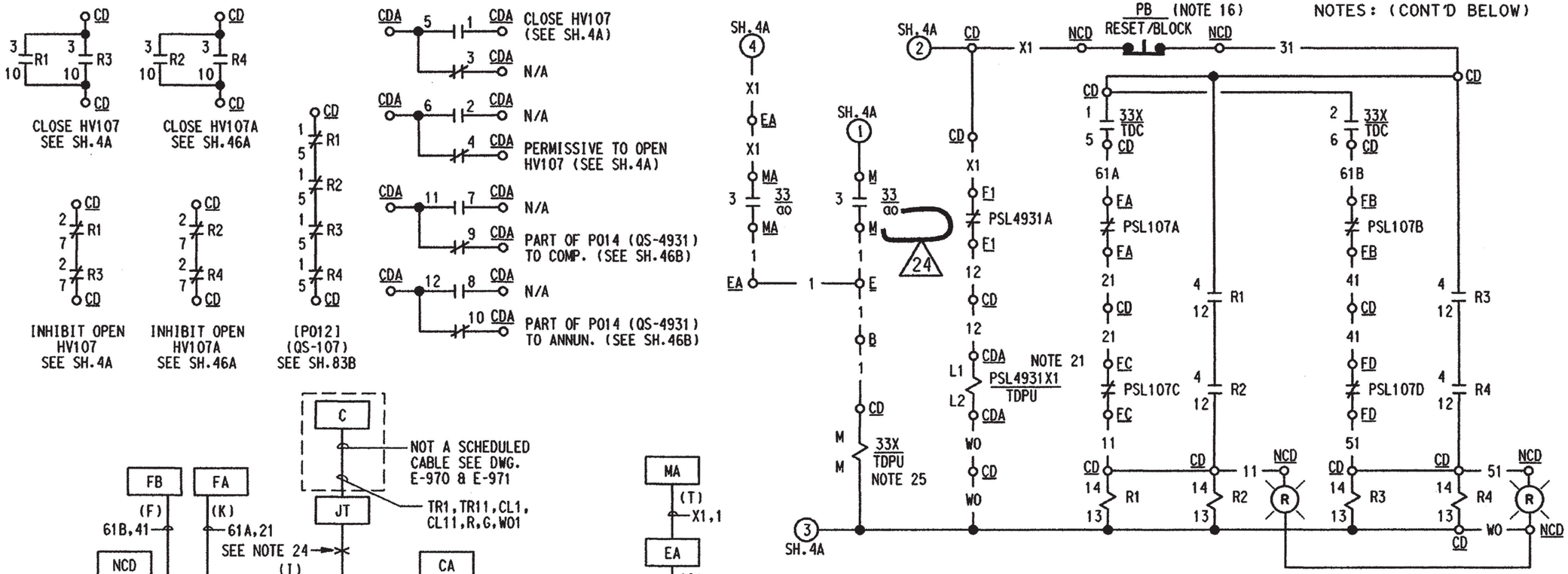

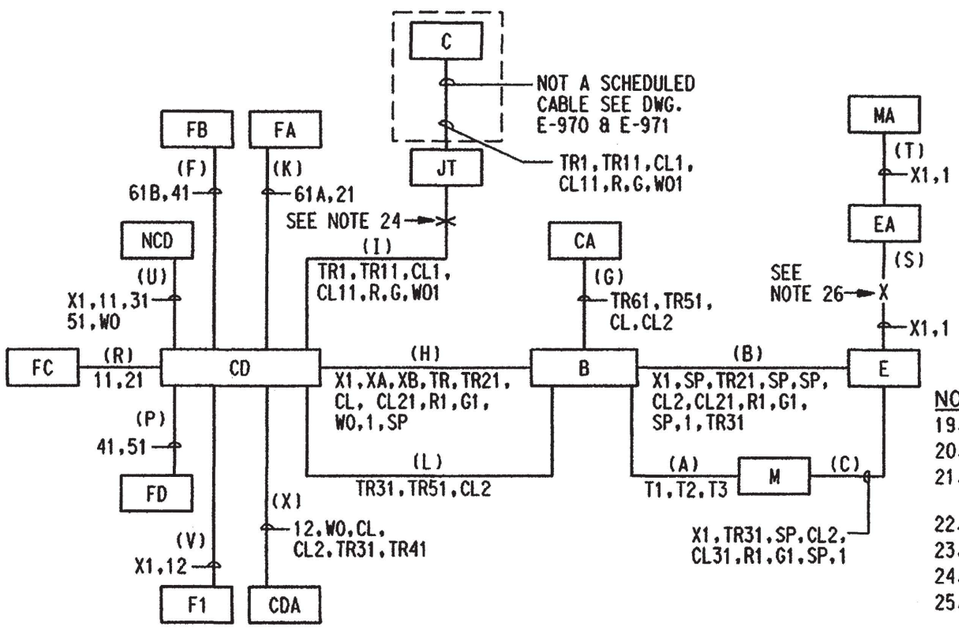

BLOCK DIAGRAM

NOTES: (CONT'D FROM ABOVE)

19. DELETED
20. DELETED
21. PSL4931X1/TDPU IS AN AGASTAT MODEL NO. E7014AD, RANGE 10-100 SEC. SET AT 60 SEC.
22. OVERLOAD HEATERS REPLACED BY SHORTING BARS.
23. DELETED
24. IN LINE TERMINATION LOCATED IN JB5776.
25. 33X/TDPU AGASTAT MODEL NO. E7012AD 5-50 SEC. SET AT 25 SEC.
26. X = INDICATES IN-LINE TERMINATION

THIS DRAWING WAS REDRAWN ON CADD AND SUPERSEDES REVISION 20

SCALE NONE	DESIGNED	DRAWN SBW	DATE 10-09-03

DAVIS-BESSE NUCLEAR POWER STATION
UNIT NO. 1

ELEMENTARY WIRING DIAGRAMS
STEAM & CONDENSATE
AUX FD PMPS TURBS MN STM IN ISO VLVS

DRAWING NO.	REV.
E-46B SH.4B	24

NO.	DATE	REVISIONS	INITIALS	INITIALS	CH'K	BY	GEN. SUPV.	ENGR. SUPV.	ENGR.
23	04-16-10	INC. DUN 09-0588-001-004 & 09-0588-003-004 BOTH REV.00	ON FILE	ON FILE					
22	2-18-05	INC. DCN E-46B-631 PER ECR 04-0431-00							
24	7/7/11	INC. DUN 11-0136-001-004 REV.00			SAG	SAG			

DB 07-06-11 DFN= F:/SCHEME/E46BS04B.DGN

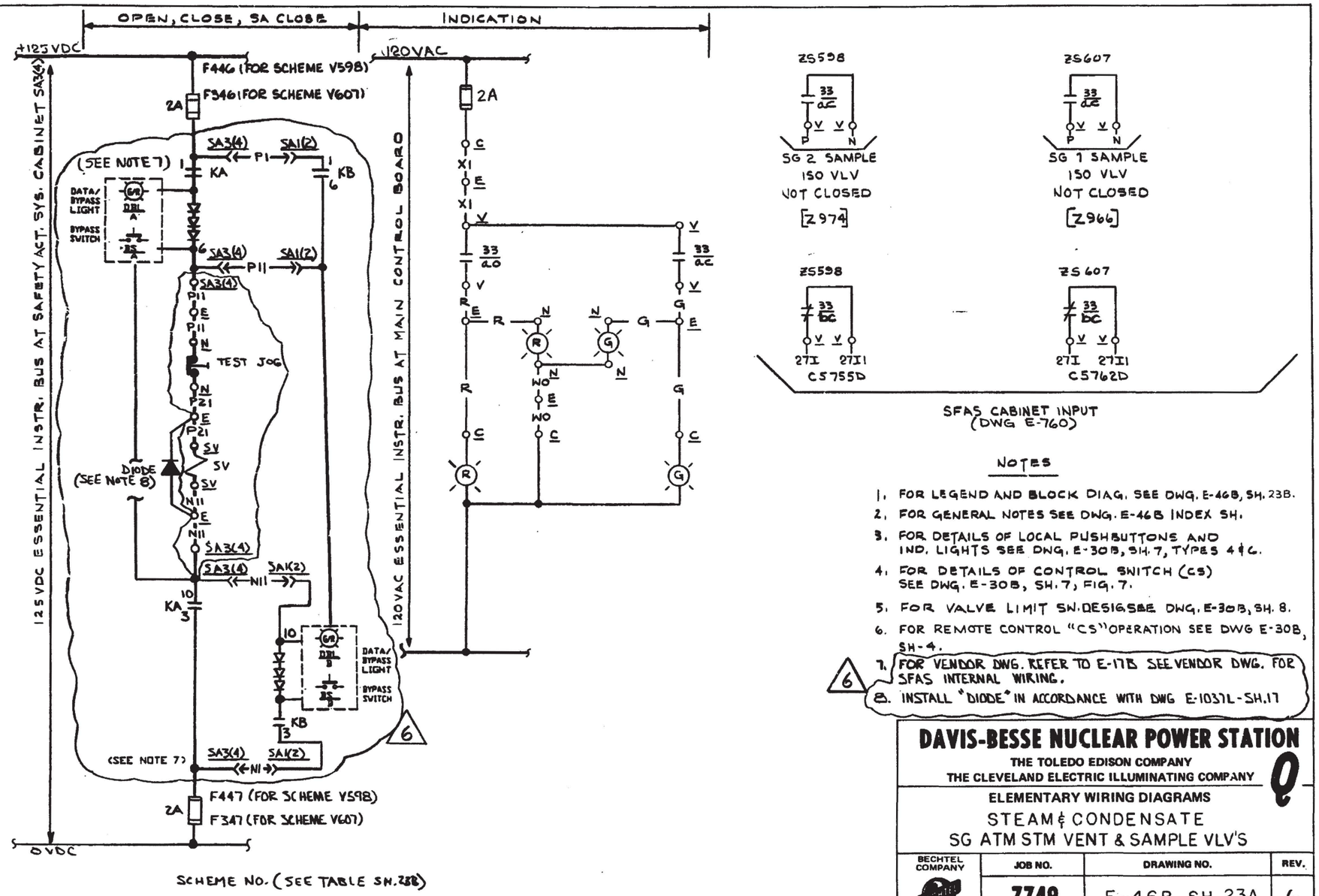

NOTES

1. FOR LEGEND AND BLOCK DIAG. SEE DWG. E-46B, SH. 23B.
2. FOR GENERAL NOTES SEE DWG. E-46B INDEX SH.
3. FOR DETAILS OF LOCAL PUSHBUTTONS AND IND. LIGHTS SEE DWG. E-30B, SH. 7, TYPES 4 & 6.
4. FOR DETAILS OF CONTROL SWITCH (CS) SEE DWG. E-30B, SH. 7, FIG. 7.
5. FOR VALVE LIMIT SW. DESIGS SEE DWG. E-30B, SH. 8.
6. FOR REMOTE CONTROL "CS" OPERATION SEE DWG E-30B, SH-4.
7. FOR VENDOR DWG. REFER TO E-17B SEE VENDOR DWG. FOR SFAS INTERNAL WIRING.
8. INSTALL "DIODE" IN ACCORDANCE WITH DWG E-1037L-SH.17

REV.	DESCRIPTION	DATE	DR	CHK	SUPV	CHIEF	PROJ	OWNER	OWNER
6	INC DCNS E-46B-4786 & 479 PER MOD 90-0006 SUP. 0; INC DCN'S E-46B-487 & 488 PER MOD 87-1014 SUP. 1	1/6/92	JBH	MWNS					
0	ISSUED FOR CONSTRUCTION								

DAVIS-BESSE NUCLEAR POWER STATION
THE TOLEDO EDISON COMPANY
THE CLEVELAND ELECTRIC ILLUMINATING COMPANY

ELEMENTARY WIRING DIAGRAMS
STEAM & CONDENSATE
SG ATM STM VENT & SAMPLE VLV'S

BECHTEL COMPANY	JOB NO.	DRAWING NO.	REV.
	7749	E-46B SH. 23A	6

G-231-D

LEGEND

SCHEME NO.	S.U. NO.	CHANNEL	WIRE PREFIX AT MAIN CONT. BD.	C.S.	EQUIPMENT										SA OUTPUT RELAYS		DESCRIPTION
					C	E	SV*		V	SA1	SA2	SA3	SA4	N	KA	KB	
V598	063	2	GBS	HIS598	C5717	EV1545	SV598		V598	—	C5755C	—	C5756D	NV598	K27 I	K27 I	SG2 SAMPLE ISO VLV
																	9
V607	063	1	GAS	HIS607	C5717	EV607	SV607		V607	C5762C	—	C5763D	—	NV607	K27 I	K27 I	SG1 SAMPLE ISO VLV

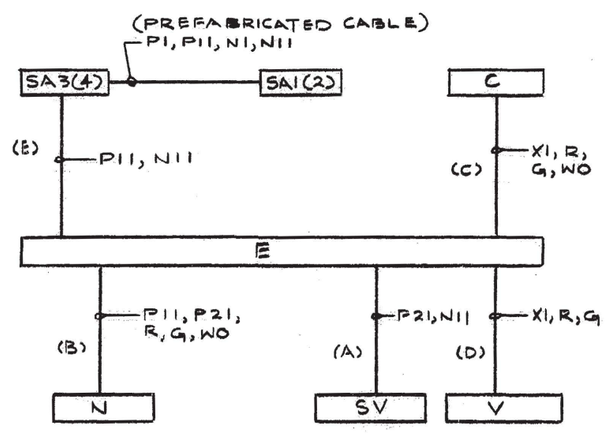

BLOCK DIAGRAM

REV.	DESCRIPTION	DATE	DR	CHK	SUPV	CHIEF	PROJ	OWNER	OWNER	OWNER
9	INC. DCN E-46B-630 PER ECR03-0308-00 CR03-0317/CA03-0[illegible]	2/19/85	JBH	MWKS	AGM					
0	ISSUED FOR CONSTRUCTION									

G-231-D

DAVIS-BESSE NUCLEAR POWER STATION

THE TOLEDO EDISON COMPANY
THE CLEVELAND ELECTRIC ILLUMINATING COMPANY

ELEMENTARY WIRING DIAGRAMS

STEAM & CONDENSATE
SG ATM STM VENT & SAMPLE VLV'S

BECHTEL COMPANY	JOB NO.	DRAWING NO.	REV.
	7749	E-46B SH. 23B	9

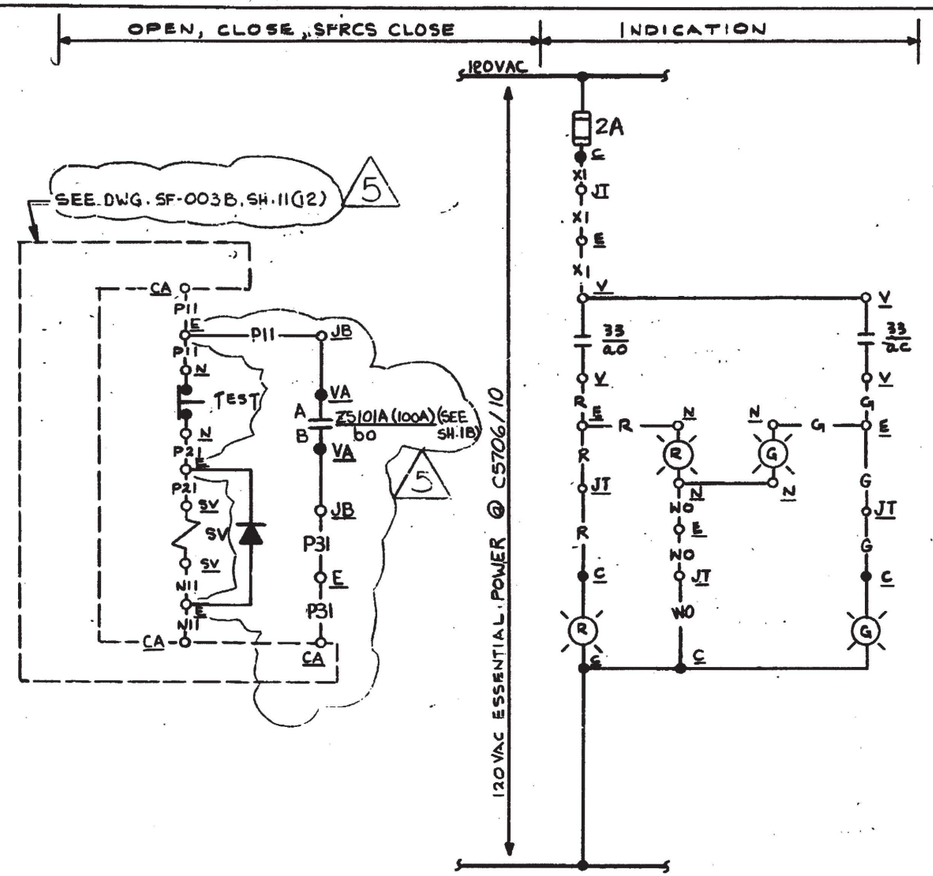

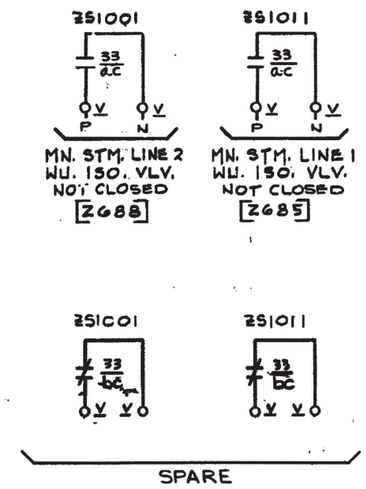

NOTES

1. FOR LEGEND & BLOCK DIAG. SEE DWG. E-46B, SH.32B.
2. FOR GENERAL NOTES SEE DWG. E-46B INDEX SH.
3. FOR DETAILS OF LOCAL PUSHBUTTON AND IND. LIGHTS SEE DWG. E-30B, SH.7, TYPES 4 & 6.
4. DELETED
5. FOR VALVE LIMIT SW. DESIG. SEE DWG. E-30B, SH.8.
6. FOR CONTROL POWER AND SFRCS LOGIC, DWG. SF-003B SH. 11 (12).
7. DELETED
8. IN LINE TERMINATION LOCATED IN JB 5777 (CH.1)

DAVIS-BESSE NUCLEAR POWER STATION

THE TOLEDO EDISON COMPANY
THE CLEVELAND ELECTRIC ILLUMINATING COMPANY

ELEMENTARY WIRING DIAGRAMS
STEAM & CONDENSATE
MN. STM. LINES WU. ISO. VLV'S.

BECHTEL COMPANY	JOB NO.	DRAWING NO.	REV.
	7749	E-46B SH. 32A	5

REV.	DESCRIPTION	DATE	DR	CHK	SUPV	CHIEF	PROJ	OWNER
5	"AS BUILT" FOR MOD 87-1107, SUP.2, INC. DCN E-46B-226 & 229, SUP.4, INC. DCN E-46B-307	9/10/91	GFB	CHK	MRS	CAV		
4	"AS BUILT" FCR 87-63, INC. DCN E-46B-171, 173, GENERAL UPDATE	10/21/88	GFB	JBH				
0	ISSUED FOR CONSTRUCTION	9/27/79						

G-231-D

REV.	DESCRIPTION	DATE	DR	CHK	SUPV	CHIEF	PROJ	OWNER	OWNER
6	AS BUILT FOR MOD 87-1107, SUP. 2, INC. DCN E-46B-230,270 GEN UPDATE	9/14/89	GFS		SJS				
5	AS BUILT FOR FOR 87-63, INC. DCN E-46B-172 & 174	10/21/86	GFS		HRS				
0	ISSUED FOR CONSTRUCTION		JBH						

G-231-D

LEGEND

SCHEME NO	S.U. NO.	CHANNEL	WIRE PREFIX AT MAIN CTRL. BD.	C.S.	EQUIPMENT											DESCRIPTION
					C	CA	JT	SV	N	V	JB	VA				
V1001	083	2	STD		C5708	C5792	JT5722	SV1001	NV1001	V1001	JT6704	HV100-1				MN. STM. LINE 2 WU. ISO. VLV.
V1011	083	1	STC		C5708	C5762A	JT5721	SV1011	NV1011	V1011	JT6802	HV101-1				MN. STM. LINE 1 WU. ISO. VLV.

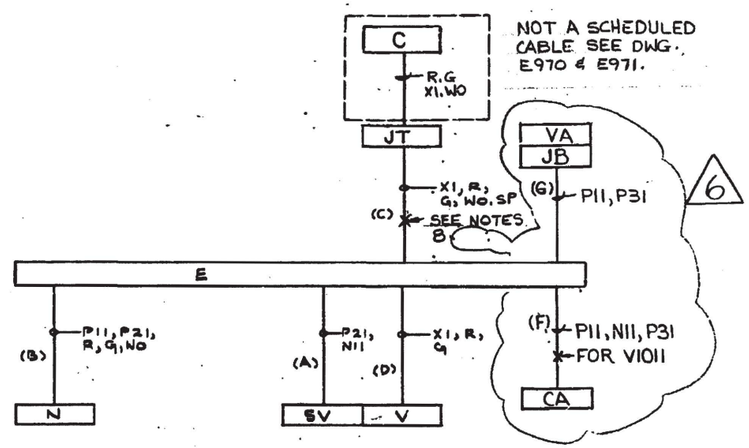

NOT A SCHEDULED CABLE SEE DWG. E970 & E971.

BLOCK DIAGRAM

NOTES:
1. FOR NOTES SEE SHEET 32A

DAVIS-BESSE NUCLEAR POWER STATION
THE TOLEDO EDISON COMPANY
THE CLEVELAND ELECTRIC ILLUMINATING COMPANY

ELEMENTARY WIRING DIAGRAMS
STEAM & CONDENSATE
MN. STM. LINES WU. ISO. VLV'S.

BECHTEL COMPANY	JOB NO.	DRAWING NO.	REV.
	7749	E-46 B SH.32 B	6

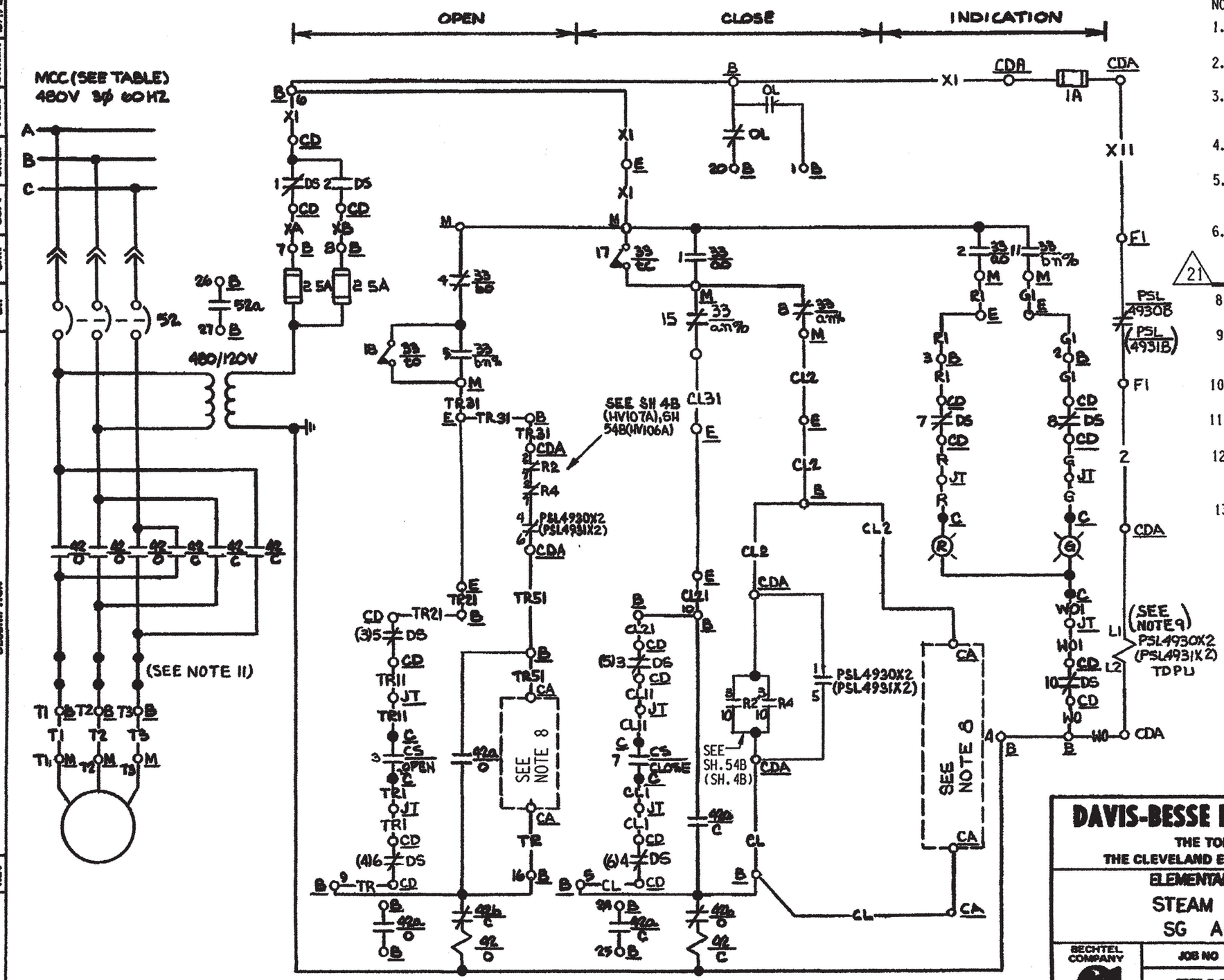

NOTES

1. FOR SCHEME & BLOCK DIAGRAM SEE DWG. E-46B, SH.46B.
2. FOR GENERAL NOTES SEE DWG. INDEX E-46B.
3. FIELD TO ADJUST ROTOR 4 SUCH THAT CONTACT 15 WILL PROVIDE SPECIFIED TARGET THRUST ON SEATING.
4. FOR DETAILS OF CS SEE DWG. E-30B, SH.7, FIG.7.
5. FOR VALVE LIMIT SW DEVELOPMENT SEE DWG. E-30B, SH.8G, FIG.M, (ALSO SEE NOTES 3, 6, & 12 THIS SHEET).
6. FIELD TO ADJUST ROTOR 3 SUCH THAT CONTACT 11 CLOSES WHEN VALVE IS CLOSED, (I.E. AFTER HARD SEAT CONTACT). 21
8. FOR SFRCS BLOCK SWITCH & SCHEMATIC SEE SF-003B, SH.15 (16).
9. PSL4930X2/TDPU (PSL4931X2/TDPU) IS AN AGASTAT MODEL NO. E7014AD, RANGE 10-100 SEC. SET AT 60 SEC.
10. PSL4930B (PSL4931B) CONTACT CLOSES ON LOW PRESS AT AFP SUCTION.
11. OVERLOAD HEATER REPLACED BY SHORTING BARS.
12. FIELD TO ADJUST ROTOR #2 WITH SWITCH CONTACTS 5 THRU 8 TO ACTUATE WHEN VALVE REACHES 20% OPEN (+5%,-0%).
13. X-INDICATES IN-LINE TERMINATION APPLIES TO SCHEME BE1271 ONLY.

THIS DWG. WAS REDRAWN/SCANNED ON CAD AND SUPERSEDES REV.19.

DAVIS-BESSE NUCLEAR POWER STATION

THE TOLEDO EDISON COMPANY
THE CLEVELAND ELECTRIC ILLUMINATING COMPANY

ELEMENTARY WIRING DIAGRAM

STEAM AND CONDENSATE
SG AFPT ISO VLV

BECHTEL COMPANY	JOB NO	DRAWING NO	REV
	7749	E46 B SH46A	21

REV	DESCRIPTION	DR	CHK	SUPV	CHIEF	PROJ	OWNER	DATE
21	INC. DUN'S 11-0787-001-001 & 12-0141-001-001 BOTH REV.00							5-6-12
20	INC. DUN 11-0136-001-001 REV.0 (REDRAWN)							7-7-11
0	ISSUED FOR CONSTRUCTION	INITIALS ON FILE						6-9-75

G 231 D

DB 04-17-12

DFN=F/SCHEME/E46BSH46A.DGN/TIF

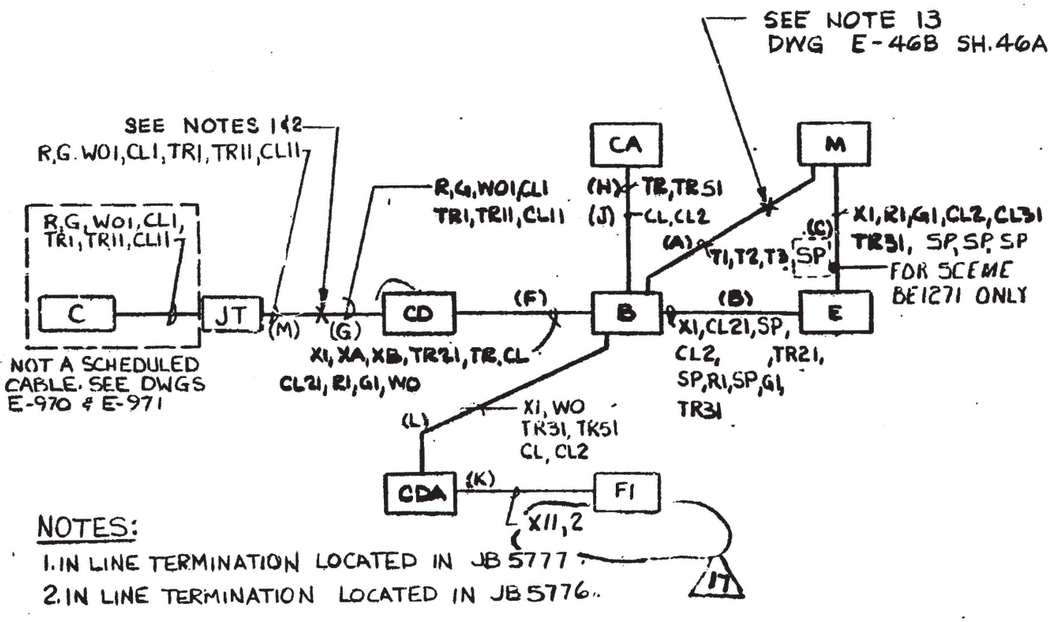

NOTES:

1. IN LINE TERMINATION LOCATED IN JB 5777
2. IN LINE TERMINATION LOCATED IN JB 5776.

BLOCK DIAGRAM

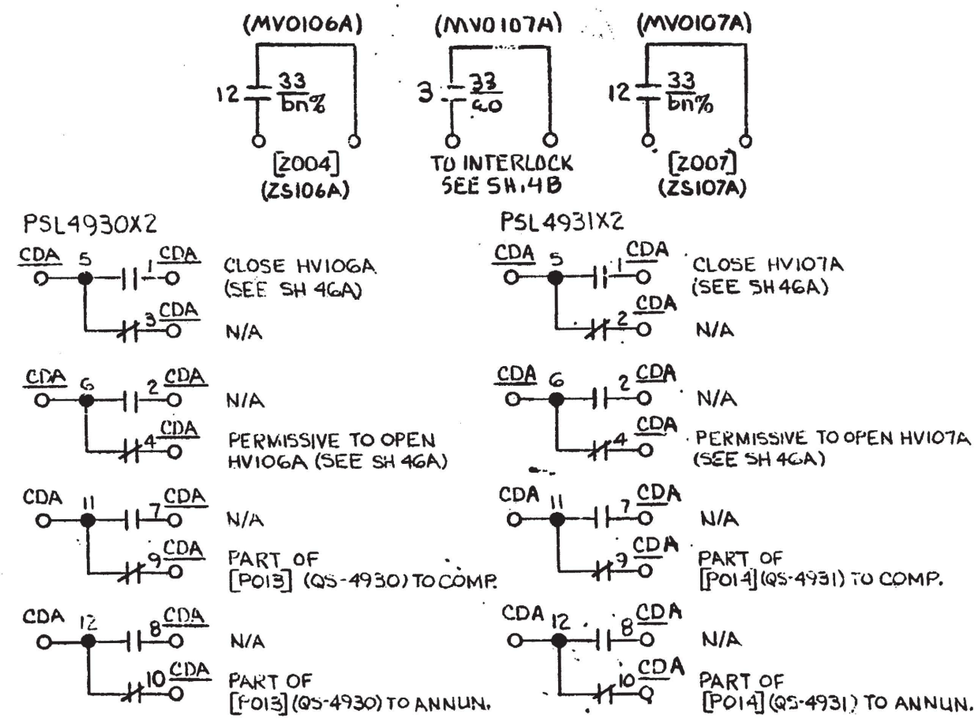

SCHEME NO	MCC	SU NO	CH	WIRE PREFIX	CS	EQUIPMENT NUMBERS													DESCRIPTION
						C	CD	CDA	B	M	E		CA	F1	JT				
BE1271	E12B	50A	1	STM	HIS106E	C5706	CDE12B	CDE11C	BE1271	MV0106A	EV0106A		C5762A	PSL4930E	JT5721				SG2 TO AFPT 1 ISO VLV
BF1188	F11B	50A	2	STN	HIS107E	C5709	CDF11B	CDF11A-2	BF1188	MV0107A	EV0107A		C5792	PSL4931B	JT5722				SG1 TO AFPT 2 ISO VLV

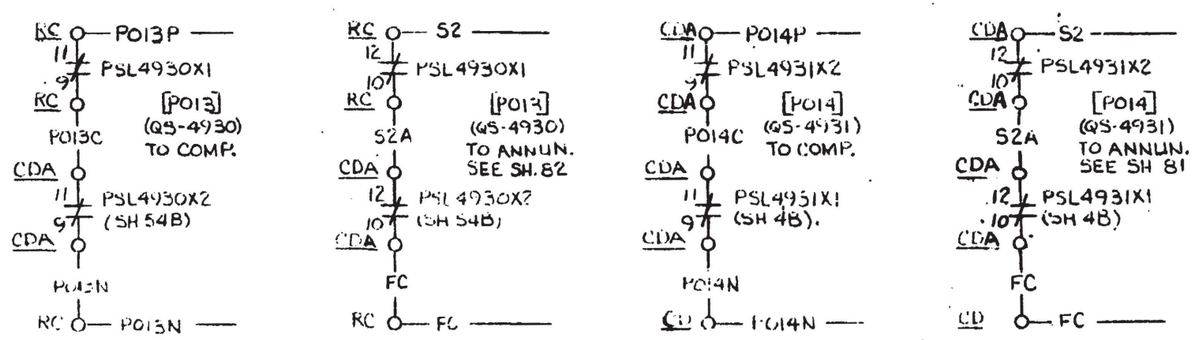

DAVIS-BESSE NUCLEAR POWER STATION

THE TOLEDO EDISON COMPANY
THE CLEVELAND ELECTRIC ILLUMINATING COMPANY

ELEMENTARY WIRING DIAGRAM

STEAM AND CONDENSATE
SG AFPT ISO VLV

BECHTEL COMPANY	JOB NO.	DRAWING NO.	REV.
	7749	E46B SH46B	17

REV.	DESCRIPTION	DR	CHK	SUPV	CHIEF	P IQI	OWNER	DATE
16	INC. NCNS E-46B-612 PER ECR 03-0026-004 E-46B-619 PER ECR 03-0026-00 R12 DCN E-46B-622 (SH. 48), 9 TO 3 FOR MV0107A CONTACT UPDATE PER ECR 03-0026-00 R12 DCN E-46B-622 (SH. 48), 9 TO 3 FOR MV0107A CONTACT	SBW	TOR	SBW	—	—	—	10-11-83
15	INC. NCNS E-46B-579 PER MOD 91-0043 SUPPOR PER N E-46B SH. 46 & SH. 48 PER ECR 03-0418-00 R.V. ADD "P" BATL ASSOC W/X11 (R) PERFORM REVIEW	SBW	TOR	SBW	—	—	—	10-4-83
17	ISSUED FOR CONSTRUCTION	RL	01/W.T.	SMS	WLAK	MS	—	6-9-75
0								

G-231-0

N15138

INDEX

SHEET NO.	LATEST REV.	DESCRIPTION	
1A	74 13	CIRCULATING WATER PUMP	
1B	15	CIRCULATING WATER PUMP	
1C	8	CIRCULATING WATER PUMP	
2A	6	CIRCULATING WATER PUMP DISCH. VLV'S	
2B	8	CIRCULATING WATER PUMP DISCH. VLV'S	
2C	10	CIRCULATING WATER PUMP DISCH. VLV'S	
3A	7	COOLING TOWER MAKE-UP PUMP	
3B	9	COOLING TOWER MAKE-UP PUMP	
4	9	COOLING TOWER MAKE-UP PUMP STRAINERS	
5	6	COOLING TOWER MAKE-UP PUMP BACK WASH VALVES	
6A	11	SERVICE WATER PUMP 1	Q
6B	13	SERVICE WATER PUMP 1 (AC 107)	Q
6C	5	SERVICE WATER PUMP 2	Q
6D	5	SERVICE WATER PUMP 2 (AD 107)	Q
7	15	SERVICE WATER PUMP STRAINERS 1-2	Q
7A	2	SERVICE WATER PUMP STRAINER 1-1	Q
7B	1	SERVICE WATER PUMP STRAINER 1-3	Q
8	13	SERVICE WATER PUMP STRAINERS 1-2 & 1-3 DRAIN VLV	Q
8A	1	SERVICE WATER PUMP STRAINER 1-1 DRAIN VLV	Q
9A	14	SW ISO VLV'S TO CLNG WTR (MOV'S) 1395	Q
9B	9	SW ISO VLV'S TO CLNG WTR (MOV'S) 1399	Q
10	1	DELETED	
11A	14	SERVICE WATER PUMP 3 CH.1	Q
11B	16	SERVICE WATER PUMP 3 (AC 109)	Q
11C	11	SERVICE WATER PUMP 3 XFER BRKR	Q
11D	6	SERVICE WATER PUMP 3 XFER BRKR	Q
11E	5	SERVICE WATER PUMP 3 CH.2	Q
11F	4	SERVICE WATER PUMP 3 (AD 109)	Q
12	6	CTMT AIR CLR'S 1-2 IN ISO VLV (MOV)	Q
12A	74 1	CTMT AIR CLR'S 1-1 IN ISO VLV (MOV)	Q
13	8	CTMT AIR CLR'S 1-1 & 1-2 OUTLET VLV'S (SOV'S)	Q
14A	8	CTMT AIR CLR'S 1-3 IN ISO VLV (MOV)	Q
14B	6	CTMT AIR CLR'S 1-3 IN ISO VLV (MOV)	Q
14C	7	CTMT AIR CLR'S 1-3 IN ISO VLV (MOV)	Q
15	12	ECCS RM CLR'S OUT VLV'S (MOV'S) DWG. VOID	Q
16	1	DELETED	

FOR CONTINUATION OF INDEX SEE SH.2.

GENERAL NOTES:

1. FOR EXPLANATION OF EQUIPMENT, WIRING AND SCHEME NUMBERS SEE E-11A, ELECTRICAL NUMBERING SYSTEMS.
2. FOR MOTOR INFORMATION SEE E-12B, ELECTRICAL MOTOR LIST.
3. FOR CONTROL PANEL, JUNCTION BOX & TERMINAL BOX DESCRIPTION SEE E-13B, ELECTRICAL EQUIPMENT LIST.
4. WIRE NUMBER PREFIX MUST BE ADDED TO FORM COMPLETE WIRE NUMBER FOR THOSE WIRES AT MAIN CONTROL BOARD.
5. AUX. CONTROL RELAY IN SOLENOID OPERATED VALVE CONTROL CIRCUIT TO BE COUCH RELAY TYPE 4AP44-AF.
6. NUMBERS IN BRACKETS [ ] REPRESENTS COMPUTER INPUT NUMBER. NUMBER IN PARENTHESIS ( ) REPRESENTS COMPUTER INPUT SOURCE NUMBER.

BLOCK DIAGRAM DESIGNATIONS:

A - 4.16 KV SYSTEM SWITCHGEAR
B - 480V SYSTEM MOTOR CONTROL CENTER
C - MAIN CONTROL BOARD
CA - LOCAL CONTROL CABINET
E - LOCAL DISTRIBUTION TERMINAL BOX
H - 13.8 KV SYSTEM SWITCHGEAR
M - MOTOR
N - LOCAL CONTROL STATION
P - PENETRATION TERMINAL BOX
RC - AUXILIARY RELAY CABINET

REFERENCE DRAWINGS:

E-5 SH.1 THRU 5 - 480V MCC (NON-ESSENTIAL) ONE LINE DIAGRAM
E-6 SH.1 & 2 - 480V MCC (ESSENTIAL) ONE LINE DIAGRAM
E-10A - STANDARD NOTES AND SYMBOLS
E-14B - SOLENOID VALVE LIST
E-30B - GENERAL GUIDES - ELEMENTARY DIAGRAM

THIS DRAWING WAS REDRAWN ON CADD AND SUPERSEDES REVISION 64.

SCALE NONE	DESIGNED	DRAWN EAL	DATE 04-13-04

DAVIS-BESSE NUCLEAR POWER STATION
UNIT NO. 1
THE TOLEDO EDISON COMPANY

ELEMENTARY WIRING DIAGRAMS
LAKE WATER SYSTEM
DRAWING INDEX

Q

DRAWING NO.	REV.
E-48B SH.1	74

INDEX

SHEET NO.	LATEST REV.	DESCRIPTION	
17	5	CLNG TWR MU PUMP DISCH VLV (SOV)	
18	7	CLNG TWR BLOWDOWN (SOV)	
19	6	LP COND 1-2 IN WTR BOXES X-OVER LINE VLV (MOV)	
20	9	SCREEN WASH PUMPS	
21	5	SCREEN WASH PUMPS STRAINERS	
22	6	SCRN WASH STRNR'S BKWSH VLV'S	
23	5	TRASH TROUGH WATER SUPPLY LINE	
24	3	TRVLG SCRN'S IN VLV'S	
25A	5	SUMP PUMPS	
25B	5	SUMP PUMPS	
26	11	SW TO INTAKE FOREBAY VLV (MOV'S)	Q
27	10	CTRL RM EMER COND UNITS OUT VLV'S (MOV'S)	Q
28	13	SW TO COLLECTION BASIN VLV (MOV)	Q
28A	0	SW TO INTAKE STRUCTURE VLV (MOV)	Q
28B	0	SW TO CLNG. TWR. MU VLV (MOV)	Q
29	7	CLNG WTR HX IN FRM CIRC WTR VLV (SOV)	
30	11	SW FRM CC HX'S 1 & 2 ISO VLV'S (SOV'S)	Q
31A	13	SW FRM CC HX 3 ISO VLV (SOV)	Q
31B	11	SW FRM CC HX 3 ISO VLV (SOV)	Q
31C	1	DELETED	
32	5	SERVICE WATER PUMPS DISH VLV'S (SOV'S)	
33A	7	CTMT AIR CLR 1-3 OUT VLV	Q
33B	4	CTMT AIR CLR 1-3 OUT VLV	Q
33C	6	CTMT AIR CLR 1-3 OUT VLV	Q
34	△74 7	TRAVELING WATER SCREENS	
35	4	INTAKE CRIB AIR BUBBLER COMPRESSORS	
36	7	FD TO MCC EF12C	Q
37A	6	DILUTION PUMP MOTOR	
37B	4	DILUTION PUMP MOTOR	
37C	0	BACK UP SERVICE WTR PUMP MOTOR	
37D	3	BACK UP SERVICE WTR PUMP MOTOR	
38	7	CLNG TWR LINES IN, BYPASS & DEICING VLV'S	
39	4	CLNG TWR ACID FD PMP'S DISCH VLV (MOV)	
40	1	DELETED	
41	4	CLNG TWR ACID SOLUTION EJECTION	
42A	5	CLNG TWR ACID INJ SYS AUX RELAYS	
42B	3	CLNG TWR ACID INJ SYS IND LIGHTS	
43	1	COMPUTER INPUT AUX CRKT'S	

INDEX

SHEET NO.	LATEST REV.	DESCRIPTION	
44	7	CTMT H2 PURGE FAN SW IN VLV'S	Q
45	4	CLNG TWR ACID TK'S ACID CTRL VLV (SOV'S)	
46A	5	ALARMS	
46B	7	ALARMS	
46C	1	TRAVELING WATER SCREEN △P REFLASH	
46D	1	TRAVELING WATER SCREEN TROUBLE ANNUNCIATION REFLASH	
47	2	CLNG TWR ACID TIMING CONTROL	
48A	4	UNIT SETTLING BASIN SUMP PUMPS	
48B	4	UNIT SETTLING BASIN SUMP PUMPS	
49	0	DWG. VOID	
50	6	BACK UP SERVICE WATER STRAINERS	
51	5	BACK UP SERVICE WATER STRNR'S DRN.	

FOR GENERAL NOTES AND REFERENCE DRAWINGS SEE DRAWING E-48B DRAWING INDEX SH.1.

FOR REVISION DESCRIPTION SEE INDEX SH.3.

THIS DRAWING WAS REDRAWN ON CADD AND SUPERSEDES REVISION 64.

SCALE NONE	DESIGNED	DRAWN EAL	DATE 04-13-04

DAVIS-BESSE NUCLEAR POWER STATION
UNIT NO. 1
THE TOLEDO EDISON COMPANY

ELEMENTARY WIRING DIAGRAMS
LAKE WATER SYSTEM
DRAWING INDEX

Q

DRAWING NO.	REV.
E-48B SH.2	74

REV	DATE	DESCRIPTION	BY	CH'K	ENGR.	ENGR. SUPV.	GEN. SUPV.
74	05/12/16	REVISED SH.1A (REV.13), SH.12A (REV.1) & SH.34 (REV.7)	SAP	GBW	—	SML	—
73	02/08/14	REVISED SH.13 (REV. 8), SH.33A (REV.7), SH. 33C, 34 & 37A (REV. 6), & SH. 37D (REV. 3).		INITIALS ON FILE			
72	08/15/13	REVISED SH.7 (REV.15), SH.7B (REV.1), SH.11C (REV.11), SH.37D (REV.2), SH.50 (REV.6) & SH.51 (REV.5) & GEN. UPDATE ADD SH.7B TO INDEX & CORRECT SH.7A (IND. SH.1) REMOVE 1-3, NOW ON NEW SH.7B BOTH PER REVIEW OF ASSOC. DWG. & FILENET		INITIALS ON FILE			
71	8/14/12	REVISED SH.7 (REV.14), SH.7A (REV.2), SH.31A (REV.13), SH.33A (REV.6), SH.33B (REV.4) & SH.50 (REV.5)		INITIALS ON FILE			
70	7/14/09	REVISED SH.7A & 8A (REV.1), SH.36 (REV.7) & SH.50 & 51 (REV.4)		INITIALS ON FILE			
69	02/29/08	REVISED SH. 11C (REV.10), & SH. 19 (REV.6)		INITIALS ON FILE			
68	05/22/06	REVISED SH. 38 (REV.7)		INITIALS ON FILE			
67	02/20/06	REVISED SH'S. 13 (REV.7), 30 (REV.11), 33A (REV.5)& 33B (REV.3)		INITIALS ON FILE			
66	09/15/05	REVISED SH'S. 1A & 31A (REV.12), SH.1B (REV.15), SH.1C (REV.8), SH.2C & 30 (REV.10), SH.9A (REV.14), SH.9B (REV.9) & SH.13 (REV.6)		INITIALS ON FILE			
65	10/5/04	REVISED SH'S. 7, 8, 9A & 28 (REV.13); SH'S. 12, 14B, 36 (REV.6); SH'S. 9B & 14A (REV.8); SH'S. 14C, 18 & 46B (REV.7); SH. 35 (REV.4); SH'S. 50 & 51 (REV.3), AND GEN. UPDATE ADDED SHT'S. 7A, 8A, 12A (REV.0) TO INDEX PER DWG. SPLIT FOR DCN UPDATE AND REVISED DWG. TITLE FOR SH'S. 7, 8, 9A, 9B, 12 & 28.		INITIALS ON FILE			

FOR GENERAL NOTES AND REFERENCE DRAWINGS SEE DRAWING E-48B DRAWING INDEX SH.1.

THIS DRAWING WAS REDRAWN ON CADD AND SUPERSEDES REVISION 64.

SCALE NONE	DESIGNED	DRAWN EAL	DATE 04-13-04

DAVIS-BESSE NUCLEAR POWER STATION
UNIT NO. 1
THE TOLEDO EDISON COMPANY

ELEMENTARY WIRING DIAGRAMS
LAKE WATER SYSTEM
DRAWING INDEX

Q

DRAWING NO.	REV.
E-48B SH.3	74

DB 05-06-16 DFN:/F/SCHEME/E48BIS01.DGN

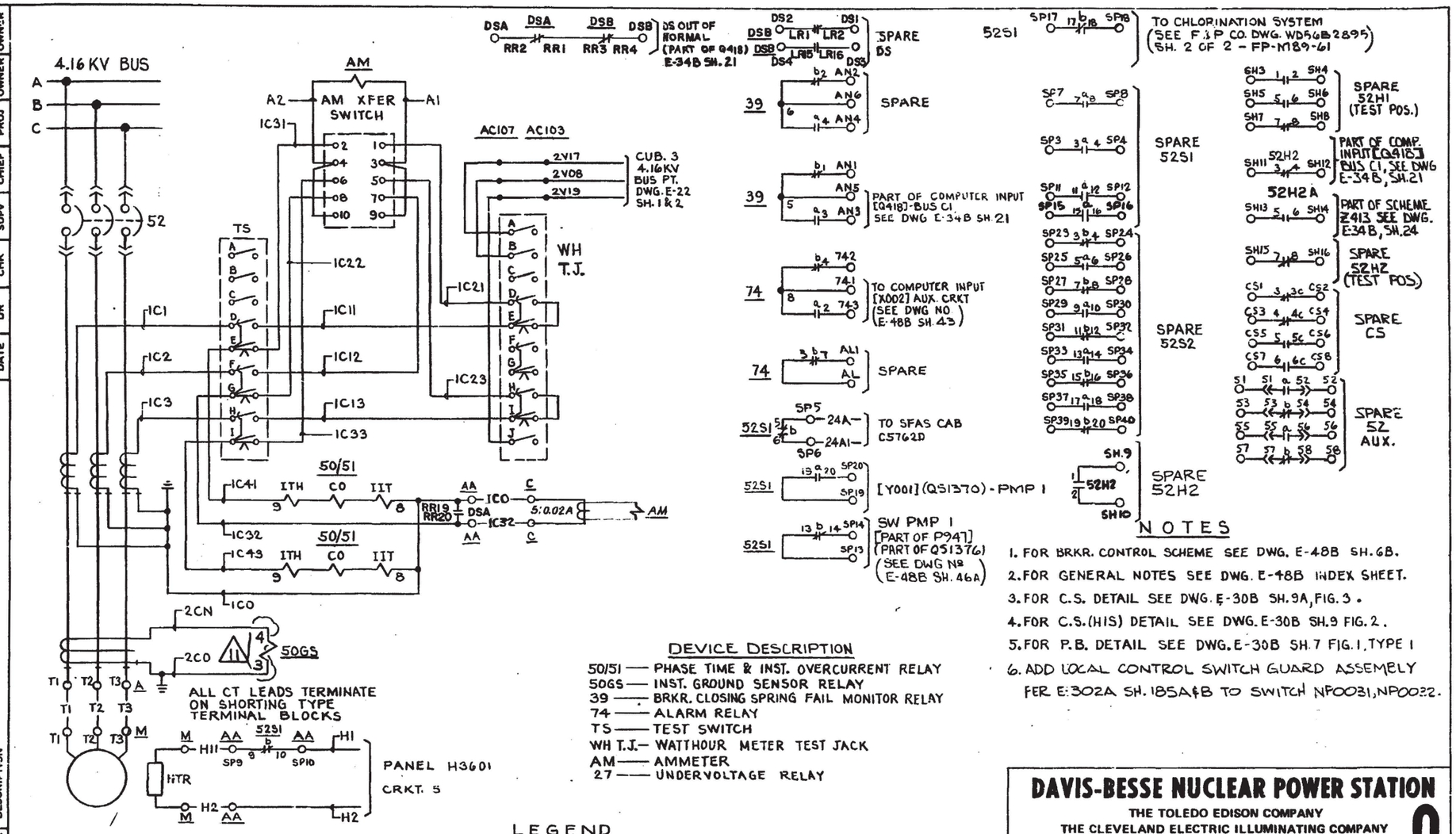

NOTES

1. FOR BRKR. CONTROL SCHEME SEE DWG. E-48B SH. 6B.
2. FOR GENERAL NOTES SEE DWG. E-48B INDEX SHEET.
3. FOR C.S. DETAIL SEE DWG. E-30B SH. 9A, FIG. 3.
4. FOR C.S. (HIS) DETAIL SEE DWG. E-30B SH. 9 FIG. 2.
5. FOR P.B. DETAIL SEE DWG. E-30B SH. 7 FIG. 1, TYPE 1
6. ADD LOCAL CONTROL SWITCH GUARD ASSEMBLY PER E-302A SH. 185A&B TO SWITCH NP0031, NP0032.

DEVICE DESCRIPTION

50/51 — PHASE TIME & INST. OVERCURRENT RELAY
50GS — INST. GROUND SENSOR RELAY
39 — BRKR. CLOSING SPRING FAIL MONITOR RELAY
74 — ALARM RELAY
TS — TEST SWITCH
WH T.J. — WATTHOUR METER TEST JACK
AM — AMMETER
27 — UNDERVOLTAGE RELAY

LEGEND

SCHEME NO.	S.U. NO.	CH.	WIRE PREFIX AT MAIN CTRL. BD.	CS (HIS)	AM (AT C)	BUS	SWGR. UNIT	EQUIPMENT C	AA	AB	M	N	SA1		SA3		SA OUTPUT RELAY KA	KB
AC107	11	1	SWA	H151370	111370	C1	7	C5716	AC107	AC109	MP0031	NP0031	C5762D		C5763C		K24A	K24A

REV.	DESCRIPTION	DATE	DR	CHK	SUPV	CHIEF	PROJ	OWNER	OWNER
11	INC. DCN E-48B-285 PER MOD 95-0021 SUP. 0	9-11-96	SBW	JTR					
10	INC DCN E-48B-147 PER FCR 84-0177 AND DCN E-48B-206 PER MOD 88-0081 SUP 00	3/1/91							
0	ISSUED FOR CONSTRUCTION	1/8/79							

G-231-0

DAVIS-BESSE NUCLEAR POWER STATION

THE TOLEDO EDISON COMPANY
THE CLEVELAND ELECTRIC ILLUMINATING COMPANY

ELEMENTARY WIRING DIAGRAMS

LAKE WATER SYSTEM
SERVICE WATER PUMP 1

BECHTEL COMPANY	JOB NO.	DRAWING NO.	REV.
	7749	E-48B SH. 6A	11

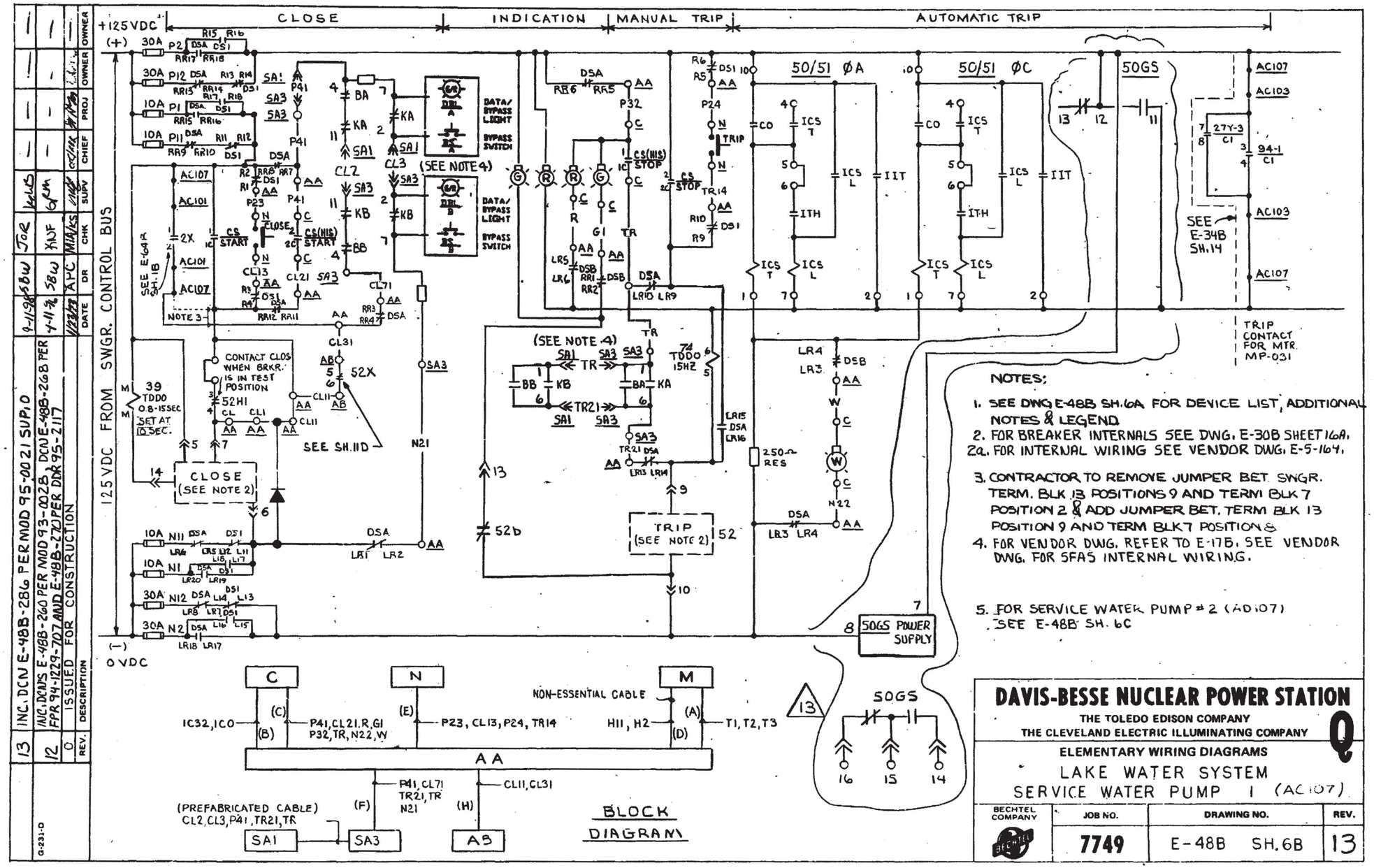

NOTES;

1. SEE DWG E-48B SH.6A FOR DEVICE LIST, ADDITIONAL NOTES & LEGEND.
2. FOR BREAKER INTERNALS SEE DWG. E-30B SHEET 16A.
2a. FOR INTERNAL WIRING SEE VENDOR DWG. E-5-164.
3. CONTRACTOR TO REMOVE JUMPER BET. SWGR. TERM. BLK 13 POSITIONS 9 AND TERM BLK 7 POSITION 2 & ADD JUMPER BET. TERM BLK 13 POSITION 9 AND TERM BLK 7 POSITION 8.
4. FOR VENDOR DWG. REFER TO E-17B. SEE VENDOR DWG. FOR SFA5 INTERNAL WIRING.
5. FOR SERVICE WATER PUMP #2 (AD107) SEE E-48B SH. 6C

REV.	DESCRIPTION	DATE	DR	CHK	SUPV	CHIEF	PROJ	OWNER	OWNER
13	INC. DCN E-48B-286 PER MOD 95-0021 SUP. 0	9-11-98	SBW	SBW	MAK	JOR	KMJ		
12	INC. DCNS E-48B-260 PER MOD 93-0028, DCN E-48B-268 PER FPR 94-1229-707 AND E-48B-270 PER DDR 95-2117	7-11-96	SBW	APC	MAK	JOR	KMJ		
0	ISSUED FOR CONSTRUCTION								

DAVIS-BESSE NUCLEAR POWER STATION

THE TOLEDO EDISON COMPANY
THE CLEVELAND ELECTRIC ILLUMINATING COMPANY

ELEMENTARY WIRING DIAGRAMS

LAKE WATER SYSTEM
SERVICE WATER PUMP 1 (AC107)

BECHTEL COMPANY	JOB NO.	DRAWING NO.	REV.
	7749	E-48B SH.6B	13

NEWFAX 3/85 N58313 ED 7489

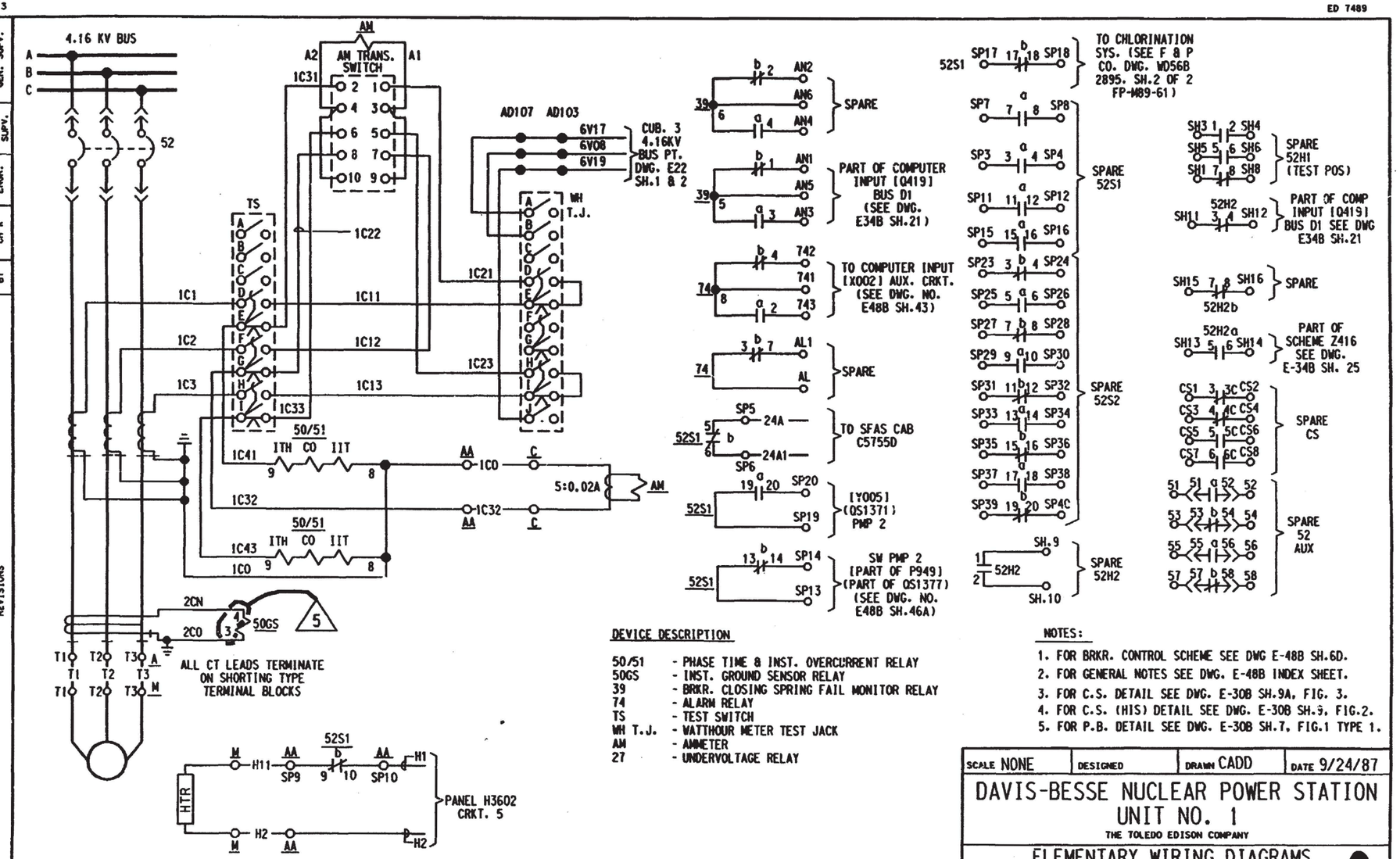

DEVICE DESCRIPTION

50/51	- PHASE TIME & INST. OVERCURRENT RELAY
50GS	- INST. GROUND SENSOR RELAY
39	- BRKR. CLOSING SPRING FAIL MONITOR RELAY
74	- ALARM RELAY
TS	- TEST SWITCH
WH T.J.	- WATTHOUR METER TEST JACK
AM	- AMMETER
27	- UNDERVOLTAGE RELAY

NOTES:

1. FOR BRKR. CONTROL SCHEME SEE DWG E-48B SH.6D.
2. FOR GENERAL NOTES SEE DWG. E-48B INDEX SHEET.
3. FOR C.S. DETAIL SEE DWG. E-30B SH.9A, FIG. 3.
4. FOR C.S. (HIS) DETAIL SEE DWG. E-30B SH.9, FIG.2.
5. FOR P.B. DETAIL SEE DWG. E-30B SH.7, FIG.1 TYPE 1.

LEGEND

SCHEME NO.	S.U. NO.	CHANNEL	WIRE PREFIX AT MAIN CONT. BD.	CS (HIS)	AM (ATC)	BUS	SWGR UNIT	EQUIPMENT C	AA	AB	M	N	SA2	SA4	SA OUTPUT RELAY KA	KB
AD107	11	2	SWB	HIS1371	I11371	D1	7	C5716	AD107	AD109	MP0032	NP0032	C5755D	C5756C	K24A	K24A

NO.	DATE	REVISIONS	BY	CH'K	ENGR.	ENGR. SUPV.	GEN. SUPV.
3	5/8/90	INC. DCN: E-48B-145 FOR FCR 84-0177; E-48B-193 FOR MOD 88-0081, SUP. 0	JOR	"INITIALS ON FILE"	JLH MTF	JJS WJK BKZ	JAC PWG
5	8-21-90	INC. DCN E-48B-287 PER MOD 95-0021 SUPP.0					
4	3-1-91	INC DCN E-48B-204 FOR MOD 88-0081 SUPP.0					
0	12/1/87	CREATED TO REFLECT SCHEME SEPARATION DUE TO AS BUILT OF FCR 84-186					

SCALE NONE | DESIGNED | DRAWN CADD | DATE 9/24/87

DAVIS-BESSE NUCLEAR POWER STATION
UNIT NO. 1
THE TOLEDO EDISON COMPANY

ELEMENTARY WIRING DIAGRAMS
LAKE WATER SYSTEM
SERVICE WATER PUMP 2

Q

DRAWING NO. E48B SH.6C | REV. 5

DFN=F:/SCHEME/E48BSH6C.DGN DB 08-07-00

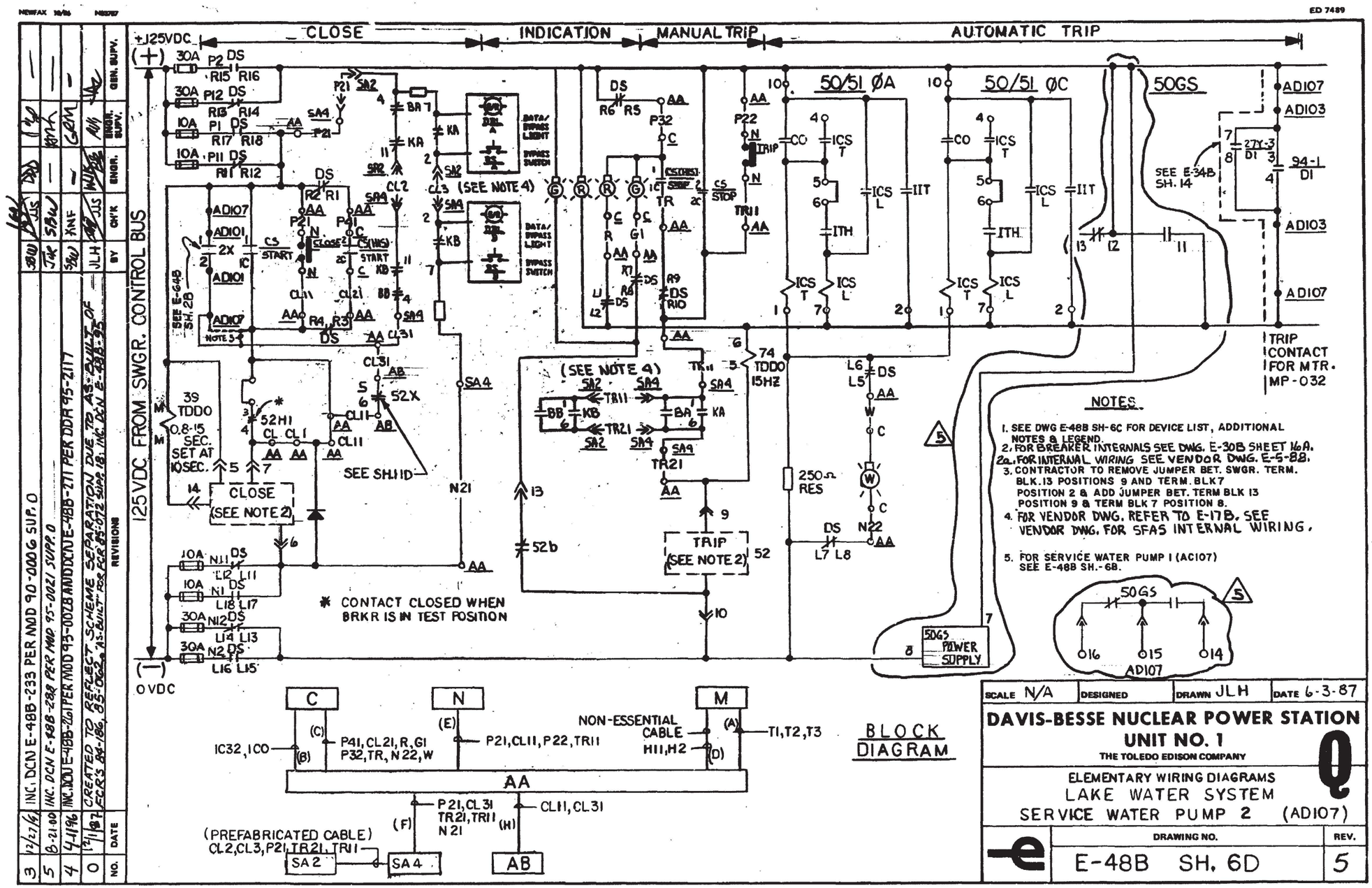

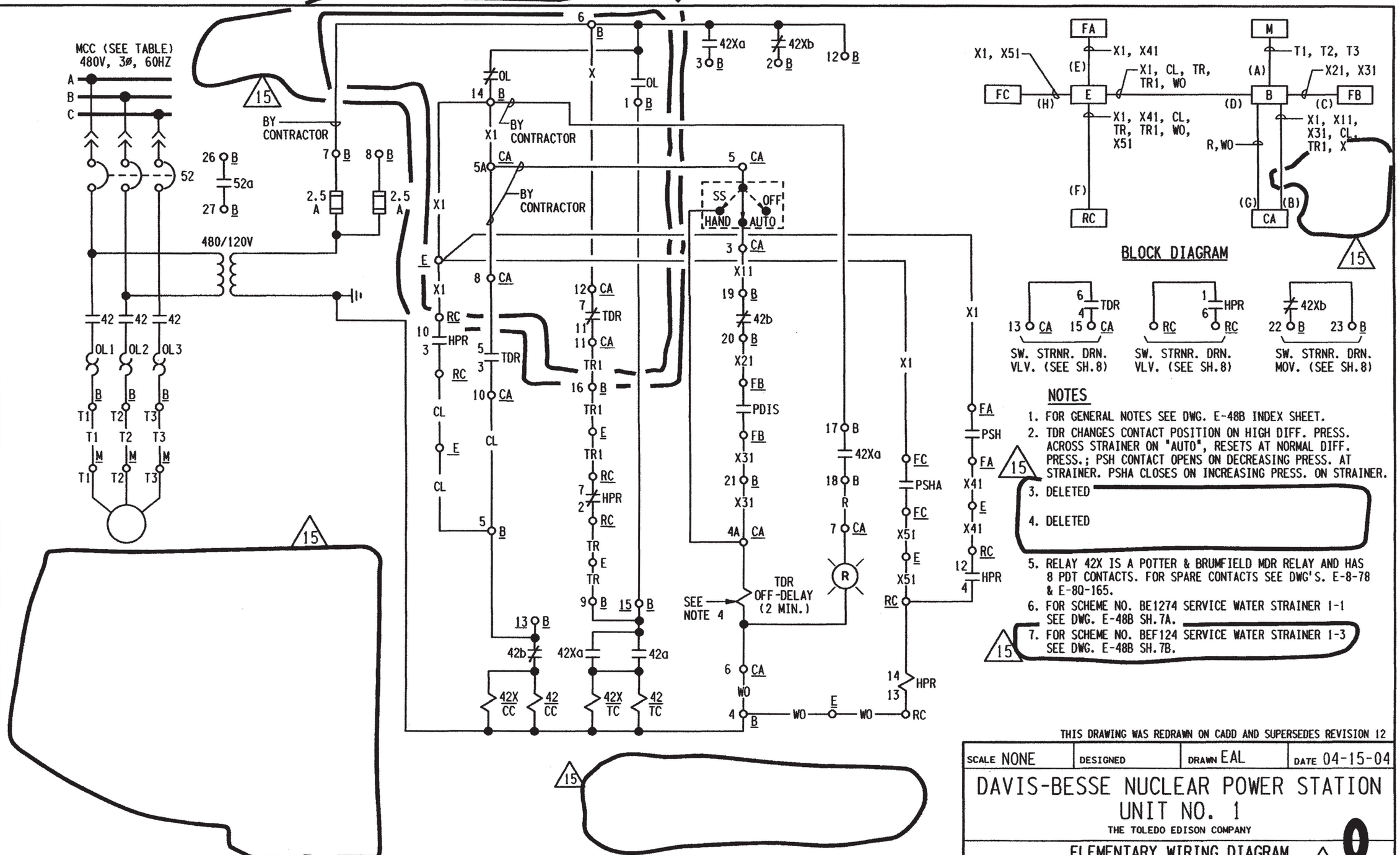

NOTES

1. FOR GENERAL NOTES SEE DWG. E-48B INDEX SHEET.
2. TDR CHANGES CONTACT POSITION ON HIGH DIFF. PRESS. ACROSS STRAINER ON "AUTO", RESETS AT NORMAL DIFF. PRESS.; PSH CONTACT OPENS ON DECREASING PRESS. AT STRAINER. PSHA CLOSES ON INCREASING PRESS. ON STRAINER.
3. DELETED
4. DELETED
5. RELAY 42X IS A POTTER & BRUMFIELD MDR RELAY AND HAS 8 PDT CONTACTS. FOR SPARE CONTACTS SEE DWG'S. E-8-78 & E-8Q-165.
6. FOR SCHEME NO. BE1274 SERVICE WATER STRAINER 1-1 SEE DWG. E-48B SH.7A.
7. FOR SCHEME NO. BEF124 SERVICE WATER STRAINER 1-3 SEE DWG. E-48B SH.7B.

SCHEME NO.	MCC	S.U. NO.	CHANNEL NO.	EQUIPMENT								DESCRIPTION
				B	M	CA	E	FA	FB	FC	RC	
BF1274	F12C	11	2	BF1274	MF0152	C3018	EV13800	FPSH2918	FPDIS1380A	FPSH2918A	RC3014	SW STRAINER 1-2

THIS DRAWING WAS REDRAWN ON CADD AND SUPERSEDES REVISION 12

SCALE NONE	DESIGNED	DRAWN EAL	DATE 04-15-04

DAVIS-BESSE NUCLEAR POWER STATION
UNIT NO. 1
THE TOLEDO EDISON COMPANY

ELEMENTARY WIRING DIAGRAM
LAKE WATER SYSTEM
SERVICE WATER PUMP STRAINERS 1-2

DRAWING NO.	REV.
E-48B SH.7	15

NO.	DATE	REVISIONS	BY	CH'K	ENGR.	ENGR. SUPV.	GEN. SUPV.
15	8/15/13	INC. DUN 10-0192-003-005 REV.00 & GEN. UPDATE DWG. TITLE PER DUN UPDATE (1-3 ON NEW SH.7B) & REMOVE ALL EXCEPTION INFO. DWG NOW FOR BF1274 ONLY (STRAINER 1-2)	SBW	SJC	—	—	—
14	8/14/12	INC. DUN 10-0192-002-001 REV.01 & GEN. UPDATE ADD DETAIL 1, INFORM. NOTE & OTHER INFO. AS REQ'D TO SHOW CHANGE IS FOR BF1274 ONLY (STRAINER 1-2)(G.U REQ'D FOR USAR UPDATE DEC. 2012, UCN 10-078) PHANTOM BOX NOT CLOUDED FOR CLARITY					

INITIALS ON FILE

DB 06-25-13 DFN= F:/SCHEME/E48BS7.DGN

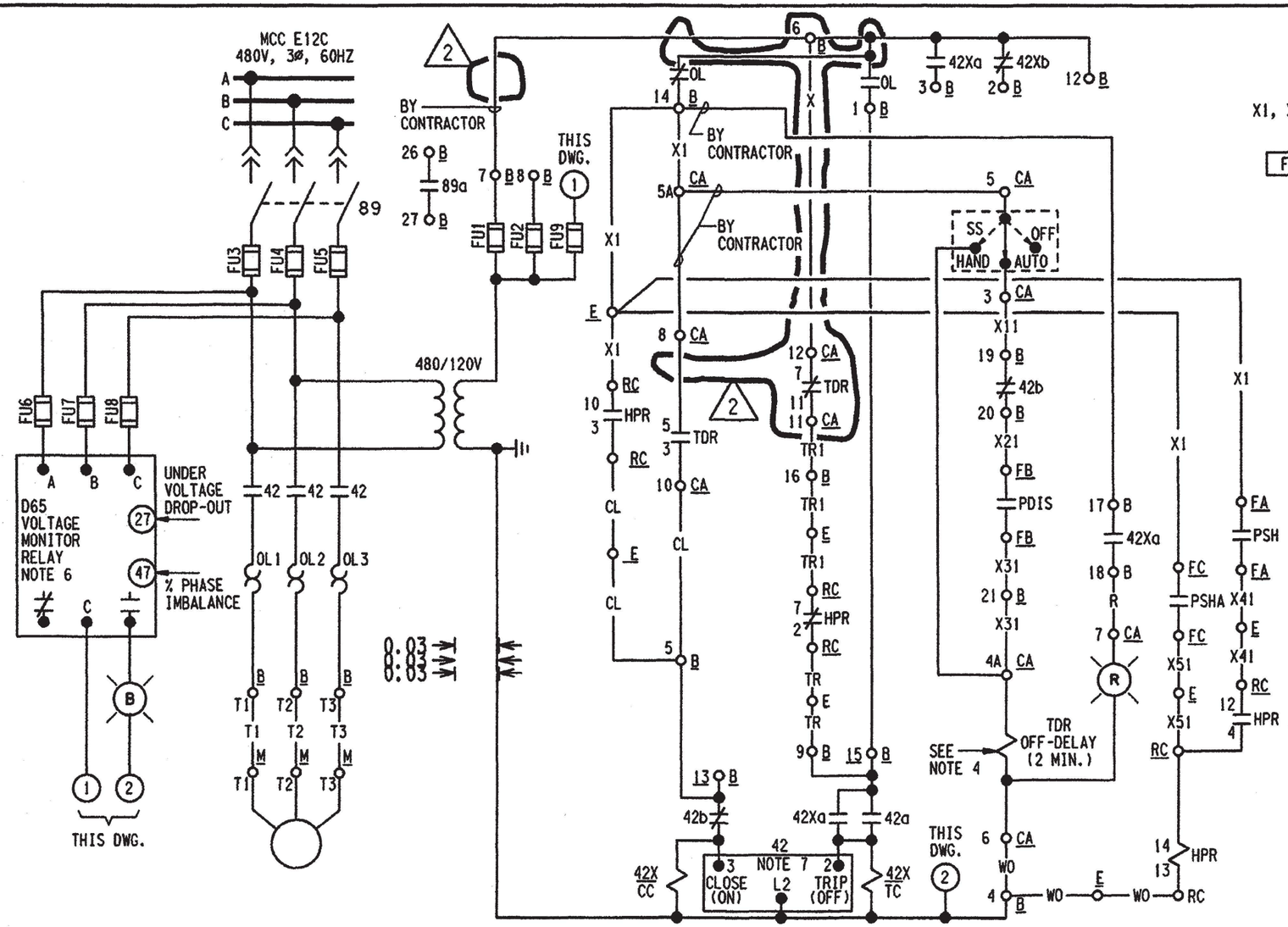

SCHEME NO. BE1274

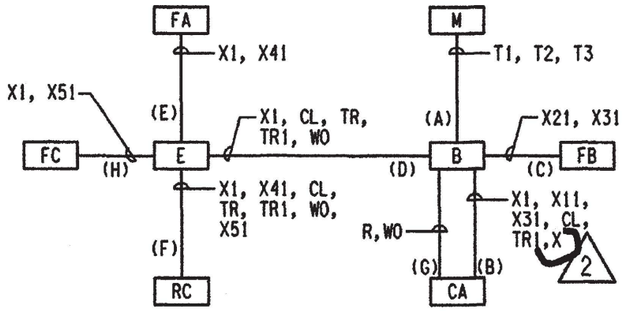

BLOCK DIAGRAM

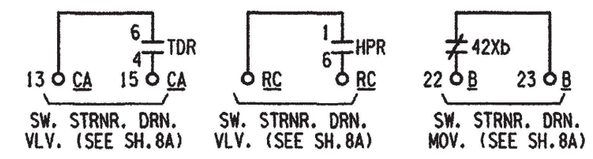

NOTES

1. FOR GENERAL NOTES SEE DWG. E-48B INDEX SHEET.
2. TDR CHANGES CONTACT POSITION ON HIGH DIFF. PRESS. ACROSS STRAINER ON "AUTO", RESETS AT NORMAL DIFF. PRESS.; PSH CONTACT OPENS ON DECREASING PRESS. AT STRAINER. PSHA CLOSES ON INCREASING PRESS. ON STRAINER.
3. DELETED
4. DELETED
5. RELAY 42X IS A CUTLER-HAMMER D26.
6. CONTACTS ARE SHOWN IN SHELF (DE-ENERGIZED) STATE. SEE RELAY SETTING MANUAL FOR SET POINTS. (ECR 03-0507-00)
7. REFERENCE E-008Q-00181 FOR STARTER INTERNALS.
8. 42 DEVICES CONTAIN CONTACTS THAT MAY CHATTER DURING A SEISMIC EVENT (SEE ECP 08-0709 FOR DETAILS).

SCHEME NO.	MCC	S.U. NO.	CHANNEL NO.	EQUIPMENT								DESCRIPTION
				B	M	CA	E	FA	FB	FC	RC	
BE1274	E12C	11	1	BE1274	MF0151	C3017	EV13790	FPSH2917	FPDIS1379A	FPSH2917A	RC3013	SW STRAINER 1-1

SCALE NONE	DESIGNED	DRAWN EAL	DATE 04-28-04

DAVIS-BESSE NUCLEAR POWER STATION
UNIT NO. 1

ELEMENTARY WIRING DIAGRAM
LAKE WATER SYSTEM
SERVICE WATER PUMP STRAINER 1-1

DRAWING NO.	REV.
E-48B SH.7A	2

DB 07-30-12 DFN= F:/SCHEME/E48BS7A.DGN

NO.	DATE	REVISIONS	BY	CH'K	ENGR.	ENGR. SUPV.	GEN. SUPV.
2	8/11/12	INC. DUN 10-0192-001-001 REV.00	SBW	SAC	—	SR	—
0	7-15-04	GEN. UPDATE FOR ECR 03-0507-00 REV.1 PER DCN E-48B-440, ECR 03-0335-00 REV.4 PER DCN E-48B-438 AND ECR 03-0507-00 REV.2 PER DCN E-48B-478 (CR 03-10201CA1) AND ADD NOTE 6 REF. IN D65 VOLTAGE MONITOR RELAY BOX FOR CLARITY.		INITIALS ON FILE			

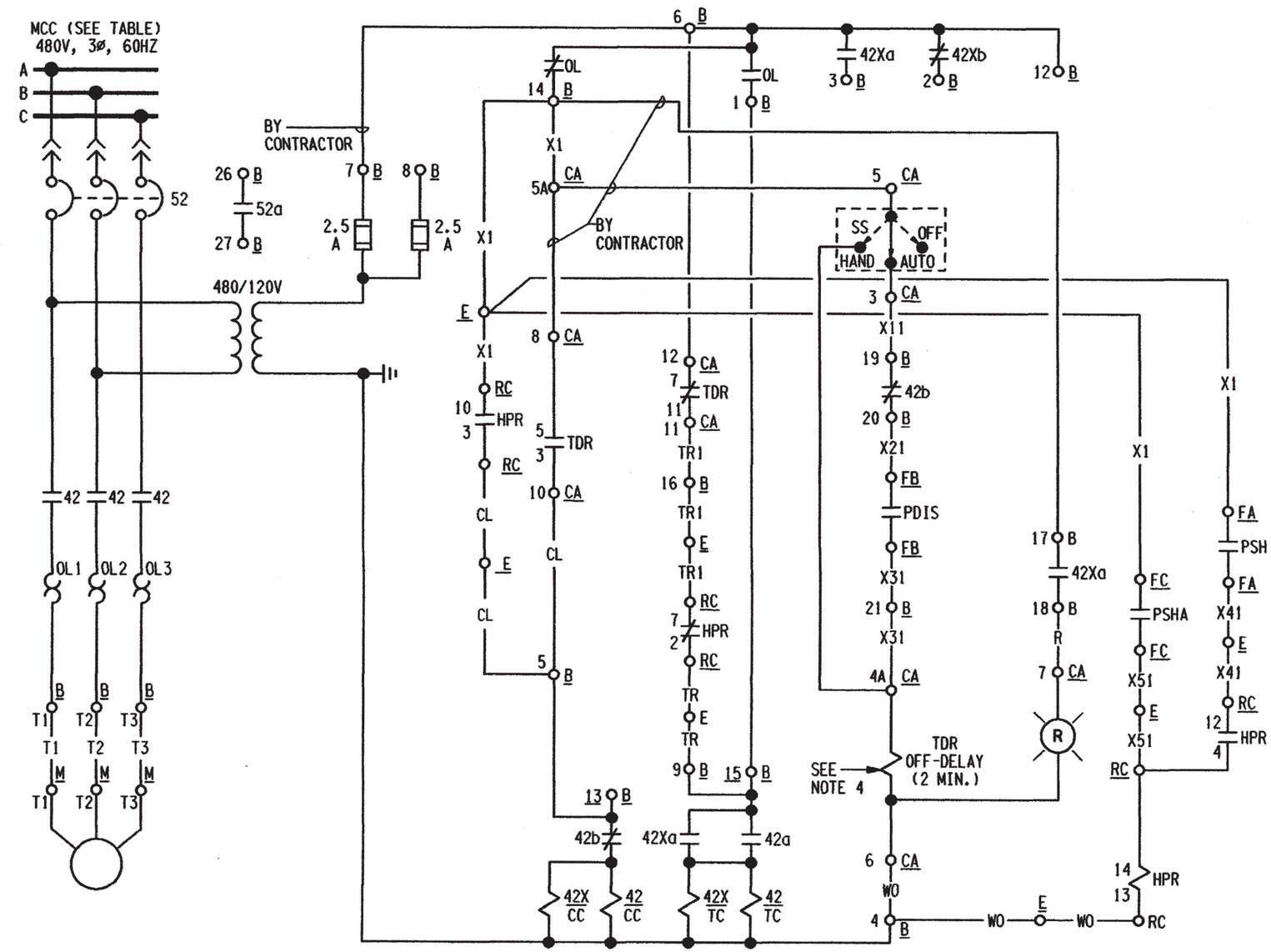

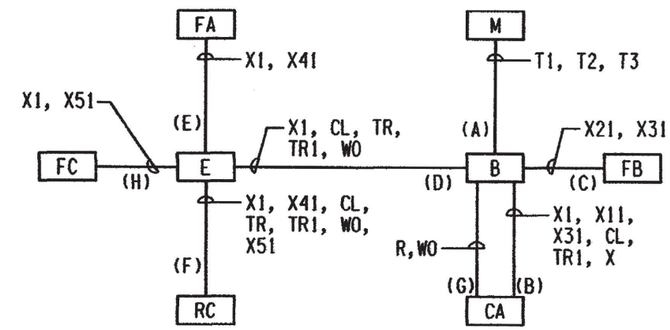

BLOCK DIAGRAM

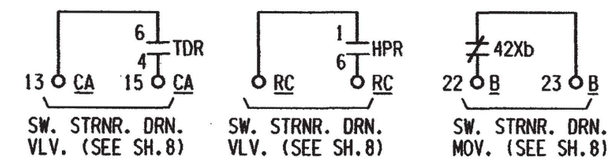

NOTES

1. FOR GENERAL NOTES SEE DWG. E-48B INDEX SHEET.
2. TDR CHANGES CONTACT POSITION ON HIGH DIFF. PRESS. ACROSS STRAINER ON "AUTO", RESETS AT NORMAL DIFF. PRESS.; PSH CONTACT OPENS ON DECREASING PRESS. AT STRAINER. PSHA CLOSES ON INCREASING PRESS. ON STRAINER.
3. DELETED
4. DELETED
5. RELAY 42X IS A POTTER & BRUMFIELD MDR RELAY AND HAS 8 PDT CONTACTS. FOR SPARE CONTACTS SEE DWG'S. E-8-78 & E-80-165.
6. FOR SCHEME NO. BE1274 SERVICE WATER STRAINER 1-1 SEE DWG. E-48B SH.7A.
7. FOR SCHEME NO. BF1274 SERVICE WATER STRAINER 1-2 SEE DWG. E-48B SH.7.
8. TDR RELAY ORIGINALLY AGASTAT MODEL 7022F. ANY FUTURE REPLACEMENT IS TO BE MODEL E-7024F. REF. NCR INFO. NOTICE 87-66 AND ECP 10-0192. (1)

SCHEME NO.	MCC	S.U. NO.	CHANNEL NO.	EQUIPMENT								DESCRIPTION
				B	M	CA	E	FA	FB	FC	RC	
BEF124	EF12C	11	3	BEF124	MF0153	C3019	EV13810	FPSH2919	FPDIS1381A	FPSH2919A	RC3015	SW STRAINER 1-3

SCALE NONE	DESIGNED	DRAWN SAS	DATE 05-03-10

DAVIS-BESSE NUCLEAR POWER STATION
UNIT NO. 1

ELEMENTARY WIRING DIAGRAM
LAKE WATER SYSTEM
SERVICE WATER PUMP STRAINER 1-3

Q

FENOC

DRAWING NO.	REV.
E-48B SH.7B	1

DB 06-25-13 DFN= F:/SCHEME/E48BS7B.DGN

NO.	DATE	REVISIONS
1	8/15/2013	INC. DUN 10-0192-003-006 REV.00
0	5-10-10	ISSUED FOR ECP 10-0192-003-001 PER DUN10-0192-003-001 REV.01 PAGE 2 OF 2

BY	CH'K	ENGR.	ENGR. SUPV.	GEN. SUPV.
SBW	SMC	—	—	—

INITIALS ON FILE

NEWFAX 3/85 N58313 ED 7489

NO.	DATE	REVISIONS	BY	CH'K	ENGR.	ENGR. SUPV.	GEN. SUPV.
13	10/5/04	INC. DCN E-48B-441 PER ECR 03-0507-00 REV.1 (NO DWG. CHANGE SEE SH.8A) AND GEN. UPDATE RELOCATE SCHEME BE1275 TO E-48B SH.8A, ADD NOTE 9, RELOCATE PDIS1379 DETAIL TO SH.8A AND ADJUST DWG. TITLE PER DWG. SPLIT (REDRAWN)	EAL	SBW		CER	

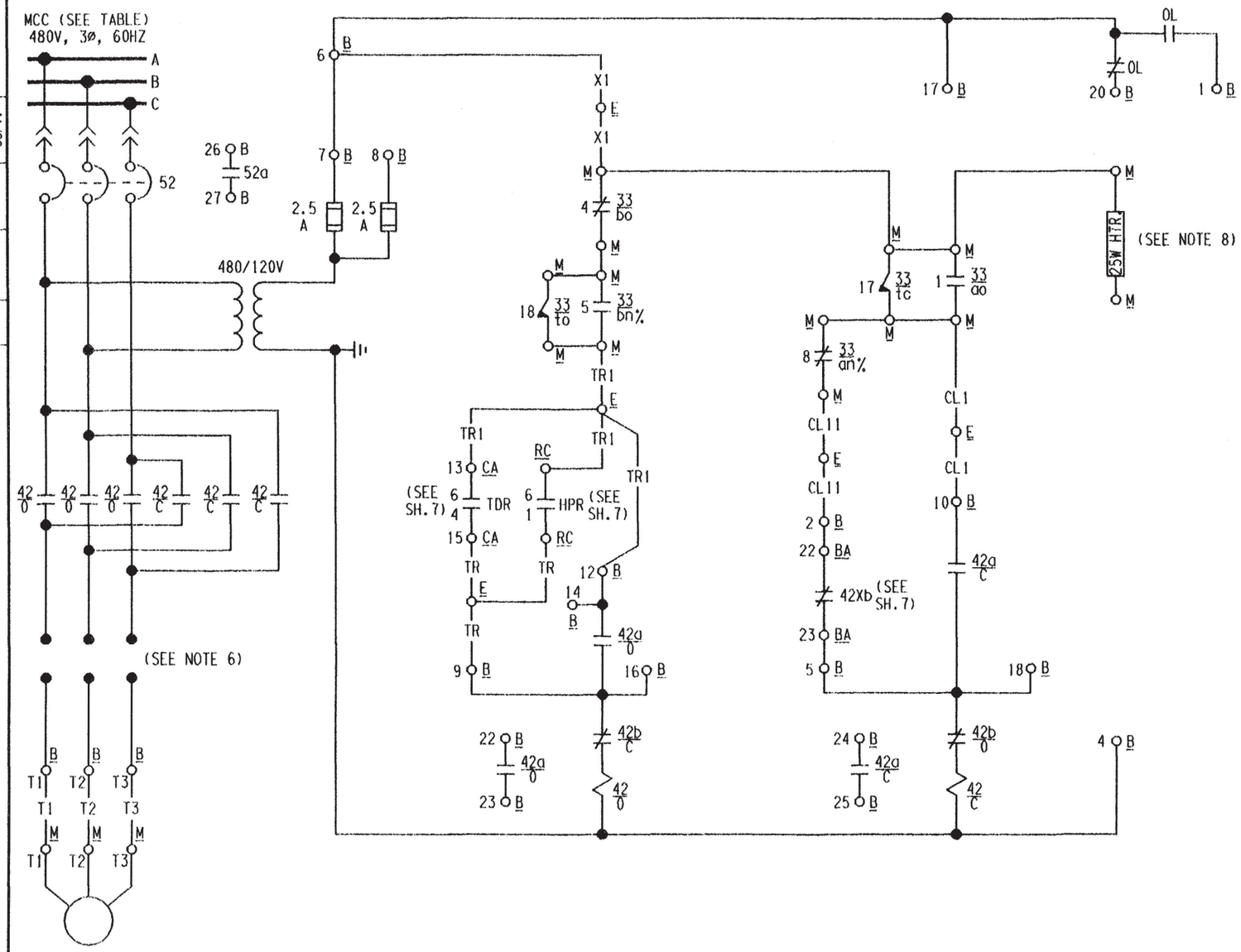

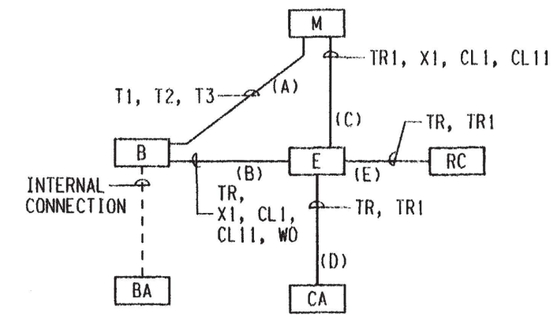

BLOCK DIAGRAM

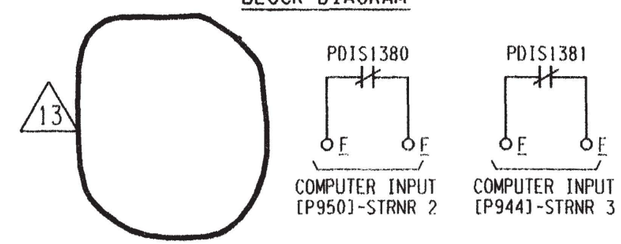

NOTES

1. FOR GENERAL NOTES SEE DWG. E-48B INDEX SH.
2. FOR VALVE LIMIT SW. CONTACT DEVELOPMENT SEE DWG. E-30B SH.8 FIG.A (SEE NOTE 7 THIS SHEET).
3. FOR INTERNAL WIRING OF LOCAL PANEL CA SEE R.P. ADAMS DWG. 35405 (M234-11-1).
4. TDR CONTACT CLOSES ON HIGH DIFF. PRESS. ON "AUTOMATIC" & HPR CONTACT CLOSES ON HIGH PRESS. AT SERVICE WATER STRAINER.
5. CONTRACTOR SHALL ADD JUMPER BETWEEN TERMINALS 6 & 7 OF STARTER.
6. OVERLOAD HEATERS REPLACED BY SHORTING BARS.
7. FIELD TO ADJUST ROTOR #2 WITH SWITCH CONTACTS 5 THRU 8 TO ACTUATE WHEN VALVE REACHES 20% OPEN +5%, -0%.
8. THE 25W HEATER HAS BEEN REMOVED FROM MOTOR MV13800.
9. FOR SCHEME NO. BE1275 SERVICE WATER STRAINERS DRAIN SEE DWG. E-48B SH.8A. 13

THIS DRAWING WAS REDRAWN ON CADD AND SUPERSEDES REVISION 12

SCHEME NO.	MCC	S.U. NO.	CHANNEL	EQUIPMENT CA	B	E	M	BA	RC	DESCRIPTION
BF1275	F12C	11	2	C3018	BF1275	EV13800	MV13800	BF1274	RC3014	SERVICE WATER STRNR 1-2 DRAIN VLV
BEF125	EF12C	11	3	C3019	BEF125	EV13810	MV13810	BEF124	RC3015	SERVICE WATER STRNR 1-3 DRAIN VLV

13

SCALE NONE	DESIGNED	DRAWN EAL	DATE 04-16-04

DAVIS-BESSE NUCLEAR POWER STATION
UNIT NO. 1
THE TOLEDO EDISON COMPANY

ELEMENTARY WIRING DIAGRAM
LAKE WATER SYSTEM 13 Q
SERVICE WATER STRAINERS 1-2 & 1-3 DRAIN VLV

DRAWING NO.	REV.
E-48B SH.8	13

DB 04-16-04 DFN= F:/SCHEME/E48BS8.DGN

NEWFAX 3/85 N58313 ED 7489

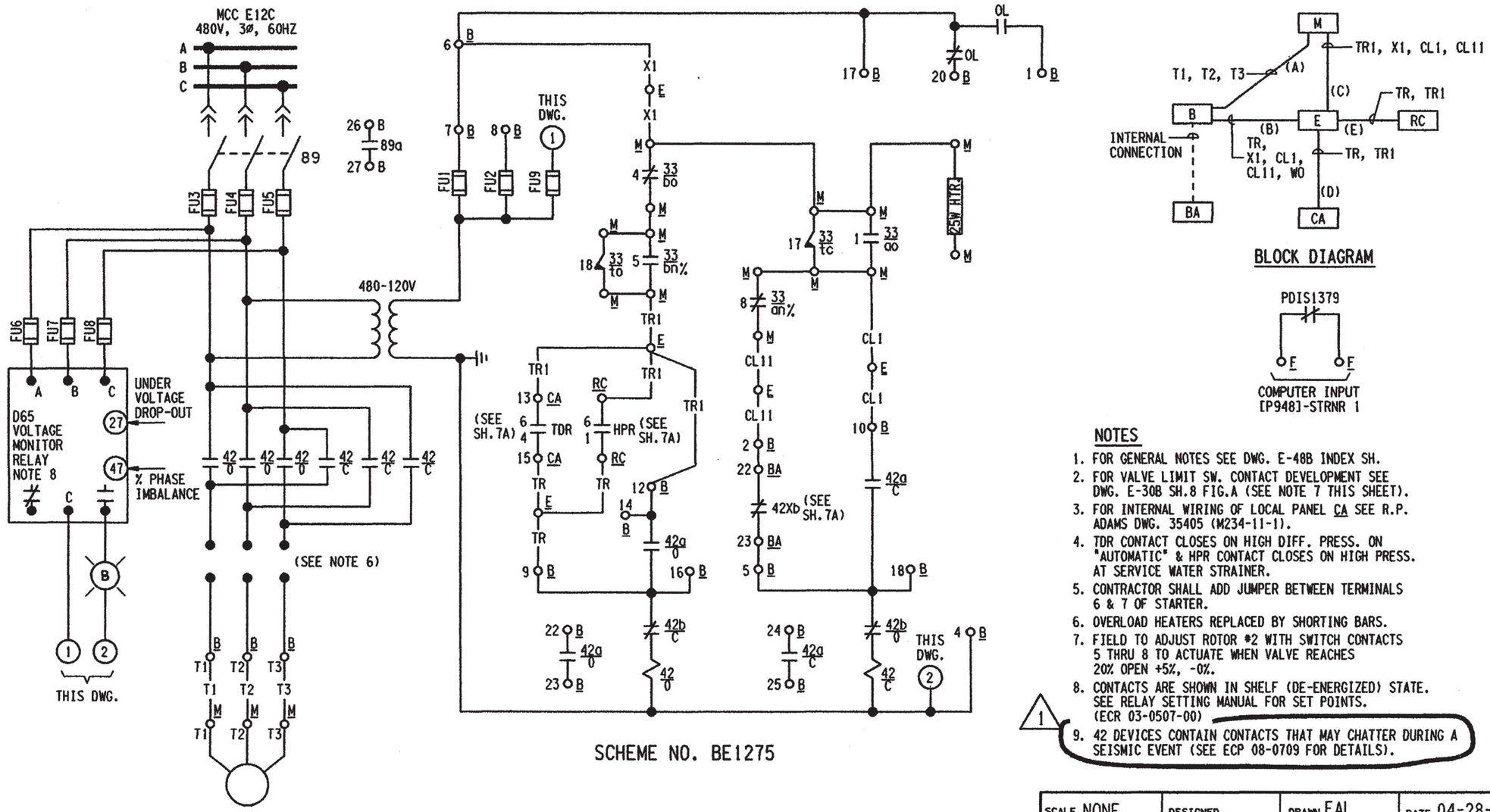

SCHEME NO. BE1275

BLOCK DIAGRAM

NOTES

1. FOR GENERAL NOTES SEE DWG. E-48B INDEX SH.
2. FOR VALVE LIMIT SW. CONTACT DEVELOPMENT SEE DWG. E-30B SH.8 FIG.A (SEE NOTE 7 THIS SHEET).
3. FOR INTERNAL WIRING OF LOCAL PANEL CA SEE R.P. ADAMS DWG. 35405 (M234-11-1).
4. TDR CONTACT CLOSES ON HIGH DIFF. PRESS. ON "AUTOMATIC" & HPR CONTACT CLOSES ON HIGH PRESS. AT SERVICE WATER STRAINER.
5. CONTRACTOR SHALL ADD JUMPER BETWEEN TERMINALS 6 & 7 OF STARTER.
6. OVERLOAD HEATERS REPLACED BY SHORTING BARS.
7. FIELD TO ADJUST ROTOR #2 WITH SWITCH CONTACTS 5 THRU 8 TO ACTUATE WHEN VALVE REACHES 20% OPEN +5%, -0%.
8. CONTACTS ARE SHOWN IN SHELF (DE-ENERGIZED) STATE. SEE RELAY SETTING MANUAL FOR SET POINTS. (ECR 03-0507-00)
9. 42 DEVICES CONTAIN CONTACTS THAT MAY CHATTER DURING A SEISMIC EVENT (SEE ECP 08-0709 FOR DETAILS).

SCHEME NO.	MCC	S.U. NO.	CHANNEL	EQUIPMENT						DESCRIPTION
				CA	B	E	M	BA	RC	
BE1275	E12C	11	1	C3017	BE1275	EV13790	MV13790	BE1274	RC3013	SERVICE WATER STRNR 1-1 DRAIN VLV

SCALE NONE	DESIGNED	DRAWN EAL	DATE 04-28-04

DAVIS-BESSE NUCLEAR POWER STATION
UNIT NO. 1

ELEMENTARY WIRING DIAGRAM
LAKE WATER SYSTEM
SERVICE WATER STRAINER 1-1 DRAIN VLV

DRAWING NO.	REV.
E-48B SH.8A	1

NO.	DATE	REVISIONS	BY	CH'K	ENGR.	ENGR. SUPV.	GEN. SUPV.
1	7-14-09	INC. DUN 08-0709-001-024, REV.00					
0	7-15-04	GEN. UPDATE FOR ECR 03-0507-00 REV.1 PER DCN E-48B-441 AND ADD NOTE 8 REF. IN D65 VOLTAGE MONITOR RELAY BOX FOR CLARITY	SAS	SAS	—	—	—

INITIALS ON FILE

DB 06-19-09 DFN= F:/SCHEME/E48BS8A.DGN

SCHEME NO.	MCC	S.U. NO.	CHANNEL	WIRE PREFIX AT MAIN CTRL. BD	C.S.	EQUIPMENT C	CD	B	E	M	N	F	SA1	SA2	SA3	SA4	SA OUTPUT RELAY KA	KB	DESCRIPTION
BF1277	F12C	011	2	CXB	HIS1395	C5717	CDF12C	BF1277	EV13950	MV13950	NV13950	FPSL1377A	—	C5755D	—	C5756C	K27F	K27F	SW. ISO. VLV. TO CLNG. WTR. 1395

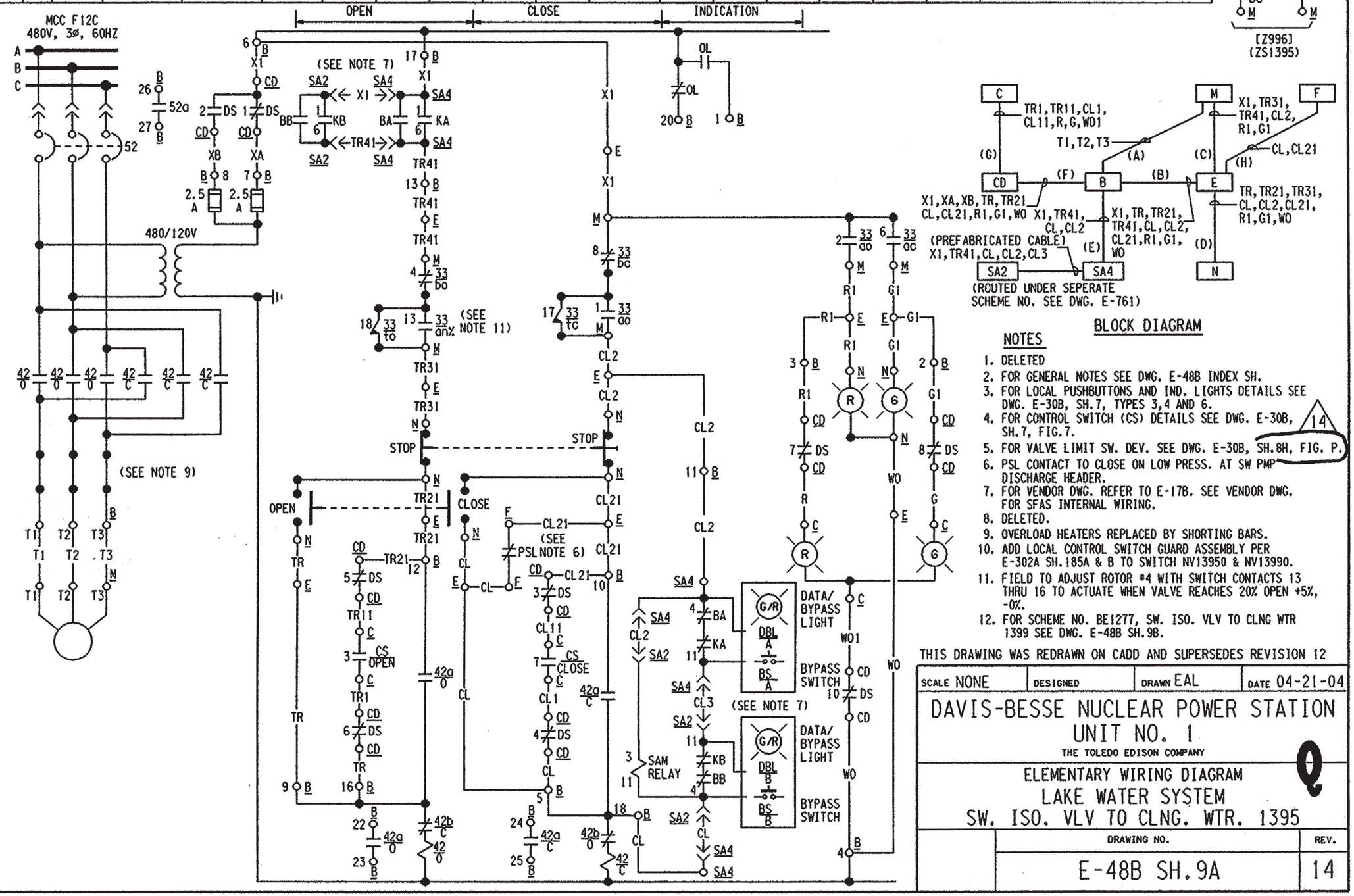

NOTES

1. DELETED
2. FOR GENERAL NOTES SEE DWG. E-48B INDEX SH.
3. FOR LOCAL PUSHBUTTONS AND IND. LIGHTS DETAILS SEE DWG. E-30B, SH.7, TYPES 3,4 AND 6.
4. FOR CONTROL SWITCH (CS) DETAILS SEE DWG. E-30B, SH.7, FIG.7.
5. FOR VALVE LIMIT SW. DEV. SEE DWG. E-30B, SH.8H, FIG. P. 14
6. PSL CONTACT TO CLOSE ON LOW PRESS. AT SW PMP DISCHARGE HEADER.
7. FOR VENDOR DWG. REFER TO E-17B. SEE VENDOR DWG. FOR SFAS INTERNAL WIRING.
8. DELETED.
9. OVERLOAD HEATERS REPLACED BY SHORTING BARS.
10. ADD LOCAL CONTROL SWITCH GUARD ASSEMBLY PER E-302A SH.185A & B TO SWITCH NV13950 & NV13990.
11. FIELD TO ADJUST ROTOR #4 WITH SWITCH CONTACTS 13 THRU 16 TO ACTUATE WHEN VALVE REACHES 20% OPEN +5%, -0%.
12. FOR SCHEME NO. BE1277, SW. ISO. VLV TO CLNG WTR 1399 SEE DWG. E-48B SH.9B.

THIS DRAWING WAS REDRAWN ON CADD AND SUPERSEDES REVISION 12

SCALE NONE	DESIGNED	DRAWN EAL	DATE 04-21-04

DAVIS-BESSE NUCLEAR POWER STATION
UNIT NO. 1
THE TOLEDO EDISON COMPANY

ELEMENTARY WIRING DIAGRAM
LAKE WATER SYSTEM
SW. ISO. VLV TO CLNG. WTR. 1395

DRAWING NO.	REV.
E-48B SH.9A	14

NO.	DATE	REVISIONS	BY	CH'K	ENGR.	ENGR. SUPV.	GEN. SUPV.
14	8-15-06	INC. DCN E-48B-483 PER ECR 05-0204-00 (CA 03-09353-002)	SBW	TOR	CER	—	—
13	7/9/04	INC. DCN E-48B-446 PER ECR 03-0507-00 REV.1 (NO DWG. CHANGE SEE SH.9B) AND BE1277 INFO. TO E-48B SH.9B & ADD BF1277 INFO. FROM E-48B SH.9B, ADD NOTE 12, REVISE DWG. TITLE, BLOCK DIAGRAM, DELETE NOTE 1 PER INFO. RELOCATION ABOVE (REDRAWN)					

INITIALS ON FILE

SCHEME NO.	MCC	S.U. NO.	CHANNEL	WIRE PREFIX AT MAIN CTRL. BD	C.S.	EQUIPMENT C	CD	B	E	M	N	F	SA1	SA2	SA3	SA4	SA OUTPUT RELAY KA	KB	DESCRIPTION
BE1277	E12C	011	1	CXA	HIS1399	C5717	CDE12C	BE1277	EV13990	MV13990	NV13990	FPSL1376A	C5762D	—	C5763C	—	K27F	K27F	SW. ISO. VLV. TO CLNG. WTR. 1399

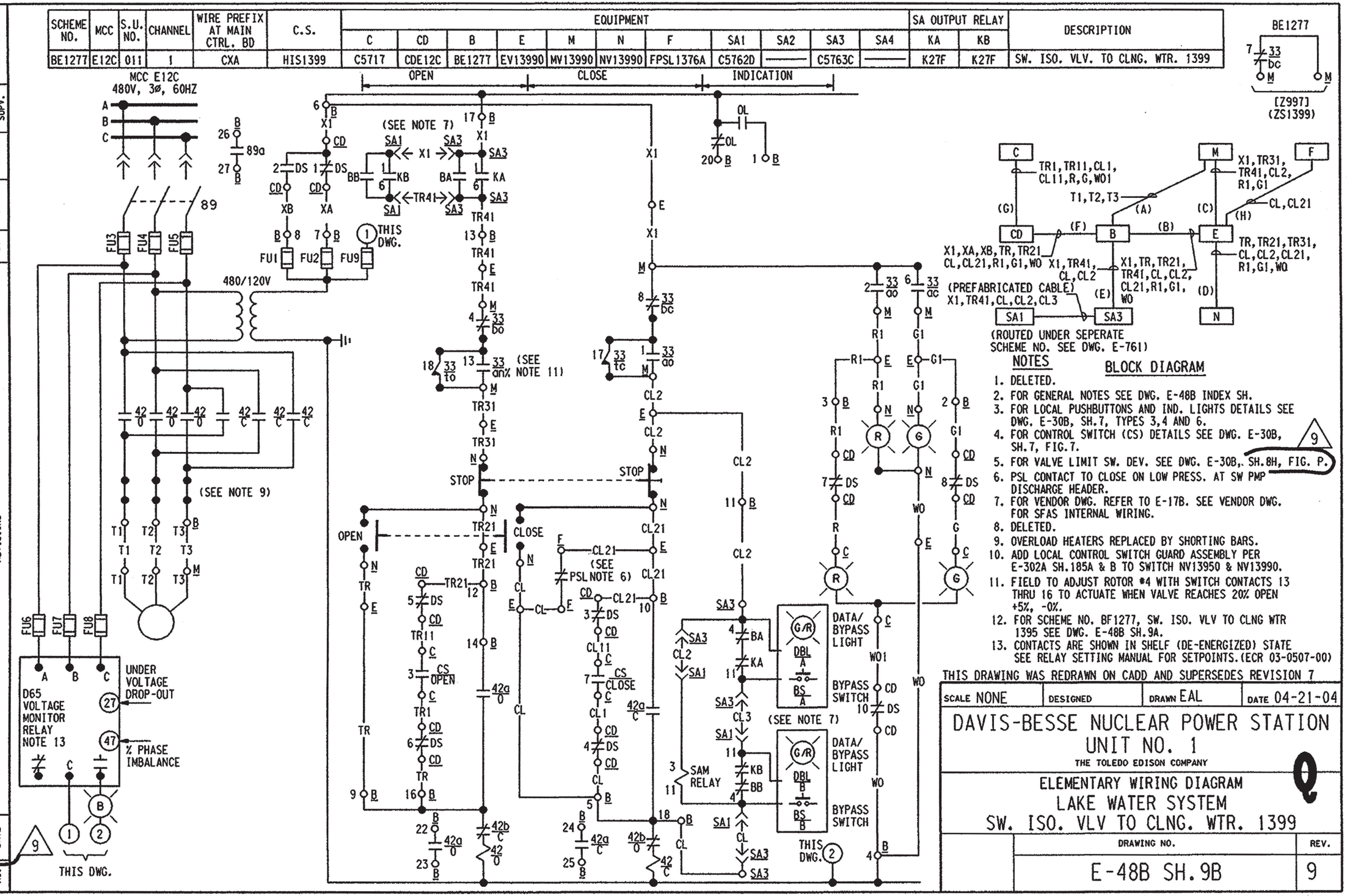

NOTES

1. DELETED.
2. FOR GENERAL NOTES SEE DWG. E-48B INDEX SH.
3. FOR LOCAL PUSHBUTTONS AND IND. LIGHTS DETAILS SEE DWG. E-30B, SH.7, TYPES 3,4 AND 6.
4. FOR CONTROL SWITCH (CS) DETAILS SEE DWG. E-30B, SH.7, FIG.7.
5. FOR VALVE LIMIT SW. DEV. SEE DWG. E-30B, SH.8H, FIG. P. 9
6. PSL CONTACT TO CLOSE ON LOW PRESS. AT SW PMP DISCHARGE HEADER.
7. FOR VENDOR DWG. REFER TO E-17B. SEE VENDOR DWG. FOR SFAS INTERNAL WIRING.
8. DELETED.
9. OVERLOAD HEATERS REPLACED BY SHORTING BARS.
10. ADD LOCAL CONTROL SWITCH GUARD ASSEMBLY PER E-302A SH.185A & B TO SWITCH NV13950 & NV13990.
11. FIELD TO ADJUST ROTOR #4 WITH SWITCH CONTACTS 13 THRU 16 TO ACTUATE WHEN VALVE REACHES 20% OPEN +5%, -0%.
12. FOR SCHEME NO. BF1277, SW. ISO. VLV TO CLNG WTR 1395 SEE DWG. E-48B SH.9A.
13. CONTACTS ARE SHOWN IN SHELF (DE-ENERGIZED) STATE SEE RELAY SETTING MANUAL FOR SETPOINTS.(ECR 03-0507-00)

BLOCK DIAGRAM

THIS DRAWING WAS REDRAWN ON CADD AND SUPERSEDES REVISION 7

SCALE NONE	DESIGNED	DRAWN EAL	DATE 04-21-04

DAVIS-BESSE NUCLEAR POWER STATION
UNIT NO. 1
THE TOLEDO EDISON COMPANY

ELEMENTARY WIRING DIAGRAM
LAKE WATER SYSTEM
SW. ISO. VLV TO CLNG. WTR. 1399

DRAWING NO.	REV.
E-48B SH.9B	9

NO.	DATE	REVISIONS
9	9-15-05	INC. DCN E-48B-484 PER ECR 05-0204-00 (CA 03-09353-002) GEN. UPDATE REV. 13 TO 8 LAST UPDATE
8	7/9/04	GEN. UPDATE FOR ECR 03-0507-00 REV.1 PER DCN E-48B-446 & RELOCATE BF1277 INFO. TO E-48B SH.9A & ADD BE1277 INFO. FROM E-48B SH.9A, ADD NOTE 12, REVISE DWG. TITLE, BLOCK DIAGRAM, DELETE NOTE 1 PER INFO. RELOCATION ABOVE, ADD NOTE 13 REF. IN D65 VOLTAGE RELAY BOX FOR CLARITY (REDRAWN)

GEN. SUPV. — ENGR. SUPV. — ENGR. CER — CH'K — BY SBW

INITIALS ON FILE

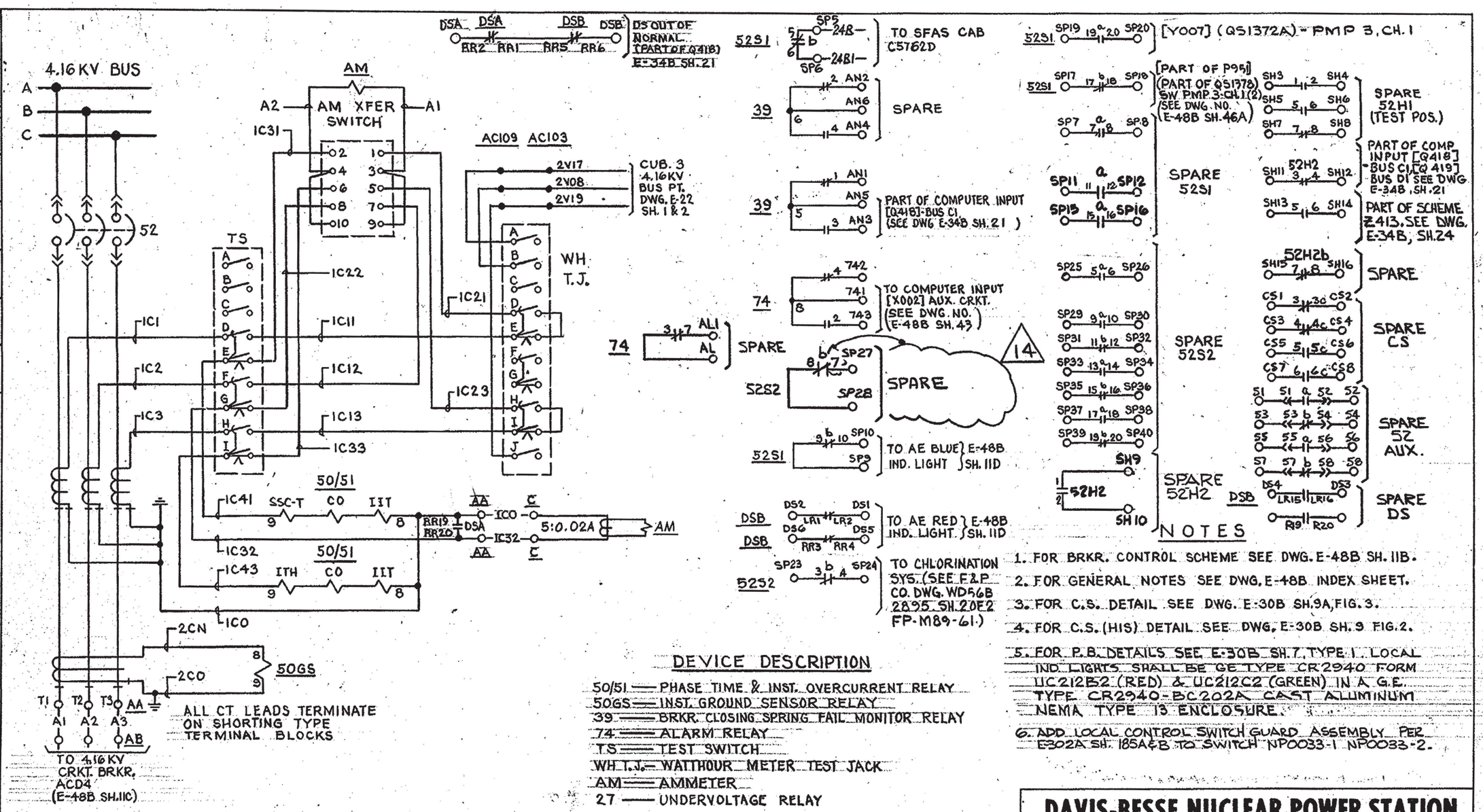

DEVICE DESCRIPTION

50/51 — PHASE TIME & INST. OVERCURRENT RELAY
50GS — INST. GROUND SENSOR RELAY
39 — BRKR. CLOSING SPRING FAIL MONITOR RELAY
74 — ALARM RELAY
TS — TEST SWITCH
WH T.J. — WATTHOUR METER TEST JACK
AM — AMMETER
27 — UNDERVOLTAGE RELAY

NOTES

1. FOR BRKR. CONTROL SCHEME SEE DWG. E-48B SH. IIB.
2. FOR GENERAL NOTES SEE DWG. E-48B INDEX SHEET.
3. FOR C.S. DETAIL SEE DWG. E-30B SH.9A, FIG. 3.
4. FOR C.S. (HIS) DETAIL SEE DWG. E-30B SH. 9 FIG. 2.
5. FOR P.B. DETAILS SEE E-30B SH. 7. TYPE I. LOCAL IND. LIGHTS SHALL BE GE TYPE CR2940 FORM UC212B2 (RED) & UC212C2 (GREEN) IN A G.E. TYPE CR2940-BC202A CAST ALUMINUM NEMA TYPE 13 ENCLOSURE.
6. ADD LOCAL CONTROL SWITCH GUARD ASSEMBLY PER E302A SH. 185A&B TO SWITCH NP0033-1 NP0033-2.

LEGEND

SCHEME NO.	S.U. NO.	CH.	WIRE PREFIX AT MAIN CTRL. BD.	CS (HIS)	AM (AT C)	BUS	SWGR. UNIT	EQUIPMENT C	CA	AA	AB	N	SA1		SA3		SA OUTPUT RELAY KA	KB
AC109	11	1	SWC	HIS1372A	II1372A	C1	9	C5716	C5715	AC109	ACD4	NP0033-1	C5762C		C5763D		K24B	K24B

REV.	DESCRIPTION	DATE	DR	CHK	SUPV	CHIEF	PROJ	OWNER
13	INC. DCN E-48B-256 FOR FPR 90-1881-901	6/7/93	JOR	SBW	JJS	—	—	—
14	INC. DCN E-48B-262 PER MOD 93-0028	4-8-96	SBW	SNF	GEM	—	—	—
0	ISSUED FOR CONSTRUCTION	1/23/87	APC	MIA				

DAVIS-BESSE NUCLEAR POWER STATION

THE TOLEDO EDISON COMPANY
THE CLEVELAND ELECTRIC ILLUMINATING COMPANY

ELEMENTARY WIRING DIAGRAMS

LAKE WATER SYSTEM
SERVICE WATER PUMP 3 CH. 1

BECHTEL COMPANY	JOB NO.	DRAWING NO.	REV.
	7749	E-48B SH. IIA	14

G-231-D

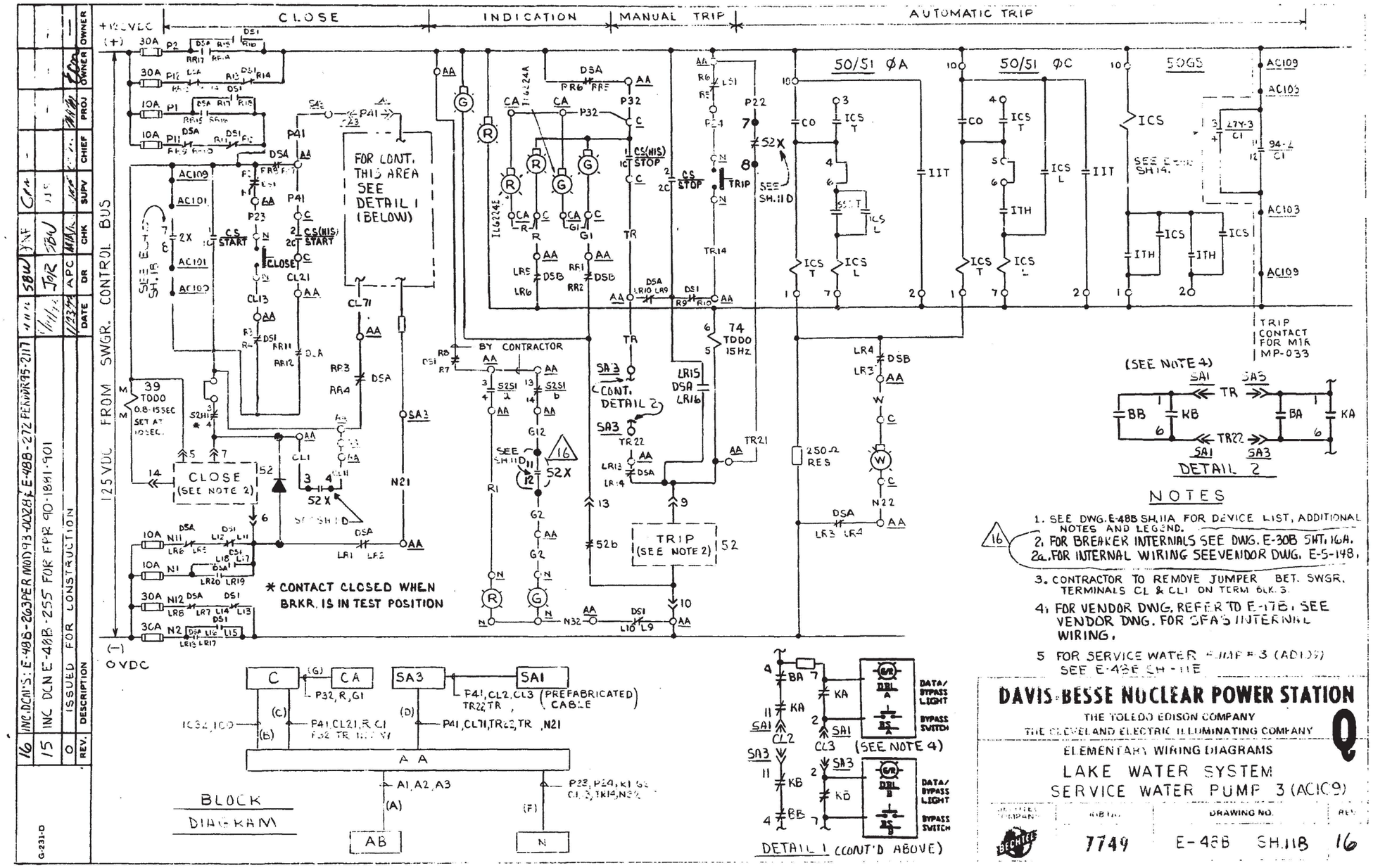

NOTES

1. SEE DWG. E-48B SH. 11A FOR DEVICE LIST, ADDITIONAL NOTES AND LEGEND.
2. FOR BREAKER INTERNALS SEE DWG. E-30B SHT. 16A.
2a. FOR INTERNAL WIRING SEE VENDOR DWG. E-5-148.
3. CONTRACTOR TO REMOVE JUMPER BET. SWGR. TERMINALS CL & CL1 ON TERM BLK. 3.
4. FOR VENDOR DWG. REFER TO E-17B. SEE VENDOR DWG. FOR SFA'S INTERNAL WIRING.
5. FOR SERVICE WATER PUMP # 3 (AD109) SEE E-48B SH. 11E.

DAVIS-BESSE NUCLEAR POWER STATION

THE TOLEDO EDISON COMPANY

THE CLEVELAND ELECTRIC ILLUMINATING COMPANY

ELEMENTARY WIRING DIAGRAMS

LAKE WATER SYSTEM

SERVICE WATER PUMP 3 (AC109)

BECHTEL COMPANY	JOB NO.	DRAWING NO.	REV.
BECHTEL	7749	E-48B SH. 11B	16