APR1400
DESIGN CONTROL DOCUMENT TIER 1

APR1400-K-X-IT-14001-NP
REVISION 3
AUGUST 2018

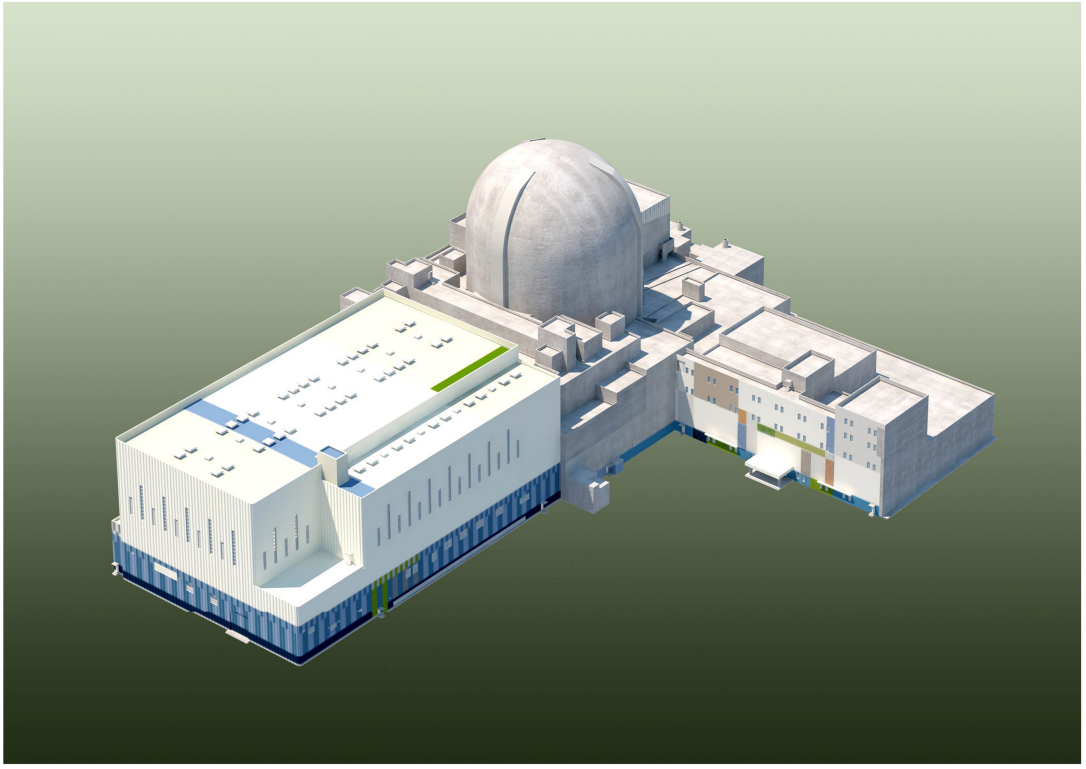

KOREA ELECTRIC POWER CORPORATION
KOREA HYDRO & NUCLEAR POWER CO., LTD

TABLE OF CONTENTS

LIST OF TABLES

LIST OF FIGURES

ACRONYM AND ABBREVIATION LIST

AAC	alternate alternating current
AB	auxiliary building
AC	alternating current
ACC	analysis computer cabinet
ACP	auxiliary charging pump
ACU	air cleaning unit
AFAS	auxiliary feedwater actuation signal
AFW	auxiliary feedwater
AFWS	auxiliary feedwater system
AFWST	auxiliary feedwater storage tank
AHU	air handling unit
ALARA	as low as reasonably achievable
ANSI	American National Standards Institute
AOO	anticipated operational occurrence
AOV	air-operated valve
APC	auxiliary process cabinet
ARMS	area radiation monitoring system
ASME	American Society of Mechanical Engineers
ATWS	anticipated transient without scram
BAMP	boric acid makeup pump
BAST	boric acid storage tank
BFTHHLAS	blowdown flash tank high-high level actuation signal
BISI	bypassed and inoperable status indication
BOP	balance of plant
CCF	common cause failure
CCS	component control system
CCW	component cooling water
CCWS	component cooling water system
CEA	control element assembly

CEACP	CEA change platform
CEAE	CEA elevator
CEDM	control element drive mechanism
CET	core exit thermocouple
CFR	Code of Federal Regulations
CFS	cavity flooding system
CGID	commercial grade item dedication
CHCS	containment hydrogen control system
CIAS	containment isolation actuation signal
CIS	containment isolation system
CIV	containment isolation valve
COL	combined license
COLSS	core operating limit supervisory system
CPC	core protection calculator
CPCS	core protection calculator system
CPIAS	containment purge isolation actuation signal
CRE	control room envelope
CREVAS	control room emergency ventilation actuation signal
CS	containment spray
CSAS	containment spray actuation signal
CSB	core support barrel
CSP	containment spray pump
CSS	containment spray system
CV	control valve
CVCS	chemical and volume control system
CW	circulating water
CWS	circulating water system
DAC	design acceptance criteria
DAW	dry active waste
DBA	design basis accident

DBE	design basis event
DC	direct current
DCD	design control document
DDT	deflagration to detonation transition
DFOT	diesel fuel oil tank
DIS	diverse indication system
DMA	diverse manual ESF actuation
DNBR	departure from nucleate boiling ratio
DPS	diverse protection system
DRCS	digital rod control system
DVI	direct vessel injection
EAB	exclusion area boundary
ECSBS	emergency containment spray backup system
ECWS	essential chilled water system
EDG	emergency diesel generator
EDT	equipment drain tank
EFDS	equipment and floor drainage system
EHC	electro-hydraulic control
E/H	electro-hydraulic
EMI	electromagnetic interference
EOC	emergency operations center
EOF	emergency operations facility
EPRI	Electric Power Research Institute
ERDS	emergency response data system
ESD	electrostatic discharge
ESF	engineered safety features
ESFAS	engineered safety features actuation system
ESF-CCS	engineered safety features-component control system
ESR	electro-hydraulic spring return
ESW	essential service water

ESWS	essential service water system
FHEVAS	fuel handling area emergency ventilation actuation signal
FP	fire protection
FPD	flat panel display
FPS	fire protection system
FTS	fuel transfer system
FWCS	feedwater control system
GCB	generator circuit breaker
GDC	general design criteria (of 10 CFR Part 50, Appendix A)
GTG	gas turbine generator
GWMS	gaseous waste management system
HFE	human factors engineering
HI	hydrogen ignitor
HJTC	heated junction thermo couple
HRAS	high radiation actuation signal
HSI	human-system interface
HVAC	heating, ventilation, and air conditioning
HVT	holdup volume tank
HX	heat exchanger
I&C	instrumentation and control
ICI	in-core instrumentation
IHA	integrated head assembly
IP	implementation plan
IPS	information processing system
IRWST	in-containment refueling water storage tank
ISV	intermediate stop valve
ITAAC	inspections, tests, analyses, and acceptance criteria
ITP	interface and test processor
IV	intercept valve
IWSS	in-containment water storage system

LBB	leak before break
LC	load center
LCS	local control station
LLHS	light load handling system
LOCA	loss of coolant accident
LOOP	loss of offsite power
LPD	local power density
LPZ	low population zone
LTOP	low temperature overpressure protection
LWMS	liquid waste management system
MCC	motor control center
MCR	main control room
MFIV	main feedwater isolation valve
MG	motor-generator
MG Set	motor-generator set
MOV	motor-operated valve
MSADV	main steam atmospheric dump valve
MSIS	main steam isolation signal
MSIV	main steam isolation valve
MSLB	main steam line break
MSR	moisture separator reheater
MSS	main steam system
MSSV	main steam safety valve
MSV	main steam valve
MSVH	main steam valve house
MT	main transformer
MTP	maintenance and test panel
NDE	nondestructive examination
NFE	new fuel elevator
NFS	nuclear fuel system

NI	nuclear island
NNS	non-nuclear safety
NPCS	NSSS process control system
NPSH	net positive suction head
NPSHA	net positive suction head available
NR	narrow range
NRC	United States Nuclear Regulatory Commission
NSSS	nuclear steam supply system
NUREG	NRC technical report designation
OHLHS	overhead heavy load handling system
OM	operator module
OPC	open phase condition
OPD	open phase detection
OSC	operational support center
PAR	passive autocatalytic recombiner
PCB	power circuit breaker
P-CCS	process-component control system
PCS	power control system
PCWS	plant chilled water system
PERMSS	process and effluent radiation monitoring and sampling system
PLCS	pressurizer level control system
PMWP	probable maximum winter precipitation
PNS	permanent non-safety
POSRV	pilot operated safety relief valve
PPASS	process and post-accident sampling system
PPCS	pressurizer pressure control system
PPS	plant protection system
PSC	piping system and components
PSR	pneumatic spring return
PX	primary sampling system

PZR	pressurizer
QA	quality assurance
QIAS	qualified indication and alarm system
QIAS-N	qualified indication and alarm system – non-safety
QIAS-P	qualified indication and alarm system – post-accident monitoring
RAP	reliability assurance program
RCB	reactor containment building
RCFC	reactor containment fan cooler
RCGVS	reactor coolant gas vent system
RCP	reactor coolant pump
RCS	reactor coolant system
RFI	radio frequency interference
RG	regulatory guide
RM	refueling machine
RMWT	reactor makeup water tank
R/O	reverse osmosis
RPCS	reactor power cutback system
RPS	reactor protection system
RRS	reactor regulating system
RSR	remote shutdown room
RSSH	resin sluice supply header
RSPT	reed switch position transmitter
RTSG	reactor trip switchgear
RTSS	reactor trip switchgear system
RV	reactor vessel
SBCS	steam bypass control system
SBO	station blackout
SC	shutdown cooling
SCP	shutdown cooling pump
SCS	shutdown cooling system

SDCHX	shutdown cooling heat exchanger
SFHM	spent fuel handling machine
SFP	spent fuel pool
SFPCCS	spent fuel pool cooling and cleanup system
SG	steam generator
SGBS	steam generator blowdown system
SI	safety injection
SIAS	safety injection actuation signal
SIS	safety injection system
SIT	safety injection tank
SOV	solenoid-operated valve
SRDC	safety-related divisional cabinet
SSC	structures, systems, and components
SSE	safe shutdown earthquake
SWMS	solid waste management system
TDH	total dynamic head
T/G	turbine-generator
TGBCCW	turbine generator building closed cooling water
TGBOCWS	turbine generator building open cooling water system
TSC	technical support center
TSP	tri-sodium phosphate
UAT	unit auxiliary transformer
UGS	upper guide structure
UHS	ultimate heat sink
V&V	verification and validation
VCT	volume control tank
WR	wide range

1.0 Introduction

1.1 Definitions

The following definitions apply to terms used in the Design Descriptions and associated Inspections, Tests, Analyses, and Acceptance Criteria (ITAAC):

Acceptance Criteria means the performance, physical condition, or analysis result for a structure, system or component that demonstrates the Design Commitment is met.

Analysis means a calculation, mathematical computation, or engineering or technical evaluation. Engineering or technical evaluations could include, but are not limited to, comparisons with operating experience or design of similar structures, systems or components.

As-built means the physical properties of a structure, system, or component following the completion of its installation or construction activities at its final location at the plant site. In cases where it is technically justifiable, determination of physical properties of the as-built structure, system, or component may be based upon measurements, inspections, or tests that occur prior to installation, provided that subsequent fabrication, handling, installation, and testing do not alter the properties.

ASME Code means Section III of the American Society of Mechanical Engineers (ASME) Boiler and Pressure Vessel Code, unless a different Section of the ASME Code (such as Section XI) or a separate ASME Code (such as the ASME Code for Operation and Maintenance of Nuclear Power Plants (OM Code)) is specifically referenced.

ASME Code Data Report means a document, which certifies that a component or system was constructed in accordance with the requirements of the ASME Code. This data report shall be recorded on a form approved by the ASME.

Basic Configuration (for a Building) means the arrangement of building features (e.g., floors, ceilings, walls, basemat and doorways) and of the structures, systems, or components within, as specified in the building Design Description.

Channel means an arrangement of components and modules are required to generate a single protective action signal when required by a plant condition. A channel loses its identity where single protective action signals are combined.

Component, as used for reference to ASME Code components, means a vessel, concrete containment, pump, pressure relief valve, line valve, storage tank, piping system, or core support structure that is designed, constructed, and stamped in accordance with the rules of the ASME Code. It should be noted that ASME Code Section III classifies metal containment as a vessel.

Design Commitment means that portion of the Design Description that is verified by ITAAC.

Design Description means that portion of the design that is certified.

Division (for electrical systems) is the designation applied to a given safety-related system or set of components which are physically, electrically, and functionally independent from other redundant sets of components.

Division (for mechanical systems or equipment) is the designation applied to a specific set of safety-related components within a system.

Exist, Exists or Existence, when used in the Acceptance Criteria, means that the item is installed in its required location and meets the design description. Detailed supporting information on what should be present to conclude that an item "exists" and meets the design description is contained in the appropriate sections of Tier 2 of the DCD.**Functional Arrangement (for a System)** means the physical arrangement of systems and components to provide the service for which the system is intended, and which is described in the system Design Description.

Inspect or Inspection mean visual observations, physical examinations, or reviews of records based on visual observation or physical examination that compare the structure, system, or component condition to one or more Design Commitments. Examples include walkdowns, configuration checks, measurements of dimensions, or non-destructive examinations.

Inspect for Retrievability means to visually observe that the specified information appears on a monitor, display, or alarm when summoned by the operator.

Operate means the actuation and running of equipment.

Qualified for Harsh Environment means that equipment can withstand the environmental conditions that would exist before, during, and following a design basis accident without loss of its safety function, for the time required to perform the safety function. These environmental conditions include applicable time-dependent temperature and pressure profiles, humidity, chemical effects, radiation, aging, submergence, and their synergistic effects which have a significant effect on the equipment performance. Equipment identified in the Design Description as being Qualified for Harsh Environment includes the:

a. equipment itself

b. sensors, switches and lubricants that are an integral part of the equipment

c. electrical components connected to the equipment (wiring, cabling and terminations)

Items b and c are Qualified for Harsh Environment only when they are necessary to support operation of the equipment to meet its safety-related function listed in the Design Description and to the extent such equipment is located in a harsh environment during or following a design basis accident.

Reconciliation or Reconciled means the identification, assessment, and disposition of differences between the design feature as described in the plant-specific DCD and the as-built plant design feature. For ASME Code piping systems, it is the reconciliation of differences between the approved design and the as-built piping system. For structural features, it is the reconciliation of differences between the approved design and the as-built structural feature.

Test means the actuation or operation, or establishment of specified conditions, to evaluate the performance or integrity of as-built structures, systems, or components, unless explicitly stated otherwise.

Type Test means a test on one or more sample components of the same type and manufacturer to qualify other components of that same type and manufacturer. A type test is not necessarily a test of the as-built structures, systems or components.

1.2 General Provisions

The following general provisions are applicable to the Design Descriptions and the associated ITAAC:

1.2.1 Treatment of Individual Items

The absence of any discussion or depiction of an item in the Design Description or accompanying Figures shall not be construed as prohibiting a licensee from utilizing such an item, unless it would prevent an item from performing its safety function as discussed or depicted in the Design Description or accompanying Figures.

When the term "operate", "operates", or "operation" is used with respect to an item discussed in the Acceptance Criteria, it refers to the actuation and running of the item.

Many of the Acceptance Criteria include the words "A report exists and concludes that…" When these words are used, it indicates that the ITAAC for that Design Commitment will be met when it is confirmed that appropriate documentation exists and the documentation shows that the Design Commitment is met. Appropriate documentation can be a single document or a collection of documents that show that the stated acceptance criteria are met. Examples of appropriate documentation include data reports, test reports, inspection reports, analysis reports, evaluation reports, design and manufacturing procedures, certified data sheets, commercial dedication procedures and records, quality assurance records, calculation notes, and equipment qualification data packages.

When the Design Commitment or ITAAC provides that some thing or some activities must comply with ASME Code Section III, ASME Code Section XI, or the ASME OM Code, this means compliance with the ASME Code, as incorporated by reference in 10 CFR 50.55a with specific conditions, or in accordance with relief granted by the NRC or alternatives authorized by the NRC pursuant to 10 CFR 50.55a.

Item numbers are used to identify structures, systems and components in Tier 1 tables, figures, and text and are not representative of an actual equipment or tag numbers.

1.2.2 Implementation of ITAAC

The ITAAC are provided in tables with the following three column format:

Design Commitment	Inspection, Tests, Analyses	Acceptance Criteria

Each Design Commitment in the left-hand column of the ITAAC tables has an associated Inspections, Tests, or Analyses (ITA) requirement specified in the middle column of the tables.

The identification of a separate ITA entry for each Design Commitment shall not be construed to require that separate inspections, tests, or analyses must be performed for each Design Commitment. Instead, the activities associated with more than one ITA entry may be combined, and a single inspection, test, or analysis may be sufficient to implement more than one ITA entry.

An ITA may be performed by the licensee of the plant, or by its authorized vendors, contractors, or consultants. Furthermore, an ITA may be performed by more than a single individual or group, may be implemented through discrete activities separated by time, and may be performed at any time prior to fuel load (including before issuance of the Combined License for those ITAAC that do not necessarily pertain to as-built equipment). Additionally, an ITA may be performed as part of the activities that are required to be performed under 10 CFR Part 50 (including, for example, the Quality Assurance (QA) program required under Appendix B to Part 50); therefore, an ITA need not be performed as a separate or discrete activity.

Each ITA has an associated Acceptance Criteria in the third column of the tables that demonstrate that the Design Commitment in the first column has been met.

1.2.3 System Design Description Discussion of Matters Related to Operations

In some cases, the Design Descriptions in this document refer to matters that relate to operation, such as normal valve or breaker alignment during normal operation modes. Such discussions are provided solely to place the Design Description provisions in context (e.g., to explain automatic features for opening or closing valves or breakers upon off-normal conditions). Such discussions shall not be construed as requiring operators during operation to take any particular action (e.g., to maintain valves or breakers in a particular position during normal operation).

1.2.4 Interpretation of Figures

In many but not all cases, the Design Descriptions in Section 2 include one or more Figures. The Figures may represent a functional diagram, general structural representation, or other general illustration. For instrumentation and control (I&C) systems, Figures also represent aspects of the relevant logic of the system or part of the system. Unless specified explicitly, the Figures are not indicative of the scale, location, dimensions, shape, or spatial relationships of as-built structures, systems, and components. In particular, the as-built attributes of structures, systems, and components may vary from the attributes depicted on the Figures, provided that those safety functions discussed in the Design Description pertaining to the Figure are not adversely affected.

1.2.5 Rated Reactor Core Thermal Power

The rated reactor core thermal power for the APR1400 certified design is 3,983 megawatts thermal (MWt).

1.2.6 Fuel Assembly Design

The fuel assembly is designed to ensure that possible fuel damage would not result in the release of radioactive materials in excess of prescribed limits. The fuel assembly is comprised of fuel rods, grids, guide tubes, top and bottom nozzles, and holddown springs. The fuel assembly design utilized in the APR1400 shall be approved by the NRC for the reactor design.

1.3 Figure Legend, Acronym and Abbreviation List

The conventions presented in this section are employed for figures used in the Design Descriptions. The acronyms and abbreviations presented in this section are used in the Design Control Document (DCD). The figure legend and acronym and abbreviation list are part of the Tier 1 DCD.

INSTRUMENTATION

FLOW INSTRUMENT	F
TEMPERATURE INSTRUMENT	T
RADIATION INSTRUMENT	R
DIFFERENTIAL PRESSURE INSTRUMENT	PD
PRESSURE INSTRUMENT	P
LEVEL INSTRUMENT	L
CURRENT (ELECTRIC) INSTRUMENT	I
MOISTURE OR HUMIDITY DETECTOR	M
ULTRASONIC INSTRUMENT	U
SMOKE DETECTOR	XS
SPEED INSTRUMENT	S
ANALYZER	A
ALARM	A

Figure 1.3-1 Figure Legend of the Instrumentation

VALVES

GATE

GLOBE

CHECK

BUTTERFLY

BALL

PLUG

RELIEF

THREE WAY)

PILOT OPERATED
SAFETY RELIEF

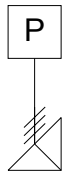

POST INDICATOR

VALVE TYPE
NOT SPECIFIED

Figure 1.3-2 Figure Legend of the Valves

VALVE OPERATORS

OPERATOR OF
UNSPECIFIED TYPE

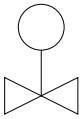

MOTOR OPERATOR

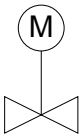

SOLENOID OPERATOR

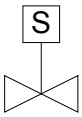

HYDRAULIC OPERATOR

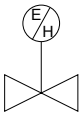

PNEUMATIC OPERATOR
(CYLINDER)

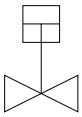

PNEUMATIC OPERATOR
(DIAPHRAGM)

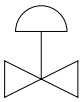

Figure 1.3-3 Figure Legend of the Valve Operators

FAIL POSITION INDICATIONS FOR VALVES

FAIL LOCKED IN PLACE	FL
FAILS CLOSED	FC
FAILS OPEN	FO

MECHANICAL EQUIPMENT

POSITIVE DISPLACEMENT PUMP

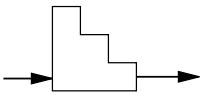

CENTRIFUGAL PUMP

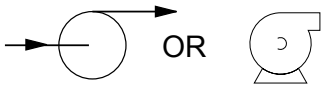

PUMP TYPE NOT SPECIFIED

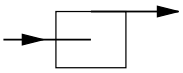

HEADER

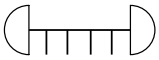

TANK

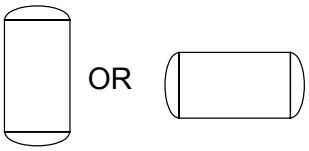

FILTER

STRAINER

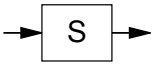

Figure 1.3-4 Figure Legend of the Valve Position and the Mechanical Equipment

FLEXIBLE CONNECTION

DELAY COIL

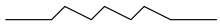

RESTRICTING ORIFICE

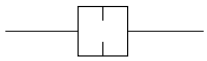

FLOW MEASURING ORIFICE

FLOW ELEMENT (VENTURI)

CENTRIFUGAL FAN, BLOWER OR COMPRESSOR

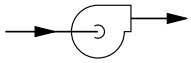

SPRAY NOZZLE

OR

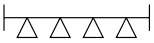

VANEAXIAL FAN

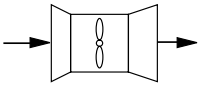

HEAT EXCHANGER

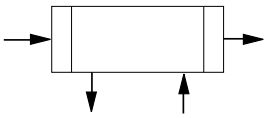

Figure 1.3-5 Figure Legend of the Mechanical Equipment (1 of 2)

HEATING COIL

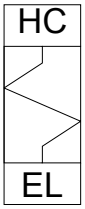

COOLING COIL

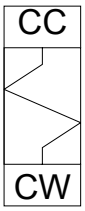

HUMIDIFIER

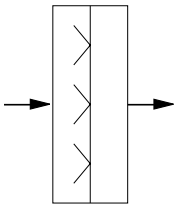

IMMERSION HEATER OR COOLER

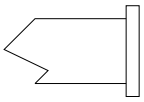

VACUUM BREAKER

VENT ATMOSPHERE

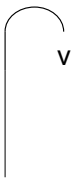

Figure 1.3-5 Figure Legend of the Mechanical Equipment (2 of 2)

HVAC FILTERS AND DAMPERS

MEDIUM EFFICIENCY FILTER

HIGH EFFICIENCY
PARTICULATE AIR (HEPA) FILTER

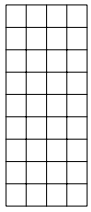

CARBON ADSORBER

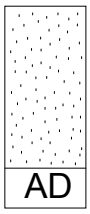

MOISTURE SEPARATOR

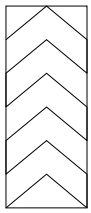

POST FILTER

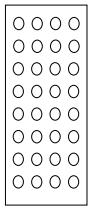

Figure 1.3-6 Figure Legend of the HVAC Filters and Dampers (1 of 2)

HVAC FILTERS AND DAMPERS

NORMALLY OPEN DAMPER
(PNEUMATIC OPERATED)

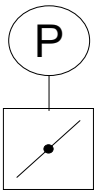

NORMALLY CLOSED DAMPER
(PNEUMATIC OPERATED)

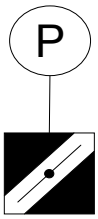

NORMALLY OPEN DAMPER
(ELECTRO-HYDRAULIC OPERATED)

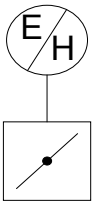

NORMALLY CLOSED DAMPER
(ELECTRO-HYDRAULIC OPERATED)

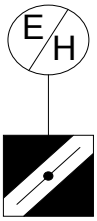

CHECK DAMPER

TORNADO DAMPER

Figure 1.3-6 Figure Legend of the HVAC Filters and Dampers (2 of 2)

PUMP DRIVERS

TURBINE DRIVE

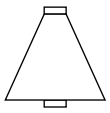

ELECTRICAL EQUIPMENT

BATTERY

CIRCUIT BREAKER

DISCONNECT SWITCH

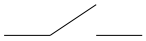

VOLTAGE REGULATOR

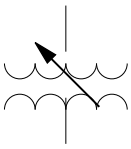

ISOLATION

TRANSFORMER

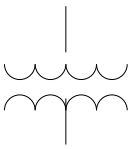

Figure 1.3-7 Figure Legend of the Dampers and the Electrical Equipment

MISCELLANEOUS

A SYSTEM OR COMPONENT THAT IS NOT PART OF THE DEFINED SYSTEM

CONTAINMENT

CONTAINMENT PENETRATION

BUILDING SEPARATION

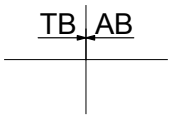

ASME CODE CLASS BREAK

A ASME CODE CLASS BREAK IS IDENTIFIED BY A SINGLE LINE TO THE DESIGNATED LOCATION FOR THE CLASS BREAK, AS SHOWN IN THE EXAMPLE BELOW.

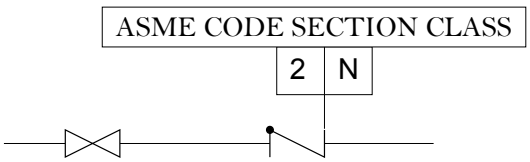

(NOTE1)

NOTES :

1. THE HEADER, "ASME CODE SECTION CLASS", MUST APPEAR AT LEAST ONCE ON EACH FIGURE ON WHICH ASME CODE SECTION CLASS BREAKS ARE SHOWN, BUT NEED NOT APPEAR AT EVERY CLASS BREAK SHOWN ON A FIGURE.

   N INDICATES NON-ASME CODE SECTION CLASS

Figure 1.3-8 Figure Legend of the Miscellaneous

2.0 Design Description and ITAAC

2.1 Site Parameters

This section provides the major site parameters postulated for the Certified Design. These site parameters are applied for the design of the SSCs important to safety of the Certified Design.

2.1.1 Design Description

The site characteristics of the actual site for the Certified Design will be bounded by the postulated site parameters identified in Table 2.1-1. In case of deviation, the COL applicant is to justify that the facilities installed at the actual site will be acceptable regardless of site-specific parameters which may fall outside the postulated site parameters.

2.1.2 Inspections, Tests, Analyses, and Acceptance Criteria

This section contains no ITAAC.

Table 2.1-1 (1 of 4)

Site Parameters

Ground Water	
Maximum Elevation of Groundwater	0.61 m (2 feet) below plant grade [(1)] in the vicinity of the SSCs important to safety
Flood (or Tsunami) Level	
Maximum Flood Elevation	0.30 m (1 foot) below plant grade in the vicinity of the SSCs important to safety
Precipitation	
Maximum Precipitation Rate [1 mi^2] 100-Year Snowpack Roof Load Extreme Winter Precipitation Roof Load Depth of 48-Hour Probable Maximum Winter Precipitation (PMWP)	- 492.7 mm (19.4 in.) over 1-hour - 157.5 mm (6.2 in.) in 5 minutes - 2.873 kPa (60 lbf/ft^2) - 5.985 kPa (125 lbf/ft^2) - 914.4 mm (36 in.)
Design Ambient Temperatures [(5)]	
HVAC Outdoor Design Temperature - 5% annual exceedance values · Maximum · Minimum	 35.0°C (95°F) dry bulb and 25.0°C (77°F) coincident wet bulb -20.6°C (-5°F) dry bulb
- 1% annual Exceedance Values · Maximum · Minimum	 37.8°C (100°F) dry bulb and 25.0°C (77°F) coincident wet bulb -23.3°C (-10°F) dry bulb
- 0% annual Exceedance Values (historical limit excluding peaks < 2 hours) · Maximum · Minimum	 46.1°C (115°F) dry bulb and 26.7°C (80°F) coincident wet bulb -40.0°C (-40°F) dry bulb
Ambient Design Temperature for Cooling Tower - Ambient 5 % annual Exceedance Values for CWS · Maximum · Minimum - Ambient 0 % (historical limit excluding peaks < 2 hours) annual Exceedance Values for ESWS · Maximum · Minimum	 26.1°C (79°F) non-coincidentwet bulb -20.6°C (-5°F) dry bulb 27.2°C (81°F) non-coincident wet bulb -40.0°C (-40°F) dry bulb

Table 2.1-1 (2 of 4)

Extreme Wind	
50-Year 3-Second Wind Gust Speed	64.8 m/s (145 mph); exposure category C
Importance Factor	1.15 (2)
Tornado Parameters	
Maximum Wind Speed	102.8 m/s (230 mph)
Translational Speed	20.6 m/s (46 mph)
Maximum Rotational Speed	82.2 m/s (184 mph)
Radius of Maximum Rotational Speed	45.7 m (150 feet)
Pressure Drop	8.274 kPa (1.2 psi)
Rate of Pressure Drop	3.447 kPa/s (0.5 psi/s)
Missile Spectrum	Table 2 (Region I) of NRC RG 1.76 (2007)
Hurricane Parameters	
Maximum Wind Speed	116 m/s (260 mph)
Missile Spectrum	Table 1 of NRC RG 1.221 (2011)
Soil Properties	
Allowable Static Bearing Capacity for Seismic Category I Structures (Dead and Live Load)	The allowable static bearing capacity, including a factor of safety appropriate for the design load combinations, shall be greater than or equal to the maximum static bearing demand of 957.6 kPa (20 ksf). The allowable static bearing capacity is the value of ultimate bearing capacity divided by 3.0.
Allowable Dynamic Bearing Capacity for Seismic Category I Structures (Design Load Combination including SSE Load)	The allowable dynamic bearing capacity, including a factor of safety appropriate for the design load combinations, shall be greater than or equal to the maximum dynamic bearing demand of 2,872.8 kPa (60 ksf). The allowable dynamic bearing capacity is the value of ultimate bearing capacity divided by 2.0.
Minimum Factor of Safety for Slope on Static Condition	1.5
Minimum Factor of Safety for Slope on Dynamic Condition (SSE)	1.2
Minimum Shear Wave Velocity	304.8 m/s (1,000 ft/sec)
Maximum Dip Angle for Soil Uniformity	20 degrees
Liquefaction Potential	See Tier 2 Subsection 2.5.4.8

Table 2.1-1 (3 of 4)

Soil Properties (cont.)	
Maximum Allowable Differential Settlement inside Building	12.7 mm (0.5 in.) per 15.24 m (50 ft) in any direction for all seismic Category I structures under static load.
Maximum Allowable Differential Settlement between Buildings	76.2 mm (3.0 in.) between NI and EDGB, NI and DFOT, EDGB and DFOT under static load.
Minimum Soil Angle of Internal Friction	Greater than or equal to 35 degrees below the footprint of the seismic Category I structures at their excavation depth
Slope Failure Potential (Yes/No)	No
Tectonic and Non-tectonic Surface Deformation Potential	See Tier 2 Subsection 2.5.3
Backfill Material Density	137 pcf
Backfill Material Dynamic Poisson's Ratio	0.33
Backfill Material Dynamic Properties (Normalized Minimum Shear Moduli & Maximum Damping) (6)	Shear Strain (%) / G/G_{max} / Damping (%) 1.0 / 0.05 / 24.0 0.1 / 0.22 / 16.0 0.01 / 0.54 / 6.0 0.001 / 0.85 / 2.0 0.0001 / 1.00 / 1.0
Strain-compatible Minimum Shear-wave velocity of Backfill	510 fps

Table 2.1-1 (4 of 4)

Seismology	
Safe Shutdown Earthquake (SSE)	0.3 g peak ground acceleration
Certified Seismic Design Response Spectra (CSDRS) Referencing SSE	See Figures 2.1-1 and 2.1-2
Hard Rock High Frequency (HRHF) Response Spectra (4)	0.46 g peak ground acceleration See Figures 2.1-3 and 2.1-4
Atmospheric Dispersion Meteorology	
Accident Release χ/Q Value at EAB · 0-2 hr	 1.00×10^{-3} s/m^3
Accident Release χ/Q Values at LPZ · 0-8 hr · 8-24 hr · 24-96 hr · 96-720 hr	 2.20×10^{-4} s/m^3 1.60×10^{-4} s/m^3 1.00×10^{-4} s/m^3 8.00×10^{-5} s/m^3
Annual Average χ/Q Values at Site Boundary · Undepleted/No Decay · Undepleted/2.26-Day Decay · Depleted/8.00-Day Decay · Relative Deposition Factor (D/Q)	 2.00×10^{-5} s/m^3 1.99×10^{-5} s/m^3 1.84×10^{-5} s/m^3 2.00×10^{-7} l/m^2
Control Room, Technical Support Center, and Auxiliary Building Atmospheric Dispersion Factors (χ/Qs)	See Tier 2, Table 2.3-2 through Table 2.3-12
Inventory of Radionuclides Which Could Potentially Seep into the Groundwater	See Table 2.1-2

(1) Plant grade represents the level of ground adjacent to the nuclear island buildings and is established plant elevation of 98 ft 8 in.
(2) 100-year recurrence interval; value to be used for design of seismic Category I and II structures only.
(3) Bearing capacity is defined at the foundation level of the seismic Category I Structures.
(4) The HRHF response spectra are provided for evaluation of site-specific ground motion response spectra which exceed the CSDRS in the high frequency range at hard rock sites.
(5) Degrees Fahrenheit (°F) are the main units and temperatures in Celsius (°C) are reference values that are converted from main units.
(6) The backfill material dynamic properties are used to calculate the shear strain-compatible shear wave velocity profiles for the backfill. The strain-compatible damping values of the backfill cannot be greater than 15%.

Table 2.1-2 (1 of 2)

Inventory of Radionuclides Which Could Potentially Seep into the Groundwater

Nuclide	Holdup Tank (Bq)	Holdup Tank [1] (Bq/cc)
Br 84	1.40E+05	8.81E-05
I 131	3.60E+07	2.26E-02
I 132	2.60E+06	1.64E-03
I 133	2.20E+07	1.38E-02
I 134	1.50E+06	9.43E-04
I 135	9.20E+06	5.79E-03
Rb 88	4.50E+06	2.83E-03
Cs 134	1.40E+06	8.81E-04
Cs 136	1.50E+07	9.43E-03
Cs 137	2.10E+06	1.32E-03
Na 24	3.50E+07	2.20E-02
Cr 51	1.50E+08	9.43E-02
Mn 54	1.30E+08	8.18E-02
Fe 55	1.00E+08	6.29E-02
Fe 59	1.80E+07	1.13E-02
Co 58	3.10E+08	1.95E-01
Co 60	4.70E+07	2.96E-02
Zn 65	4.20E+07	2.64E-02
Sr 89	8.70E+06	5.47E-03
Sr 90	1.10E+06	6.92E-04
Sr 91	4.10E+05	2.58E-04
Y 91m	7.50E+06	4.72E-03
Y 91	3.20E+07	2.01E-02
Y 93	8.20E+08	5.16E-01
Zr 95	2.60E+07	1.64E-02
Nb 95	1.50E+07	9.43E-03
Mo 99	3.60E+07	2.26E-02
Tc 99m	1.10E+06	6.92E-04
Ru 103	4.30E+08	2.70E-01

Table 2.1-2 (2 of 2)

Nuclide	Holdup Tank (Bq)	Holdup Tank (1) (Bq/cc)
Ru 106	7.60E+09	4.78E+00
Ag 110m	1.10E+08	6.92E-02
Te 129m	9.40E+06	5.91E-03
Te 129	4.70E+05	2.96E-04
Te 131m	2.00E+06	1.26E-03
Te 131	5.30E+04	3.33E-05
Te 132	9.80E+06	6.16E-03
Ba 137m	2.10E+06	1.32E-03
Ba 140	3.80E+08	2.39E-01
La 140	7.10E+07	4.47E-02
Ce 141	7.90E+06	4.97E-03
Ce 143	6.00E+06	3.77E-03
Ce 144	3.30E+08	2.08E-01
W 187	3.50E+06	2.20E-03
Np 239	9.80E+06	6.16E-03
H-3	7.20E+12	4.53E+03

(1) Volume of the holdup tank is 420,000 gal.

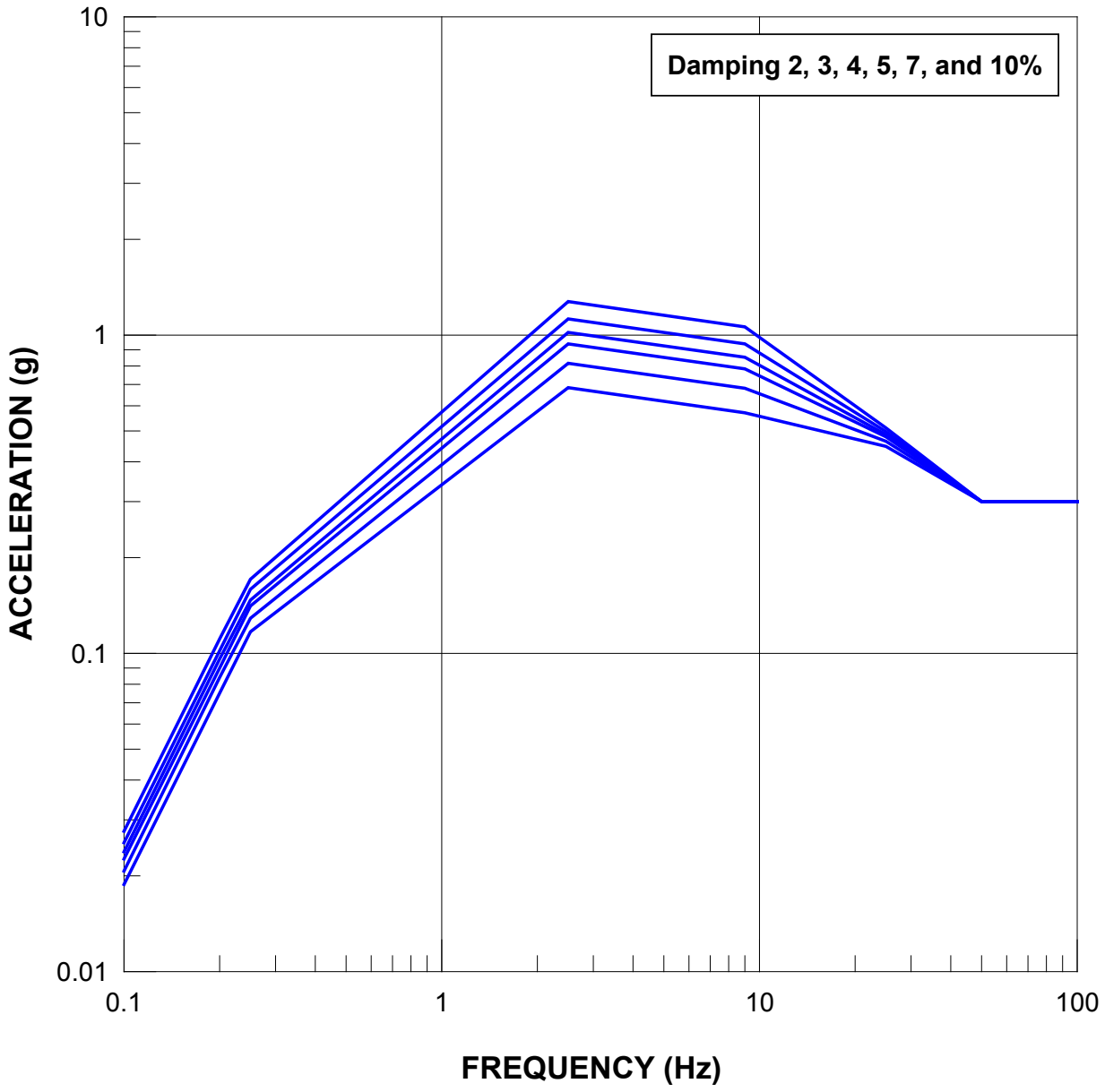

Figure 2.1-1 Horizontal Certified Seismic Design Response Spectra

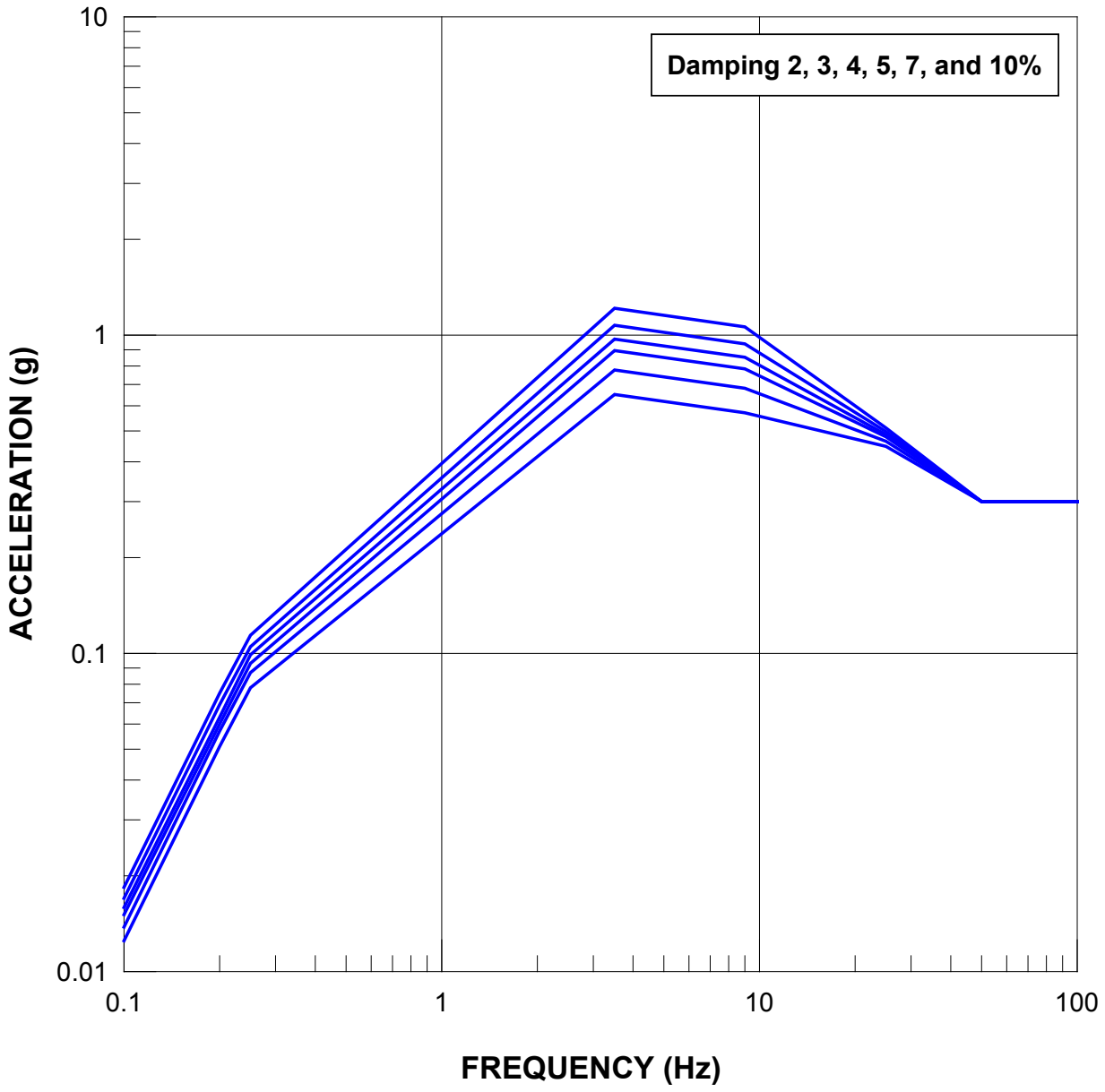

Figure 2.1-2 Vertical Certified Seismic Design Response Spectra

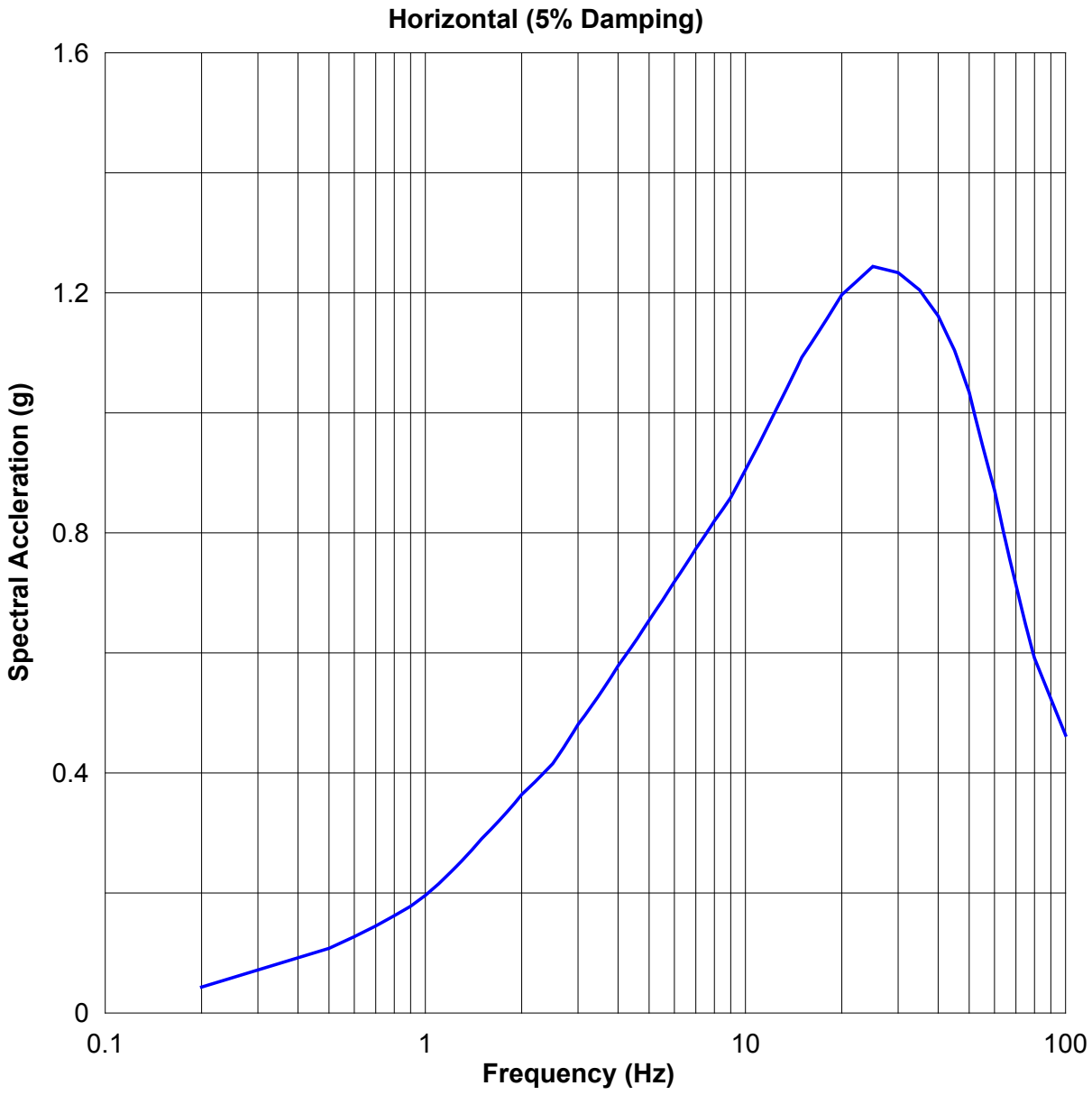

Figure 2.1-3 Horizontal HRHF Response Spectra

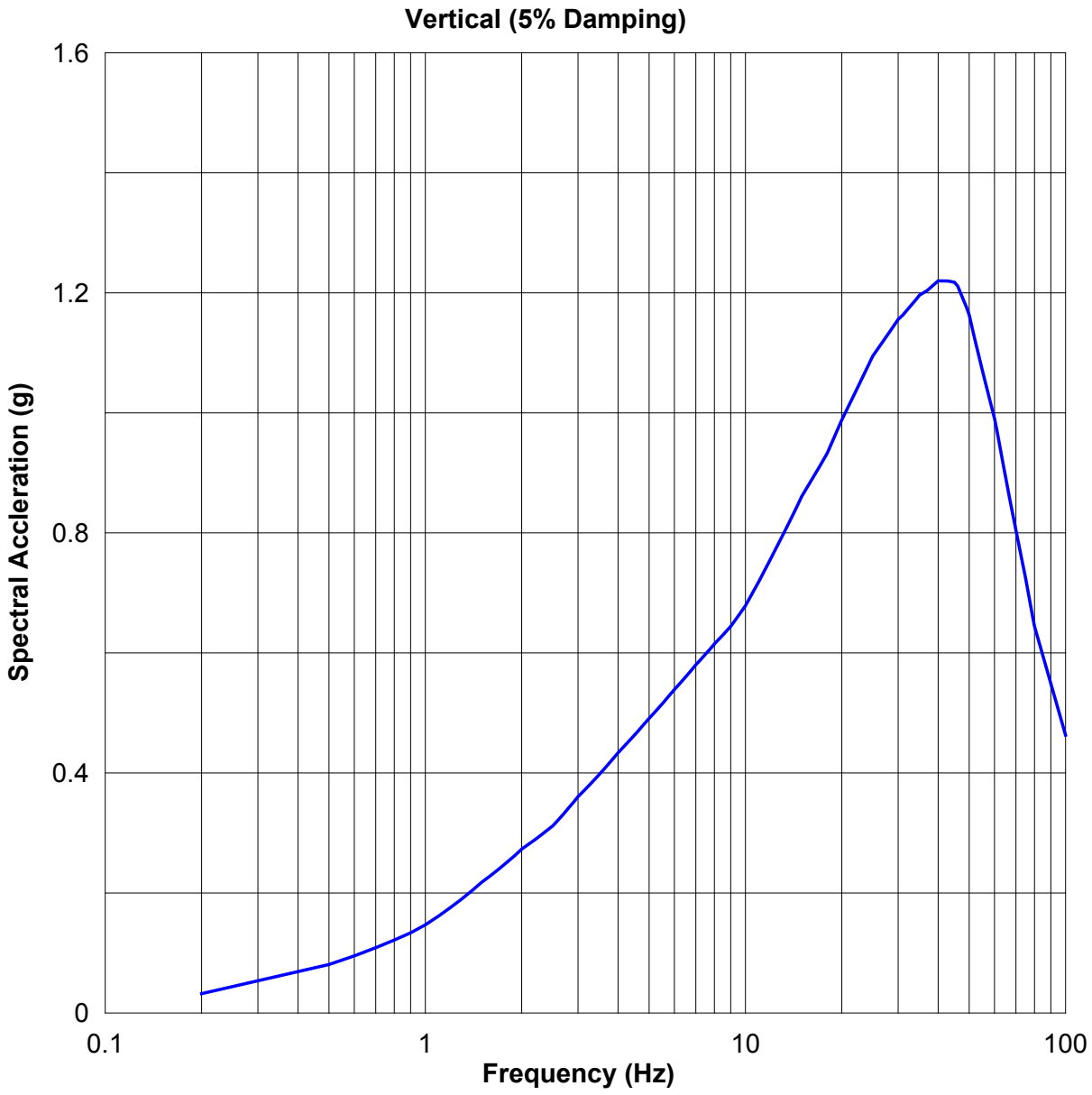

Figure 2.1-4 Vertical HRHF Response Spectra

2.2 Structural and System Engineering

This section provides discussions on building structures and structural aspects of major components. The nuclear island (NI) structures, emergency diesel generator building, turbine generator building, compound building and structural aspects of reactor pressure vessel and in-core instrument guide tube system are discussed. In addition, the protection against internal and external hazards is discussed.

2.2.1 Nuclear Island Structures

2.2.1.1 Design Description

The NI structures house, protect, and support plant equipment and provide personnel and equipment access, support for systems and components under operating loads, radiation shielding, structural components to withstand loads due to design basis external and internal events, physical separation between divisions of safety-related equipment, and barriers to minimize or prevent the release of radioactive materials. The NI structures are safety-related structures that consist of the reactor containment building (RCB) and the auxiliary building (AB). The NI structures are designed to withstand the effect of an aircraft impact.

The RCB and AB are structurally separated but founded on a common reinforced concrete basemat which is embedded below the finished plant grade level. The plant grade level is established at a plant elevation of 98 ft 8 in.

The RCB structure is composed of a prestressed concrete containment, and reinforced concrete internal structures with steel structures.

The containment is a steel lined prestressed concrete structure which consists of a right cylinder with a hemispherical dome on the reinforced concrete common basemat. The cylinder and dome of the containment is prestressed by a post-tensioning system consisting of horizontal and inverted "U" vertical tendons. There are three buttresses equally spaced around the cylinder to anchor horizontal tendon. There is no structural connection between free standing portion of the containment and adjacent structures other than penetrations and their supports. The containment retains its integrity at pressure and temperature conditions associated with the most limiting design basis accident without exceeding the design leakage rate. Access to the containment is provided through

personnel air locks and an equipment hatch. Penetrations are provided for electrical and mechanical components and for the transport of nuclear fuel.

The containment internal structures consist of reinforced concrete and structural steels that support reactor vessel and reactor coolant system. The primary shield wall supports and laterally surrounds the reactor vessel. The secondary shield wall laterally surrounds the primary shield wall and is structurally connected to the primary shield wall by reinforced concrete slabs, beams, and walls. The secondary shield wall supports steam generators and pressurizer. The containment internal structures enclose a reactor cavity area below the reactor vessel which can be flooded during a postulated accident. An indirect gas vent path is provided between the reactor cavity and the free volume of the containment.

The reactor cavity has a corium debris chamber. And the reactor cavity floor is constructed with a fill concrete on steel liner plate. The reactor cavity floor area is free from obstructions to corium debris spreading.

The AB is a reinforced concrete structure which consists of the electrical and control area, the fuel handling area, the chemical and volume control system area, the main steam valve house, and the emergency diesel generator area. The AB laterally surrounds the RCB and is divided by divisional walls.

The NI structures are designed in accordance with the requirements of ASME Section III Div. 2 CC, ASME Section III Div. 1 NE, ACI 349 and ANSI/AISC N690 as described in Table 2.2.1-6.

The tolerances for the dimensions in Table 2.2.1-1 and Figure 2.2.1-1 through 2.2.1-13 shall be in accordance with ACI 117(2010 edition) for concrete structures, ANSI/AISC 303(2010 edition) for structural steel members/structures, and ASME Section III, Div. 2, Subsection CC & applicable appendices related to tolerances (2001 edition with 2003 Addenda) for containment. Any provisions in these codes which provide acceptance criteria for conditions when tolerances are exceeded shall not apply, but a licensee referencing the APR1400 DCD may deviate from the tolerances in these codes using altermative acceptance criteria, if these acceptance criteria are approved by the NRC. As-built dimensions will also be evaluated to verify compliance with the design bases and applicable codes and standards identified in Table 2.2.1-6.

The NI structures, including the critical sections and design attributes listed in Table 2.2.1-5, are seismic Category I, and are designed and constructed to withstand the design basis loads associated with:

1. Normal plant operation (including dead loads, live loads, lateral earth pressure loads, hydrodynamic loads, and equipment loads, including the effects of temperature and equipment vibration)

2. External events (including rain, snow, wind, flood, tornado or hurricane, tornado or hurricane generated missiles, and earthquake)

3. Internal events (including flooding, pipe rupture, equipment failure, and equipment failure generated missile)

Seismic classification of the building is shown in Table 2.2.1-4.

1. The basic configuration of the NI structure is as shown in Figure 2.2.1-1 through Figure 2.2.1-13.

2.a The containment, except the steel portions of the containment not backed by concrete, is designed and constructed in accordance with ASME Section III, Div. 2 requirements.

2.b The containment penetrations are designed and constructed to meet ASME Section III, Div. 1 (portions not backed by concrete) and Div. 2 (portions backed by concrete).

2.c The containment and its penetrations retain their pressure boundary integrity associated with the design pressure.

2.d The containment and its penetrations maintain the containment leakage rate less than or equal to the maximum allowable leakage rate associated with the peak containment pressure for the design basis accident in accordance with 10 CFR Part 50, Appendix J.

3. The NI structures are seismic Category I, and are designed and constructed to withstand the design basis loads.

4. The dimensions and elevations of the NI structures are as described in Table 2.2.1-1 and Figures 2.2.1-1 through 2.2.1-13.

5. Nuclear Island (NI) Structures are designed constructed in accordance with the codes and standards listed in Table 2.2.1-6.

6. The critical sections and design attributes of the NI structures are in accordance with Table 2.2.1-5.

2.2.1.2 Inspections, Tests, Analyses, and Acceptance Criteria

The inspections, tests, analyses, and associated acceptance criteria for nuclear island structures are specified in Table 2.2.1-3.

Table 2.2.1-1 (1 of 32)

Definition of Wall and Floor Thicknesses for Nuclear Island Structure

Wall or Section Description	Column Lines	Floor Elevation or Elevation Range	Concrete Thickness	Applicable Radiation Shielding Wall (Yes/No)
Reactor Containment Building				
Containment Structures				
Cylindrical Shell	Not Applicable	From 78'-0" to 254'-6"	4'-6"	Yes
Hemispherical Dome	Not Applicable	From 254'-6" to 333'-6"	4'-0"	Yes
Common Basemat	N-S direction portion within 18'-9" from the center of RCB	From 55'-0" to 66'-0"	11'-0" (1)	No
	E-W direction portion within 21'-1"(East) or 40'-7"(West) from the center of RCB	From 55'-0" to 66'-0"	11'-0" (1)	No
	N-S direction portion from 18'-9" to 42'-6" from the center of RCB	From 55'-0" to 78'-0"	23'-0" (1)	No
	East direction portion from 21'-1" to 42'-6" from the center of RCB	From 55'-0" to 76'-0"	21'-0" (1)	No
	West direction portion from 40'-7" to 42'-6" from the center of RCB	From 55'-0" to 78'-0"	23'-0" (1)	No
	N-S direction portion from 42'-6" to 84'-0" from the center of RCB	From 45'-0" to 78'-0"	33'-0" (1)	No
	E-W direction portion from 42'-6" to 84'-0" from the center of RCB	From 45'-0" to 78'-0"	33'-0" (1)	No

Table 2.2.1-1 (2 of 32)

Wall or Section Description	Column Lines	Floor Elevation or Elevation Range	Concrete Thickness	Applicable Radiation Shielding Wall (Yes/No)
Containment Internal Structure				
Primary Shield Wall	Not Applicable	From 69'-0" to 94'-3 1/2"	12'-10 3/4"(East), 9'-8 5/8"(North/South), 6'-7"(West)	Yes
		From 94'-3 1/2" to 114'-6"	9'-1"(East), 6'-9"(North/South), 6'-7"(West)	Yes
		From 114'-6" to 130'-0"	6'-9"(North/South), 6'-7"(East/West)	Yes
Secondary Shield Wall	Not Applicable	From 100'-0" to 156'-0"	4'-0"	Yes
Fill Slab	Not Applicable	From 66'-0" to 69'-0" From 78'-0 to 81'-0" From 78'-0 to 100'-0" From 76-0 to 80'-0"	3'-0" 3'-0" 22'-0" 4'-0"	No
IRWST Wall	Not Applicable	From 81'-0" to 97'-0"	3'-0"	No
IRWST Slab	Not Applicable	From 97'-0" to 100'-0"	3'-0"	No
Refueling Pool Wall	E-W direction	From 130'-0"to 156'-0"	6'-2"	Yes
	N-S direction	From 130'-0" to 156'-0"	5'-0"(West), 6'-0"(East)	Yes
Refueling Pool Slab	Not Applicable	From 126'-0" to 130'-0" From 107'-6" to 114'-6"	4'-0" 7'-0"	No No
Hold-up Volume Tank Wall	Not Applicable	From 80'-0" to 100'-0"	6'-2"(North/South)	No

Table 2.2.1-1 (3 of 32)

Wall or Section Description	Column Lines	Floor Elevation or Elevation Range	Concrete Thickness	Applicable Radiation Shielding Wall (Yes/No)
Containment Internal Structure				
Steam Generator Compartment Wall	Not Applicable	From 156'-0" to 186'-11" From 156'-0" to 191'-0"	4'-0"(Circular), 4'-1 3/" to 5'-0"(straight)	Yes
Floors	Not Applicable	From 112'-0" to 114'-0" From 134'-6" to 136'-6" From 133'-6" to 136'-6" From 154'-0" to 156'-0" From 153'-0" to 156'-0" From 152'-0" to 156'-0"	2'-0" 2'-0" 3'-0" 2'-0" 3'-0" 4'-0"	No
Auxiliary Building				
Common basemat	Not Applicable	45'-0" & 55'-0"	10'-0"	No
Column Line 12 Wall	From AA to AK	From 55'-0" to 156'-0"	4'-0"	Yes
Column Line 12 Wall	From AA to AK	From 156'-0" to 195'-0"	3'-0"	Yes
Column Line 13 Wall	From AA to AC From AI to AK	From 120'-0" to 137'-6"	2'-6"	No
Column Line 13 Wall	From AE to AG	From 174'-0" to 195'-0"	3'-0"	No
Column Line 14 Wall	From AA to AK	From 55'-0" to 213'-0"	3'-0"	Yes
Column Line 15 Wall	From AA to AK	From 55'-0" to 156'-0"	4'-0"	Yes
Column Line 15 Wall	From AA to AK	From 156'-0" to 213'-0"	3'-0"	Yes

Table 2.2.1-1 (4 of 32)

Wall or Section Description	Column Lines	Floor Elevation or Elevation Range	Concrete Thickness	Applicable Radiation Shielding Wall (Yes/No)
Column Line 17 Wall	From AB to AD From AH to AJ	From 55'-0" to 156'-0"	4'-0"	Yes
Column Line 17 Wall	From AA to AB From AJ to AK	From 137'-6" to 156'-0"	7'-0"	No
Column Line 17 Wall	From AA to AD From AH to AK	From 156'-0" to 174'-0"	4'-0"	No
Column Line 17 Wall	From AA to AC From AI to AK	From 174'-0" to 195'-0"	3'-0"	No
Column Line 18 Wall	From AC to AD From AH to AI	From 55'-0" to 175'-0"	4'-0"	Yes
Column Line 18 Wall	From AC to AD From AH to AI	From 174'-0" to 195'-0"	3'-0"	No
Column Line 19 Wall	From AA to AD From AH to AK	From 55'-0" to 137'-6"	4'-0"	Yes
Column Line 20 Wall	From AC to AD From AH to AI	From 55'-0" to 175'-0"	4'-0"	Yes
Column Line 20 Wall	From AA to AD From AH to AK	From 137'-6" to 174'-0"	4'-0"	Yes
Column Line 20 Wall	From AH to AK	From 174'-0" to 216'-9"	4'-0"	Yes
Column Line 21 Wall	From AB to AC From AI to AJ	From 55'-0" to 137'-6"	4'-0"	Yes

Table 2.2.1-1 (5 of 32)

Wall or Section Description	Column Lines	Floor Elevation or Elevation Range	Concrete Thickness	Applicable Radiation Shielding Wall (Yes/No)
Column Line 22 Wall	From AB to AC From AI to AJ	From 55'-0" to 226'-6"	2'-3"	Yes
Column Line 22 Wall	From AC to AD From AH to AI	From 55'-0" to 78'-0"	2'-6"	No
Column Line 22 Wall	From AC to AD From AH to AI	From 100'-0" to 137'-6"	4'-0"	Yes
Column Line 23 Wall	From AA to AF From AI to AK	From 55'-0" to 137'-6"	4'-0"	Yes
Column Line 23 Wall	From AF to AI	From 55'-0" to 100'-0"	5'-0"	Yes
Column Line 23 Wall	From AF to AI	From 100'-0" to 156'-0"	7'-0"	Yes
Column Line 23 Wall	From AA to AF	From 137'-6" to 156'-0"	3'-0"	Yes
Column Line 23 Wall	From AI to AJ	From 137'-6" to 156'-0"	4'-0"	No
Column Line 23 Wall	From AF to AK	From 156'-0" to 213'-6"	3'-0"	Yes
Column Line 24 Wall	From AC to AF	From 55'-0" to 78'-0"	3'-0"	Yes
Column Line 24 Wall	From AB to AD	From 78'-0" to 100'-0"	4'-0"	Yes
Column Line 24 Wall	From AD to AF	From 78'-0" to 100'-0"	3'-0"	Yes
Column Line 24 Wall	From AA to AD	From 100'-0" to 156'-0"	3'-0"	Yes
Column Line 24 Wall	From AD to AE	From 100'-0" to 137'-6"	4'-0"	Yes
Column Line 24 Wall	From AE to AF	From 100'-0" to 120'-0"	3'-6"	Yes
Column Line 24.5 Wall	From AF to AI	From 55'-0" to 100'-0"	5'-0"	Yes
Column Line 24.5 Wall	From AF to AI	From 100'-0" to 156'-0"	7'-0"	Yes

Table 2.2.1-1 (6 of 32)

Wall or Section Description	Column Lines	Floor Elevation or Elevation Range	Concrete Thickness	Applicable Radiation Shielding Wall (Yes/No)
Column Line 25 Wall	From AB to AJ	From 55'-0" to 100'-0"	3'-0"	Yes
Column Line 25 Wall	From AD to AF	From 100'-0" to 120'-0"	3'-6"	Yes
Column Line 25 Wall	From AD to AE	From 120'-0" to 137'-6"	3'-6"	Yes
Column Line 25 Wall	From AE to AF	From 120'-0" to 137'-6"	3'-9"	Yes
Column Line 25 Wall	From AD to AE	From 137'-6" to 156'-0"	3'-0"	No
Column Line 26 Wall	From AA to AK	From 55'-0" to 213'-6"	4'-0"	Yes
Column Line AA Wall	From 12 to 17 From 20 to 26	From 55'-0" to 156'-0"	4'-0"	Yes
Column Line AA Wall	From 17 to 20	From 55'-0" to 175'-0"	5'-0"	Yes
Column Line AB Wall	From 12 to 15	From 55'-0" to 100'-0"	3'-0"	Yes
Column Line AB Wall	From 15 to 23	From 55'-0" to 137'-6"	4'-0"	Yes
Column Line AB Wall	From 23 to 26	From 55'-0" to 137'-6"	3'-0"	Yes
Column Line AB Wall	From 22 to 23	From 78'-0" to 156'-0"	3'-6"/3'-0"	Yes
Column Line AB Wall	From 12 to 18	From 137'-6" to 156'-0"	4'-0"	No
Column Line AB Wall	From 12 to 17	From 156'-0" to 195'-0"	3'-0"	Yes
Column Line AB Wall	From 20 to 22	From 137'-6" to 156'-0"	3'-6"	Yes
Column Line AB Wall	From 20 to 22	From 156'-0" to 180'-0"	3'-0"	Yes
Column Line AB Wall	From 22 to 26	From 156'-0" to 174'-0"	2'-0"	Yes

Table 2.2.1-1 (7 of 32)

Wall or Section Description	Column Lines	Floor Elevation or Elevation Range	Concrete Thickness	Applicable Radiation Shielding Wall (Yes/No)
Column Line AC Wall	From 12 to 14	From 55'-0" to 100'-0"	2'-6"	Yes
Column Line AC Wall	From 15 to 26	From 55'-0" to 68'-0"	4'-0"	Yes
Column Line AC Wall	From 15 to 23	From 68'-0" to 137'-6"	4'-0"	Yes
Column Line AC Wall	From 23 to 26	From 100'-0" to 156'-0"	3'-0"	Yes
Column Line AC Wall	From 12 to 14	From 137'-6" to 156'-0"	2'-6"	No
Column Line AC Wall	From 15 to 18	From 137'-6" to 156'-0"	4'-0"	No
Column Line AC Wall	From 20 to 22	From 137'-6" to 169'-6"	3'-0"	Yes
Column Line AC Wall	From 24 to 26	From 137'-6" to 156'-0"	3'-0"	No
Column Line AC Wall	From 15 to 17	From 156'-0" to 195'-0"	3'-0"	No
Column Line AD Wall	From 15 to 17 From 22 to 26	From 55'-0" to 120'-0" From 55'-0" to 100'-0"	3'-0"	Yes
Column Line AD Wall	From 12 to 15	From 78'-0" to 100'-0"	2'-6"	No
Column Line AD Wall	From 22 to 24 From 25 to 26	From 100'-0" to 137'-6"	3'-0"	Yes
Column Line AD Wall	From 24 to 25	From 100'-0" to 137'-6"	3'-6"	Yes
Column Line AD Wall	From 22 to 26	From 137'-6" to 156'-0"	3'-0"	Yes
Column Line AD Wall	From 12 to 15	From 137'-6" to 156'-0"	2'-6"	No
Column Line AD Wall	From 12 to 15	From 156'-0" to 174'-0"	2'-0"	Yes

Table 2.2.1-1 (8 of 32)

Wall or Section Description	Column Lines	Floor Elevation or Elevation Range	Concrete Thickness	Applicable Radiation Shielding Wall (Yes/No)
Column Line AE Wall	From 12 to 15 From 22 to 23	From 55'-0" to 195'-0" From 55'-0" to 156'-0"	3'-0"	Yes
Column Line AE Wall	From 23 to 24	From 100'-0" to 137'-6"	3'-0"	Yes
Column Line AE Wall	From 24 to 25	From 100'-0" to 137'-6"	4'-0"	Yes
Column Line AE Wall	From 23 to 26	From 137'-6" to 156'-0"	3'-0"	Yes
Column Line AF Wall	From 12 to 15	From 55'-0" to 156'-0"	2'-6"	No
Column Line AF Wall	From 22 to 26	From 55'-0" to 120'-0"	4'-0"	Yes
Column Line AF Wall	From 22.5 to 25.5	From 120'-0" to 156'-0"	8'-7"	Yes
Column Line AF Wall	From 22 to 26	From 156'-0" to 213'-6"	4'-0"	Yes
Column Line AF Wall	From 13 to 15	From 174'-0" to 195'-0"	3'-0"	No
Column Line AG Wall	From 12 to 15 From 22 to 23	From 55'-0" to 195'-0"	3'-0"	Yes
Column Line AG Wall	From 25 to 26	From 55'-0" to 171'-0"	3'-0"	Yes
Column Line AH Wall	From 15 to 17	From 55'-0" to 120'-0"	3'-0"	Yes
Column Line AH Wall	From 12 to 15	From 78'-0" to 100'-0"	2'-6"	No
Column Line AH Wall	From 23 to 24.5	From 55'-0" to 156'-0"	5'-6"	Yes
Column Line AH Wall	From 12 to 15	From 137'-6" to 156'-0"	2'-6"	No

Table 2.2.1-1 (9 of 32)

Wall or Section Description	Column Lines	Floor Elevation or Elevation Range	Concrete Thickness	Applicable Radiation Shielding Wall (Yes/No)
Column Line AI Wall	From 12 to 14	From 55'-0" to 100'-0"	2'-6"	Yes
Column Line AI Wall	From 15 to 23	From 55'-0" to 156'-0"	4'-0"	Yes
Column Line AI Wall	From 23 to 25	From 55'-0" to 156'-0"	5'-6"	Yes
Column Line AI Wall	From 12 to 14	From 137'-6" to 156'-0"	2'-6"	Yes
Column Line AI Wall	From 15 to 17	From 156'-0" to 195'-0"	3'-0"	No
Column Line AI Wall	From 17 to 18	From 156'-0" to 195'-0"	4'-0"	No
Column Line AI Wall	From 20 to 22	From 156'-0" to 195'-0"	3'-0"	Yes
Column Line AI Wall	From 22 to 23	From 156'-0" to 195'-0"	3'-6"	No
Column Line AJ Wall	From 12 to 15	From 55'-0" to 100'-0"	3'-0"	Yes
Column Line AJ Wall	From 15 to 23	From 55'-0" to 137'-6"	4'-0"	Yes
Column Line AJ Wall	From 23 to 26	From 55'-0" to 137'-6"	3'-0"	Yes
Column Line AJ Wall	From 22 to 23	From 78'-0" to 156'-0"	3'-6", 3'-0"	Yes
Column Line AJ Wall	From 12 to 18	From 137'-6" to 156'-0"	4'-0"	No
Column Line AJ Wall	From 12 to 17	From 156'-0" to 195'-0"	3'-0"	No
Column Line AJ Wall	From 20 to 22	From 137'-6" to 174'-0"	2'-0"	Yes
Column Line AK Wall	From 12 to 17 From 20 to 26	From 55'-0" to 156'-0" From 55'-0" to 174'-0"	4'-0"	Yes
Column Line AK Wall	From 17 to 20	From 55'-0" to 175'-0"	5'-0"	Yes
Column Line AK Wall	From 20 to 23	From 174'-0" to 216'-9"	3'-0"	Yes
Column Line AK Wall	From 23 to 26	From 174'-0" to 213'-6"	4'-0"	Yes

Table 2.2.1-1 (10 of 32)

Wall or Section Description	Column Lines	Floor Elevation or Elevation Range	Concrete Thickness	Applicable Radiation Shielding Wall (Yes/No)
All Walls within Column Lines	From AJ to AK From 12 to 13	From 55'-0" to 78'-0"	2'-6"	Yes
All Walls within Column Lines	From AA to AB From 12 to 13	From 55'-0" to 78'-0"	2'-6"	Yes
All Walls within Column Lines	From AH to AI From 20 to 22	From 55'-0" to 174'-0"	Min. 2'-6"	Yes
All Walls within Column Lines	From AC to AD From 20 to 22	From 55'-0" to 156'-0"	Min. 2'-6"	Yes
All Walls within Column Lines	From AI to AJ From 22 to 23	From 55'-0" to 195'-0"	1'-6"	Yes
All Walls within Column Lines	From AB to AC From 22 to 23	From 55'-0" to 174'-0"	1'-6"	Yes
All Walls within Column Lines	From AI to AJ From 23 to 24	From 55'-0" to 68'-0"	1'-6"	Yes
All Walls within Column Lines	From AB to AC From 23 to 24	From 55'-0" to 68'-0"	1'-6"	Yes
All Walls within Column Lines	From AH to AJ From 25 to 26	From 55'-0" to 68'-0"	Min. 1'-6"	Yes
All Walls within Column Lines	From AG to AH From 23 to 25	From 55'-0" to 68'-0"	Min. 2'-0"	Yes
All Walls within Column Lines	From AF to AG From 23 to 24	From 55'-0" to 68'-0"	Min. 2'-0"	Yes
All Walls within Column Lines	From AE to AF From 23 to 25	From 55'-0" to 68'-0"	Min. 1'-6"	Yes

Table 2.2.1-1 (11 of 32)

Wall or Section Description	Column Lines	Floor Elevation or Elevation Range	Concrete Thickness	Applicable Radiation Shielding Wall (Yes/No)
All Walls within Column Lines	From AD to AE From 25 to 26	From 55'-0" to 68'-0"	Min. 2'-0"	Yes
All Walls within Column Lines	From AJ to AK From 25 to 26	From 68'-0" to 78'-0"	2'-0"	Yes
Column Line AI Wall	From 25 to 26	From 68'-0" to 78'-0"	3'-0"	Yes
All Walls within Column Lines	From AH to AI From 25 to 26	From 68'-0" to 78'-0"	1'-6"	Yes
All Walls within Column Lines	From AA to AD From 25 to 26	From 68'-0" to 78'-0"	2'-0"	Yes
All Walls within Column Lines	From AB to AC From 23 to 25	From 68'-0" to 78'-0"	Min. 2'-0"	Yes
All Walls within Column Lines	From AG to AH From 21 to 23	From 78'-0" to 100'-0"	3'-0"	Yes
All Walls within Column Lines	From AD to AE From 21 to 23	From 78'-0" to 100'-0"	3'-0"	Yes
All Walls within Column Lines	From AB to AD From 24 to 25	From 77'-0" to 100'-0"	1'-6"	Yes
All Walls within Column Lines	From AB to AD From 23 to 24	From 77'-0" to 100'-0"	Min. 2'-0"	Yes
All Walls within Column Lines	From AG to AH From 15 to 16	From 100'-0" to 120'-0"	2'-6"	Yes
All Walls within Column Lines	From AF to AG From 15 to 16	From 78'-0" to 195'-0"	1'-6"	Yes

Table 2.2.1-1 (12 of 32)

Wall or Section Description	Column Lines	Floor Elevation or Elevation Range	Concrete Thickness	Applicable Radiation Shielding Wall (Yes/No)
All Walls within Column Lines	From AD to AE From 15 to 16	From 100'-0" to 120'-0"	2'-6"	Yes
All Walls within Column Lines	From AE to AF From 15 to 16	From 78'-0" to 195'-0"	1'-6"	Yes
All Walls within Column Lines	From AG to AI From 21 to 22	From 100'-0" to 120'-0"	3'-0"	Yes
All Walls within Column Lines	From AF to AI From 22 to 23	From 100'-0" to 120'-0"	4'-0"	Yes
All Walls within Column Lines	From AD to AE From 15 to 16	From 120'-0" to 156'-0"	1'-6"	Yes
All Walls within Column Lines	From AC to AD From 16 to 17	From 120'-0" to 137'-6"	1'-6"	Yes
All Walls within Column Lines	From AF to AG From 24 to 25 (SFP WALL ONLY)	From 120'-0" to 156'-0"	7'-0"	Yes
All Walls within Column Lines	From AA to AB From 25 to 26	From 120'-0" to 156'-0"	1'-6"	Yes
All Walls within Column Lines	From AC to AD From 24 to 26	From 120'-0" to 156'-0"	1'-6"	Yes
Column Line 25 Wall	From AA to AD	From 120'-0" to 156'-0"	2'-0"	Yes
All Walls within Column Lines	From AG to AH From 15 to 16	From 120'-0" to 195'-0"	1'-6"	Yes

Table 2.2.1-1 (13 of 32)

Wall or Section Description	Column Lines	Floor Elevation or Elevation Range	Concrete Thickness	Applicable Radiation Shielding Wall (Yes/No)
All Walls within Column Lines	From AC to AD From 19 to 20	From 78'-0" to 174'-0"	4'-0"	Yes
All Walls within Column Lines	From AB to AC From 22 to 23	From 137'-6" to 195'-0"	1'-6"	Yes
All Walls within Column Lines	From AH to AI From 15 to 17	From 156'-0" to 174'-0"	1'-6"	Yes
All Walls within Column Lines	From AH to AI From 19 to 20	From 78'-0" to 174'-0"	4'-0"	Yes
Floors	From AI to AJ From 14 to 16	70'-0"	2'-0"	Yes
Floors	From AB to AC From 14 to 16	70'-0"	2'-0"	Yes
All Walls within Column Lines	From AD to AE From 23 to 24	From 68'-0" to 78'-0"	2'-0"	Yes
All Walls within Column Lines	From AC to AD From 23 to 25	From 68'-0" to 78'-0"	3'-0"	Yes
All Walls within Column Lines	From AA to AB From 24 to 25	From 77'-0" to 100'-0"	3'-6"	Yes
All Walls within Column Lines	From AD to AE From 25 to 26	From 78'-0" to 100'-0"	3'-0"	Yes
All Walls within Column Lines	From AD to AE From 24 to 25	From 78'-0" to 100'-0"	2'-0"	Yes
All Walls within Column Lines	From AC to AD From 23 to 24	From 86'-0" to 100'-0"	3'-0"	Yes

Table 2.2.1-1 (14 of 32)

Wall or Section Description	Column Lines	Floor Elevation or Elevation Range	Concrete Thickness	Applicable Radiation Shielding Wall (Yes/No)
All Walls within Column Lines	From AG to AI From 21 to 22	From 100'-0" to 120'-0"	3'-0"	Yes
All Walls within Column Lines	From AA to AB From 20 to 22	From 156'-0" to 174'-0"	2'-0"	Yes
All Walls within Column Lines	From AI to AJ From 14 to 15	From 55'-0" to 78'-0"	2'-6"	Yes
All Walls within Column Lines	From AI to AJ From 15 to 16	From 55'-0" to 78'-0"	2'-0"	Yes
All Walls within Column Lines	From AI to AJ From 14 to 16	From 70'-0" to 78'-0"	2'-6"	Yes
All Walls within Column Lines	From AB to AC From 14 to 15	From 55'-0" to 78'-0"	2'-6"	Yes
All Walls within Column Lines	From AB to AC From 15 to 16	From 55'-0" to 78'-0"	2'-0"	Yes
All Walls within Column Lines	From AB to AC From 14 to 16	From 70'-0" to 78'-0"	2'-6"	Yes
All Walls within Column Lines	From AI to AJ From 20 to 21	From 55'-0" to 78'-0"	2'-0"	Yes
All Walls within Column Lines	From AB to AC From 20 to 21	From 55'-0" to 78'-0"	2'-0"	Yes
All Walls within Column Lines	From AI to AJ From 24 to 25	From 55'-0" to 78'-0"	1'-6"	Yes
All Walls within Column Lines	From AB to AC From 24 to 25	From 55'-0" to 78'-0"	1'-6"	Yes

Table 2.2.1-1 (15 of 32)

Wall or Section Description	Column Lines	Floor Elevation or Elevation Range	Concrete Thickness	Applicable Radiation Shielding Wall (Yes/No)
All Walls within Column Lines	From AH to AI From 24 to 25	From 55'-0" to 78'-0"	5'-0"	Yes
All Walls within Column Lines	From AF to AG From 24 to 25	From 55'-0" to 78'-0"	Min. 3'-0"	Yes
All Walls within Column Lines	From AE to AF From 25 to 26	From 55'-0" to 78'-0"	Min. 2'-0"	Yes
All Walls within Column Lines	From AC to AD From 24 to 25	From 55'-0" to 78'-0"	Min. 1'-6"	Yes
All Walls within Column Lines	From AC to AD From 25 to 26	From 55'-0" to 78'-0"	2'-6"	Yes
All Walls within Column Lines	From AB to AC From 25 to 26	From 55'-0" to 78'-0"	Min. 2'-0"	Yes
All Walls within Column Lines	From AJ to AK From 21 to 23	From 68'-0" to 78'-0"	1'-6"	Yes
All Walls within Column Lines	From AA to AB From 21 to 23	From 68'-0" to 78'-0"	1'-6"	Yes
All Walls within Column Lines	From AD to AE From 25 to 26	From 68'-0" to 78'-0"	3'-0"	Yes
All Walls within Column Lines	From AH to AI From 17 to 18	From 78'-0" to 100'-0"	1'-6"	Yes
All Walls within Column Lines	From AC to AD From 17 to 18	From 78'-0" to 100'-0"	1'-6"	Yes
All Walls within Column Lines	From AF to AG From 24 to 25	From 78'-0" to 100'-0"	Min. 5'-0"	Yes

Table 2.2.1-1 (16 of 32)

Wall or Section Description	Column Lines	Floor Elevation or Elevation Range	Concrete Thickness	Applicable Radiation Shielding Wall (Yes/No)
All Walls within Column Lines	From AE to AF From 24 to 25	From 78'-0" to 100'-0"	2'-0"	Yes
All Walls within Column Lines	From AB to AD From 25 to 26	From 78'-0" to 100'-0"	2'-0"	Yes
All Walls within Column Lines	From AH to AI From 17 to 18	From 100'-0" to 120’-0"	1'-6"	Yes
All Walls within Column Lines	From AC to AD From 17 to 18	From 100'-0" to 120’-0"	1'-6"	Yes
All Walls within Column Lines	From AE to AF From 24 to 25	From 100'-0" to 120’-0"	3'-6"	Yes
All Walls within Column Lines	From AF to AG From 22 to 23	From 120'-0" to 137’-6"	6'-0"	Yes
All Walls within Column Lines	From AF to AG From 23 to 24	From 120'-0" to 137’-6	6'-0"	Yes
All Walls within Column Lines	From AE to AF From 23 to 24	From 120'-0" to 137’-6	3'-0"	Yes
All Walls within Column Lines	From AE to AF From 24 to 25	From 120'-0" to 137’-6	3'-0"	Yes
All Walls within Column Lines	From AH to AI From 17 to 18	From 120'-0" to 137’-6	1'-6"	Yes
All Walls within Column Lines	From AC to AD From 17 to 18	From 120'-0" to 137’-6	1'-6"	Yes
All Walls within Column Lines	From AF to AG From 23 to 25	From 137’-6" to 156’-0”	6'-0"	Yes

Table 2.2.1-1 (17 of 32)

Wall or Section Description	Column Lines	Floor Elevation or Elevation Range	Concrete Thickness	Applicable Radiation Shielding Wall (Yes/No)
All Walls within Column Lines	From AH to AI From 17 to 18	From 137’-6" to 156’-0”	1'-6"	Yes
All Walls within Column Lines	From AC to AD From 17 to 18	From 137’-6" to 156’-0”	1'-6"	Yes
All Walls within Column Lines	From AH to AI From 20 to 22	From 156’-0” to 174’-0”	2'-6"	Yes
All Walls within Column Lines	From AC to AD From 20 to 22	From 156’-0” to 174’-0”	1'-6"	Yes
Floors	From AJ to AK From 25 to 26	68'-0"	1'-6"	Yes
Floors	From AI to AJ From 23 to 26	68'-0"	2'-0", 2'-6"	Yes
Floors	From AF to AI From 23 to 26	68'-0"	2'-0", 2'-6"	Yes
Floors	From AE to AF From 23 to 25	68'-0"	2'-0"	Yes
Floors	From AD to AE From 23 to 25	68'-0"	2'-0", 2'-6"	Yes
Floors	From AE to AF From 25 to 26	68'-0"	2'-0", 2'-6"	Yes
Floors	From AB to AD From 23 to 24	68'-0"	2'-6"	Yes
Floors	From AD to AE From 25 to 26	68'-0"	2'-0", 2'-6"	Yes

Table 2.2.1-1 (18 of 32)

Wall or Section Description	Column Lines	Floor Elevation or Elevation Range	Concrete Thickness	Applicable Radiation Shielding Wall (Yes/No)
Floors	From AA to AD From 24 to 26	68'-0"	2'-4", 2'-6"	Yes
Floors	From AB to AD From 24 to 25	77'-0"	2'-0", 2'-6", 3'-3"	Yes
Floors	From AK to Above AK From 15 to 19	78'-0"	1'-6"	Yes
Floors	From AJ to AK From 13 to 15	78'-0"	Min. 1'-6"	Yes
Floors	From AH to AJ From 15 to 19	78'-0"	2'-6"	Yes
Floors	From AB to AJ From 23 to 26	78'-0"	2'-0"	Yes
Floors	From AA to AB From 25 to 26	78'-0"	2'-0"	Yes
Floors	From AA to AB From 24 to 25	78'-0"	2'-6", 3'-0"	Yes
Floors	From AA to AB From 23 to 24	78'-0"	2'-6"	Yes
Floors	From AE to AG From 22 to 23	78'-0"	2'-0"	Yes
Floors	From AG to AI From 20 to 23	78'-0"	3'-0"	Yes
Floors	From AC to AE From 20 to 23	78'-0"	3'-0"	Yes

Table 2.2.1-1 (19 of 32)

Wall or Section Description	Column Lines	Floor Elevation or Elevation Range	Concrete Thickness	Applicable Radiation Shielding Wall (Yes/No)
Floors	From AI to AJ From 19 to 22	78'-0"	2'-6"	Yes
Floors	From AB to AC From 19 to 22	78'-0"	2'-6"	Yes
Floors	From AB to AD From 15 to 19	78'-0"	2'-6"	Yes
Floors	From Below AA to AA From 15 to 19	78'-0"	1'-6"	Yes
Floors	From AA to AB From 13 to 15	78'-0"	2'-6"	Yes
Floors	From AJ to AK From 23 to 26	78'-0"	2'-6"	Yes
Floors	From AJ to AK From 22 to 23	78'-0"	2'-6"	No
Floors	From AJ to AK From 12 to 13	78'-0"	1'-6"	No
Floors	From AJ to AK From 15 to 22	78'-0"	1'-6"	No
Floors	From AB to AJ From 12 to 15	78'-0"	1'-6"	No
Floors	From AE to AG From 15 to 17	78'-0"	1'-6"	No

Table 2.2.1-1 (20 of 32)

Wall or Section Description	Column Lines	Floor Elevation or Elevation Range	Concrete Thickness	Applicable Radiation Shielding Wall (Yes/No)
Floors	From AA to AB From 12 to 13	78'-0"	1'-6"	No
Floors	From AA to AB From 14 to 15	78'-0"	2'-6"	No
Floors	From AA to AB From 15 to 16	78'-0"	1'-6", 2'-6"	No
Floors	From AA to AB From 16 to 22	78'-0"	1'-6"	No
Floors	From AA to AB From 22 to 23	78'-0"	2'-6"	No
Floors	From AB to AC From 22 to 23	78'-0"	1'-6"	No
Floors	From AB to AD From 24 to 26	86'-0"	2'-0", 3'-3"	Yes
Floors	From AH to AI From 17 to 19	100'-0"	2'-0"	Yes
Floors	From AC to AD From 17 to 19	100'-0"	2'-0"	Yes
Floors	From AE to AF From 22 to 23	100'-0"	2'-0"	Yes
Floors	From AJ to AK From 24 to 26	100'-0"	2'-0"	Yes
Floors	From AC to AD From 24 to 26	100'-0"	2'-0"	Yes

Table 2.2.1-1 (21 of 32)

Wall or Section Description	Column Lines	Floor Elevation or Elevation Range	Concrete Thickness	Applicable Radiation Shielding Wall (Yes/No)
Floors	From AD to AE From 24 to 25	100'-0"	4'-0"	Yes
Floors	From AG to AI From 21 to 23	100'-0"	3'-0"	Yes
Floors	From AD to AJ From 25 to 26	100'-0"	2'-0"	Yes
Floors	From AC to AE From 21 to 23	100'-0"	3'-0"	Yes
Floors	From AE to AF From 24 to 25	100'-0"	3'-0"	Yes
Floors	From AH to AI From 23 to 25	100'-0"	2'-0"	Yes
Floors	From AI to AJ From 23 to 25	100'-0"	3'-6"	Yes
Floors	From AE to AF From 24 to 25	100'-0"	3'-0"	Yes
Floors	From AH to AK From 12 to 13	100'-0"	2'-0"	No
Floors	From AH to AK From 14 to 15	100'-0"	2'-0"	No
Floors	From AJ to AK From 15 to 24	100'-0"	2'-0"	No

Table 2.2.1-1 (22 of 32)

Wall or Section Description	Column Lines	Floor Elevation or Elevation Range	Concrete Thickness	Applicable Radiation Shielding Wall (Yes/No)
Floors	From AI to AJ From 21 to 23	100'-0"	2'-0"	No
Floors	From AG to AI From 15 to 17	100'-0"	2'-0"	No
Floors	From AH to AI From 19 to 20	100'-0"	2'-0"	No
Floors	From AD to AH From 12 to 15	100'-0"	2'-0"	No
Floors	From AA to AD From 12 to 13	100'-0"	2'-0"	No
Floors	From AA to AD From 14 to 15	100'-0"	2'-0"	No
Floors	From AC to AE From 15 to 17	100'-0"	2'-0"	No
Floors	From AA to AB From 15 to 23	100'-0"	2'-0"	No
Floors	From AC to AD From 19 to 20	100'-0"	2'-0"	No
Floors	From AB to AC From 21 to 22	100'-0"	2'-0"	No
Floors	From AA to AF From 23 to 24	100'-0"	2'-0"	No
Floors	From AA to AC From 24 to 26	100'-0"	2'-0"	No

Table 2.2.1-1 (23 of 32)

Wall or Section Description	Column Lines	Floor Elevation or Elevation Range	Concrete Thickness	Applicable Radiation Shielding Wall (Yes/No)
Floors	From AH to AK From 13 to 14	100'-0"	4'-0"	No
Floors	From AA to AD From 13 to 14	100'-0"	4'-0"	No
Floors	From AI to AJ From 15 to 21	100'-0"	4'-0"	No
Floors	From AB to AC From 15 to 21	100'-0"	4'-0"	No
Floors	From AH to AI From 20 to 21	100'-0"	2'-6"	No
Floors	From AC to AD From 20 to 21	100'-0"	2'-6"	No
Floors	From AF to AG From 22.4 to 24	113'-0", 114'-6"	5'-4"	Yes
Floors	From AG to AH From 23 to 25	114'-0"	6'-1"	Yes
Floors	From AD to AE From 25 to 26	117'-0"	1'-6"	Yes
Floors	From AF to AG From 24 to 25	118'-5"	4'-6"	Yes

Table 2.2.1-1 (24 of 32)

Wall or Section Description	Column Lines	Floor Elevation or Elevation Range	Concrete Thickness	Applicable Radiation Shielding Wall (Yes/No)
Floors	From AH to AI From 17 to 19	120'-0"	1'-6"	Yes
Floors	From AC to AD From 17 to 19	120'-0"	1'-6"	Yes
Floors	From AE to AF From 25 to 26	120'-0"	1'-6"	Yes
Floors	From AB to AC From 21 to 22	120'-0"	2'-0"	Yes
Floors	From AC to AD From 22 to 23	120'-0"	1'-6"	Yes
Floors	From AD to AF From 21 to 23	120'-0"	1'-6"	Yes
Floors	From AG to AK From 25 to 26	120'-0"	1'-6"	Yes
Floors	From AH to AJ From 12 to 13	120'-0"	1'-6"	No
Floors	From AH to AK From 14 to 15	120'-0"	1'-6"	No
Floors	From AJ to AK From 19 to 25	120'-0"	1'-6"	No
Floors	From AG to AI From 15 to 17	120'-0"	1'-6"	No
Floors	From AH to AI From 21 to 22	120'-0"	1'-6"	No

Table 2.2.1-1 (25 of 32)

Wall or Section Description	Column Lines	Floor Elevation or Elevation Range	Concrete Thickness	Applicable Radiation Shielding Wall (Yes/No)
Floors	From AD to AH From 12 to 15	120'-0"	1'-6"	No
Floors	From AC to AE From 15 to 17	120'-0"	1'-6"	No
Floors	From AB to AD From 12 to 13	120'-0"	1'-6"	No
Floors	From AA to AD From 14 to 15	120'-0"	1'-6"	No
Floors	From AA to AB From 19 to 23	120'-0"	1'-6"	No
Floors	From AA to AD From 23 to 26	120'-0"	1'-6"	No
Floors	From AD to AF From 23 to 24	120'-0"	1'-6"	No
Floors	From AE to AF From 24 to 25	120'-0"	1'-6"	No
Floors	From AJ to AK From 15 to 19	120'-0"	2'-6"	No
Floors	From AA to AB From 15 to 19	120'-0"	2'-6"	No
Floors	From AB to AC From 20 to 21	137'-6"	4'-0"	Yes
Floors	From AH to AI From 22 to 23	137'-6"	2'-3"	Yes

Table 2.2.1-1 (26 of 32)

Wall or Section Description	Column Lines	Floor Elevation or Elevation Range	Concrete Thickness	Applicable Radiation Shielding Wall (Yes/No)
Floors	From AA to AE From 23 to 26	137'-6"	1'-6", 4'-6"	Yes
Floors	From AD to AF From 22 to 23	137'-6"	2'-0"	Yes
Floors	From AG to AH From 22 to 23	137'-6"	2'-6"	Yes
Floors	From AC to AD From 18 to 20	137'-6"	1'-6"	Yes
Floors	From AH to AI From 18 to 20	137'-6"	1'-6"	Yes
Floors	From AG to AK From 24 to 26	137'-6"	1'-6"	Yes
Floors	From AC to AD From 22 to 23	137'-6"	2'-0"	Yes
Floors	From AB to AJ From 12 to 15	137'-6"	1'-6"	No
Floors	From AG to AI From 15 to 17	137'-6"	1'-6"	No
Floors	From AC to AE From 15 to 17	137'-6"	1'-6"	No

Table 2.2.1-1 (27 of 32)

Wall or Section Description	Column Lines	Floor Elevation or Elevation Range	Concrete Thickness	Applicable Radiation Shielding Wall (Yes/No)
Floors	From AA to AB From 20 to 23	137'-6"	1'-6"	No
Floors	From AE to AF From 25 to 26	137'-6"	1'-6"	No
Floors	From AH to AJ From 21 to 22	137'-6"	1'-6"	No
Floors	From AJ to AK From 20 to 23	137'-6"	1'-6"	No
Floors	From AJ to AK From 12 to 20	137'-6"	4'-0"	No
Floors	From AI to AJ From 17 to 21	137'-6"	4'-0"	No
Floors	From AA to AB From 12 to 20	137'-6"	4'-0"	No
Floors	From AB to AC From 17 to 20	137'-6"	4'-0"	No
Floors	From AI to AJ From 15 to 17	137'-6"	2'-0"	No
Floors	From AB to AC From 15 to 17	137'-6"	2'-0"	No
Floors	From AE to AF From 23 to 26	154'-6"	3'-0"	Yes

Table 2.2.1-1 (28 of 32)

Wall or Section Description	Column Lines	Floor Elevation or Elevation Range	Concrete Thickness	Applicable Radiation Shielding Wall (Yes/No)
Floors	From AB to AI From 12 to 15	156'-0"	1'-6"	Yes
Floors	From AI to AK From 20 to 21	156'-0"	1'-6"	Yes
Floors	From AJ to AK From 21 to 22	156'-0"	1'-6"	Yes
Floors	From AI to AJ From 12 to 15	156'-0"	1'-6"	No
Floors	From AG to AJ From 15 to 17	156'-0"	1'-6"	No
Floors	From AJ to AK From 22 to 26	156'-0"	1'-6"	No
Floors	From AG to AJ From 21 to 23	156'-0"	1'-6"	No
Floors	From AG to AI From 24 to 26	156'-0"	1'-6"	No
Floors	From AI to AJ From 25 to 26	156'-0"	1'-6"	No
Floors	From AI to AJ From 23 to 25	156'-0"	1'-6", 2'-0", 4'-0"	No

Table 2.2.1-1 (29 of 32)

Wall or Section Description	Column Lines	Floor Elevation or Elevation Range	Concrete Thickness	Applicable Radiation Shielding Wall (Yes/No)
Floors	From AB to AE From 15 to 17	156'-0"	1'-6"	No
Floors	From AA to AB From 20 to 26	156'-0"	1'-6"	No
Floors	From AB to AD From 22 to 26	156'-0"	1'-6"	No
Floors	From AD to AE From 24 to 26	156'-0"	3'-0"	No
Floors	From AB to AC From 20 to 22	169'-6"	1'-6"	Yes
Floors	From AC to AI From 12 to 15	174'-0"	1'-6"	Yes
Floors	From AI to AK From 20 to 23	174'-0"	1'-6"	Yes
Floors	From AA to AB From 20 to 26	174'-0"	1'-6"	Yes
Floors	From AI to AJ From 12 to 15	174'-0"	1'-6"	No
Floors	From AG to AJ From 15 to 18	174'-0"	1'-6"	No
Floors	From AJ to AK From 17 to 18	174'-0"	1'-6"	No
Floors	From AH to AK From 18 to 20	174'-0"	1'-6"	No

Table 2.2.1-1 (30 of 32)

Wall or Section Description	Column Lines	Floor Elevation or Elevation Range	Concrete Thickness	Applicable Radiation Shielding Wall (Yes/No)
Floors	From AG to AI From 21 to 23	174'-0"	1'-6"	No
Floors	From AB to AC From 12 to 15	174'-0"	1'-6"	No
Floors	From AB to AE From 15 to 17	174'-0"	1'-6"	No
Floors	From AA to AD From 17 to 20	174'-0"	1'-6"	No
Floors	From AB to AC From 22 to 23	180'-0"	1'-6"	Yes
Floors	From AI to AK From 20 to 22	195'-0"	1'-6"	Yes
Floors	From AJ to AK From 22 to 23	195'-0"	1'-6"	Yes
Floors	From AI to AJ From 13 to 15	195'-0"	1'-6"	No
Floors	From AH to AJ From 16 to 18	195'-0"	1'-6"	No
Floors	From AJ to AK From 17 to 18	195'-0"	1'-6"	No
Floors	From AH to AI From 13 to 14	195'-0"	1'-6"	No

Table 2.2.1-1 (31 of 32)

Wall or Section Description	Column Lines	Floor Elevation or Elevation Range	Concrete Thickness	Applicable Radiation Shielding Wall (Yes/No)
Floors	From AG to AI From 20 to 23	195'-0"	1'-6"	No
Floors	From AD to AH From 12 to 14	195'-0"	1'-6"	No
Floors	From AB to AD From 13 to 14	195'-0"	1'-6"	No
Floors	From AB to AC From 14 to 15	195'-0"	1'-6"	No
Floors	From AA to AB From 17 to 18	195'-0"	1'-6"	No
Floors	From AB to AD From 16 to 18	195'-0"	1'-6"	No
Floors	From AI to AJ From 12 to 13	195'-0"	2'-9"	No
Floors	From AB to AC From 12 to 13	195'-0"	2'-9"	No
Floors	From AC to AD From 12 to 13	195'-0"	1'-6",2'-9"	No
Floors	From AH to AI From 12 to 13	195'-0"	1'-6",2'-9"	No
Floors	From AH to AJ From 15 to 16	213'-0"	1'-6"	No
Floors	From AC to AI From 14 to 15	213'-0"	1'-6"	No

Table 2.2.1-1 (32 of 32)

Wall or Section Description	Column Lines	Floor Elevation or Elevation Range	Concrete Thickness	Applicable Radiation Shielding Wall (Yes/No)
Floors	From AB to AD From 15 to 16	213'-0"	1'-6"	No
Floors	From AI to AK From 20 to 22	215'-0"	2'-0"	Yes
Floors	From AF to AK From 23 to 26	215'-0"	1'-6"	Yes
Floors	From AI to AJ From 22 to 23	226'-6"	1'-6"	Yes

(1) Reduction of the basemat thickness is less than - 5 % of specified thickness.

Table 2.2.1-2 (1 of 9)

Design Basis Radiation Shield Thicknesses of Compound Building and Yard Area

Room Number	Room Name	Minimum Required Shield Thickness (inches)					
		North	South	East	West	Floor	Ceiling
Compound Building							
063-P01	Hot Pipe Chase	10	28	28	10	Ground	17
063-P02	GRS Header Drain Tank Room	35	42	48	41	Ground	18
063-P03	Valve Room	27	30	37	10	Ground	10
063-P04	GRS Inlet Skid Room	22	34	10	22	Ground	13
063-P05	Spent Resin Long-term Storage Tank Room	27	35	48	36	Ground	46
063-P06	Future Use	36	27	48	36	Ground	39
063-P07	Valve Room	16	29	36	30	Ground	14
063-P08	Low-activity Spent Resin Tank Room	27	32	35	10	Ground	10
063-P09	Valve Room	16	36	10	16	Ground	18
063-P13	Hot Pipe Chase	40	33	40	33	Ground	19
063-P14	Hot Tool Room	15	10	10	10	Ground	32
063-P21	Equip. Waste Pump Room	17	19	10	20	Ground	17
063-P22	Equip. Waste Pump Room	10	17	10	21	Ground	17
063-P23	Equip. Waste Tank Room	13	33	20	22	Ground	27
063-P24	Equip. Waste Tank Room	16	13	21	22	Ground	27
063-P25	Floor Drain Pump Room	14	10	11	19	Ground	10
063-P26	Normal Sump Pump Room	14	14	10	19	Ground	16
063-P27	Chemical Waste Pump Room	10	14	10	15	Ground	16
063-P28	Floor Drain Tank Room	16	16	19	20	Ground	29
063-P29	Floor Drain Tank Room	16	16	19	20	Ground	29
063-P30	Chemical Waste Tank Room	10	16	15	10	Ground	15
063-P31	Chemical Waste Tank Room	10	10	15	10	Ground	15
063-P36	DWS Drain Sump Pump Room	10	10	10	10	Ground	10

Table 2.2.1-2 (2 of 9)

Room Number	Room Name	Minimum Required Shield Thickness (inches)					
		North	South	East	West	Floor	Ceiling
Compound Building (cont.)							
063-P37	Monitor Tank Room	10	18	11	18	Ground	10
063-P38	PSS-Solidification & Drum Conveyer Room	17	24	24	21	Ground	14
063-P39	Spent Resin Long-term Storage Tank Sump Pump Room	18	20	18	21	Ground	18
063-P40	Concentrate Pump Room	27	24	20	16	Ground	19
063-P41	Concentrate Holding Tank Room	21	27	33	28	Ground	10
063-P42	RO Feed Pump Room	10	10	28	16	Ground	24
063-P43	IX Feed Pump Room	16	10	16	10	Ground	24
063-P44	IX Feed Tank Room	14	16	11	10	Ground	23
063-P47	CTS HEPA Vacuum Skid Room	24	10	21	10	Ground	10
063-P48	CTS Dryer Skid Room	31	24	17	21	Ground	15
063-P49	CTS Vacuum Skid Room	10	10	21	10	Ground	18
063-P54	Monitor Tank Pump Room	10	10	10	10	Ground	14
063-P73	Future Use	36	43	18	48	Ground	36
085-P01	Waste Gas Dryer Skid Room	18	31	31	25	17	24
085-P02	Waste Gas Dryer Skid Room	11	18	22	25	17	24
085-P03	Valve Room	48	11	30	26	18	36
085-P04	Charcoal Guard Bed Room	27	27	35	18	10	24
085-P06	Valve Room	19	26	36	30	19	27
085-P07	Valve Room	27	24	30	30	14	24
085-P08	Valve Room	24	19	22	24	19	24
085-P15	Valve Room	10	21	21	18	10	23
085-P16	Valve Room	10	22	18	19	10	22
085-P17	Valve Room	10	10	10	14	10	17
085-P20	Valve Room	16	16	16	16	10	16
085-P21	Charcoal Guard Bed Room	27	27	18	35	10	24
085-P31	Primary Sampling Room	10	10	10	10	10	10

Table 2.2.1-2 (3 of 9)

Room Number	Room Name	Minimum Required Shield Thickness (inches)					
		North	South	East	West	Floor	Ceiling
Compound Building (cont.)							
085-P32	Primary Sampling Sink Room	10	13	12	12	14	18
085-P42	IX Module Room	10	30	30	27	14	28
085-P43	IX Module Room	30	10	30	30	14	28
085-P44	RO Feed Tank Room	10	27	32	22	19	25
085-P45	Drum Removal Chase	15	15	15	15	-	25
085-P46	MF Membrane Module Room	23	10	20	15	18	16
085-P47	MF Membrane Module Room	23	16	10	12	15	16
085-P48	RO Membrane Module and Valve Skid Room	43	24	43	34	32	36
096-P01	Charcoal Delay Bed Room	49	47	49	15	36	43
096-P02	Charcoal Delay Bed Room	49	47	15	40	36	43
100-P02	GRS Equipment Removal Area	13	11	40	10	23	10
100-P07	Future Extension Area	24	30	36	37	24	31
100-P08	Truck Bay	24	24	36	37	36	31
100-P09	Waste Drum Storage Area	28	24	36	26	34	31
100-P10	Spent Filter Drum Storage Area	36	28	48	37	36	43
120-P01	Gaseous Radwaste Sample Control Panel Room	16	21	21	12	18	26
120-P02	Gaseous Radwaste Sample Valve Rack Room	22	16	26	18	18	26
139-P06	Normal Exhaust ACU Room	20	20	20	20	20	20
Yard							
-	Boric Acid Storage Tank	16	16	16	16	-	-
-	Holdup Tank	15 (1)	15 (1)	15 (1)	15 (1)	-	-

(1) Including the Tank wall of 0.25 inches

Table 2.2.1-2 (4 of 9)

Room Number	Room Name	Face to			Minimum Required Shield Thickness (inches)
		Structure	Room Number	Room Name	
Additional Information on the Rooms which Contain Complex Geometries					
068-A07A	Hot Pipe Way	Slab	055-A45A	Pipe Chase	10
		Slab	055-A42A	Charging Pump Room	22
		Slab	055-A35A	General Access Area	24
		Slab	055-A39A	Process Radiation Monitor Room	21
		Slab	055-A58A	Pipe Chase	17
		Slab	055-A30A	SC Hx Room	19
		Slab	078-A38A	Spent Fuel Pool Clean up Pump Room	23
		Slab	078-A39A	Gas Stripper Effluents Radiation Monitor Room	16
		Slab	078-A31A	General Access Area	24
068-A10A	Filter and Demin Valve Room	Slab	055-A35A	General Access Area	30
		Slab	055-A36A	CVCS Chemical Package Room	30
		Slab	078-A34A	Pre-Holdup Ion Exchange	15
		Slab	078-A35A	Purification Ion Exchange Room	13
		Slab	078-A37A	Deborating Ion Exchange Room	24
		Slab	077-A01A	Reactor Drain Filter Pit	15
		Slab	077-A06A	Purification Filter Pit	10
		Slab	077-A08A	Purification Filter Pit	10
		Slab	077-A10A	Seal Injection Filter Pit	10

Table 2.2.1-2 (5 of 9)

Room Number	Room Name	Face to (floor)			Minimum Required Shield Thickness (inches)
		Structure	Room Number	Room Name	
Additional Information on the Rooms which Contain Complex Geometries (cont.)					
077-P01	Hot Pipe Way	Slab	063-P27	Chemical Waste Pump Room	14
		Slab	063-P33	Sampling Room	14
		Slab	063-P34	LRS Control Panel Room	14
		Slab	063-P54	Monitor Tank Pump Room	14
		Slab	063-P56	Drop Area & Opening	14
		Slab	063-P57	Sorting Room	14
		Slab	063-P21	Equip. Waste Pump Room	15
		Slab	063-P22	Equip. Waste Pump Room	17
		Slab	063-P25	Floor Drain Pump Room	10
		Slab	063-P26	Normal Sump Pump Room	16
		Slab	063-P38	PSS-solidification & Drum Conveyor Room	16
		Slab	063-P46	Corridor	25
		Slab	063-P11	Corridor	28
		Slab	063-P09	Valve Room	20
		Slab	063-P40	Concentrate pump Room	20
		Slab	063-P41	Concentrate holding tank Room	10
		Slab	063-P42	RO feed pump Room	24
		Slab	063-P43	IX feed pump Room	24
		Slab	063-P44	IX Feed tank Room	23
		Slab	063-P45	Hot tool Room	23
		Slab	063-P04	GRS inlet skid Room	13
		Slab	063-P07	Valve Room	14
		Slab	063-P10	Hot tool Room	24
		Slab	063-P16	Corridor (2)	18
		Slab	063-P16	Corridor (3)	24

(2) Section within the column line from 33 to 36 and from PF to PG
(3) Section within the column line from 36 to 37 and from PB to PG

Table 2.2.1-2 (6 of 9)

Room Number	Room Name	Openings for			Minimum Required Shield Thickness (inches)			
		Structure	Room Number	Room Name	North	South	East	West
Additional Information on the Rooms which Contain Complex Geometries (cont.)								
077-P01	Hot Pipe Way	Wall	063-P26	Normal Sump Room	16	16	16	19
		Wall	063-P56	Drop Area	14	14	18	14
		Wall	085-P45	Drum Removal Chase	16	16	16	16
		Wall	063-P16	Corridor (4)	24	-	24	20
		Opening within the column line from 36 to 37 and PE to PG						
		Wall	063-P16	Corridor	18	24	-	24
		Wall	057-P01	Elev. Hoist Way	18	-	34	-
		Wall	063-P18	Stair	-	32	32	-
		Opening within the column line from 36 to 37 and PB to PE						
		Wall	063-P16	Corridor	20	20	-	20
		Wall	063-P19	Elect. Riser	29	-	29	-
		Wall	063-P39	Spent Resin Long Term Storage Pump Room	18	21	15	21
		Wall	063-P20	HVAC Chase	-	18	30	-

(4) Opening within the column line from 36 to 37 and from PA to PB

Table 2.2.1-2 (7 of 9)

Room Number	Room Name	Face to (side wall)			Minimum Required Shield Thickness (inches)
		Structure	Room Number	Room Name	
Additional Information on the Rooms which Contain Complex Geometries (cont.)					
077-P01	Hot Pipe Way	Wall	-	Yard (5)	28
		Wall	063-P23	Equipment Waste Tank Room	15
		Wall	063-P24	Equipment Waste Tank Room	15
		Wall	063-P28	Floor Drain Tank Room	16
		Wall	063-P29	Floor Drain Tank Room	19
		Wall	063-P30	Chemical Waste Tank Room	10
		Wall	063-P31	Chemical Waste Tank Room	10
		Wall	063-P16	Corridor (6)	18
		Wall	063-P52	Chemical Drain Sump Pump Room	14
		Wall	062-P02	Mask Decontamination Room	14
		Wall	063-P64	Corridor	14
		Wall	063-P61	Laundry Storage	14
		Wall	063-P51	Stair	17
		Wall	063-P78	Pipe Chase	14
		Wall	063-P32	Detergent Waste Tank & Pump Room	14
		Wall	063-P37	Monitor Tank Room	18
		Wall	063-P16	Corridor (7)	18
		Wall	063-P46	Corridor - Wall within the column line from 37 to 38 along the row line PG - Wall within the row line from PG to PH along the column line 38	 18 25
		Wall	063-P38	PSS-Solidification	16

(5) Exterior wall within the column line from 35 to 36 along the row line PA
(6) Section within the column line from 33 to 35 and from PF to PG
(7) Side wall within the column line from 36 to 37 along the row line PG

Table 2.2.1-2 (8 of 9)

Room Number	Room Name	Face to (side wall)			Minimum Required Shield Thickness (inches)
		Structure	Room Number	Room Name	
Additional Information on the Rooms which Contain Complex Geometries (cont.)					
077-P01	Hot Pipe Way	Wall	085-P45	Opening for Drum Removal Chase (West wall)	16
		Wall	063-P48	CTS-Dryer Skid Room	17
		Wall	063-P13	Hot Pipe Chase	10
		Wall	-	Yard (8)	38
		Wall	063-P11	Corridor (9) - South wall - East wall	 28 28
		Wall	063-P08	Low Activity Spent Resin Tank Room	10
		Wall	063-P06	Future Use Area	32
		Wall	063-P05	Spent Resin Long term Storage Tank Room	32
		Wall	063-P02	GRS Header Drain Tank	24
		Wall	063-P16	Corridor (10)	24
		Wall	063-P01	Hot Pipe Chase	17
		Wall	-	Yard (11)	32

(8) Exterior wall within the row line from PF to PI along the column line 39
(9) Section within the column line from 38 to 39 and from PE to PF
(10) Section within the column line from 38 to 39 and from PB to PC
(11) Exterior wall within the column line from 37 to 38 along the row line PA

Table 2.2.1-2 (9 of 9)

Room Number	Room Name	Face to (side wall)			Minimum Required Shield Thickness (inches)
		Structure	Room Number	Room Name	
Additional Information on the Rooms which Contain Complex Geometries (cont.)					
077-P01	Hot Pipe Way	Slab	085-P14	Corridor (12)	18
		Slab	085-P17	Valve Room	10
		Slab	085-P20	Valve Room	10
		Slab	085-P31	Primary Sampling Room	10
		Slab	085-P32	Primary Sampling Sink Room	10
		Slab	085-P33	Hot Tool Room	16
		Slab	085-P35	Storage	14
		Slab	085-P15	Valve Room	10
		Slab	085-P16	Valve Room	10
		Slab	085-P44	RO Feed Tank Room	21
		Slab	085-P45	Drum Removal Chase	16
		Slab	085-P46	MF Membrane Module Room	20
		Slab	085-P07	Valve Room	16
		Slab	085-P08	Valve Room	22
		Slab	085-P14	Corridor (13)	30
		Slab	085-P14	Corridor (14)	24
		Slab	085-P42	IX Module Room	16
		Slab	085-P43	IX Module Room	16
		Slab	085-P01	Waste Gas Dryer Skid Room	15
		Slab	085-P02	Waste Gas Dryer Skid Room	16
		Slab	085-P03	Valve Room	19
		Slab	085-P04	Charcoal Guard Bed Room	10
		Slab	085-P06	Valve Room	22
		Slab	085-P21	Charcoal Guard Bed Room	10

(12) Section within the column line from 35 to 37 and from PF to PG
(13) Section within the column line from 37 to 38 and from PE to PF
(14) Section within the column line from 36 to 37 and from PB to PE

Table 2.2.1-3 (1 of 2)

Nuclear Island Structures ITAAC

Design Commitment	Inspections, Tests, Analyses	Acceptance Criteria
1. The basic configuration of the nuclear island (NI) structures is as described in the design description of Subsection 2.2.1.1 and Figures 2.2.1-1 through 2.2.1-13.	1. Inspection of the basic configuration of the as-built NI structures will be conducted.	1. The NI structures conform with the basic configuration as described in the design description of Subsection 2.2.1.1 and Figures 2.2.1-1 through 2.2.1-13.
2.a The containment, except the steel portions of the containment not backed by concrete, is designed and constructed in accordance with ASME Section III, Div.2 requirements.	2.a Inspection of the as-built containment, except the steel portions of the containment not backed by concrete, will be performed in accordance with the ASME Code, Section III, Div. 2 and will be documented in the ASME data report(s).	2.a The ASME Code data report(s) exist and conclude that the as-built containment, except the steel portions of the containment not backed by concrete, is designed and constructed in accordance with the requirements of ASME Section III, Div. 2.
2.b The containment penetrations are designed and constructed to meet ASME Section III, Div. 1 (portions not backed by concrete) and Div. 2 (portions backed by concrete).	2.b Inspection of the as-built containment penetrations in accordance with the ASME Code, Section III, Div. 1 (portions not backed by concrete) and Div. 2 (portions backed by concrete) will be conducted and will be documented in the ASME data report(s).	2.b The ASME Code data report(s) exist and conclude that the as-built containment penetrations are designed and constructed consistent with the requirements of ASME Section III, Div. 1 (portions not backed by concrete) and Div. 2 (portions backed by concrete).
2.c The containment and its penetrations retain their pressure boundary integrity associated with the design pressure.	2.c. Structural integrity test of the as-built containment and its penetrations will be conducted in accordance with ASME Code, Section III, Div. 2 and Div. 1, respectively.	2.c The results of the structural integrity test of the as-built containment and its penetrations conform with the pressure testing acceptance criteria in ASME Section III, Div. 2 and Div. 1, respectively.

Table 2.2.1-3 (2 of 2)

Design Commitment	Inspections, Tests, Analyses	Acceptance Criteria
2.d The containment and its penetrations maintain the containment leakage rate less than or equal to the maximum allowable leakage rate associated with the peak containment pressure for the design basis accident in accordance with 10 CFR Part 50, Appendix J.	2.d Inspection and leak rate testing on the as-built containment and its penetrations will be conducted in accordance with 10 CFR Part 50, Appendix J.	2.d The results of the inspection and leak rate testing on the as-built containment and its penetrations demonstrate that the containment leakage rate is less than or equal to the maximum allowable limits specified in accordance with 10 CFR Part 50, Appendix J.
3. The NI structures are seismic Category I, and are designed and constructed to withstand the structural design basis loads.	3. A structural analysis will be performed to reconcile the as-built NI structures with the structural design basis loads.	3. A report exists and concludes that the as-built NI structures can withstand the design basis loads.
4. The dimensions and elevations of the NI structure are as described in Table 2.2.1-1 and Figures 2.2.1-1 through 2.2.1-13.	4. Inspection will be performed of the dimensions and elevations of the as-built NI structures.	4. A report exists and concludes that the as-built dimensions and elevations of the NI structures are as described in Table 2.2.1-1 and Figures 2.2.1-1 through Figure 2.2.1-13.
5. Nuclear Island (NI) structures are designed and constructed in accordance with the codes and standards listed in Table 2.2.1-6.	5. An analysis will be performed for any deviations from the codes and standards listed in Table 2.2.1-6.	5. A report exists and concludes that the NI structures are designed and constructed in accordance with the codes and standards listed in Table 2.2.1-6.
6. The critical sections and design attributes of the NI structures are in accordance with Table 2.2.1-5.	6. A review of the as-built design and construction documentation will be performed to verify the critical sections and design attributes are in accordance with Table 2.2.1-5.	6. A reports exists and concludes the critical sections and design attributes of the NI structures are in accordance with Table 2.2.1-5.

Table 2.2.1-4

Seismic Classification of the Building

Structure	Seismic Category
Reactor Containment Building	I
Auxiliary Building	I
Emergency Diesel Generator Building Block	I
Turbine Generator Building	II
Compound Building	II
Essential Service Water Building	I
Component Cooling Water Heat Exchanger Building	I

Table 2.2.1-5 (1 of 8)

Critical Sections and Design Attributes

Critical Sections	Design Attributes Ratio(R) ≤ Demand/Capacity		
Containment Wall and Dome			
Cylindrical Wall-Basemat Junction Area	Meridional Direction (1)	Inside	0.78 / 0.80
		Outside	0.66 / 0.99
	Hoop Direction (1)	Inside	0.60 / 0.54
		Outside	0.67 / 0.96
Equipment Hatch	Meridional Direction (1)	Inside	0.73 / 0.73
		Outside	0.73 / 1.00
	Hoop Direction (1)	Inside	0.75 / 0.70
		Outside	0.61 / 0.91
Personnel Airlock	Meridional Direction (1)	Inside	0.59 / 0.53
		Outside	0.70 / 1.00
	Hoop Direction (1)	Inside	0.95 / 0.81
		Outside	0.85 / 0.98
Polar Crane Brackets Area Level and Springline	Meridional Direction (1)	Inside	0.51 / 0.31
		Outside	0.35 / 0.88
	Hoop Direction (1)	Inside	0.80 / 0.67
		Outside	0.42 / 0.81
Containment Dome	Meridional Direction (1)	Inside	0.09 / 0.05
		Outside	0.43 / 0.93
	Hoop Direction (1)	Inside	0.38 / 0.30
		Outside	0.58 / 0.94
Mid-Height of Wall	Meridional Direction (1)	Inside	0.87 / 0.72
		Outside	0.63 / 0.85
	Hoop Direction (1)	Inside	0.73 / 0.58
		Outside	0.63 / 0.93

Table 2.2.1-5 (2 of 8)

Critical Sections	Design Attributes Ratio(R) ≤ Demand/Capacity		
Containment Liner Plate/Anchorage	Liner Plate [(2)]	Construction	0.82
	Liner Plate [(3)]	Service (membrane strain)	0.60
		Service (membrane & bending strain)	1.00
		Factored (membrane strain)	0.48
		Factored (membrane & bending strain)	0.44
	Liner Anchorage [(4)]	0.33	
Containment Internal Structures			
North wall of Primary Shield Wall	Meridional Direction [(9)]	0.87	
	Hoop Direction [(9)]	0.80	
East wall of Primary Shield Wall	Meridional Direction [(9)]	0.75	
	Hoop Direction [(9)]	0.89	
South wall of Primary Shield Wall	Meridional Direction [(9)]	0.83	
	Hoop Direction [(9)]	0.79	
Secondary Shield Wall	Meridional Direction [(9)]	0.86	
	Hoop Direction [(9)]	0.92	
Refueling Pool Wall (North /South Wall)	Meridional Direction [(9)]	0.88	
	Hoop Direction [(9)]	0.88	
Refueling Pool Wall (West Wall)	Meridional Direction [(9)]	0.79	
	Hoop Direction [(9)]	0.82	
Steam Generator Enclosure Wall (Circular Wall)	Meridional Direction [(9)]	0.78	
	Hoop Direction [(9)]	0.90	

Table 2.2.1-5 (3 of 8)

Critical Sections	Design Attributes Ratio(R) ≤ Demand/Capacity		
Steam Generator Enclosure Wall (Straight Wall)	Meridional Direction (9)	0.78	
	Hoop Direction (9)	0.87	
Pressurizer Enclosure Wall	Meridional Direction (9)	0.82	
	Hoop Direction (9)	0.76	
Top Slab in IRWST	Meridional Direction (7)	0.84	
	Hoop Direction (7)	0.34	
Outer Wall in IRWST	Meridional Direction (7)	0.05	
	Hoop Direction (7)	0.57	
Operating Floor Slab at Elevation 156 ft 0 in	Radial Direction (7) (at SSW Area)	2ft Thickness	0.85
	Radial Direction (7) (at Central Area)		0.81
	Tangential Directions (7)		0.90
	Radial Direction (7) (at SSW Area)	3ft Thickness	0.68
	Radial Direction (7) (at Central Area)		0.98
	Tangential Directions (7)		0.93
Nuclear Island (NI) Common Basemat			
Tendon Gallery Outside Area of RCB Basemat (Section–01)	Flexural Rebar (5)	0.91 / 0.76	
	Shear Reinforcement (6)	0.84	
Tendon Gallery Upper Area of RCB Basemat (Section–02)	Flexural Rebar (5)	0.81 / 0.43	
	Shear Reinforcement (6)	0.73	
Tendon Gallery Below Area of RCB Basemat (Section–03)	Flexural Rebar (5)	0.42 / 0.33	
	Shear Reinforcement (6)	0.46	

Table 2.2.1-5 (4 of 8)

Critical Sections	Design Attributes Ratio(R) ≤ Demand/Capacity		
R = 63.25’ to 70.5’ at El. 45’ to El. 78’ of RCB Basemat (Section-04)	Flexural Rebar (5)	0.36 / 0.73	
	Shear Reinforcement (6)	0.01	
R = 42.5’ to 63.25’ exclude Design Sections -06, -07, -08 (Section-05)	Flexural Rebar (5)	0.47 / 0.99	
	Shear Reinforcement (6)	0.53	
Cavity Area at El. 55’ to 66’ of RCB Basemat (Section-06)	Flexural Rebar (5)	0.25 / 0.57	
	Shear Reinforcement (6)	0.90	
x = 22’ to 39’ and y = 0’ to 18.75’ at El. 55’ to 76’ of RCB Basemat (Section-07)	Flexural Rebar (5)	0.25 / 0.67	
	Shear Reinforcement (6)	0.74	
x,y = 0’ to 42.5’ exclude Design Sections -06, 07 of RCB Basemat (Section-08)	Flexural Rebar (5)	0.37 / 0.95	
	Shear Reinforcement (6)	0.81	
NI Basemat Below Auxiliary Building	EW Direction (7)	Element Set 1 (8)	0.76
	NS Direction (7)		0.88
	Shear Reinforcement (7)		0.72
	EW Direction (7)	Element Set 2 (8)	0.93
	NS Direction (7)		0.75
	Shear Reinforcement (7)		0.35
	EW Direction (7)	Element Set 3 (8)	0.78
	NS Direction (7)		0.83
	Shear Reinforcement (7)		0.65
	EW Direction (7)	Element Set 4 (8)	0.90
	NS Direction (7)		0.87
	Shear Reinforcement (7)		0.74

Table 2.2.1-5 (5 of 8)

Critical Sections	Design Attributes Ratio(R) ≤ Demand/Capacity		
NI Basemat Below Auxiliary Building	EW Direction (7)	Element Set 5 (8)	0.76
	NS Direction (7)		0.73
	Shear Reinforcement (7)		0.72
	EW Direction (7)	Element Set 6 (8)	0.89
	NS Direction (7)		0.81
	Shear Reinforcement (7)		0.88
	EW Direction (7)	Element Set 7 (8)	0.71
	NS Direction (7)		0.70
	Shear Reinforcement (7)		0.52
	EW Direction (7)	Element Set 8 (8)	0.80
	NS Direction (7)		0.68
	Shear Reinforcement (7)		0.97
	EW Direction (7)	Element Set 9 (8)	0.92
	NS Direction (7)		0.87
	Shear Reinforcement (7)		0.93
	EW Direction (7)	Element Set 10 (8)	0.79
	NS Direction (7)		0.78
	Shear Reinforcement (7)		0.58
	EW Direction (7)	Element Set 11 (8)	0.81
	NS Direction (7)		0.94
	Shear Reinforcement (7)		0.65
	EW Direction (7)	Element Set 12 (8)	0.70
	NS Direction (7)		0.71
	Shear Reinforcement (7)		0.66
	EW Direction (7)	Element Set 13 (8)	0.83
	NS Direction (7)		0.68
	Shear Reinforcement (7)		0.29
	EW Direction (7)	Element Set 14 (8)	0.68
	NS Direction (7)		0.75
	Shear Reinforcement (7)		0.19
	EW Direction (7)	Element Set 15 (8)	0.83
	NS Direction (7)		0.70
	Shear Reinforcement (7)		0.19

Table 2.2.1-5 (6 of 8)

Critical Sections	Design Attributes Ratio(R) ≤ Demand/Capacity		
Auxiliary Building (AB)			
North wall of north MSIV house (column line AK, column line 17 to 20)	Horizontal Direction (7)	Zone 1 Elevation 55'-0" to 100'-0"	0.97
	Vertical Direction (7)		0.85
	Shear Reinforcement (7)		0.75
	Horizontal Direction (7)	Zone 2 Elevation 100'-0" to 120'-0"	0.84
	Vertical Direction (7)		0.86
	Shear Reinforcement (7)		0.31
	Horizontal Direction (7)	Zone 3 Elevation 120'-0" to 137'-6"	0.78
	Vertical Direction (7)		0.66
	Shear Reinforcement (7)		N/A
North wall of north MSIV house (column line AK, column line 17 to 20)	Horizontal Direction (7)	Zone 4 Elevation 137'-6" to 174'-0"	0.40
	Vertical Direction (7)		0.46
	Shear Reinforcement (7)		0.22
North wall of north AFWST (column line AJ, column line 15 to 22)	Horizontal Direction (7)	Zone 1 Elevation 100'-0" to 137'-6"	0.76
	Vertical Direction (7)		0.71
	Shear Reinforcement (7)		N/A
West wall of MCR (column line AE to AG, column line 12)	Horizontal Direction (7)	Zone 1 Elevation 55'-0" to 100'-0"	0.85
	Vertical Direction (7)		0.77
	Shear Reinforcement (7)		0.70
	Horizontal Direction (7)	Zone 2 Elevation 100'-0" to 137'-6"	0.83
	Vertical Direction (7)		0.87
	Shear Reinforcement (7)		N/A
	Horizontal Direction (7)	Zone 3 Elevation 137'-6" to 156'-0"	0.94
	Vertical Direction (7)		0.80
	Shear Reinforcement (7)		N/A
	Horizontal Direction (7)	Zone 4 Elevation 156'-0" to 174'-0"	0.82
	Vertical Direction (7)		0.52
	Shear Reinforcement (7)		0.61
	Horizontal Direction (7)	Zone 5 Elevation 174'-0" to 195'-0"	0.91
	Vertical Direction (7)		0.72
	Shear Reinforcement (7)		N/A

Table 2.2.1-5 (7 of 8)

Critical Sections	Design Attributes Ratio(R) ≤ Demand/Capacity		
West wall of SFP (column line AF to AH, column line 23)	Horizontal Direction (7)	Zone 1 Elevation 114'-0" to 156'-0"	0.80
	Vertical Direction (7)		0.78
	Shear Reinforcement (7)		0.61
East wall of FHA (column line AF to AK, column line 26)	Horizontal Direction (7)	Zone 1 Elevation 156'-0" to 174'-0"	0.66
	Vertical Direction (7)		0.46
	Shear Reinforcement (7)		0.20
	Horizontal Direction (7)	Zone 2 Elevation 174'-0" to 213'-6"	0.79
	Vertical Direction (7)		0.63
	Shear Reinforcement (7)		N/A
Floor slab of EDG-1 room at Elevation 100 ft.	EW Direction (7)	Top Layer	0.54
		Bottom Layer	0.60
	NS Direction (7)	Top Layer	0.82
		Bottom Layer	0.44
Floor slab of EDG-2 room at Elevation 100 ft.	EW Direction (7)	Top Layer	0.78
		Bottom Layer	0.99
	NS Direction (7)	Top Layer	0.78
		Bottom Layer	0.78
Bottom Slab of SFP at Elevation 114 ft.	EW Direction (7)	Top Layer	0.93
		Bottom Layer	0.93
	NS Direction (7)	Top Layer	1.00
		Bottom Layer	1.00
Floor slab of MSE at Elevation 137 ft. 6 in	EW Direction (7)	Top Layer	0.75
		Bottom Layer	0.46
	NS Direction (7)	Top Layer	0.49
		Bottom Layer	0.68

Table 2.2.1-5 (8 of 8)

Critical Sections	Design Attributes Ratio(R) ≤ Demand/Capacity	
Emergency Diesel Generator Building (EDGB)		
West wall, Elevation 100 ft. to 135 ft.	Horizontal Direction (7)	0.75
	Vertical Direction (7)	0.86
Center wall, Elevation 100 ft. to 135 ft.	Horizontal Direction (7)	0.41
	Vertical Direction (7)	0.91
Basemat, Elevation 100 ft	E-W Direction (7)	0.67
	N-S Direction (7)	0.93
	Shear Bar (7)	0.48

Note

(1) For containment reinforcement : calculated demand stress vs allowable stress for mechanical load combination followed by mechanical plus thermal load combination

(2) For liner plate : calculated demand stress vs allowable stress for construction case

(3) For liner plate : calculated demand strain vs allowable strain

(4) For liner anchorage : calculated demand displacement vs allowable displacement

(5) For containment reinforcement : calculated demand stress vs allowable stress for service load combination followed by factored load combination

(6) For containment reinforcement : required reinforcement area vs provided reinforcement area for service load combination followed by factored load combination

(7) For reinforcement in other concrete structure : required reinforcement area vs provided reinforcement area

(8) The element sets of the auxiliary building basemat are composed as the following figure :

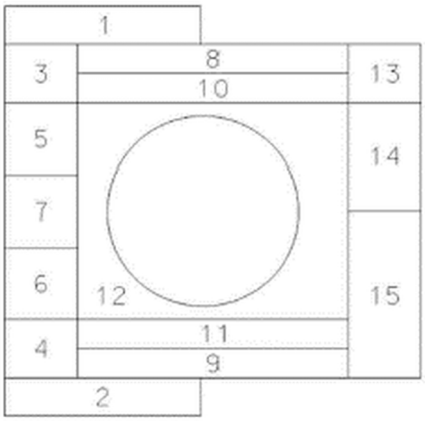

(9) For containment internal structure reinforcement : required reinforcement area vs provided reinforcement area for each face

Table 2.2.1-6

Principal Codes and Standards

Document Designation	Edition	Document Title
ASME CC	2001 with 2003 Addenda	Code for Concrete Containment
ACI 349	1997	Code requirements for nuclear safety related concrete structure
ANSI/AISC N690	1994 including Supp. 2(2004)	Specification for the Design, Fabrication and Erection of Steel Safety-Related Structures for Nuclear Facilities
ASME NE	2007 with 2008 Addenda	Class MC Components
ACI 117	2010	Specification for Tolerances for Concrete Construction and Materials and Commentary
ANSI/AISC 303	2010	Code of Standard Practice for Steel Buildings and Bridges

Abbreviation

ACI American Concrete Institute
AISC American Institute of Steel Construction
ASME American Society of Mechanical Engineers
ANSI American National Standard Institute

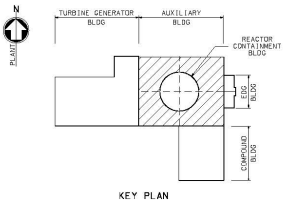

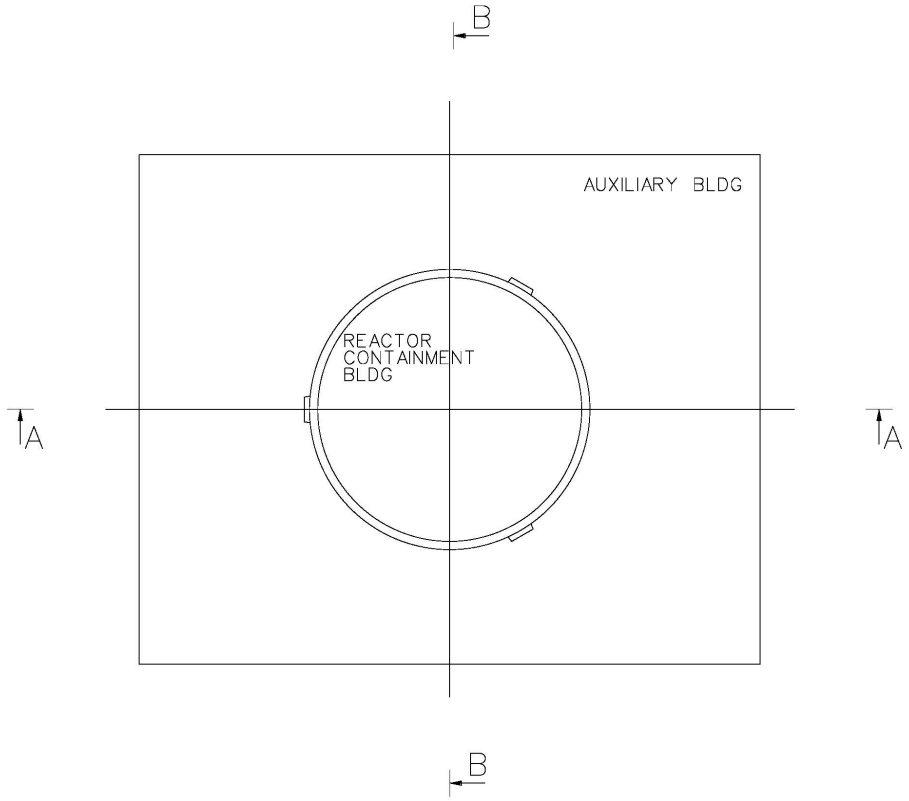

Figure 2.2.1-1 Nuclear Island Structure Plan View

Security-Related Information – Withhold Under 10 CFR 2.390

Figure 2.2.1-2 Nuclear Island Structure Section A-A

Security-Related Information – Withhold Under 10 CFR 2.390

Figure 2.2.1-3 Nuclear Island Structure Section B-B

Security-Related Information – Withhold Under 10 CFR 2.390

Figure 2.2.1-4 Nuclear Island Structure Plan at Level 1

Security-Related Information – Withhold Under 10 CFR 2.390

Figure 2.2.1-5 Nuclear Island Structure Plan at Level 2

Security-Related Information – Withhold Under 10 CFR 2.390

Figure 2.2.1-6 Nuclear Island Structure Plan at Level 3

Security-Related Information – Withhold Under 10 CFR 2.390

Figure 2.2.1-7 Nuclear Island Structure Plan at Level 4

Security-Related Information – Withhold Under 10 CFR 2.390

Figure 2.2.1-8 Nuclear Island Structure Plan at Level 5

Security-Related Information – Withhold Under 10 CFR 2.390

Figure 2.2.1-9 Nuclear Island Structure Plan at Level 6

Security-Related Information – Withhold Under 10 CFR 2.390

Figure 2.2.1-10 Nuclear Island Structure Plan at Level 7

Security-Related Information – Withhold Under 10 CFR 2.390

Figure 2.2.1-11 Nuclear Island Structure Plan at Roof

Security-Related Information – Withhold Under 10 CFR 2.390

Figure 2.2.1-12 Reactor Containment Building Section A-A

Security-Related Information – Withhold Under 10 CFR 2.390

Figure 2.2.1-13 Reactor Containment Building Section B-B

2.2.2 Emergency Diesel Generator Building

2.2.2.1 Design Description

The emergency diesel generator (EDG) building block is located adjacent to east side of the Nuclear Island with seismic isolation gap, and comprises two buildings, one that houses additional two generators and the other for the diesel fuel oil tank (DFOT). Both EDG and DFOT buildings are single-story structures which are composed of reinforced concrete basemat, shearwalls and slabs. The two basemats are horizontally separated by seismic isolation gap.

The EDB building block is designed in accordance with the requirements of ACI 349 and ANSI/AISC N690 as described in the Table 2.2.1-6.

The tolerances for the dimensions in Table 2.2.2-1 and Figures 2.2.2-1 through 2.2.2-2 shall be in accordance with ACI 117(2010 edition) for concrete structures and ANSI/AISC 303(2010 edition) for structural steel members/structures. Any provisions in these codes which provide acceptance criteria for conditions when tolerances are exceeded shall not apply, but a licensee referencing the APR1400 DCD may deviate from the tolerances in these codes using alternative acceptance criteria, if these acceptance criteria are approved by the NRC. As-built dimensions will also be evaluated to verify compliance with the design bases and applicable codes and standards identified in Table 2.2.1-6.The EDG building block, including the critical sections and design attributes listed in Table 2.2.1-5, is designed and constructed to withstand the structural design basis loads associated with:

1. Normal plant operation (including dead loads, live loads, lateral earth pressure loads, and equipment loads, including the effects of temperature and equipment vibration)

2. External events (including rain, snow, wind, flood, tornado or hurricane, tornado or hurricane generated missiles, and earthquake)

3. Internal events (including flooding, pipe rupture, equipment failure, and equipment failure generated missile)

    a) The basic configuration of the EDG building block is as shown in Figures 2.2.2-1 and 2.2.2-2.

b) The EDG building block is designed and constructed to withstand the structural design basis loads.

c) The dimensions and elevations of the EDG building block are as described in Table 2.2.2-1, Figure 2.2.2-1 and Figure 2.2.2-2.

d) The EDG building block is designed and constructed in accordance with the applicable codes and standards listed in Table 2.2.1-6.

e) The critical sections and design attributes of the EDG building block are in accordance with Table 2.2.1-5.

2.2.2.2 Inspection, Test, Analyses, and Acceptance Criteria

The inspections, tests, analyses, and associated acceptance criteria for the EDG building block are specified in Table 2.2.2-2.

Table 2.2.2-1

Definition of Wall and Floor Thicknesses for Emergency Diesel Generator Building

Wall or Section Description	Column Lines	Floor Elevation or Elevation Range	Concrete Thickness	Applicable Radiation Shielding Wall (Yes/No)
EDG Building				
Basemat	Not Applicable	100'-0"	4'-0"	No
Column Line 26.1 Wall	From AC.8 to AH.2	From 100'-0" to 135'-0"	3'-0"	No
Column Line 28 Wall	From AC.8 to AH.2	From 100'-0" to 135'-0"	3'-0"	No
Column Line AC.8 Wall	From 26.1 to 28	From 100'-0" to 135'-0"	3'-0"	No
Column Line AF Wall	From 26.1 to 28	From 100'-0" to 135'-0"	2'-6"	No
Column Line AH.2 Wall	From 26.1 to 28	From 100'-0" to 135'-0"	3'-0"	No
Floors	Not Applicable	121'-6"	2'-0"	No
Floors	Not Applicable	135'-0"	Variable From 1'-6" to 3'-0"	No
DFOT Building				
Basemat	Not Applicable	63'-0"	4'-0"	No
Column Line 26.1 Wall	From AA.1 to AC.6	From 63'-0" to 100'-0"	2'-6"	No
Column Line 27 Wall	From AA.1 to AC	From 63'-0" to 97'-6"	2'-6"	No
Column Line 28 Wall	From AA.1 to AC.6	From 63'-0" to 100'-0"	4'-0"	No
Column Line AA.1 Wall	From 26.1 to 28	From 63'-0" to 97'-6"	4'-0"	No
Column Line AC.6 Wall	From 26.1 to 28	From 63'-0" to 100'-0"	4'-0"	No
Floors	Not Applicable	97'-6"	2'-0"	No
Floors	Not Applicable	100'-0"	3'-0"	No

Table 2.2.2-2

Emergency Diesel Generator Building Block (1) ITAAC

Design Commitment	Inspections, Tests, Analyses	Acceptance Criteria
1. The basic configuration of the EDG building block is as shown in Figures 2.2.2-1 and 2.2.2-2.	1. Inspection of the basic configuration of the as-built EDG building block will be conducted.	1. The as-built EDG building block conforms with the basic configuration as shown in Figures 2.2.2-1 and 2.2.2-2.
2. The EDG building block is designed and constructed to withstand the structural design basis loads.	2. A structural analysis will be performed to reconcile the as-built EDG building block structure with the structural design basis loads.	2. A report exists and concludes that the as-built EDG building block can withstand the structural design basis loads.
3. The dimensions and elevations of the EDG building block are as described in Table 2.2.2-1, Figure 2.2.2-1 and 2.2.2-2.	3. .Inspection will be performed of the dimensions and elevations of the as-built EDG building block.	3. A report exists and concludes that the as-built dimensions and elevations of the EDG building block are as described in Table 2.2.2-1, Figure 2.2.2-1 and 2.2.2-2.
4. The EDG building block is designed and constructed in accordance with the applicable codes and standards listed in Table 2.2.1-6.	4. An analysis will be performed for any deviations from the applicable codes and standards listed in Table 2.2.1-6.	4. A report exists and concludes that the EDG building block is designed and constructed in accordance with the applicable codes and standards listed in Table 2.2.1-6.
5. The critical sections and design attributes of the EDG building block are in accordance with Table 2.2.1-5.	5. A review of the as-built design and construction documentation will be performed to verify the critical sections and design attributes are in accordance with Table 2.2.1-5.	5. A reports exists and concludes the critical sections and design attributes of the EDG building block are in accordance with Table 2.2.1-5.

(1) EDG building block includes EDG building and DFOT building.

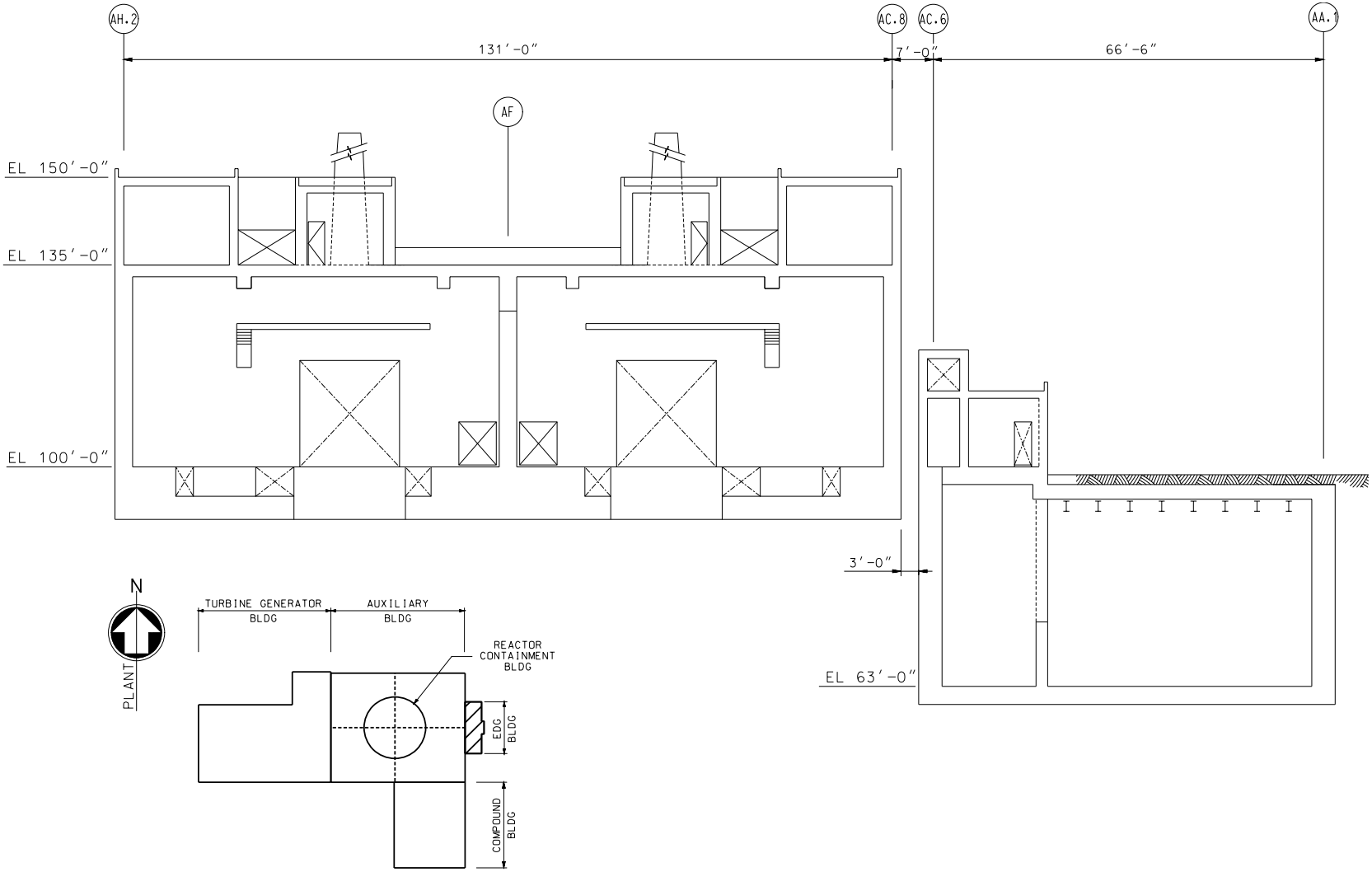

Figure 2.2.2-1 Emergency Diesel Generator Building Block Section

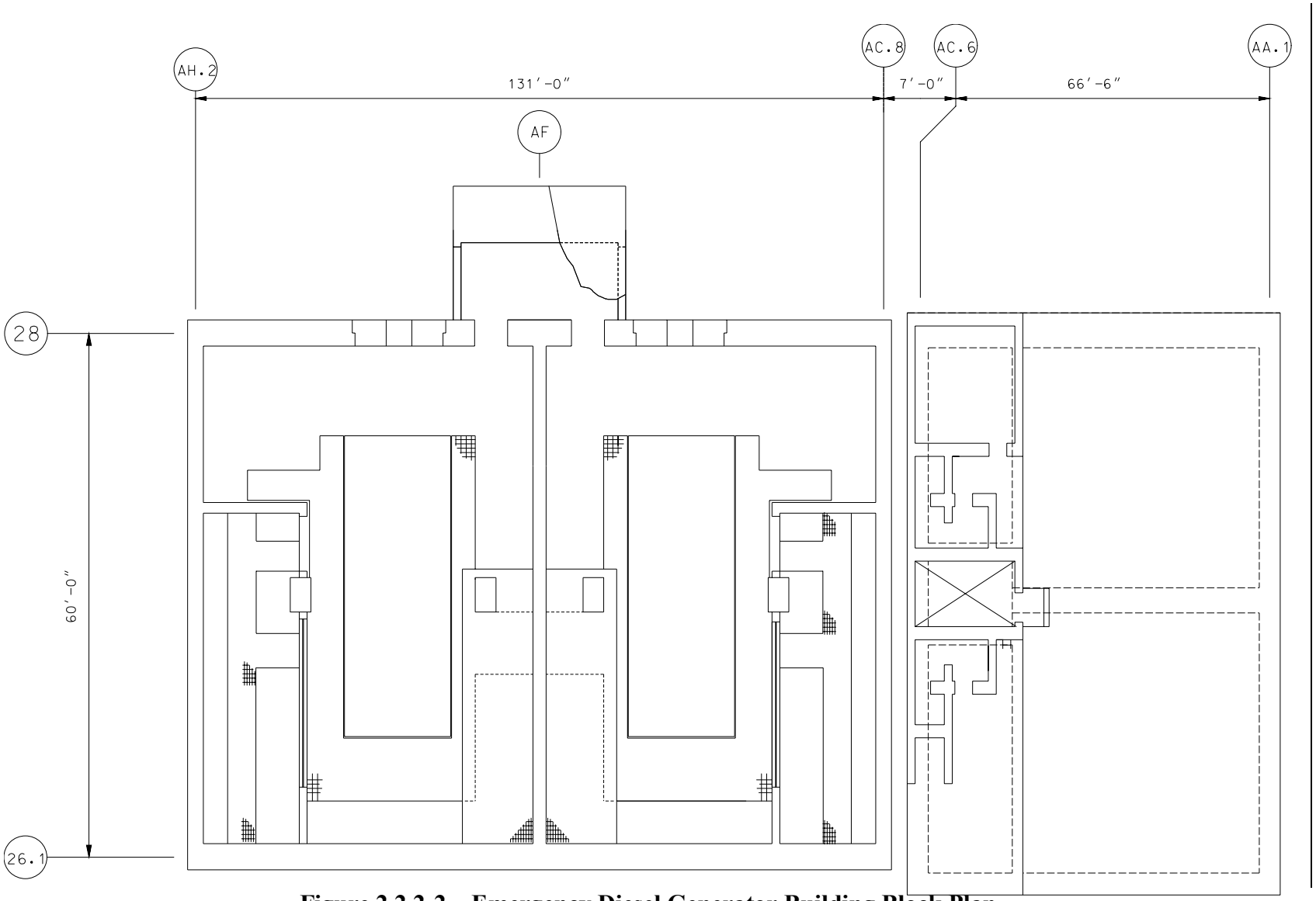

Figure 2.2.2-2 Emergency Diesel Generator Building Block Plan

2.2.3 Turbine Generator Building

2.2.3.1 Design Description

The turbine generator building is a non-safety-related seismic Category II structure located adjacent to the auxiliary building that houses the high pressure turbine, low pressure turbine, and generator driven with high temperature and pressure steam which is generated from steam generator, and also houses some related auxiliary system. The building is composed of basemat, underground shear wall, turbine generator pedestal, and superstructure, and is supported by a reinforced concrete foundation which is separated from the adjacent auxiliary building structures.

1. The seismic Category II turbine generator building structure does not impair the ability of the safety-related SSCs to perform their safety-related functions during or following an SSE.

2.2.3.2 Inspection, Test, Analyses, and Acceptance Criteria

The inspections, tests, analyses, and associated acceptance criteria for the turbine generator building is specified in Table 2.2.3-1.

Table 2.2.3-1

Turbine Generator Building ITAAC

Design Commitment	Inspections, Tests, Analyses	Acceptance Criteria
1. The seismic Category II turbine generator building structure does not impair the ability of the safety-related SSCs to perform their safety-related functions during or following an SSE.	1. Analyses and inspections of the design and as-built configuration of the seismic Category II turbine generator building structure will be performed to verify that the turbine generator building structure does not impair the ability of the safety-related SSCs to perform their safety-related functions during or following an SSE.	1. A report exists and concludes that the as-built seismic Category II turbine generator building structure does not impair the ability of the safety-related SSCs to perform their safety-related functions during or following an SSE.

2.2.4 Compound Building

2.2.4.1 Design Description

The compound building is a non-safety-related seismic Category II reinforced concrete structure which is located adjacent to the auxiliary building. The compound building houses the access control area, the hot machine shop, the radwaste treatment and drum removal areas, and the operation support center (OSC). The building is composed of reinforced concrete shear walls, interior walls, concrete slabs, girders and columns. The exterior shear walls and roof slabs play a role as a radiation shielding and missile protection.

1. The seismic Category II compound building structure does not impair the ability of the safety-related SSCs to perform their safety-related functions during or following an SSE.

2.2.4.2 Inspection, Test, Analyses, and Acceptance Criteria

The inspections, tests, analyses, and associated acceptance criteria for the compound building is specified in Table 2.2.4-1.

Table 2.2.4-1

Compound Building ITAAC

Design Commitment	Inspections, Tests, Analyses	Acceptance Criteria
1. The seismic Category II compound building structure does not impair the ability of the safety-related SSCs to perform their safety-related functions during or following an SSE.	1. Analyses and inspections of the design and as-built configuration of the seismic Category II compound building structure will be performed to verify that the compound building structure does not impair the ability of the safety-related SSCs to perform their safety-related functions during or following an SSE.	1. A report exists and concludes that the as-built seismic Category II compound building structure does not impair the ability of the safety-related SSCs to perform their safety-related functions during or following an SSE.

2.2.5 Protection against Hazards

2.2.5.1 Design Descriptions

2.2.5.1.1 External Flooding

The NI structures and EDG building block are designed to withstand the external flooding. The safety-related SSCs housed in the structures are ascertained to maintain their safety functions during the external flooding condition.

The as-built NI structures and EDG structure have the following protective provisions against external flooding hazards

1. The external walls below the postulated flood level or groundwater level have a thickness of greater than or equal to 0.60 m (2 ft) to prevent in-leakage.

2. The penetrations in the exterior walls below the postulated flood level or groundwater level are water sealed.

3. Water stops are installed at all construction joints of the exterior walls and basemats below the postulated flood level or groundwater level to prevent seepage into the structures.

2.2.5.1.2 Internal Flooding

The safety-related components are protected from the effect of internal flooding due to postulated piping failure. The internal flooding sources are considered high-energy or moderate-energy piping failure, non-seismically designed component or tank failure, including the operation of fire protection system.

The design considerations such as plant arrangement, physical or distance separation, flood barrier including watertight doors and various openings and penetrations are applied to satisfy the design concepts on the internal flooding protection. Openings and penetrations through flood barriers are minimized and the safety-related equipment are located above the internal flood level so that flooding events do not affect them.

The as-built RCB, AB (except the lowest floor at El. 55 ft), EDG building, ESW building, and the CCW HX building have the following protective provisions against internal flooding hazards.

1. Divisional flood barriers are provided that protect against the internal flooding.

2. Watertight doors are provided that protect against internal flooding.

3. Penetrations in the flood barrier are sealed up to internal design flood levels and, in addition, penetrations in the divisional walls are at least 2.5 m above the floor.

4. Safety-related electrical, instrumentation and control equipment are located above the internal design flood level and at least 20 cm above the floor surface.

2.2.5.1.3 Fire Barrier

The plant is subdivided into separate fire areas by fire-rated barriers, i.e., walls, floors, and ceilings, to confine the effects of fire hazards to a single area, thereby minimizing the potential for adverse effects from fires on redundant SSC important to safety.

The protective provisions against fire hazards are as follows:

1. The redundant trains of systems, components and cables important to safety, except for the control room complex and inside containment, are separated from each other by fire barriers having a 3-hour rating.

2. Openings and penetrations through fire barriers are protected by components(such as fire doors, fire dampers, penetration seals) having fire resistance equivalent to that of the barrier.

3. MCR complex and RSR are separated from each other and other fire areas by 3-hour rated fire barriers.

4. Fire and smoke barriers exist to keep any radiological releases from a fire within the exposure criteria of 10 CFR Part 20.

2.2.5.1.4 Internally Generated Missiles (Inside and Outside Containment)

Missile protection is provided for safety-related equipment so that internally generated missiles do not cause the release of significant amount of radioactivity or prevent the safe and orderly shutdown of the reactor.

Safety-related equipment and components in the as-built RCB, AB, EDG building, ESW building, and the CCW HX building are protected against internally generated missiles by one or more of the following:

1. Design features to prevent the generation of missiles
2. Orientation of missile sources to prevent missiles from striking safety-related equipment and components
3. Local shields and barriers protect the safety-related equipment and components4. Safety-related equipment and components are designed to withstand the impact of missiles

2.2.5.2 Inspection, Tests, Analyses, and Acceptance Criteria

The inspection, tests, analyses, and associated acceptance criteria for protection against hazards are specified in Table 2.2.5-1.

Table 2.2.5-1 (1 of 4)

Protection against Hazards ITAAC

Design Commitment	Inspections, Tests, Analyses	Acceptance Criteria
1. The as-built NI structure and EDG structure have the following protective provisions against external flooding hazards: - The external walls below the postulated flood level or groundwater level have a thickness of greater than or equal to 0.60 m (2 ft) to prevent in-leakage. - The penetrations in the exterior walls below the postulated flood level/ or groundwater level are watersealed. - Water stops are installed at all construction joints of the exterior walls and basemats below the postulated flood level or groundwater level to prevent seepage into the structures.	1. Inspection of the as-built protective provisions against external flooding hazards will be conducted.	1. The as-built NI structure and EDG structure conform with the following protective provisions: - The external walls below the postulated flood level or groundwater level have a thickness of greater than or equal to 0.60 m (2 ft) to prevent in-leakage. - The penetrations in the exterior walls below the postulated flood level or groundwater level are watersealed. - Water stops are installed at all construction joints of the exterior walls and basemats below the postulated flood level or groundwater level to prevent seepage into the structures.

Table 2.2.5-1 (2 of 4)

Design Commitment	Inspections, Tests, Analyses	Acceptance Criteria
2. The as-built RCB, AB (except the lowest floor at El. 55ft), EDG building, ESW building, and the CCW HX building have the following protective provisions against internal flooding hazards: - Divisional flood barriers are provided that protect against the internal flooding. - Watertight doors are providedthat protect against internal flooding. - Penetrations in the flood barrier are sealed up to internal design flood levels and, in addition, penetrations in the divisional walls are at least 2.5 m above the floor. - Safety-related equipment and instruments are located above the internal design flood level and at least 20 cm above the floor surface.	2. Inspection of the as-built protective provisions against internal flooding hazards will be conducted.	2. The as-built RCB, AB (except the lowest floor at El. 55 ft), EDG building, ESW building, and the CCW HX building conform with the following criteria to protect against internal flooding: - Divisional flood barriers exist that protect against internal flooding. - Watertight doors exist that protect against internal flooding. - Penetrations in the flood barrier are sealed up to the internal design flood levels and, in addition, penetrations in the divisional walls are at least 2.5 m above the floor. - Safety-related equipment and instruments are located above the internal design flood level and at least 20 cm above the floor surface.

Table 2.2.5-1 (3 of 4)

Design Commitment	Inspections, Tests, Analyses	Acceptance Criteria
3. The protective provisions against fire hazards are as follows: - The redundant trains of systems, components and cables important to safety, except for the control room complex and inside containment, are separated from each other by fire barriers having a 3-hour rating. - Openings and penetrations through fire barriers are protected by components (such as fire doors, fire dampers, penetration seals) having fire resistance equivalent to that of the barrier. - MCR complex and RSR are separated from each other and other fire areas by 3-hour rated fire barriers. - Fire and smoke barriers exist to keep any radiological releases from a fire within the exposure criteria of 10 CFR Part 20.	3. Inspection of the as-built protective provisions against fire hazards will be conducted. - Inspection and analysis will be conducted of the as-built fire and smoke barriers to demonstrate that any radiological releases from a fire will be kept within the exposure criteria of 10 CFR Part 20.	3. The as-builtprotective provisions against fire hazards are as follows: - The redundant trains of systems, components and cables important to safety, except for the control room complex and inside containment, are separated from each other by fire barriers having a 3-hour rating. - Openings and penetrations through fire barriers are protected by components(such as fire doors, fire dampers, penetration seals) having fire resistance equivalent to that of the barrier. - The MCR complex and RSR are separated from each other and other fire areas by 3-hour rated fire barriers. - Fire and smoke barriers exist to keep any radiological releases from a fire within the exposure criteria of 10 CFR Part 20.

Table 2.2.5-1 (4 of 4)

Design Commitment	Inspections, Tests, Analyses	Acceptance Criteria
4. Safety-related equipment and components in the as-built RCB, AB, EDG building, ESW building, and the CCW HX building are protected against internally generated missiles by one or more of the following: - Design features to prevent the generation of missiles - Orientation of missile sources to prevent missiles from striking safety-related equipment and components. - Local shields and barriers protect the safety-related equipment and components - Safety-related equipment and components are designed to withstand the impact of missiles	4. Inspection of the as-built protective provisions against internally generated missiles will be conducted.	4. Safety-related equipment and components in the as-built RCB, AB, EDG building, ESW building, and the CCW HX building are protected against internally generated missiles by one or more of the following: - Design features to prevent the generation of missiles - Orientation of missile sources to prevent missiles from striking safety-related equipment and components- Local shields and barriers protect the safety-related equipment and components - Safety-related equipment and components are designed to withstand the impact of missiles

2.2.6 Reactor Vessel Internals

2.2.6.1 Design Description

The reactor vessel internals consist of a core support barrel (CSB) assembly and an upper guide structure (UGS) assembly. The reactor vessel internals are safety-related.

The CSB assembly is suspended from the reactor vessel flange. The CSB assembly provides support and location positioning for the fuel assembly lower end fittings. The CSB assembly contains structural elements that provide an instrumentation guide path from the lower vessel, and hydraulic flow paths through the vessel from the inlet nozzles to the upper end of the fuel assemblies.

The CSB assembly contains a grid structure which supports the core and provides flow distribution from the lower plenum region to the bottom of the fuel assemblies. The core shroud is part of the CSB assembly and provides an envelope to direct the primary coolant flow through the core. Instrumentation nozzles in the grid structure provide a guide path for in-core instrumentation from the reactor vessel lower head to the fuel assemblies.

The UGS assembly is supported by the CSB upper flange and extends into the CSB assembly to engage the top of the fuel assemblies. The UGS assembly provides an insertion path for the control element assemblies (CEA). The UGS assembly contains structural elements which provide both a guide path and lateral support for the upper portion of the CEA and extensions shafts in the reactor vessel upper plenum region. The UGS assembly also provides guide paths for heated junction thermocouple (HJTC) assemblies.

1. The functional arrangement of the reactor vessel internals is as described in the Design Description of Subsection 2.2.6.1 and in Table 2.2.6-1 and as shown in Figures 2.2.6-1 and 2.2.6-2.

2. The ASME Code components identified in Table 2.2.6-1 are designed and constructed in accordance with ASME Section III Subsection NG requirements.

3. The seismic Category I components identified in Table 2.2.6-1 can withstand seismic design basis loads without loss of safety function.

4. The reactor vessel internals withstand the effects of flow induced vibration caused by the operation of the reactor coolant pumps.

2.2.6.2 Inspections, Tests, Analyses, and Acceptance Criteria

Table 2.2.6-2 specifies the inspections, tests, analyses, and associated acceptance criteria for the reactor vessel internals.

Table 2.2.6-1

Identification of Reactor Vessel Internals

Component Name	Location	ASME Section III Class	Seismic Category
Core Support Barrel Assembly (1)	Reactor Containment Building	CS	I
Upper Guide Structure Assembly (1)	Reactor Containment Building	CS	I

(1) Core Support Structures (CS) only

Table 2.2.6-2 (1 of 2)

Reactor Vessel Internals ITAAC

Design Commitment	Inspections, Tests, Analyses	Acceptance Criteria
1. The functional arrangement of the reactor vessel internals is as described in the Design Description of Subsection 2.2.6.1 and in Table 2.2.6-1 and as shown in Figures 2.2.6-1 and 2.2.6-2.	1. Inspection of the as-built reactor vessel internals will be performed.	1. The as-built reactor vessel internals conform with the functional arrangement as described in the Design Description of Subsection 2.2.6.1 and in Table 2.2.6-1 and as shown in Figures 2.2.6-1 and 2.2.6-2.
2. The ASME Code components identified in Table 2.2.6-1 are designed and constructed in accordance with ASME Section III Subsection NG requirements.	2. Inspection of the as-built ASME Code components identified in Table 2.2.6-1 will be performed and documented in the ASME data report(s).	2. The ASME Section III data report(s) exist and conclude that the as-built ASME Code components identified in Table 2.2.6-1 are designed and constructed in accordance with ASME Section III Subsection NG requirements.
3. The seismic Category I components identified in Table 2.2.6-1 can withstand seismic design basis loads without loss of safety function.	3.a Inspections will be performed to verify that the as-built seismic Category I components are located in the seismic Category I structure.	3.a The as-built seismic Category I components identified in Table 2.2.6-1 are located in the seismic Category I structure.
	3.b Type tests, analyses or a combination of type tests and analyses of seismic Category I components will be performed .	3.b A report exists and concludes that the seismic Category I components identified in Table 2.2.6-1 can withstand seismic design basis loads without loss of safety function.
	3.c Inspections will be performed to verify that the as-built seismic Category I components are seismically bounded by the tested or analyzed conditions.	3.c A report exists and concludes that the as-built seismic Category I components identified in Table 2.2.6-1 are seismically bounded by the tested or analyzed conditions.

Table 2.2.6-2 (2 of 2)

Design Commitment	Inspections, Tests, Analyses	Acceptance Criteria
4. The reactor vessel internals withstand the effects of flow induced vibration caused by the operation of the reactor coolant pumps.	4. A hot functional test will be performed. Inspection of the reactor vessel internals will be performed both before and after the hot functional test.	4. The reactor vessel internals retain their integrity with no observable damage or loose parts.

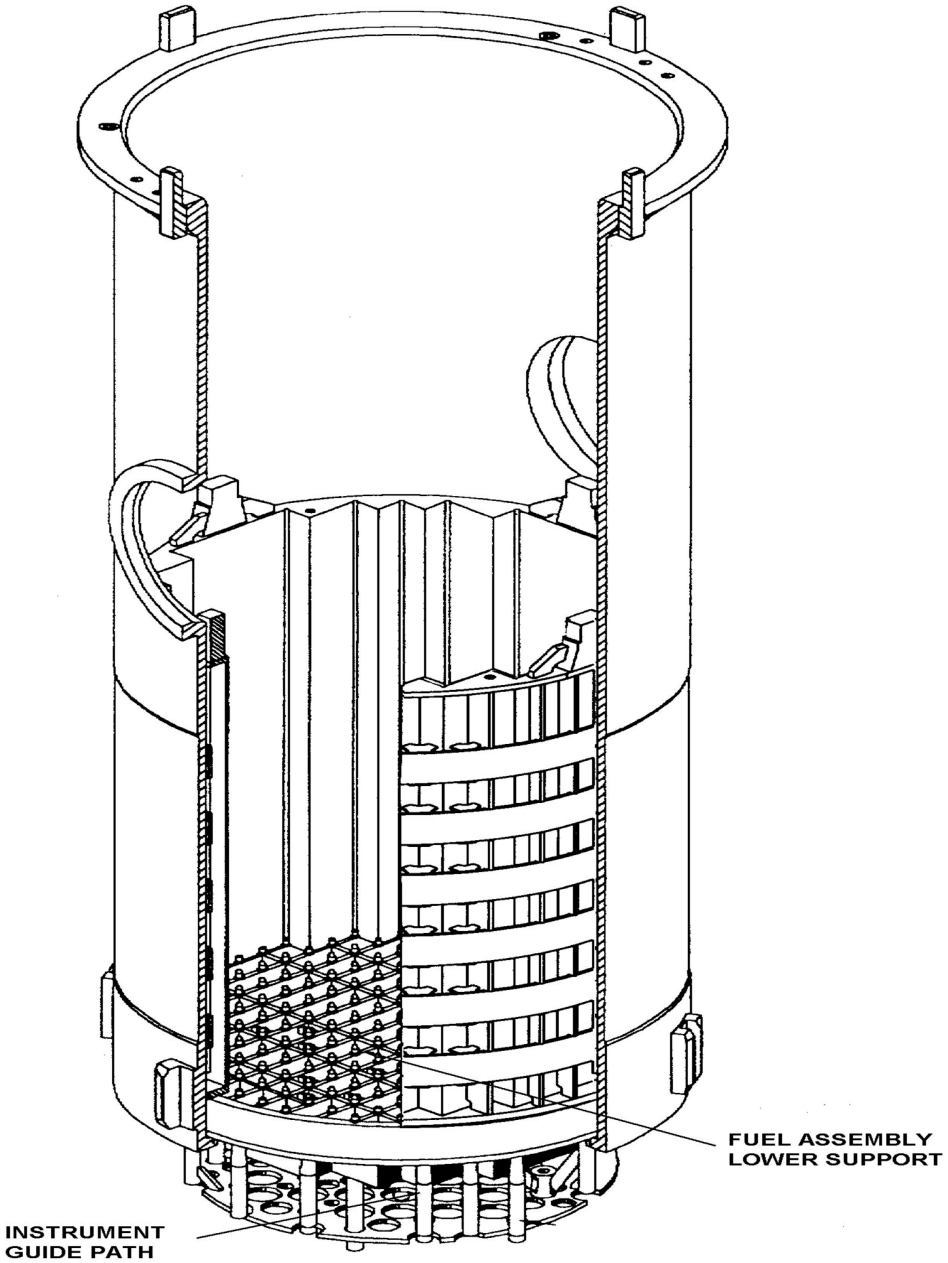

Figure 2.2.6-1 Core Support Barrel Assembly

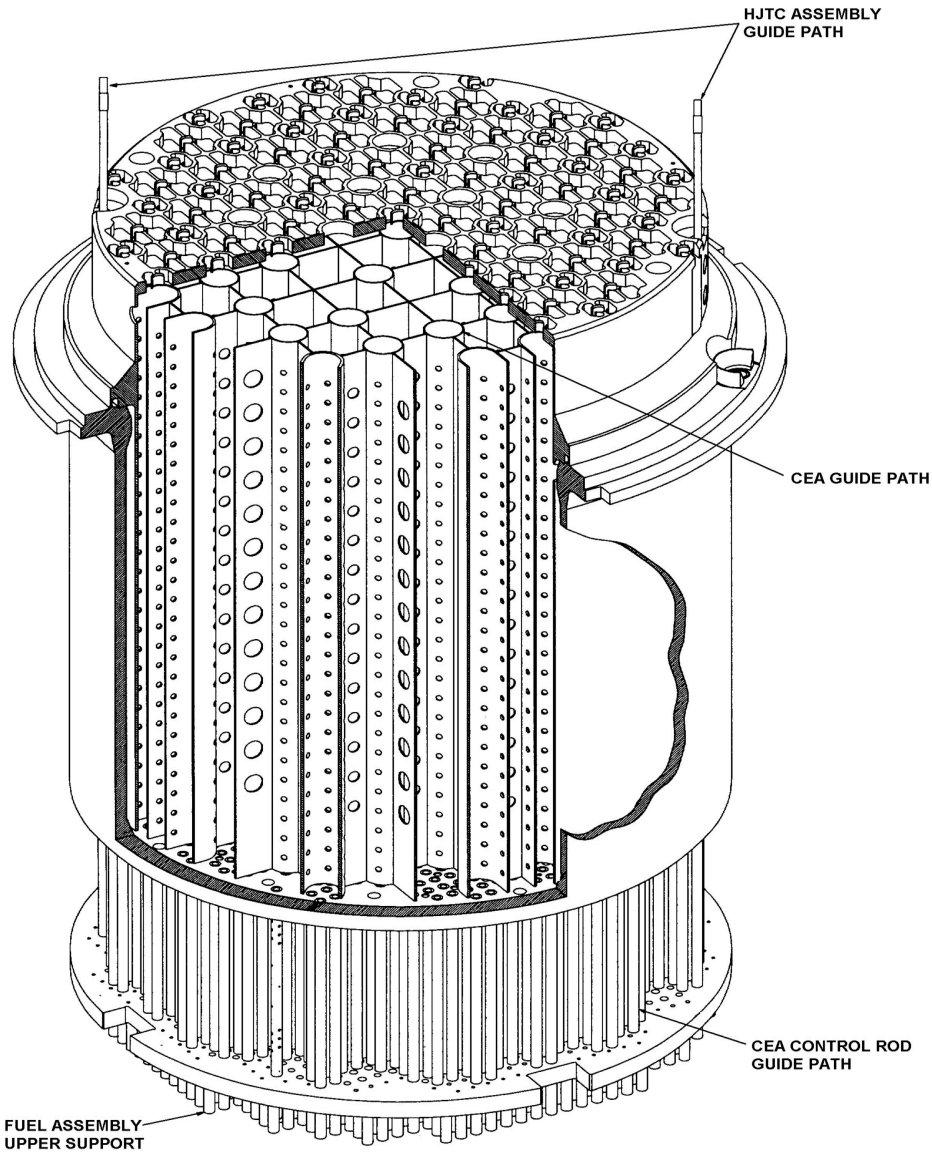

Figure 2.2.6-2 Upper Guide Structure Assembly

2.2.7 In-core Instrument Guide Tube System

2.2.7.1 Design Description

The in-core instrument (ICI) guide tube system is safety-related and consists of guide tubes, supports, seal housings and a seal table.

The ICI guide tubes serve as a guide path and provide support for the in-core instrument assemblies. The ICI guide tubes connect to the bottom of the reactor vessel and terminate in a seal housing assembly located at the seal table. Pressure retaining seals are installed between the seal housing and the in-core instrument assembly at the seal housing.

The ICI guide tube supports and seal table support the ICI guide tubes and provide spacing between tubes. The seal table also seals the ICI chase from water ingress during refueling.

1. The functional arrangement of the ICI guide tubes, seal housings, supports, and seal table is as described in the Design Description of Subsection 2.2.7.1 and in Table 2.2.7-1 and as shown in Figure 2.2.7-1.

2. The ASME Code components identified in Table 2.2.7-1 are designed and constructed in accordance with ASME Section III requirements.

3. The ICI guide tubes and seal housings identified in Table 2.2.7-1 retain their pressure boundary integrity at their design pressure.

4. The seismic Category I components identified in Table 2.2.7-1, including the supports and anchorages, can withstand seismic design basis loads without loss of safety function.

2.2.7.2 Inspection, Test, Analyses, and Acceptance Criteria

Table 2.2.7-2 specifies the ITAAC for the ICI guide tube system.

Table 2.2.7-1

Identification of ICI Guide Tube System

Component Name	Location	ASME Section III Class	Seismic Category
ICI Guide Tube Supports	Reactor Containment Building	1	I
ICI Guide Tube	Reactor Containment Building	1	I
ICI Seal Housing	Reactor Containment Building	1	I
ICI Seal Table	Reactor Containment Building	1	I

Table 2.2.7-2 (1 of 2)

ICI Guide Tube System ITAAC

Design Commitment	Inspections, Tests, Analyses	Acceptance Criteria
1. The functional arrangement of the ICI guide tubes, seal housings, supports and seal table is as described in the Design Description of Subsection 2.2.7.1 and in Table 2.2.7-1 and as shown in Figure 2.2.7-1.	1. Inspection of the as-built ICI guide tube system will be performed.	1. The as-built ICI guide tube system conforms with the functional arrangement as described in the Design Description of Subsection 2.2.7.1 and in Table 2.2.7-1 and as shown in Figure 2.2.7-1.
2. The ASME Code components identified in Table 2.2.7-1 are designed and constructed in accordance with ASME Section III requirements.	2. Inspection of the as-built ASME Code components identified in Table 2.2.7-1 will be performed and documented in the ASME data report(s).	2. The ASME Section III data report(s) exist and conclude that the as-built ASME Code components identified in Table 2.2.7-1 are designed and constructed in accordance with ASME Section III requirements.
3. The ICI guide tubes and seal housings identified in Table 2.2.7-1 retain their pressure boundary integrity at their design pressure.	3. A hydrostatic test will be conducted on the as-built components required to be hydrostatically tested by the ASME Section III.	3. A report exists and concludes that the results of the hydrostatic test of the as-built components identified in Table 2.2.7-1 conform with the ASME Section III requirements.

Table 2.2.7-2 (2 of 2)

Design Commitment	Inspections, Tests, Analyses	Acceptance Criteria
4. The seismic Category I components identified in Table 2.2.7-1, including the supports and anchorages, can withstand seismic design basis loads without loss of safety function.	4.a Inspections will be performed to verify that the as-built seismic Category I components are located in the seismic Category I structure.	4.a The as-built seismic Category I components identified in Table 2.2.7-1 are located in the seismic Category I structure.
	4.b Type tests, analyses or a combination of type tests and analyses of seismic Category I components will be performed.	4.b A report exists and concludes that the seismic Category I components identified in Table 2.2.7-1 can withstand seismic design basis loads without loss of safety function.
	4.c Inspections will be performed to verify that the as-built seismic Category I components , including the supports and anchorages, are seismically bounded by the tested or analyzed conditions.	4.c A report exists and concludes that the as-built seismic Category I components identified in Table 2.2.7-1, including the supports and anchorages, are seismically bounded by the tested or analyzed conditions.

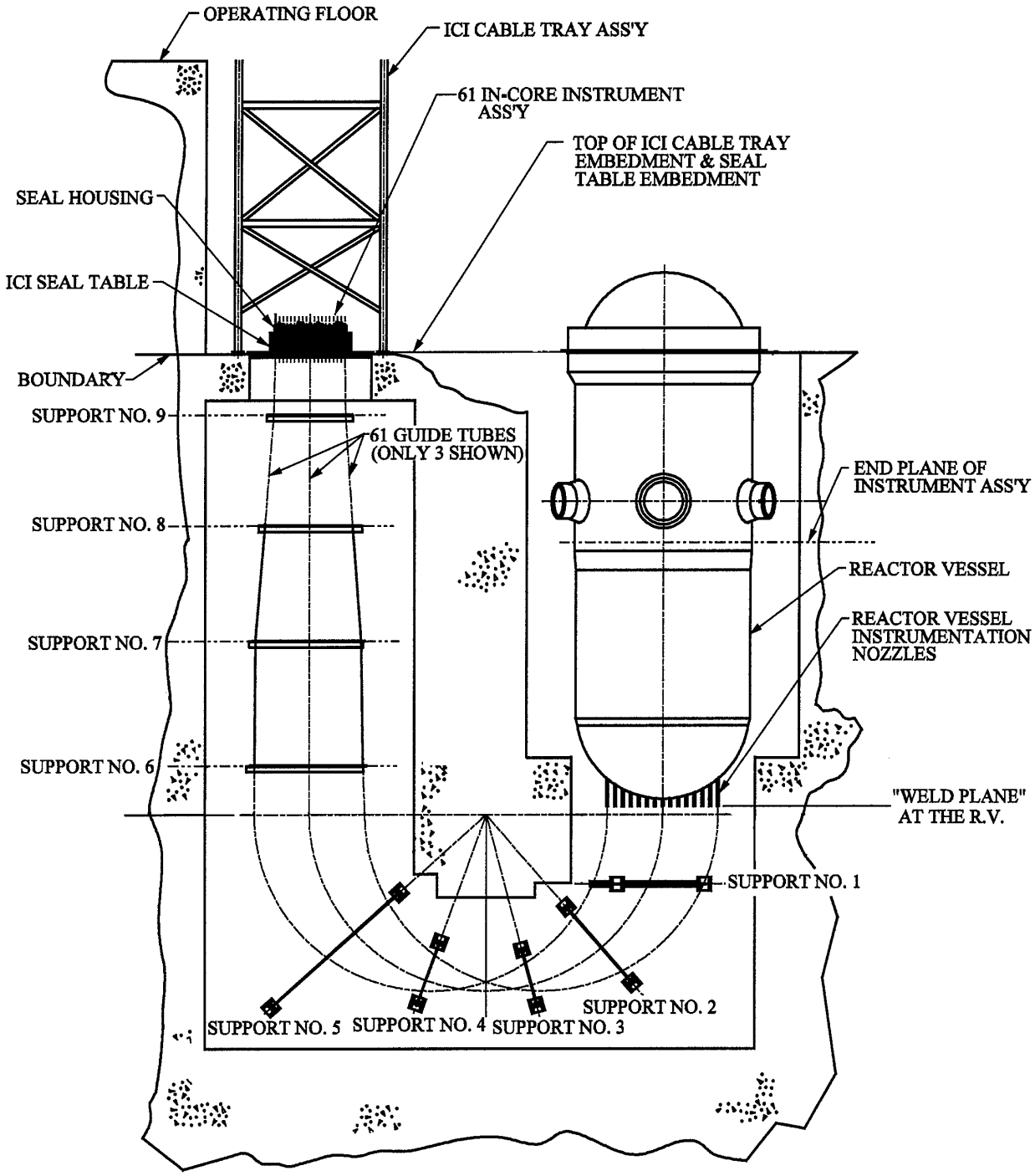

Figure 2.2.7-1 Configuration of ICI Guide Tube System

2.2.8 Essential Service Water Building

2.2.8.1 Design Description

The Essential Service Water (ESW) buildings are classified as seismic Category I buildings with a concrete structure. The ESW building houses essential service water pumps, cooling tower, and cooling tower basin. The structure is composed of basemat, floors, roofs, and shear walls. The ESW structure provides pump rooms that are separated by reinforced concrete walls and operating floor in which the equipment are installed.

The ESW building is designed in accordance with the requirements of ACI 349 and ANSI/AISC N690 as described in the Table 2.2.1-6.

The ESW building is designed and constructed to withstand the structural design basis loads associated with:

1. Normal plant operation (including dead loads, live loads, lateral earth pressure loads, and hydrostatic loads, hydrodynamic loads, and temperature loads)

2. External events (including rain, snow, wind, flood, tornado or hurricane, tornado or hurricane generated missiles, and earthquake)

3. Internal events (including internal flooding, pipe rupture, equipment failure, and equipment failure generated missile)

    a) The ESW building is designed and constructed to withstand the structural design basis loads.

    b) The ESW building is designed and constructed in accordance with the applicable codes and standards listed in Table 2.2.1-6.

2.2.8.2 Inspection, Test, Analyses, and Acceptance Criteria

The inspections, tests, analyses, and associated acceptance criteria for the ESW building are specified in Table 2.2.8-1.

Table 2.2.8-1

Essential Service Water Building ITAAC

Design Commitment	Inspections, Tests, Analysis	Acceptance Criteria
1. The Essential Service Water Building is designed and constructed to withstand the structural design basis loads.	1. A structural analysis will be performed to reconcile the as-built ESW structure with the structural design basis loads.	1. A report exists and concludes that the ESW building can withstand the structural design basis loads.
2. The ESW building is designed and constructed in accordance with the applicable codes and standards listed in Table 2.2.1-6.	2. An analysis will be performed for any deviations from the applicable codes and standards listed in Table 2.2.1-6.	2. A report exists and concludes that the ESW building is designed and constructed in accordance with the applicable codes and standards listed in Table 2.2.1-6.

2.2.9 Component Cooling Water Heat Exchanger Building

2.2.9.1 Design Description

The component cooling water (CCW) heat exchanger buildings next to each ESW building are classified as seismic Category I buildings with a concrete structure. The CCW heat exchanger building houses CCW heat exchangers, debris filters. The structure is composed of basemat, floors, roofs, and shear walls. The load resistance of the structure consists of slabs and shear walls combined with concrete columns and beams as the structural elements.

The CCW heat exchanger building is designed in accordance with the requirements of ACI 349 and ANSI/AISC N690 as described in the Table 2.2.1-6.

The CCW heat exchanger building is designed and constructed to withstand the structural design basis loads associated with:

1. Normal plant operation (including dead loads, live loads, lateral earth pressure loads, and equipment loads, including the effects of temperature and equipment vibration)

2. External events (including rain, snow, wind, flood, tornado or hurricane, tornado or hurricane generated missiles, and earthquake)

3. Internal events (including flooding, pipe rupture, equipment failure, and equipment failure generated missile)

   a) The CCW heat exchanger building is designed and constructed to withstand the structural design basis loads.

   b) The CCW heat exchanger building is designed and constructed in accordance with the applicable codes and standards listed in Table 2.2.1-6.

2.2.9.2 Inspection, Test, Analyses, and Acceptance Criteria

The inspections, tests, analyses, and associated acceptance criteria for the CCW heat exchanger building are specified in Table 2.2.9-1.

Table 2.2.9-1

Component Cooling Water Heat Exchanger Building ITAAC

Design Commitment	Inspections, Tests, Analysis	Acceptance Criteria
1. The Component Cooling Water Heat Exchanger building is designed and constructed to withstand the structural design basis loads.	1. A structural analysis will be performed to reconcile the as-built CCW heat exchanger structure with the structural design basis loads.	1. A report exists and concludes that the CCW heat exchanger building can withstand the structural design basis loads.
2. The CCW heat exchanger building is designed and constructed in accordance with the applicable codes and standards listed in Table 2.2.1-6.	2. An analysis will be performed for any deviations from the applicable codes and standards listed in Table 2.2.1-6.	2. A report exists and concludes that the CCW heat exchanger building is designed and constructed in accordance with the applicable codes and standards listed in Table 2.2.1-6.

2.2.10 Seismic Analysis Methods

The seismic Category I safety-related structures of the APR1400 standard plant design are modeled as three-dimensional finite element models to perform seismic analyses for the safe shutdown earthquake. The structures for which seismic analyses are performed are as follows:

The time-history analyses with complex frequency response method considering the soilstructure interaction effects for the generic site conditions are performed to generate the seismic responses of above structures such as story shear forces and in-structure response spectra (ISRS). For structural design of the reactor containment building containment structure and internal structure, the response spectrum analyses with ISRS at the reactor containment building El. 78'-0" are performed to determine design member forces and moments due to seismic loads. For structural design of the auxiliary building, emergency diesel generator building and diesel fuel oil storage tank room, the equivalent static analyses to story shear forces are performed to determine design member forces and moments due to seismic loads.

Table 2.2.10-1 shows the key locations where comparisons of ISRS are needed by a COL applicant if a site-specific seismic analysis evaluation is required. The key locations are locations that are expected to represent the minimum and maximum seismic responses in the structure and include the basemat and roof slab elevations and the support elevation of the major equipment.

Table 2.2.10-1

ISRS Output Locations

Structures	Elevation	Remarks
Reactor Containment Building Internal Structure for primary shield wall and secondary shield wall	78′-0″ 100′-0″ 156′-0″ 191′-0″	Basemat elevation Support elevation of major equipment Operation floor elevation Top of internal structure
Reactor Containment Building Containment Structure	104′-0″ 160′-0″ 332′-0"	Ground floor elevation Operation floor elevation Top of dome
Auxiliary Building	55′-0″ 100′-0″ 156′-0″ 213′-0″ 216′-9″	Basemat elevation Ground floor elevation Main control room floor elevation Roof of auxiliary building (1) Roof of auxiliary building (2)
Emergency Diesel Generator Building	100′-0″ 135′-0″	Basemat elevation Roof slab elevation
Diesel Fuel Oil Storage Tank Room	63′-0″ 100′-0″	Basemat elevation Roof slab elevation

2.3 Piping Systems and Components

2.3.1 Design Description

There are four areas related to piping systems and components which are addressed in the certified plant design:

a. Piping stress analysis

b. Analysis of protection against the dynamic effects of piping rupture

c. Evaluation of leak-before-break (LBB)

d. Analysis of component stress

Piping Stress Analysis

The analysis and design of piping and piping supports are in accordance with the requirements of the ASME Section III based on Code classification and ASME Service Level. The piping stress analysis is based on the requirements of ASME Section III Subsections NB (Class 1), NC (Class 2), or ND (Class 3). Stress analysis of piping and supports considers design basis loads and load combinations applicable to each system. ASME Section III Class 1 piping subject to fatigue analysis in both air and reactor coolant environment is evaluated for failure over the design life of the plant.

Analysis of Protection against the Dynamic Effects of Piping Rupture

All safety-related SSCs are protected from the dynamic and environmental effects associated with postulated piping failures in high-energy piping systems inside and outside the containment where consideration of these dynamic effects is not eliminated by LBB. All safety-related SSCs are protected against environmental effects associated with postulated failures in moderate-energy piping systems. Each postulated piping failure shall be documented in a pipe break analysis report. Design of features that protect these SSCs considers, as applicable, pipe whip, jet impingement, flooding, compartment pressurization, and environmental conditions in the area where the piping is located. Table 2.3-2 lists high-energy and moderate-energy piping systems that are evaluated for the

dynamic and environmental effects of piping failures. Table 2.3-3 specifies the inspection, tests, analyses, and associated acceptance criteria for the pipe rupture hazard protection.

Evaluation of Leak-Before-Break (LBB)

The following piping systems are designed to meet leak-before-break (LBB) criteria:

a. Reactor coolant loop (RCL) piping, hot and cold legs,

b. Pressurizer surge line,

c. Shutdown cooling (SC) line from the reactor coolant system to the second isolation valve, and

d. Direct vessel injection (DVI) line from the reactor vessel to the safety injection tank and the second isolation valve.

The LBB evaluations consider normal and abnormal loads and load combinations to demonstrate compliance with the LBB design criteria.

LBB acceptance criteria are established and LBB evaluations including material properties are performed for each piping system designed to meet LBB criteria. For each piping system qualified for LBB, the as-built piping and materials are reconciled with the bases for the LBB acceptance criteria.

Analysis of Component Stress

Design and analysis of components are performed in accordance with the requirements of the ASME Section III on the basis of Code classification and ASME Service Level. For the component stress analysis, the requirements of the ASME Section III Subsection NB (Class 1), NC (Class 2), or ND (Class 3) code are applied. Design basis loads and load combination applicable to each system are considered in the stress analysis of components. ASME Section III Class 1 pressure boundary components are also subject to fatigue usage evaluations over the design life of the plant.

Piping system and components are designed as follows:

1. The ASME Section III Class 1 piping systems and components for systems identified in Table 2.3-1 are designed to retain their pressure integrity and functional capability under internal design and operating pressures and design basis loads.

2. The ASME Section III Class 1 piping systems and components for systems identified in Table 2.3-1 are evaluated for fatigue usage factor in both air and reactor coolant environments.

3. The ASME Section III Class 2 and 3 piping systems and components for systems identified in Table 2.3-1 are designed to retain their pressure integrity and functional capability under internal design and operating pressures and design-basis loads.

4. For each piping system qualified for LBB identified in Table 2.3-1, the as-built piping and materials are reconciled with the basis used for LBB acceptance criteria.

5. SSCs required for safe shutdown are protected from the dynamic and environmental effects of postulated high and moderate energy piping failures inside and outside the containment where consideration of these dynamic effects is not eliminated by LBB.

Table 2.3-1

Systems with ASME Section III Class 1, 2, and 3 Piping Systems and Components

Tier 1 Section	System Name	ASME Section III			LBB
		1	2	3	
2.4.1	Reactor Coolant System	V			V
2.4.2	In-containment Water Storage System	-	V	-	-
2.4.3 / 2.4.4	Safety Injection/Shutdown Cooling System	V	V	-	V
2.4.5	Reactor Coolant Gas Vent System	V	V	V	-
2.4.6	Chemical and Volume Control System	V	V	V	
2.6.2	Emergency Diesel Generator System	-	-	V	-
2.7.1.2	Main Steam System	-	V	V	-
2.7.1.4	Condensate and Feedwater System	-	V	-	-
2.7.1.5	Auxiliary Feedwater System	-	V	V	-
2.7.1.8	Steam Generator Blowdown System	-	V	-	-
2.7.2.1	Essential Service Water System	-	-	V	-
2.7.2.2	Component Cooling Water System	-	V	V	-
2.7.2.3	Essential Chilled Water System	-	-	V	-
2.7.2.5	Equipment and Floor Drainage System	-	V	V	-
2.7.2.6	Process and Post-Accident Sampling System	-	V	V	-
2.7.4.3	Spent Fuel pool Cooling and Cleanup System	-	V	V	-
2.7.6.2	Gaseous Waste Management System	-	V	-	-
2.11.2	Containment Spray System	-	V	-	-
2.11.3	Containment Isolation System	-	V	-	-

Table 2.3-2

High and Moderate Energy Piping Systems

System[(1)(2)]	High-Energy	Moderate-Energy
Reactor Coolant System	O	
Reactor Coolant Gas Vent System	O	
Safety Injection System	O	
Shutdown Cooling System	O	
Chemical and Volume Control System	O	
Steam Generator Blowdown System[(3)]	O	
Component Cooling Water System		O
Spent Fuel Pool Cooling and Cleanup System		O
Process and Effluent Radiation Monitoring and Sampling System		O
Process and Post-Accident Sampling System		O
Containment Spray System		O
Essential Service Water System		O
Main Steam System	O	
Condensate and Feedwater System	O	
Auxiliary Feedwater System[(5)]	O	
Auxiliary Steam System	O	
Emergency Diesel Generator System[(4)]	O	
Fire Protection System		O
Equipment and Floor Drainage System		O
Essential Chilled Water System		O
Plant Chilled Water System		O
Compressed Air System		O

(1) Systems classified as high-energy are either totally or partially high-energy. If portions of system are high-energy, it is classified as high-energy system.
(2) Systems or portions of systems outside the containment building and auxiliary building are excluded from this table.
(3) Wet layup recirculation system is classified as moderate-energy system.
(4) Subsystems other than an EDG engine starting air system are classified as moderate-energy systems.
(5) Subsystems other than an auxiliary feedwater pump turbine subsystem are classified as moderate-energy systems.

Table 2.3-3 (1 of 2)

Pipe Rupture Hazard Protection ITAAC

Design Commitment	Inspections, Tests, Analyses	Acceptance Criteria
1. All safety-related SSCs are protected against the dynamic and environmental effects associated with postulated failures in high-energy piping systems. Note: This design commitment and ITAAC do not address protection against dynamic effects for ASME Code Section III Class 1 and 2 piping and interconnected equipment nozzles that are qualified for LBB.	1. A pipe reputre analysis will be performed for all high-energy piping systems. An inspection will be performed of the as-built high-energy piping systems and protective features for the safety-related SSCs.	1. A pipe rupture analysis report exists and concludes that the safety-related SSCs are protected against the dynamic and environmental effects associated with postulated failures in high-energy piping systems as follows: • Protective features are installed in accordance with the as-built pipe rupture analysis report. • The as-built safety-related SSCs are protected against or qualified to withstand the dynamic effects of postulated pipe failures in the as-built high-energy piping systems. • The as-built safety-related SSCs are protected against or qualified to withstand the environmental effects of postulated pipe failures in the as-built high-energy piping systems.

Table 2.3-3 (2 of 2)

Design Commitment	Inspections, Tests, Analyses	Acceptance Criteria
2. All safety-related SSCs are protected against environmental effects associated with postulated failures in moderate-energy piping systems.	2. A pipe rupture analysis will be performed for all moderate-energy piping systems. An inspection will be performed of the as-built moderate-energy piping systems and protective features for the safety-related SSCs.	2. A pipe rupture analysis report exists and concludes that the safety-related SSCs are protected against the environmental effects associated with postulated failures in moderate-energy piping systems as follows: • Protective features are installed in accordance with the as-built pipe rupture analysis report. • The as-built safety-related SSCs are protected against or qualified to withstand the environmental effects associated with postulated failures in the as-built moderate-energy piping systems.

2.4 Reactor Systems

2.4.1 Reactor Coolant System

2.4.1.1 Design Description

The reactor coolant system (RCS) is a safety-related system which removes the heat generated in the reactor core and transfers the heat to the steam generators. The RCS forms part of the pressure and fission product boundary between the reactor coolant and the reactor containment building (RCB) atmosphere.

The RCS is located in the RCB and consists of a reactor vessel (RV), two vertical U-tube steam generators (SGs), four reactor coolant pumps (RCPs), one pressurizer (PZR), four pressurizer pilot operated safety relief valves (POSRVs), ninety three control element drive mechanisms (CEDMs), piping, heaters, controls, instrumentation, and valves.

The safety-related functions of the RCS are as follows:

a. To form a barrier against the uncontrolled release of reactor coolant and radioactive materials to the containment.

b. In conjunction with other systems, to provide cooling during all plant evolutions and anticipated operational occurrences to preclude significant reactor core damages.

c. To provide protection of the RCS from overpressure by pressure relief devices for all design basis events (DBEs).

The RCS is designed and/or constructed as follows:

1. The functional arrangement of the RCS is as described in the Design Description of Subsection 2.4.1.1 and Table 2.4.1-1 and as shown in Figures 2.4.1-1 and 2.4.1-2.

2.a The ASME Code components identified in Table 2.4.1-2 are designed and constructed in accordance with ASME Section III requirements.

2.b The ASME Code piping including supports identified in Table 2.4.1-1 is designed and constructed in accordance with ASME Section III requirements.

3.a Pressure boundary welds in ASME Code components identified in Table 2.4.1-2 meet ASME Section III requirements.

3.b Pressure boundary welds in ASME Code piping identified in Table 2.4.1-1 meet ASME Section III requirements.

4.a The ASME Code components identified in Table 2.4.1-2 retain their pressure boundary integrity under at their design pressure.

4.b The ASME Code piping identified in Table 2.4.1-1 retains its pressure boundary integrity under at its design pressure.

5.a The seismic Category I components and instruments identified in Tables 2.4.1-2 and 2.4.1-3, including the supports and anchorages, withstands seismic design basis loads without loss of safety function.

5.b The seismic Category I piping, including supports, identified in Table 2.4.1-1 withstands seismic design basis loads without loss of safety function.

6.a The Class 1E components and instruments identified in Tables 2.4.1-2 and 2.4.1-3 as being qualified for a harsh environment (and the associated wiring, cables, and terminations) withstand the environmental conditions that would exist before, during, and following a design basis accident without loss of safety function for the time required to perform the safety function.

6.b Each of the Class 1E components and instruments identified in Tables 2.4.1-2 and 2.4.1-3 is powered from its respective Class 1E division.

6.c Physical separation and electrical isolation are provided (1) between Class 1E divisions, and (2) between Class 1E divisions and non-Class 1E divisions.

7.a The RCS safety-related valves are designed and qualified to perform their safety-related function under the full range of fluid flow, differential pressure, electrical, and temperature conditions with debris laden coolant fluids up to and including design basis accident conditions.

7.b After loss of motive power, MOVs and AOVs identified in Table 2.4.1-2 assume the indicated loss of motive power position.

8.a Controls exist in the MCR to start and stop the reactor coolant pumps and to open and close the MOVs and AOVs listed in Table 2.4.1-2.

8.b Controls exist in the RSR to start and stop the reactor coolant pumps and to open and close the MOVs and AOVs listed in Table 2.4.1-2.

8.c Displays and alarms exist and are retrievable in the MCR as defined in Tables 2.4.1-2 and 2.4.1-3.

8.d Displays and alarms exist and are retrievable in the RSR as defined in Tables 2.4.1-2 and 2.4.1-3.

8.e Controls exist in the MCR to energize and de-energize the pressurizer backup heaters listed in Table 2.4.1-2.

8.f Controls exist in the RSR to energize and de-energize the pressurizer backup heaters listed in Table 2.4.1-2.

9.a The pressurizer POSRVs provide overpressure protection for reactor coolant pressure boundary components in the RCS.

9.b Each RCP motor has a flywheel which retains its integrity at a design overspeed condition.

9.c Each RCP has rotating inertia to slow the pump flow coastdown when electrical power is disconnected.

9.d The RCPs circulate coolant at a rate which removes heat generated in the reactor core.

9.e The RCS provides properly rated pressurizer backup heaters to control system pressure.

10. The RV is equipped with holders for at least six capsules for accommodating material surveillance specimens.

11. RV material specimens taken from materials actually used in fabrication of the beltline region are inserted in the capsules and include Charpy V-notch

specimens of base metal, weld metal and heat-affected zone material, and tensile and 1/2T compact tension specimens from base metal and weld metal.

12. The piping systems identified in Table 2.4.1-1 as qualified for LBB meet the LBB acceptance criteria, or protection of safety-related SSCs from the dynamic effects associated with postulated failures of the high energy piping system is provided.

13. The nozzle dam withstands its design pressure of 50 psig under the design conditions.14. The decay heat removal function of the SCS will not be impaired by air entrainment into the SCS suction nozzle.

2.4.1.2 Inspections, Tests, Analyses, and Acceptance Criteria

Table 2.4.1-4 specifies the inspections, tests, analyses, and associated acceptance criteria for the reactor coolant system.

Table 2.4.1-1

Reactor Coolant System Equipment and Piping Location/Characteristics

Equipment and Piping Name	Location	ASME Section III Class	Seismic Category	LBB
Reactor vessel	Containment	1	I	No
Pressurizer	Containment	1	I	No
Steam generators (primary/secondary)	Containment	1/2	I	No
Pilot operated safety relief valves (POSRVs)	Containment	1	I	No
POSRV discharging piping upstream of 3-way valves	Containment	- (1)	II	No
POSRV discharging piping downstream of 3-way valves	Containment	3	I	No
3-way valves of POSRV discharge piping	Containment	3	I	No
Reactor coolant piping drain piping upstream of and including the second drain stop valve	Containment	1	I	No
Reactor coolant piping	Containment	1	I	Yes
Pressurizer surge line piping	Containment	1	I	Yes
Pressurizer spray line piping	Containment	1	I	No
Control element drive mechanisms	Containment	1	I	No

(1) Dash (-) indicates not applicable.

Table 2.4.1-2 (1 of 2)

Reactor Coolant System Components List

Component Name	Item No.	ASME Section III Class	Seismic Category	Class 1E/ Harsh Envir. Qual.	Control/ Display at MCR	Control/ Display at RSR	Control Signal	Active Safety Function	Loss of Motive Power Position
Reactor Vessel	RV	1	I	-/-	-/-(1)	-/-	-	-	-
Steam Generator (primary/secondary)	SG # 1&2	1/2	I	-/-	-/-	-/-	-	-	-
Pressurizer	PZR	1	I	-/-	-/-	-/-	-	-	-
Reactor Coolant Pumps	RCP 1A, 1B, 2A, 2B	1	I	No/Yes	Yes/Yes	Yes/Yes	-(1)	-	-
PZR Backup Heaters	Bank No.1, No.2	1	I	Yes/Yes	Yes/Yes	Yes/Yes	PPCS, PLCS	-	-
Pilot Operated Safety Relief Valves (POSRVs) Main Valves	RC-200, 201, 202, 203	1	I	-/Yes	Yes/Yes	-/-	-	Open /Closed	
POSRV Motor Operated Isolation Valves (MOV)	RC-120, 121, 122, 123, 124, 125, 126, 127	1	I	Yes/Yes	Yes/Yes	-/-	-	Closed	As Is
POSRV Motor Operated Pilot Valves (MOV)	RC-130, 131, 132, 133, 134, 135, 136, 137	1	I	Yes(2)/Yes	Yes/Yes	-/-	-	Closed	As Is
POSRV Spring-Loaded Pilot Valves	RC-300, 301, 302, 303, 304, 305, 306, 307	1	I	-/Yes	Yes/Yes	-/-	-	Open /Closed	

Table 2.4.1-2 (2 of 2)

Component Name	Item No.	ASME Section III Class	Seismic Category	Class 1E/ Harsh Envir. Qual.	Control/ Display at MCR	Control/ Display at RSR	Control Signal	Active Safety Function	Loss of Motive Power Position
POSRV Discharge Valves	RC-385, 386	3	I	Yes/Yes	Yes/Yes	Yes/Yes	-	Open to IRWST	As Is
POSRV Discharge Vacuum Relief Valves	RC-1401, 1402, 1403, 1404	3	I	-/Yes	-/-	-/-	-	Open /Closed	-
PZR Spray Control Valve (AOV)	RC-100E, 100F	1	I	No/No	Yes/Yes	-/-	PPCS	-	Closed
PZR Spray Bypass Valve (Manual)	RC-236, 237	1	I	-/No	-/-	-/-	-	-	-
PZR Spray Isolation Valve (MOV)	RC-442, 443	1	I	No/No	Yes/ Yes	-/-	-	-	As Is
PZR Spray Check Valve	RC-244	1	I	-/No	-/-	-/-	-	-	-
Controlled Bleedoff Isolation Valve (MOV)	RC-430, 431, 432, 433	2	I	No/No	Yes/Yes	-/-	-	-	As Is
Control Element Drive Mechanism	CEDM # 1 ~ 93	1	I	Yes (3)/-	Yes/Yes	-	PPS, RPS, DPS, RPCS	-	-
3-way Valves of POSRV Discharge Piping (MOV)	RC-385,386	3	I	Yes/Yes	Yes/Yes	Yes/Yes	-	-	As Is
Vacuum Relief Valve	RC-1401, 1402, 1403, 1404	3	I	No/No					

(1) Dash(-) indicates not applicable.
(2) For motor operated pilot valves.
(3) For Reed Switch Position Transmitter (RSPT)

Table 2.4.1-3

Reactor Coolant System Instruments List

Instrument Name	Item No.	ASME Section III Class	Seismic Category	Class 1E/ Harsh Envir. Qual.	Display/ Alarm at MCR	Display/ Alarm at RSR
PZR Pressure (NR)	P-101A, B, C, D	-(1)	I	Yes/Yes	Yes/Yes	-/-
PZR Pressure (WR)	P-102A, B, C, D	-	I	Yes/Yes	Yes/Yes	Yes (3)/Yes
PZR Pressure (Restricted Range)	P-103A, 104B, 105C, 106D	-	I	Yes/Yes	Yes/Yes	-/-
RCP Discharge Pressure	P-190A, B	-	I	Yes/Yes	Yes/No	-/-
S/G Differential Pressure	P-115A, B, C, D, P-125A, B, C, D	-	I	Yes/Yes	Yes/Yes	-/-
Hot Leg Temperature (NR)	T-112A, B, C, D, T-113A, B, C, D	-	I	Yes/Yes	Yes/Yes	-/-
Hot Leg Temperature (WR)	T-132A, B, T-133A, B	-	I	Yes/Yes	Yes/No	Yes/No
Cold Leg Temperature (NR)	T-122A, B, C, D, T-123A, B, C, D	-	I	Yes/Yes	Yes/Yes	-/-
Cold Leg Temperature (WR)	T-142A, B, T-143A, B	-	I	Yes/Yes	Yes/No	Yes/No
PZR Level	L-110A, B, L-103C (2)	-	I	Yes/Yes	Yes/Yes	Yes/No
RCP Speed	S-113A, B, C, D S-123A, B, C, D S-133A, B, C, D S-143A, B, C, D	-	I	Yes/Yes	Yes/Yes	-/-
Refueling Water Level (NR)	L-105, 106	-	II	No/No	Yes/Yes	-/-
Refueling Water Level (WR)	L-115, 116	-	II	No/No	Yes/No	-/-
SG Pressure	P-1013A, B, C, D, P-1023A, B, C, D	-	I	Yes/Yes	Yes/Yes	Yes/Yes
SG Level (NR)	L-1114A, B, C, D, L-1124A, B, C, D	-	I	Yes/Yes	Yes/Yes	-/-
SG Level (WR)	L-1113A, B, C, D, L-1123A, B, C, D	-	I	Yes/Yes	Yes/Yes	Yes/Yes

(1) Dash(-) indicates not applicable.
(2) No alarm.
(3) Trend is displayed instead of indication.

Table 2.4.1-4 (1 of 9)

Reactor Coolant System ITAAC

Design Commitment	Inspections, Tests, Analyses	Acceptance Criteria
1. The functional arrangement of the RCS is as described in the Design Description of Subsection 2.4.1.1 and in Table 2.4.1-1 and as shown in Figures 2.4.1-1 and 2.4.1-2.	1. Inspection of the as-built RCS is conducted.	1. The as-built RCS conforms with the functional arrangement as described in the Design Description of Subsection 2.4.1.1 and in Table 2.4.1-1 and as shown in Figures 2.4.1-1 and 2.4.1-2.
2.a The ASME Code components identified in Table 2.4.1-2 are designed and constructed in accordance with ASME Section III requirements.	2.a Inspection of the as-built ASME Code components identified in Table 2.4.1-2 is performed and documented in the ASME data report(s).	2.a The ASME Section III data report(s) exist and conclude that the as-built ASME Code components identified in Table 2.4.1-2 are designed and constructed in accordance with ASME Section III requirements.
2.b The ASME Code piping, including supports, identified in Table 2.4.1-1 is designed and constructed in accordance with ASME Section III requirements.	2.b Inspection of the as-built ASME Code piping, including supports, identified in Table 2.4.1-1 is performed and documented in the ASME data report(s).	2.b The ASME Section III data report(s) exist and conclude that the as-built ASME Code piping, including supports, identified in Table 2.4.1-1 is designed and constructed in accordance with ASME Section III requirements.
3.a Pressure boundary welds in ASME Code components identified in Table 2.4.1-2 meet ASME Section III requirements.	3.a Inspections of the as-built pressure boundary welds in ASME Code components identified in Table 2.4.1-2 are performed in accordance with the ASME Section III.	3.a A report exists and concludes that the ASME Section III requirements are met for non-destructive examination of the as-built pressure boundary welds in ASME Code components identified in Table 2.4.1-2.
3.b Pressure boundary welds in ASME Code piping identified in Table 2.4.1-1 meet ASME Section III requirements.	3.b Inspections of the as-built pressure boundary welds in ASME Code piping identified in Table 2.4.1-1 are performed in accordance with the ASME Section III.	3.b A report exists and concludes that the ASME Section III requirements are met for non-destructive examination of the as-built pressure boundary welds in ASME Code piping identified in Table 2.4.1-1.

Table 2.4.1-4 (2 of 9)

Design Commitment	Inspections, Tests, Analyses	Acceptance Criteria
4.a The ASME Code components identified in Table 2.4.1-2 retain their pressure boundary integrity at their design pressure.	4.a A hydrostatic test is conducted on the as-built ASME Code components identified in Table 2.4.1-2 required to be hydrostatically tested by the ASME Section III.	4.a A report exists and concludes that the results of the hydrostatic test of the as-built ASME Code components identified in Table 2.4.1-2 conform with the ASME Section III requirements.
4.b The ASME Code piping identified in Table 2.4.1-1 retains its pressure boundary integrity at its design pressure.	4.b A hydrostatic test is conducted on the as-built ASME Code piping identified in Table 2.4.1-1 required to be hydrostatically tested by the ASME Section III.	4.b A report exists and concludes that the results of the hydrostatic test of the as-built ASME Code piping identified in Table 2.4.1-1 conform with ASME Section III requirements.
5.a The seismic Category I components and instruments identified in Tables 2.4.1-2 and 2.4.1-3, including the supports and anchorages, withstand seismic design basis loads without loss of safety function.	5.a.i Inspections are performed to verify that the as-built seismic Category I components and instruments are located in the seismic Category I structure.	5.a.i The as-built seismic Category I components and instruments identified in Tables 2.4.1-2 and 2.4.1-3 are located in the seismic Category I structure.
	5.a.ii Type tests, analyses or a combination of type tests and analyses of seismic Category I components and instruments are performed.	5.a.ii A report exists and concludes that the seismic Category I components and instruments identified in Table 2.4.1-2 and 2.4.1-3 withstand seismic design basis loads without loss of safety function.
	5.a.iii Inspections are performed to verify that the as-built seismic Category I components and instruments, including the supports and anchorages, are seismically bounded by the tested or analyzed conditions.	5.a.iii A report exists and concludes that the as-built seismic Category I components and instruments identified in Table 2.4.1-2 and 2.4.1-3, including the supports and anchorages, are seismically bounded by the tested or analyzed conditions.

Table 2.4.1-4 (3 of 9)

Design Commitment	Inspections, Tests, Analyses	Acceptance Criteria
5.b The seismic Category I piping, including supports, identified in Table 2.4.1-1 withstands seismic design basis loads without loss of safety function.	5.b.i Inspections are performed to verify that the as-built seismic Category I piping, including supports, is located in the seismic Category I structure.	5.b.i The as-built seismic Category I piping, including supports, identified in Table 2.4.1-1 is located in the seismic Category I structure.
	5.b.ii Inspections and analyses of the as-built seismic Category I piping, including supports, are performed.	5.b.ii A report exists and concludes that the as-built seismic Category I piping, including supports, identified in Table 2.4.1-1 withstands seismic design basis loads without loss of safety function.
6.a The Class 1E components and instruments identified in Tables 2.4.1-2 and 2.4.1-3 as being qualified for a harsh environment (and the associated wiring, cables, and terminations) withstand the environmental conditions that would exist before, during, and following a design basis accident without loss of safety function for the time required to perform the safety function.	6.a.i Type tests or a combination of type tests and analyses are performed on Class 1E components and instruments located in a harsh environment.	6.a.i A report exists and concludes that the Class 1E components and instruments identified in Tables 2.4.1-2 and 2.4.1-3 as being qualified for a harsh environment withstand the environmental conditions that would exist before, during, and following a design basis accident without loss of safety function for the time required to perform the safety function.
	6.a.ii Inspections are performed on the as-built Class 1E components and instruments (and the associated wiring, cables, and terminations) located in a harsh environment.	6.a.ii A report exists and concludes that the as-built Class 1E components and instruments identified in Tables 2.4.1-2 and 2.4.1-3 as being qualified for a harsh environment (and the associated wiring, cables, and terminations) are bounded by type tests or a combination of type tests and analyses.

Table 2.4.1-4 (4 of 9)

Design Commitment	Inspections, Tests, Analyses	Acceptance Criteria
6.b Each of the Class 1E components and instruments identified in Tables 2.4.1-2 and 2.4.1-3 is powered from its respective Class 1E division.	6.b Tests are performed by providing a test signal in only one Class 1E division at a time.	6.b The test signal exists at the Class 1E components and instruments identified in Tables 2.4.1-2 and 2.4.1-3 as being powered from the Class 1E division under test.
6.c Physical separation and electrical isolation are provided (1) between Class 1E divisions and (2) between Class 1E divisions and non-Class 1E divisions.	6.c Inspection of the as-built Class 1E divisions is performed.	6.c Physical separation and electrical isolation exist in accordance with NRC RG 1.75 (1) between Class 1E divisions and (2) between Class 1E divisions and non-Class 1E divisions.
7.a The RCS safety-related valves are functionally designed and qualified to perform their safety-related function under the full range of fluid flow, differential pressure, electrical, and temperature conditions with debris laden coolant fluids up to and including design basis accident conditions.	7.a.i Tests or a combination of type tests and analyses will be performed to demonstrate the capabilities of the RCS safety-related valves.	7.a.i A Functional Qualification Report performed in conformance to ASME QME-1-2007, as accepted in Regulatory Guide 1.100 Revision 3, exists and concludes that the RCS safety-related valves listed in Table 2.4.1-2 are functionally designed and qualified to perform their safety-related function under the full range of fluid flow, differential pressure, electrical, and temperature conditions with debris laden coolant fluids up to and including design basis accident conditions.

Table 2.4.1-4 (5 of 9)

Design Commitment	Inspections, Tests, Analyses	Acceptance Criteria
7.a (cont.)	7.a.ii A diagnostic stroke test and analysis will be performed of the RCS safety-related valves under preoperational temperature, differential pressure, and flow conditions.	7.a.ii Each RCS safety-related valve listed in Table 2.4.1-2 strokes fully open and fully closed by remote operation (or manual operation if a manually operated valve) under preoperational temperature, differential pressure, and flow conditions. Analysis, based on sufficient diagnostic data, demonstrates that the valves will perform at their design-basis capability as established by the type test performed in accordance with 7.a.i.
7.b After loss of motive power, MOVs and AOVs identified in Table 2.4.1-2 assume the indicated loss of motive power position.	7.b Tests of the as-built MOVs and AOVs are performed under the conditions of loss of motive power.	7.b Upon loss of motive power, each as-built MOV or AOV identified in Table 2.4.1-2 assumes the indicated loss of motive power position.
8.a Controls exist in the MCR to start and stop the reactor coolant pumps and to open and close the MOVs and AOVs listed in Table 2.4.1-2.	8.a Tests are performed using the controls in the MCR to start and stop the reactor coolant pumps and to open and close the MOVs and AOVs.	8.a Controls in the as-built MCR start and stop the reactor coolant pumps and open and close the MOVs and AOVs identified in Table 2.4.1-2.
8.b Controls exist in the RSR to start and stop the reactor coolant pumps and to open and close the MOVs and AOVs listed in Table 2.4.1-2.	8.b Tests are performed using the controls in the RSR to start and stop the reactor coolant pumps and to open and close the MOVs and AOVs.	8.b Controls in the as-built RSR start and stop the reactor coolant pumps and open and close the MOVs and AOVs identified in Table 2.4.1-2.

Table 2.4.1-4 (6 of 9)

Design Commitment		Inspections, Tests, Analyses		Acceptance Criteria	
8.c	Displays and alarms exist and are retrievable in the MCR as defined in Tables 2.4.1-2 and 2.4.1-3.	8.c	Inspections of the as-built displays and alarms in the MCR will be performed.	8.c	Displays and alarms exist and are retrieved in the as-built MCR as defined in Tables 2.4.1-2 and 2.4.1-3.
8.d	Displays and alarms exist and are retrievable in the RSR as defined in Tables 2.4.1-2 and 2.4.1-3.	8.d	Inspections of the as-built displays and alarms in the RSR will be performed.	8.d	Displays and alarms exist and are retrieved in the as-built RSR as defined in Tables 2.4.1-2 and 2.4.1-3.
8.e	Controls exist in the MCR to energize and de-energize the pressurizer backup heaters listed in Table 2.4.1-2.	8.e	Tests are performed using the controls in the MCR.	8.e	Controls in the MCR energize and de-energize the pressurizer backup heaters listed in Table 2.4.1-2.
8.f	Controls exist in the RSR to energize and de-energize the pressurizer backup heaters listed in Table 2.4.1-2.	8.f	Tests are performed using the controls in the RSR.	8.f	Controls in the RSR energize and de-energize the pressurizer backup heaters listed in Table 2.4.1-2.
9.a	The pressurizer POSRVs provide overpressure protection for reactor coolant pressure boundary components in the RCS.	9.a.i	Testing in accordance with ASME Section III are performed to confirm the set pressure of the pressurizer POSRVs.	9.a.i	The pressurizer POSRV set pressure equals 173.7 ± 1.3 kg/cm^2A (2,470 ± 18 psia).
		9.a.ii	Testing and analysis of the pressurizer POSRVs are performed to confirm the requirement of minimum flow capacity in accordance with ASME Section III.	9.a.ii	A report exists and concludes that the minimum flow capacity of the pressurizer POSRVs is 244,900 kg/hr (540,000 lb/hr) at the set pressure of 173.7 kg/cm^2A (2,470 psia)

Table 2.4.1-4 (7 of 9)

Design Commitment	Inspections, Tests, Analyses	Acceptance Criteria
9.a (cont.)	9.a.iii Tests of the POSRVs for main valve operation are performed.	9.a.iii The POSRVs open at a pressure that satisfies the ASME Section III valve operation requirements.
	9.a.iv Test for actuation time of the POSRVs is performed.	9.a.iv Maximum opening time (including dead time) of the POSRVs is 0.5/5 seconds (hydraulic/manual). Maximum closing time (including dead time) of the POSRVs is 0.9/9 seconds (hydraulic/manual).
9.b Each RCP motor has a flywheel which retains its integrity at a design overspeed condition.	9.b Shop testing of each RCP flywheel is performed at the vendor facility at overspeed condition.	9.b Each RCP flywheel maintains its integrity during an overspeed test of no less than 125 % of the motor synchronous speed.
9.c Each RCP has rotating inertia to slow the pump flow coastdown when electrical power is disconnected.	9.c Analysis of RCP rotating inertia is performed.	9.c The rotating inertia of each RCP and motor assembly is no less than 6,717 kg-m^2 (159,400 lb-ft^2)
9.d The RCPs circulate coolant at a rate which removes heat generated in the reactor core.	9.d Testing to measure RCS flow with four RCPs operating at normal zero power pressure and temperature conditions is performed.	9.d Pre-core total measured RCS flow rate is between 1,953,000 L/min (516,000 gpm) and 2,058,000 L/min (544,000 gpm)
9.e The RCS provides pressurizer backup heaters to control system pressure.	9.e Inspections are performed to verify the rated capacity of the as-built pressurizer backup heater groups No.1 and No.2.	9.e Each as-built pressurizer backup heater group (No.1 and No.2) has a rated capacity of at least 200 kW.
10. The RV is equipped with holders for at least six capsules for accommodating material surveillance specimens.	10. Inspection of the RV for presence of capsules is performed.	10. At least six capsules are in the reactor vessel.

Table 2.4.1-4 (8 of 9)

Design Commitment	Inspections, Tests, Analyses	Acceptance Criteria
11. RV material specimens taken from materials actually used in fabrication of the beltline region are inserted in the capsules, and include Charpy V-notch specimens of base metal, weld metal, and heat-affected zone material, and tensile and 1/2T compact tension specimens from base metal and weld metal.	11. Inspection of RV material specimens is performed.	11. RV material specimens are made from material used in RV fabrication, and include Charpy V-notch specimens of base metal, weld metal, and heat-affected zone material, and tensile and 1/2T compact tension specimens from base metal and weld metal.
12. The piping systems identified in Table 2.4.1-1 as qualified for LBB meet the LBB acceptance criteria, or protection of safety-related SSCs from the dynamic effects associated with postulated failures of the high energy piping system is provided.	12. For the piping systems identified in Table 2.4.1-1 as being qualified for LBB, inspections and analyses will be performed for conformance with the LBB acceptance criteria, or inspections and analyses of the as-built high-energy piping and protective features for safety-related SSCs will be performed.	12. For the piping systems identified in Table 2.4.1-1 as qualified for LBB, either an LBB evaluation report exists and concludes that the LBB acceptance criteria are met by the as-built piping system including the final detailed design parameters, or a pipe rupture analysis report exists and concludes that the as-built safety-related SSCs are protected against or are qualified to withstand the effects of postulated failures of the as-built high-energy piping system.
13. The nozzle dam withstands its design pressure of 50 psig under the design conditions.	13. Vendor test or type test will be performed that demonstrates the capability of the nozzle dam to operate under the design conditions.	13. A test report exists and concludes that the nozzle dam withstands a design pressure of 50 psig under the design conditions.

Table 2.4.1-4 (9 of 9)

Design Commitment	Inspections, Tests, Analyses	Acceptance Criteria
14. The decay heat removal function of the SCS will not be impaired by gas entrainment during mid-loop operation while the system is operating at its maximum allowable flow rate and the reactor coolant hot leg level is at the lowest level allowable for decay heat removal.	14. Analyses or tests of the potential for gas entrainment during mid-loop operation will be performed on the as-built configuration of the SCS.	14. A report exists and concludes that the decay heat removal function of the SCS will not be impaired by gas entrainment during mid-loop operation while the system is operating at its maximum allowable flow rate and the reactor coolant hot leg level is at the lowest level allowable for decay heat removal.

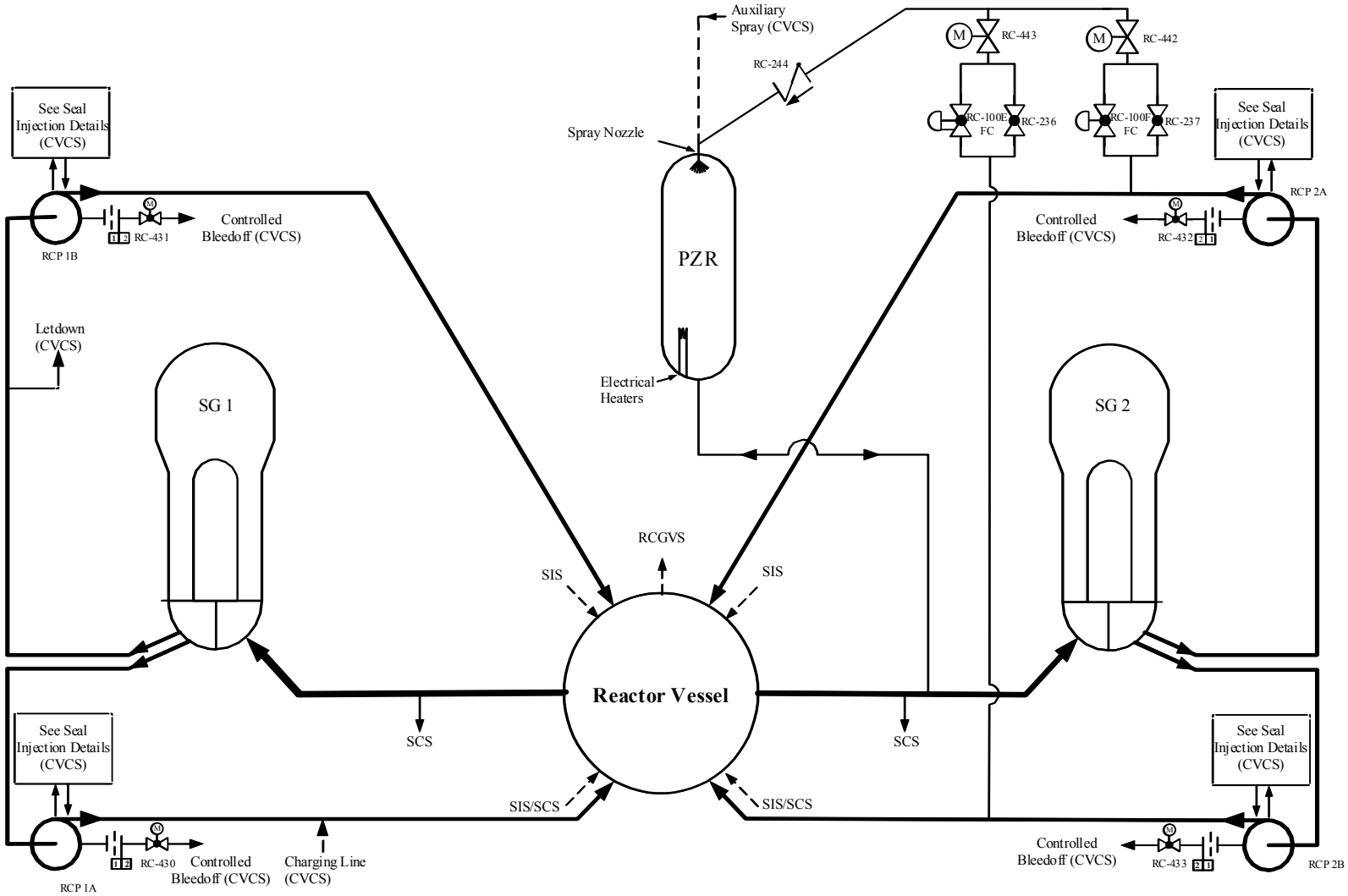

Figure 2.4.1-1 Reactor Coolant System

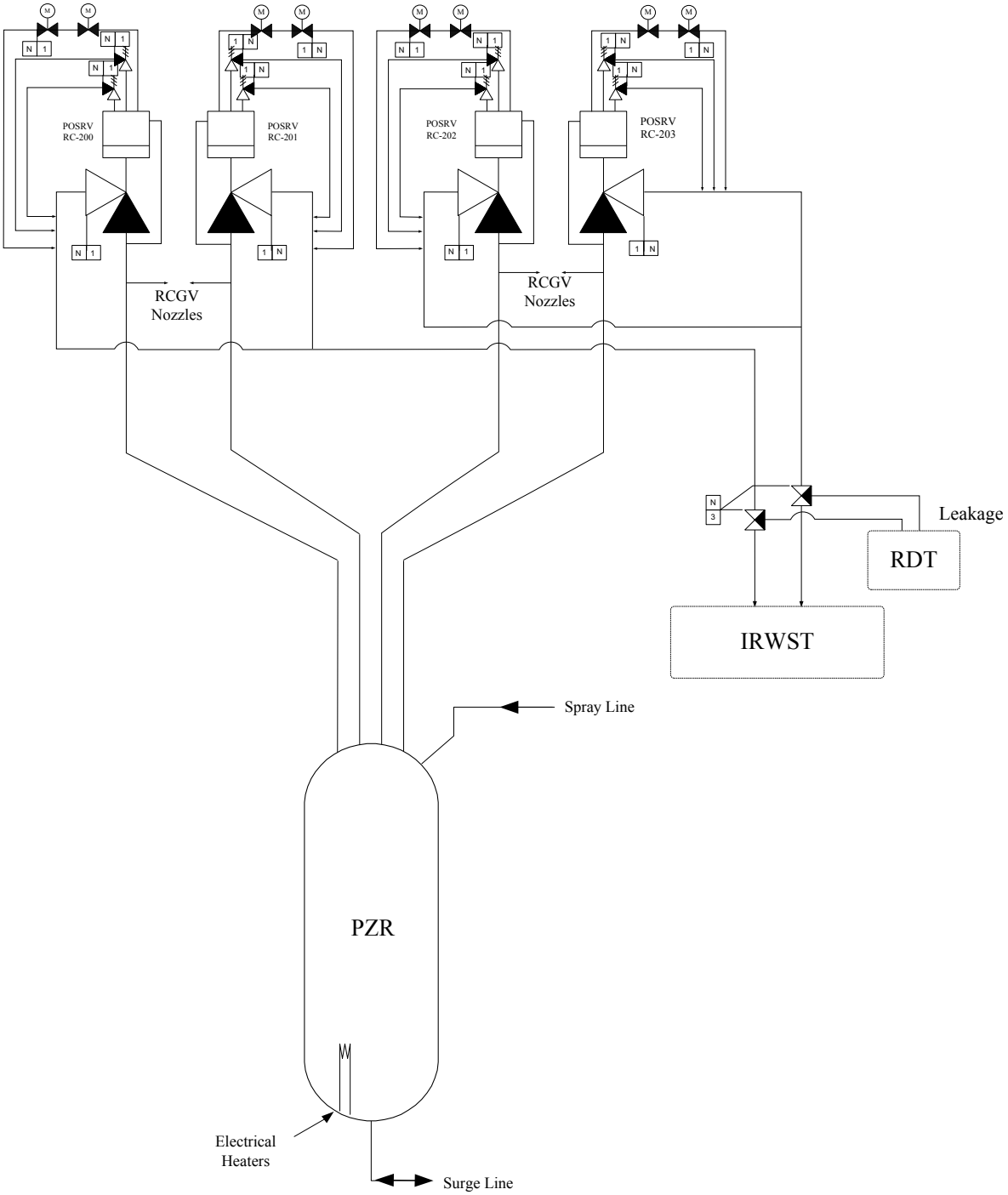

Figure 2.4.1-2 Reactor Coolant System (Pressurizer)

2.4.2 In-containment Water Storage System

2.4.2.1 Design Description

The in-containment water storage system (IWSS) is a safety-related system and includes the in-containment refueling water storage tank (IRWST) which is an integral part of containment building structures, the holdup volume tank (HVT) which is also an integral part of the containment building structures, and the cavity flooding system (CFS).

The IRWST provides borated water for the safety injection system (SIS) and the containment spray system (CSS). It is the primary heat sink for discharges from the POSRVs and the reactor coolant gas vent system (RCGVS). It is the source of water for the CFS, and for filling the refueling pool via the shutdown cooling system (SCS).

The HVT collects water released in containment during design basis events (DBEs) and returns water to the IRWST through spillways. It receives water discharged from the IRWST and transfers the water to the reactor cavity area by the CFS.

The CFS is used to provide water to flood the reactor cavity in response to beyond DBEs.

The IWSS is located in the containment.

1. The functional arrangement of the IWSS is as described in the Design Description of Subsection 2.4.2.1 and in Table 2.4.2-1 and as shown in Figure 2.4.2-1.

2.a The ASME Code components identified in Table 2.4.2-2 are designed and constructed in accordance with ASME Section III requirements.

2.b The ASME Code piping, including supports, identified in Table 2.4.2-1 is designed and constructed in accordance with ASME Section III requirements.

3.a Pressure boundary welds in ASME Code components identified in Table 2.4.2-2 meet ASME Section III requirements.

3.b Pressure boundary welds in ASME Code piping identified in Table 2.4.2-1 meet ASME Section III requirements.

4.a The ASME Code components identified in Table 2.4.2-2 retain their pressure boundary integrity at their design pressure.

4.b The ASME Code piping identified in Table 2.4.2-1 retains its pressure boundary integrity at its design pressure.

5.a The seismic Category I components and instruments identified in Tables 2.4.2-2 and 2.4.2-3, including the supports and anchorages, withstand seismic design basis loads without loss of safety function.

5.b The seismic Category I piping, including supports, identified in Table 2.4.2-1 withstands seismic design basis loads without loss of safety function.

6.a The Class 1E components and instruments identified in Tables 2.4.2-2 and 2.4.2-3 as being qualified for a harsh environment (and the associated wiring, cables, and terminations) withstand the environmental conditions that would exist before, during, and following a design basis accident without loss of safety function for the time required to perform the safety function.

6.b Each of the Class 1E components and instruments identified in Tables 2.4.2-2 and 2.4.2-3 is powered from its respective Class 1E division.

6.c Physical separation and electrical isolation are provided (1) between Class 1E divisions, and (2) between Class 1E divisions and non-Class 1E divisions.

7.a The IWSS safety-related valves are designed and qualified to perform their safety-related function under the full range of fluid flow, differential pressure, electrical, and temperature conditions up to and including design basis accident conditions.

7.b After loss of motive power, MOVs and SOVs identified in Table 2.4.2-2 assume the indicated loss of motive power position.

8.a Controls exist in the MCR to open and close the MOVs and SOVs identified in Table 2.4.2-2.

8.b Controls exist in the RSR to open and close the MOVs and SOVs identified in Table 2.4.2-2.

8.c Displays and alarms exist and are retrievable in the MCR as defined in Tables 2.4.2-2 and 2.4.2-3.

8.d Displays and alarms exist and are retrievable in the RSR as defined in Tables 2.4.2-2 and 2.4.2-3.

9.a The IWSS provides borated water for safety injection and containment spray during design basis events.

9.b The IWSS provides post-LOCA pH control with tri-sodium phosphate (TSP).

9.c The IWSS provides protection from overpressure and vacuum of the IRWST.

10. The IWSS non-metallic parts, materials, and lubricants used in safety-related mechanical equipment perform their safety-related function up to the end of their qualified life in the design basis harsh environmental conditions (both internal service conditions and external environmental conditions) experienced during normal operations, anticipated operational occurrences, design-basis accidents, and post accident conditions.

2.4.2.2 Inspections, Tests, Analyses, and Acceptance Criteria

The inspections, tests, analyses, and associated acceptance criteria of the IWSS are specified in Table 2.4.2-4.

The ITAAC related to the CIVs and the piping between the CIVs of the IWSS are described in Table 2.11.3-2.

Table 2.4.2-1

In-containment Water Storage System Equipment and Piping Location/Characteristics

Equipment and Piping Name	Location	ASME Section III Class	Seismic Category
In-containment refueling water storage tank	Containment	-	I
Holdup Volume Tank	Containment	-	I
Tri-Sodium Phosphate Baskets	Containment	-	I
IRWST Sump Strainers	Containment	-	I
Swing Panels	Containment	-	I
In-containment refueling water storage tank spillway	Containment	2	I
Holdup volume tank spillway including the power operated valves IW-V001, 002	Containment	2	I
Reactor cavity spillway including the power operated valves IW-V003, V004	Containment	2	I
IRWST level instrument penetration piping upstream of and including the isolation valves IW-V010, 011, 022, 023, 024, 025, 026, 027	Auxiliary Bldg.	2	I
HVT level instrument penetration piping upstream of and including the isolation valves IW-V012, 013, 014, 015, 016, 017, 028, 029, 030, 031	Auxiliary Bldg.	2	I
Reactor cavity level instrument penetration piping upstream of and including the isolation valves, IW-V018, 019, 020, 021, 032, 033, 034, 035	Auxiliary Bldg.	2	I
Containment penetration piping of CVCS BAMP suction line upstream of and including the isolation valves, IW-V005, 006	Auxiliary Bldg.	2	I

Table 2.4.2-2 (1 of 2)

In-containment Water Storage System Component List

Component Name	Item No.	ASME Section III Class	Seismic Category	Class 1E/ Harsh Envir. Qual.	Control/ Display at MCR	Control/ Display at RSR	Control Signal	Active Safety Function	Loss of Motive Power Position
In-Containment Water Storage Tank (IRWST)	IW-TK01	-	I	-	-	-	-	-	-
Holdup Volume Tank (HVT)	IW-TK02	-	I	-	-	-	-	-	-
IRWST Sump Strainers	IW-ST01A/B/C/D	-	I	-	-	-	-	-	-
Swing Panel	IW-SP01A/B/C/D, SP02A/B/C/D, SP03A/B/C/D	-	I	-	-/Yes	-/Yes	-	Open	-
Tri-Sodium Phosphate (TSP) Baskets	-	-	I	-	-	-	-	-	-
HVT Flooding Valves (MOV)	IW-V001, V002	2	I	Yes/Yes	Yes/Yes	Yes/Yes	-	Closed	As Is
Reactor Cavity Flooding Valves (MOV)	IW-V003, V004	2	I	Yes/Yes	Yes/Yes	Yes/Yes	-	Closed	As Is

Table 2.4.2-2 (2 of 2)

Component Name	Item No.	ASME Section III Class	Seismic Category	Class 1E/ Harsh Envir. Qual.	Control/ Display at MCR	Control/ Display at RSR	Control Signal	Active Safety Function	Loss of Motive Power Position
Boric Acid Make-up Pump Suction Piping Containment Isolation Valves (MOV)	IW-V005, V006	2	I	Yes/Yes	Yes/Yes	Yes/Yes	CIAS	Closed	As Is
IRWST Level Instrument Isolation Valves (SOV)	IW-V010, V011, V022, V023, V024, V025, V026, V027	2	I	Yes/Yes	Yes/Yes	Yes/Yes	-	Open	Open
HVT Level Instrument Isolation Valves (SOV)	IW-V012, V013, V014, V015, V016, V017, V028, V029, V030, V031	2	I	Yes/Yes	Yes/Yes	Yes/Yes	-	Open	Open
Reactor Cavity Level Instrument Isolation Valves (SOV)	IW-V018, V019, V020, V021, V032, V033, V034, V035	2	I	Yes/Yes	Yes/Yes	Yes/Yes	-	Open	Open
BAMP Suction Line Pressure Relief Valves	IW-V1003	2	I	-/Yes	-/-	-/-	-	Open /Closed	-

(1) Dash(-) indicates not applicable.

Table 2.4.2-3

In-containment Water Storage System Instrument List

Instrument Name	Item No.	Location	ASME Section III Class	Seismic Category	Class 1E/ Harsh Envir. Qual.	Display/ Alarm at MCR	Display/ Alarm at RSR
IRWST Level	L-390, 391, 392, 393	Auxiliary Bldg.	-	I	Yes/Yes	Yes/Yes	Yes/Yes
IRWST Temperature	T-390, 391, 392, 393	Containment	-	I	Yes/Yes	Yes/Yes	Yes/Yes
IRWST Pressure	P-390, 391, 392, 393	Containment	-	I	Yes/Yes	Yes/No	Yes/No
HVT Level	L-394, 395, 396, 397 (Wide Range)	Auxiliary Bldg.	-	I	Yes/Yes	Yes/No	Yes/No
	L-403 (Narrow Range)	Auxiliary Bldg.	-	II	No/No	No/Yes	No/Yes
Reactor Cavity Level	L-397, 398, 399, 400	Auxiliary Bldg.	-	I	Yes/Yes	Yes/No	Yes/No
Swing Panel Position Switch	Z-012 thru 023	Containment	-	II	No/No	No/Yes	No/Yes

(1) Dash(-) indicates not applicable.

Table 2.4.2-4 (1 of 7)

In-containment Water Storage System ITAAC

Design Commitment	Inspections, Tests, Analyses	Acceptance Criteria
1. The functional arrangement of the IWSS is as described in the Design Description of Subsection 2.4.2.1 and in Table 2.4.2-1 and as shown in Figure 2.4.2-1.	1. Inspection of the as-built IWSS will be performed.	1. The as-built IWSS conforms with the functional arrangement as described in the Design Description of Subsection 2.4.2.1 and in Table 2.4.2-1 and as shown in Figure 2.4.2-1.
2.a The ASME Code components identified in Table 2.4.2-2 are designed and constructed in accordance with ASME Section III requirements.	2.a Inspection of the as-built ASME Code components identified in Table 2.4.2-2 will be performed and documented in the ASME data report(s).	2.a The ASME Section III data report(s) exist and conclude that the as-built ASME Code components identified in Table 2.4.2-2 are designed and constructed in accordance with ASME Section III requirements.
2.b The ASME Code piping, including supports, identified in Table 2.4.2-1 is designed and constructed in accordance with ASME Section III requirements.	2.b Inspection of the as-built ASME Code piping, including supports, identified in Table 2.4.2-1 will be performed and documented in the ASME data report(s).	2.b The ASME Section III data report(s) exist and conclude that the as-built ASME Code piping, including supports, identified in Table 2.4.2-1 is designed and constructed in accordance with ASME Section III requirements.
3.a Pressure boundary welds in ASME Code components identified in Table 2.4.2-2 meet ASME Section III requirements.	3.a Inspections of the as-built pressure boundary welds in ASME Code components identified in Table 2.4.2-2 will be performed in accordance with the ASME Section III.	3.a A report exists and concludes that the ASME Section III requirements are met for non-destructive examination of the as-built pressure boundary welds in ASME Code components identified in Table 2.4.2-2.
3.b Pressure boundary welds in ASME Code piping identified in Table 2.4.2-1 meet ASME Section III requirements.	3.b Inspections of the as-built pressure boundary welds in ASME Code piping identified in Table 2.4.2-1 will be performed in accordance with the ASME Section III.	3.b A report exists and concludes that the ASME Section III requirements are met for non-destructive examination of the as-built pressure boundary welds in ASME Code piping identified in Table 2.4.2-1.

Table 2.4.2-4 (2 of 7)

Design Commitment	Inspections, Tests, Analyses	Acceptance Criteria
4.a The ASME Code components identified in Table 2.4.2-2 retain their pressure boundary integrity at their design pressure.	4.a A hydrostatic test will be conducted on the as-built ASME Code components identified in Table 2.4.2-2 required to be hydrostatically tested by the ASME Section III.	4.a A report exists and concludes that the results of the hydrostatic test of the as-built ASME Code components identified in Table 2.4.2-2 conform with ASME Section III requirements.
4.b The ASME Code piping identified in Table 2.4.2-1 retains its pressure boundary integrity at its design pressure.	4.b A hydrostatic test will be conducted on the as-built ASME Code piping identified in Table 2.4.2-1 required to be hydrostatically tested by the ASME Section III.	4.b A report exists and concludes that the results of the hydrostatic test of the as-built ASME Code piping identified in Table 2.4.2-1 conform with ASME Section III requirements.
5.a The seismic Category I components and instruments identified in Tables 2.4.2-2 and 2.4.2-3, including the supports and anchorages, withstand seismic design basis loads without loss of safety function.	5.a.i Inspections will be performed to verify that the as-built seismic Category I components and instruments are located in the seismic Category I structure.	5.a.i The as-built seismic Category I components and instruments identified in Tables 2.4.2-2 and 2.4.2-3 are located in the seismic Category I structure.
	5.a.ii Type tests, analyses or a combination of type tests and analyses of seismic Category I components and instruments will be performed.	5.a.ii A report exists and concludes that the seismic Category I components and instruments identified in Tables 2.4.2-2 and 2.4.2-3 withstand seismic design basis loads without loss of safety function.
	5.a.iii Inspections will be performed to verify that the as-built seismic Category I components and instruments, including the supports and anchorages, are seismically bounded by the tested or analyzed conditions.	5.a.iii A report exists and concludes that the as-built seismic Category I components and instruments identified in Tables 2.4.2-2 and 2.4.2-3, including the supports and anchorages, are seismically bounded by the tested or analyzed conditions.

Table 2.4.2-4 (3 of 7)

Design Commitment	Inspections, Tests, Analyses	Acceptance Criteria
5.b The seismic Category I piping, including supports, identified in Table 2.4.2-1 withstands seismic design basis loads without loss of safety function.	5.b.i Inspections will be performed to verify that the as-built seismic Category I piping, including supports, is located in the seismic Category I structure(s).	5.b.i The as-built seismic Category I piping, including supports, identified in Table 2.4.2-1 is located in the seismic Category I structure(s).
	5.b.ii Inspections and analyses of the as-built seismic Category I piping, including supports, will be performed.	5.b.ii A report exists and concludes that the as-built seismic Category I piping, including supports, identified in Table 2.4.2-1 withstands seismic design basis loads without loss of safety function.
6.a The Class 1E components and instruments identified in Tables 2.4.2-2 and 2.4.2-3 as being qualified for a harsh environment (and the associated wiring, cables, and terminations) withstand the environmental conditions that would exist before, during, and following a design basis accident without loss of safety function for the time required to perform the safety function.	6.a.i Type tests or a combination of type tests and analyses will be performed on Class 1E components and instruments located in a harsh environment.	6.a.i A report exists and concludes that the Class 1E components and instruments identified in Tables 2.4.2-2 and 2.4.2-3 as being qualified for a harsh environment withstand the environmental conditions that would exist before, during, and following a design basis accident without loss of safety function for the time required to perform the safety function.
	6.a.ii Inspections will be performed on the as-built Class 1E components and instruments (and the associated wiring, cables, and terminations) located in a harsh environment.	6.a.ii A report exists and concludes that the as-built Class 1E components and instruments identified in Tables 2.4.2-2 and 2.4.2-3 as being qualified for a harsh environment (and the associated wiring, cables, and terminations) are bounded by type testsor a combination of type tests and analyses.

Table 2.4.2-4 (4 of 7)

Design Commitment		Inspections, Tests, Analyses		Acceptance Criteria	
6.b	Each of the Class 1E components and instruments identified in Tables 2.4.2-2 and 2.4.2-3 is powered from its respective Class 1E division.	6.b	Tests will be performed by providing a test signal in only one Class 1E division at a time.	6.b	The test signal exists at the Class 1E components and instruments identified in Tables 2.4.2-2 and 2.4.2-3 as being powered from the Class 1E division under test.
6.c	Physical separation and electrical isolation are provided (1) between Class 1E divisions and (2) between Class 1E divisions and non-Class 1E divisions.	6.c	Inspection of the as-built Class 1E divisions will be performed.	6.c	Physical separation and electrical isolation exist in accordance with NRC RG 1.75 (1) between Class 1E divisions and (2) between Class 1E divisions and non-Class 1E divisions.
7.a	The IWSS safety-related valves are functionally designed and qualified to perform their safety-related function under the full range of fluid flow, differential pressure, electrical, and temperature conditions up to and including design basis accident conditions.	7.a.i	A type test or a combination of type test and analysis will be performed of the IWSS safety-related valves.	7.a.i	A Functional Qualification Report performed in conformance to ASME QME-1-2007, as accepted in Regulatory Guide 1.100 Revision 3, exists and concludes that the IWSS safety-related valves listed in Table 2.4.2-2 are functionally designed and qualified to perform their safety-related function under the full range of fluid flow, differential pressure, electrical, and temperature conditions up to and including design basis accident conditions.

Table 2.4.2-4 (5 of 7)

Design Commitment	Inspections, Tests, Analyses	Acceptance Criteria
7.a (cont.)	7.a.ii A diagnostic stroke test and analysis will be performed of the IWSS safety-related valves under preoperational temperature, differential pressure, and flow conditions.	7.a.ii Each IWSS safety-related valve listed in Table 2.4.2-2 strokes fully open and fully closed by remote operation (or manual operation if a manually operated valve) under preoperational temperature, differential pressure, and flow conditions. Analysis based on sufficient diagnostic data demonstrates that the valves will perform at their design basis capability as established by the type test performed in accordance with 7.a.i.
7.b After loss of motive power, MOVs and SOVs identified in Table 2.4.2-2 assume the indicated loss of motive power position.	7.b Test of the as-built MOVs and SOVs will be performed under the conditions of loss of motive power.	7.b Upon loss of motive power, each as-built MOV or SOV identified in Table 2.4.2-2 assumes the indicated loss of motive power position.
8.a Controls exist in the MCR to open and close the MOVs and SOVs identified in Table 2.4.2-2.	8.a Tests will be performed using the controls in the MCR to open and close the MOVs and SOVs.	8.a Controls in the as-built MCR open and close the MOVs and SOVs identified in Table 2.4.2-2.
8.b Controls exist in the RSR to open and close the MOVs and SOVs identified in Table 2.4.2-2.	8.b Test will be performed using the controls in the RSR to open and close the MOVs and SOVs.	8.b Controls in the as-built RSR open and close the MOVs and SOVs identified in Table 2.4.2-2.
8.c Displays and alarms exist and are retrievable in the MCR as defined in Tables 2.4.2-2 and 2.4.2-3.	8.c Inspections of the as-built displays and alarms in the MCR will be performed.	8.c Displays and alarms exist and are retrieved in the as-built MCR as defined in Tables 2.4.2-2 and 2.4.2-3.

Table 2.4.2-4 (6 of 7)

Design Commitment	Inspections, Tests, Analyses	Acceptance Criteria
8.d Displays and alarms exist and are retrievable in the RSR as defined in Tables 2.4.2-2 and 2.4.2-3.	8.d Inspections of the as-built displays and alarms in the RSR will be performed.	8.d Displays and alarms exist and are retrieved in the as-built RSR as defined in Tables 2.4.2-2 and 2.4.2-3.
9.a The IWSS provides borated water for safety injection and containment spray during design basis events.	9.a.i Inspection of the as-built IRWST will be performed.	9.a.i A report exists and concludes that the usable water volume of the as-built IRWST is at least 2,373.5m^3 (83,818ft^3)
	9.a.ii Inspection of the as-built IRWST sump strainers will be performed.	9.a.ii A report exists and concludes that each of the four as-built IRWST sump strainers have the following features - a minimum surface area of 55.74 m^2 (600 ft^2) - perforated plate with maximum hole diameter of 2.38 mm (3/32 inches) - top of strainers is below IRWST minimum water level for ESF pump operation under design basis accident conditions
	9.a.iii Inspection of the as-built coatings used in the containment will be performed.	9.a.iii A report exists and concludes that the as-built coatings used in the containment are consistent with the evaluation of IRWST sump strainer debris generation, debris transport, and downstream effect.

Table 2.4.2-4 (7 of 7)

Design Commitment	Inspections, Tests, Analyses	Acceptance Criteria
9.a (cont.)	9.a.iv Inspection of the as-built insulation used in the containment will be performed.	9.a.iv A report exists and concludes that the as-built insulation in containment is consistent with the evaluation of IRWST sump strainer performance.
	9.a.v Inspection of the as-built trash rack at each entrance to HVT will be conducted.	9.a.v The trash rack has a maximum grid opening of 38.1×38.1 mm (1.5×1.5 inches).
9.b The IWSS provides post-LOCA pH control with tri-sodium phosphate (TSP).	9.b Inspection will be performed for the capacity of the TSP baskets.	9.b The TSP basket located in HVT has the following combined capacity of TSP: ≥ 26,976 kg (59,472 lbs).
9.c The IWSS provides protection from overpressure and vacuum of the IRWST.	9.c Inspection of the as-built swing panels identified in Table 2.4.2-2 will be conducted.	9c Three as-built swing panels on each vent stack located on the concrete slab of the IRWST exist and each swing panel has a minimum effective opening area of 2.86m^2 (30.8ft^2)
10. The IWSS non-metallic parts, materials, and lubricants used in safety-related mechanical equipment perform their safety-related function up to the end of their qualified life in the design basis harsh environmental conditions (both internal service conditions and external environmental conditions) experienced during normal operations, anticipated operational occurrences, design-basis accidents, and post accident conditions.	10. A type test or a combination of type test and analysis will be performed of the IWSS non-metallic parts, materials, and lubricants used in safety-related mechanical equipment.	10. A report exists and concludes that the non-metallic parts, materials, and lubricants used in safety-related mechanical equipment listed in Table 2.4.2-2 perform their safety-related function up to the end of their qualified life under the design basis harsh environmental conditions (both internal service conditions and external environmental conditions) experienced during normal operations, anticipated operational occurrences, design-basis accidents, and post accident conditions.

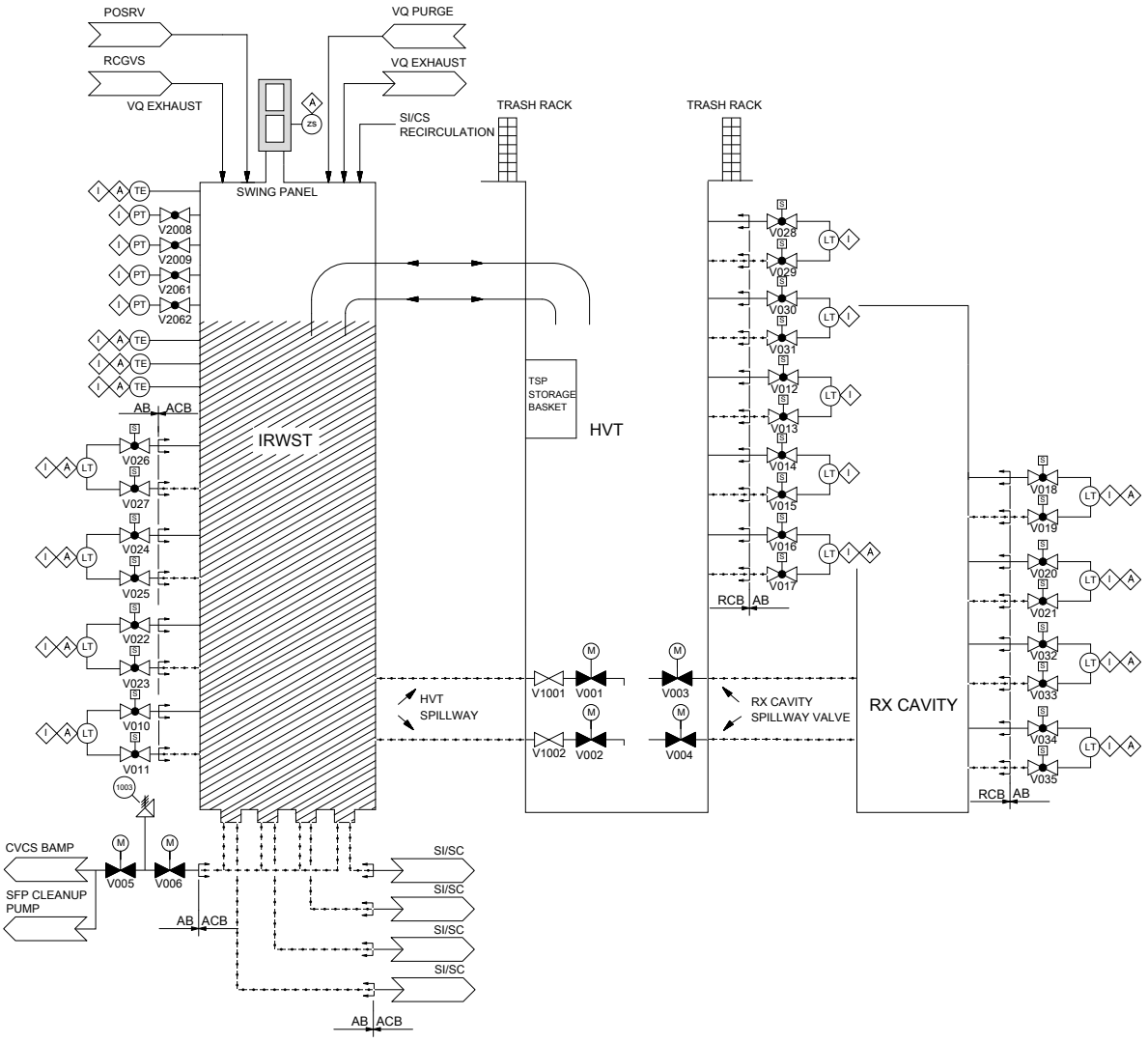

Figure 2.4.2-1 In-containment Water Storage System

2.4.3 Safety Injection System

2.4.3.1 Design Description

The safety injection system (SIS) is a safety-related system which injects borated water into the reactor vessel to provide core cooling and reactivity control in response to design basis accidents. The SIS also provides core cooling during feed and bleed operation, in conjunction with the pilot operated safety relief valves (POSRVs). The major components of the SIS are four safety injection pumps (SIPs), four identical safety injection tanks (SITs), and associated valves.

The SIS is located in the auxiliary building and containment building.

1.a. The functional arrangement of the SIS is as described in the Design Description of Subsection 2.4.3.1 and in Table 2.4.3-1 and as shown in Figure 2.4.3-1.

1.b. Physical separation exists between the four redundant trains of the SIS as described in Section 6.3.1.5 of DCD Tier 2.

2.a The ASME Code components identified in Table 2.4.3-2 are designed and constructed in accordance with ASME Section III requirements.

2.b The ASME Code piping, including supports, identified in Table 2.4.3-1 are designed and constructed in accordance with ASME Section III requirements.

3.a Pressure boundary welds in ASME Code components identified in Table 2.4.3-2 meet ASME Section III requirements.

3.b Pressure boundary welds in ASME Code piping identified in Table 2.4.3-1 meet ASME Section III requirements.

4.a The ASME Code components identified in Table 2.4.3-2 retain their pressure boundary integrity at their design pressure.

4.b The ASME Code piping identified in Table 2.4.3-1 retains its pressure boundary integrity at its design pressure.

5.a The seismic Category I components and instruments identified in Tables 2.4.3-2 and 2.4.3-3, including the supports and anchorages, can withstand seismic design basis loads without loss of safety function.

5.b The seismic Category I piping, including supports, identified in Table 2.4.3-1 can withstand seismic design basis loads without loss of safety function.

6.a The Class 1E components and instruments identified in Tables 2.4.3-2 and 2.4.3-3 as being qualified for a harsh environment (and the associated wiring, cables, and terminations) can withstand the environmental conditions that would exist before, during, and following a design basis accident without loss of safety function for the time required to perform the safety function.

6.b Each of the Class 1E components and instruments identified in Tables 2.4.3-2 and 2.4.3-3 is powered from its respective Class 1E division.

6.c Physical separation and electrical isolation are provided (1) between Class 1E divisions, and (2) between Class 1E divisions and non-Class 1E divisions.

7.a The SIS safety-related valves are functionally designed and qualified to perform their safety-related function under the full range of fluid flow, differential pressure, electrical, and temperature conditions with debris-laden coolant fluids up to and including design basis accident conditions.

7.b After loss of motive power, MOVs, SOVs and AOVs identified in Table 2.4.3-2 assume the indicated loss of motive power position.

8.a Controls exist in the MCR to start and stop the SIPs, and to open and close the MOVs, SOVs, and AOVs identified in Table 2.4.3-2.

8.b Controls exist in the RSR to start and stop the SIPs, and to open and close the MOVs, SOVs, and AOVs identified in Table 2.4.3-2.

8.c Displays and alarms exist and are retrievable in the MCR as defined in Tables 2.4.3-2 and 2.4.3-3.

8.d Displays and alarms exist and are retrievable in the RSR as defined in Tables 2.4.3-2 and 2.4.3-3.

9.a The SIS provides RCS makeup, boration, and safety injection during design basis accidents.

9.b The SIS safety-related pumps are functionally designed and qualified to perform their safety-related function under the full range of fluid flow, differential pressure, electrical, and temperature conditions with debris laden coolant fluids up to and including design basis accident conditions.

9.c The SI pumps have sufficient net positive suction head (NPSH).

9.d The as-built SI pumps deliver flow between 3,915 L/min (1,034 gpm) to 4,201 L/min (1,110 gpm) to the reactor vessel within 40 seconds following receipt of signals simulating ESF-SIAS or DPS-SIAS

9.e The SI pumps can be tested at full flow during plant operation.

9.f The SIS can be manually realigned for simultaneous hot leg injection and direct vessel injection (DVI).

9.g The pumps identified in Table 2.4.3-2 start after receiving an ESF-SIAS or DPS-SIAS.

9.h A confirmatory-open interlock is provided to automatically open the SIT discharge valve upon receipt of an ESF-SIAS or DPS-SIAS.

10. The piping systems identified in Table 2.4.3-1 as qualified for LBB meets the LBB acceptance criteria, or protection of safety-related SSCs from the dynamic effects associated with postulated failures of the high energy piping system is provided.

11. The emergency core cooling function of the SIS will not be impaired by gas entrainment based on monitoring and venting at pre-determined intervals.

12. The SIS non-metallic parts, materials, and lubricants used in safety-related mechanical equipment perform their safety-related function up to the end of their qualified life in the design basis harsh environmental conditions (both internal service conditions and external environmental conditions) experienced during normal operations, anticipated operational occurrences, design-basis accidents, and post accident conditions.

2.4.3.2 Inspections, Tests, Analyses, and Acceptance Criteria

Table 2.4.3-4 specifies the inspections, tests, analyses, and acceptance criteria for the SIS.

Table 2.4.3-1 (1 of 2)

Safety Injection System Equipment and Piping Location/Characteristics

Equipment and Piping Name	Location	ASME Section III Class	Seismic Category	LBB
Safety Injection Pump	Auxiliary Building	2	I	No
Safety Injection Tank	Containment Building	2	I	No
SI piping and valves between the DVI penetration and including the check valves SI-540, 541, 542, 543 upstream of the DVI penetration	Containment Building	1	I	Yes
SI piping and valves upstream of and excluding the check valves SI-540, 541, 542, 543 upstream of the DVI penetration	Containment Building/ Auxiliary Building	2	I	Yes
Hot leg injection piping downstream of and including the check valves SI-523, 533	Containment Building	1	I	No
Hot leg injection piping upstream of and excluding the check valves SI-523, 533	Containment Building/ Auxiliary Building	2	I	No
SIT piping and valves on the RCS side of and including the check valves SI-215, 225, 235, 245	Containment Building	1	I	Yes

Table 2.4.3-1 (2 of 2)

Equipment and Piping Name	Location	ASME Section III Class	Seismic Category	LBB
SIT piping and valves on the SIT side of and excluding the check valves SI-215, 225, 235, 245	Containment Building	2	I	No
Piping and valves on the RCS side of and including leakage drain isolation valves SI-618, 628, 638, 648	Containment Building	1	I	No
SIT nitrogen supply piping up and including valves SI-612, 622, 632, 642, 619, 629, 639, 649	Containment Building	2	I	No
SIT nitrogen vent piping up and including valves SI-613, 623, 633, 643, 605, 606, 607, 608	Containment Building	2	I	No
SIP mini-flow line	Containment Building/ Auxiliary Building	2	I	No
SIT filling piping excluding the piping between the valve SI-290 and SI-293	Containment Building/ Auxiliary Building	2	I	No
SIT filling piping between the valve SI-290 and SI-293	Auxiliary Building	3	I	No
Piping from IRWST to SIP	Containment Building/ Auxiliary Building	2	I	No

Table 2.4.3-2 (1 of 4)

Safety Injection System Component List

Component Name	Item No.	ASME Section III Class	Seismic Category	Class 1E/ Harsh Envir. Qual.	Control/ Display at MCR	Control/ Display at RSR	Control Signal	Active Safety Function	Loss of Motive Power Position
Safety Injection Pump	SIP - 01, 02, 03, 04	2	I	Yes/No	Yes/Yes	Yes/Yes (SIP #1, 2 only)	ESF-SIAS, DPS-SIAS, Remote Manual	Start	Stop
Safety Injection Tank	SIT - 01, 02, 03, 04	2	I	-/-	-	-	-	-	-
IRWST Return Line Check V/V	SI - 100, 101	2	I	-/- (2)	-	-	-	Open /Closed	-
SI Line Check V/V	SI - 113, 123, 133, 143	2	I	-/-	-	-	-	Open /Closed	-
SIT Check V/V	SI - 215, 225, 235, 245	1	I	-/-	-	-	-	Open /Closed	-
SI Line Check V/V	SI - 217, 227, 237, 247	1	I	-/-	-	-	-	Open /Closed	-
SI Pump Orifice Bypass V/V (Manual)	SI - 218, 219, 254, 255	2	I	-/-	-	-	-	-	-
SIT Fill Line Isolation V/V (Manual)	SI - 290	2	I	-/-	-	-	-	Closed	-
SIT Fill Line Isolation V/V (Manual)	SI - 293	2	I	-/-	-	-	-	Closed	-
SI Pump Suction and Discharge Isolation V/V (Manual)	SI - 130, 131, 402, 435, 447, 470, 476, 478	2	I	-/-	-/Yes	-/No	Manual	-	-

Table 2.4.3-2 (2 of 4)

Component Name	Item No.	ASME Section III Class	Seismic Category	Class 1E/ Harsh Envir. Qual.	Control/ Display at MCR	Control/ Display at RSR	Control Signal	Active Safety Function	Loss of Motive Power Position
SI Combined Miniflow Line Isolation V/V (MOV)	SI - 302, 303	2	I	Yes/No	Yes/Yes	-	Remote Manual	Open	As Is
IRWST Isolation V/V (MOV)	SI - 304, 305, 308, 309	2	I	Yes/No	Yes/Yes	Yes/Yes (SI-304/305 only)	Remote Manual	Open /Closed	As Is
SI Hot Leg Injection Line Isolation V/V (MOV)	SI - 321, 331	2	I	Yes/No	Yes/Yes	-	Remote Manual	Open /Closed	As Is
IRWST Return Line Isolation V/V (MOV)	SI - 395	2	I	Yes/Yes	Yes/Yes	-	Remote Manual	Closed	As Is
SI Pump Discharge Check V/V	SI - 404, 405, 434, 446	2	I	-/-	-	-	-	Open /Closed	-
SIT Fill Line Relief V/V	SI - 474	2	1	-/Yes	-	-	-	Open	-
SI Miniflow Check V/V	SI - 424, 426, 448, 451	2	I	-/-	-	-	-	Open /Closed	-
SI Hot Leg Injection Line Check V/V	SI - 522, 523, 532, 533	1	I	-/-	-	-	-	Open /Closed	-
SI Line Check V/V	SI - 540, 541, 542, 543	1	I	-/-	-	-	-	Open /Closed	-

Table 2.4.3-2 (3 of 4)

Component Name	Item No.	ASME Section III Class	Seismic Category	Class 1E/ Harsh Envir. Qual.	Control/ Display at MCR	Control/ Display at RSR	Control Signal	Active Safety Function	Loss of Motive Power Position
SI Low Flow Control V/V (MOV)	SI - 602, 603	2	I	Yes/No	Yes/Yes	Yes/Yes	Remote Manual	Open /Closed	As Is
SI Hot Leg Isolation V/V (MOV)	SI - 604, 609	2	I	Yes/No	Yes/Yes	-	Remote Manual	Open /Closed	As Is
SIT Atmospheric Vent Isolation V/V (SOV)	SI - 605, 606, 607, 608, 613, 623, 633, 643	2	I	Yes/Yes	Yes/Yes	Yes/Yes	Remote Manual	Open /Closed	Closed
SIT Fill & Drain Isolation V/V (AOV)	SI - 611, 621, 631, 641	2	I	Yes/Yes	Yes/Yes	-	ESF-SIAS, DPS-SIAS, Remote Manual	Open /Closed	Closed
SIT N_2 Supply Isolation V/V (AOV)	SI - 612, 619, 622, 629, 632, 639, 642, 649	2	I	No/No	Yes/Yes	-	Remote Manual	Closed	Closed
SIT Discharge Isolation V/V (MOV)	SI - 614, 624, 634, 644	1	I	Yes/Yes	Yes/Yes	Yes/Yes	ESF-SIAS, DPS-SIAS, Above Low Pressurizer Pressure (P-103A, 104B) Setpoint Remote Manual	Open /Closed	As Is

Table 2.4.3-2 (4 of 4)

Component Name	Item No.	ASME Section III Class	Seismic Category	Class 1E/ Harsh Envir. Qual.	Control/ Display at MCR	Control/ Display at RSR	Control Signal	Active Safety Function	Loss of Motive Power Position
SI Line Isolation V/V (MOV)	SI - 616, 626, 636, 646	2	I	Yes/No	Yes/Yes	Yes/Yes (SI-626/646 only)	ESF-SIAS, DPS-SIAS, Remote Manual	Open /Closed	As Is
SI Check V/V Leakage Isolation V/V (AOV)	SI - 618, 628, 638, 648	1	I	Yes/Yes	Yes/Yes	-	ESF-SIAS, DPS-SIAS, Remote Manual	Closed	Closed
SIT Fill Line Isolation V/V (AOV)	SI - 682	2	1	Yes/No	Yes/Yes	-	ESF-SIAS, DPS-SIAS, Remote Manual	Closed	Closed
SIS Fill Isolation V/V (Manual)	SI - 700, 701, 714, 715	2	I	-/-	-	-	-	-	-
SIS Fill Check V/V	SI - 704, 705, 706, 707	2	I	-/-	-	-	-	-	-

(1) Dash(-) indicates not applicable.

Table 2.4.3-3

Safety Injection System Instrument List

Instrument Name	Item No.	ASME Section III Class	Seismic Category	Class 1E/ Harsh Envir. Qual.	Display/ Alarm at MCR	Display/ Alarm at RSR
SI Pump Flow	F - 306, 307 308, 309	-	II	-/- (2)	No/Yes	-
SI DVI Flow	F - 341A, 321B 331C, 311D	3	I	Yes/No	Yes/No	Yes/No (F-341A/ 321B only)
SI Hot Leg Injection Flow	F - 390C, 391D	3	I	Yes/No	Yes/No	Yes/No
SIT Level (Wide Range)	L - 341A, 321B 331C, 311D	3	I	Yes/Yes	Yes/No	-
SIT Level (Narrow Range)	L - 312, 313 322, 323 332, 333 342, 343	-	II	-/-	Yes/Yes	-
SI Pump Discharge Pressure	P - 306, 307 308, 309	-	II	-/-	Yes/No	Yes/No (P-308/ 309 only)
SI DVI Pressure	P - 319, 329 339, 349	-	II	-/-	Yes/Yes	-
SI Hot Leg Injection Pressure	P - 390, 391	-	II	-/-	Yes/Yes	-
SIT Pressure (Wide Range)	P - 341A, 321B 331C, 311D	3	I	Yes/Yes	Yes/No	Yes/No
SIT Pressure (Narrow Range)	P - 312, 313 322, 323 332, 333 342, 343	-	II	-/-	Yes/Yes	-

(1) Dash (-) indicates not applicable.

Table 2.4.3-4 (1 of 12)

Safety Injection System ITAAC

Design Commitment	Inspections, Tests, Analyses	Acceptance Criteria
1.a The functional arrangement of the SIS is as described in the Design Description of Subsection 2.4.3.1 and in Table 2.4.3-1 and as shown in Figure 2.4.3-1.	1.a Inspection of the as-built SIS will be conducted.	1.a The as-built SIS conforms with the functional arrangement as described in the Design Description of Subsection 2.4.3.1 and in Table 2.4.3-1 and as shown in Figure 2.4.3-1.
1.b Physical separation exists between the four redundant trains of the SIS.	1.b Inspections will be performed of the as-built SIS.	1.b Components of each train located outside containment are in separate enclosed areas, and the components of each train located inside containment are physically separated to preclude the loss of the safety-related function by common-cause failure from postulated dynamic effects, internal flooding, and fire.
2.a The ASME Code components identified in Table 2.4.3-2 are designed and constructed in accordance with ASME Section III requirements.	2.a Inspection of the as-built ASME Code components identified in Table 2.4.3-2 will be performed and documented in the ASME data report(s).	2.a The ASME Section III data report(s) exist and conclude that the as-built ASME Code components identified in Table 2.4.3-2 are designed and constructed in accordance with ASME Section III requirements.
2.b The ASME Code piping, including supports, identified in Table 2.4.3-1 are designed and constructed in accordance with ASME Section III requirements.	2.b Inspection of the as-built ASME Code piping, including supports, identified in Table 2.4.3-1 will be performed and documented in the ASME data report(s).	2.b The ASME Section III data report(s) exist and conclude that the as-built ASME Code piping, including supports, identified in Table 2.4.3-1 are designed and constructed in accordance with ASME Section III requirements.

Table 2.4.3-4 (2 of 12)

Design Commitment	Inspections, Tests, Analyses	Acceptance Criteria
3.a Pressure boundary welds in ASME Code components identified in Table 2.4.3-2 meet ASME Section III requirements.	3.a Inspections of the as-built pressure boundary welds in ASME Code components identified in Table 2.4.3-2 will be performed in accordance with the ASME Section III.	3.a A report exists and concludes that the ASME Section III requirements are met for non-destructive examination of the as-built pressure boundary welds in ASME Code components identified in Table 2.4.3-2.
3.b Pressure boundary welds in ASME Code piping identified in Table 2.4.3-1 meet ASME Section III requirements.	3.b Inspections of the as-built pressure boundary welds in ASME Code piping identified in Table 2.4.3-1 will be performed in accordance with the ASME Section III.	3.b A report exists and concludes that the ASME Section III requirements are met for non-destructive examination of the as-built pressure boundary welds in ASME Code piping identified in Table 2.4.3-1.
4.b The ASME Code piping identified in Table 2.4.3-1 retains its pressure boundary integrity at its design pressure.	4.b A hydrostatic test will be conducted on the as-built ASME Code piping identified in Table 2.4.3-1 required to be hydrostatically tested by the ASME Section III.	4.b A report exists and concludes that the results of the hydrostatic test of the as-built ASME Code piping identified in Table 2.4.3-1 conform with ASME Section III requirements.
5.a The seismic Category I components and instruments identified in Tables 2.4.3-2 and 2.4.3-3, including the supports and anchorages, can withstand seismic design basis loads without loss of safety function.	5.a.i Inspections will be performed to verify that the as-built seismic Category I components and instruments are located in the seismic Category I structure(s).	5.a.i The as-built seismic Category I components and instruments identified in Tables 2.4.3-2 and 2.4.3-3 are located in the seismic Category I structure(s).
	5.a.ii Type tests, analyses, or a combination of type tests and analyses of seismic Category I components and instruments will be performed.	5.a.ii A report exists and concludes that the seismic Category I components and instruments identified in Tables 2.4.3-2 and 2.4.3-3 can withstand seismic design basis loads without loss of safety function.

Table 2.4.3-4 (3 of 12)

Design Commitment	Inspections, Tests, Analyses	Acceptance Criteria
5.a (cont.)	5.a.iii Inspections will be performed to verify that the as-built seismic Category I components and instruments, including the supports and anchorages, are seismically bounded by the tested or analyzed conditions.	5.a.iii A report exists and concludes that the as-built seismic Category I components and instruments identified in Tables 2.4.3-2 and 2.4.3-3, including the supports and anchorages, are seismically bounded by the tested or analyzed conditions.
5.b The seismic Category I piping, including supports, identified in Table 2.4.3-1 can withstand seismic design basis loads without loss of safety function.	5.b.i Inspections will be performed to verify that the as-built seismic Category I piping, including supports, is located in the seismic Category I structure(s).	5.b.i The as-built seismic Category I piping, including supports, identified in Table 2.4.3-1 is located in the seismic Category I structure(s).
	5.b.ii Inspections and analyses of the as-built seismic Category I piping, including supports, will be performed.	5.b.ii A report exists and concludes that the as-built seismic Category I piping, including supports, identified in Table 2.4.3-1 can withstand seismic design basis loads without loss of safety function.

Table 2.4.3-4 (4 of 12)

Design Commitment	Inspections, Tests, Analyses	Acceptance Criteria
6.a The Class 1E components and instruments identified in Tables 2.4.3-2 and 2.4.3-3 as being qualified for a harsh environment (and the associated wiring, cables, and terminations) can withstand the environmental conditions that would exist before, during, and following a design basis accident without loss of safety function for the time required to perform the safety function.	6.a.i Type tests or a combination of type tests and analyses will be performed on Class 1E components and instruments located in a harsh environment.	6.a.i A report exists and concludes that the Class 1E components and instruments identified in Tables 2.4.3-2 and 2.4.3-3 as being qualified for a harsh environment can withstand the environmental conditions that would exist before, during, and following a design basis accident without loss of safety function for the time required to perform the safety function.
	6.a.ii Inspection will be performed on the as-built Class 1E components, and instruments (and the associated wiring, cables, and terminations) located in a harsh environment.	6.a.ii A report exists and concludes that the as-built Class 1E components and instruments identified in Tables 2.4.3-2 and 2.4.3-3 as being qualified for a harsh environment (and the associated wiring, cables, and terminations) are bounded by type tests or a combination of type tests and analyses.
6.b Each of the Class 1E components and instruments identified in Tables 2.4.3-2 and 2.4.3-3 is powered from its respective Class 1E division.	6.b Tests will be performed by providing a test signal in only one Class 1E division at a time.	6.b The test signal exists at the as-built Class 1E components and instruments identified in Tables 2.4.3-2 and 2.4.3-3 as being powered from the Class 1E division under test.
6.c Physical separation and electrical isolation are provided (1) between Class 1E divisions, and (2) between Class 1E divisions and non-Class 1E divisions.	6.c Inspections of the as-built Class 1E divisions will be performed.	6.c Physical separation and electrical isolation exist in accordance with NRC RG 1.75 (1) between Class 1E divisions and (2) between Class 1E divisions and non-Class 1E divisions.

Table 2.4.3-4 (5 of 12)

Design Commitment	Inspections, Tests, Analyses	Acceptance Criteria
7.a The SIS safety-related valves are functionally designed and qualified to perform their safety-related function under the full range of fluid flow, differential pressure, electrical, and temperature conditions with debris-laden coolant fluids up to and including design basis accident conditions.	7.a.i A type test or a combination of type test and analysis will be performed of the SIS safety-related valves.	7.a.i A Functional Qualification Report performed in conformance to ASME QME-1-2007, as accepted in Regulatory Guide 1.100 Revision 3, and a report addressing valve functional operability with debrisladen coolant fluids exist and conclude that the SIS safety-related valves listed in Table 2.4.3-2 are functionally designed and qualified to perform their safety-related function under the full range of fluid flow, differential pressure, electrical, and temperature conditions with debris laden coolant fluids up to and including design basis accident conditions.
	7.a.ii A diagnostic stroke test and analysis will be performed of the SIS safety-related valves under preoperational temperature, differential pressure, and flow conditions.	7.a.ii Each SIS safety-related valve listed in Table 2.4.3-2 strokes fully open and fully closed by remote operation (or manual operation if a manually operated valve) under preoperational temperature, differential pressure, and flow conditions. Analysis based on sufficient diagnostic data demonstrates that the valves will perform at their design-basis capability as established by the type test performed in accordance with 7.a.i.
	7.a.iii Tests of the as-built check valves will be performed under pre-operational test pressure, temperature, and fluid flow conditions.	7.a.iii Each as-built check valve changes position as indicated in Table 2.4.3-2 under pre-operational test conditions.

Table 2.4.3-4 (6 of 12)

Design Commitment		Inspections, Tests, Analyses		Acceptance Criteria	
7.b	After loss of motive power, MOVs, SOVs and AOVs identified in Table 2.4.3-2 assume the indicated loss of motive power position.	7.b	Tests of the as-built MOVs, SOVs and AOVs will be performed under the conditions of loss of motive power.	7.b	Upon loss of motive power, each as-built MOV, SOV or AOV identified in Table 2.4.3-2 assumes the indicated loss of motive power position.
8.a	Controls exist in the MCR to start and stop the SIPs, and to open and close the MOVs, SOVs, and AOVs indicated in Table 2.4.3-2.	8.a	Tests will be performed using controls in the MCR to start and stop the SIPs, and to open and close the MOVs, SOVs, and AOVs.	8.a	Controls in the as-built MCR start and stop the SIPs, and open and close the MOVs, SOVs, and AOVs indicated in Table 2.4.3-2.
8.b	Controls exist in the RSR to start and stop the SIPs, and to open and close the MOVs and SOVs indicated in Table 2.4.3-2.	8.b	Tests will be performed using controls in the RSR to start and stop the SIPs, and to open and close the MOVs and SOVs.	8.b	Controls in the as-built RSR start and stop the SIPs, and open and close the MOVs and SOVs indicated in Table 2.4.3-2.
8.c	Displays and alarms exist and are retrievable in the MCR as defined in Tables 2.4.3-2 and 2.4.3-3.	8.c	Inspections of the as-built displays and alarms in the MCR will be performed.	8.c	Displays and alarms exist and are retrieved in the as-built MCR as defined in Tables 2.4.3-2 and 2.4.3-3.
8.d	Displays and alarms exist and are retrievable in the RSR as defined in Tables 2.4.3-2 and 2.4.3-3.	8.d	Inspections of the as-built displays and alarms in the RSR will be performed.	8.d	Displays and alarms exist and are retrieved in the as-built RSR as defined in Tables 2.4.3-2 and 2.4.3-3.
9.a	The SIS provides RCS makeup, boration, and safety injection during design basis accidents.	9.a.i	With SITs pressurized to normal operation pressure of 42.9 kg/cm^{2}G (610±1.4 psig) and the RCS depressurized to atmospheric pressure, a discharge test for each as-built SIT will be conducted.	9.a.i	A report exists and concludes that the total water volume injected from each as-built SIT into the reactor vessel is ≥ 50.7 m^3(1,790 ft^3). The water volume injected from each SIT into reactor vessel at large flow rate (prior to flow switching to small flow rate) is ≥ 22.7 m^3 (800 ft^3).

Table 2.4.3-4 (7 of 12)

Design Commitment	Inspections, Tests, Analyses	Acceptance Criteria
9.a (cont.)	9.a.ii Tests and analyses of the as-built SIT system will be performed to calculate the resistance coefficients.	9.a.ii Resistance coefficient K of the as-built SIT including the discharge line is greater than or equal to 10 and less than or equal to 25 before flow turndown and greater than or equal to 80 and less than or equal to 120 after flow turndown.
	9.a.iii A test of the SI pumps injecting into the reactor vessel will be performed with the reactor vessel at atmospheric pressure. Analysis will be performed to convert the test results from the test condition to the design condition.	9.a.iii A report exists and concludes that the injection test results for each as-built SI pump, when converted to design conditions, demonstrate that each as-built SI pump meets the following parameters: a pump differential pressure equal to or greater than 123.8 kg/cm^2D (1,761 psid) at minimum flow, and an injection flow rate of IRWST water greater than or equal to 3,915 L/min (1,034 gpm) and no more than or equal to 4,201 L/min (1,110 gpm).
	9.a.iv Inspections of the as-built SITs will be performed.	9.a.iv The nominal internal volume of each as-built SIT is greater than or equal to 68.1 m^3 (2,406 ft^3).

Table 2.4.3-4 (8 of 12)

Design Commitment	Inspections, Tests, Analyses	Acceptance Criteria
9.b The SIS safety-related pumps are functionally designed and qualified to perform their safety-related function under the full range of fluid flow, differential pressure, electrical, and temperature conditions with debris laden coolant fluids up to and including design basis accident conditions.	9.b.i A type test or a combination of type test and analysis will be performed of the SIS system safety-related pumps.	9.b.i A Functional Qualification Report performed in conformance to ASME QME-1, as accepted in Regulatory Guide 1.100 and a report addressing pump functional operability with debris-laden coolant fluids, exist and conclude that the SIS safety-related pumps listed in Table 2.4.3-2 are functionally designed and qualified to perform their safety-related function under the full range of fluid flow, differential pressure, electrical, and temperature conditions with debrisladen coolant fluids up to and including design basis accident conditions.
	9.b.ii Inspections will be performed of each as-built pump identified in Table 2.4.3-2.	9.b.ii Each as-built pump identified in Table 2.4.3-2 is bounded by the type tests or a combination of type tests and analyses

Table 2.4.3-4 (9 of 12)

Design Commitment	Inspections, Tests, Analyses	Acceptance Criteria
9.c The SI pumps have sufficient net positive suction head (NPSH).	9.c Tests to measure the as-built SI pump suction pressure will be performed. Inspections and analysis to determine NPSH available to each SI pump will be performed. The analyses will consider vendor test results of required NPSH and the effects of: - Pressure losses for pump inlet piping and components, - Pressure losses for pump suction strainers due to debris blockage, - Suction from the IRWST while the water level is at the minimum value, - Maximum expected fluid temperature, - No increase in containment pressure from that present prior to postulated LOCAs Effective required NPSH will be additionally evaluated considering uncertainties.	9.c A report exists and concludes that the as-built NPSH available to each SI pump is greater than the effective required NPSH of 6.71 m (22 ft).
9.d The as-built SI pumps deliver flow between 3,915 L/min (1,034 gpm) to 4,201 L/min (1,110 gpm) to the reactor vessel within 40 seconds following receipt of signals simulating ESF-SIAS or DPS-SIAS.	9.d.i Testing will be performed using signals simulating an ESF-SIAS	9.d.i The as-built SI pumps deliver between 3,915 L/min (1,034 gpm) to 4,201 L/min (1,110 gpm) to the reactor vessel within 40 seconds following receipt of signals simulating ESF-SIAS, including diesel generator load start time.

Table 2.4.3-4 (10 of 12)

Design Commitment	Inspections, Tests, Analyses	Acceptance Criteria
9.d (cont.)	9.d.ii Testing will be performed using signals simulating a DPS-SIAS.	9.d.ii The as-built SI pumps deliver between 3,915 L/min (1,034 gpm) to 4,201 L/min (1,110 gpm) to the reactor vessel within 40 seconds following receipt of signals simulating DPS-SIAS, including diesel generator load start time.
9.e The SI pumps can be tested at full flow during plant operation.	9.e Testing of the SIS will be performed by manually aligning SI flow to the IRWST and manually starting each SI pump.	9.e Each as-built SI pump has a flow capacity of at least 3,407 L/min (900 gpm) to the IRWST through the test line.
9.f The SIS can be manually realigned for simultaneous hot leg injection and direct vessel injection (DVI).	9.f Testing will be performed with the system manually aligned for simultaneous DVI and hot leg injection.	9.f Each as-built SI pump injects no less than or equal to 3,195 L/min (1,034 gpm) and no more than or equal to 4,201 L/min (1,110 gpm) through each hot leg and DVI line with the RCS at atmospheric pressure.
9.g The pumps identified in Table 2.4.3-2 start after receiving an ESF-SIAS or DPS-SIAS.	9.g Tests will be performed on the as-built pumps in Table 2.4.3-2 using simulated signals.	9.g The as-built pumps in Table 2.4.3-2 start after receiving a simulated ESF-SIAS or DPS-SIAS.
9.h A confirmatory-open interlock is provided to automatically open the SIT discharge valve upon receipt of an ESF-SIAS or DPS-SIAS.	9.h Tests will be performed using simulated signals.	9.h The as-built SIT discharge valves in Table 2.4.3-2 automatically open upon receipt of simulated ESF-SIAS or DPS-SIAS.

Table 2.4.3-4 (11 of 12)

Design Commitment	Inspections, Tests, Analyses	Acceptance Criteria
10. The piping systems identified in Table 2.4.3-1as qualified for LBB meet the LBB acceptance criteria, or protection of safety-related SSCs from the dynamic effects associated with postulated failures of the high energy piping system is provided.	10. For the piping systems identified in Table 2.4.3-1 as being qualified for LBB, inspections and analyses will be performed for conformance with the LBB acceptance criteria, or inspections and analyses of the as-built high-energy piping and protective features for safety-related SSCs will be performed.	10. For the piping systems identified in Table 2.4.3-1 as qualified for LBB, either an LBB evaluation report exists and concludes that the LBB acceptance criteria are met by the as-built piping system including the final detailed design parameters, or a pipe rupture analysis report exists and concludes that the as-built safety-related SSCs are protected against or are qualified to withstand the effects of postulated failures of the as-built high-energy piping system.
11. The emergency core cooling function of the SIS will not be impaired by gas entrainment based on monitoring and venting at pre-determined intervals.	11.a An analysis of the potential for gas entrainment will be performed to identify specific gas intrusion mechanisms that affect each local and system high point of the as-built configuration of the SIS. The analysis will document the periodic monitoring and venting interval for the as-built system based on design limits.	11.a A report exists and identifies the specific gas intrusion mechanisms that affect each local and system high point of the as-built configuration of the SIS and documents the required periodic monitoring and venting interval for the as-built SIS system to ensure the emergency core cooling function of the SIS will not be impaired by gas entrainment.
	11.b An inspection will be performed to verify high point vents are installed in the as-built SIS based on the analysis.	11.b High point vents are installed in the SIS based on the analysis.

Table 2.4.3-4 (12 of 12)

Design Commitment	Inspections, Tests, Analyses	Acceptance Criteria
12. The SIS non-metallic parts, materials, and lubricants used in safety-related mechanical equipment perform their safety-related function up to the end of their qualified life in the design basis harsh environmental conditions (both internal service conditions and external environmental conditions) experienced during normal operations, anticipated operational occurrences, design-basis accidents, and post accident conditions.	12. A type test or a combination of type test and analysis will be performed of the SIS non-metallic parts, materials, and lubricants used in safety-related mechanical equipment.	12. A report exists and concludes that the non-metallic parts, materials, and lubricants used in safety-related mechanical equipment listed in Table 2.4.3-2 perform their safety-related function up to the end of their qualified life under the design basis harsh environmental conditions (both internal service conditions and external environmental conditions) experienced during normal operations, anticipated operational occurrences, design-basis accidents, and post accident conditions.

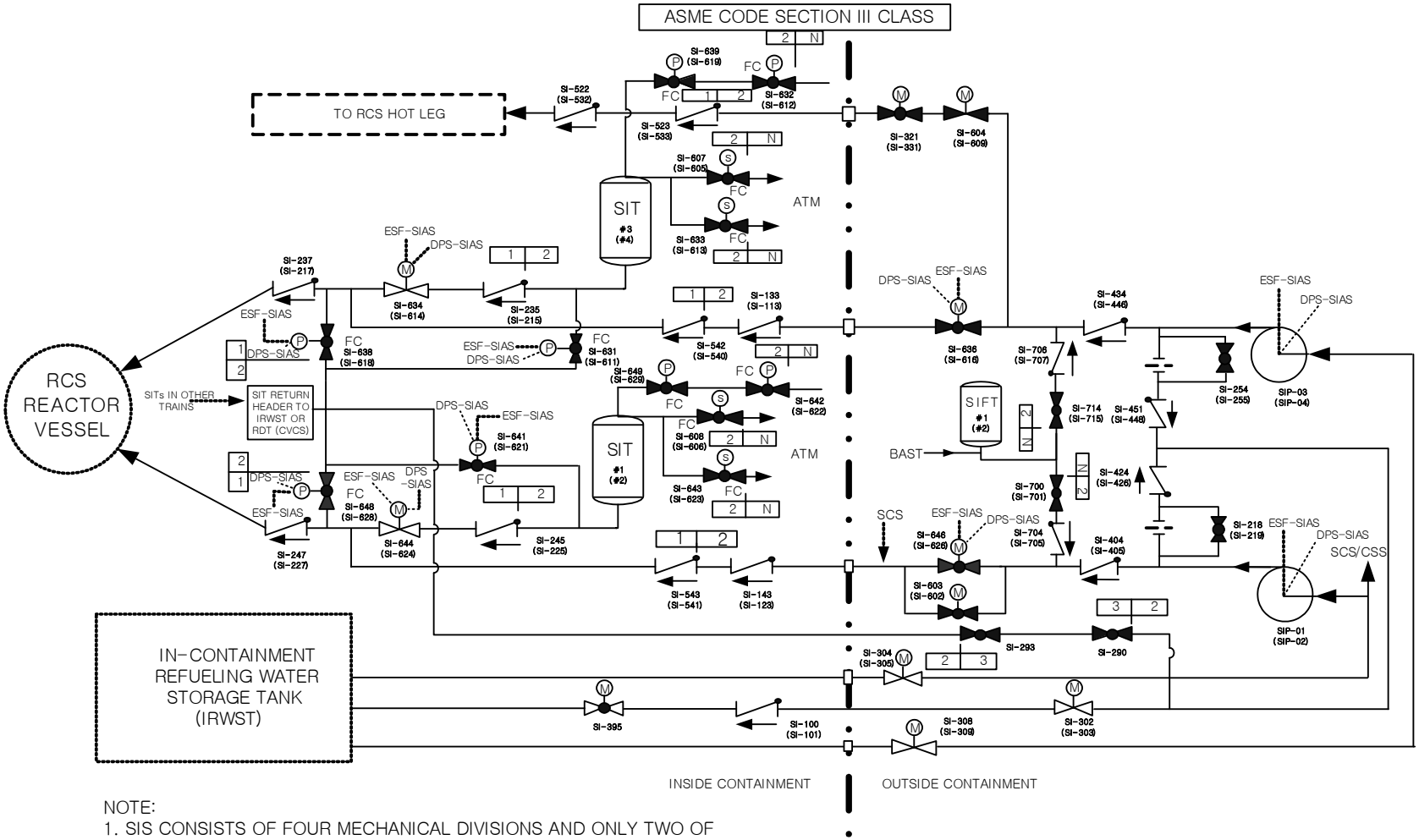

NOTE:
1. SIS CONSISTS OF FOUR MECHANICAL DIVISIONS AND ONLY TWO OF FOUR DIVISIONS ARE SHOWN.
2. THE COMPONENT NAMES IN PARENTHESES REFER TO THE OTHER DIVISION.

Figure 2.4.3-1 Safety Injection System

2.4.4 Shutdown Cooling System

2.4.4.1 Design Description

The shutdown cooling system (SCS) is a safety-related system which removes decay heat from the reactor coolant system (RCS) and transfers the heat to the component cooling water system (CCWS) during a planned reactor shutdown operation and an accident.

The SCS is designed such that the shutdown cooling pumps (SCPs) are identical and functionally interchangeable with containment spray pumps (CSPs) for containment spray function. Provisions are made to control the valves used in the SCS/CSS interconnection. The SCS consists of heat exchangers and two pumps. One SCS pump is capable of meeting the safety-grade cooldown criteria and two SCS pumps are required to meet the normal cooldown design criteria.

The SCS is located in the containment building and auxiliary building.

1. The functional arrangement of the SCS is as described in the Design Description of Subsection 2.4.4.1 and in Table 2.4.4-1 and as shown in Figure 2.4.4-1.

2.a The ASME Code components identified in Table 2.4.4-2 are designed and constructed in accordance with ASME Section III requirements.

2.b The ASME Code piping, including supports, identified in Table 2.4.4-1 are designed and constructed in accordance with ASME Section III requirements.

3.a Pressure boundary welds in ASME Code components identified in Table 2.4.4-2 meet ASME Section III requirements.

3.b Pressure boundary welds in ASME Code piping identified in Table 2.4.4-1 meet ASME Section III requirements.

4.a The ASME Code components identified in Table 2.4.4-2 retain their pressure boundary integrity at their design pressure.

4.b The ASME Code piping identified in Table 2.4.4-1 retains its pressure boundary integrity at its design pressure.

5.a The seismic Category I components and instruments identified in Tables 2.4.4-2 and 2.4.4-3, including the supports and anchorages, can withstand seismic design basis loads without loss of safety function.

5.b The seismic Category I piping, including supports, identified in Table 2.4.4-1 can withstand seismic design basis loads without loss of safety function.

6.a The Class 1E components and instruments identified in Tables 2.4.4-2 and 2.4.4-3 as being qualified for a harsh environment (and the associated wiring, cables, and terminations) can withstand the environmental conditions that would exist before, during, and following a design basis accident without loss of safety function for the time required to perform the safety function.

6.b Each of the Class 1E components and instruments identified in Tables 2.4.4-2 and 2.4.4-3 is powered from its respective Class 1E division.

6.c Physical separation and electrical isolation are provided (1) between Class 1E divisions, and (2) between Class 1E divisions and non- Class 1E divisions.

7.a The SCS safety-related valves are functionally designed and qualified to perform their safety-related function under the full range of fluid flow, differential pressure, electrical, and temperature conditions with debris-laden coolant fluids up to and including design basis accident conditions.

7.b After loss of motive power, MOVs identified in Table 2.4.4-2 assume the indicated loss of motive power position.

8.a Controls exist in the MCR to start and stop the SCPs, and to open and close the MOVs identified in Table 2.4.4-2.

8.b Controls exist in the RSR to start and stop the SCPs, and to open and close the MOVs identified in Table 2.4.4-2.

8.c Displays and alarms exist and are retrievable in the MCR as defined in Tables 2.4.4-2 and 2.4.4-3.

8.d Displays and alarms exist and are retrievable in the RSR as defined in Tables 2.4.4-2 and 2.4.4-3.

9.a The SCS cools the reactor by removing decay heat and other residual heat from the reactor core and the RCS during the normal plant shutdown and cool down conditions.

9.b The SCS suction line relief valves provide RCS low temperature overpressure protection (LTOP).

9.c The SCS safety-related pumps are functionally designed and qualified to perform their safety-related function under the full range of fluid flow, differential pressure, electrical, and temperature conditions with debris laden coolant fluids up to and including design basis accident conditions.

9.d Each SCP has sufficient net positive suction head (NPSH) in each operating configuration.

9.e Each SCP has a full flow test capability during a normal plant operating condition when the pump suction is aligned to the IRWST and the discharge is aligned to the IRWST.

9.f A containment spray actuation signal (CSAS) or engineered safety features-safety injection actuation signal (ESF-SIAS) starts the SCP only when the SCP is aligned for containment spray pump (CSP) function. The CSP in the same division will not start on those signals.

9.g The piping of SCS contains no loop seals and maintains a horizontal or downward slope from the RCS to the SCPs, with the exception of the section of piping adjacent to the pump suction flange.

10. The decay heat removal function of the SCS will not be impaired by gas entrainment based on monitoring and venting at pre-determined intervals.

11. The SCS non-metallic parts, materials, and lubricants used in safety-related mechanical equipment perform their safety-related function up to the end of their qualified life in the design basis harsh environmental conditions (both internal service conditions and external environmental conditions) experienced during normal operations, anticipated operational occurrences, design-basis accidents, and post accident conditions.

2.4.4.2 Inspections, Tests, Analyses, and Acceptance Criteria

Table 2.4.4-4 specifies the inspections, tests, analyses, and acceptance criteria for the SCS.

Table 2.4.4-1

Shutdown Cooling System Equipment and Piping Location/Characteristics

Equipment and Piping Name	Location	ASME Section III Class	Seismic Category	LBB
SCS suction piping and valves on the RCS side from RCS hot leg up to including the motor operated valves SI-653, 654	Containment Building	1	I	Yes
All SCS piping and valves not mentioned above up to and including the valves interfacing with systems of a lower classification.	Containment Building/ Auxiliary Building	2	I	No
Shutdown Cooling Pump Miniflow Heat Exchanger	Auxiliary Building	3 (Shell)/ 2 (Tube)	I (Shell)/ I (Tube)	No
Shutdown Cooling Heat Exchanger	Auxiliary Building	3 (Shell)/ 2 (Tube)	I (Shell)/ I (Tube)	No
Shutdown Cooling Pump	Auxiliary Building	2	I	No

Table 2.4.4-2 (1 of 3)

Shutdown Cooling System Components List

Component Name	Item No.	ASME Section III Class	Seismic Category	Class 1E/ Harsh Envir. Qual.	Control/ Display at MCR	Control/ Display at RSR	Control Signal	Active Safety Function	Loss of Motive Power Position
Shutdown Cooling Pump	SCP - 01, 02	2	I	Yes/No	Yes/Yes	Yes/Yes	CSAS or ESF-SIAS (2), Remote Manual	Start	Stop
SCS Suction Line Isolation Valve (MOV)	SI - 651, 652 653, 654	1	I	Yes/Yes	Yes/Yes	Yes/Yes	Remote Manual	Open /Closed	As Is
SCS Suction Line Isolation Valve (MOV)	SI - 655, 656	2	I	Yes/No	Yes/Yes	Yes/Yes	Remote Manual	Open /Closed	As Is
SCS Suction Line Relief Valve	SI - 179, 189	2	I	-/Yes	-/-	-/-	-(1)	Open	-
Shutdown Cooling Heat Exchanger	SDCHX - 01, 02	3 (Shell) /2 (Tube)	I (Shell) /I (Tube)	-/No	/-	-/-	-	-	-
SCS Line Isolation Valve (MOV)	SI - 600, 601	2	I	Yes/No	Yes/Yes	Yes/Yes	Remote Manual	Open /Closed	As Is
Shutdown Cooling Heat Exchanger Outlet Flow Control Valve (MOV)	SI - 310, 311	2	I	Yes/No	Yes/Yes	Yes/Yes	Remote Manual	Open /Closed	As Is
Shutdown Cooling Heat Exchanger Bypass Flow Control Valve (MOV)	SI - 312, 313	2	I	Yes/No	Yes/Yes	Yes/Yes	Remote Manual	Open /Closed	As Is

Table 2.4.4-2 (2 of 3)

Component Name	Item No.	ASME Section III Class	Seismic Category	Class 1E/ Harsh Envir. Qual.	Control/ Display at MCR	Control/ Display at RSR	Control Signal	Active Safety Function	Loss of Motive Power Position
CSP Suction Check Valve	SI - 157, 158	2	I	-/No	-/-	-/-	-	Open /Closed	-
SCP Suction Check Valve	SI - 159, 160	2	I	-/No	-/-	-/-	-	Open /Closed	-
SCP Miniflow Heat Exchanger	SCP MFHX - 01, 02	3 (Shell) /2 (Tube)	I (Shell) /I (Tube)	-/No	-/-	-/-	-	-	-
SCS Line Check Valve	SI - 168, 178	2	I	-/No	-/-	-/-	-	Open /Closed	-
SCP Discharge Check Valve	SI - 568, 569	2	I	-/No	-/-	-/-	-	Open /Closed	-
SCS Test Return Line Isolation Valve (MOV)	SI - 314, 315, 688, 693	2	I	Yes/No	Yes/Yes	Yes/Yes	Remote Manual	Closed	As Is
SCS/CSS Pump Suction Cross Connect Valve (MOV)	SI - 340, 342	2	I	Yes/No	Yes/Yes	Yes/Yes	Remote Manual	Closed	As Is
SCS/CSS Pump Discharge Cross Connect Valve (MOV)	SI - 341, 343	2	I	Yes/No	Yes/Yes	No/No	Remote Manual	Closed	As Is

Table 2.4.4-2 (3 of 3)

Component Name	Item No.	ASME Section III Class	Seismic Category	Class 1E/ Harsh Envir. Qual.	Control/ Display at MCR	Control/ Display at RSR	Control Signal	Active Safety Function	Loss of Motive Power Position
SCS Warmup Line Flow Control Valve (MOV)	SI - 690, 691	2	I	Yes/No	Yes/Yes	Yes/Yes	Remote Manual	Open /Closed	As Is
IRWST Return Line Isolation Valve (MOV)	SI - 300, 301	2	I	Yes/No	Yes/Yes	Yes/Yes	Remote Manual	Closed	As Is

(1) Dash(-) indicates not applicable.
(2) SCP starts on ESF-SIAS or CSAS only when the SCP is aligned for CSP function.

Table 2.4.4-3

Shutdown Cooling System Instruments List

Instrument Name	Item No	ASME Section III Class	Seismic Category	Class 1E/ Harsh Envir. Qual.	Display/ Alarm at MCR	Display/ Alarm at RSR
SCP suction line pressure	P-300, 301	-	II	No/No	Yes/No	-/- (1)
SCP discharge line pressure	P-302, 305	-	II	No/No	Yes/Yes	-/-
SDCHX inlet temperature	T-300A, 303B	3	I	Yes/No	Yes/Yes	Yes/No
SDCHX outlet temperature	T-301A, 304B	3	I	Yes/No	Yes/Yes	Yes/No
SDCHX outlet temperature	T-302A, 305B	3	I	Yes/No	Yes/No	-/-
SCP flowrate	F-302A, 305B	3	I	Yes/No	Yes/Yes	Yes/No

(1) Dash(-) indicates not applicable.

Table 2.4.4-4 (1 of 9)

Shutdown Cooling System ITAAC

Design Commitment	Inspections, Tests, Analyses	Acceptance Criteria
1. The functional arrangement of the SCS is as described in the Design Description of Subsection 2.4.4.1 and in Table 2.4.4-1 and as shown in Figure 2.4.4-1.	1. Inspection of the as-built SCS will be conducted.	1. The as-built SCS conforms with the functional arrangement as described in the Design Description of Subsection 2.4.4.1 and in Table 2.4.4-1 and as shown in Figure 2.4.4-1.
2.a The ASME Code components identified in Table 2.4.4-2 are designed and constructed in accordance with ASME Section III requirements.	2.a Inspection of the as-built ASME Code components identified in Table 2.4.4-2 will be performed and documented in the ASME data report(s).	2.a The ASME Section III data report(s) exist and conclude that the as-built ASME Code components identified in Table 2.4.4-2 are designed and constructed in accordance with ASME Section III requirements.
2.b The ASME code piping, including supports, identified in Table 2.4.4-1 is designed and constructed in accordance with ASME Section III requirements.	2.b Inspection of the as-built ASME Code piping, including supports, identified in Table 2.4.4-1 will be performed and documented in the ASME data report(s).	2.b The ASME Section III data report(s) exist and conclude that the as-built ASME Code piping, including supports, identified in Table 2.4.4-1 is designed and constructed in accordance with ASME Section III requirements.
3.a Pressure boundary welds in ASME Code components identified in Table 2.4.4-2 meet ASME Section III requirements.	3.a Inspections of the as-built pressure boundary welds in ASME Code components identified in Table 2.4.4-2 will be performed in accordance with the ASME Section III.	3.a A report exists and concludes that the ASME Section III requirements are met for non-destructive examination of the as-built pressure boundary welds in ASME Code components identified in Table 2.4.4-2.
3.b Pressure boundary welds in ASME Code piping identified in Table 2.4.4-1 meet ASME Section III requirements.	3.b Inspections of the as-built pressure boundary welds in ASME Code piping identified in Table 2.4.4-1 will be performed in accordance with the ASME Section III.	3.b A report exists and concludes that the ASME Section III requirements are met for non-destructive examination of the as-built pressure boundary welds in ASME Code piping identified in Table 2.4.4-1.

Table 2.4.4-4 (2 of 9)

Design Commitment	Inspections, Tests, Analyses	Acceptance Criteria
4.a The ASME Code components identified in Table 2.4.4-2 retain their pressure boundary integrity at their design pressure.	4.a A hydrostatic test will be conducted on the as-built ASME Code components identified in Table 2.4.4-2 required to be hydrostatically tested by the ASME Section III.	4.a A report exists and concludes that the results of the hydrostatic test of the as-built ASME Code components identified in Table 2.4.4-2 conform with ASME Section III requirements.
4.b The ASME Code piping identified in Table 2.4.4-1 retains its pressure boundary integrity at its design pressure.	4.b A hydrostatic test will be conducted on the as-built ASME Code piping identified in Table 2.4.4-1 required to be hydrostatically tested by the ASME Section III.	4.b A report exists and concludes that the results of the hydrostatic test of the as-built ASME Code piping identified in Table 2.4.4-1 conform with ASME Section III requirements.
5.a The seismic Category I components and instruments identified in Tables 2.4.4-2 and 2.4.4-3, including the supports and anchorages, can withstand seismic design basis loads without loss of safety function.	5.a.i Inspections will be performed to verify that the as-built seismic Category I components and instruments are located in the seismic Category I structure(s).	5.a.i ASME Code data report(s) exist and conclude that the as-built seismic Category I components and instruments identified in Tables 2.4.4-2 and 2.4.4-3 are located in a seismic Category I structure(s).
	5.a.ii Type tests, analyses or a combination of type tests and analyses of seismic Category I components and instruments will be performed.	5.a.ii A report exists and concludes that the seismic Category I components and instruments identified in Tables 2.4.4-2 and 2.4.4-3 can withstand seismic design basis loads without loss of safety function.
	5.a.iii Inspections will be performed to verify that the as-built seismic Category I components and instruments, including the supports and anchorages, are seismically bounded by the tested or analyzed conditions.	5.a.iii A report exists and concludes that the as-built seismic Category I components and instruments identified in Tables 2.4.4-2 and 2.4.4-3, including the supports and anchorages, are seismically bounded by the tested or analyzed conditions.

Table 2.4.4-4 (3 of 9)

Design Commitment	Inspections, Tests, Analyses	Acceptance Criteria
5.b The seismic Category I piping, including supports, identified in Table 2.4.4-1 can withstand seismic design basis loads without loss of safety function.	5.b.i Inspections will be performed to verify that the as-built seismic Category I piping, including supports, is located in the seismic Category I structure(s).	5.b.i The as-built seismic Category I piping, including supports, identified in Table 2.4.4-1 is located in the seismic Category I structure(s).
	5.b.ii Inspections and analyses of the as-built seismic Category I piping, including supports, will be performed.	5.b.ii A report exists and concludes that the as-built seismic Category I piping, including supports, identified in Table 2.4.4-1 can withstand seismic design basis loads without loss of safety function.
6.a The Class 1E components and instruments identified in Tables 2.4.4-2 and 2.4.4-3 as being qualified for a harsh environment (and the associated wiring, cables, and terminations) can withstand the environmental conditions that would exist before, during, and following a design basis accident without loss of safety function for the time required to perform the safety function.	6.a.i Type tests or a combination of type tests and analyses will be performed on Class 1E components and instruments located in a harsh environment.	6.a.i A report exists and concludes that the Class 1E components and instruments identified in Tables 2.4.4-2 and 2.4.4-3 as being qualified for a harsh environment can withstand the environmental conditions that would exist before, during, and following a design basis accident without loss of safety function for the time required to perform the safety function.
	6.a.ii Inspection will be performed on the as-built Class 1E components and instruments (and the associated wiring, cables, and terminations) located in a harsh environment.	6.a.ii A report exists and concludes that the as-built Class 1E components and instruments identified in Tables 2.4.4-2 and 2.4.4-3 as being qualified for a harsh environment (and the associated wiring, cables, and terminations) are bounded by type tests or a combination of type tests and analyses.

Table 2.4.4-4 (4 of 9)

Design Commitment		Inspections, Tests, Analyses		Acceptance Criteria	
6.b	Each of the Class 1E components and instruments identified in Tables 2.4.4-2 and 2.4.4-3 is powered from its respective Class 1E division.	6.b	Tests will be performed by providing a test signal in only one Class 1E division at a time.	6.b	The test signal exists at the Class 1E components and instruments identified in Tables 2.4.4-2 and 2.4.4-3 as being powered from the Class 1E division under test.
6.c	Physical separation and electrical isolation are provided (1) between Class 1E divisions and (2) between Class 1E divisions and non-Class 1E divisions.	6.c	Inspections of the as-built Class 1E divisions will be performed.	6.c	Physical separation and electrical isolation exist in accordance with NRC RG 1.75 (1) between these Class 1E divisions and (2) between Class 1E divisions and non-Class 1E divisions.
7.a	The SCS safety-related valves are functionally designed and qualified to perform their safety-related function under the full range of fluid flow, differential pressure, electrical, and temperature conditions with debris-laden coolant fluids up to and including design basis accident conditions.	7.a.i	A type test or a combination of type test and analysis will be performed of the SCS safety-related valves.	7.a.i	A Functional Qualification Report performed in conformance to ASME QME-1-2007, as accepted in Regulatory Guide 1.100 Revision 3, and a report addressing valve functional operability with debris-laden coolant fluids exist and conclude that the SCS safety-related valves listed in Table 2.4.4-2 are functionally designed and qualified to perform their safety-related function under the full range of fluid flow, differential pressure, electrical, and temperature conditions with debris laden coolant fluids up to and including design basis accident conditions.

Table 2.4.4-4 (5 of 9)

Design Commitment	Inspections, Tests, Analyses	Acceptance Criteria
7.a (cont.)	7.a.ii A diagnostic stroke test and analysis will be performed of the SCS safety-related valves under preoperational temperature, differential pressure, and flow conditions.	7.a.ii Each SCS safety-related valve listed in Table 2.4.4-2 strokes fully open and fully closed by remote operation (or manual operation if a manually operated valve) under preoperational temperature, differential pressure, and flow conditions. Analysis based on sufficient diagnostic data demonstrates that the valves will perform at their design-basis capability as established by the type test performed in accordance with 7.a.i.
	7.a.iii Tests of the as-built check valves will be performed under pre-operational test pressure, temperature, and fluid flow conditions.	7.a.iii Each as-built check valve changes position as indicated in Table 2.4.4-2 under pre-operational test conditions.
7.b After loss of motive power, MOVs identified in Table 2.4.4-2 assume the indicated loss of motive power position.	7.b Tests of the as-built MOVs will be performed under the conditions of loss of motive power.	7.b Upon loss of motive power, each as-built MOV identified in Table 2.4.4-2 assumes the indicated loss of motive power position.
8.a Controls exist in the MCR to start and stop the SCPs, and to open and close the MOVs identified in Table 2.4.4-2.	8.a Tests will be performed using the controls in the MCR to start and stop the SCPs, and to open and close the MOVs.	8.a Controls in the as-built MCR start and stop the SCPs, and open and close the MOVs identified in Table 2.4.4-2.
8.b Controls exist in the RSR to start and stop the SCPs, and to open and close the MOVs identified in Table 2.4.4-2.	8.b Tests will be performed using the controls in the RSR to start and stop the SCPs, and to open and close the MOVs.	8.b Controls in the as-built RSR start and stop the SCPs, and open and close the MOVs identified in Table 2.4.4-2.

Table 2.4.4-4 (6 of 9)

Design Commitment	Inspections, Tests, Analyses	Acceptance Criteria
8.c Displays and alarms exist and are retrievable in the MCR as defined in Tables 2.4.4-2 and 2.4.4-3.	8.c Inspections of the as-built displays and alarms in the MCR will be performed.	8.c Displays and alarms exist and are retrieved in the as-built MCR as defined in Tables 2.4.4-2 and 2.4.4-3.
8.d Displays and alarms exist and are retrievable in the RSR as defined in Tables 2.4.4-2 and 2.4.4-3.	8.d Inspections of the as-built displays and alarms in the RSR will be performed.	8.d Displays and alarms exist and are retrieved in the as-built RSR as defined in Tables 2.4.4-2 and 2.4.4-3.
9.a The SCS cools the reactor by removing decay heat and other residual heat from the reactor core and the RCS during the normal plant shutdown and cool down conditions.	9.a.i An analysis will be performed to determine the heat removal capability of each shutdown cooling heat exchanger (SDCHX).	9.a.i A report exists and concludes that the product of the overall heat transfer coefficient and the effective heat transfer area of each SDCHX is no less than 1.45×10^6 kcal/hr-°C (3.2×10^6 Btu/hr-°F).
	9.a.ii Tests will be performed to confirm that the as-built SCS can provide flow through the SDCHXs when the pump suction is aligned to the RCS hot leg and the discharge is aligned to DVI.	9.a.ii Each as-built SCP is sized to deliver 18,927 L/min (5,000 gpm) at a discharge head of 140.2 m (460 ft) excluding flow through miniflow heat exchanger.
9.b The SCS suction line relief valves provide RCS low temperature overpressure protection (LTOP).	9.b.i Inspections will be conducted on the as-built SCP suction relief valves to confirm that the rating value of the ASME Code name plate is greater than or equal to system relief requirements.	9.b.i The rating capacity recorded on the ASME Code name plate of the as-built valve is not less than the flow of 7,750 gpm required to provide low temperature overpressure protection for RCS.
	9.b.ii Tests and analysis in accordance with the ASME Section III will be performed to confirm LTOP relief capacity.	9.b.ii A report exists and concludes that LTOP relief valve has a capacity greater than or equal to 29,337 L/min (7,750 gpm) at a set pressure less than or equal to 37.3 kg/cm^{2}G (530 psig) to provide LTOP for the RCS.

Table 2.4.4-4 (7 of 9)

Design Commitment	Inspections, Tests, Analyses	Acceptance Criteria
9.c The SCS safety-related pumps are functionally designed and qualified to perform their safety-related function under the full range of fluid flow, differential pressure, electrical, and temperature conditions with debris laden coolant fluids up to and including design basis accident conditions.	9.c.i A type test or a combination of type test and analysis will be performed of the SCS system safety-related pumps.	9.c.i A Functional Qualification Report performed in conformance to ASME QME-1, as accepted in Regulatory Guide 1.100 and a report addressing pump functional operability with debris-laden coolant fluids, exist and conclude that the SCS safety-related pumps listed in Table 2.4.4-2 are functionally designed and qualified to perform their safety-related function under the full range of fluid flow, differential pressure, electrical, and temperature conditions with debrisladen coolant fluids up to and including design basis accident conditions.
	9.c.ii Inspections will be performed of each as-built pump identified in Table 2.4.4-2.	9.c.ii Each as-built pump identified in Table 2.4.4-2 is bounded by the type tests or a combination of type tests and analyses.
9.d Each SCP has sufficient net positive suction head (NPSH) in each operating configuration.	9.d Tests to measure the as-built SCP suction pressure will be performed. Inspections and analysis to determine NPSHA to each SCP will be performed.	9.d The as-built NPSHA in each operating configuration to each SCP is greater than the NPSH required of 5.8 m (19 ft).
9.e Each SCP has a full flow test capability during a normal plant operating condition when the pump suction is aligned to the IRWST and the discharge is aligned to the IRWST.	9.e Testing of each SCP will be performed when the pump suction is aligned to the IRWST and the discharge is aligned to the IRWST.	9.e Each SCP delivers flow to IRWST of 18,927 L/min (5,000 gpm) when it takes suction from the IRWST.

Table 2.4.4-4 (8 of 9)

Design Commitment		Inspections, Tests, Analyses		Acceptance Criteria	
9.f	For each SCS/CSS train combination, a containment spray actuation signal (CSAS) or engineered safety features-safety injection actuation signal (ESF-SIAS) starts the SCP only when the SCP is aligned for containment spray pump (CSP) function. The CSP in the same division will not start on those signals.	9.f.i	For each SCS/CSS train combination, testing of simulated CSAS or ESF-SIAS when the SCP is aligned for CSP function will be performed.	9.f.i	For each SCS/CSS train combination, SCP starts when receiving CSAS or ESF-SIAS only when the SCP is aligned for CSP function. The CSP in the same division will not start on those signals.
		9.f.ii	Testing of simulated CSAS or ESF-SIAS when the SCP is not aligned for CSP function will be performed.	9.f.ii	The SCP is not aligned for CSP function and the SCP does not start when receiving CSAS or ESF-SIAS.
9.g	The piping of the SCS contains no loop seals and maintains a horizontal or downward slope from the RCS to the SCPs, with the exception of the section of piping adjacent to the pump suction flange.	9.g	Inspection of the as-built piping will be conducted.	9.g	SCS piping contains no loop seals and maintains a horizontal or downward slope from the RCS to the SCPs, with the exception of the section of piping adjacent to the pump suction flange, which has an upward section of piping.
10.	The decay heat removal function of the SCS will not be impaired by gas entrainment based on monitoring and venting at pre-determined intervals.	10.a	An analysis of the potential for gas entrainment will be performed to identify specific gas intrusion mechanisms that affect each local and system high point of the as-built configuration of the SCS. The analysis will document the periodic monitoring and venting interval for the as-built system based on design limits.	10.a	A report exists and identifies the specific gas intrusion mechanisms that affect each local and system high point of the as-built configuration of the SCS and documents the required periodic monitoring and venting interval for the as-built SCS system to ensure the decay heat removal function of the SCS will not be impaired by gas entrainment.
		10.b	An inspection will be performed to verify high point vents are installed in the as-built SCS based on the analysis.	10.b	High point vents are installed in the SCS based on the analysis.

Table 2.4.4-4 (9 of 9)

Design Commitment	Inspections, Tests, Analyses	Acceptance Criteria
11. The SCS non-metallic parts, materials, and lubricants used in safety-related mechanical equipment perform their safety-related function up to the end of their qualified life in the design basis harsh environmental conditions (both internal service conditions and external environmental conditions) experienced during normal operations, anticipated operational occurrences, design-basis accidents, and post accident conditions.	11. A type test or a combination of type test and analysis will be performed of the SCS non-metallic parts, materials, and lubricants used in safety-related mechanical equipment.	11. A report exists and concludes that the non-metallic parts, materials, and lubricants used in safety-related mechanical equipment listed in Table 2.4.4-2 perform their safety-related function up to the end of their qualified life under the design basis harsh environmental conditions (both internal service conditions and external environmental conditions) experienced during normal operations, anticipated operational occurrences, design-basis accidents, and post accident conditions.

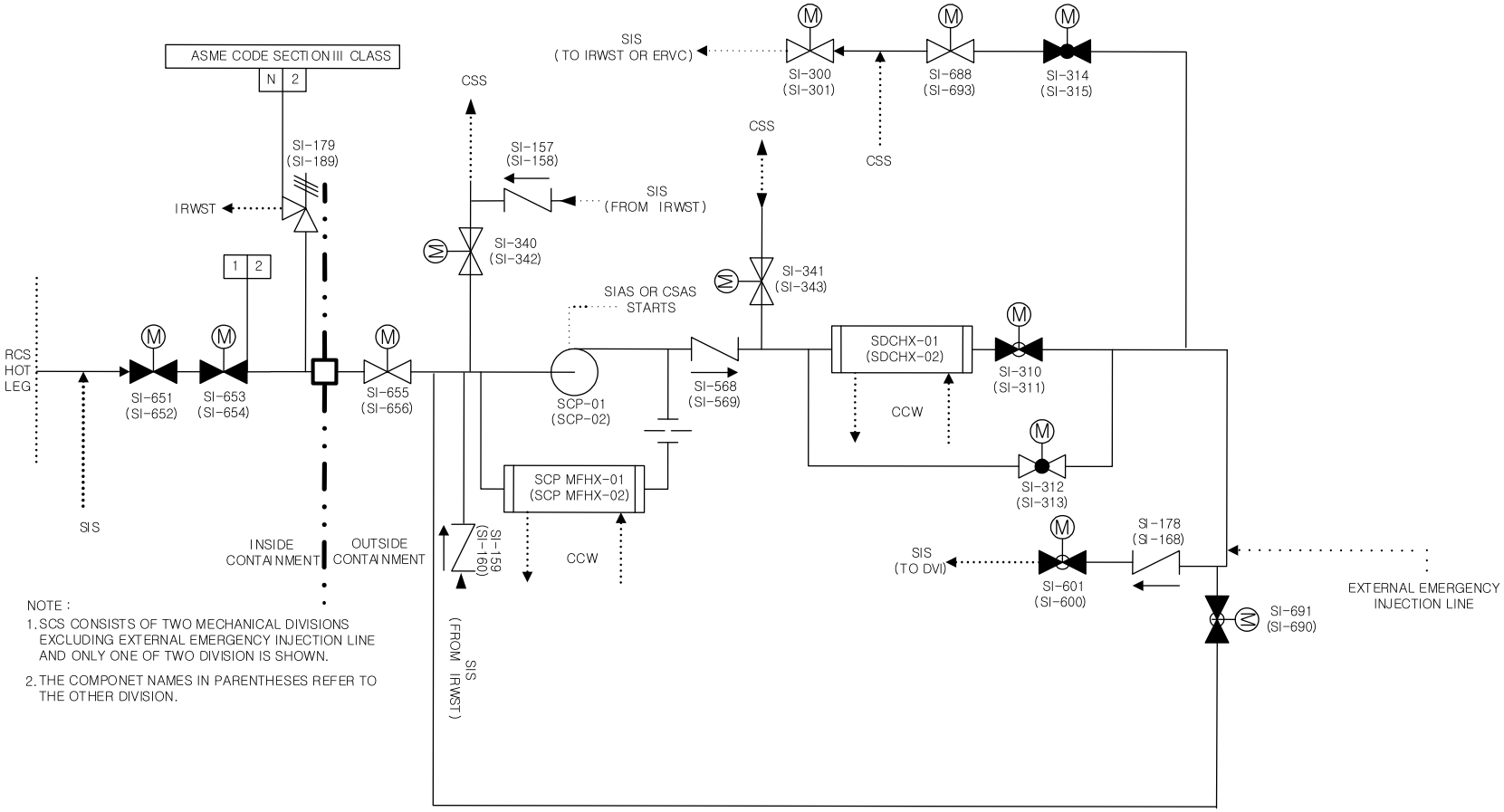

Figure 2.4.4-1 Shutdown Cooling System

2.4.5 Reactor Coolant Gas Vent System

2.4.5.1 Design Description

The reactor coolant gas vent system (RCGVS) is used to discharge non-condensible gases and steam from the high point of the reactor coolant system (RCS). The RCGVS is a safety-related system and provides a safety-grade means of remotely venting non-condensible gases from the reactor vessel closure head and the pressurizer steam space during post-accident conditions when large quantities of non-condensible gases accumulate in these high spots.

The RCGVS provides a safety-grade means to depressurize the RCS in the event that pressurizer main spray and auxiliary spray systems are unavailable.

The RCGVS effluent from the pressurizer or the reactor vessel closure head is transported to the in-containment refueling water storage tank (IRWST) through the RCGVS sparger for the safety vent function. The IRWST provides a water reservoir to condense the steam effluent and collect the RCS discharge. The RCGVS effluent from the pressurizer or the reactor vessel closure head is transported to the reactor drain tank (RDT) or the IRWST for the non-safety gas vent operation during plant startup and shutdown.

The RCGVS is located in the RCB and consists of piping, valves and instrumentation to vent non-condensible gases and/or steam from the RCS to either the RDT or the IRWST.

1. The functional arrangement of the RCGVS is as described in the Design Description of Subsection 2.4.5.1 and in Table 2.4.5-1 and as shown in Figure 2.4.5-1.

2.a The ASME Code components identified in Table 2.4.5-2 are designed and constructed in accordance with ASME Section III requirements.

2.b The ASME Code piping, including supports, identified in Table 2.4.5-1 is designed and constructed in accordance with ASME Section III requirements.

3.a Pressure boundary welds in ASME Code components identified in Table 2.4.5-2 meet ASME Section III requirements.

3.b Pressure boundary welds in ASME Code piping identified in Table 2.4.5-1 meet ASME Section III requirements.

4.a The ASME Code components identified in Table 2.4.5-2 retain their pressure boundary integrity at their design pressure.

4.b The ASME Code piping identified in Table 2.4.5-1 retains its pressure boundary integrity at its design pressure.

5.a The seismic Category I components and instruments identified in Tables 2.4.5-2 and 2.4.5-3, including the supports and anchorages, withstand seismic design basis loads without loss of safety function.

5.b The seismic Category I piping, including supports, identified in Table 2.4.5-1 withstands seismic design basis loads without loss of safety function.

6.a The Class 1E components and instruments identified in Tables 2.4.5-2 and 2.4.5-3 as being qualified for a harsh environment (and the associated wiring, cables, and terminations) withstand the environmental conditions that would exist before, during, and following a design basis accident without loss of safety function for the time required to perform the safety function.

6.b Each of the Class 1E components and instruments identified in Tables 2.4.5-2 and 2.4.5-3 is powered from its respective Class 1E division.

6.c Physical separation and electrical isolation are provided (1) between Class 1E divisions and (2) between Class 1E divisions and non-Class 1E divisions.

7.a The RCGVS safety-related valves are designed and qualified to perform their safety-related function under the full range of fluid flow, differential pressure, electrical, and temperature conditions up to and including design basis accident conditions.

7.b After loss of motive power, SOVs indicated in Table 2.4.5-2 assume the indicated loss of motive power position.

8.a Controls exist in the MCR to open and close SOVs identified in Table 2.4.5-2.

8.b Controls exist in the RSR to open and close SOVs identified in Table 2.4.5-2.

8.c Displays and alarms exist and are retrievable in the MCR as defined in Tables 2.4.5-2 and 2.4.5-3.

8.d Displays and alarms exist and are retrievable in the RSR as defined in Tables 2.4.5-2 and 2.4.5-3.

9. The RCGVS non-metallic parts, materials, and lubricants used in safety-related mechanical equipment perform their safety-related function up to the end of their qualified life in the design basis harsh environmental conditions (both internal service conditions and external environmental conditions) experienced during normal operations, anticipated operational occurrences, design-basis accidents, and post accident conditions.

2.4.5.2 Inspections, Tests, Analyses, and Acceptance Criteria

The inspections, tests, analyses, and associated acceptance criteria of the RCGVS are specified in Table 2.4.5-4.

Table 2.4.5-1

Reactor Coolant Gas Vent System Equipment and Piping Location/Characteristics

Equipment and Piping Name	Location	ASME Section III Class	Seismic Category
Pressurizer gas vent piping upstream of and including the vent isolation valves RG-V412 and 413	Containment	1	I
Reactor vessel closure head gas vent piping upstream of and including the vent isolation valves RG-V416 and 417	Containment	1	I
RCGVS gas vent piping from downstream of the vent isolation valves RG-V412, 413, 416, 417 (excluding) to the vent isolation valves RG-V418, 419, 420 (including)	Containment	2	I
RCGVS gas vent piping from downstream of the vent isolation valves RG-V418 to RDT	Containment	-	II
RCGVS gas vent piping from downstream of the vent isolation valves RG-V419, 420 to the IRWST anchor wall	Containment	-	II
RCGVS gas vent piping from downstream of the IRWST anchor wall to the end point of RCGVS sparger	Containment	3	I

Table 2.4.5-2

Reactor Coolant Gas Vent System Component List

Component Name	Item No.	ASME Section III Class	Seismic Category	Class 1E/ Harsh Envir. Qual.	Control/ Display at MCR	Control/ Display at RSR	Control Signal	Active Safety Function	Loss of Motive Power Position
Pressurizer Gas Vent Isolation Valves (SOV)	RG-V410, V411, V412, V413	1	I	Yes/Yes	Yes/Yes	Yes/Yes	-	Open /Closed	Closed
Reactor Vessel Closure Head Gas Vent Isolation Valves (SOV)	RG-V414, V415, V416, V417	1	I	Yes/Yes	Yes/Yes	Yes/Yes	-	Open /Closed	Closed
Gas Vent to IRWST Valves (SOV)	RG-V419, V420	2	I	Yes/Yes	Yes/Yes	Yes/Yes	-	Open	Closed
RCGVS Vacuum Breaker Valve	RG-V1421	3	I	-/Yes	-	-	-	Open /Closed	-

Table 2.4.5-3

Reactor Coolant Gas Vent System Instrument List

Instrument Name	Item No.	Location	ASME Section III Class	Seismic Category	Class 1E/ Harsh Envir. Qual.	Display/ Alarm at MCR	Display/ Alarm at RSR
Reactor Coolant Gas Vent Pressure	P-106	Containment	-	II	No/No	Yes/Yes	Yes/Yes
Discharge to the RDT Line Temperature	T-106	Containment	-	II	No/No	Yes/Yes	Yes/Yes
Discharge to the IRWST Line Temperature	T-107, 108	Containment	-	II	No/No	Yes/Yes	Yes/Yes

(1) Dash(-) indicates not applicable.

Table 2.4.5-4 (1 of 6)

Reactor Coolant Gas Vent System ITAAC

Design Commitment	Inspections, Tests, Analyses	Acceptance Criteria
1. The functional arrangement of the RCGVS is as described in the Design Description of Subsection 2.4.5.1 and in Table 2.4.5-1 and as shown in Figure 2.4.5-1.	1. Inspection of the as-built RCGVS will be performed.	1. The as-built RCGVS conforms with the functional arrangement as described in the Design Description of Subsection 2.4.5.1 and in Table 2.4.5-1 and as shown in Figure 2.4.5-1.
2.a The ASME Code components identified in Table 2.4.5-2 are designed and constructed in accordance with ASME Section III requirements.	2.a Inspection of the as-built ASME Code components identified in Table 2.4.5-2 will be performed and documented in the ASME data report(s).	2.a The ASME Section III data report(s) exist and conclude that the as-built ASME Code components identified in Table 2.4.5-2 are designed and constructed in accordance with ASME Section III requirements.
2.b The ASME Code piping, including supports, identified in Table 2.4.5-1 is designed and constructed in accordance with ASME Section III requirements.	2.b Inspection of the as-built ASME Code piping, including supports, identified in Table 2.4.5-1 will be performed and documented in the ASME data report(s).	2.b The ASME Section III data report(s) exist and conclude that the as-built ASME Code piping, including supports, identified in Table 2.4.5-1 is designed and constructed in accordance with ASME Section III requirements.
3.a Pressure boundary welds in ASME Code components identified in Table 2.4.5-2 meet ASME Section III requirements.	3.a Inspections of the as-built pressure boundary welds in ASME Code components identified in Table 2.4.5-2 will be performed in accordance with the ASME Section III.	3.a A report exists and concludes that the ASME Section III requirements are met for non-destructive examination of the as-built pressure boundary welds in ASME Code components identified in Table 2.4.5-2.
3.b Pressure boundary welds in ASME Code piping identified in Table 2.4.5-1 meet ASME Section III requirements.	3.b Inspections of the as-built pressure boundary welds in ASME Code piping identified in Table 2.4.5-1 will be performed in accordance with the ASME Section III.	3.b A report exists and concludes that the ASME Section III requirements are met for non-destructive examination of the as-built pressure boundary welds in ASME Code piping identified in Table 2.4.5-1.

Table 2.4.5-4 (2 of 6)

Design Commitment	Inspections, Tests, Analyses	Acceptance Criteria
4.a The ASME Code components identified in Table 2.4.5-2 retain their pressure boundary integrity at their design pressure.	4.a A hydrostatic test will be conducted on the as-built ASME Code components identified in Table 2.4.5-2 required to be hydrostatically tested by the ASME Section III.	4.a A report exists and concludes that the results of the hydrostatic test of the as-built ASME Code components identified in Table 2.4.5-2 conform with ASME Section III requirements.
4.b The ASME Code piping identified in Table 2.4.5-1 retains its pressure boundary integrity at its design pressure.	4.b A hydrostatic test will be conducted on the as-built ASME Code piping identified in Table 2.4.5-1 required to be hydrostatically tested by the ASME Section III.	4.b A report exists and concludes that the results of the hydrostatic test of the as-built ASME Code piping identified in Table 2.4.5-1 conform with ASME Section III requirements.
5.a The seismic Category I components and instruments identified in Tables 2.4.5-2 and 2.4.5-3, including the supports and anchorages, withstand seismic design basis loads without loss of safety function.	5.a.i Inspections will be performed to verify that the as-built seismic category I components and instruments are located in the seismic Category I structure.	5.a.i The as-built seismic Category I components and instruments identified in Tables 2.4.5-2 and 2.4.5-3 are located in the seismic Category I structure.
	5.a.ii Type tests, analyses or a combination of type tests and analyses of seismic Category I components and instruments will be performed.	5.a.ii A report exists and concludes that the seismic Category I components and instruments identified in Tables 2.4.5-2 and 2.4.5-3 withstand seismic design basis loads without loss of safety function.
	5.a.iii Inspections will be performed to verify that the as-built seismic Category I components and instruments, including the supports and anchorages, are seismically bounded by the tested or analyzed conditions.	5.a.iii A report exists and concludes that the as-built seismic Category I components and instruments identified in Tables 2.4.5-2 and 2.4.5-3, including the supports and anchorages, are seismically bounded by the tested or analyzed conditions.

Table 2.4.5-4 (3 of 6)

Design Commitment	Inspections, Tests, Analyses	Acceptance Criteria
5.b The seismic Category I piping, including supports, identified in Table 2.4.5-1 withstands seismic design basis loads without loss of safety function.	5.b.i Inspections will be performed to verify that the as-built seismic Category I piping, including supports, is located in the seismic Category I structure(s).	5.b.i The as-built seismic Category I piping, including supports, identified in Table 2.4.5-1 is located in the seismic Category I structure(s).
	5.b.ii Inspections and analyses of the as-built seismic Category I piping, including supports, will be performed.	5.b.ii A report exists and concludes that the as-built seismic Category I piping, including supports, identified in Table 2.4.5-1 withstands seismic design basis loads without loss of safety function.
6.a The Class 1E components and instruments identified in Tables 2.4.5 2 and 2.4.5-3 as being qualified for a harsh environment (and the associated wiring, cables, and terminations) withstand the environmental conditions that would exist before, during, and following a design basis accident without loss of safety function for the time required to perform the safety function.	6.a.i Type tests or a combination of type tests and analyses will be performed on Class 1E components and instruments located in a harsh environment.	6.a.i A report exists and concludes that the Class 1E components and instruments identified in Tables 2.4.5-2 and 2.4.5-3 as being qualified for a harsh environment withstand the environmental conditions that would exist before, during, and following a design basis accident without loss of safety function for the time required to perform the safety function.
	6.a.ii Inspections will be performed on the as-built Class 1E components and instruments (and the associated wiring, cables, and terminations) located in a harsh environment.	6.a.ii A report exists and concludes that the as-built Class 1E components and instruments identified in Tables 2.4.5-2 and 2.4.5-3 as being qualified for a harsh environment (and the associated wiring, cables, and terminations) are bounded by type tests or a combination of type tests and analyses.

Table 2.4.5-4 (4 of 6)

Design Commitment		Inspections, Tests, Analyses		Acceptance Criteria	
6.b	Each of the Class 1E components and instruments identified in Tables 2.4.5-2 and 2.4.5-3 is powered from its respective Class 1E division.	6.b	Tests will be performed by providing a test signal in only one Class 1E division at a time.	6.b	The test signal exists at the Class 1E components and instruments identified in Tables 2.4.5-2 and 2.4.5-3 as being powered from the Class 1E division under test.
6.c	Physical separation and electrical isolation are provided (1) between Class 1E divisions and (2) between Class 1E divisions and non-Class 1E divisions.	6.c	Inspection of the as-built Class 1E divisions will be performed.	6.c	Physical separation and electrical isolation exist in accordance with NRC RG 1.75 (1) between Class 1E divisions and (2) between Class 1E divisions and non-Class 1E divisions.
7.a	The RCGVS safety-related valves are functionally designed and qualified to perform their safety-related function under the full range of fluid flow, differential pressure, electrical, and temperature conditions up to and including design basis accident conditions.	7.a.i	A type test or a combination of type test and analysis will be performed of the RCGVS safety-related valves.	7.a.i	A Functional Qualification Report performed in conformance to ASME QME-1-2007, as accepted in Regulatory Guide 1.100 Revision 3, exists and concludes that the RCGVS safety-related valves listed in Table 2.4.5-2 are functionally designed and qualified to perform their safety-related function under the full range of fluid flow, differential pressure, electrical, and temperature conditions up to and including design basis accident conditions.

Table 2.4.5-4 (5 of 6)

Design Commitment	Inspections, Tests, Analyses	Acceptance Criteria
7.a (cont.)	7.a.ii A diagnostic stroke test and analysis will be performed of the RCGVS safety-related valves under preoperational temperature, differential pressure, and flow conditions.	7.a.ii Each RCGVS safety-related valve listed in Table 2.4.5-2 strokes fully open and fully closed by remote operation (or manual operation if a manually operated valve) under preoperational temperature, differential pressure, and flow conditions. Analysis based on sufficient diagnostic data demonstrates that the valves will perform at their design-basis capability as established by the type test performed in accordance with 7.a.i.
7.b After loss of motive power, SOVs identified in Table 2.4.5-2 assume the indicated loss of motive power position.	7.b Test of the as-built SOVs will be performed under the conditions of loss of motive power.	7.b Upon loss of motive power, each as-built SOV identified in Table 2.4.5-2 assumes the indicated loss of motive power position.
8.a Controls exist in the MCR to open and close SOVs identified in Table 2.4.5-2	8.a Tests will be performed using the controls in the MCR to open and close SOVs.	8.a Controls in the as-built MCR open and close SOVs identified in Table 2.4.5-2.
8.b Controls exist in the RSR to open and close SOVs identified in Table 2.4.5-2.	8.b Tests will be performed using the controls in the RSR to open and close SOVs.	8.b Controls in the as-built RSR open and close SOVs identified in Table 2.4.5-2.
8.c Displays and alarms exist and are retrievable in the MCR as defined in Tables 2.4.5-2 and 2.4.5-3.	8.c Inspections of the as-built displays and alarms in the MCR will be performed.	8.c Displays and alarms exist and are retrieved in the as-built MCR as defined in Tables 2.4.5-2 and 2.4.5-3.
8.d Displays and alarms exist and are retrievable in the RSR as defined in Tables 2.4.5-2 and 2.4.5-3.	8.d Inspections of the as-built displays and alarms in the RSR will be performed.	8.d Displays and alarms exist and are retrieved in the as-built RSR as defined in Tables 2.4.5-2 and 2.4.5-3.

Table 2.4.5-4 (6 of 6)

Design Commitment	Inspections, Tests, Analyses	Acceptance Criteria
9. The RCGVS non-metallic parts, materials, and lubricants used in safety-related mechanical equipment perform their safety-related function up to the end of their qualified life in the design basis harsh environmental conditions (both internal service conditions and external environmental conditions) experienced during normal operations, anticipated operational occurrences, design-basis accidents, and post accident conditions.	9. A type test or a combination of type test and analysis will be performed of the RCGVS non-metallic parts, materials, and lubricants used in safety-related mechanical equipment.	9. A report exists and concludes that the non-metallic parts, materials, and lubricants used in safety-related mechanical equipment listed in Table 2.4.5-2 perform their safety-related function up to the end of their qualified life under the design basis harsh environmental conditions (both internal service conditions and external environmental conditions) experienced during normal operations, anticipated operational occurrences, design-basis accidents, and post accident conditions

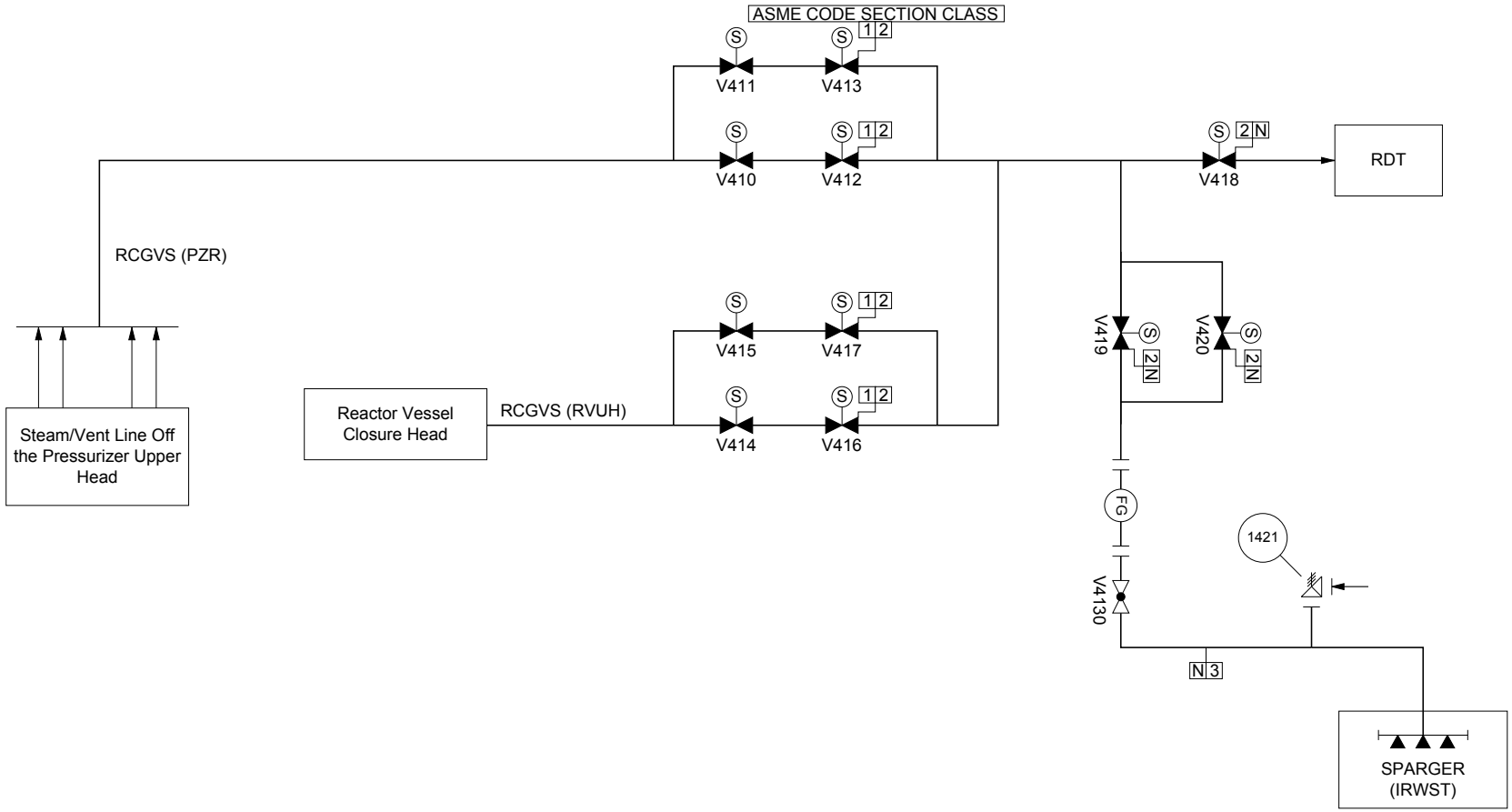

Figure 2.4.5-1 Reactor Coolant Gas Vent System

2.4.6 Chemical and Volume Control System

2.4.6.1 Design Description

The chemical and volume control system (CVCS) controls the purity, volume, and chemistry of the reactor coolant. The portions of the CVCS which accomplish reactor normal makeup and normal reactivity control are classified at least safety Class 3.

The CVCS maintains the required volume of water in reactor coolant system (RCS) in conjunction with the pressurizer level control system. The CVCS also provides backup spray water to the pressurizer and cooling water to the RCP seals.

The CVCS also has the following safety-related functions: maintaining integrity of components (including piping and valves) in the reactor coolant pressure boundary, isolating the CVCS lines passing through the containment penetrations following a postulated DBA, and limiting the magnitude of a boron dilution source to the RCS to prevent inadvertent RCS boron dilution.

Major portion of CVCS is located in the auxiliary building and reactor containment building, except the holdup tank (HT), reactor makeup water tank (RMWT), and boric acid storage tank (BAST) are located in the yard and surrounded by a dike.

The gas stripper is operated as necessary to ensure that dose rate outside the HT remains less than 2.5 μSv/hr.

The gas stripper is operated as necessary to ensure that dose rate outside the HT remains less than the Zone 1 criteria.

1. The functional arrangement of the CVCS is as described in the Design Description of Subsection 2.4.6.1 and in Table 2.4.6-1 and as shown in Figure 2.4.6-1.

2.a The ASME Code components identified in Table 2.4.6-2 are designed and constructed in accordance with ASME Section III requirements.

2.b The ASME Code piping, including supports, identified in Table 2.4.6-1 is designed and constructed in accordance with ASME Section III requirements.

3.a Pressure boundary welds in ASME Code components identified in Table 2.4.6-2 meet ASME Section III requirements.

3.b Pressure boundary welds in ASME Code piping identified in Table 2.4.6-1 meet ASME Section III requirements.

4.a The ASME Code components identified in Table 2.4.6-2 retain their pressure boundary integrity at their design pressure.

4.b The ASME Code piping identified in Table 2.4.6-1 retains its pressure boundary integrity at its design pressure.

5.a The seismic Category I components and instruments identified in Tables 2.4.6-2 and 2.4.6-3, including the supports and anchorages, withstand seismic design basis loads without loss of safety function.

5.b The seismic Category I piping, including supports, identified in Table 2.4.6-1 can withstand seismic design basis loads without loss of safety function.

6.a The Class 1E components and instruments identified in Tables 2.4.6-2 and 2.4.6-3 as being qualified for a harsh environment (and the associated wiring, cables, and terminations) can withstand the environmental conditions that would exist before, during, and following a design basis accident without loss of safety function for the time required to perform the safety function.

6.b Each of the Class 1E components and instruments identified in Tables 2.4.6-2 and 2.4.6-3 is powered from its respective Class 1E division.

6.c Physical separation and electrical isolation are provided (1) between Class 1E divisions and (2) between Class 1E divisions and non-Class 1E divisions.

7.a The CVCS safety-related valves are functionally designed and qualified to perform their safety-related function under the full range of fluid flow, differential pressure, electrical, and temperature conditions up to and including design basis accident conditions.

7.b After loss of motive power, MOVs, AOVs, and SOV identified in Table 2.4.6-2 assume the indicated loss of motive power position.

8.a Controls exist in the MCR to start and stop the charging pumps and auxiliary charging pump, and to open and close the MOVs, AOVs, and SOV identified in Table 2.4.6-2.

8.b Controls exist in the RSR to start and stop the charging pumps and auxiliary charging pump, and to open and close the MOVs, AOVs, and SOV identified in Table 2.4.6-2.

8.c Displays and alarms exist and are retrievable in the MCR as defined in Tables 2.4.6-2 and 2.4.6-3.

8.d Displays and alarms exist and are retrievable in the RSR as defined in Tables 2.4.6-2 and 2.4.6-3.

9.a The CVCS provides makeup capability to maintain the RCS volume.

9.b The CVCS supplies seal water to the RCP seals.

9.c The CVCS provides pressurizer auxiliary spray water for depressurization.

9.d The CVCS limits the magnitude of a boron dilution source to the RCS to prevent inadvertent RCS boron dilution.

9.e. The charging pumps and auxiliary charging pump have net positive suction head (NPSH).

10. The CVCS non-metallic parts, materials, and lubricants used in safety-related mechanical equipment perform their safety-related function up to the end of their qualified life in the design basis harsh environmental conditions (both internal service conditions and external environmental conditions) experienced during normal operations, anticipated operational occurrences, design-basis accidents, and post accident conditions.

11. A pre-holdup ion exchanger is used to limit radionuclide inventories stored in the holdup tank. A 3-to-1 cation to anion ratio provides a minimum cesium DF of 100.

2.4.6.2 Inspections, Tests, Analyses, and Acceptance Criteria

Table 2.4.6-4 specifies the ITAAC for the CVCS.

The ITAAC associated with the CVCS equipment, components, and piping that comprise a portion of the containment isolation system are described in Table 2.11.3-2.

Table 2.4.6-1 (1 of 2)

Chemical and Volume Control System Equipment and Piping Characteristics

Equipment and Piping Name	Location	ASME Section III Class	Seismic Category
Regenerative heat exchanger	Containment	2	I
Letdown heat exchanger	Containment	2	I
Volume control tank	Auxiliary building	3	I
Charging pumps and auxiliary charging pump	Auxiliary building	3	I
Charging pump mini-flow heat exchanger	Auxiliary building	3	I
Letdown piping and valves from RCS to and including valve CV-516 prior to regenerative heat exchanger	Containment	1	I
Letdown piping and valves from and excluding valve CV-516 to and excluding valves CV-522 downstream to letdown heat exchanger	Containment	2	I
All CVCS containment isolation valves(1) and piping between the valves	Containment and Auxiliary building	2	I
Letdown piping and valves from and excluding valve CV-523 to and including valves CV-520, CV-521, CV-413, CV-421, and CV-422 prior to purification ion exchanger	Auxiliary building	3	I
Letdown piping and valves from and including valve CV-415 downstream to letdown strainer to and including volume control tank	Auxiliary building	3	I
RCP seal CBO piping and valves (including CV-507) from 4 RCP's to and excluding valve CV-506	Containment	2	I
RCP seal CBO piping and valves from and excluding valve CV-505 to and excluding volume control tank	Auxiliary building	3	I

Table 2.4.6-1 (2 of 2)

Equipment and Piping Name	Location	ASME Section III Class	Seismic Category
RCP seal injection piping and valves from seal injection tee to and excluding valve CV-255 downstream to seal injection filter	Auxiliary building	3	I
RCP seal injection piping and valves from and excluding valve CV-835 to and excluding valves CV-787/802/807/812	Containment	2	I
RCP seal injection piping and valves from and including valves CV-787/802/807/812 to 4 RCP's	Containment	1	I
Charging piping and valves from and excluding volume control tank to and excluding valve CV-524	Auxiliary building	2/3	I
Charging piping and valves from and excluding valve CV-747 prior to regenerative heat exchanger to and excluding valve CV-240	Containment	2	I
Charging piping and valves from and including valve CV-240 to RCS	Containment	1	I
Auxiliary spray piping and valves from and including valve CV-203 to the penetration into the RCS	Containment	1	I
Boric acid makeup piping and valves from and including boric acid storage tank to and excluding charging pumps/volume control tank	Auxiliary building	3	I

(1) The CVCS containment isolation valves are as follows: CV-189, CV-255, CV-362, CV-363, CV-494, CV-505, CV-506, CV-509, CV-522, CV-523, CV-524, CV-560, CV-561, CV-580, CV-747, and CV-835.

Table 2.4.6-2 (1 of 2)

Chemical and Volume Control System Components List

Component Name	Item No.	ASME Section III Class	Seismic Category	Class 1E/ Harsh Envir. Qual.	Control/ Display at MCR	Control/ Display at RSR	Control Signal	Active Safety Function	Loss of Motive Power Position
Charging Pumps	CP	3	I	Yes/- (1)	Yes/Yes	Yes/Yes	-	-	-
Auxiliary Charging Pump	ACP	3	I	Yes/-	Yes/Yes	Yes/Yes	-	-	-
Reactor Makeup Water Line Isolation	CV-186	3	I	-/-	-/-	-/-	-	Closed	-
IRWST Makeup Line Check Valve	CV-189	2	I	-/-	-/-	-/-	-	Closed	-
Pressurizer Auxiliary Spray Valve (SOV)	CV-203	1	I	Yes/-	Yes/Yes	Yes/Yes	-	-	Closed
Seal Injection Containment Isolation Valve (MOV)	CV-255	2	I	Yes/Yes	Yes/Yes	-/-	-	Closed	As Is
SCS Purification Line Isolation Valve	CV-362	2	I	-/-	Yes/-	-/-	-	Closed	-
SCS Purification Line Check Valve	CV-363	2	I	-/-	-/-	-/-	-	Closed	-
RSSH (2) to Reactor Drain Header Check Valve	CV-494	2	I	-/-	-/-	-/-	-	Closed	-
VCT Discharge Isolation Valves (MOV)	CV-501 CV-504	3 3	I I	Yes/- Yes/-	Yes/Yes Yes/Yes	-/- -/-	- -	- -	As Is As Is
RCP CBO Line Containment Isolation Valves (AOV)	CV-505 CV-506	2 2	I I	Yes/Yes Yes/Yes	Yes/Yes Yes/Yes	Yes/Yes Yes/Yes	CSAS CSAS	Closed Closed	Closed Closed
RCP CBO Relief Isolation Valve (MOV)	CV-507	2	I	Yes/-	Yes/Yes	Yes/Yes	-	-	As Is

Table 2.4.6-2 (2 of 2)

Component Name	Item No.	ASME Section III Class	Seismic Category	Class 1E/ Harsh Envir. Qual.	Control/ Display at MCR	Control/ Display at RSR	Control Signal	Active Safety Function	Loss of Motive Power Position
IRWST Makeup Line Containment Isolation Valve (MOV)	CV-509	2	I	Yes/Yes	Yes/Yes	-/-	CIAS	Closed	As Is
Letdown Isolation Valves (AOV)	CV-515 CV-516	1 1	I I	Yes/Yes Yes/Yes	Yes/Yes Yes/Yes	Yes/Yes Yes/Yes	SIAS SIAS	Closed Closed	Closed Closed
Letdown Containment Isolation Valves (AOV)	CV-522 CV-523	2 2	I I	Yes/Yes Yes/Yes	Yes/Yes Yes/Yes	Yes/Yes Yes/Yes	CIAS CIAS	Closed Closed	Closed Closed
Charging Containment Isolation Valve (MOV)	CV-524	2	I	Yes/Yes	Yes/Yes	-/-	-	Closed	As Is
BAST Gravity Valves (MOV)	CV-534 CV-536	3 3	I I	Yes/- Yes/-	Yes/Yes Yes/Yes	-/- -/-	- -	- -	As Is As Is
Charging Flow Restricting Valves (MOV)	CV-576 CV-577	2 2	I I	Yes/Yes Yes/Yes	Yes/Yes Yes/Yes	Yes/Yes Yes/Yes	- -	Closed Closed	As Is As Is
RDT Effluent Containment Isolation Valves (AOV)	CV-560 CV-561	2 2	I I	Yes/Yes Yes/Yes	Yes/Yes Yes/Yes	-/- -/-	CIAS CIAS	Closed Closed	Closed Closed
RSSH to Reactor Drain Header Isolation Valve (AOV)	CV-580	2	I	Yes/Yes	Yes/Yes	-/-	CIAS	Closed	Closed
Charging Line Check Valve	CV-747	2	I	-/-	-/-	-/-	-	Closed	-
Seal Injection Containment Isolation Check Valve	CV-835	2	I	-/-	-/-	-/-	-	Closed	-

(1) Dash (-) indicates not applicable.
(2) RSSH : Resin Sluice Supply Header (from RMWT).

Table 2.4.6-3

Chemical and Volume Control System Instruments List

Instrument Name	Item No.	ASME Section III Class	Seismic Category	Class 1E/ Harsh Envir. Qual.	Display/ Alarm at MCR	Display/ Alarm at RSR
Reactor Drain Tank Pressure	P-268	- (1)	II	-/-	Yes/Yes	-/-
Reactor Drain Tank Temperature	T-268	-	II	-/-	Yes/Yes	-/-
Reactor Drain Tank Level	L-268	-	II	-/-	Yes/Yes	-/-
Letdown Line Flow	F-202	3	I	-/-	Yes/Yes	Yes/-
Charging Line Flow	F-212B	3	I	Yes/-	Yes/Yes	Yes/-
Volume Control Tank Level	L-226	-	I	-/-	Yes/Yes	-/-
	L-227		I	-/-	Yes/Yes	Yes/-
Boronometer	A-203	-	II	-/-	Yes/Yes	-/-
Process Radiation Monitor	R-204	-	II	-/-	Yes/Yes	-/-
Letdown Line Pressure	P-220	-	II	-/-	Yes/Yes	-/-
Charging Pump Suction Header Pressure	P-211	-	II	-/-	Yes/Yes	-/-

(1) Dash(-) indicates not applicable.

Table 2.4.6-4 (1 of 7)

Chemical and Volume Control System ITAAC

Design Commitment	Inspections, Tests, Analyses	Acceptance Criteria
1. The functional arrangement of the CVCS is as described in the Design Description of Subsection 2.4.6.1 and in Table 2.4.6-1 and as shown in Figure 2.4.6-1.	1. Inspection of the as-built CVCS will be conducted.	1. The as-built CVCS conforms with the functional arrangement as described in the Design Description of Subsection 2.4.6.1 and in Table 2.4.6-1 and as shown in Figure 2.4.6-1.
2.a The ASME Code components identified in Table 2.4.6-2 are designed and constructed in accordance with ASME Section III requirements.	2.a Inspection of the as-built ASME Code components identified in Table 2.4.6-2 will be performed and documented in the ASME data report(s).	2.a The ASME Section III data report(s) exist and conclude that the as-built ASME Code components identified in Table 2.4.6-2 are designed and constructed in accordance with ASME Section III requirements.
2.b The ASME Code piping, including supports, identified in Table 2.4.6-1 is designed and constructed in accordance with ASME Section III requirements.	2.b Inspection of the as-built ASME Code piping, including supports, identified in Table 2.4.6-1 will be performed and documented in the ASME data report(s).	2.b The ASME Section III data report(s) exist and conclude that the as-built ASME Code piping, including supports, identified in Table 2.4.6-1 is designed and constructed in accordance with ASME Section III requirements.
3.a Pressure boundary welds in ASME Code components identified in Table 2.4.6-2 meet ASME Section III requirements.	3.a Inspections of the as-built pressure boundary welds in ASME Code components identified in Table 2.4.6-2 will be performed in accordance with the ASME Section III.	3.a A report exists and concludes that the ASME Section III requirements are met for non-destructive examination of the as-built pressure boundary welds in ASME Code components identified in Table 2.4.6-2.
3.b Pressure boundary welds in ASME Code piping identified in Table 2.4.6-1 meet ASME Section III requirements.	3.b Inspections of the as-built pressure boundary welds in ASME Code piping identified in Table 2.4.6-1 will be performed in accordance with the ASME Section III.	3.b A report exists and concludes that the ASME Section III requirements are met for non-destructive examination of the as-built pressure boundary welds in ASME Code piping identified in Table 2.4.6-1.

Table 2.4.6-4 (2 of 7)

Design Commitment	Inspections, Tests, Analyses	Acceptance Criteria
4.a The ASME Code components identified in Table 2.4.6-2 retain their pressure boundary integrity at their design pressure.	4.a A hydrostatic test will be conducted on the as-built ASME Code components identified in Table 2.4.6-2 required to be hydrostatically tested by the ASME Section III.	4.a A report exists and concludes that the results of the hydrostatic test of the as-built ASME Code components identified in Table 2.4.6-2 conform with ASME Section III requirements.
4.b The ASME Code piping identified in Table 2.4.6-1 retains its pressure boundary integrity at its design pressure.	4.b A hydrostatic test will be conducted on the as-built ASME Code piping identified in Table 2.4.6-1 required to be hydrostatically tested by the ASME Section III.	4.b A report exists and concludes that the results of the hydrostatic test of the as-built ASME Code piping identified in Table 2.4.6-1 conform with ASME Section III requirements.
5.a The seismic Category I components and instruments identified in Tables 2.4.6-2 and 2.4.6-3, including the supports and anchorages, withstand seismic design basis loads without loss of safety function.	5.a.i Inspections will be performed to verify that the as-built seismic Category I components and instruments are located in the seismic Category I structure.	5.a.i The as-built seismic Category I components and instruments identified in Tables 2.4.6-2 and 2.4.6-3 are located in the seismic Category I structure.
	5.a.ii Type tests, analyses or a combination of type tests and analyses of seismic Category I components and instruments will be performed.	5.a.ii A report exists and concludes that the seismic Category I components and instruments identified in Tables 2.4.6-2 and 2.4.6-3 can withstand seismic design basis loads without loss of safety function.
	5.a.iii Inspections will be performed to verify that the as-built seismic Category I components and instruments, including the supports and anchorages, are seismically bounded by the tested or analyzed conditions.	5.a.iii A report exists and concludes that the as-built seismic Category I components and instruments identified in Tables 2.4.6-2 and 2.4.6-3, including the supports and anchorages, are seismically bounded by the tested or analyzed conditions.

Table 2.4.6-4 (3 of 7)

Design Commitment	Inspections, Tests, Analyses	Acceptance Criteria
5.b The seismic Category I piping, including supports, identified in Table 2.4.6-1 can withstand seismic design basis loads without loss of safety function.	5.b.i Inspections will be performed to verify that the as-built seismic Category I piping, including supports, is located in the seismic Category I structure(s).	5.b.i The as-built seismic Category I piping, including supports, identified in Table 2.4.6-1 is located in the seismic Category I structure(s).
	5.b.ii Inspections and analyses of the as-built seismic Category I piping, including supports, will be performed.	5.b.ii A report exists and concludes that the as-built seismic Category I piping, including supports, identified in Table 2.4.6-1 can withstand seismic design basis loads without loss of safety function.
6.a The Class 1E components and instruments identified in Tables 2.4.6-2 and 2.4.6-3 as being qualified for a harsh environment (and the associated wiring, cables, and terminations) can withstand the environmental conditions that would exist before, during, and following a design basis accident without loss of safety function for the time required to perform the safety function.	6.a.i Type tests or a combination of type tests and analyses will be performed on Class 1E components and instruments located in a harsh environment.	6.a.i A report exists and concludes that the Class 1E components and instruments identified in Tables 2.4.6-2 and 2.4.6-3 as being qualified for a harsh environment can withstand the environmental conditions that would exist before, during, and following a design basis accident without loss of safety function for the time required to perform the safety function.
	6.a.ii Inspections will be performed on the as-built Class 1E components and instruments (and the associated wiring, cables, and terminations) located in a harsh environment.	6.a.ii A report exists and concludes that the as-built Class 1E components and instruments identified in Table 2.4.6-2 and 2.4.6-3 as being qualified for a harsh environment (and the associated wiring, cables, and terminations) are bounded by type tests or a combination of type tests and analyses.

Table 2.4.6-4 (4 of 7)

Design Commitment		Inspections, Tests, Analyses		Acceptance Criteria	
6.b	Each of the Class 1E components and instruments identified in Tables 2.4.6-2 and 2.4.6-3 is powered from its respective Class 1E division.	6.b	Tests will be performed by providing a test signal in only one Class 1E division at a time.	6.b	The test signal exists at the Class 1E components and instruments identified in Tables 2.4.6-2 and 2.4.6-3 as being powered from the Class 1E division under test.
6.c	Physical separation and electrical isolation are provided (1) between Class 1E divisions, and (2) between Class 1E divisions and non-Class 1E divisions.	6.c	Inspection of the as-built Class 1E divisions will be performed.	6.c	Physical separation and electrical isolation exist in accordance with NRC RG 1.75 (1) between Class 1E divisions, and (2) between Class 1E divisions and non-Class 1E divisions.
7.a	The CVCS safety-related valves are functionally designed and qualified to perform their safety-related function under the full range of fluid flow, differential pressure, electrical, and temperature conditions up to and including design basis accident conditions.	7.a.i	A type test or a combination of type test and analysis will be performed of the CVCS safety-related valves.	7.a.i	A Functional Qualification Report performed in conformance to ASME QME-1-2007, as accepted in Regulatory Guide 1.100 Revision 3, exists and concludes that the CVCS safety-related valves listed in Table 2.4.6-2 are functionally designed and qualified to perform their safety-related function under the full range of fluid flow, differential pressure, electrical, and temperature conditions up to and including design basis accident conditions.

Table 2.4.6-4 (5 of 7)

Design Commitment	Inspections, Tests, Analyses	Acceptance Criteria
7.a (cont.)	7.a.ii A diagnostic stroke test and analysis will be performed of the CVCS safety-related valves under preoperational temperature, differential pressure, and flow conditions.	7.a.ii Each CVCS safety-related valve listed in Table 2.4.6-2 strokes fully open and fully closed by remote operation (or manual operation if a manually operated valve) under preoperational temperature, differential pressure, and flow conditions. Analysis based on sufficient diagnostic data demonstrates that the valves will perform at their design-basis capability as established by the type test performed in accordance with 7.a.i.
	7.a.iii Tests of the as-built check valves will be performed under pre-operational test pressure, temperature, and fluid flow conditions.	7.a.iii Each as-built check valve changes position as indicated in Table 2.4.6-2 under pre-operational test conditions.
7.b After loss of motive power, MOVs, AOVs, and SOV identified in Table 2.4.6-2 assume the indicated loss of motive power position.	7.b Tests of the as-built MOVs, AOVs, and SOV will be performed under the conditions of loss of motive power.	7.b Upon loss of motive power, each as-built MOVs, AOVs, or SOV identified in Table 2.4.6-2 assumes the indicated loss of motive power position.
8.a Controls exist in the MCR to start and stop the charging pumps and auxiliary charging pump, and to open and close the MOVs, AOVs, and SOV identified in Table 2.4.6-2.	8.a Tests will be performed using the controls in the MCR to start and stop the charging pumps and auxiliary charging pump, and to open and close the MOVs, AOVs, and SOV.	8.a Controls in the as-built MCR start and stop the charging pumps and auxiliary charging pump, and open and close the MOVs, AOVs, and SOV identified in Table 2.4.6-2.

Table 2.4.6-4 (6 of 7)

Design Commitment		Inspections, Tests, Analyses		Acceptance Criteria	
8.b	Controls exist in the RSR to start and stop the charging pumps and auxiliary charging pump, and to open and close the MOVs, AOVs, and SOV identified in Table 2.4.6-2.	8.b	Tests will be performed using the controls in the RSR to start and stop the charging pumps and auxiliary charging pump, and to open and close the MOVs, AOVs, and SOV.	8.b	Controls in the as-built RSR start and stop the charging pumps and ACP, and open and close the MOVs, AOVs, and SOV identified in Table 2.4.6-2.
8.c	Displays and alarms exist and are retrievable in the MCR as defined in Tables 2.4.6-2 and 2.4.6-3.	8.c	Inspections of the as-built displays and alarms in the MCR will be performed.	8.c	Displays and alarms exist and are retrieved in the as-built MCR as defined in Tables 2.4.6-2 and 2.4.6-3.
8.d	Displays and alarms exist and are retrievable in the RSR as defined in Tables 2.4.6-2 and 2.4.6-3.	8.d	Inspection of the as-built displays and alarms in the RSR will be performed.	8.d	Displays and alarms exist and are retrieved in the as-built RSR as defined in Tables 2.4.6-2 and 2.4.6-3.
9.a	The CVCS provides makeup capability to maintain the RCS volume.	9.a	A test of as-built CVCS will be performed to measure the makeup flow rate.	9.a	Each as-built CVCS charging pump delivers a flow rate to the RCS of greater than or equal to 586.7 L/min (155 gpm) at normal operating pressure of RCS.
9.b	The CVCS supplies seal water to the RCP seals.	9.b	A test of as-built CVCS will be performed by aligning a flow path to each RCP.	9.b	Each as-built CVCS charging pump provides a flow rate of greater than or equal to 25.0 L/min (6.6 gpm) to each RCP.
9.c	The CVCS provides pressurizer auxiliary spray water for depressurization.	9.c	A test of the as-built CVCS will be performed by aligning a flow path to the pressurizer auxiliary spray.	9.c	The as-built CVCS charging pump provides spray flow to the pressurizer.

Table 2.4.6-4 (7 of 7)

Design Commitment	Inspections, Tests, Analyses	Acceptance Criteria
9.d The CVCS limits the magnitude of a boron dilution source to the RCS to prevent inadvertent RCS boron dilution.	9.d A test of as-built CVCS will be performed to measure the charging flow rate through the charging restricting orifices .	9.d The as-built charging restricting orifices limit the charging flow rate to less than or equal to the following at atmospheric pressure of RCS : 567.8 L/min (150 gpm) with two charging flow restrictingvalves closed and 681.4 L/min (180 gpm) with one charging flow restricting valve closed.
9.e. The charging pumps and auxiliary charging pump have net positive suction head (NPSH).	9.e. Test to measure the as-built charging pumps and auxiliary charging pump will be performed. Inspection and analysis to determine NPSH available to each pump will be performed.	9.e. A report exists and concludes that the as-built calculated NPSH available exceeds each CVCS pump's NPSH required.
10. The CVCS non-metallic parts, materials, and lubricants used in safety-related mechanical equipment perform their safety-related function up to the end of their qualified life in the design basis harsh environmental conditions (both internal service conditions and external environmental conditions) experienced during normal operations, anticipated operational occurrences, design-basis accidents, and post accident conditions.	10. A type test or a combination of type test and analysis will be performed of the CVCS non-metallic parts, materials, and lubricants used in safety-related mechanical equipment.	10. A report exists and concludes that the non-metallic parts, materials, and lubricants used in safety-related mechanical equipment listed in Table 2.4.6-2 perform their safety-related function up to the end of their qualified life under the design basis harsh environmental conditions (both internal service conditions and external environmental conditions) experienced during normal operations, anticipated operational occurrences, design-basis accidents, and post accident conditions

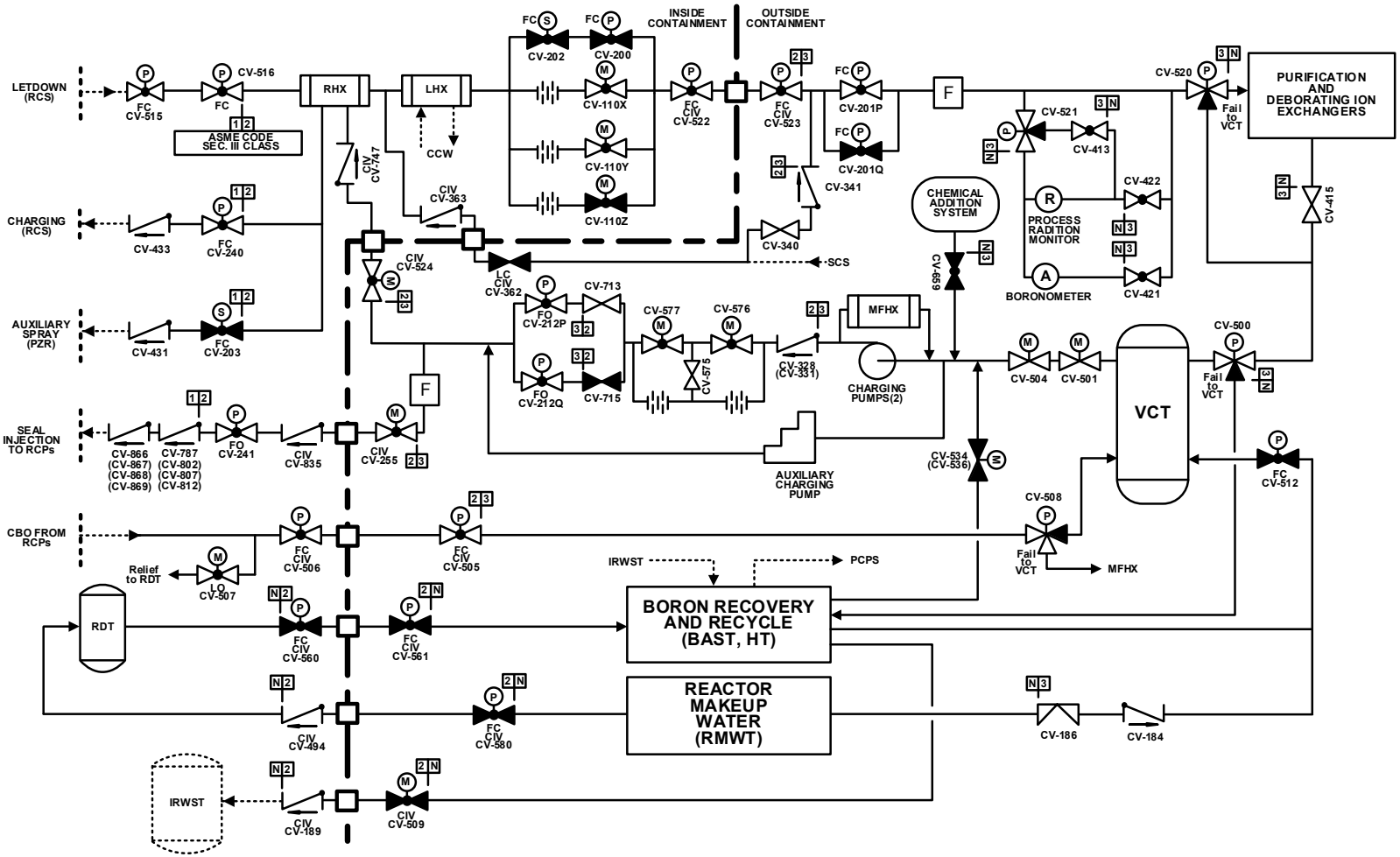

Figure 2.4.6-1 Chemical and Volume Control System

2.4.7 Leakage Detection System

2.4.7.1 Design Description

The leak detection system for reactor coolant pressure boundary (RCPB) provides a means of detecting and, to the extent practical, identifying the source of reactor coolant leakage and monitoring leakage from the reactor coolant system and associated systems.

1. Indications of unidentified coolant leakage into the containment are provided by containment sump level monitors and containment airborne particulate radioactivity monitors, and containment atmosphere humidity monitors listed in Table 2.4.7-2. The instrumentation for leak detection system provides alarms and displays in the MCR indicating reactor coolant pressure boundary leakage.

2. The above listed leak detection system instrumentation is located at the following locations:

   Containment atmosphere humidity sensors: The humidity sensors are installed at the intake of each of the reactor containment fan Coolers (RCFCs).

   Containment airborne particulate radioactivity: The sample line inlet for radiation monitors is located on the operating level between two RCFC air intakes.

   Containment sump level: The level monitors are installed at the ICI cavity sump and the reactor containment building sump.

2.4.7.2 Inspections, Tests, Analyses, and Acceptance Criteria

Table 2.4.7-1 describes the ITAAC for reactor coolant pressure boundary leakage detection system.

Table 2.4.7-1 (1 of 2)

Leakage Detection System ITAAC

Design Commitment	Inspections, Tests, Analyses	Acceptance Criteria
1. Indications of unidentified coolant leakage into the containment are provided by containment sump level monitors and containment airborne particulate radioactivity monitors, and containment atmosphere humidity monitors listed in Table 2.4.7-2. The instrumentation for leak detection system provides alarms and displays in the MCR indicating reactor coolant pressure boundary leakage.	1.a Inspection will be performed on the as-built VDU in the MCR for retrievability of the reactor coolant pressure boundary leakage detection alarms from the as-built containment sump level monitors, the containment airborne particulate radioactivity monitors, and the containment atmosphere humidity monitors.	1.a Alarms from the as-built reactor coolant pressure boundary leakage detection containment sump level monitors, the containment airborne particulate radioactivity monitors, and containment atmosphere humidity monitors can be retrieved on the as-built VDU in the MCR.
	1.b Inspection will be performed on the as-built VDU in the MCR for retrievability of the displays of containment sump level, containment airborne particulate radioactivity, and the containment atmosphere humidity.	1.b Displays of containment sump level, containment airborne particulate radioactivity, and the containment atmosphere humidity can be retrieved on the as-built VDU in the MCR.
	1.c Testing, by adding water to the as-built containment sump, and analysis, will be performed.	1.c A report exists and concludes that the as-built containment sump level monitors have the capability to detect a leakage rate of 1.89 L/min (0.5 gpm) or greater within an hour.
	1.d Tests and analyses of the as-built containment airborne particulate radioactivity monitors will be performed.	1.d A report exists and concludes that the as-built containment airborne particulate radioactivity monitors have the required sensitivity and response time, which corresponds to the capability for detecting a leakage rate of 1.89 L/min (0.5 gpm) or greater within an hour.

Table 2.4.7-1 (2 of 2)

Design Commitment	Inspections, Tests, Analyses	Acceptance Criteria
2. Instrumentation for the leak detection system is located at the following locations: Containment atmosphere humidity sensors: The humidity sensors are installed at the intake of each of the reactor containment fan Coolers (RCFCs) Containment airborne particulate radioactivity : The sample line inlet for radiation monitors is located on the operating level between two RCFC air intakes. Containment sump level : The level monitors are installed at the ICI cavity sump and reactor containment building sump.	2.a Inspection will be performed to verify that the as-built containment atmosphere humidity sensors are installed at the intake of the RCFCs.	2.a The as-built containment atmosphere humidity sensors are installed at the intake of the RCFCs.
	2.b Inspection will be performed to verify that the as-built sample line inlet for radiation monitors is located on the operating level between two RCFC air intakes.	2.b The as-built sample line inlet for radiation monitors is located on the operating level between two RCFC air intakes.
	2.c Inspection will be performed to verify that the as-built level monitors are installed at the ICI cavity sump and reactor containment building sump.	2.c The as-built level monitors are installed at the ICI cavity sump and reactor containment building sump.

Table 2.4.7-2

Leakage Detection System Monitors List

Description	Tag No	Location	Class (1)			Display & Alarm at MCR/RSR
			S	SE	E	
Containment Airborne Particulate	PR-RE-039A	Containment	3	I	A	Yes/Yes
Containment Airborne Particulate	PR-RE-040B	Containment	3	I	B	Yes/Yes
Containment Atmosphere Humidity	VP-ME-3013	Containment	N	II	N	Yes/Yes
Containment Atmosphere Humidity	VP-ME-3014	Containment	N	II	N	Yes/Yes
Containment Atmosphere Humidity	VP-ME-3015	Containment	N	II	N	Yes/Yes
Containment Atmosphere Humidity	VP-ME-3016	Containment	N	II	N	Yes/Yes
Containment Building Sump Level	DE-LE-120	Containment	N	II	N	Yes/Yes
Containment ICI Cavity Sump Level	DE-LE-122	Containment	N	II	N	Yes/Yes

(1) S : Safety Class per ANSI/ANS-51.1; 1=SC-1, 2=SC-2, 3=SC-3, N=NNS
SE : Seismic Category; I, II, III
E : Electrical Class ; A, B, C, D=Class 1E Separation Division, N=Non-Class 1E

2.5 Instrumentation and Control

2.5.1 Reactor Trip System and Engineered Safety Features Initiation

2.5.1.1 Design Description

The reactor trip system (RTS) consists of four channels of sensors, auxiliary process cabinet-safety (APC-S) cabinets, ex-core neutron flux monitoring system (ENFMS) cabinets, and four divisions of core protection calculator system (CPCS) cabinets, the reactor protection system (RPS) portion of plant protection system (PPS) cabinets, and reactor trip switchgear system (RTSS) cabinets.

The engineered safety features (ESF) system consists of four sensors, APC-S cabinets, and four divisions of the engineered safety features actuation system (ESFAS) portion of the PPS cabinets and engineered safety features-component control system (ESF-CCS) cabinets. The ESF initiation is performed in sensors, APC-S cabinets and the ESFAS portion of the PPS cabinets.

The APC-S provides signal conditioning/splitting for the safety field sensor signals and transmits the signals to safety systems (PPS, CPCS, QIAS-P and ESF-CCS) and non-safety systems (NPCS, DPS and DIS).

The CPCS monitors pertinent reactor core conditions and calculates Departure from Nucleate Boiling Ratio (DNBR) and Local Power Density (LPD). If the calculated DNBR goes below the pre-determined trip setpoint, a DNBR trip signal is generated. If the calculated LPD exceeds the pre-determined trip setpoint, an LPD trip is generated. The DNBR and LPD trip signals are sent to the PPS for reactor trip initiation.

The ENFMS provides signal conditioning for the detector signals and transmits the signals to the PPS and CPCS.

The PPS automatically generates signals for reactor trip and ESF initiation whenever the monitored processes exceed predefined limits.

The RTSS opens the reactor trip circuit breaker to shut down the reactor upon receiving the reactor trip initiation signal from the PPS.

The Subsection 2.5.1 describes the RTS and ESF system (generation ESF initiation signal). The ESF-CCS is described in Subsection 2.5.4.

The RTS and ESF initiation equipment is located in the auxiliary building and reactor containment building.

The operator module (OM), the maintenance and test panel (MTP), and the interface and test processor (ITP) which are part of the safety I&C system, provide monitoring and testing for the safety-related plant components and instrumentation.

The RTS and ESF system (generating ESF initiation signal) are designed as follows:

1. The seismic Category I equipment, identified in Table 2.5.1-1 withstands seismic design basis loads without loss of safety function.

2. The Class 1E equipment identified in Table 2.5.1-1 (and the associated wiring, cables, and terminations) withstand lightning strikes, the electrical surge, electromagnetic interference (EMI), radio frequency interference (RFI), and electrostatic discharge (ESD) conditions that would exist before, during, and following a design basis accident without loss of safety function for the time required to perform the safety function.

3.a Class 1E equipment identified in Table 2.5.1-1 is powered from its respective Class 1E train.

3.b Redundant Class 1E divisions listed in Table 2.5.1-1 and associated field equipment are physically separated and electrically independent from each other and physically separated and electrically independent from non-Class 1E equipment. Class 1E qualified isolation devices such as fiber optic modems or interposing relays are applied at interfaces between redundant safety divisions and at interfaces between safety and non-safety systems.

3.c Communication independence is achieved between redundant divisions of the Class 1E equipment listed in Table 2.5.1-1.

3.d Communication independence is achieved between non-safety systems and Class 1E equipment listed in Table 2.5.1-1.

4.a The PPS and CPCS provide an automatic reactor trip (RT) and ESF initiation signals, for each condition listed in Tables 2.5.1-2 and 2.5.1-3, if plant process signals reach predetermined setpoints.

4.b Once RT is initiated (automatically or manually), the reactor trip breakers remain open until completion of the protective action, and do not automatically return to normal after the trip condition is reset.

4.c Manual reactor trip switches are provided in the MCR and the RSR for reactor trip.

5. The OM in the MCR displays the status information for variables listed in Tables 2.5.1-2 and 2.5.1-3.

6. Each local coincidence logic (LCL) receives trip signals from four channels of bistable processors (BPs) and utilizes a 2-out-of-4 coincidence logic to perform RPS and ESF initiation functions identified in Tables 2.5.1-2 and 2.5.1-3.

7.a The PPS provides manual trip bypasses on the MTP switch panel, for RT and ESF initiation identified in Tables 2.5.1-2 and 2.5.1-3, respectively.

7.b The PPS automatically removes the operating bypasses listed in Table 2.5.1-4 when permissive conditions are not met.

7.c The PPS provides indications of the bypassed or inoperable status indication (BISI) on the OM in the MCR for the variables identified in Tables 2.5.1-2 and 2.5.1-3 for RT and ESF initiation.

8. Each PPS division is controlled from either the MCR or the RSR as selected from master transfer switches.

9. The PPS utilizes a 2-out-of-4 coincidence logic when no channels are in trip channel bypass. The resulting logic becomes a 2-out-of-3 coincidence logic whenever a trip channel bypass is present.

10. Accuracy, response time testing, surveillance testing, and maintenance are applied to determine if setpoints for variables of RT and ESF initiation are within acceptable limits.

11. The application software for RT and ESF initiation is implemented according to each lifecycle phase in the software development process: concept phase, requirements phase, design phase, implementation phase, test phase, and installation and checkout phase. The outputs including documentation of each

lifecycle phase in the software development process conform to the requirements of that phase.

12. The cabinets listed in Table 2.5.1-1 have key locks and door open alarms, and are located in a vital area of the facility.

13. The RT logic of the PPS is designed to fail to a safe state such that a processor lock-up or loss of electrical power to a division of PPS results in a trip condition by the hardware-based window watchdog timer (from the NRC-approved safety I&C platform) located in the processor module for that division. The ESFAS logic of the PPS is designed to fail to a safe state such that loss of electrical power to a division of PPS does not result in ESF initiation for that division.

14. Redundant safety equipment listed in Table 2.5.1-1 and related field equipment are provided with means of identification.

15. The input signals of PPS through APC-S or ENFMS are derived from RT and ESF initiation measurement instrumentation that measures monitored variables identified in Tables 2.5.1-2 and 2.5.1-3.

16. The PPS provides RT and ESF initiation signals to meet the required response time for trip and initiation conditions identified in Tables 2.5.1-2 and 2.5.1-3.

17. The Class 1E equipment listed in Table 2.5.1-1 is protected from accident related hazards considered in the transient and accident analyses.

18. The RTS and ESF system instrumentation (referenced in Tables 2.5.1-2 and 2.5.1-3) monitors the normal operating, anticipated operational occurrence (AOO), and postulated accident (PA) events.

19. The Class 1E instrument identified in Table 2.5.1-1 as being qualified for a harsh environment (and the associated wiring, cables, and terminations) can withstand the environmental conditions that would exist before, during, and following a design basis accident without loss of safety function for the time required to perform the safety function.

20. The PPS providing RT and ESF initiation signals has the testing function that can be initiated from the PPS MTP. This testing function verifies the functionality of the bistable processing logic and coincidence processing logic within the PPS.

21. A single channel of RTS and ESF system is bypassed to allow testing, maintenance or repair and this capability does not prevent the RTS and ESF system from performing its safety function.

22. Input sensors from each channel of the RTS and ESF system as identified in Tables 2.5.1-2 and 2.5.1-3 are compared continuously in the information processing system (IPS) to allow detection of out-of-tolerance sensors.

23. Two sets of RTSS which consists of four RTSGs are diverse each other.

24. The PPS and CPCS are installed in accordance with the dedicated process of commercial grade hardware and software.

25. The RTS is provided with the minimum number and locations of sensors for the variables that have a spatial dependence as identified and noted in Table 2.5.1-2.

26. Hardwired disconnections exist between the PPS, CPCS cabinets, and the portable workstation used to download the PPS, CPCS software. The hardwired disconnections protect the PPS, CPCS software from unintended modifications.

27. The CPCS configuration restrictions and tests for the CPU load have been implemented.

28. In order for the APR1400 Core Protection Calculator System application to run greater than 70% processor load but less than 75% processor load, the following configuration restrictions are applied:

    1) No sequence of events modules or calculated events shall be used.

    2) No CPU redundancy shall be used.

    3) Only one CI631 module in slot 2 shall be used.

    4) No more than four PM646A modules shall be used in an AC160 station.

    5) No basic objects shall be used.

6) No serial protocols directly from the PM646A shall be used.

7) The CI532 and SC610 modules shall not be used.

8) The SEQ/STEP functions shall not be used.

9) No usage of scheduling strategy 252 or 255 shall be used for the PCPGM and CONTRM function blocks.

10) Boolean MDAT database elements shall not be used.

11) The CI631 shall not be configured as time synchronization master.

12) The online function of the Function Chart Builder shall not be used while the Core Protection Calculator System Channel is in service.

13) No CONTRM or PCPGM cycle times shall be less than 10 milliseconds.

14) The I/O port on the PM646A shall not be used.

15) Remote login to the PM646A using the AF100 shall not be used.

2.5.1.2 Inspections, Tests, Analyses, and Acceptance Criteria

Table 2.5.1-5 specifies the inspections, tests, analyses, and associated acceptance criteria for the RTS and ESF system.

Table 2.5.1-1

Reactor Trip System and Engineered Safety Features Initiation Equipment Location and Classification

Equipment Name	Location	Seismic Category	Class 1E/Harsh Envir. Qual.
PPS Cabinets, Division A/B/C/D	Divisionalized I&C Equipment Room in the Auxiliary Building	I	Yes/No
OMs, Division A/B/C/D	Main Control Room in the Auxiliary Building	I	Yes/No
RTSS Cabinets, Division A/B/C/D	Divisionalized I&C Equipment Room in the Auxiliary Building	I	Yes/No
CPCS Cabinets, A/B/C/D	Divisionalized I&C Equipment Room in the Auxiliary Building	I	Yes/No
ENFMS Cabinets, Channel A/B/C/D	Divisionalized I&C Equipment Room in the Auxiliary Building	I	Yes/No
APC-S Cabinets, Channel A/B/C/D	Divisionalized I&C Equipment Room in the Auxiliary Building	I	Yes/No
MCR Manual Reactor Trip Switch, Division A/B/C/D	Main Control Room in the Auxiliary Building	I	Yes/No
RSR Manual Reactor Trip Switch, Division A/B	Remote Control Room in the Auxiliary Building	I	Yes/No
Ex-core Neutron Detectors, Channel A/B/C/D	Reactor Containment Building	I	Yes/Yes
MTP, Division A/B/C/D	Divisionalized I&C Equipment Room in the Auxiliary Building	I	Yes/No
ITP, Division A/B/C/D	Divisionalized I&C Equipment Room in the Auxiliary Building	I	Yes/No

Table 2.5.1-2

Reactor Trip System Variables

Trip Condition	Process Variable Input	Response Time Requirement
Variable Overpower	Ex-core Neutron Flux	Yes
High Logarithmic Power Level	Ex-core Neutron Flux	Yes
High Local Power Density (from CPCS)	Ex-core Neutron Detectors CEA subgroup position (2)	Yes Yes
Low Departure from Nucleate Boiling Ratio (from CPCS)	Ex-core Neutron Detectors Cold leg temperature (1) Hot leg temperature (1)(3) Pressurizer Pressure (1) RCP speed (1) CEA subgroup position (2)	Yes Yes Yes Yes Yes Yes
High Pressurizer Pressure	PZR Pressure (NR) (1)	Yes
Low Pressurizer Pressure	PZR Pressure (WR) (1)	Yes
High Steam Generator 1 Level	SG Level (NR) (1)	Yes
High Steam Generator 2 Level	SG Level (NR) (1)	Yes
Low Steam Generator 1 Level	SG Level (WR) (1)	Yes
Low Steam Generator 2 Level	SG Level (WR) (1)	Yes
Low Steam Generator 1 Pressure	SG Pressure (1)	Yes
Low Steam Generator 2 Pressure	SG Pressure (1)	Yes
High Containment Pressure	Containment Pressure (NR)	Yes
Low Reactor Coolant Flow 1	SG Differential Pressure (1)	Yes
Low Reactor Coolant Flow 2	SG Differential Pressure (1)	Yes

(1) Instruments as listed in Table 2.4.1-3
(2) Instruments (Reed Switch Position Transmitter) as listed in Table 2.4.1-2
(3) Variable with a spatial dependence.

Table 2.5.1-3

Engineered Safety Features Initiation Variables

Initiation Condition	Process Variable Input	Response Time Requirement
Safety Injection Actuation Signal		
Low Pressurizer Pressure	PZR Pressure (WR) (1)	Yes
High Containment Pressure	Containment Pressure (NR)	Yes
Containment Isolation Actuation Signal		
High Containment Pressure	Containment Pressure (NR)	Yes
Low Pressurizer Pressure	PZR Pressure (WR) (1)	Yes
Containment Spray Actuation Signal		
High-High Containment Pressure	Containment Pressure (WR) (2)	Yes
Main Steam Isolation Signal		
Low Steam Generator Pressure	SG Pressure (1)	Yes
High Containment Pressure	Containment Pressure (NR)	Yes
High Steam Generator Level	SG Level (NR) (1)	Yes
Auxiliary Feedwater Actuation Signal-1		
Low Steam Generator 1 Level	SG 1 Level (WR) (1)	Yes
Auxiliary Feedwater Actuation Signal-2		
Low Steam Generator 2 Level	SG 2 Level (WR) (1)	Yes

(1) Instruments as listed in Table 2.4.1-3
(2) Instruments as listed in Table 2.11.2-3

Table 2.5.1-4

Reactor Trip System and Engineered Safety Features Initiation Bypasses

Bypass	Indication (MCR / RSR)
Low Pressurizer Pressure Trip Operating Bypass(1)	Yes/Yes
High Logarithmic Power Trip Operating Bypass	Yes/Yes
DNBR Trip and LPD Trip Operating Bypass	Yes/Yes
Trip Channel Bypass	Yes/Yes

(1) CIAS/SIAS actuation is disabled by the operating bypass for the Low Pressurizer Pressure trip parameter

Table 2.5.1-5 (1 of 14)

Reactor Trip System and Engineered Safety Features Initiation ITAAC

Design Commitment	Inspections, Tests, Analyses	Acceptance Criteria
1. The seismic Category I equipment, identified in Table 2.5. 1-1 withstands seismic design basis loads without loss of safety function.	1.a Inspections will be performed to verify that the as-built seismic Category I equipment identified in Table 2.5.1-1 is located in a seismic Category I structure.	1.a The as-built seismic Category I equipment identified in Table 2.5.1-1 is located in a seismic Category I structure.
	1.b Type tests, analyses, or a combination of type tests and analyses of seismic Category I equipment identified in Table 2.5.1-1 will be performed.	1.b A report exists and concludes that the seismic Category I equipment identified in Table 2.5.1-1 can withstand seismic design basis loads without loss of safety function.
	1.c Inspections and analyses will be performed to verify the as-built seismic Category I equipment identified in Table 2.5.1-1, including the supports and anchorages, is seismically bounded by the tested or analyzed conditions.	1.c A report exists and concludes that the as-built seismic Category I equipment identified in Table 2.5.1-1, including the supports and anchorages, is seismically bounded by the tested or analyzed conditions.
2. The Class 1E equipment identified in Table 2.5.1-1 (and the associated wiring, cables, and terminations) withstand lightning strikes, the electrical surge, electromagnetic interference (EMI), radio frequency interference (RFI), and electrostatic discharge (ESD) conditions that would exist before, during, and following a design basis accident without loss of safety function for the time required to perform the safety function.	2.a Type tests, analyses, or a combination of type tests and analyses will be performed on Class 1E equipment.	2.a A report exists and concludes that the Class 1E equipment identified in Table 2.5.1-1 can withstand lightning strikes, the electrical surge, EMI, RFI, and ESD conditions that would exist before, during, and following a design basis accident without loss of its safety function, for the time required to perform the safety function.

Table 2.5.1-5 (2 of 14)

Design Commitment	Inspections, Tests, Analyses	Acceptance Criteria
2. (cont.)	2.b Inspection and analysis will be performed on the as-built Class 1E equipment identified in Table 2.5.1-1 (and the associated wiring, cables, and terminations).	2.b The as-built Class 1E equipment identified in Table 2.5.1-1 (and the associated wiring, cables, and terminations) are bounded by type tests or a combination of type tests and analyses.
3.a Class 1E equipment identified in Table 2.5.1-1 is powered from its respective Class 1E division.	3.a Tests of the as-built Class 1E equipment will be performed using a simulated test signal.	3.a The Class 1E equipment identified in Table 2.5.1-1 is powered from its respective Class 1E division .
3.b Redundant Class 1E divisions listed in Table 2.5.1-1 and associated field equipment are physically separated and electrically independent from each other and physically separated and electrically independent from non-Class 1E equipment. Class 1E qualified isolation devices such as fiber optic modems or interposing relays are applied at interfaces between redundant safety divisions and at interfaces between safety and non-safety systems.	3.b.i Inspection for separation of the as-built redundant Class 1E divisions listed in Table 2.5.1-1 and associated field equipment and between safety and non-safety systems will be performed.	3.b.i The physical separation of as-built redundant Class 1E divisions identified in Table 2.5.1-1 and associated field equipment and between safety and non-safety systems is provided by distance or barriers in accordance with NRC RG 1.75.
	3.b.ii Inspection for Class 1E qualified isolation devices will be performed at interfaces between redundant safety divisions and at interfaces between safety and non-safety systems.	3.b.ii Electrical isolation devices are installed to prevent propagation of faults between redundant safety divisions and interfaces between safety and non-safety systems.

Table 2.5.1-5 (3 of 14)

Design Commitment	Inspections, Tests, Analyses	Acceptance Criteria
3.b (cont.)	3.b.iii Analyses, tests or a combination of analyses and tests of the as-built redundant Class 1E divisions listed in Table 2.5.1-1and associated field equipment and between safety and non-safety systems will be performed to verify its electrical independence.	3.b.iii A report exists and concludes that independence of as-built redundant Class 1E divisions listed in Table 2.5.1-1 and associated field equipment is achieved by independent power sources and electrical circuits for each division, and by fiber optic cable interfaces, Class 1E qualified isolation devices at interfaces between redundant divisions, and at interfaces between safety and non-safety systems.
	3.b.iv Testing, analysis or combination of testing and analysis will be performed for the electrical isolation devices.	3.b.iv A report exists and concludes that the Class 1E qualified electrical isolation devices prevent credible faults from propagating into a safety system division.

Table 2.5.1-5 (4 of 14)

Design Commitment	Inspections, Tests, Analyses	Acceptance Criteria
3.c Communication independence is achieved between redundant divisions of the Class 1E equipment listed in Table 2.5.1-1.	3.c Analyses, tests or a combination of analyses and tests of the as-built Class 1E equipment listed in Table 2.5.1-1 will be performed to verify its communication independence between redundant divisions of the Class 1E equipment listed in Table 2.5.1-1.	3.c A report exists and concludes that communication independence between redundant divisions of the Class 1E equipment listed in Table 2.5.1-1 is provided by verifying that: - The communication process is performed by a communication processor (CP) separate from the function processor (FP) that executes the RPS and ESFAS function. - Separate send and receive data channels are used for communication. - The FP and CP interface only by way of the dual-ported random access memory. - The FP operates in a strictly cyclic manner. - The CP transmits signals to serial data link in a deterministic transmit cycle, receives only defined messages, and stores them in a predefined shared-memory. - The FP and CP detect errors through self-diagnostic function.

Table 2.5.1-5 (5 of 14)

Design Commitment	Inspections, Tests, Analyses	Acceptance Criteria
3.d Communication independence is achieved between non-safety systems and Class 1E equipment listed in Table 2.5.1-1.	3.d Analyses, tests or a combination of analyses and tests of the as-built Class 1E equipment listed in Table 2.5.1-1 will be performed to verify its communication independence between non-safety systems and Class 1E equipment listed in Table 2.5.1-1.	3.d A report exists and concludes that communication independence between non-safety systems and Class 1E equipment listed in Table 2.5.1-1 is provided by verifying that: - The data flow from the MTP to the IPS and from the ITP to the QIAS-N is unidirectional via fiber optic cable. - The MTP and the ITP do not receive any data from the IPS and the QIAS-N (no receiving connection). - The MTP has separate communication modules for communication processing to provide a buffering circuit between the PPS and the IPS. - The communication process between the ITP and the QIAS-N is performed by the communication processor (CP) in the ITP.
4.a The PPS and CPCS provide an automatic reactor trip (RT) and ESF initiation signals, for each condition listed in Tables 2.5.1-2 and 2.5.1-3, if plant process signals reach predetermined setpoints.	4.a A test of the as-built PPS and CPCS will be performed using simulated test signals.	4.a Each as-built RTSS opens upon receipt of the automatic reactor trip signal for each condition listed in Table 2.5.1-2 from respective division of the as-built PPS and CPCS, and as-built ESF initiation signals are sent to ESF-CCS upon receipt of the automatic ESF initiation signal for each condition listed in Table 2.5.1-3.

Table 2.5.1-5 (6 of 14)

Design Commitment		Inspections, Tests, Analyses		Acceptance Criteria	
4.b	Once reactor trip is initiated (automatically or manually), the reactor trip breakers remain open until completion of the protective action, and do not automatically return to normal after the trip condition is reset.	4.b.	A test of the as-built RT system will be performed by returning simulated signals to a level within the predetermined limits of plant process signals at the as-built PPS input for RT functions as identified in Tables 2.5.1-2 after the as-built reactor trip breakers are opened.	4.b.	As-built reactor trip breakers remain open upon receipt of simulated signals returned to a level within the predetermined limits of plant process signals for RT functions as identified in Table 2.5.1-2 after the as-built reactor trip breakers are opened.
4.c	Manual reactor trip switches are provided in the MCR and the RSR for reactor trip.	4.c	A test will be performed to verify the actuation of the as-built RTSS using the as-built manual initiation switches in the MCR and RSR.	4.c	Each as-built RTSS opens upon receipt of the corresponding as-built manual reactor trip signal in the MCR and RSR.
5.	The OM in the MCR displays the status information for the variables listed in Tables 2.5.1-2 and 2.5.1-3.	5.	A test of the as-built OM in the MCR will be performed to demonstrate the display capability.	5.	The as-built OM in the MCR have ability to display variables listed in Tables 2.5.1-2 and 2.5.1-3.
6.	Each local coincidence logic (LCL) receives trip signals from four channels of bistable processors (BPs) and utilizes 2-out-of-4 coincidence logic to perform RPS and ESF initiation functions identified in Tables 2.5.1-2 and 2.5.1-3.	6.	A test will be performed using simulated input signals for RPS and ESFAS process inputs to each channel of the BPs.	6.	Each division of LCL receives RPS and ESFAS trip signals from four channels of BP, performs 2-out-of-4 coincidence logic for each RPS and NSSS ESF initiation function identified in Tables 2.5.1-2 and 2.5.1-3 and sends the RPS initiation signals to the RTSS and ESFAS initiation signals to the ESF-CCS.
7.a	The PPS provides manual trip bypasses on the MTP switch panel, for RT and ESF initiation identified in Tables 2.5.1-2 and 2.5.1-3 respectively.	7.a	A test of the as-built PPS system will be performed on the MTP switch panel by initiating manual bypass for RT and the ESF initiation as identified in Tables 2.5.1-2 and 2.5.1-3.	7.a	Trip signals are manually bypassed on the MTP switch panel as identified in Tables 2.5.1-2 and 2.5.1-3 for RT and ESF initiation.

Table 2.5.1-5 (7 of 14)

Design Commitment		Inspections, Tests, Analyses		Acceptance Criteria	
7.b	The PPS automatically removes the operating bypasses listed in Table 2.5.1-4 when permissive conditions are not met.	7.b	A test of the as-built PPS operating bypasses listed in Table 2.5.1-4 will be performed.	7.b	The as-built PPS operating bypasses listed in Table 2.5.1-4 are accepted only when the variables are within operating bypass permissive range. When a variable exceeds the permissive setpoint, the operating bypass is automatically removed.
7.c	The PPS provides indications of the bypassed or inoperable status indication (BISI) on the OM in the MCR for the variables identified in Tables 2.5.1-2 and 2.5.1-3 for RT and ESF initiation.	7.c	A test of the as-built PPS system will be performed on the as-built OM in the MCR by initiating manual bypass for variables identified in Tables 2.5.1-2 and 2.5.1-3 for RT and the ESF initiation.	7.c	The as-built OM provides indications of the bypassed or inoperable status indication (BISI) for the variables identified in Tables 2.5.1-2 and 2.5.1-3 for RT and ESF initiation.
8.	Each PPS division is controlled from either the MCR or the RSR as selected from master transfer switches.	8.	A test of the as-built PPS will be performed to demonstrate the transfer and control function between the MCR and the RSR.	8.	The as-built master transfer switches transfer controls between the MCR and the RSR separately for each as-built PPS division, as follows: - Controls at the RSR are disabled when controls are active in the MCR and the MCR controls the PPS division. - Controls at the MCR are disabled when controls are active in the RSR and the RSR controls the PPS division.
9.	The PPS utilizes a 2-out-of-4 coincidence logic when no channels are in trip channel bypass. The resulting logic becomes a 2-out-of-3 coincidence logic whenever a trip channel bypass is present.	9.	A test will be performed using simulated input signals for RPS and ESFAS process inputs to each channel of the BPs.	9.	When a trip channel bypass is present, the PPS performs a coincidence signal utilizing 2-out-of-3 logic.

Table 2.5.1-5 (8 of 14)

Design Commitment	Inspections, Tests, Analyses	Acceptance Criteria
10. Accuracy, response time testing, surveillance testing, and maintenance are applied to determine if setpoints for variables of RT and ESF initiation are within acceptable limits.	10. Inspection will be performed for the setpoint calculations for RT and ESF initiation listed in Tables 2.5.1-2 and 2.5.1-3 respectively.	10. A report exists and concludes that the setpoints for RT and ESF actuations listed in Tables 2.5.1-2 and 2.5.1-3 respectively account for accuracy, response time testing, surveillance testing, and maintenance.
11. The application software for RT and ESF initiation is implemented according to each lifecycle phase in the software development process: concept phase, requirements phase, design phase, implementation phase, test phase, and installation and checkout phase. The outputs including documentation of each lifecycle phase in the software development process conform to the requirements of that phase.	11.a An inspection and analysis of the outputs including documentations of the concept phase will be performed.	11.a The concept phase outputs including documentations exist and conclude that the concept phase activities are performed and these activities conform to the requirements of the concept phase.
	11.b An inspection and analysis of the outputs including documentations of the requirements phase will be performed.	11.b The requirements phase outputs including documentations exists and concludes that the requirements phase activities are performed and these activities conform to the requirements of the requirements phase.
	11.c An inspection and analysis of the outputs including documentations of the design phase will be performed.	11.c The design phase outputs including documentations exist and concludes that the design phase activities are performed and these activities conform to the requirements of the design phase.
	11.d An inspection and analysis of the outputs including documentations of the implementation phase will be performed.	11.d The implementation phase outputs including documentations exist and concludes that the implementation phase activities are performed and these activities conform to the requirements of the implementation phase.

Table 2.5.1-5 (9 of 14)

Design Commitment	Inspections, Tests, Analyses	Acceptance Criteria
11. (cont.)	11.e An inspection and analysis of the outputs including documentation of the test phase will be performed.	11.e The test phase outputs including documentation exist and conclude that the test phase activities are performed and these activities conform to the requirements of the test phase.
	11.f An inspection and analysis of the outputs including documentation of the installation and checkout phase will be performed.	11.f The installation and checkout phase outputs including documentation exist and conclude that the installation and checkout phase activities and performed and these activities conform to the requirements of the installation and checkout phase.
12. The cabinets listed in Table 2.5.1-1 have key locks and door open alarms, and are located in a vital area of the facility.	12.a A test of the as-built cabinets listed in Table 2.5.1-1 for key lock capability, and a test of door open alarms, will be performed.	12.a Each as-built cabinet listed in Table 2.5.1-1 has key locking capability, and alarms are received in the as-built MCR when cabinet doors are opened.
	12.b Inspection of the cabinets listed in Table 2.5.1-1 will be performed.	12.b The cabinets listed in Table 2.5.1-1 are located in a vital area of the facility.

Table 2.5.1-5 (10 of 14)

Design Commitment	Inspections, Tests, Analyses	Acceptance Criteria
13. The RT logic of the PPS is designed to fail to a safe state such that a processor lock-up or loss of electrical power to a division of PPS results in a trip condition by the hardware-based window watchdog timer (from the NRC-approved safety I&C platform) located in the processor module for that division. The ESFAS logic of the PPS is designed to fail to a safe state such that loss of electrical power to a division of PPS does not result in ESF initiation for that division.	13. Two separate tests will be performed. The first test simulates the processor lock up. The second test disconnects the electrical power to each division of the as built PPS.	13. Each division of the as-built RT logic of the as-built PPS fails to a safe state by operation of the hardware-based window watchdog timer (from the NRC-approved safety I&C platform) located in the processor module upon a processor lock-up or loss of electrical power to the division. Each division of the as-built ESFAS logic of the as-built PPS fails to a safe state upon loss of electrical power to the divison such that the ESF does not initiate for that division.
14. Redundant safety equipment listed in Table 2.5.1-1 and related field equipment are provided with means of identification.	14. An inspection of the as-built redundant safety equipment listed in Table 2.5.1-1 and related field equipment for conformance with the identification requirements in IEEE Std 603-1991, Clause 5.11 will be performed.	14. The as-built redundant safety equipment listed in Table 2.5.1-1 and related field equipment comply with identification requirements in IEEE Std 603-1991, Clause 5.11.
15. The input signals of PPS through APC-S or ENFMS are derived from RT and ESF measurement instrumentation that measures monitored variables identified in Tables 2.5.1-2 and 2.5.1-3.	15. Tests will be performed to verify the electrical continuity between the as-built PPS and the as-built RT and ESF measurement instrumentation that measures monitored variables identified in Tables 2.5.1-2 and 2.5.1-3.	15. The input signals of PPS through APC-S and ENFMS are derived from RT and ESF measurement instrumentation that measures monitored variables identified in Tables 2.5.1-2 and 2.5.1-3.

Table 2.5.1-5 (11 of 14)

Design Commitment	Inspections, Tests, Analyses	Acceptance Criteria
16. The PPS provides RT and ESF initiation signals to meet the required response time for trip and initiation conditions identified in Tables 2.5.1-2 and 2.5.1-3.	16.a Type tests and analyses will be performed on PPS to verify that the PPS initiates RT and the ESF initiation signals identified in Tables 2.5.1-2 and 2.5.1-3 within response time requirements (including the communication delays from the BP to the LCL) described in the design basis.	16.a A report exists and concludes that the PPS initiates the RT and the ESF initiation signals identified in Tables 2.5.1-2 and 2.5.1-3 within the response time requirements (including the communication delays from the BP to the LCL) as described in the design basis.
	16.b Tests will be performed on the as-built RT and ESF initiation signals identified as monitored variables in Tables 2.5.1-2 and 2.5.1-3 with response time requirements.	16.b The as-built RT and ESF initiation signals identified as monitored variables in Tables 2.5.1-2 and 2.5.1-3 with response time requirements are bounded by the tests.
17. The Class 1E equipment listed in Table 2.5.1-1 is protected from accident related hazards considered in the transient and accident analyses.	17. Inspections and analyses will be performed on the locations of the as-built Class 1E equipment listed in Table 2.5.1-1.	17. A report exists and concludes that the as-built equipment listed in Table 2.5.1-1 is protected from accident related hazards considered in the transient and accident analyses.
18. The RTS and ESF system instrumentation (referenced in Tables 2.5.1-2 and 2.5.1-3) monitors the normal operating, anticipated operational occurrence (AOO), and postulated accident (PA) events.	18. An inspection and test of the as-built RTS and ESF system instrumentation will be performed.	18. The as-built RTS and ESF system instrumentation (referenced in Tables 2.5.1-2 and 2.5.1-3) functions during normal operation, AOO, and PA conditions.

Table 2.5.1-5 (12 of 14)

Design Commitment	Inspections, Tests, Analyses	Acceptance Criteria
19. The Class 1E instruments identified in Table 2.5.1-1 as being qualified for a harsh environment (and the associated wiring, cables, and terminations) can withstand the environmental conditions that would exist before, during, and following a design basis accident without loss of safety function for the time required to perform the safety function.	19.a Type tests or a combination of type tests and analyses will be performed on Class 1E instruments located in a harsh environment.	19.a A report exists and concludes that the Class 1E instrument identified in Table 2.5.1-1 as being qualified for a harsh environment can withstand the environmental conditions that would exist before, during, and following a design basis accident without loss of safety function for the time required to perform the safety function.
	19.b Inspections will be performed on the as-built Class 1E instruments identified in Table 2.5.1-1 (and the associated wiring, cables, and terminations) located in a harsh environment.	19.b A report exists and concludes that the as-built Class 1E instruments identified in Table 2.5.1-1 as being qualified for a harsh environment (and the associated wiring, cables, and terminations) are bounded by type tests, or a combination of type tests and analyses.
20. The PPS providing RT and ESF initiation signals has the testing function that can be initiated from the PPS MTP. This testing function verifies the functionality of the bistable processing logic and coincidence processing logic within the PPS.	20. Type tests and analyses of the PPS providing RT and ESF initiation signals will be performed using simulated failure conditions.	20. A report exists and concludes that the PPS providing RT and ESF initiation signals has the testing function that can be initiated from the PPS MTP. This testing function verifies the functionality of the bistable processing logic and coincidence processing logic within the PPS.

Table 2.5.1-5 (13 of 14)

Design Commitment	Inspections, Tests, Analyses	Acceptance Criteria
21. A single channel of RTS and ESF system is bypassed to allow testing, maintenance or repair and this capability does not prevent the RTS and ESF system from performing its safety function.	21. A test will be performed on the 2-out-of-4 voting logic in the as-built RTS and ESF system by providing simulated process signals, identified in Tables 2.5.1-2 and 2.5.1-3, to at least two of three non-bypassed channels of the as-built RTS and ESF system input under the manual single division bypass operation from the as-built the maintenance and test panel (MTP) in the MCR.	21. When the 2-out-of-4 voting logic in the non-bypassed divisions of each as-built RTS and ESF system receives at least two of three actuation signals, identified in Tables 2.5.1-2 and Table 2.5.1-3, from the respective non-bypassed channels, the 2-out-of-4 voting logic in the non-bypassed divisions of each as-built RTS and ESF system provides the actuation signal for the reactor trip and automatic ESF functions identified in the tables.
22. Input sensors from each channel of the RTS and ESF system as identified in Tables 2.5.1-2 and 2.5.1-3 are compared continuously in the information processing system (IPS) to allow detection of out-of-tolerance sensors.	22. A test of the as-built IPS will be performed by providing The simulated inputs for each monitored variable identified in Tables 2.5.1-2 and 2.5.1-3 which includes one out-of-tolerance , at the as-built RTS and ESF system input.	22. An alarm for the out-of-tolerance sensor detection is displayed on the as-built IPS in the MCR when the IPS receives simulated input signals for each monitored variable identified in Tables 2.5.1-2 and 2.5.1-3 which includes one out-of-tolerance signal.
23. Two sets of RTSS which consists of four RTSGs are diverse each other.	23. Inspection of the as-built RTSS equipment will be performed.	23. Two sets of the as-built RTSS which consists of four RTSGs are diverse each other.: One set of RTSGs is supplied from a different manufacturer than the other set of RTSGs.
24. The PPS and CPCS are installed in accordance with the dedicated process of commercial grade hardware and software.	24. An inspection will be performed for installation of the hardware and software.	24. A report exists and concludes that the systems are installed in accordance with the dedicated process of commercial grade hardware and software.

Table 2.5.1-5 (14 of 14)

Design Commitment	Inspections, Tests, Analyses	Acceptance Criteria
25. The RTS is provided with the minimum number and locations of sensors for the variables that have a spatial dependence as identified and noted in Table 2.5.1-2.	25. An inspection will be performed on the as-built equipment for the variables that have a spatial dependence as identified and noted in Table 2.5.1-2.	25. The as-built equipment for the variables that have a spatial dependence as identified and noted in Table 2.5.1-2 is installed in accordance with the minimum number and locations of sensors.
26. Hardwired disconnections exist between the PPS, CPCS cabinets, and the portable workstation used to download the PPS, CPCS software. The hardwired disconnections protect the system software from unintended modifications.	26.a An inspection of the as-built hardwired disconnections between the PPS, CPCS cabinets, and the portable workstation used to download the PPS, CPCS software will be performed.	26.a Hardwired disconnections exist between the PPS, CPCS cabinets, and the portable workstation used to download the PPS, CPCS software.
	26.b Tests will be performed to verify that the PPS, CPCS software can only be modified via hardware connections and by no other means.	26.b The hardwired disconnections protect the PPS, CPCS software from unintended modifications.
27. The CPCS configuration restrictions and tests for the CPU load have been implemented.	27.a Inspection and analysis will be performed of the as-built CPCS equipment to verify that the CPCS configuration restrictions for the CPU load are designed into the final CPCS design.	27.a A report exists and concludes that the CPCS configuration restrictions for the CPU load are designed into the final CPCS design.
	27.b CPU load test of the as-built CPCS will be performed.	27.b The as-built CPCS equipment meets the restricted CPU load limit test acceptance criteria.
28. The CPCS application complies with the configuration restrictions listed in Item 28 in Section 2.5.1.1.	28. Inspection of the as-built CPCS application will be performed to verify that it complies with the configuration restrictions in Section 2.5.1.1, Item 28.	28. A report exists and concludes that the CPCS application complies with the configuration restrictions listed in Section 2.5.1.1, Item 28.

2.5.2 Diverse Actuation System

2.5.2.1 Design Description

The diverse actuation system (DAS) is a non-safety system which provides a diverse mechanism to decrease risk from the anticipated transients without scram (ATWS) events. The DAS also mitigates the effects of a postulated software common cause failure (CCF) within digital safety I&C systems.

The DAS consists of the diverse protection system (DPS), the diverse manual ESF actuation (DMA) switches, and the diverse indication system (DIS).

The DAS equipment are located in the auxiliary building as described in Table 2.5.2-1.

The DPS initiates reactor trip, turbine trip, auxiliary feedwater actuation, and safety injection actuation. The DPS consists of four channels of non-safety equipment.

The DMA switches are provided to permit the operator to actuate ESF systems from the MCR after a postulated software CCF of the PPS and ESF-CCS.

The DIS provides functions to monitor critical variables and to control heated junction thermocouple (HJTC) heater power when the CCF of digitalized safety I&C systems occurs.

1. The seismic Category I equipment identified in Table 2.5.2-1 withstands seismic design basis loads without loss of protective function.

2. The DPS is physically separate, electrically independent, and diverse from the PPS and ESF-CCS including a diverse method for the reactor trip, the turbine trip, the auxiliary feedwater actuation and safety injection actuation.

3. The DPS provides the automatic functions as shown in Table 2.5.2-2, if plant process signals exceed predetermined setpoints.

4. The DPS utilizes a 2-out-of-4 coincidence logic for the initiation of automatic functions shown in Table 2.5.2-2.

5. The DPS cabinets listed in Table 2.5.2-1 are located in separate rooms.

6. The DPS software is implemented according to each development phase of the software lifecycle process: concept phase, requirements phase, design phase,

implementation phase, test phase, and installation and checkout phase. The outputs, including documentations, of each development phase of the software lifecycle process are verified by inspection and analysis to conform to the requirements of that phase.

7. The DMA switches in the MCR are used to provide the functions identified in Table 2.5.2-3.

8. The DIS monitors and displays the variables listed in Table 2.5.2-4.

9. The DIS provides the HJTC heater power control for reactor vessel level detection when the QIAS-P is inoperable during a postulated CCF. Manual transfer of HJTC heater power control is performed using the DIS switch on the MCR safety console.

10. The DIS software is implemented according to each development phase of the software lifecycle process: concept phase, requirements phase, design phase, implementation phase, test phase, and installation and checkout phase. The outputs, including documentations, of each development phase of the software lifecycle process are verified by inspection and analysis to conform to the requirements of that phase.

11. The DPS initiates diverse reactor trip (RT), auxiliary feedwater actuation signal (AFAS), and safety injection actuation signal (SIAS) within the required response time for trip/initiation conditions identified in Table 2.5.2-2.

12. The DIS is diverse and independent from the QIAS-P.

2.5.2.2 Inspection, Test, Analyses, and Acceptance Criteria

Table 2.5.2-5 specifies the inspections, tests, analyses, and associated acceptance criteria for the DAS.

Table 2.5.2-1

Diverse Actuation System Equipment Location and Classification

Equipment Name	Location	Seismic Category	Class 1E/ Harsh Envir. Qual.
DPS Cabinets (CH. N1~N4)	Auxiliary Building	II	No / No
DPS-OM	Auxiliary Building	II	No / No
DIS HSI Equipment	Auxiliary Building	II	No / No
DIS Cabinet	Auxiliary Building	Non-Seismic	No / No
DMA Switches (1)	Auxiliary Building	I	Yes / No

(1) The DMA switches are listed in Table 2.5.2-3.

Table 2.5.2-2

DPS Automatic Functions and Actuation Signals

Function	Trip/Initiation Condition	Process Variable Input
Reactor Trip Initiation	High Pressurizer Pressure	PZR Pressure (NR) (1)
	High Containment Pressure	Containment Pressure
Auxiliary Feedwater Actuation Signal (AFAS) Initiation	Low Steam Generator Level	SG Level (WR) (1)
Safety Injection Actuation Signal (SIAS) Initiation	Low Pressurizer Pressure	PZR Pressure (WR) (1)
Turbine Trip Initiation	DPS Reactor Trip	N/A

(1) Instruments as listed in Table 2.4.1-3.

Table 2.5.2-3

Functions Manually Actuated by the DMA Switches

Function	Actuation Type
Auxiliary Feedwater Actuation Signal-1 (AFAS-1) Initiation	Manual (MCR)
Auxiliary Feedwater Actuation Signal-2 (AFAS-2) Initiation	Manual (MCR)
Auxiliary Feedwater Flow/Steam Generator 1 Level Manual Control	Manual (MCR)
Auxiliary Feedwater Flow/Steam Generator 2 Level Manual Control	Manual (MCR)
Safety Injection Actuation Signal (SIAS) Initiation	Manual (MCR)
Main Steam Isolation Signal (MSIS) Initiation	Manual (MCR)
Containment Spray Actuation Signal (CSAS) Initiation	Manual (MCR)
Containment Isolation Actuation Signal (CIAS) Initiation	Manual (MCR)

Table 2.5.2-4 (1 of 2)

Variables Monitored and Controlled by the DIS

No	Parameter Description	Display / Control at MCR
1	Representative Core Exit Temperature	Yes/No
2	Reactor Vessel Water Level-Head	Yes/No
3	Reactor Vessel Water Level-Plenum	Yes/No
4	Upper Head Temperature	Yes/No
5	Upper Head Temperature Saturation Margin	Yes/No
6	Upper Head Pressure Saturation Margin	Yes/No
7	RCS Temperature Saturation Margin	Yes/No
8	RCS Pressure Saturation Margin	Yes/No
9	CET Temperature Saturation Margin	Yes/No
10	CET Pressure Saturation Margin	Yes/No
11	Containment Pressure	Yes/No
12	Containment Temperature	Yes/No
13	Containment Water Level	Yes/No
14	Containment Hydrogen Concentration	Yes/No
15	IRWST Temperature	Yes/No
16	IRWST Level	Yes/No
17	IRWST Hydrogen Concentration	Yes/No
18	PZR Level	Yes/No
19	PZR Pressure	Yes/No
20	RCS Temperature (T_h)	Yes/No
21	RCS Temperature (T_c)	Yes/No
22	Reactor Power	Yes/No
23	Steam Generator 1 Level Protective (WR)	Yes/No
24	Steam Generator 2 Level Protective (WR)	Yes/No
25	Steam Generator 1 Pressure Protective (WR)	Yes/No
26	Steam Generator 2 Pressure Protective (WR)	Yes/No
27	SI Flow to DVI 1A	Yes/No
28	SI Flow to DVI 2B	Yes/No
29	CS Pump 1 Flow	Yes/No
30	Charging Line Flow	Yes/No

Table 2.5.2-4 (2 of 2)

No	Parameter Description	Display/ Control at MCR
31	AFW Flowrate to Steam Generator 1	Yes/No
32	AFW Flowrate to Steam Generator 2	Yes/No
33	AFWST A Level	Yes/No
34	AFWST B Level	Yes/No
35	Aux. Building Sump Level	Yes/No
36	SIT 1 Pressure (WR)	Yes/No
37	Containment Air Radiation (Iodine)	Yes/No
38	HJTC Heater Power Control	Yes/Yes

ABBREVIATIONS:

AFW : Auxiliary Feedwater
AFWST : Auxiliary Feedwater Storage Tank
Aux. : Auxiliary
CET : Core Exit Thermocouple
CS : Containment Spray
DIS : Diverse Indication System
DVI : Direct Vessel Injection
HJTC : Heated Junction Thermocouple
IRWST : In-containment RefuelingWater Storage Tank
PZR : Pressurizer
RCS : Reactor Coolant System
SG : Steam Generator
SI : Safety Injection
SIT : Safety Injection Tank
T_c : Cold Leg Temperature
T_h : Hot Leg Temperature
WR : Wide Range

Table 2.5.2-5 (1 of 7)

Diverse Actuation System ITAAC

Design Commitment	Inspections, Tests, Analyses	Acceptance Criteria
1. The seismic Category I equipment identified in Table 2.5.2-1 withstands seismic design basis loads without loss of protective function.	1.i Inspections will be performed to verify that the as-built seismic Category I equipment identified in Table 2.5.2-1 is located in a seismic Category I structure.	1.i The as-built seismic Category I equipment identified in Table 2.5.2-1 is located in a seismic Category I structure.
	1.ii Type tests, analyses, or a combination of type tests and analyses of seismic Category I equipment in Table 2.5.2-1 will be performed.	1.ii A report exists and concludes that the seismic Category I equipment identified in Table 2.5.2-1 can withstand seismic design basis loads without loss of protective function.
	1.iii Inspections and analyses will be performed to verify the as-built seismic Category I equipment identified in Table 2.5.2-1, including the supports and anchorages, is seismically bounded by the tested or analyzed conditions.	1.iii A report exists and concludes that the as-built seismic Category I equipment identified in Table 2.5.2-1, including the supports and anchorages, is seismically bounded by the tested or analyzed conditions.

Table 2.5.2-5 (2 of 7)

Design Commitment	Inspections, Tests, Analyses	Acceptance Criteria
2. The DPS is physically separate, electrically independent, and diverse from the PPS and ESF-CCS including a diverse method for the reactor trip, the turbine trip, the auxiliary feedwater actuation and safety injection actuation.	2. Inspection of the as-built DPS, PPS and ESF-CCS equipment and design documentation will be performed.	2. The as-built DPS: - is physically separated from the as-built PPS and ESF-CCS, - utilizes diverse software and hardware from the as-built PPS and ESF-CCS, - is powered from diverse power buses from the as-built PPS and ESF-CCS, and - initiates reactor trip, turbine trip, auxiliary feedwater actuation, and safety injection actuation by diverse methods from the as-built PPS and ESF-CCS. - is developed by a different design team than the design teams which developed the PPS and ESF-CCS. - is developed using different hardware for programmable logic devices and different programmable tools than the hardware and the programmable tools which are used for the PPS and ESF-CCS.
3. The DPS provides the automatic functions as shown in Table 2.5.2-2, if plant process signals exceed predetermined setpoints.	3. A test of the as-built DPS will be performed using simulated test signals.	3. The as-built DPS initiates the functions identified in Table 2.5.2-2 when the plant process signals reach predetermined setpoint.

Table 2.5.2-5 (3 of 7)

Design Commitment	Inspections, Tests, Analyses	Acceptance Criteria
4. The DPS utilizes a 2-out-of-4 coincidence logic for automatic initiation of protective functions shown in Table 2.5.2-2.	4. A test of the as-built DPS will be performed using simulated test signals.	4. The DPS coincidence logic produces an initiation when any two channels are in a trip state for a protective function.
5. The DPS cabinets listed in Table 2.5.2-1 are located in separate rooms.	5. Inspection of the as-built DPS equipment will be performed.	5. The DPS cabinets are located in separate rooms.
6. The DPS software is implemented according to each development phase of the software lifecycle process: concept phase, requirements phase, design phase, implementation phase, test phase, and installation and checkout phase. The outputs, including documentations, of each development phase of the software lifecycle process are verified by inspection and analysis to conform to the requirements of that phase.	6.a An inspection and analysis of the outputs, including documentations, of the concept phase will be performed.	6.a The concept phase outputs, including documentations, exist and conclude that the concept phase activities are performed and these activities are verified by inspection and analysis to conform to the requirements of the concept phase.
	6.b An inspection and analysis of the outputs, including documentations, of the requirements phase will be performed.	6.b The requirements phase outputs, including documentations, exist and conclude that the requirements phase activities are performed and these activities are verified by inspection and analysis to conform to the requirements of the requirements phase.
	6.c An inspection and analysis of the outputs, including documentations, of the design phase will be performed.	6.c The design phase outputs, including documentations, exist and conclude that the design phase activities are performed and these activities are verified by inspection and analysis to conform to the requirements of the design phase.

Table 2.5.2-5 (4 of 7)

Design Commitment	Inspections, Tests, Analyses	Acceptance Criteria
6. (cont.)	6.d An inspection and analysis of the outputs, including documentations, of the implementation phase will be performed	6.d The implementation phase outputs, including documentations, exist and conclude that the implementation phase activities are performed and these activities are verified by inspection and analysis to conform to the requirements of the implementation phase.
	6.e An inspection and analysis of the outputs, including documentations, of the test phase will be performed.	6.e The test phase outputs, including documentations, exist and conclude that the test phase activities are performed and these activities are verified by inspection and analysis to conform to the requirements of the test phase.
	6.f An inspection and analysis of the outputs, including documentations, of the installation and checkout phase will be performed.	6.f The installation and checkout phase outputs, including documentations, exist and conclude that the installation and checkout phase activities are performed and these activities are verified by inspection and analysis to conform to the requirements of the installation and checkout phase.
7. The DMA switches in the MCR are used to provide the functions identified in Table 2.5.2-3.	7. An operational test of the as-built DMA switches in Table 2.5.2-3 will be performed.	7. The DMA switches in the MCR are used to provide the functions identified in Table 2.5.2-3.
8. The DIS monitors and displays the variables listed in Table 2.5.2-4.	8. A test of the as-built DIS will be performed to demonstrate the monitoring and display capability using simulated test signals of the variables listed in Table 2.5.2-4	8. The DIS monitors and displays the variables listed in Table 2.5.2-4.

Table 2.5.2-5 (5 of 7)

Design Commitment	Inspections, Tests, Analyses	Acceptance Criteria
9. The DIS software is implemented according to each development phase of the software lifecycle process: concept phase, requirements phase, design phase, implementation phase, test phase, and installation and checkout phase. The outputs, including documentations, of each development phase of the software lifecycle process are verified by inspection and analysis to conform to the requirements of that phase.	9.a An inspection and analysis of the outputs, including documentations, of the concept phase will be performed.	9.a The concept phase outputs, including documentations, exist and conclude that the concept phase activities are performed and these activities are verified by inspection and analysis to conform to the requirements of the concept phase.
	9.b An inspection and analysis of the outputs, including documentations, of the requirements phase will be performed.	9.b The requirements phase outputs, including documentations, exist and conclude that the requirements phase activities are performed and these activities are verified by inspection and analysis to conform to the requirements of the requirements phase.
	9.c An inspection and analysis of the outputs, including documentations, of the design phase will be performed.	9.c The design phase outputs, including documentations, exist and conclude that the design phase activities are performed and conform to the requirements of the design phase.
	9.d An inspection and analysis of the outputs, including documentations, of the implementation phase will be performed.	9.d The implementation phase outputs, including documentations, exist and conclude that the implementation phase activities are performed and these activities are verified by inspection and analysis to conform to the requirements of the implementation phase.

Table 2.5.2-5 (6 of 7)

Design Commitment	Inspections, Tests, Analyses	Acceptance Criteria
9. (cont.)	9.e An inspection and analysis of the outputs, including documentations, of the test phase will be performed.	9.e The test phase outputs, including documentations, exist and conclude that the test phase activities are performed and these activities are verified by inspection and analysis to conform to the requirements of the test phase.
	9.f An inspection and analysis of the outputs, including documentations, of the installation and checkout phase will be performed.	9.f The installation and checkout phase outputs, including documentations, exist and conclude that the installation and checkout phase activities are performed and these activities are verified by inspection and analysis to conform to the requirements of the installation and checkout phase.
10. The DPS initiates diverse reactor trip (RT), auxiliary feedwater actuation signal (AFAS), and safety injection actuation signal (SIAS) within the required response time for trip/initiation conditions identified in Table 2.5.2-2.	10. A type test and analysis will be performed on the as-built DPS to verify that the DPS initiates diverse RT, AFAS, and SIAS identified in Table 2.5.2-2 within the required response time as described in the design basis.	10. A report exists and concludes that the as-built DPS initiates diverse RT, AFAS, and SIAS identified in Tables 2.5.2-2 within the required response time as described in the design basis.

Table 2.5.2-5 (7 of 7)

Design Commitment	Inspections, Tests, Analyses	Acceptance Criteria
11. The DIS provides the HJTC heater power control for reactor vessel level detection when the QIAS-P is inoperable during a postulated CCF. Manual transfer of HJTC heater power control is performed using the DIS switch on the MCR safety console.	11. A test of the as-built DIS will be performed to demonstrate the HJTC heater power control for reactor vessel level detection by using simulated test signals after a manual transfer of the DIS switch on the MCR safety console.	11. The DIS provides the HJTC heater power control function for reactor vessel level detection.
12. The DIS is diverse and independent from the QIAS-P.	12. An inspection of the as-built DIS, QIAS-P, and their design documentation will be performed.	12. The as-built DIS: - utilizes a diverse software and hardware from the as-built QIAS-P. - is developed by a different design team from the design team who developed the as-built QIAS-P. - is electrically isolated and physically separated from the as-built QIAS-P. - is powered from the diverse power buses from the as-built QIAS-P.

2.5.3 Qualified Indication and Alarm System

2.5.3.1 Design Description

The qualified indication and alarm system (QIAS) is a monitoring system that is used to display safety-related information and non-safety information.

The QIAS consists of the two subsystems as follows:

a. QIAS - P, Divisions A and B

b. QIAS - N

In this section, QIAS-N which is non-safety system is not described.

The QIAS-P equipment are located in the auxiliary building.

1. The seismic Category I equipment, identified in Table 2.5.3-1, withstands seismic design basis loads without loss of its safety function.

2. QIAS-P equipment identified in Table 2.5.3-1 (and the associated wiring, cables, and terminations) can withstand the electrical surge, electromagnetic interference (EMI), radio frequency interference (RFI), and electrostatic discharge (ESD) conditions that would exist before, during, and following a postulated accidents without loss of its safety function for the time required to perform the safety function.

3.a Class 1E equipment identified in Table 2.5.3-1 is powered from its respective Class 1E train.

3.b Redundant Class 1E divisions listed in Table 2.5.3-1, are physically separated and electrically independent from each other and physically separated and electrically independent from non-Class 1E equipment.

4. The QIAS-P monitors and displays the accident monitoring instrumentation variables identified in Table 2.5.3-2.

5. The application software for QIAS-P is implemented according to each lifecycle phase in the software development process: concept phase, requirements phase, design phase, implementation phase, test phase, and

installation and checkout phase. The outputs, including documentation, of each lifecycle phase in the software development process are verified by inspection and analysis to conform to the requirements of that phase.

6. Redundant Class 1E equipment listed in Table 2.5.3-1 are provided with means of identification.

7. The QIAS-P is installed in accordance with the dedicated process of commercial grade hardware and software.

8. The cabinets for processors listed in Table 2.5.3-1 have key locks and door open alarms, and are located in a vital area of the facility.

9. Hardwired disconnections exist between the QIAS-P cabinets, and the portable workstation used to download the QIAS-P software. The hardwired disconnections protect the QIAS-P software from unintended modifications.

2.5.3.2 Inspection, Test, Analyses, and Acceptance Criteria

The inspections, tests, analyses, and associated acceptance criteria for the QIAS-P are specified in Table 2.5.3-3.

Table 2.5.3-1

Qualified Indication and Alarm System-P Equipment Classification and Location

Equipment Name	Seismic Category	Class 1E	Harsh Envir.Qual.	Location
QIAS-P Processor, Division A	I	Yes	No	Auxiliary Building
QIAS-P Processor, Division B	I	Yes	No	Auxiliary Building
QIAS-P Flat Panel Display (FPD), Division A	I	Yes	No	MCR
QIAS-P FPD, Division B	I	Yes	No	MCR

Table 2.5.3-2

Accident Monitoring Instrumentation Variables

Variable
Pressurizer pressure (wide range)
Pressurizer level
Cold leg temperature (wide range)
Hot leg temperature (wide range)
Steam generator pressure
Steam generator level (wide range)
Core exit temperature
RCS saturation margin
CET saturation margin
Reactor vessel upper head saturation margin
Safety injection pump DVI flow rate
Reactor vessel level (RV closure head level/RV plenum level)
Reactor coolant system pressure
IRWST level
IRWST temperature
Holdup volume tank level
Containment water level
Containment pressure (wide range)
Reactor cavity level
Containment isolation valve position
Logarithmic reactor power (neutron flux)
Containment upper operating area radiation
Containment pressure (extended wide range)
Containment operating area radiation (for fuel handling accident)
Spent fuel pool radiation
MS ADV position
Auxiliary feedwater flow
Hydrogen concentration
4.16 kV switchgear voltage
Containment atmosphere temperature
DC Bus Voltage
Instrument Power Bus Voltage

Table 2.5.3-3 (1 of 5)

Qualified Indication and Alarm System ITAAC

Design Commitment	Inspections, Tests, Analyses	Acceptance Criteria
1. The seismic Category I equipment, identified in Table 2.5.3-1, withstands seismic design basis loads without loss of its safety function.	1.a Inspections will be performed to verify that the as-built seismic Category I equipment identified in Table 2.5.3-1 is located in a seismic Category I structure.	1.a The as-built seismic Category I equipment identified in Table 2.5.3-1 is located in a seismic Category I structure.
	1.b Type tests, analyses, or a combination of type tests and analyses of seismic Category I equipment identified in Table 2.5.3-1 will be performed.	1.b A report exists and concludes that the seismic Category I equipment identified in Table 2.5.3-1 can withstand seismic design basis loads without loss of its safety function.
	1.c Inspections and analyses will be performed to verify the as-built seismic Category I equipment identified in Table 2.5.3-1, including the supports and anchorages, is seismically bounded by the tested or analyzed conditions.	1.c A report exists and concludes that the as-built seismic Category I equipment identified in Table 2.5.3-1, including the supports and anchorages, is seismically bounded by the tested or analyzed conditions.
2. The QIAS-P equipment, identified in Table 2.5.3-1 (and the associated wiring, cables, and terminations), can withstand the electrical surge, electromagnetic interference (EMI), radio frequency interference (RFI), and electrostatic discharge (ESD) conditions that would exist before, during, and following a design basis accident without loss of its safety function for the time required to perform the safety function.	2.a Type tests, analyses, or a combination of type tests and analyses will be performed on the as-built QIAS-P equipment.	2.a A report exists and concludes that the QIAS-P equipment, identified in Table 2.5.3-1, can withstand the electrical surge, EMI, RFI, and ESD conditions (as applicable) that would exist before, during, and following a design basis accident without loss of its safety function, for the time required to perform the safety function.

Table 2.5.3-3 (2 of 5)

Design Commitment	Inspections, Tests, Analyses	Acceptance Criteria
2. (cont.)	2.b Inspection will be performed on the as-built QIAS-P equipment identified in Table 2.5.3-1 (and the associated wiring, cables, and terminations).	2.b The as-built QIAS-P equipment identified in Table 2.5.3-1 (and the associated wiring, cables, and terminations) are bounded by type tests or a combination of type tests and analyses.
3.a Class 1E equipment identified in Table 2.5.3-1 is powered from its respective Class 1E train.	3.a Tests of the as-built Class 1E equipment will be performed using a simulated test signal.	3.a The Class 1E equipment identified in Table 2.5.3-1 is powered from its respective Class 1E train.
3.b Redundant Class 1E divisions listed in Table 2.5.3-1 are physically separated and electrically independent from each other and physically separated and electrically independent from non-Class 1E equipment.	3.b.i Inspection for separation of the as-built redundant Class 1E divisions listed in Table 2.5.3-1 will be performed.	3.b.i The physical separation of as-built redundant Class 1E divisions listed in Table 2.5.3-1 is provided by distance or barriers in accordance with NRC RG 1.75 both at interfaces between redundant divisions and at interfaces between Class 1E systems and non-Class 1E systems.
	3.b.ii Analyses, tests or a combination of analyses and tests of the as-built redundant Class 1E division listed in Table 2.5.3-1 will be performed to verify its electrical independence.	3.b.ii A report exists and concludes that independence of as-built redundant Class 1E divisions listed in Table 2.5.3-1 is achieved by independent power sources and electrical circuits for each division, and by fiber optic cable interfaces and qualified isolation devices both at interfaces between redundant divisions, and at interfaces between Class 1E systems and non-Class 1E systems.

Table 2.5.3-3 (3 of 5)

Design Commitment	Inspections, Tests, Analyses	Acceptance Criteria
3.b (cont.)	3.b.iii Testing, analysis or combination of testing and analysis will be performed for the electrical isolation devices.	3.b.iii A report exists and concludes that the electrical isolation devices prevent credible faults from propagating into a Class 1E safety system divisions.
4. The QIAS-P monitors and displays the accident monitoring instrumentation variables identified in Table 2.5.3-2.	4. Test of the as-built QIAS-P equipment will be performed to demonstrate the monitoring and display capability for each QIAS-P division using actual or simulated input signals.	4. The QIAS-P monitors and displays the accident monitoring instrumentation variables identified in Table 2.5.3-2.
5. The application software for QIAS-P is implemented according to each lifecycle phase in the software development process: concept phase, requirements phase, design phase, implementation phase, test phase, and installation and checkout phase. The outputs, including documentation, of each lifecycle phase in the software development process are verified by inspection and analysis to conform to the requirements of that phase.	5.a An inspection and analysis of the outputs, including documentation, of the concept phase will be performed.	5.a The concept phase outputs, including documentation, exist and conclude that the concept phase activities are performed and these activities conform to the requirements of the concept phase.
	5.b An inspection and analysis of the outputs, including documentation, of the requirements phase will be performed.	5.b The requirements phase outputs, including documentation, exist and conclude that the requirements phase activities are performed and these activities conform to the requirements of the requirements phase.
	5.c An inspection and analysis of the outputs, including documentation, of the design phase will be performed.	5.c The design phase outputs, including documentation, exist and conclude that the design phase activities are performed and these activities conform to the requirements of the design phase.

Table 2.5.3-3 (4 of 5)

Design Commitment	Inspections, Tests, Analyses	Acceptance Criteria
5. (cont.)	5.d An inspection and analysis of the outputs, including documentation, of the implementation phase will be performed.	5.d The implementation phase outputs, including documentation, exist and conclude that the implementation phase activities are performed and these activities conform to the requirements of the implementation phase.
	5.e An inspection and analysis of the outputs, including documentation, of the test phase will be performed.	5.e The test phase outputs, including documentation, exist and conclude that the test phase activities are performed and these activities conform to the requirements of the test phase.
	5.f An inspection and analysis of the outputs, including documentation, of the installation and checkout phase will be performed.	5.f The installation and checkout phase outputs, including documentation, exist and conclude that the installation and checkout phase activities are performed and these activities conform to the requirements of the installation and checkout phase.
6. Redundant Class 1E equipment listed in Table 2.5.3-1 are provided with means of identification.	6. An inspection of the as-built equipment for conformance with the identification requirements will be performed.	6. The as-built equipment listed in Table 2.5.3-1 comply with the labeling and the color coding requirements.
7. The QIAS-P is installed in accordance with the dedicated process of commercial grade hardware and software.	7. An inspection will be performed for installation of the hardware and software.	7. A report exists and concludes that the system is installed in accordance with the dedicated process of commercial grade hardware and software.

Table 2.5.3-3 (5 of 5)

Design Commitment	Inspections, Tests, Analyses	Acceptance Criteria
8. The cabinets for processors listed in Table 2.5.3-1 have key locks and door open alarms, and are located in a vital area of the facility.	8.a A test of the as-built cabinets for processors listed in Table 2.5.3-1 for key lock capability and a test of door open alarms will be performed.	8.a Each as-built cabinet for a processor has key lock capability, and alarms are received in the as-built MCR when cabinet doors are opened.
	8.b Inspection of the cabinets for processors listed in Table 2.5.3-1 will be performed.	8.b The cabinets for processors listed in Table 2.5.3-1 are located in a vital area of the facility.
9. Hardwired disconnections exist between the QIAS-P cabinets, and the portable workstation used to download the QIAS-P software. The hardwired disconnections protect the QIAS-P software from unintended modifications.	9.a An inspection of the as-built hardwired disconnections between the QIAS-P cabinets, and the portable workstation used to download the QIAS-P software will be performed.	9.a Hardwired disconnections exist between the QIAS-P cabinets, and the portable workstation used to download the QIAS-P software.
	9.b Tests will be performed to verify that the QIAS-P software can only be modified via hardware connections and by no other means.	9.b The hardwired disconnections protect the QIAS-P software from unintended modifications.

2.5.4 Engineered Safety Features-Component Control System

2.5.4.1 Design Description

The engineered safety features (ESF) system consists of sensors, auxiliary process cabinet-safety (APC-S), engineered safety features actuation system (ESFAS) portion of the plant protection system (PPS) and engineered safety features-component control system (ESF-CCS). The sensors, APC-S, and ESFAS portion of the PPS are described in Subsection 2.5.1. Subsection 2.5.4 describes the ESF-CCS.

The ESF-CCS provides automatic actuation of ESF systems. The ESF-CCS performs the nuclear steam supply system (NSSS) ESFAS function, balance of plant (BOP) ESFAS function, and emergency diesel generator (EDG) loading sequencer function.

The ESF-CCS generates the NSSS ESF actuation signals upon receipt of ESF initiation signals from the PPS. The ESF-CCS generates the BOP ESF actuation signals upon receipt of ESFAS initiation signals from the process and effluent radiation monitoring system.

The ESF-CCS generates the EDG loading sequencer signals upon receipt of loss of power to Class 1E train buses, safety injection actuation signal (SIAS), containment spray actuation signal (CSAS), and auxiliary feedwater actuation signal (AFAS).

The ESF-CCS provides the capability for manual actuation of ESF systems and manual control of ESF components.

The ESF-CCS consists of four divisions of group controller cabinets and loop controller cabinets. The ESF-CCS equipment and manual control components are identified in Table 2.5.4-1. The ESF-CCS components are located in auxiliary building. The ESF-CCS soft control modules (ESCMs) are provided in the main control room (MCR), remote shutdown room (RSR), and remote control center (RCC).

The ESF-CCS design incorporates the following features: processors arranged in primary and standby processor configurations within each ESF-CCS division. ESF actuation functions are divided into the ESF-CCS distributed segments which receive ESFAS initiation signals from the PPS through the fiber optic cable. Separation is provided for protection between ESFAS processing function and auxiliary functions of human-system interfaces, data communication, and automatic testing. The SDL supports the

transmission of protection data on a continuous cyclical basis independent of plant transients.

1. The seismic Category I equipment and components identified in Table 2.5.4-1 withstand seismic design basis loads without loss of the safety function.

2. Redundant Class 1E divisions listed in Table 2.5.4-1 and associated field equipment are physically separated and electrically isolated from each other and physically separated and electrically isolated from non-Class 1E equipment. Class 1E qualified isolation devices such as fiber optic modems or interposing relays are applied at interfaces between redundant safety divisions and at interfaces between safety and non-safety systems.

3. The Class 1E equipment and components identified in Table 2.5.4-1 are powered from its respective Class 1E train.

4. Each ESF-CCS division receives ESF initiation signals from four divisions of the PPS and performs selective 2-out-of-4 coincidence logic to perform NSSS ESF actuation functions identified in Table 2.5.4-2.

5. Each BOP ESFAS initiation signal passes through ESF-CCS division from two divisions of the RMS as shown in Tables 2.7.6.4-2 and 2.7.6.5-2 and performs 1-out-of-2 logic taken twice except the fuel handling area emergency ventilation actuation signal which has one 1-out-of-2 logic to perform the BOP ESF actuation functions identified in Table 2.5.4-2.

6. Upon receipt of an SIAS, CSAS, or AFAS, the ESF-CCS initiates an automatic start of the EDGs and automatic EDG loading sequencer of ESF loads identified in Table 2.5.4-2.

7. Upon detecting loss of power to Class 1E buses, the ESF-CCS initiates startup of the EDGs, shedding of electrical loads, transfer of Class 1E bus connections to the EDGs, and EDG loading sequencer to the reloading of safety-related loads to the Class 1E buses.

8. Each ESF-CCS division is controlled from either the MCR or RSR or either the MCR or RCC, as selected from MCR/RSR or MCR/RCC master transfer switches.

9.a Once a NSSS ESF actuation has been actuated (automatically or manually), the ESF actuation logic is latched in the actuated state and is not reset automatically when the NSSS ESF initiating condition has been cleared. After the initiating condition has been cleared, the NSSS ESF actuation is manually reset.

9.b Once a BOP ESF actuation has been actuated (automatically or manually), the ESF actuation logic is latched in the actuated state and is not reset automatically when the ESF actuation signal has been cleared. Once the initiating condition is cleared, the ESF actuation is manually reset.

10. Loss of power or a processor lock-up in an ESF-CCS division results in (1) the respective ESF-CCS division output assuming fail-safe output condition and (2) the relay output of the hardware-based window watchdog timer (from the NRC-approved safety I&C platform) being energized and generating the alarm to prompt operator action.

11. Manual ESF actuation switches are provided in the MCR and RSR for the manual ESF actuations identified in Table 2.5.4-3.

12. The operator modules (OMs) in the MCR display ESF actuation status, manual ESF actuation status, and ESF-CCS status information including the test status for ESF actuations identified in Tables 2.5.4-2 and 2.5.4-3.

13. The component interface module (CIM) provides state-based priority logic to prioritize the ESF-CCS and diverse protection system (DPS) signals.

14. The CIM provides system-based priority logic for the front panel control switch signals on the CIM, the signals generated by the diverse manual ESF actuation (DMA) switches, the signals from the ESF-CCS, and the signals from the DPS. The front panel control switches have the highest priority, and the signals from the DMA switches have priority over signals from the ESF-CCS and DPS.

15. The application software for the ESF-CCS is implemented according to each lifecycle phase in the software development process : concept phase, requirement phase, design phase, implementation phase, test phase, and installation and checkout phase. The outputs including documentation, of each lifecycle phase in the software development process conform to the requirements of that phase.

16. The ESF-CCS equipment and components identified in Table 2.5.4-1 (and the associated wiring, cables, and terminations) withstand the electrical surge, electromagnetic interference (EMI), radio-frequency interference (RFI), and electrostatic discharge (ESD) conditions that would exist before, during, and following a design basis event without loss of its safety function for the time required to perform the safety function.

17. Redundant safety equipment and components of the ESF-CCS listed in Table 2.5.4-1 and related field equipment are provided with means of identification.

18. The Class 1E equipment and components listed in Table 2.5.4-1 are protected from accident related hazards considered in the transient and accident analyses.

19. The ESF-CCS cabinets listed in Table 2.5.4-1 have key locks and door position alarms, and are located in a vital area of the facility.

20. The ESF-CCS provides ESF actuation within required response time in the accident and transient analyses for ESF functions identified in Table 2.5.4-2.

21. The ESF-CCS has the testing function to confirm the integrity of the capability to accomplish the intended safety functions.

22. The ESF-CCS provides the interlocks important to safety identified in Table 2.5.4-4.

23. Communication independence between redundant divisions of ESF-CCS and between ESCM and information flat panel display (IFPD) is achieved by use of dual-ported memory and separation of functional processor and communication processor.

24. The ESF-CCS is installed in accordance with the dedicated process of commercial grade hardware and software.

25. The ESF-CCS LC provides the priority logic to assure the actuation of automatically actuated ESFAS signals.

26. Means are provided for manual initiation and control of the protective actions that have not been selected for automatic control in Table 2.5.4-6.

27. Hardwired disconnections exist between the ESF-CCS cabinets, and the portable workstation used to download the ESF-CCS software. The hardwired disconnections protect the ESF-CCS software from unintended modifications.

28. Communication from IFPD to ESCM is implemented by using predefined data sets, protocol, and an error checking code.

2.5.4.2 Inspections, Tests, Analyses, and Acceptance Criteria

The inspections, tests, analyses, and associated acceptance criteria for the ESF-CCS are specified in Table 2.5.4-5.

Table 2.5.4-1

ESF-CCS Equipment and Components Classification

Equipment and Component name	Seismic Category	Class 1E	Harsh Envir.Qual.
Group controller cabinet, Division A/B/C/D	I	Yes	No
Loop controller cabinet, Division A/B/C/D	I	Yes	No
Manual ESF actuation switch, Division A/B/C/D	I	Yes	No
Control channel gateway, Division A/B/C/D	I	Yes	No
ESF-CCS soft control module, Division A/B/C/D	I	Yes	No
Minimum inventory switch, Division A/B/C/D	I	Yes	No
Control panel multiplexer, Division A/B/C/D	I	Yes	No
Component interface module, Division A/B/C/D	I	Yes	No

Table 2.5.4-2 (1 of 2)

Functions Automatically Actuated by the ESF-CCS

No.	Function	Systems Actuated	Response Time Requirement
1	Safety injection actuation [NSSS ESFAS] (1)	Auxiliary feedwater system, Chemical and volume control system, Component cooling water system, Control room HVAC system, Safety injection system	Yes
2	Containment spray actuation [NSSS ESFAS] (1)	Chemical and volume control system, Component cooling water system, Containment spray system, Instrument air system	Yes
3	Containment isolation actuation [NSSS ESFAS] (1)	Chemical and volume control system, Component cooling water system, Containment hydrogen control system, Containment monitoring system, Fire protection system, Gaseous radwaste system, In-containment water storage system, Main steam system, Nitrogen system, Plant chilled water system, Primary sampling system, Process sampling system, Radiation monitoring system, Radioactive drain system, Reactor containment building purge system, Service air system, Steam generator blowdown system	Yes
4	Main steam isolation [NSSS ESFAS] (1)	Feedwater system, Main steam system, Process sampling system, Steam generator blowdown system	Yes
5	Auxiliary feedwater actuation steam generator 1 level [NSSS ESFAS] (1)	Auxiliary feedwater system, Auxiliary feedwater pump turbine system, Main steam system, Process sampling system, Steam generator blowdown system	Yes

Table 2.5.4-2 (2 of 2)

No.	Function	Systems Actuated	Response Time Requirement
6	Auxiliary feedwater actuation steam generator 2 level [NSSS ESFAS] (1)	Auxiliary feedwater system, Auxiliary feedwater pump turbine system, Main steam system, Process sampling system, Steam generator blowdown system	Yes
7	Fuel handling area emergency ventilation actuation [BOP ESFAS] (2)	Fuel handling area HVAC system	Yes
8	Containment purge isolation actuation [BOP ESFAS] (2)	Reactor containment building purge system	Yes
9	Control room emergency ventilation actuation [BOP ESFAS] (3)	Control room HVAC system	Yes
10	EDG loading sequencer	EDG system, 4.16 kV Class 1E system, Safety injection system, Containment spray system, Chemical and volume control system, Component cooling water system, Essential service water system, Auxiliary feedwater system, Essential chilled water system	Yes

(1) Parameters as listed in Table 2.5.1-3.
(2) Parameters as listed in Table 2.7.6.5-2.
(3) Parameters as listed in Table 2.7.6.4-2.

Table 2.5.4-3

Manual ESF Actuation Switches

Function	Systems Actuated
A. Main Control Room 1. NSSS ESF actuation • CSAS • SIAS • MSIS • CIAS • AFAS-1 and AFAS-2 2. BOP ESF actuation • FHEVAS • CPIAS • CREVAS	Actuated systems are same to the systems shown in Table 2.5.4-2.
B. Remote Shutdown Room 1. NSSS ESF Actuation • MSIS	

Table 2.5.4-4

ESF-CCS Interlocks Important to Safety

Interlocks
Shutdown Cooling System Suction Line Isolation Valve Interlocks
Safety Injection Tank Isolation Valve Interlocks
Component Cooling Water Non-essential Supply and Return Header Isolation Valves Interlocks
Component Cooling Water Cross Connection Line Isolation Valve Interlocks
Interlocks for Both Shutdown Cooling Pumps and Containment Spray Pumps

Table 2.5.4-5 (1 of 13)

Engineered Safety Features-Component Control System ITAAC

Design Commitment	Inspections, Tests, Analyses	Acceptance Criteria
1. The seismic Category I equipment and components identified in Table 2.5.4-1 withstand seismic design basis loads without loss of the safety function.	1.a An inspection will be performed to verify that the as-built seismic Category I equipment and components identified in Table 2.5.4-1 is located in a seismic Category I structure.	1.a The as-built seismic Category I equipment and components identified in Table 2.5.4-1 is located in a seismic Category I structure.
	1.b A type test, analysis, or a combination of a type test and analysis of seismic Category I equipment and components identified in Table 2.5.4-1 will be performed.	1.b A report exists and concludes that the seismic Category I equipment and components identified in Table 2.5.4-1 withstand seismic design basis loads without loss of safety function.
	1.c An inspection and analysis will be performed to verify the as-built seismic Category I equipment and components identified in Table 2.5.4-1, including the supports and anchorages, is seismically bounded by the tested or analyzed conditions.	1.c A report exists and concludes that the as-built seismic Category I equipment and components identified in Table 2.5.4-1, including the supports and anchorages, is seismically bounded by the tested or analyzed conditions

Table 2.5.4-5 (2 of 13)

Design Commitment	Inspections, Tests, Analyses	Acceptance Criteria
2. Redundant Class 1E divisions listed in Table 2.5.4-1 and associated field equipment are physically separated and electrically isolated from each other and physically separated and electrically isolated from non-Class 1E equipment. Class 1E qualified isolation devices such as fiber optic modems or interposing relays are applied at interfaces between redundant safety divisions and at interfaces between safety and non-safety systems.	2.a An inspection for separation of the as-built redundant Class 1E divisions listed in Table 2.5.4-1 and associated field equipment will be performed.	2.a The physical separation of as-built redundant Class 1E divisions identified in Table 2.5.4-1 and associated field equipment is provided by distance or barriers in accordance with NRC RG 1.75.
	2.b A test, analysis, or a combination of a test and analysis of the as-built redundant Class 1E divisions listed in Table 2.5.4-1and associated field equipment will be performed to verify its electrical independence.	2.b A report exists and concludes that independence of as-built redundant Class 1E divisions listed in Table 2.5.4-1 and associated field equipment is achieved by independent power sources and electrical circuits for each division, and by fiber-optic cable interfaces, conventional isolators, or other qualified isolation methods or devices at interfaces between redundant divisions, and at interfaces between safety and non-safety systems. The isolation devices used to affect safety system boundaries are Class 1E qualified.
	2.c.i A inspection for Class 1E qualified isolation devices will be performed at interfaces between redundant safety divisions and at interfaces between safety and non-safety systems.	2.c.i Electrical isolation devices are installed to prevent propagation of faults between redundant safety divisions and interfaces between safety and non-safety systems.
	2.c.ii A test, analysis, or a combination of a test and analysis will be performed for the electrical isolation devices.	2.c.ii A report exists and concludes that the electrical isolation devices prevent credible faults from propagating into a safety system division.

Table 2.5.4-5 (3 of 13)

Design Commitment	Inspections, Tests, Analyses	Acceptance Criteria
3. The Class 1E equipment and components identified in Table 2.5.4-1 are powered from its respective Class 1E train.	3. A test of the as-built ESF-CCS will be performed by providing a simulated test signal in only one Class 1E train at a time.	3. The Class 1E equipment and components identified in Table 2.5.4-1 are powered from its respective Class 1E train.
4. Each ESF-CCS division receives ESF initiation signals from four divisions of the PPS and performs selective 2-out-of-4 coincidence logic to perform NSSS ESF actuation functions identified in Table 2.5.4-2.	4. A test will be performed using simulated input signals for ESF actuation signal input to each division of the as-built ESF-CCS.	4. Each ESF-CCS division receives ESF initiation signal from four divisions of the PPS, performs selective 2-out-of-4 coincidence logic for each NSSS ESF actuation function identified in Table 2.5.4-2 and sends the control signals to the ESF components.
5. Each BOP ESFAS initiation signal passes through ESF-CCS division from two divisions of the RMS as shown in Tables 2.7.6.4-2 and 2.7.6.5-2 and performs 1-out-of-2 logic taken twice except the fuel handling area emergency ventilation actuation signal which has one 1-out-of-2 logic to perform the BOP ESF actuation functions identified in Table 2.5.4-2.	5. A test will be performed using simulated input signals for initiation input to each division of the as-built ESF-CCS to verify that the final actuated component functions as required.	5. Each BOP ESFAS initiation signal passes through ESF-CCS division from two divisions of the RMS, performs 1-out-of-2 logic taken twice except the fuel handling area emergency ventilation actuation signal which has one 1-out-of-2 logic for each BOP ESF actuation function identified in Table 2.5.4-2 and sends the control signals to the ESF components.
6. Upon receipt of an SIAS, CSAS, or AFAS, the ESF-CCS initiates an automatic start of the EDGs and automatic EDG loading sequencer of ESF loads identified in Table 2.5.4-2.	6. A test will be performed using simulated input signals for initiation input to each division of the as-built ESF-CCS.	6. Each ESF-CCS division receives an SIAS, CSAS, AFAS and initiates an automatic start of the EDGs and automatic loading sequencer of ESF loads identified in Table 2.5.4-2.

Table 2.5.4-5 (4 of 13)

Design Commitment	Inspections, Tests, Analyses	Acceptance Criteria
7. Upon detecting loss of power to Class 1E buses, the ESF-CCS initiates startup of the EDGs, shedding of electrical loads, transfer of Class 1E bus connections to the EDGs, and EDG loading sequencer to the reloading of safety-related loads to the Class 1E buses.	7. A test will be performed using simulated input signals for initiation input to each division of the as-built ESF-CCS.	7. Each ESF-CCS division receives loss of power to Class 1E buses, and initiate an automatic start of the EDGs, shedding of electrical loads, transfer of Class 1E bus connections to the EDGs, and sequencing to the reloading of safety-related loads to the Class 1E buses.
8. Each ESF-CCS division is controlled from either the MCR or remote RSR or either the MCR or RCC, as selected from MCR/RSR or MCR/RCC master transfer switches.	8. A test of the as-built ESF-CCS will be performed to demonstrate the transfer and control function between the MCR and RSR and between the MCR and RCC.	8. The as-built master transfer switches transfer controls between the MCR and RSR and between the MCR and RCC separately for each as-built ESF-CCS division, as follows: a. Controls in the RSR are disabled when controls are active in the MCR and the MCR controls the ESF-CCS division. b. Controls in the MCR are disabled when controls are active in the RSR and the RSR controls the ESF-CCS division. c. Controls in the RCC are disabled when controls are active in the MCR and the MCR controls the ESF-CCS division. d. Controls in the MCR are disabled when controls are active in the RCC and the RCC controls the ESF-CCS division.

Table 2.5.4-5 (5 of 13)

Design Commitment	Inspections, Tests, Analyses	Acceptance Criteria
9.a Once a NSSS ESF actuation has been actuated (automatically or manually), the ESF actuation logic is latched in the actuated state and is not reset automatically when the NSSS ESF initiating condition has been cleared. After the initiating condition has been cleared, the NSSS ESF actuation is manually reset.	9.a.i A test will be performed by returning simulated signals to a level within the predetermined limits of plant process signals at the as-built PPS input for NSSS ESFAS functions as identified in Tables 2.5.4-2 and 2.5.4-3 after simulating the NSSS ESF actuation.	9.a.i Each NSSS ESF actuation signal of the as-built ESF-CCS remains upon return of simulated signals to a level within the predetermined limits of plant process signals for NSSS ESFAS functions as identified in Tables 2.5.4-2 and 2.5.4-3 after simulating the ESF actuation.
	9.a.ii A Test of the as-built NSSS ESFAS reset function is performed manually to reset the actuated NSSS ESFAS function.	9.a.ii The NSSS ESF actuation is manually reset after the initiating condition has been cleared.
9.b Once a BOP ESF actuation has been actuated (automatically or manually), the actuation logic is latched in the actuated state and is not reset automatically when the BOP ESF actuation signal has been cleared. Once the initiating condition is cleared, the BOP ESF actuation is manually reset.	9.b.i A test will be performed by returning simulated signals to a level within the predetermined limits of plant process signals at the as-built RMS input for BOP ESFAS functions as identified in Tables 2.5.4-2 and 2.5.4-3 after simulating the BOP ESF actuation.	9.b.i Each BOP ESF actuation signal of the as-built ESFCCS remains upon return of simulated signals to a level within the predetermined limits of plant process signals for BOP ESFAS functions as identified in Tables 2.5.4-2 and 2.5.4-3 after simulating the ESF actuation.
	9.b.ii A Test of the as-built BOP ESFAS reset function is performed manually to reset the actuated BOP ESFAS function.	9.b.ii The BOP ESF actuation is manually reset once the initiating condition is cleared.

Table 2.5.4-5 (6 of 13)

Design Commitment	Inspections, Tests, Analyses	Acceptance Criteria
10. Loss of power or a processor lock-up in an ESF-CCS division results in (1) the respective ESF-CCS division output assuming fail-safe output condition and (2) the relay output of the hardware-based window watchdog timer (from the NRC approved safety I&C platform) being energized and generating the alarm to prompt the operator action.	10. Two separate tests will be performed. The first test simulates the processor lock up. The second test disconnects the electrical power to each division of the as-built ESF-CCS.	10. Loss of power or a processor lock-up in each ESF-CCS division results in (1) the assumed fail-safe output condition and (2) relay output of the hardware-based window watchdog timer (from the NRC-approved safety I&C platform) being energized and generating the alarm to prompt operator action.
11. Manual ESF actuation switches are provided in the MCR and RSR for the manual ESF actuations identified in Table 2.5.4-3.	11. A test will be performed to verify the actuation of the as-built ESF-CCS manual ESF actuation using the manual ESF actuation switches in the MCR and RSR.	11. Each as-built ESF-CCS manual ESF actuation identified in Table 2.5.4-3 actuates upon receipt of a signal from its respective manual ESF actuation switches in the MCR and RSR.
12. The operator modules (OMs) in the MCR display ESF actuation status, manual ESF actuation status, and ESF-CCS status information including the test status for ESF actuations identified in Tables 2.5.4-2 and 2.5.4-3.	12. A test of the as-built OM in the MCR will be performed to demonstrate the display capability.	12. Each as-built OM in the MCR displays ESF actuation status, remote manual ESF actuation status, and ESF-CCS status information including the test status for actuations identified in Tables 2.5.4-2 and 2.5.4-3.

Table 2.5.4-5 (7 of 13)

Design Commitment	Inspections, Tests, Analyses	Acceptance Criteria
13. The component interface module (CIM) provides state-based priority logic to prioritize the ESF-CCS and diverse protection system (DPS) signals.	13. A test will be performed using simulated input signals concurrently to the CIM.	13. When the CIM receives conflicting component control input signals from the ESF-CCS and DPS, the CIM prioritizes the signals so that one direction of component control always has priority over the opposite direction, regardless of which system is commanding the priority direction.
14. The CIM provides system-based priority logic for the front panel control switch signals on the CIM, the signals generated by the diverse manual ESF actuation (DMA) switches, the signals from the ESF-CCS, and the signals from the DPS. The front panel control switches have the highest priority, and the signals from the DMA switches have priority over signals from the ESF-CCS and DPS.	14. A test will be performed using simulated input signals concurrently to the CIM.	14. When the CIM receives input signals from the front panel control switch and DMA switches concurrently, the CIM prioritizes signals so that the signal of the front panel control switch has priority over signals of the DMA switches. The DMA switches have priority over signals from the ESF-CCS and DPS.

Table 2.5.4-5 (8 of 13)

Design Commitment	Inspections, Tests, Analyses	Acceptance Criteria
15. The application software for the ESF-CCS is implemented according to each life cycle phase in the software development process: concept phase, requirements phase, design phase, implementation phase, test phase, and installation and checkout phase. The outputs, including documentation, of each lifecycle phase in the software development process conform to the requirements of that phase.	15.a An inspection and analysis of the outputs, including the documentation, of the concept phase will be performed.	15.a The concept phase outputs, including documentation, exist and conclude that the concept phase activities are performed and these activities conform to the requirements of the concept phase.
	15.b An inspection and analysis of the outputs, including documentation, of the requirements phase will be performed.	15.b The requirements phase outputs, including documentation, exist and conclude that the requirements phase activities are performed and these activities conform to the requirements of the requirements phase.
	15.c An inspection and analysis of the outputs, including documentation, of the design phase will be performed.	15.c The design phase outputs, including documentation, exist and conclude that the design phase activities are performed and these activities conform to the requirements of the design phase.
	15.d An inspection and analysis of the outputs, including documentation, of the implementation phase will be performed.	15.d The implementation phase outputs, including documentation, exist and conclude that the implementation phase activities are performed and these activities conform to the requirements of the implementation phase.
	15.e An inspection and analysis of the outputs, including documentation, of the test phase will be performed.	15.e The test phase outputs, including documentation, exist and conclude that the test phase activities are performed and these activities conform to the requirements of the test phase.

Table 2.5.4-5 (9 of 13)

Design Commitment	Inspections, Tests, Analyses	Acceptance Criteria
15. (cont.)	15.f An inspection and analysis of the outputs, including documentation, of the installation and checkout phase will be performed.	15.f The installation and checkout phase outputs, including documentation, exist and conclude that the installation and checkout phase activities are performed and these activities conform to the requirements of the installation and checkout phase.
16. The ESF-CCS equipment and components identified in Table 2.5.4-1 (and the associated wiring, cables, and terminations) withstand the electrical surge, electromagnetic interference (EMI), radio-frequency interference (RFI), and electrostatic discharge (ESD) conditions that would exist before, during, and following a design basis event without loss of its safety function for the time required to perform the safety function.	16.a A type test, analysis, or a combination of a type test and analysis will be performed.	16.a A report exists and concludes that the ESF-CCS equipment identified in Table 2.5.4-1 withstand the electrical surge, EMI, RFI, and ESD conditions that would exist before, during, and following a design basis event without loss of its safety function, for the time required to perform the safety function.
	16.b An inspection will be performed on of the as-built Class 1E equipment and components identified in Table 2.5.4-1 (and the associated wiring, cables, and terminations).	16.b The as-built Class 1E equipment and components identified in Table 2.5.4-1 (and the associated wiring, cables, and terminations) are bounded by a type test or a combination of a type test and analysis.
17. Redundant safety equipment and components of the ESF-CCS listed in Table 2.5.4-1 and related field equipment are provided with means of identification.	17. An inspection of the as-built equipment for conformance with the identification requirements will be performed.	17. The as-built equipment and components listed in Table 2.5.4-1 and related field equipment comply with the labeling and the color coding requirements.

Table 2.5.4-5 (10 of 13)

Design Commitment	Inspections, Tests, Analyses	Acceptance Criteria
18. The Class 1E equipment and components listed in Table 2.5.4-1 are protected from accident related hazards considered in the transient and accident analyses.	18. An inspection and analysis will be performed on the locations of the as-built Class 1E equipment and components listed in Table 2.5.4-1.	18. A report exists and concludes that the as-built equipment and components listed in Table 2.5.4-1 are protected from accident related hazards considered in the transient and accident analyses.
19. The ESF-CCS cabinets listed in Table 2.5.4-1 have key locks and door position alarms, and are located in a vital area of the facility.	19.a A test of the as-built cabinets listed in Table 2.5.4-1 for key lock capability, and a test of door position alarms, will be performed.	19.a Each as-built cabinet listed in Table 2.5.4-1 has key lock capability, and door position alarms are received in the as-built MCR when cabinet doors are opened.
	19.b An inspection of the cabinets listed in Table 2.5.4-1 will be performed.	19.b The cabinets listed in Table 2.5.4-1 are located in a vital area of the facility.
20. The ESF-CCS provides ESF actuation within required response time in the accident and transient analyses for ESF functions identified in Table 2.5.4-2.	20.a A type test and analysis will be performed on the ESF-CCS to verify that the ESF-CCS actuates the ESF functions identified in Table 2.5.4-2 within the required response time in the accident and transient analyses.	20.a A report exists and concludes that the ESF-CCS actuates the ESF functions identified in Table 2.5.4-2 within response time requirements in the accident and transient analyses (including the communication delays from the LCL of the PPS to group controllers of the ESF-CCS).
	20.b An inspection will be performed on the as-built ESF-CCS to verify the response time requirements are met for the ESF actuation functions identified in Table 2.5.4-2.	20.b The as-built ESF actuation functions identified in Table 2.5.4-2 meet the response time requirements in the accident and transient analyses.
21. The ESF-CCS has the testing function to confirm the integrity of the capability to accomplish the intended safety functions.	21. A type tests and analysis of the ESF-CCS will be performed using simulated failure condition.	21. A report exists and concludes that the ESF-CCS has the testing function to confirm the integrity of the capability to accomplish the intended safety functions.

Table 2.5.4-5 (11 of 13)

Design Commitment	Inspections, Tests, Analyses	Acceptance Criteria
22. The ESF-CCS provides the interlocks important to safety identified in Table 2.5.4-4.	22. A test of the as-built ESF-CCS will be performed.	22. The as-built ESF-CCS provides the interlocks important to safety identified in Table 2.5.4-4 when simulated signals reach the predetermined setpoints.
23. Communication independence between redundant divisions of ESF-CCS and between ESF-CCS soft control module (ESCM) and information flat panel display (IFPD) is achieved by use of dual-ported memory and separation of functional processor and communication processor.	23.a An inspection of the as-built ESF-CCS will be performed to verify dual-ported memory is installed.	23.a Dual-ported memory exists in the as-built ESF-CCS for communication between redundant divisions of ESF-CCS and between ESCM and IFPD.
	23.b An inspection of the as-built ESF-CCS will be performed to verify that functional processor and communication processor are installed and separated.	23.b Functional processor and communication processor exist and are separated in the as-built ESF-CCS for communication between redundant divisions of ESF-CCS and between ESCM and IFPD.
	23.c Analyses, tests or a combination of analyses and tests of the communication independence will be performed.	23.c A report exists and concludes that communication independence is achieved between redundant divisions of ESF-CCS and between ESCM and IFPD.
24. The ESC-CCS is installed in accordance with the dedicated process of commercial grade hardware and software.	24. An inspection will be performed for installation of the hardware and software.	24. A report exists and concludes that the system is installed in accordance with the dedicated process of commercial grade hardware and software.

Table 2.5.4-5 (12 of 13)

Design Commitment	Inspections, Tests, Analyses	Acceptance Criteria
25. The ESF-CCS LC provides the priority logic to assure the actuation of automatically actuated ESFAS signals.	25. A test will be performed by using simulated input signals from ESFAS signals and manual component control signals concurrently to LC in the as-built ESF-CCS.	25. When the ESF-CCS LC receives conflicting component control input signals between ESFAS signals and component control signals from MI switch and ESCM, the ESF-CCS LC prioritizes the signals so that ESFAS signals always block the command of opposite state from MI switch and ESCM until protective actions are completed.
26. Means are provided for manual initiation and control of the protective actions that have not been selected for automatic control.	26. A test will be performed to verify the actuation of the as-built manual initiation and control switch in the MCR.	26. Each as-built manual initiation and control switch actuates the associated component identified in Table 2.5.4-6 to the specified position when manually operated.
27. Hardwired disconnections exist between the ESF-CCS cabinets, and the portable workstation used to download the ESF-CCS software. The hardwired disconnects protect the ESF-CCS software from unintended modifications.	27.a An inspection of the as-built hardwired disconnections between the ESF-CCS cabinets, and the portable workstation used to download the ESF-CCS software will be performed.	27.a Hardwired disconnections exist between the ESF-CCS cabinets, and the portable workstation used to download the ESF-CCS software.
	27.b Tests will be performed to verify that the ESF-CCS software can only be modified via hardware connections and by no other means.	27.b The hardwired disconnections protect the ESF-CCS software from unintended modifications.
28. Communication from IFPD to ESCM is implemented by using predefined data sets, protocol, and an error checking code.	28.a A test will be performed to verify that the signal from IFPD to ESCM has predefined data sets and protocol.	28.a Signal from IFPD to ESCM has predefined data sets and protocol for communication from IFPD to ESCM.

Table 2.5.4-5 (13 of 13)

Design Commitment	Inspections, Tests, Analyses	Acceptance Criteria
28. (cont.)	28.b A test will be performed to verify that ESCM uses an error checking code for communication from IFPD to ESCM.	28.b The Ethernet processor of ESCM checks the integrity of the received data set from IFPD using an error checking code such as cyclic redundancy check, and discards erroneous data.
	28.c Analyses, tests or a combination of analyses and tests of the communication independence will be performed.	28.c A report exists and concludes that communication from IFPD to ESCM is implemented by using predefined data sets, protocol, and an error checking code.

Table 2.5.4-6

Control for Credited Manual Operator Action

Variables	Operator Action	Control/Component
- Pressurizer Pressure (Wide Range) - Pressurizer Level	Close letdown line containment isolation valve (Diagnosis of letdown line break)	[CVCS] - Letdown Line CIV
- Pressurizer Pressure (Wide Range) - Pressurizer Level - SG Pressure - SG Level (Wide Range)	Isolation of SG atmospheric dump valve of affected SG (Diagnosis of steam generator tube rupture (SGTR))	- SG 1 MSADV - SG 2 MSADV
- Pressurizer Pressure (Wide Range) - Pressurizer Level - SG Pressure - SG Level (Wide Range) - Hot Leg Temperature (Wide Range) - Cold Leg Temperature (Wide Range) - Reactor Coolant System (RCS) Saturation Margin - Core Exit Temperature (CET) Saturation Margin	Termination of safety injection for SGTR	[Stop SIP-1,2,3,4] - SI Pump 1 - SI Pump 2 - SI Pump 3 - SI Pump 4
- SG Pressure - SG Level (Wide Range)	Termination of auxiliary feedwater (AFW) for main steam line break and main feedwater line break	[Stop AFWPs] - AFW Pump A Motor Driven - AFW Pump B Motor Driven - AFW Turbine A Reset - AFW Turbine B Reset
- Logarithmic Reactor Power (Neutron Flux)	Stop charging pump (Terminate chemical and volume control system (CVCS) charging flow for boron dilution event)	[Stop Charging Pump 1,2] - Charging Pump A - Charging Pump B

2.5.5 Control System Not Required for Safety

2.5.5.1 Design Description

Control system which is not required for safety consists of power control system (PCS) and process-component control system (P-CCS).

The PCS includes the reactor regulating system (RRS), the digital rod control system (DRCS), and the reactor power cutback system (RPCS). The P-CCS includes nuclear steam supply system (NSSS) process control system (NPCS) and balance of plant (BOP) control systems. The NPCS consists of the feedwater control system (FWCS), the steam bypass control system (SBCS), the pressurizer pressure control system (PPCS), the pressurizer level control system (PLCS), and other miscellaneous NSSS control systems which include reactor makeup control function of the chemical and volume control system (CVCS).

The PCS and P-CCS provide control of functions to maintain the plant within its normal operating range for all normal modes of plant operation.

Control and display interface devices for the PCS and P-CCS are provided in the main control room (MCR) and remote shutdown room (RSR) for control and monitoring of the PCS and P-CCS.

1. The controllers of the PCS and P-CCS are arranged in separate controller groups as identified in Table 2.5.5-1.

2. The digital equipment and software used in the PCS and P-CCS are diverse from those of the plant protection system (PPS) and engineered safety features-component control system (ESF-CCS).

3. The PCS and P-CCS are controlled from either the MCR or RSR or either the MCR or RCC, as selected from MCR/RSR or MCR/RCC master transfer switches.

The information flat panel displays (IFPDs) provide control means of PCS and P-CCS. The IFPDs are the primary human systems interface (HSI) for normal and abnormal plant conditions. They display information that is used by plant operators, including indications and alarms for critical safety and power production functions, and the performance of the

plant's preferred non-safety and safety systems that are used to control those critical functions (i.e., the critical function success paths). The IFPDs are used for non-safety control, and safety-related component selection in conjunction with control through the ESF-CCS soft control modules (ESCM).

While the IFPDs play an important role in the integrated HSI for APR1400, they are not credited for compliance to GDC 13 for anticipated operational occurrences and accident conditions. Compliance to GDC 13 is achieved through independent Class 1E HSI devices, which consist of the qualified indication and alarm system-P (QIAS-P), the Class 1E ESCMs, and minimum inventory switches. Since the IFPDs are not the credited HSI for abnormal plant conditions, but commensurate with their use as the primary operator interface, they are designed with the software grade designated as important to availability (ITA). Also the IFPDs are qualified to seismic Category II and the interface portion of IFPD for ESCM is qualified to same seismic criteria of the plant safety systems to prevent adverse impact to safety devices in the MCR.

4. The IFPDs display information for monitoring critical safety functions, and information and safety component selections for the plant systems/components used to control those functions.

5. The IFPDs are independent from Class 1E HSI devices.

6. The application software for the IFPD is implemented according to each life cycle phase in the software development process: concept phase, requirements phase, design phase, implementation phase, test phase, and installation and checkout phase. The outputs including documentation of each lifecycle phase in the software development process conform to the requirements of that phase.

7. The IFPDs do not adversely affect safety devices in the MCR during seismic conditions that would exist before, during, and following a design basis event.

Some field equipment uses non-safety embedded digital devices. These non-safety embedded digital devices are diverse from the safety systems. In case of the ultrasonic level transmitters, these devices are used in both safety and non-safety applications. The design diversity for these devices is achieved by using different manufacturers' software and hardware designs and the functional diversity is maintained between the non-safety ultrasonic level transmitters and the safety ultrasonic level transmitters.

8. The ultrasonic level transmitters for the non-safety system are diverse from the ultrasonic level transmitters for the safety system.

2.5.5.2 Inspection, Test, Analyses, and Acceptance Criteria

The inspections, tests, analyses, and associated acceptance criteria for the PCS and P-CCS are specified in Table 2.5.5-2.

Table 2.5.5-1

Controller Group Arrangement of the PCS and P-CCS

Control Function Description	Controller Group Distribution
SG1 feedwater control (FWCS 1)	This control function is in a separate controller group
SG2 feedwater control (FWCS 2)	This control function is in a separate controller group
Pressurizer pressure control (PPCS)	This control function is in a separate controller group
Pressurizer level control (PLCS)	This control function is in a separate controller group
Turbine bypass control (SBCS Main)	This control function is in a separate controller group
Turbine bypass control (SBCS Permissive)	This control function is in a separate controller group
Reactor makeup control (CVCS)	This control function is in a separate controller group
Control rod control (RRS/RPCS)	This control function is in a separate controller group
Control rod control (DRCS)	This control function is in a separate controller group
Reactor coolant pump control	This control function is in a separate controller group
HP Feedwater heater train A control	This control function is in a separate controller group
HP Feedwater heater train B control	This control function is in a separate controller group
HP Feedwater heater bypass line control	This control function is in a separate controller group
Feedwater pumps On/Off	This control function is in a separate controller group
Non-1E AC power to the station auxiliaries (13.8kV Non-Class 1E System)	This control function is in a separate controller group
Condenser vacuum and LP Feedwater heater control	This control function is in a separate controller group
Turbine control (TCS)	This control function is in a separate controller group
Miscellaneous BOP control - Circulating water pump - Condensate pump - Deaerator - Turbine gland sealing	This control function is in a separate controller group

Table 2.5.5-2 (1 of 4)

Control System Not Required for Safety ITAAC

Design Commitment	Inspections, Tests, Analyses	Acceptance Criteria
1. The controllers of PCS and P-CCS are arranged in separate controller groups as identified in Table 2.5.5-1.	1. Inspection of the as-built PCS and P-CCS will be performed.	1. The as-built PCS and P-CCS are arranged in separate controller groups as identified in Table 2.5.5-1.
2. The digital equipment and software used in the PCS and P-CCS are diverse from those of the plant protection system (PPS) and engineered safety features-component control system (ESF-CCS).	2. Inspection of the as-built PCS and P-CCS equipment will be performed. Inspection of the design documentation will be performed to confirm that the digital equipment and software is developed on a different platform and by a different design group from those of the PPS and ESF-CCS.	2. The as-built digital equipment and software used in the PCS and P-CCS are diverse from those of the PPS and ESF-CCS based on: • PCS and P-CCS use a platform which is different from the platform used in the PPS and ESF-CCS. • The design group(s) which developed the PCS and P-CCS software is different from the design group(s) which developed the PPS and ESF-CCS software.

Table 2.5.5-2 (2 of 4)

Design Commitment	Inspections, Tests, Analyses	Acceptance Criteria
3. The PCS and P-CCS are controlled from either the MCR or RSR or either the MCR or RCC, as selected from MCR/RSR or MCR/RCC master transfer switches.	3. A test of the as-built PCS and P-CCS will be performed to demonstrate the transfer and control function between the MCR and RSR and between the MCR and RCC.	3. The as-built master transfer switches transfer controls between the MCR and RSR and between the MCR and RCC for as-built PCS and P-CCS, as follows: • Controls at the RSR are disabled when controls are active in the MCR and the MCR controls the PCS and P-CCS. • Controls at the MCR are disabled when controls are active in the RSR and the RSR controls the PCS and P-CCS. • Controls at the RCC are disabled when controls are active in the MCR and the MCR controls the PCS and P-CCS. • Controls at the MCR are disabled when controls are active in the RCC and the RCC controls the PCS and P-CCS.
4. The IFPDs display information for monitoring critical safety functions, and information and safety component selections for the plant systems / components used to control those functions.	4. Inspection of the as-built IFPDs will be performed.	4. The as-built IFPDs allow monitoring the critical safety functions, and monitoring and selecting components for controlling the preferred emergency success paths for each critical function.
5. The IFPDs are independent from Class 1E HSI devices.	5. Inspection of the as-built IFPDs will be performed.	5. The IFPDs are isolated and are independent from Class 1E systems, including the QIAS-P, ESCMs, and minimum inventory switches.

Table 2.5.5-2 (3 of 4)

Design Commitment	Inspections, Tests, Analyses	Acceptance Criteria
6. The application software for the IFPD is implemented according to each life cycle phase in the software development process: concept phase, requirements phase, design phase, implementation phase, test phase, and installation and checkout phase. The outputs including documentation of each lifecycle phase in the software development process conform to the requirements of that phase.	6.a An inspection and analysis of the outputs including the documentation of the concept phase will be performed.	6.a The concept phase outputs including documentation exist and conclude that the concept phase activities are performed and these activities conform to the requirements of the concept phase.
	6.b An inspection and analysis of the outputs including the documentation of the requirements phase will be performed.	6.b The requirements phase outputs including documentation exist and conclude that the requirements phase activities are performed and these activities conform to the requirements of the requirements phase.
	6.c An inspection and analysis of the outputs including the documentation of the design phase will be performed.	6.c The design phase outputs including documentation exist and conclude that the design phase activities are performed and these activities conform to the requirements of the design phase.
	6.d An inspection and analysis of the outputs including the documentation of the implementation phase will be performed.	6.d The implementation phase outputs including documentation exist and conclude that the implementation phase activities are performed and these activities conform to the requirements of the implementation phase.
	6.e An inspection and analysis of the outputs including the documentation of the test phase will be performed.	6.e The test phase outputs including documentation exist and conclude that the test phase activities are performed and these activities conform to the requirements of the test phase.

Table 2.5.5-2 (4 of 4)

Design Commitment	Inspections, Tests, Analyses	Acceptance Criteria
6. (cont.)	6.f An inspection and analysis of the outputs including the documentation of the installation and checkout phase will be performed.	6.f The installation and checkout phase outputs including documentation exist and conclude that the installation and checkout phase activities are performed and these activities conform to the requirements of the installation and checkout phase.
7. The IFPDs do not adversely affect safety devices in the MCR during seismic conditions that would exist before, during, and following a design basis event.	7. Analysis of the as-built IFPDs will be performed.	7. A report exists and concludes that the IFPDs do not adversely affect safety devices in the MCR during seismic conditions that would exist before, during, and following a design basis event.
8. The ultrasonic level transmitters for the non-safety system are diverse from the ultrasonic level transmitters for the safety system.	8. Inspection of the design documentation will be performed to confirm that the as-built non-safety ultrasonic level transmitters are designed by using different manufacturers' software and hardware designs from safety ultrasonic level transmitters and the as-built non-safety ultrasonic level transmitters are used for different function from safety ultrasonic level transmitters.	8. Inspection results confirm that the as-built non-safety ultrasonic level transmitters use different manufacturers' software and hardware designs from the safety ultrasonic level transmitters and the as-built non-safety ultrasonic level transmitters are used for different function from safety ultrasonic level transmitters.

2.6 Electric Power

2.6.1 AC Electric Power Distribution System

2.6.1.1 Design Description

The ac electric power distribution system consists of the transmission system, the plant switchyard, main transformer (MT), two unit auxiliary transformers (UATs), two standby auxiliary transformers (SATs), a main generator (MG), a generator circuit breaker (GCB), isolated phase bus, switchgears, load centers (LCs), and motor control centers (MCCs). The electric power distribution system also includes the power, control, instrumentation cables and raceways, and electrical protection devices, such as circuit breakers and fuses.

The Class 1E ac electric power distribution system consists of two independent, redundant divisions. Each division consists of two independent trains.

Four emergency diesel generators (EDGs) provide Class 1E power to the four independent Class 1E trains respectively, during a LOOP or a LOOP concurrent with DBA. One AAC generator provides power to the permanent non-safety buses during a LOOP or to one Class 1E train during SBO.

During plant normal operation, the MG supplies power through the GCB and MT to the transmission system, and to the UATs. When the GCB is open, power is backed from the transmission system through the MT to the UATs. In the event of a loss of preferred power supply through the UATs, medium voltage (non-Class 1E 13.8 kV and Class 1E & non-Class 1E 4.16 kV) buses are powered from the SATs after performing an automatic bus transfer from the normal offsite preferred power supply to the alternate offsite preferred power supply.

The ac electric power distribution system is designed as follows:

1. The functional arrangement of ac electric power distribution system is as described in the Design Description of Subsection 2.6.1.1 and as shown in Figure 2.6.1-1.

2. The seismic Category I equipment identified in Table 2.6.1-1, including the supports and anchorages, can withstand seismic design basis loads without loss of safety function.

3.a Controls exist in the MCR to operate the electric power distribution system, specifically to open and close the 4.16 kV circuit breakers for the Class 1E buses identified in Table 2.6.1-2.

3.b Controls exist in the RSR to operate the electric power distribution system, specifically to open and close the 4.16 kV circuit breakers for the Class 1E buses identified in Table 2.6.1-2.

3.c Displays and alarms exist and are retrievable in the MCR as defined in Table 2.6.1-2.

3.d Displays and alarms exist and are retrievable in the RSR as defined in Table 2.6.1-2.

4. Class 1E medium voltage switchgears, load centers, and motor control centers located in seismic Category I structures within the auxiliary building, EDG building, and ESW buildings are located in their respective train areas.

5. MT and UATs are separated from the SATs.

6. MT, UATs, and SATs are provided with their own oil pit, drain, fire deluge system.

7.a The MG, UATs, MT, and GCB power feeders are separated from the SATs power feeders.

7.b The MG, UAT, MT, and GCB instrumentation and control circuits are separated from the SATs instrumentation and control circuits.

8. If the normal preferred offsite power supply is not available, Class 1E 4.16 kV medium voltage buses are automatically transferred to the alternate preferred offsite power supply.

9. Instrumentation and control power for Class 1E medium voltage switchgear and load centers is supplied from the Class 1E dc power system in the same train.

10.a Independence is provided between each of the four trains of Class 1E distribution equipment and circuits.

10.b Independence is provided between Class 1E distribution equipment and circuits and non-Class 1E distribution equipment and circuits.

10.c The Class 1E distribution equipment of independent trains, identified in Table 2.6.1-1, is located in separate rooms in the auxiliary building.

11. Class 1E electric power distribution system equipment and circuits are rated to withstand fault currents for the time required to clear the fault from its power source.

12. Equipment and circuits of independent trains including raceway are uniquely identified by their train color and identifying nomenclature.

13.a The raceway systems for Class 1E electric power distribution system cables are designed to meet seismic Category I requirements.

13.b Class 1E electric power distribution system cables are routed in seismic Category I structures and in their respective raceway trains.

14. Class 1E equipment is not prevented from performing its safety functions by design basis harmonic distortion waveforms.

15. Protection is provided for Class 1E equipment from degraded voltage condition.

16. There are no automatic connections between Class 1E trains.

17. Class 1E qualified isolation devices provide independence between Class 1E electric power distribution equipment and non-Class 1E loads.

18.a The switchyard power circuit breakers (PCBs) open in the event of electrical faults in either MT, GCB, UATs, SATs, or associated equipment and circuits.

18.b The GCB opens in the event of plant trip conditions, or electrical faults in either MG, MT, UATs, or associated equipment and circuits.

19. The UATs and SATs are designed and sized to meet the worst case loading conditions for all modes of plant operation and accident conditions.

20. Overcurrent protection is set for proper coordination of Class 1E ac electric distribution system.

21. The post-fire safe shutdown circuit analysis provides assurance that one success path of shutdown SSCs remains free of fire damage.

22. The Class 1E cables are sized considering derating due to ambient temperature, cable grouping, and other derating effects as applicable.

23. The open phase detection and protection (OPDP) system is capable of detecting the following open phase conditions (OPCs) over the full range of transformer loading from no load to full load:

    - loss of one phase with and without a high-impedance ground fault condition; and

    - loss of two phases without a high-impedance ground fault condition.

24. Upon detection of an OPC with or without a high-impedance ground fault, the OPDP system actuates an alarm in the MCR and RSR.

25. In case an OPC with or without a high-impedance ground fault on the primary side of the MT or SATs occurs and safe shutdown capability is not assured due to the OPC while the transformer(s) is (are) under loading condition, the Class 1E medium voltage switchgear buses are automatically separated from the degraded offsite power source and transferred to the alternate offsite power source or the onsite standby source as designed.

26. Transients due to failures or incidental operation of the non-Class 1E electrical equipment will not cause failure of the Class 1E loads.

2.6.1.2 Inspection, Test, Analyses, and Acceptance Criteria

Table 2.6.1-3 specifies the inspections, tests, analyses, and associated acceptance criteria for the ac electrical power distribution system.

Table 2.6.1-1

AC Electric Power Distribution System Safety-related Equipment Characteristics

Equipment Name	Seismic Category	Class 1E/ Harsh Envir. Qual.
Class 1E 4.16 kV Switchgear 1A	I	Yes/No
Class 1E 4.16 kV Switchgear 1B	I	Yes/No
Class 1E 4.16 kV Switchgear 1C	I	Yes/No
Class 1E 4.16 kV Switchgear 1D	I	Yes/No
Class 1E 480 V Load Center 1A	I	Yes/No
Class 1E 480 V Load Center 1B	I	Yes/No
Class 1E 480 V Load Center 1C	I	Yes/No
Class 1E 480 V Load Center 1D	I	Yes/No
Class 1E 480 V Load Center 02	I	Yes/No
Class 1E Motor Control Center 1A, 2A, 3A, 4A, 5A	I	Yes/No
Class 1E Motor Control Center 1B, 2B, 3B, 4B, 5B	I	Yes/No
Class 1E Motor Control Center 1C, 2C, 3C, 4C	I	Yes/No
Class 1E Motor Control Center 1D, 2D, 3D, 4D	I	Yes/No

Table 2.6.1-2

AC Electric Power Systems Equipment Alarms/Displays and Control

Equipment Name	Alarm/Display at MCR	Alarm/Display at RSR	Control at MCR/RSR
Class 1E 4.16 kV Switchgear 1A	Yes/Yes	Yes/Yes	Yes/Yes (Breaker open and close)
Class 1E 4.16 kV Switchgear 1B	Yes/Yes	Yes/Yes	Yes/Yes (Breaker open and close)
Class 1E 4.16 kV Switchgear 1C	Yes/Yes	Yes/Yes	Yes/Yes (Breaker open and close)
Class 1E 4.16 kV Switchgear 1D	Yes/Yes	Yes/Yes	Yes/Yes (Breaker open and close)
Class 1E 480 V Load Center 1A	Yes/Yes	Yes/Yes	No/No
Class 1E 480 V Load Center 1B	Yes/Yes	Yes/Yes	No/No
Class 1E 480 V Load Center 1C	Yes/Yes	Yes/Yes	No/No
Class 1E 480 V Load Center 1D	Yes/Yes	Yes/Yes	No/No
Class 1E 480 V Load Center 02	Yes/Yes	Yes/Yes	No/No
Class 1E Motor Control Center 1A, 2A, 3A, 4A, 5A	Yes/No	Yes/No	No/No
Class 1E Motor Control Center 1B, 2B, 3B, 4B, 5B	Yes/No	Yes/No	No/No
Class 1E Motor Control Center 1C, 2C, 3C, 4C	Yes/No	Yes/No	No/No
Class 1E Motor Control Center 1D, 2D, 3D, 4D	Yes/No	Yes/No	No/No
Unit Auxiliary Transformer 1M, 1N	Yes/No	Yes/No	No/No
Standby Auxiliary Transformer 2M, 2N	Yes/No	Yes/No	No/No
Main Transformer	Yes/No	Yes/No	No/No
Generator Circuit Breaker	Yes/Yes	Yes/Yes	Yes/Yes (Breaker open and close)

Table 2.6.1-3 (1 of 9)

AC Electric Power Distribution System ITAAC

Design Commitment	Inspections, Tests, Analyses	Acceptance Criteria
1. The functional arrangement of ac electric power distribution system is as described in the Design Description of Subsection 2.6.1.1 and as shown in Figure 2.6.1-1.	1. Inspection of the as-built ac electric power system will be performed.	1. The as-built ac electric power system conforms with the functional arrangement as described in the Design Description of Subsection 2.6.1.1 and as shown in Figure 2.6.1-1.
2. The seismic Category I equipment identified in Table 2.6.1-1, including the supports and anchorages, can withstand seismic design basis loads without loss of safety function.	2.a Inspections will be performed to verify that the as-built seismic Category I equipment is located in seismic Category I structures.	2.a The as-built seismic Category I equipment identified in Table 2.6.1-1 is located in seismic Category I structures.
	2.b Type tests, analyses, or a combination of type tests and analyses of seismic Category I equipment will be performed.	2.b A report exists and concludes that the seismic Category I equipment identified in Table 2.6.1-1 can withstand seismic design basis loads without loss of safety function.
	2.c Inspections will be performed to verify that the as-built seismic Category I equipment, including the supports and anchorages, are seismically bounded by the tested or analyzed conditions.	2.c A report exists and concludes that the as-built as-built equipment, including the supports and anchorages, are seismically bounded by the tested or analyzed conditions.
3.a Controls exist in the MCR to operate the electric power distribution system, specifically to open and close the 4.16 kV circuit breakers for the Class 1E buses identified in Table 2.6.1-2.	3.a Tests will be performed using the electric power distribution system controls in the MCR to open and close the 4.16 kV circuit breakers for the Class 1E buses.	3.a Electric power distribution system controls in the as-built MCR open and close the 4.16 kV circuit breakers for the Class 1E buses identified in Table 2.6.1-2.

Table 2.6.1-3 (2 of 9)

Design Commitment		Inspections, Tests, Analyses		Acceptance Criteria	
3.b	Controls exist in the RSR to operate the electric power distribution system, specifically to open and close the 4.16 kV circuit breakers for the Class 1E buses identified in Table 2.6.1-2.	3.b	Tests will be performed using the electric power distribution system controls in the RSR to open and close the 4.16 kV circuit breakers for the Class 1E buses.	3.b	Electric power distribution system controls in the as-built RSR open and close the 4.16 kV circuit breakers for the Class 1E buses identified in Table 2.6.1-2.
3.c	Displays and alarms exist and are retrievable in the MCR as defined in Table 2.6.1-2.	3.c	Inspections of the as-built displays and alarms in the MCR will be performed.	3.c	Displays and alarms exist and are retrieved in the MCR as defined in Table 2.6.1-2.
3.d	Displays and alarms exist and are retrievable in the RSR as defined in Table 2.6.1-2.	3.d	Inspections of the as-built displays and alarms in the RSR will be performed.	3.d	Displays and alarms exist and are retrieved in the RSR as defined in Table 2.6.1-2.
4.	Class 1E medium voltage switchgears, load centers, and motor control centers located in seismic Category I structures within the auxiliary building, EDG building, and ESW buildings are located in their respective train areas.	4.	Inspection of the as-built Class 1E medium voltage switchgears, load centers, and motor control centers will be performed.	4.	The as-built Class 1E medium voltage switchgears, load centers, and motor control centers located in seismic Category I structures within the auxiliary building, EDG building, and ESW buildings are located in their respective train areas.
5.	MT and UATs are separated from the SATs.	5.	Inspection and analysis of the as-built MT and UATs will be performed.	5.	The as-built MT and UATs are separated from the SATs by 3-hour-rated fire barriers.
6.	MT, UATs, and SATs are provided with their own oil pit, drain, fire deluge system.	6.	Inspection of the as-built MT, UATs and SATs will be performed.	6.	The as-built MT, UATs, and SATs are provided with their own oil pit, drain, fire deluge system.

Table 2.6.1-3 (3 of 9)

Design Commitment		Inspections, Tests, Analyses		Acceptance Criteria	
7.a	The MG, UATs, MT, and GCB power feeders are separated from the SATs power feeders.	7.a	Inspection and analysis of the as-built MG, UATs, MT, GCB, and SATs power feeders will be performed.	7.a	The as-built MG, UATs, MT, and GCB power feeders are separated from the SATs power feeders.
7.b	The MG, UAT, MT, and GCB instrumentation and control circuits are separated from the SATs instrumentation and control circuits.	7.b	Inspection and analysis of the as-built MG, UATs, MT, GCB, and SATs instrumentation and control circuits will be performed.	7.b	The as-built MG, UATs, MT, and GCB instrumentation and control circuits are separated from the SATs instrumentation and control circuits.
8.	If the normal preferred offsite power supply is not available, Class 1E 4.16 kV medium voltage buses are automatically transferred to the alternate preferred offsite power supply.	8.	Tests will be performed to verify that as-built Class 1E 4.16 kV medium voltage buses are automatically transferred to the alternate preferred offsite power supply through the fast transfer and residual voltage transfer schemes.	8.	Each as-built Class 1E 4.16 kV medium voltage buses are automatically transferred to the alternate preferred offsite power supply, through the fast transfer and residual voltage transfer schemes, when normal preferred offsite power supply is not available and alternate preferred power supply is available.
9.	Instrumentation and control power for Class 1E medium voltage switchgear and load centers is supplied from the Class 1E dc power system in the same train.	9.	Inspection of the as-built Class 1E medium voltage switchgear and load centers will be performed.	9.	Instrumentation and control power for the as-built Class 1E switchgear and load centers of each train are supplied control power from their respective Class 1E trains.
10.a	Independence is provided between each of the four trains of Class 1E distribution equipment and circuits.	10.a	Tests will be performed on the as-built Class 1E distribution equipment and circuits by providing a test signal in only one train at a time.	10.a	The test signal is present in the as-built Class 1E train under test.

Table 2.6.1-3 (4 of 9)

Design Commitment	Inspections, Tests, Analyses	Acceptance Criteria
10.b Independence is provided between Class 1E distribution equipment and circuits and non-Class 1E distribution equipment and circuits.	10.b Tests will be performed on the as-built Class 1E and non-Class 1E distribution equipment and circuits by providing a test signal in only one train for Class 1E or one division for non-Class 1E at a time.	10.b The test signal is present in the as-built Class 1E train or non-Class 1E division under test.
10.c The Class 1E distribution equipment of independent trains, identified in Table 2.6.1-1, is located in separate rooms in the auxiliary building.	10.c Inspection of the as-built Class 1E distribution equipment will be performed.	10.c The as-built Class 1E distribution equipment of independent trains, identified in Table 2.6.1-1, is located in separate rooms in the auxiliary building.
11. Class 1E electric power distribution system equipment and circuits are rated to withstand fault currents for the time required to clear the fault from its power source.	11.a Analyses will be performed to verify the Class 1E distribution equipment and circuits are sized to withstand the maximum fault currents for the time required to clear the fault from its power source	11.a A report exists and concludes that the Class 1E distribution equipment and circuits are sized to carry the worst case load currents for the time required to clear the fault from its power source.
	11.b Inspections will be performed to verify that the ratings of as-built Class 1E distribution equipment and circuits bound the results of the analyses to carry the worst-case load currents for the time required to clear the fault from its power source.	11.b The ratings of as-built Class 1E distribution equipment and circuits bound the results of the analyses to carry the worst-case load currents for the time required to clear the fault from its power source.
12. Equipment and circuits of independent trains including raceway are uniquely identified by their train color and identifying nomenclature.	12. Inspection of the as-built Class 1E equipment and circuits of independent trains including raceway will be performed.	12. The as-built Class 1E equipment and circuits of independent trains including raceway are uniquely identified by their train color and identifying nomenclature.

Table 2.6.1-3 (5 of 9)

Design Commitment	Inspections, Tests, Analyses	Acceptance Criteria
13.a The raceway systems for Class 1E electric power distribution system cables are designed to meet seismic Category I requirements.	13.a Inspections and analyses will be performed to verify that the as-built raceway systems for Class 1E electric power distribution system cables are supported by a seismic Category I designed support system.	13.a A report exists and concludes that the as-built raceway system for Class 1E electric power distribution system cables are supported by a seismic Category I designed support system.
13.b Class 1E electric power distribution system cables are routed in seismic Category I structures and in their respective raceway trains.	13.b Inspection of the as-built electric power distribution system cables and raceways will be performed.	13.b The as-built Class 1E train cables are routed in seismic Category I Structures and in their respective raceway trains.
14. Class 1E equipment is not prevented from performing its safety functions by design basis harmonic distortion waveforms.	14. Analysis of the as-built electric power distribution system to determine harmonic distortions will be performed.	14. A report exists and concludes that harmonic distortion waveforms do not exceed acceptable voltage distortion limits on the Class 1E electric power distribution system.
15. Protection is provided for Class 1E equipment from degraded voltage condition.	15.a Analyses will be performed to verify that the Class 1E medium voltage switchgears are protected from degraded voltage conditions.	15.a A report exists and concludes that the Class 1E medium voltage switchgears are protected from degraded voltage conditions by degraded voltage relays.
	15.b Inspections and tests will be performed to verify that the as-built protection system bounds the result of analyses for the protection of the Class 1E medium voltage switchgears from degraded voltage conditions.	15.b The as-built protection system bounds the result of analyses for the protection of the Class 1E medium voltage switchgears from degraded voltage conditions.
16. There are no automatic connections between Class 1E trains.	16. Inspection of the as-built Class 1E trains will be performed.	16. The as-built Class 1E trains have no automatic connections between Class 1E trains.

Table 2.6.1-3 (6 of 9)

Design Commitment	Inspections, Tests, Analyses	Acceptance Criteria
17. Class 1E qualified isolation devices provide independence between Class 1E electric power distribution equipment and non-Class 1E loads.	17.a Type tests, analyses, or a combination of type tests and analyses will be performed to verify the qualification of isolation devices.	17.a A report exists and concludes that the Class 1E electric power distribution equipment is isolated from as-built non-Class 1E loads by Class 1E qualified isolation devices in accordance with NRC RG 1.75
	17.b Inspection of the as-built Class 1E electric power distribution equipment will be performed.	17.b Class 1E qualified isolation devices are provided between the as-built Class 1E electric power distribution equipment and non-Class 1E loads.
18.a The switchyard PCBs open in the event of electrical faults in either MT, GCB, UATs, SATs, or associated equipment and circuits.	18.a Tests will be performed to verify that the as-built switchyard PCB trip signal is actuated by a simulated electrical fault trip signal for faults in either MT, GCB, UATs, SATs, or associated equipment and circuits.	18.a The as-built switchyard PCBs open in the event of electrical faults in either MT, GCB, UATs, SATs, or associated equipment and circuits.
18.b The GCB opens in the event of plant trip conditions, or electrical faults in either MG, MT, UATs, or associated equipment and circuits.	18.b Tests will be performed to verify that the as-built GCB trip signal is actuated by a simulated plant trip conditions, or electrical fault trip signal for faults in either MG, MT, UATs, or associated equipment and circuits.	18.b The as-built GCB opens in the event of plant trip conditions, or electrical faults in either MG, MT, UATs, or associated equipment and circuits.
19. The UATs and SATs are designed and sized to meet the worst case loading conditions for all modes of plant operation and accident conditions.	19.a Analyses will be performed to verify that the as-built UATs and SATs are sized for the worst case loading conditions for all modes of plant operation and accident conditions.	19.a A report exists and concludes that the as-built UATs and SATs are designed and sized for the worst case loading conditions for all modes of plant operation and accident conditions.

Table 2.6.1-3 (7 of 9)

Design Commitment	Inspections, Tests, Analyses	Acceptance Criteria
19. (cont.)	19.b Inspections will be performed to verify that the ratings of as-built UATs and SATs meet the size requirements determined by the analysis for the worst case loading conditions for all modes of plant operation and accident conditions.	19.b The ratings of the as-built UATs and SATs bound the size requirements determined by the analysis.
20. Overcurrent protection is set for proper coordination of Class 1E ac electric distribution system.	20.a Analysis of the as-built Class 1E ac electrical distribution system overcurrent protection will be performed to verify proper coordination.	20.a A report exists and concludes that the as-built Class 1E ac electric distribution system overcurrent protection coordinates.
	20.b Inspections and tests will be performed on the Class 1E ac electrical distribution system to verify that the as-built overcurrent protection devices setting is in accordance with the results of the analysis for proper coordination.	20.b A report exists and concludes that the as-built Class 1E ac electrical distribution system overcurrent protection devices is set in accordance with the results of the analysis for proper coordination.
21. The post-fire safe shutdown circuit analysis provides assurance that one success path of shutdown SSCs remains free of fire damage.	21. Analysis of post-fire safe shutdown circuit and supporting breaker coordination will be performed.	21. A report exists and concludes that the post-fire safe shutdown circuit analysis provides assurance that one success path of shutdown SSCs remains free of fire damage.
22. The Class 1E cables are sized considering derating due to ambient temperature, cable grouping, and other derating effects as applicable.	22.a An analysis will be performed to verify the Class 1E cables are sized considering derating due to ambient temperature, cable grouping, and other derating effects as applicable.	22.a A report exists and concludes that the Class 1E cables are sized considering derating due to ambient temperature, cable grouping, and other derating effects as applicable.
	22.b An inspection will be performed to verify that the as -built cable sizes bound the minimum sizes determined by the analysis.	22.b The as-built cable sizes bound the minimum sizes determined by the analysis.

Table 2.6.1-3 (8 of 9)

Design Commitment	Inspections, Tests, Analyses	Acceptance Criteria
23. The open phase detection and protection (OPDP) system is capable of detecting the following open phase conditions (OPCs) over the full range of transformer loading from no load to full load: - loss of one phase with and without a high-impedance ground fault condition; and - loss of two phases without a high-impedance ground fault condition.	23. Analyses will be performed to verify that the OPDP system is capable of detecting the open phase conditions over the full range of transformer loading from no load to full load.	23. A report exists and concludes that the OPDP system is capable of detecting the open phase conditions over the full range of transformer loading from no load to full load with sufficient details (e.g., relay setpoints, time delays, etc.).
24. Upon detection of an OPC with or without a high-impedance ground fault, the OPDP system actuates an alarm in the MCR and RSR.	24. Tests will be performed on the as-built OPDP system using simulated signals to verify that the as-built OPDP system provides an alarm in the MCR and RSR.	24. Using simulated signals, the OPDP system actuates an alarm in the MCR and RSR.
25. In case an OPC with or without a high-impedance ground fault on the primary side of the MT or SATs occurs and safe shutdown capability is not assured due to the OPC while the transformer(s) is (are) under loading condition, the Class 1E medium voltage switchgear buses are automatically separated from the degraded offsite power source and transferred to the alternate offsite power source or the onsite standby source as designed.	25. Tests will be performed using simulated signals to verify that as-built Class 1E medium voltage switchgear buses are automatically separated from the degraded offsite power source and transferred to the alternate offsite power source or the onsite standby source as designed.	25. Upon a simulated OPC, each as-built Class 1E medium voltage switchgear buses are automatically disconnected and, transferred to the alternate offsite power source or the onsite standby source as designed.

Table 2.6.1-3 (9 of 9)

Design Commitment	Inspections, Tests, Analyses	Acceptance Criteria
26. Transients due to failures or incidental operation of the non-Class 1E electrical equipment will not result in failure of the Class 1E loads.	26.a Analyses will be performed to verify that the voltage variation at the Class 1E buses is maintained within acceptable limits during the non-Class 1E large motor starting condition.	26.a A report exists and concludes that the voltage variation at the Class 1E buses is maintained within acceptable limits during the non-Class 1E large motor starting condition.
	26.b Analyses will be performed to verify that the transient effect of re-acceleration of the non-Class 1E motors do not hinder the re-acceleration of the Class 1E motors during a bus transfer.	26.b A report exists and concludes that the transient effect of re-acceleration of the non-Class 1E motors do not hinder the re-acceleration of the Class 1E motors during a bus transfer.

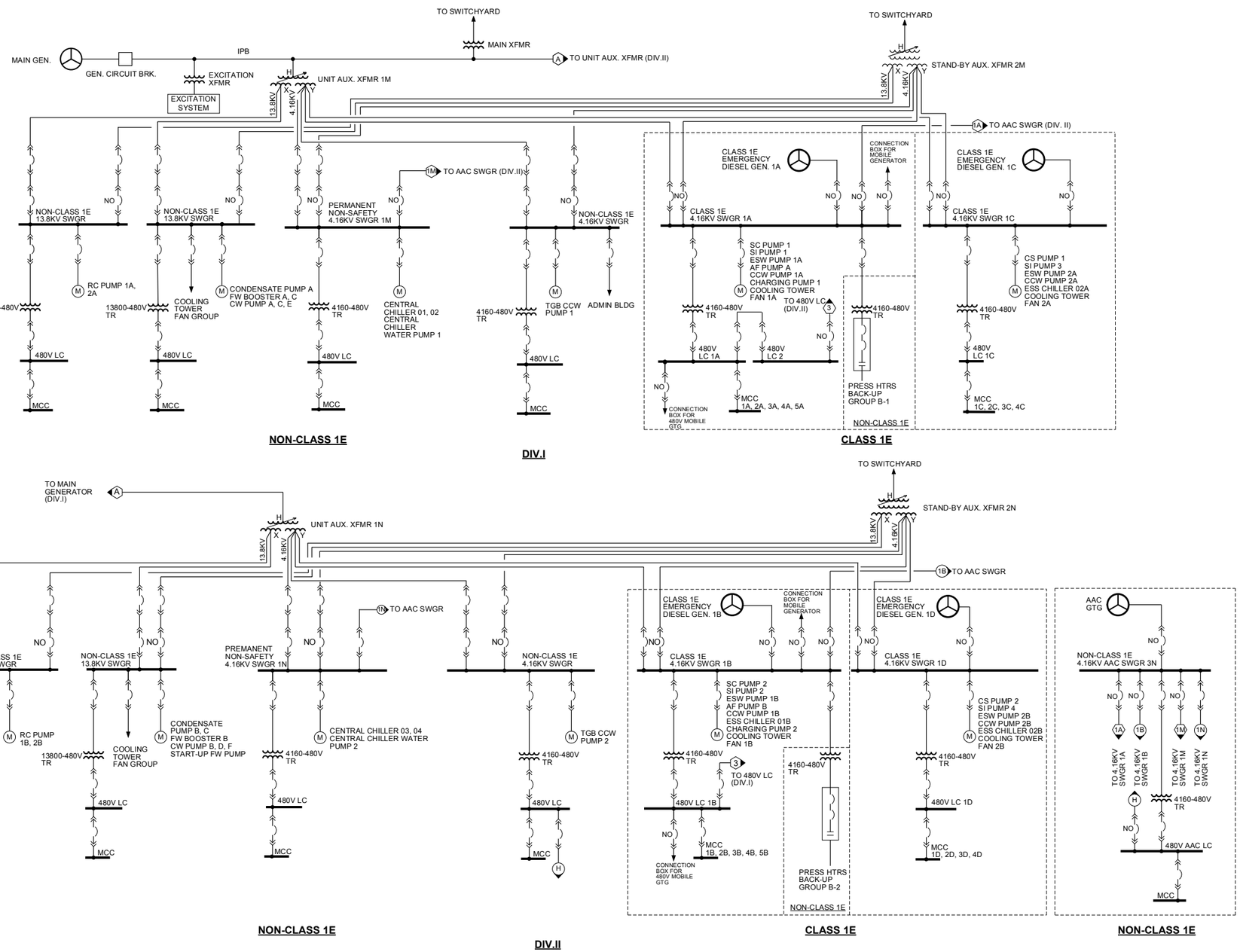

Figure 2.6.1-1 AC Electrical Power Distribution System

2.6.2 Emergency Diesel Generator System

2.6.2.1 Design Description

The emergency diesel generator (EDG) system is a safety-related system which has four diesel generators and their respective support systems such as fuel oil, lube oil, engine cooling, starting air, and combustion air intake and exhaust systems. Four EDGs provide Class 1E power to the four independent Class 1E trains, respectively, during a LOOP or a LOOP concurrent with DBA. EDGs are normally in stand-by mode.

The EDG system is designed as follows:

1. The functional arrangement of the EDG system is as described in the Design Description of Subsection 2.6.2.1 and in Tables 2.6.2-1 and 2.6.2-2.

2.a The ASME Code components identified in Table 2.6.2-2 are designed and constructed in accordance with ASME Section III requirements.

2.b The ASME Code piping, including supports, identified in Table 2.6.2-1 is designed and constructed in accordance with ASME Section III requirements.

3.a Pressure boundary welds in ASME Code components identified in Table 2.6.2-2 meet ASME Section III requirements.

3.b Pressure boundary welds in ASME Code piping identified in Table 2.6.2-1 meet ASME Section III requirements.

4.a The ASME Code components identified in Table 2.6.2-2 retain their pressure boundary integrity at their design pressure.

4.b The ASME Code piping identified in Table 2.6.2-1 retains its pressure boundary integrity at its design pressure.

5.a The seismic Category I diesel engines and generators, including the supports and anchorages, withstand seismic design basis loads without loss of safety function.

5.b The seismic Category I components identified in Table 2.6.2-2, including the supports and anchorages, withstand seismic design basis loads without loss of safety function.

5.c The seismic Category I piping, including supports, identified in Table 2.6.2-1 withstand seismic design basis loads without loss of safety function.

6.a Controls exist in the MCR and EDG room to start and stop each EDG and to synchronize each EDG to its respective Class 1E bus.

6.b Controls exist in the RSR to start and stop each EDG and to synchronize each EDG to its respective Class 1E bus.

6.c Displays and alarms exist and are retrievable in the MCR as defined in Table 2.6.2-2.

6.d Displays and alarms exist and are retrievable in the RSR as defined in Table 2.6.2-2.

7. Each mechanical division of EDG and its support systems (A, B, C & D) is physically separated from the other divisions.

8.a Each diesel fuel oil transfer pump is capable of transferring oil from the diesel fuel oil storage tank to its corresponding day tank at sufficient pressure and flow to cover the maximum demand at EDG continuous rated load while simultaneously increasing day tank level.

8.b The diesel fuel oil transfer pumps have sufficient net positive suction head (NPSH).

9. Each EDG has fuel storage capacity to provide fuel to its EDG for a period of seven days with the EDG supplying the power requirements for the most limiting design basis event.

10. Each day tank provides fuel oil for at least 60 minutes plus a minimum additional margin of 10 percent at EDG rated load.

11. One transfer pump in each train is designed to automatically supply diesel fuel oil from the storage tank to the day tank prior to actuation of low level alarm and stops automatically on a fuel oil day tank high-level signal.

12. Each lube oil makeup tank provides lube oil to its respective EDG for seven continuous days of EDG full power rated operation.

13. The starting air system receiver tanks of each EDG have a combined air capacity for five starts of the EDG without replenishing air to the receiver tanks.

14. The air intakes for EDG combustion are separated from the EDG exhaust ducts to prevent the degradation of the EDG power output due to the recirculation of the exhaust gases.

15. A loss of power to a Class 1E medium voltage safety bus automatically starts its respective EDG and load sheds the Class 1E bus within the affected train. Following attainment of required voltage and frequency, the EDG automatically connects to its respective bus. After the EDG connects to its respective bus, the non-accident loads are automatically sequenced onto the bus.

16. The Class 1E auxiliary power for EDG support systems is supplied from the same train, respectively.

17. For a loss of power to a Class 1E medium voltage safety bus concurrent with a design basis event condition (SIAS/CSAS/AFAS), each EDG automatically starts and load shedding of the Class 1E bus within the affected train occurs. Following attainment of required voltage and frequency, the EDG automatically connects to its respective bus, and the accident loads are sequenced onto the bus.

18. When running in a test mode, an EDG is capable of responding to an automatic start signal.

19. Each Class 1E EDG is designed and sized to supply power to its train's safety-related loads after a LOOP or a LOOP concurrent with LOCA conditions.

20. When the Class 1E EDG is started by an ESF actuation signal, all Class 1E EDG protection systems, except for overspeed and generator differential current, are automatically bypassed.

21. The heat exchangers of the EDG cooling water system have the capacity to transfer heat from the diesel engine to the component cooling water system for maintaining the temperature of the diesel engine within an optimum operating range.

22. Each combustion air intake and exhaust system of the EDG is capable of supplying combustion air to the EDG and disposing of EDG exhaust gases during operation at 110% of nameplate rating.

23. The EDG system safety-related pumps are functionally designed and qualified to perform their safety-related function under the full range of fluid flow, differential pressure, electrical, and temperature conditions up to and including design basis accident conditions.

24. The EDG system safety-related valves are functionally designed and qualified to perform their safety-related function under the full range of fluid flow, differential pressure, electrical, and temperature conditions up to and including design basis accident conditions.

2.6.2.2 Inspection, Test, Analyses, and Acceptance Criteria

Table 2.6.2-3 specifies the inspections, tests, analyses, and associated acceptance criteria for the EDG system.

Table 2.6.2-1 (1 of 2)

Emergency Diesel Generator System Piping List

Piping Name	Location	ASME Section III Class	Seismic Category
EDG fuel oil transfer pump suction lines from EDG fuel oil storage tank to EDG fuel oil transfer pumps	EDG/Aux. Building	3	I
EDG fuel oil transfer pump discharge lines up to EDG fuel oil day tank	EDG/Aux. Building	3	I
EDG fuel oil day tanks outlet lines up to EDG	EDG/Aux. Building	3	I
EDG Cooling water system HT water expansion tank outlet lines up to EDG	EDG/Aux. Building	3	I
EDG Cooling water system HT water engine outlet lines up to three-way thermostat valve	EDG/Aux. Building	3	I
EDG Cooling water system HT/CC water heat exchanger outlet lines up to EDG	EDG/Aux. Building	3	I
EDG Cooling water system HT water engine outlet lines up to preheating HT water pump suction line isolation valve	EDG/Aux. Building	3	I
EDG Cooling water system LT water expansion tank outlet lines up to three-way thermostat valve	EDG/Aux. Building	3	I
EDG Cooling water system LT water expansion tank outlet lines up to EDG	EDG/Aux. Building	3	I
EDG Cooling water system CC/LT water heat exchanger inlet lines from lube oil/LT water heat exchanger	EDG/Aux. Building	3	I
EDG Cooling water system CC/LT water heat exchanger outlet lines up to three-way thermostat valve	EDG/Aux. Building	3	I
EDG Cooling water system three-way thermostat valve outlet lines up to lube oil/LT water heat exchanger	EDG/Aux. Building	3	I
EDG Cooling water system lube oil/LT water heat exchanger inlet lines from EDG	EDG/Aux. Building	3	I
EDG starting system air receiver inlet lines from air receiver inlet check valves	EDG/Aux. Building	3	I
EDG starting system starting air receiver discharge lines up to over speed air rack	EDG/Aux. Building	3	I

Table 2.6.2-1 (2 of 2)

Piping Name	Location	ASME Section III Class	Seismic Category
EDG starting system over speed air rack outlet lines up to EDG	EDG/Aux. Building	3	I
EDG starting system over speed air receiver inlet lines from starting air receiver	EDG/Aux. Building	3	I
EDG starting system starting air receiver discharge lines up to air starting valve	EDG/Aux. Building	3	I
EDG lubrication system lube oil/LT water heat exchanger inlet lines from EDG	EDG/Aux. Building	3	I
EDG lubrication system lube oil/LT water heat exchanger outlet lines up to three-way thermostat valve	EDG/Aux. Building	3	I
EDG lubrication system three-way thermostat valve outlet lines up to EDG	EDG/Aux. Building	3	I
Lube oil/Preheating HT water heat exchanger outlet lines from check valve up to three-way thermostat valve	EDG/Aux. Building	3	I
Prelube oil engine inlet line from check valve	EDG/Aux. Building	3	I
Prelube oil engine outlet line up to prelube oil pump inlet isolation valve	EDG/Aux. Building	3	I
EDG combustion air intake and exhaust system piping	EDG/Aux. Building	N/A	I

Table 2.6.2-2 (1 of 3)

Emergency Diesel Generator System Components List

Component Name	Item No. (1)	Location (1)	ASME Section III Class	Seismic Category	Class 1E/ Harsh Envir. Qual.	Display/ Control at MCR	Display/ Control at RSR	Active Safety Function	Position at Loss of Motive Power
EDG Engines and Generators	DG-DG01 A/B/C/D	EDG/Aux. Building	3	I	Yes/No	Yes/Yes	Yes/Yes	Start	-
EDG fuel oil storage tanks	DO-TK01 A/B/C/D	EDG/Aux. Building	3	I	-/No	No/No	No/No	-	-
EDG fuel oil transfer pumps 01	DO-PP01 A/B/C/D	EDG/Aux. Building	3	I	Yes/No	No/No	No/No	Start	-
EDG fuel oil transfer pumps 02	DO-PP02 A/B/C/D	EDG/Aux. Building	3	I	Yes/No	No/No	No/No	Start	-
EDG fuel oil feed pumps	DO-PP22 A/B/C/D	EDG/Aux. Building	3	I	Yes/No	No/No	No/No	Start	-
EDG fuel oil day tanks	DO-TK02 A/B/C/D	EDG/Aux. Building	3	I	-/No	No/No	No/No	-	-
Fuel oil storage tank fill valves	DO-GV1001 A/B/C/D	EDG/Aux. Building	3	I	-/No	No/No	No/No	Open/Close	-
EDG fuel oil transfer pump discharge line check valves	DO-CV-1005 A/B/C/D DO-CV-1007 A/B/C/D	EDG/Aux. Building	3	I	-/No	No/No	No/No	-	-
HT water expansion tanks	DG-TK01 A/B/C/D	EDG/Aux. Building	3	I	-/No	No/No	No/No	-	-
HT/CC water heat exchangers	DG-HE03 A/B/C/D	EDG/Aux. Building	3	I	-/No	No/No	No/No	-	-
HT water thermostat valves	DG-3W-4217 A/B/C/D	EDG/Aux. Building	3	I	-/No	No/No	No/No	Open/Close	-
Preheating HT water pump inlet isolation valves	DG-GV-4230 A/B/C/D	EDG/Aux. Building	3	I	-/No	No/No	No/No	Open/Close	Close

Table 2.6.2-2 (2 of 3)

Component Name	Item No. (1)	Location (1)	ASME Section III Class	Seismic Category	Class 1E/ Harsh Envir. Qual.	Display/ Control at MCR	Display/ Control at RSR	Active Safety Function	Position at Loss of Motive Power
HT water inlet isolation valves	DG-CK-4231 A/B/C/D	EDG/Aux. Building	3	I	-/No	No/No	No/No	-	-
LT water expansion tanks	DG-TK10 A/B/C/D	EDG/Aux. Building	3	I	-/No	No/No	No/No	-	-
LT/CC water heat exchangers	DG-HE02 A/B/C/D	EDG/Aux. Building	3	I	-/No	No/No	No/No	-	-
LT water thermostat valves	DG-3W-4250 A/B/C/D	EDG/Aux. Building	3	I	-/No	No/No	No/No	Open/Close	-
Lube oil/LT water heat exchangers	DG-HE30 A/B/C/D	EDG/Aux. Building	3	I	-/No	No/No	No/No	-	-
Lube oil/LT water heat exchanger thermostat valves	DG-3W-4114 A/B/C/D	EDG/Aux. Building	3	I	-/No	No/No	No/No	Open/Close	-
Starting Air receiver inlet check valves	DG-CV-4022 A/B/C/D DG-CV-4030 A/B/C/D	EDG/Aux. Building	3	I	-/No	No/No	No/No	-	-
Starting air receivers	DG-TK40 A/B/C/D DG-TK41 A/B/C/D	EDG/Aux. Building	3	I	-/No	No/No	No/No	-	-
Starting Air receiver relief valves	DG-RV-5023 A/B/C/D DG-RV-5031 A/B/C/D	EDG/Aux. Building	3	I	-/No	No/No	No/No	Open	-
Starting Air receiver discharge line isolation valves	DG-GV-4048 A/B/C/D DG-GV-4049 A/B/C/D	EDG/Aux. Building	3	I	-/No	No/No	No/No	Open/Close	-
Overspeed air receiver inlet check valves	DG-CV-4316 A/B/C/D	EDG/Aux. Building	3	I	-/No	No/No	No/No	-	-

Table 2.6.2-2 (3 of 3)

Component Name	Item No. (1)	Location (1)	ASME Section Class	Seismic Category	Class 1E/Qual. for Harsh Envir.	Display/ Control at MCR	Display/ Control at RSR	Active Safety Function	Position at Loss of Motive Power
Overspeed air receivers	DG-TK42 A/B/C/D	EDG/Aux. Building	3	I	-/No	No/No	No/No	- (2)	-
Overspeed air receiver relief valves	DG-RV-4041 A/B/C/D	EDG/Aux. Building	3	I	-/No	No/No	No/No	Open	-
Air intake filters	DG-FT50 A/B/C/D	EDG/Aux. Building	N/A	I	-/No	No/No	No/No	-	-
Air intake silencers	DG-SL01 A/B/C/D	EDG/Aux. Building	N/A	I	-/No	No/No	No/No	-	-
Air exhaust silencers	DG-SL03 A/B/C/D	EDG/Aux. Building	N/A	I	-/No	No/No	No/No	-	-
Prelube oil pump inlet isolation valves	DG-GV-4232 A/B/C/D	EDG/Aux. Building	3	I	-/No	No/No	No/No	Open/Close	Close
Prelube oil engine inlet check valves	DG-CV-4109 A/B/C/D	EDG/Aux. Building	3	I	-/No	No/No	No/No	-	-
Lube oil/Preheating HT water heat exchanger outlet check valves	DG-CV-4111 A/B/C/D	EDG/Aux. Building	3	I	-/No	No/No	No/No	-	-

(1) Train A and B are located in EDG building.
Train C and D are located in Auxiliary building.
(2) Dash(-) indicates not applicable.

Table 2.6.2-3 (1 of 10)

Emergency Diesel Generator System ITAAC

Design Commitment	Inspections, Tests, Analyses	Acceptance Criteria
1. The functional arrangement of the EDG system is as described in the Design Description of Subsection 2.6.2.1 and in Tables 2.6.2-1 and 2.6.2-2.	1. Inspection of the as-built EDG system will be performed.	1. The as-built EDG system conforms with the functional arrangement described in the Design Description of Subsection 2.6.2.1 and in Tables 2.6.2-1 and 2.6.2-2.
2.a The ASME Code components identified in Table 2.6.2-2 are designed and constructed in accordance with ASME Section III requirements.	2.a Inspection of the as-built ASME Code components identified in Table 2.6.2-2 will be performed and documented in the ASME data report(s).	2.a The ASME Section III data report(s) exist and conclude that the as-built ASME Code components identified in Table 2.6.2-2 are designed and constructed in accordance with ASME Section III requirements.
2.b The ASME Code piping, including supports, identified in Table 2.6.2-1 is designed and constructed in accordance with ASME Section III requirements.	2.b Inspection of the as-built ASME Code piping, including supports, identified in Table 2.6.2-1 will be performed and documented in the ASME data report(s).	2.b The ASME Section III data report(s) exist and conclude that the as-built ASME Code piping, including supports, identified in Table 2.6.2-1 is designed and constructed in accordance with ASME Section III requirements.
3.a Pressure boundary welds in ASME Code components identified in Table 2.6.2-2 meet ASME Section III requirements.	3.a Inspection of the as-built pressure boundary welds in ASME Code components identified in Table 2.6.2-2 will be performed in accordance with the ASME Section III.	3.a A report exists and concludes that the ASME Section III requirements are met for non-destructive examination of the as-built pressure boundary welds in ASME Code components identified in Table 2.6.2-2.
3.b Pressure boundary welds in ASME Code piping identified in Table 2.6.2-1 meet ASME Section III requirements.	3.b Inspection of the as-built pressure boundary welds in ASME Code piping identified in Table 2.6.2-1 will be performed in accordance with the ASME Section III.	3.b A report exists and concludes that the ASME Section III requirements are met for non-destructive examination of the as-built pressure boundary welds in ASME Code piping identified in Table 2.6.2-1.

Table 2.6.2-3 (2 of 10)

Design Commitment	Inspections, Tests, Analyses	Acceptance Criteria
4.a The ASME Code components identified in Table 2.6.2-2 retain their pressure boundary integrity at their design pressure.	4.a A hydrostatic test will be performed on the as-built ASME Code components identified in Table 2.6.2-2 required to be hydrostatically tested by the ASME Section III.	4.a A report exists and concludes that the results of the hydrostatic test of the as-built ASME Code components identified in Table 2.6.2-2 conform with ASME Section III requirements.
4.b The ASME Code piping identified in Table 2.6.2-1 retains its pressure boundary integrity at its design pressure.	4.b A hydrostatic test will be performed on the as-built ASME Code piping identified in Table 2.6.2-1 required to be hydrostatically tested by the ASME Section III.	4.b A report exists and concludes that the results of the hydrostatic test of the as-built ASME Code piping identified in Table 2.6.2-1conform with ASME Section III requirements.
5.a The seismic Category I diesel engines and generators, including the supports and anchorages, withstand seismic design basis loads without loss of safety function.	5.a.i Inspections will be performed to verify that the as-built seismic Category I diesel engines and generators are located in the seismic Category I structures.	5.a.i The as-built four seismic Category I diesel engines and generators are located in the seismic Category I structures.
	5.a.ii Qualification of the four seismic Category I diesel engines and generators will be performed under all expected environmental condition.	5.a.ii A qualification report exists and concludes that the four seismic Category I diesel engines and generators withstand seismic design basis loads without loss of safety function.
	5.a.iii Inspections will be performed to verify that the as-built seismic Category I diesel engines and generators, including the supports and anchorages, are seismically bounded by the tested or analyzed conditions.	5.a.iii A report exists and concludes that the as-built seismic Category I diesel engines and generators, including the supports and anchorages, are seismically bounded by the tested or analyzed conditions.

Table 2.6.2-3 (3 of 10)

Design Commitment	Inspections, Tests, Analyses	Acceptance Criteria
5.b The seismic Category I components identified in Table 2.6. 2-2, including the supports and anchorages, withstand seismic design basis loads without loss of safety function.	5.b.i Inspections will be performed to verify that the as-built seismic Category I components are located in the seismic Category I structure.	5.b.i The as-built seismic Category I components identified in Table 2.6.2-2 are located in the seismic Category I structure.
	5.b.ii Type tests, analyses, or a combination of type tests and analyses of seismic Category I components will be performed.	5.b.ii A report exists and concludes that the as-built seismic Category I components identified in Table 2.6.2-2 withstand seismic design basis loads without loss of safety function.
	5.b.iii Inspections will be performed to verify that the as-built seismic Category I components, including the supports and anchorages, are seismically bounded by the tested or analyzed conditions.	5.b.iii A report exists and concludes that the as-built seismic Category I identified in Table 2.6.2-2, including the supports and anchorages, are seismically bounded by the tested or analyzed conditions.
5.c The seismic Category I piping, including supports, identified in Table 2.6.2-1 withstand seismic design basis loads without loss of safety function.	5.c.i Inspections will be performed to verify that the as-built seismic Category I piping, including supports, is located in the seismic Category I structure(s).	5.c.i The as-built seismic Category I piping, including supports, identified in Table 2.6.2-1 is located in the seismic Category I structure(s).
	5.c.ii Inspection and analysis of seismic Category I piping, including supports, identified in Table 2.6.2-1 will be performed.	5.c.ii A report exists and concludes that the as-built seismic Category I piping, including supports, identified in Table 2.6.2-1 withstand seismic design basis loads without loss of safety function.
6.a Controls exist in the MCR and EDG room to start and stop each EDG and to synchronize each EDG to its respective Class 1E bus.	6.a Tests will be performed using the EDG controls in the MCR and EDG room to start and stop each EDG and to synchronize each EDG to its respective Class 1E bus.	6.a Controls in the as-built MCR and EDG room start and stop each EDG and synchronize each EDG to its respective Class 1E bus.

Table 2.6.2-3 (4 of 10)

Design Commitment		Inspections, Tests, Analyses		Acceptance Criteria	
6.b	Controls exist in the RSR to start and stop each EDG and to synchronize each EDG to its respective Class 1E bus.	6.b	Tests will be performed using the EDG controls in the RSR to start and stop each EDG and to synchronize each EDG to its respective Class 1E bus.	6.b	Controls in the as-built RSR start and stop each EDG and synchronize each EDG to its respective Class 1E bus.
6.c	Displays and alarms exist and are retrievable in the MCR as defined in Table 2.6.2-2.	6.c	Inspections of the as-built displays and alarms in the MCR will be performed.	6.c	Displays and alarms exist and are retrieved in the as-built MCR as defined in Table 2.6.2-2.
6.d	Displays and alarms exist and are retrievable in the RSR as defined in Table 2.6.2-2.	6.d	Inspections of the as-built displays and alarms in the RSR will be performed.	6.d	Displays and alarms exist and are retrieved in the as-built RSR as defined in Table 2.6.2-2.
7.	Each mechanical division of EDG and its support systems (A, B, C & D) is physically separated from the other divisions.	7.	Inspection of the as-built mechanical divisions will be performed.	7.	Each mechanical division of the EDG is physically separated by a divisional wall that is a 3-hours rated fire barrier.
8.a	Each diesel fuel oil transfer pump is capable of transferring oil from the diesel fuel oil storage tank to its corresponding day tank at sufficient pressure and flow to cover the maximum demand at EDG continuous rated load while simultaneously increasing day tank level.	8.a.i	Analysis will be performed to determine the required fuel oil transfer pump flow rate to support the maximum demand of the EDG at continuous rated load while simultaneously increasing day tank level.	8.a.i	A report exists and concludes that each fuel oil transfer pump is sized to transfer fuel oil from the fuel oil storage tank to its as- built corresponding day tank, at a flow rate to support the maximum demand of the Class 1E EDG at continuous rated load while simultaneously increasing day tank level.
		8.a.ii	Test of each diesel fuel oil transfer pump will be performed to verify that the fuel oil transfer pump flow rate bounds the analysis.	8.a.ii	A report exists and concludes that each diesel fuel oil transfer pump flow rate bounds the analysis.

Table 2.6.2-3 (5 of 10)

Design Commitment		Inspections, Tests, Analyses		Acceptance Criteria	
8.b	The diesel fuel oil transfer pumps have sufficient net positive suction head (NPSH).	8.b	Test to measure the as-built diesel fuel oil transfer pump suction pressure will be performed. Inspection and analyses to determine NPSH available to each pump will be performed based on test data and as-built data.	8.b	A report exists and concludes that as-built calculated NPSH available exceeds each diesel fuel oil transfer pump's NPSH required.
9.	Each EDG has fuel storage capacity to provide fuel to its EDG for a period of seven days with the EDG supplying the power requirements for the most limiting design basis event.	9.a	Analyses will be performed to determine fuel oil storage capacities and EDG fuel consumption.	9.a	A report exists and concludes that each fuel oil storage capacity is sufficient to operate the EDG for seven days with the EDG supplying power during the most limiting design basis event.
		9.b	Inspection will be performed to verify that each as-built fuel oil storage tank's capacity bounds the analysis.	9.b	Each as-built fuel oil storage tank's capacity bounds the analysis.
10.	Each day tank provides fuel oil for at least 60 minutes plus a minimum additional margin of 10 percent at EDG rated load.	10.a	Analyses will be performed to determine day tank capacities and EDG fuel consumption.	10.a	A report exists and concludes that each day tank's capacity is sufficient to provide fuel oil for at least 60 minutes plus a minimum additional margin of 10 percent at EDG rated load.
		10.b	Inspection will be performed to verify that each as-built day tank capacity bounds the analyses.	10.b	Each as-built day tank's capacity bounds the analyses.
11.	One transfer pump in each train is designed to automatically supply diesel fuel oil from the storage tank to the day tank prior to actuation of low level alarm and stops automatically on a fuel oil day tank high-level signal.	11.	Tests will be performed on the as-built fuel oil transfer pump in each train by providing a test signal of a simulated fuel oil day tank level in only one train at a time.	11.	The as-built transfer pump in each train starts automatically to supply diesel fuel oil from the storage tank to the day tank prior to actuation of low level alarm and stops automatically on a fuel oil day tank high-level signal.

Table 2.6.2-3 (6 of 10)

Design Commitment	Inspections, Tests, Analyses	Acceptance Criteria
12. Each lube oil makeup tank provides lube oil to its respective EDG for seven continuous days of EDG full power rated operation.	12.a Analyses will be performed to determine lube oil makeup tank capacities and EDG lube oil consumption.	12.a A report exists and concludes that each lube oil makeup tank provides lube oil to its respective EDG for seven continuous days of EDG full power rated operation.
	12.b Inspection will be performed to verify that each as-built lube oil makeup tank capacity bounds the analysis.	12.b Each as-built lube oil makeup tank's capacity bounds the analysis.
13. The starting air system receiver tanks of each EDG have a combined air capacity for five starts of the EDG without replenishing air to the receiver tanks.	13. Tests will be performed with the EDGs and their air start systems.	13. Each EDG is started five times without replenishing air to the receiver tanks.
14. The air intakes for EDG combustion are separated from the EDG exhaust ducts to prevent the degradation of the EDG power output due to the recirculation of the exhaust gases.	14. Inspection and analysis of the as-built EDG air intakes and air exhaust will be performed.	14. The air intake for each as-built EDG is located at a lower elevation than the exhaust for each as-built EDG and the intake is from the downward direction while the exhaust is discharged in an upward direction.
15. A loss of power to a Class 1E medium voltage safety bus automatically starts its respective EDG and load sheds the Class 1E bus within the affected train. Following attainment of required voltage and frequency, the EDG automatically connects to its respective train bus. After the EDG connects to its respective bus, the non-accident loads are automatically sequenced onto the bus.	15. Test for the actuation and connection of each EDG will be performed using a signal that simulates a loss of power.	15. The as-built EDGs automatically start on receiving a LOOP signal, attain the rated voltage and frequency within 17 seconds, automatically connect to their respective train bus, and sequence their non-accident loads onto their train bus.

Table 2.6.2-3 (7 of 10)

Design Commitment	Inspections, Tests, Analyses	Acceptance Criteria
16. The Class 1E auxiliary power for EDG support systems is supplied from the same train, respectively.	16.a Inspection of each as-built Class 1E EDG support system will be performed.	16.a A report exists and concludes that auxiliary power for each as-built Class 1E EDG support system is provided by the same train of the Class 1E power system.
	16.b Test of each as-built Class 1E EDG support system will be performed to verify that auxiliary power is provided by the same train of the Class 1E power system.	16.b A test report exists and concludes that the auxiliary power for each as-built Class 1E EDG support system is provided by the same train of the Class 1E power system.
17. For a loss of power to a Class 1E medium voltage safety bus concurrent with a design basis event condition (SIAS/CSAS/ AFAS), each EDG automatically starts and load shedding of the Class 1E bus within the affected train occurs. Following attainment of required voltage and frequency, the EDG automatically connects to its respective bus and the accident loads are sequenced onto the bus.	17. Test of the as-built EDG systems will be performed by providing simulated SIAS/CSAS/AFAS and loss of power signals.	17. When SIAS/CSAS/AFAS and loss of power signals exist, the EDG automatically starts and load shedding of the Class 1E bus within the affected train occurs. Following attainment of required voltage and frequency within 17 seconds, the EDG automatically connects to its train bus. The SI, CS, and AF loads are sequenced to the buses by load sequencer.
18. When running in a test mode, an EDG is capable of responding to an automatic start signal.	18. Tests will be performed with each EDG in a test mode configuration. An automatic start signal will be simulated.	18. When running in a test mode, each EDG resets to its automatic control mode upon receipt of a simulated automatic start signal.

Table 2.6.2-3 (8 of 10)

Design Commitment	Inspections, Tests, Analyses	Acceptance Criteria
19. Each Class 1E EDG is designed and sized to supply power to its train's safety-related loads after a LOOP or a LOOP concurrent with LOCA conditions.	19.a Analyses will be performed to verify that each Class 1E EDG is capable of supplying power to its train safety-related loads after a LOOP or a LOOP concurrent with LOCA conditions.	19.a A report exists and concludes that each Class 1E EDG is designed and sized to supply power to its train's safety-related loads after a LOOP or a LOOP concurrent with LOCA conditions.
	19.b Inspections will be performed to verify that the rating of each as-built Class 1E EDG is in accordance with the size requirements of the analysis.	19.b The rating of each Class 1E EDG bounds the size requirements of the analysis.
	19.c Test will be performed to verify that the Class 1E EDG is capable of supplying rated power at proper voltage and frequency.	19.c A report exists and concludes that each Class 1E EDG is capable of supplying rated power at proper voltage and frequency.
20. When the Class 1E EDG is started by an ESF actuation signal, all Class 1E EDG protection systems, except for overspeed and generator differential current, are automatically bypassed.	20. Tests will be performed to verify the as-built Class 1E EDG protection systems.	20. A report exists and concludes that the as-built Class 1E EDG protection systems, except for overspeed and generator differential current, are automatically bypassed when the Class 1E EDG is started by an ESF actuation signal.
21. The heat exchangers of the EDG cooling water system have the capacity to transfer heat from the diesel engine to the component cooling water system for maintaining the temperature of the diesel engine within an optimum operating range.	21. Analysis will be performed to demonstrate the capability of the heat exchangers of the EDG cooling water system to transfer heat from the diesel engine to the component cooling water system for maintaining the temperature of the diesel engine within an optimum operating range.	21. A report exists and concludes that the heat exchangers of the EDG cooling water system have the capacity to transfer heat from the diesel engine to the component cooling water system for maintaining the temperature of the diesel engine within an optimum operating range.

Table 2.6.2-3 (9 of 10)

Design Commitment	Inspections, Tests, Analyses	Acceptance Criteria
22. Each combustion air intake and exhaust system of the EDG is capable of supplying combustion air to the EDG and disposing of EDG exhaust gases during operation at 110% of nameplate rating.	22. A test of each as-built EDG at 110% of nameplate rating will be performed.	22. Each combustion air intake and exhaust system of the EDG is capable of supplying combustion air to the EDG and disposing of EDG exhaust gases during operation at 110% of nameplate rating.
23. The EDG system safety-related pumps are functionally designed and qualified to perform their safety-related function under the full range of fluid flow, differential pressure, electrical, and temperature conditions up to and including design basis accident conditions.	23. A type test or a combination of type test and analysis will be performed of the EDG system safety-related pumps.	23. A Functional Qualification Report performed in conformance to ASME QME-1, as accepted in Regulatory Guide 1.100, exists and concludes that the EDG system safety-related pumps listed in Table 2.6.2-2 are functionally designed and qualified to perform their safety-related function under the full range of fluid flow, differential pressure, electrical, and temperature conditions up to and including design basis accident conditions.

Table 2.6.2-3 (10 of 10)

Design Commitment	Inspections, Tests, Analyses	Acceptance Criteria
24. The EDG system safety-related valves are functionally designed and qualified to perform their safety-related function under the full range of fluid flow, differential pressure, electrical, and temperature conditions up to and including design basis accident conditions.	24.a A type test or a combination of type test and analysis will be performed of the EDG system safety-related valves.	24.a A Functional Qualification Report performed in conformance to ASME QME-1-2007, as accepted in Regulatory Guide 1.100 Revision 3, exists and concludes that the EDG system safety-related valves listed in Table 2.6.2-2 are functionally designed and qualified to perform their safety-related function under the full range of fluid flow, differential pressure, electrical, and temperature conditions up to and including design basis accident conditions.
	24.b A diagnostic stroke test and analysis will be performed of the EDG system safety-related valves under preoperational temperature, differential pressure, and flow conditions.	24.b Each EDG system safety-related valve listed in Table 2.6.2-2 strokes fully open and fully closed by remote operation (or manual operation if a manually operated valve) under preoperational temperature, differential pressure, and flow conditions. Analysis based on sufficient diagnostic data demonstrates that the valves will perform at their design basis capability as established by the type test performed in accordance with 24.a.
	24.c Tests of the as-built check valves will be performed under preoperational test pressure, temperature, and fluid flow conditions.	24.c Each as-built check valve changes position as indicated in Table 2.6.2-2 under preoperational test conditions.

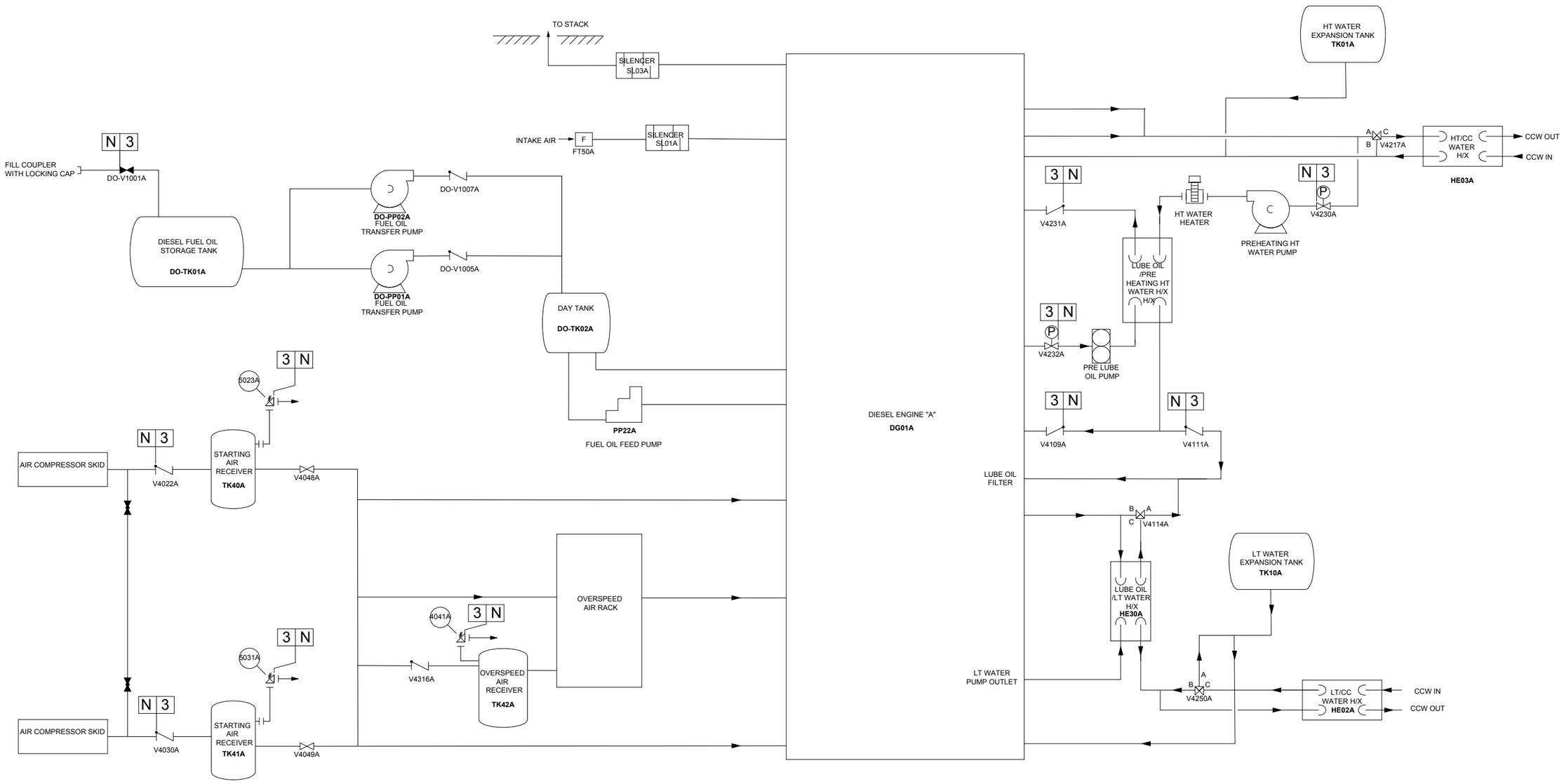

TRAIN A IS INDICATED AS REPRESENTATIVE OF TRAINS B, C, AND D.

Figure 2.6.2-1 Emergency Diesel Generator Mechanical System

2.6.3 DC Power System

2.6.3.1 Design Description

The Class 1E 125 Vdc system consists of four independent subsystems, trains A, B, C, and D, each corresponding to one of the four reactor protection instrumentation channels A, B, C, and D. The non-Class 1E dc power system is also comprised of two separate subsystems, divisions I and II. Each Class 1E dc power system is provided with its own battery, two battery chargers (normal and standby), a dc control center, and dc distribution panels. Each non-Class 1E dc power system is provided with its own battery, a battery charger with or without a standby battery charger, a dc control center, and dc distribution panels. The Class 1E dc power system supplies reliable continuous power to the plant safety system dc loads and the Class 1E I&C system.

The Class 1E 125 Vdc batteries are located in their separate respective channelized rooms within the auxiliary building.

The Class 1E dc power system is designed as follows:

1. The functional arrangement of the Class 1E dc power system is as described in the Design Description of Subsection 2.6.3.1 and as shown in Figure 2.6.3-1.

2. The seismic Category I equipment identified in Table 2.6.3-1, including the supports and anchorages, can withstand seismic design basis loads without loss of safety function.

3. The raceway systems for Class 1E dc power system cables are designed to meet seismic Category I requirements.

4. Class 1E dc power system cables are routed in seismic Category I structures and in their respective raceways.

5. The Class 1E dc power system operating voltage is within the terminal voltage range of the Class 1E equipment.

6. Each Class 1E battery is sized to supply its Design Basic Event (DBE) loads, at the end-of-installed-life, for pertinent required hours without recharging.

7. Each Class 1E battery charger is sized to supply its respective Class 1E steady-state loads while charging its respective Class 1E battery.

8. Class 1E dc power system distribution panels and dc control centers are identified according to their Class 1E trains.

9. Class 1E dc power system cables are identified according to their Class 1E trains.

10.a Independence is provided between each of the four trains of Class 1E dc distribution equipment and circuits.

10.b Independence is provided between Class 1E dc distribution equipment and circuits and non-Class 1E dc distribution equipment and circuits.

10.c Class 1E qualified isolation devices provide independence between Class 1E dc distribution equipment and non-Class 1E dc loads.

11.a Displays and alarms exist and are retrievable in the MCR as defined in Table 2.6.3-2.

11.b Displays and alarms exist and are retrievable in the RSR as defined in Table 2.6.3-2.

12. Each of the four Class 1E dc power trains has a main circuit protection device which has selective coordination with downstream protective devices.

13. The Class 1E batteries of each train are located in a separate room.

14. The Class 1E dc distribution panel, dc control center and battery charger of each train are located in a separate room.

15. The Class 1E dc power system cables are sized to carry required load currents and to provide minimum design basis voltage at load terminals, considering derating due to ambient temperature, cable grouping, and other derating effects as applicable.

16. The Class 1E protective devices (circuit breakers/fuses) in the dc power system are rated to supply their required loads and withstand fault currents for the time required to clear the fault from the power source.

2.6.3.2 Inspection, Test, Analyses, and Acceptance Criteria

Table 2.6.3-3 specifies the inspections, tests, analyses, and associated acceptance criteria for the dc power system.

Table 2.6.3-1

DC Power System Equipment Characteristics

Equipment Name	Seismic Category	Class 1E/Harsh Envir. Qual.
Class 1E 125 Vdc Battery 1A	I	Yes/No
Class 1E 125 Vdc Battery 1B	I	Yes/No
Class 1E 125 Vdc Battery 1C	I	Yes/No
Class 1E 125 Vdc Battery 1D	I	Yes/No
Class 1E 125 Vdc Battery Charger 1A	I	Yes/No
Class 1E 125 Vdc Battery Charger 1B	I	Yes/No
Class 1E 125 Vdc Battery Charger 1C	I	Yes/No
Class 1E 125 Vdc Battery Charger 1D	I	Yes/No
Class 1E 125 Vdc Standby Battery Charger 2A	I	Yes/No
Class 1E 125 Vdc Standby Battery Charger 2B	I	Yes/No
Class 1E 125 Vdc Standby Battery Charger 2C	I	Yes/No
Class 1E 125 Vdc Standby Battery Charger 2D	I	Yes/No
Class 1E 125 Vdc Control Center 1A	I	Yes/No
Class 1E 125 Vdc Control Center 1B	I	Yes/No
Class 1E 125 Vdc Control Center 1C	I	Yes/No
Class 1E 125 Vdc Control Center 1D	I	Yes/No

Table 2.6.3-2

DC Power System Equipment Alarms/Displays and Control Functions

Equipment Name	Alarm/Display at MCR	Alarm/Display at RSR	Control at MCR/RSR
Class 1E 125 Vdc Battery 1A	Yes	Yes	N/A
Class 1E 125 Vdc Battery 1B	Yes	Yes	N/A
Class 1E 125 Vdc Battery 1C	Yes	Yes	N/A
Class 1E 125 Vdc Battery 1D	Yes	Yes	N/A
Class 1E 125 Vdc Battery Charger 1A	Yes	Yes	N/A
Class 1E 125 Vdc Battery Charger 1B	Yes	Yes	N/A
Class 1E 125 Vdc Battery Charger 1C	Yes	Yes	N/A
Class 1E 125 Vdc Battery Charger 1D	Yes	Yes	N/A
Class 1E 125 Vdc Standby Battery Charger 2A	Yes	Yes	N/A
Class 1E 125 Vdc Standby Battery Charger 2B	Yes	Yes	N/A
Class 1E 125 Vdc Standby Battery Charger 2C	Yes	Yes	N/A
Class 1E 125 Vdc Standby Battery Charger 1D	Yes	Yes	N/A
Class 1E 125 Vdc Control Center 1A	Yes	Yes	N/A
Class 1E 125 Vdc Control Center 1B	Yes	Yes	N/A
Class 1E 125 Vdc Control Center 1C	Yes	Yes	N/A
Class 1E 125 Vdc Control Center 1D	Yes	Yes	N/A

Table 2.6.3-3 (1 of 5)

DC Power System ITAAC

Design Commitment	Inspections, Tests, Analyses	Acceptance Criteria
1. The functional arrangement of the Class 1E dc power system is as described in the Design Description of Subsection 2.6.3.1 and as shown in Figure 2.6.3-1.	1. Inspection of the as-built Class 1E dc power system will be performed.	1. The as-built Class 1E dc power system conforms with the functional arrangement as described in the Design Description of Subsection 2.6.3.1 and as shown in Figure 2.6.3-1.
2. The seismic Category I equipment identified in Table 2.6.3-1, including the supports and anchorages, can withstand seismic design basis loads without loss of safety function.	2.a Inspections will be performed to verify that the as-built seismic Category I equipment are located in seismic Category I structures.	2.a The as-built seismic Category I equipment identified in Table 2.6.3-1 are located in seismic Category I structures.
	2.b Type tests, analyses, or a combination of type tests and analyses of seismic Category I equipment will be performed.	2.b A report exists and concludes that the seismic Category I equipment identified in Table 2.6.3-1 can withstand seismic design basis loads without loss of safety function.
	2.c Inspections will be performed to verify that the as-built seismic Category I equipment, including the supports and anchorages, are seismically bounded by the tested or analyzed conditions.	2.c A report exists and concludes that the as-built seismic Category I equipment identified in Table 2.6.3-1,including the supports and anchorages, are seismically bounded by the tested or analyzed conditions.
3. The raceway systems for Class 1E dc power system cables are designed to meet seismic Category I requirements.	3. Inspections and analyses will be performed to verify that the as-built raceway systems for Class 1E dc power system cables are supported by a seismic Category I designed support system.	3. A report exists and concludes that the as-built raceway systems for Class 1E dc power system cables are supported by a seismic Category I designed support system.
4. Class 1E dc power system cables are routed in seismic Category I structures and in their respective raceways.	4.a Inspection of the as-built Class 1E dc power system cables and raceways will be performed.	4.a A report exists and concludes that the as-built Class 1E dc power system cables are routed in seismic Category I structures and in their respective raceways.

Table 2.6.3-3 (2 of 5)

Design Commitment	Inspections, Tests, Analyses	Acceptance Criteria
4. (cont.)	4.b Analysis of the as-built raceway systems for Class 1E dc power system cables will be performed using analytical assumptions which bound the seismic design basis requirements.	4.b A report exists and concludes that the as-built raceway systems for Class 1E dc power system cables meet seismic Category I requirements.
	4.c Inspections will be performed to verify that the as-built raceway systems for Class 1E dc power system cables are seismically bounded by the analyzed conditions.	4.c A report exists and concludes that the as-built raceway systems for Class 1E dc power system cables are seismically bounded by the analyzed conditions.
5. The Class 1E dc power system operating voltage is within the terminal voltage range of the Class 1E equipment.	5. Analyses will be performed of the Class 1E dc power system operating voltage.	5. A report exists and concludes that the Class 1E dc power system operating voltage is within the terminal voltage range of the Class 1E equipment.
6. Each Class 1E battery is sized to supply its Design Basic Event (DBE) loads, at the end-of-installed-life, for pertinent required hours without recharging.	6.a. Analysis of each as-built Class 1E battery will be performed to verify that the Class 1E battery has the capacity to carry its DBE duty cycle.	6.a. A report exists and concludes that the capacity of each as-built Class 1E battery meets the analyzed battery design duty cycle capacity.
	6.b A capacity test of each as-built Class 1E battery will be performed.	6.b The capacity of each as-built Class 1E battery is greater than or equal to the analyzed battery design duty cycle capacity determined in 6.a.
7. Each Class 1E battery charger is sized to supply its respective Class 1E steady-state loads while charging its respective Class 1E battery.	7.a. Analysis of each Class 1E battery charger will be performed to verify that it has the capacity to supply its respective Class 1E normal steady-state loads while charging its respective Class 1E battery	7.a. A report exists and concludes that the capacity of each Class 1E battery charger meets its respective Class 1E normal steady-state loads while charging its respective Class 1E battery.

Table 2.6.3-3 (3 of 5)

Design Commitment	Inspections, Tests, Analyses	Acceptance Criteria
7. (cont.)	7.b A test of each as-built Class 1E battery charger will be performed.	7.b Each as-built Class 1E battery charger supplies greater than or equal to the analyzed load determined in 7.a.
8. Class 1E dc power system distribution panels and dc control centers are identified according to their Class 1E trains.	8. Inspection of the as-built Class 1E dc distribution panels and dc control centers will be performed.	8. The as-built Class 1E dc power system distribution panels and dc control centers are identified according to their Class 1E trains.
9. Class 1E dc power system cables are identified according to their Class 1E trains.	9. Inspection of the as-built Class 1E dc power system cables will be performed.	9. The as-built Class 1E dc power system cables are identified according to their Class 1E trains.
10.a Independence is provided between each of the four trains of Class 1E dc distribution equipment and circuits.	10.a Tests will be performed on the as-built Class 1E dc distribution equipment and circuits by providing a test signal in only one train at a time.	10.a The test signal is present in the as-built Class 1E train under test.
10.b Independence is provided between Class 1E dc distribution equipment and circuits and non-Class 1E dc distribution equipment and circuits.	10.b Tests will be performed on the as-built Class 1E and non-Class 1E dc distribution equipment and circuits by providing a test signal in only one train for Class 1E or one division for non-Class 1E at a time.	10.b The test signal is present in the as-built Class 1E train or non-Class 1E division under test.
10.c Class 1E qualified isolation devices provide independence between Class 1E dc distribution equipment and non-Class 1E dc loads.	10.c.i Type tests, analyses, or a combination of type tests and analyses will be performed to verify the qualification of isolation devices.	10.c.i A report exists and concludes that the Class 1E dc distribution equipment is isolated from as-built non-Class 1E dc loads by Class 1E qualified isolation devices in accordance with NRC RG 1.75.
	10.c.ii Inspection of the as-built Class 1E dc distribution equipment will be performed.	10.c.ii Class 1E qualified isolation devices are provided between the as-built Class 1E dc distribution equipment and non-Class 1E dc loads.

Table 2.6.3-3 (4 of 5)

Design Commitment	Inspections, Tests, Analyses	Acceptance Criteria
11.a Displays and alarms exist and are retrievable in the MCR as defined in Table 2.6.3-2.	11.a Inspections of the as-built displays and alarms in the MCR will be performed.	11.a Displays and alarms exist and are retrieved in the MCR as defined in Table 2.6.3-2.
11.b Displays and alarms exist and are retrievable in the RSR as defined in Table 2.6.3-2.	11.b Inspections of the as-built displays and alarms in the RSR will be performed.	11.b Displays and alarms exist and are retrieved in the RSR as defined in Table 2.6.3-2.
12. Each of the four Class 1E dc power trains has a main circuit protection device which has selective coordination with downstream protective devices.	12.a Analyses will be performed to verify the main circuit protection devices have selective coordination with the downstream protective devices.	12.a A report exists and concludes that each of the four Class 1E dc power trains has a main circuit protection device which has selective coordination with the downstream protective devices.
	12.b Inspection of the as-built main circuit protection devices in the as-built dc control centers will be performed.	12.b The as-built main circuit protection device in each of the four Class 1E dc power trains is the same as that used in the coordination analysis.
13. The Class 1E batteries of each train are located in a separate room.	13. Inspection of the as-built Class 1E batteries will be performed.	13. The as-built Class 1E batteries of each train are located in a separate room.
14. The Class 1E dc distribution panel, dc control center and battery chargers of each train are located in a separate room.	14. Inspection of the as-built Class 1E dc distribution panel, dc control center and battery chargers will be performed.	14. The as-built Class 1E dc distribution panel, dc control center and battery chargers of each train are located in a separate room.

Table 2.6.3-3 (5 of 5)

Design Commitment	Inspections, Tests, Analyses	Acceptance Criteria
15. The Class 1E dc power system cables are sized to carry required load currents and to provide minimum design basis voltage at load terminals, considering derating due to ambient temperature, cable grouping, and other derating effects as applicable.	15.a Analysis will be performed to verify the Class 1E dc power system cables are sized to carry required load currents and to provide minimum design basis voltage at load terminals, considering derating due to ambient, cable grouping, and other derating effects as applicable.	15.a A report exists and concludes that the Class 1E dc power system cables are sized to carry required load currents and to provide minimum design basis voltage at load terminals, considering derating due to ambient temperature, cable grouping, and other derating effects as applicable.
	15.b Inspection will be performed to verify the size of the as-built Class 1E dc power system cables installed bound the minimum size required by the analysis.	15.b The as-built Class 1E dc power system cables are sized to bound the minimum sizes determined by the analysis.
16. The Class 1E protective devices (circuit breakers/fuses) in the dc power system are rated to supply their required loads and withstand fault currents for the time required to clear the fault from the power source.	16.a Analysis will be performed to verify the Class 1E protective devices (circuit breakers/fuses) in the dc power system are rated to supply their required loads and withstand fault currents for the time required to clear the fault from the power source.	16.a A report exists and concludes that the Class 1E protective devices (circuit breakers/fuses) in the dc power system are rated to supply their required loads and withstand fault currents for the time required to clear the fault from the power source.
	16.b Inspection will be performed to verify that the ratings of the as-built Class 1E protective devices (circuit breakers/fuses) in the dc power system bound the size requirements of the analysis.	16.b The ratings of the as-built Class 1E protective devices (circuit breakers/fuses) in the dc power system bound the size requirements of the analysis.

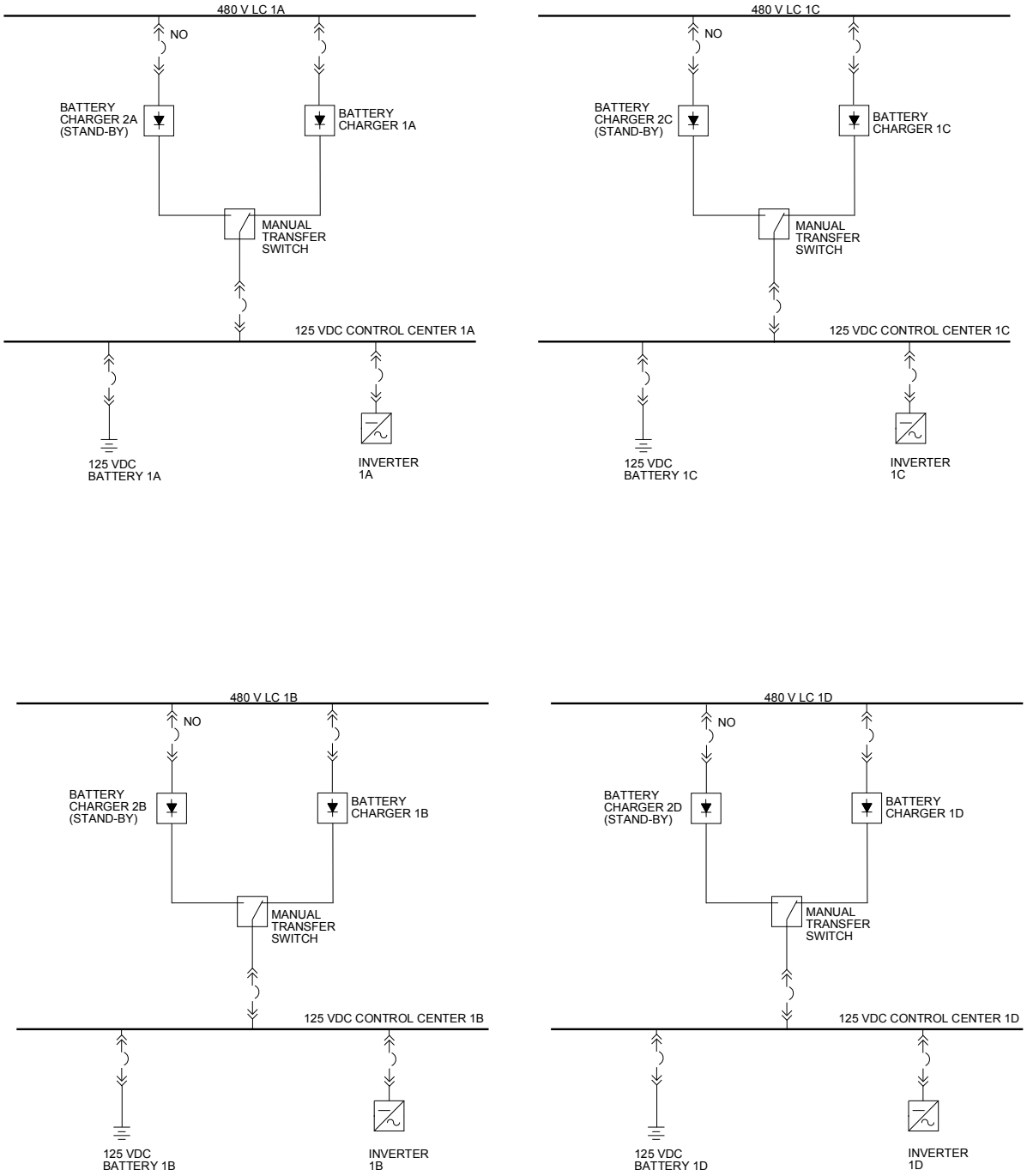

Figure 2.6.3-1 Class 1E DC Power System

2.6.4 Instrumentation and Control Power System

2.6.4.1 Design description

The instrumentation and control (I&C) power system consists of Class 1E and non-Class 1E power systems. The Class 1E 120 Vac I&C power system is separated into four subsystems, trains A, B, C, and D that supply power to the plant protection system channels A, B, C, and D. The Class 1E I&C power system includes four separate and independent 120 Vac power distribution panel, and each system is powered from a 125 Vdc control center via a 125 Vdc/120 Vac static inverter.

The Class 1E I&C power system is designed as follows:

1. The functional arrangement of the I&C power system is as described in the Design Description of Subsection 2.6.4.1 and as shown in Figure 2.6.4-1.

2. The seismic Category I equipment identified in Table 2.6.4-1, including the supports and anchorages, can withstand seismic design basis loads without loss of safety function.

3.a Displays and alarms exist and are retrievable in the MCR as defined in Table 2.6.4-2.

3.b Displays and alarms exist and are retrievable in the RSR as defined in Table 2.6.4-2.

4. When dc input power to the Class 1E inverter power supply unit is lost, input to the Class 1E inverter power supply unit is provided by the regulating transformer without interruption of power supply to the loads.

5. Class 1E I&C power system equipment identified in Table 2.6.4-1 is located in their respective areas.

6. Physical separation and electrical isolation are provided between the Class 1E trains.

7. Physical separation and electrical isolation are provided between Class 1E I&C power system equipment and circuits and non-Class 1E I&C power system equipment and circuits.

8. Class 1E I&C power system equipment and circuits of redundant train are uniquely identified by their train color and character.

9. Class 1E I&C power system cables are routed in seismic Category I structures and in their respective raceways.

10. Class 1E I&C power system equipment and circuits are rated to withstand fault currents for the time required to clear the fault from its power source.

11. The rating of the Class 1E I&C power system circuit breakers and fuses are designed to interrupt the fault currents.

2.6.4.2 Inspections, Tests, Analyses, and Acceptance Criteria

Table 2.6.4-3 specifies the inspections, tests, analyses, and associated acceptance criteria for the I&C power system.

Table 2.6.4-1

Instrument and Control Power System Equipment Characteristics

Equipment Name	Seismic Category	Class 1E/Harsh Envir. Qual.
Class 1E Inverter 1A	I	Yes/No
Class 1E Inverter 1B	I	Yes/No
Class 1E Inverter 1C	I	Yes/No
Class 1E Inverter 1D	I	Yes/No
Class 1E Regulating Transformer 1A	I	Yes/No
Class 1E Regulating Transformer 1B	I	Yes/No
Class 1E Regulating Transformer 1C	I	Yes/No
Class 1E Regulating Transformer 1D	I	Yes/No
Class 1E 120 Vac Distribution Panel (included in Inverter 1A)	I	Yes/No
Class 1E 120 Vac Distribution Panel (included in Inverter 1B)	I	Yes/No
Class 1E 120 Vac Distribution Panel (included in Inverter 1C)	I	Yes/No
Class 1E 120 Vac Distribution Panel (included in Inverter 1D)	I	Yes/No

Table 2.6.4-2

Instrument and Control Power System Equipment
Alarms/Displays and Control Functions

Equipment Name	Alarm/Display at MCR	Alarm/Display at RSR	Control at MCR/RSR
Class 1E Inverter 1A	Yes	Yes	N/A
Class 1E Inverter 1B	Yes	Yes	N/A
Class 1E Inverter 1C	Yes	Yes	N/A
Class 1E Inverter 1D	Yes	Yes	N/A
Class 1E Regulating Transformer 1A	N/A	N/A	N/A
Class 1E Regulating Transformer 1B	N/A	N/A	N/A
Class 1E Regulating Transformer 1C	N/A	N/A	N/A
Class 1E Regulating Transformer 1D	N/A	N/A	N/A
Class 1E 120 Vac Distribution Panel (included in Inverter 1A)	N/A	N/A	N/A
Class 1E 120 Vac Distribution Panel (included in Inverter 1B)	N/A	N/A	N/A
Class 1E 120 Vac Distribution Panel (included in Inverter 1C)	N/A	N/A	N/A
Class 1E 120 Vac Distribution Panel (included in Inverter 1D)	N/A	N/A	N/A

Table 2.6.4-3 (1 of 3)

Instrument and Control Power System ITAAC

Design Commitment	Inspections, Tests, Analyses	Acceptance Criteria
1. The functional arrangement of the I&C power system is as described in the Design Description of Subsection 2.6.4.1 and as shown in Figure 2.6.4-1.	1. Inspection of the as-built I&C power system will be performed.	1. The as-built I&C power system conforms with the functional arrangement as described in the Design Description of Subsection 2.6.4.1 and as shown in Figure 2.6.4-1.
2. The seismic Category I equipment identified in Table 2. 6.4-1, including the supports and anchorages, can withstand seismic design basis loads without loss of safety function.	2.a Inspections will be performed to verify that the as-built seismic Category I equipment are located in the seismic Category I structure.	2.a The as-built seismic Category I equipment identified in Table 2.6.4-1 are located in the seismic Category I structure.
	2.b Type tests, analyses, or a combination of type tests and analyses of seismic Category I equipment will be performed.	2.b A report exists and concludes that the as-built seismic Category I equipment identified in Table 2.6.4-1 can withstand seismic design basis loads without loss of safety function.
	2.c Inspections will be performed to verify that the as-built seismic Category I equipment, including the supports and anchorages, are seismically bounded by the tested or analyzed conditions.	2.c A report exists and concludes that the as-built seismic Category I equipment identified in Table 2.6.4-1, including the supports and anchorages, are seismically bounded by the tested or analyzed conditions.
3.a Displays and alarms exist and are retrievable in the MCR as defined in Table 2.6.4-2.	3.a Inspections of the as-built displays and alarms in the MCR will be performed.	3.a Displays and alarms exist and are retrieved in the MCR as defined in Table 2.6.4-2.
3.b Displays and alarms exist and are retrievable in the RSR as defined in Table 2.6.4-2.	3.b Inspections of the as-built displays and alarms in the RSR will be performed.	3.b Displays and alarms exist and are retrieved in the RSR as defined in Table 2.6.4-2.

Table 2.6.4-3 (2 of 3)

Design Commitment	Inspections, Tests, Analyses	Acceptance Criteria
4. When dc input power to the Class 1E inverter power supply unit is lost, input to the Class 1E inverter power supply unit is provided by the regulating transformer without interruption of power supply to the loads.	4. Tests will be performed to verify that when dc input power to the as-built Class 1E inverter power supply unit is lost, input to the Class 1E inverter power supply unit is provided by the Class 1E regulating transformer without interruption of power supply to the loads.	4. When dc input power to the as-built Class 1E inverter power supply unit is lost, input to the Class 1E inverter power supply unit automatically transfers to regulating transformer without interruption of power supply to the loads.
5. Class 1E I&C power system equipment identified in Table 2.6.4-1 is located in their respective areas.	5. Inspection of the as-built Class 1E I&C power system equipment will be performed.	5. The as-built Class 1E I&C power system equipment identified in Table 2.6.4-1 is located in their respective areas.
6. Physical separation and electrical isolation are provided between the Class 1E trains.	6.a Tests will be performed on the as-built Class 1E I&C power supply equipment and circuits by providing a test signal in only one Class 1E train at a time.	6.a The test signal exists in the as-built Class 1E train under test.
	6.b Inspection of the as-built Class 1E train in the Class 1E I&C power system will be performed.	6.b Physical separation and electrical isolation exist in accordance with NRC RG 1.75 between the Class 1E trains.
7. Physical separation and electrical isolation are provided between Class 1E I&C power system equipment and circuits and non-Class 1E I&C power system equipment and circuits.	7.a Tests will be performed on the as-built Class 1E & non-Class 1E I&C power system equipment and circuits by providing a test signal in only one train for Class 1E or one division for non-Class 1E at a time.	7.a The test signal exists in the as-built Class 1E train or non-Class 1E division under test.
	7b. Inspection of the as-built Class 1E I&C power system train will be performed	7b. Physical separation and electrical isolation exist in accordance with NRC RG 1.75 between the as-built Class 1E I&C power system train and non-Class 1E divisions.

Table 2.6.4-3 (3 of 3)

Design Commitment	Inspections, Tests, Analyses	Acceptance Criteria
8. Class 1E I&C power system equipment and circuits of redundant train are uniquely identified by their train color and character.	8. Inspection of the as-built Class 1E I&C power system equipment and circuits of redundant train will be performed.	8. The as-built Class 1E I&C power system equipment and circuits of redundant train are uniquely identified by their train color and character.
9. Class 1E I&C power system cables are routed in seismic Category I structures and in their respective raceways.	9. Inspection and analyses of the as-built Class 1E I&C power system cables and raceways will be performed.	9. The as-built Class 1E train cables are routed in seismic Category I structures and in their respective raceways.
10. Class 1E I&C power system equipment and circuits are rated to withstand fault currents for the time required to clear the fault from its power source.	10. Analysis for the as-built Class 1E I&C power system equipment and circuits to determine fault currents will be performed.	10. A report exists and concludes that the as-built Class 1E I&C power system equipment and circuits can withstand the analyzed fault currents for the time required.
11. The rating of the Class 1E I&C power system circuit breakers and fuses are designed to interrupt the fault currents.	11.a Analyses will be performed to verify the Class 1E I&C power system breakers and fuses are designed to interrupt the fault currents.	11.a A report exists and concludes that the rating of the Class 1E I&C power system breakers and fuses are designed to interrupt the fault currents.
	11.b Inspections will be performed to verify that the interrupting ratings of as-built Class 1E I&C power system breakers and fuses bound the requirements of the analysis.	11.b The as-built Class 1E I&C power system breakers and fuses have interrupting ratings that bound the requirements of the analysis.

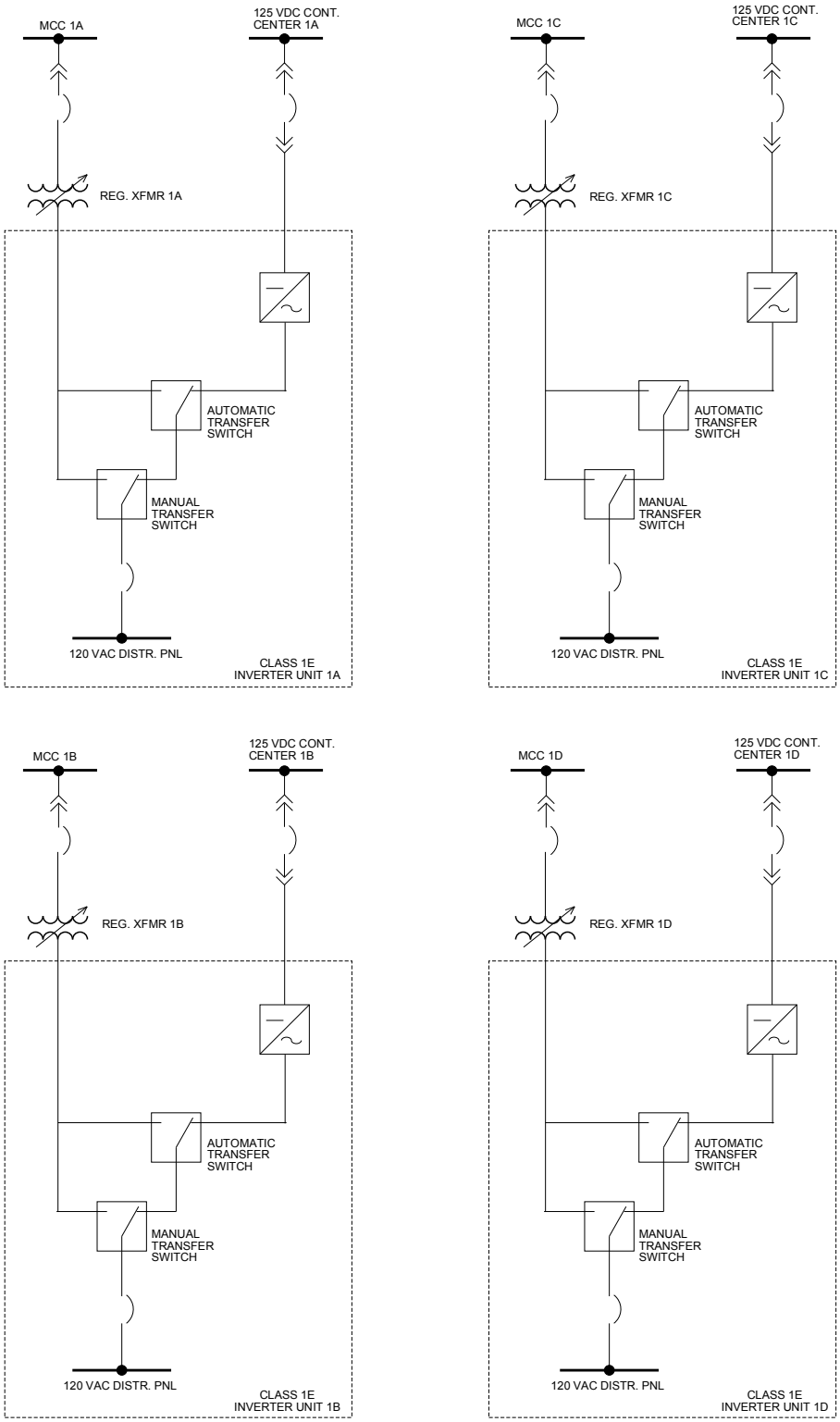

Figure 2.6.4-1 Instrumentation and Control Power System

2.6.5 Containment Electrical Penetration Assemblies

2.6.5.1 Design Description

Containment electrical penetration assemblies (EPAs) are provided for electrical cables passing through the containment. Containment EPAs are classified as seismic Category I.

Containment EPA is designed as follows:

1. The electric power, control, and instrumentation cables pass through the wall of reactor containment building (RCB) via the EPAs.

2. Each EPA, including the supports and anchorages, can withstand the seismic design basis loads without loss of safety function.

3. Each EPA as being qualified for a harsh environment can withstand the environmental conditions that would exist before, during, and following a design basis accident without loss of safety function for the time required to perform the safety function.

4. Physical separation is provided between trains of EPAs and between EPAs containing Class 1E cables and EPAs containing non-Class 1E cables.

5. The primary and secondary protection devices for each EPA are designed and sized to protect EPA from overload and fault current.

6. Separate penetrations are provided for medium voltage and low voltage power, control, and instrumentation circuits.

2.6.5.2 Inspections, Tests, Analyses, and Acceptance Criteria

Table 2.6.5-1 specifies the inspections, tests, analyses, and associated acceptance criteria for the containment EPAs.

Table 2.6.5-1 (1 of 2)

Containment Electrical Penetration Assemblies ITAAC

Design Commitment	Inspections, Tests, Analyses	Acceptance Criteria
1. The electric power, control, and instrumentation cables pass through the wall of reactor containment building (RCB) via the EPAs.	1. Inspection of the as-built electric power, control and instrumentation cables that pass through the as-built wall of reactor containment building (RCB) will be performed.	1. A report exists and concludes that the as-built electric power, control, and instrumentation cables pass through the as-built wall of reactor containment building (RCB) via the as-built EPAs.
2. Each EPA, including the supports and anchorages, can withstand the seismic design basis loads without loss of safety function.	2.a Inspections will be performed to verify that each as-built EPA is located in a seismic Category I structure.	2.a A report exists and concludes that each as-built EPA is located in a seismic Category I structure.
	2.b Type tests, analyses, or a combination of type tests and analyses of each EPA will be performed using analytical assumptions, or will be performed under conditions which bound the seismic design basis requirements.	2.b A report exists and concludes that each EPA can withstand seismic design basis loads without loss of safety function.
	2.c Inspections will be performed to verify that each as-built EPA, including the supports and anchorages, is seismically bounded by the tested or analyzed conditions.	2.c A report exists and concludes that each as-built EPA, including the supports and anchorages, is seismically bounded by the tested or analyzed conditions.
3. Each EPA as being qualified for a harsh environment can withstand the environmental conditions that would exist before, during, and following a design basis accident without loss of safety function for the time required to perform the safety function.	3.a Type tests or a combination of type tests and analyses will be performed on each EPA located in a harsh environment.	3.a A report exists and concludes that each EPA as being qualified for a harsh environment can withstand the environmental conditions that would exist before, during, and following a design basis accident without loss of safety function for the time required to perform the safety function.

Table 2.6.5-1 (2 of 2)

Design Commitment	Inspections, Tests, Analyses	Acceptance Criteria
3. (cont.)	3.b Inspections will be performed on each as-built EPA located in a harsh environment.	3.b A report exists and concludes that each as-built EPA as being qualified for a harsh environment is bounded by type tests or a combination of type tests and analyses.
4. Physical separation is provided between trains of EPAs and between EPAs containing Class 1E cables and EPAs containing non-Class 1E cables.	4. Inspection of the as-built EPAs will be performed.	4. Physical separation exists in accordance with NRC RG 1.75 between as-built trains of EPA and between EPAs containing Class 1E cables and EPAs containing non-Class 1E cables.
5. The primary and secondary protection devices for each EPA are designed and sized to protect EPA from overload and fault current.	5.a Analyses will be performed to verify that the primary and secondary protection devices are sized to protect EPA from overload and fault current.	5.a A report exists and concludes that the as-built primary and secondary protection devices are designed and sized to protect EPA from overload and fault current.
	5.b Inspection of the rating of the primary and secondary protection devices will be performed.	5.b A report exists and concludes that the as-built primary and secondary protection for each EPA meets the protective device selection and setting requirements of the analysis.
6. Separate penetrations are provided for medium voltage and low voltage power, control, and instrumentation circuits.	6. Inspection of the as-built penetrations for the medium voltage and low voltage power, control, and instrumentation circuits will be performed.	6. Each as-built penetration contains only medium voltage or low voltage power or only control or instrumentation circuits.

2.6.6 Alternate AC Source

2.6.6.1 Design Description

The alternate ac (AAC) source supplies power to safety-related loads to maintain the plant in a safe shutdown condition during station blackout (SBO). The AAC source also provides power to the permanent non-safety (PNS) buses during a loss of offsite power (LOOP) condition. The AAC source can be connected to Class 1E trains and PNS trains as shown on Figure 2.6.1-1. The AAC source is a gas turbine generator (GTG) that is independent from the EDGs and the offsite power sources. The AAC GTG is provided with dedicated fuel oil storage tank, fuel oil day tank, fuel oil transfer pumps, which are designed as non-safety-related.

The AAC source is designed as follows:

1. The functional arrangement of the AAC source is as described in the Design Description of Subsection 2.6.6.1.

2. The AAC source is sized with sufficient capacity to accommodate SBO and LOOP conditions.

3. The AAC source is connected to the Class 1E train A or train B bus through two in series (one Class 1E circuit breaker at the Class 1E bus and the other non-Class 1E circuit breaker at the non-Class 1E AAC bus) circuit breakers during SBO condition.

4. The AAC source is started, brought up to the required voltage and frequency, and connected manually to the Class 1E train A or train B bus within 10 minutes of the onset of an SBO.

5. The AAC source is installed in the separate building.

6. The GTG has sufficient fuel oil storage capacity to supply power to the required SBO loads for 24 hours.

7. The GTG fuel oil system is non-safety-related and independent from that of the Class 1E EDGs.

8.a Each fuel oil transfer pump is capable of transferring oil from the fuel oil storage tank to its corresponding day tank at sufficient pressure and flow to cover the maximum demand at GTG continuous rated load while simultaneously increasing day tank level.

8.b The fuel oil transfer pumps have sufficient net positive suction head (NPSH).

9. One fuel oil transfer pump is designed to automatically supply fuel oil from the storage tank to the day tank prior to actuation of low level alarm and stops automatically on a fuel oil day tank high-level signal.

10. The air intakes for the GTG combustion are separated from the GTG exhaust ducts.

11. Controls exist in the MCR and RSR to start and stop the AAC GTG and to synchronize the AAC GTG to its respective Class 1E bus.

12. Each day tank provides fuel oil for at least 60 minutes plus a minimum additional margin of 10 percent at GTG rated load.

2.6.6.2 Inspections, Tests, Analyses, and Acceptance Criteria

Table 2.6.6-1 specifies the inspections, tests, analyses, and associated acceptance criteria for the AAC source.

Table 2.6.6-1 (1 of 4)

Alternate AC Source ITAAC

Design Commitment	Inspections, Tests, Analyses	Acceptance Criteria
1. The functional arrangement of the AAC source is as described in the Design Description of Subsection 2.6.6.1.	1. Inspection of the as-built AAC source will be performed.	1. The as-built AAC source conforms with the functional arrangement described in the Design Description of Subsection 2.6.6.1.
2. The AAC source is sized with sufficient capacity to accommodate SBO and LOOP conditions.	2.a Analyses will be performed to verify that the AAC source is capable of supplying power for SBO and LOOP conditions.	2.a A report exists and concludes that the calculated size of the AAC source gives it the sufficient capacity to accommodate SBO and LOOP loads.
	2.b Inspections will be performed to verify that the rating of the as-built AAC source is of sufficient capacity to accommodate SBO and LOOP loads.	2.b The rating of the as-built AAC source is of sufficient capacity to accommodate SBO and LOOP loads.
	2.c Tests will be performed to verify that the AAC source is capable of supplying rated power at proper voltage and frequency.	2.c A report exists and concludes that the AAC source is capable of supplying rated power at proper voltage and frequency.
3. The AAC source is connected to the Class 1E train A or train B bus through two in series (one Class 1E circuit breaker at the Class 1E bus and the other non-Class 1E circuit breaker at the non-Class 1E AAC bus) circuit breakers during SBO condition.	3. Inspection of the connection between as-built Class 1E train bus and as-built AAC source will be performed.	3. The as-built AAC source is connected to the Class 1E train A or train B bus through two in series (one Class 1E circuit breaker at the Class 1E bus and the other non-Class 1E circuit breaker at the non-Class 1E AAC bus) circuit breakers.

Table 2.6.6-1 (2 of 4)

Design Commitment	Inspections, Tests, Analyses	Acceptance Criteria
4. The AAC source is started, brought up to the required voltage and frequency, and connected manually to the Class 1E train A or train B bus within 10 minutes of the onset of an SBO.	4.a Tests will be performed to verify that the as-built AAC source is started, brought up to the required voltage and frequency, and connected manually to the as-built Class 1E train bus within 10 minutes of the onset of a simulated SBO event.	4.a The as-built AAC source is started, brought up to the required voltage and frequency, and connected manually to the Class 1E train A or train B bus within 10 minutes of the onset of a simulated SBO event.
	4.b Tests will be performed to verify that the as-built AAC source is manually aligned to the as-built Class 1E train A or train B bus within 10 minutes of the onset of a simulated SBO event during a LOOP condition.	4.b The as-built AAC source is manually aligned to the as-built Class 1E train A or train B bus within 10 minutes of the onset of a simulated SBO event during a LOOP condition.
5. The AAC source is installed in the separate building.	5. Inspection of the location of the as-built AAC source will be performed.	5. The as-built AAC source is located in the dedicated building which is separated from the EDGs.
6. The GTG has sufficient fuel oil storage capacity to supply power to the required SBO loads for 24 hours.	6.a Analyses will be performed to determine the required GTG fuel oil storage tank capacity needed to supply power to the required SBO loads for 24 hours.	6.a A report exists and concludes the required GTG fuel oil storage tank capacity needed to supply power to the required SBO loads for 24 hours.
	6.b Inspection of the GTG fuel oil storage tank will be performed to verify that the capacity bounds the analysis.	6.b The as-built GTG fuel oil storage tank capacity bounds the analysis.
7. The GTG fuel oil system is non-safety-related and independent from that of the Class 1E EDGs.	7. Inspections will be performed of the as-built GTG fuel oil system.	7. The as-built GTG fuel oil system is independent and separated from that of the EDG.

Table 2.6.6-1 (3 of 4)

Design Commitment		Inspections, Tests, Analyses		Acceptance Criteria	
8.a	Each fuel oil transfer pump is capable of transferring oil from the fuel oil storage tank to its corresponding day tank at sufficient pressure and flow to cover the maximum demand at GTG continuous rated load while simultaneously increasing day tank level.	8.a.i	Analysis of each fuel oil transfer pump will be performed to determine the required flow rate to support the maximum demand of the GTG at continuous rated load while simultaneously increasing day tank level.	8.a.i	A report exists and concludes that each as-built fuel oil transfer pump is sized to transfer fuel oil from the fuel oil storage tank to its corresponding day tank, at a flow rate to support the maximum demand of the GTG at continuous rated load while simultaneously increasing day tank level.
		8.a.ii	Test of each fuel oil transfer pump will be performed to verify that the fuel oil transfer pump flow rate bounds the analysis.	8.a.ii	A report exists and concludes that each as-built GTG fuel oil transfer pump flow rate bounds the analysis.
8.b	The fuel oil transfer pumps have sufficient net positive suction head (NPSH).	8.b	Test to measure the as-built fuel oil transfer pump suction pressure will be performed. Inspection and analyses to determine NPSH available to each pump will be performed based on test data and as-built data.	8.b	A report exists and concludes that the as-built calculated NPSH available exceeds each fuel oil transfer pump's NPSH required.
9.	One fuel oil transfer pump is designed to automatically supply fuel oil from the storage tank to the day tank prior to actuation of low level alarm and stops automatically on a fuel oil day tank high-level signal.	9.	Tests will be performed on the as-built fuel oil transfer pump by providing a test signal of a simulated fuel oil day tank level.	9.	The as-built fuel oil transfer pump starts automatically to supply fuel oil from the storage tank to the day tank prior to actuation of low level alarm and stops automatically on a fuel oil day tank high-level signal.
10.	The air intakes for the GTG combustion are separated from the GTG exhaust ducts.	10.	Inspection and analysis of the as-built GTG air intakes and air exhaust will be performed.	10.	The air intake and air exhaust are separated by analyzed distance and orientation.

Table 2.6.6-1 (4 of 4)

Design Commitment	Inspections, Tests, Analyses	Acceptance Criteria
11. Controls exist in the MCR and RSR to start and stop the AAC GTG and to synchronize the AAC GTG to its respective Class 1E bus.	11. Tests will be performed using the AAC GTG controls in the MCR and RSR to start and stop the AAC GTG and to synchronize the AAC GTG to its respective Class 1E bus.	11. Controls in the as-built MCR and RSR room start and stop the AAC GTG and synchronize the AAC GTG to its respective Class 1E bus
12. Each day tank provides fuel oil for at least 60 minutes plus a minimum additional margin of 10 percent at GTG rated load.	12.a Analyses will be performed to determine day tank capacities and GTG fuel consumption.	12.a A report exists and concludes that each day tank's capacity is sufficient to provide fuel oil for at least 60 minutes plus a minimum additional margin of 10 percent at GTG rated load.
	12.b Inspections will be performed to verify that each as-built day tank capacity bounds the analysis.	12.b Each as-built day tank's capacity bounds the analysis.

2.6.7 Lightning Protection and Grounding System

2.6.7.1 Design Description

The grounding and lightning protection system is provided for personnel and equipment protection from the effects of transient overvoltage that can occur in electrical systems due to electrical faults or lightning strikes. The grounding and lightning protection system is divided into subsystems such as neutraling grounding, equipment grounding, instrumentation grounding, and lightning protection, and connected to the plant ground grid. The ground conductor spacing and quantity are designed to be sufficient to limit touch voltages to tolerable values.

1. The functional arrangement of the grounding and lightning protection system is as described in the Design Description of Subsection 2.6.7.1.

2. Lightning protection systems are provided for buildings, structures and transformers located outside of the buildings. Surge arrestors are provided for main transformers, auxiliary transformers.

3. Neutral grounding is installed at the ground bus of main generator, main transformer, unit auxiliary transformers, standby auxiliary transformers, load center transformers, low voltage dry-type distribution transformers, EDGs, and AAC GTG.

4. Equipment grounding is installed at all metal structures such as buildings, tanks, transformers, transmission structures, equipment enclosure including grounding busbar, and raceway.

5. The instrumentation grounding system is a separate radial ground system that consists of instrumentation ground bus and insulated cables.

6. The plant ground grid consists of buried, interconnected bare copper conductors and ground rods forming a plant ground grid that is designed to limit personnel step and touch voltages to an acceptable level during a ground fault.

2.6.7.2 Inspections, Tests, Analyses, and Acceptance Criteria

Table 2.6.7-1 specifies the inspections, tests, analyses, and associated acceptance criteria for the grounding and lightning system.

Table 2.6.7-1 (1 of 2)

Grounding and Lightning Protection System ITAAC

Design Commitment	Inspections, Tests, Analyses	Acceptance Criteria
1. The functional arrangement of the grounding and lightning protection system is as described in the Design Description of Subsection 2.6.7.1.	1. Inspection of the as-built grounding and lightning protection system will be performed.	1. The as-built grounding and lightning protection system conforms with the functional arrangement as described in the Design Description of Subsection 2.6.7.1.
2. Lightning protection systems are provided for buildings, structures and transformers located outside of the buildings. Surge arrestors are provided for main transformers, and auxiliary transformers.	2. Inspection of the as-built lightning protection systems will be performed.	2. Lightning protection systems are provided for buildings, structures, and transformers located outside the buildings. Surge arrestors are provided for main transformers and auxiliary transformers.
3. Neutral grounding is installed at the ground bus of main generator, main transformer, unit auxiliary transformers, standby auxiliary transformers, load center transformers, low voltage dry-type distribution transformers, EDGs, and AAC GTG.	3. Inspection of the as-built neutral grounding system will be performed.	3. Neutral grounding is installed at the ground bus of the main generator, main transformer, unit auxiliary transformer, standby auxiliary transformer, and load center.
4. Equipment grounding is installed at all metal structures such as buildings, tanks, transformers, transmission structures, equipment enclosure including grounding busbar, and raceway.	4. Inspection of the as-built equipment grounding system will be performed.	4. Equipment grounding is installed at all metal structures such as buildings, tanks, transformers, transmission structures, equipment enclosure including grounding busbar, and raceway.

Table 2.6.7-1 (2 of 2)

Design Commitment	Inspections, Tests, Analyses	Acceptance Criteria
5. The instrumentation grounding system is a separate radial ground system that consists of instrumentation ground bus and insulated cables.	5. Inspection of the as-built instrumentation grounding system will be performed.	5. The instrumentation grounding system is a separate radial ground system that consists of instrumentation ground bus and insulated cables.
6. The plant ground grid consists of buried, interconnected bare copper conductors and ground rods forming a plant ground grid that is designed to limit personnel step and touch voltages to an acceptable level during a ground fault.	6.a Analyses will be performed to design a plant ground grid that limits personnel step and touch voltages to an acceptable level as determined by IEEE Std. 80.	6.a A report and drawings exist and conclude that the plant ground grid design limits personnel step and touch voltages to an acceptable level as determined by IEEE Std. 80.
	6.b Inspection of the as-built plant ground grid will be performed to verify that the plant ground grid conforms to the analysis.	6.b The as-built plant ground grid design conforms to the analysis.

2.6.8 Lighting Systems

2.6.8.1 Design Description

The plant lighting system is non-Class 1E and consists of two subsystems which are normal lighting and emergency lighting. Emergency lighting system is divided into emergency ac and dc lighting system.

1. The functional arrangement of the lighting system is as described in the Design Description of Subsection 2.6.8.1.

2. The normal lighting system provides normal levels of illumination throughout the plant and is powered from the non-Class 1E ac buses.

3. The emergency ac lighting system is powered from the Class 1E ac buses backed-up by the Class 1E emergency diesel generators during a LOOP and the non-Class 1E AAC source during an SBO.

4.a There are two configurations for lighting fixture used within the emergency dc lighting system, lighting fixtures powered from non-Class 1E station battery and self-contained battery pack unit lighting fixtures.

4.b The emergency dc lighting fixtures equipped with self-contained rechargeable battery pack are powered from Class 1E or non-Class 1E ac in accordance with area designation. The emergency illumination level is not less than an average of 1 foot-candle and at least 0.1 foot-candle at the floor level for 8 hours for access and egress route..

5. The emergency illumination levels in MCR and RSR are minimum 10 foot-candle for 8 hours.

2.6.8.2 Inspections, Tests, Analyses, and Acceptance Criteria

Table 2.6.8-1 specifies the inspections, tests, analyses, and associated acceptance criteria for the lighting system.

Table 2.6.8-1 (1 of 2)

Lighting Systems ITAAC

Design Commitment	Inspections, Tests, Analyses	Acceptance Criteria
1. The functional arrangement of the lighting system is as described in the Design Description of Subsection 2.6.8.1.	1. Inspection of the as-built lighting system will be performed.	1. The as-built lighting system conforms with the functional arrangement as described in the Design Description of Subsection 2.6.8.1.
2. The normal lighting system provides normal levels of illumination throughout the plant and is powered from the non-Class 1E ac buses.	2. Inspection of the as-built normal lighting system will be performed.	2. The normal lighting system provides normal levels of illumination throughout the plant and is powered from the non-Class 1E ac buses.
3. The emergency ac lighting system is powered from the Class 1E ac buses backed-up by the Class 1E emergency diesel generators.	3. Inspection of the as-built emergency ac lighting will be performed.	3. The emergency ac lighting system is powered from the Class 1E ac buses backed-up by the Class 1E emergency diesel generators.
4.a There are two configurations for lighting fixture used within the emergency dc lighting system, lighting fixtures powered from non-Class 1E station battery and self-contained battery pack unit lighting fixtures.	4.a Inspection of the as-built emergency dc lighting will be performed.	4.a There are two configurations for lighting fixture used within the emergency dc lighting system, lighting fixtures powered from the non-Class 1E station battery and self-contained battery pack unit lighting fixtures.

Table 2.6.8-1 (2 of 2)

Design Commitment	Inspections, Tests, Analyses	Acceptance Criteria
4.b The emergency dc lighting fixtures equipped with self-contained rechargeable battery pack are powered from Class 1E or non-Class 1E ac in accordance with area designation. The emergency illumination level is not less than an average of 1 foot-candle and at least 0.1 foot-candle at the floor level for 8 hours for access and egress route.	4.b.i Inspection of the as-built emergency dc lighting will be performed.	4.b.i The as-built emergency dc lighting fixture equipped with self-contained rechargeable battery pack are powered from Class 1E or non-Class 1E ac in accordance with area designation.
	4.b.ii Test of the emergency dc self-contained battery pack lighting units will be performed.	4.b.ii The illumination level is not less than an average of 1 foot-candle and at least 0.1 foot-candle at the floor level for 8 hours for access and egress route.
5. The emergency illumination levels in MCR and RSR are minimum 10 foot-candle for 8 hours.	5. Test of the as-built emergency lighting system in MCR and RSR are will be performed.	5. The as-built emergency illumination levels in MCR and RSR are minimum 10 foot-candle for 8 hours as required by NUREG-0700.

2.6.9 Communication Systems

2.6.9.1 Design Description

The plant communication systems are non-safety-related systems that provide effective intra-plant and plant-to-offsite communications. The following buildings contain communications systems:

a. Reactor containment building

b. Turbine generator building

c. Auxiliary building

d. Compound building

e. Emergency diesel generator building

f. AAC gas turbine generator building

g. ESW building

h. CCW HX building

i. Security building 1 / Security building 2

j. Main access control building

The various communication systems provide independent and alternate paths to provide reasonable assurance of the capability to communicate with plant personnel and organizations during all operating or emergency conditions.

The communication systems consist of the following independent subsystems:

a. Paging phone system

b. Evacuation alarm address system

c. Public address system

d. Sound powered telephone system

e. Telephone system

f. Plant time synchronizing system

g. LAN and VPN system

h. Wireless communication system

The various subsystems of the plant communication system are as stated in Subsection 2.6.9.

1. Paging phone system provides page and party communications between MCR, RSR, and other areas.

2. Sound powered telephone system provides communications between MCR, TSC, refueling areas, turbine-generator operating deck, RSR, electrical and I&C equipment areas, and other high maintenance active areas.

3.a Evacuation alarm address system provides alarm for radiation and fire accidents throughout the plant.

3.b Public address system provides broadcasting throughout the plant.

3.c Telephone system provides communication throughout the plant.

3.d Plant time synchronizing system provides standard time information throughout the plant.

3.e LAN and VPN systems provide network throughout the plant.

3.f Wireless communication system provides a stand-alone method of plant-wide communication throughout the plant.

2.6.9.2 Inspections, Tests, Analyses, and Acceptance Criteria

Table 2.6.9-1 describes the inspections, tests, analyses, and associated acceptance criteria for the communication systems.

Table 2.6.9-1 (1 of 2)

Communication Systems ITAAC

Design Commitment	Inspections, Tests, Analyses	Acceptance Criteria
1. Paging phone system provides page and party communications between MCR, RSR, and other areas.	1. Test of the as-built paging phone system between MCR, RSR, and other areas will be performed.	1. The as-built paging phone system provides page and party communications between MCR, RSR, and other areas.
2. Sound powered telephone system provides communications between MCR, TSC, refueling areas, turbine-generator operating deck, RSR, electrical and I&C equipment areas, and other high maintenance active areas.	2. Test of the as-built sound powered telephone system between MCR, TSC, refueling areas, turbine-generator operating deck, RSR, electrical and I&C equipment areas, and other high maintenance active areas will be performed.	2. The as-built sound powered telephone system provides communications between MCR, TSC, refueling areas, turbine-generator operating deck, RSR, electrical and I&C equipment areas, and other high maintenance active areas.
3.a Evacuation alarm address system provides alarm for radiation and fire accidents throughout the plant.	3.a Tests of the as-built evacuation alarm address system throughout the plant will be performed.	3.a The as-built evacuation alarm address system provides alarm for radiation and fire accidents throughout the plant.
3.b Public address system provides broadcasting throughout the plant.	3.b Tests of the as-built public address system throughout the plant will be performed.	3.b The as-built public address system provides broadcasting throughout the plant.
3.c Telephone system provides communication throughout the plant.	3.c Tests of the as-built telephone system throughout the plant will be performed.	3.c The as-built telephone system provides communication throughout the plant.
3.d Plant time synchronizing system provides standard time information throughout the plant.	3.d Tests of the as-built plant time synchronizing system throughout the plant will be performed.	3.d The as-built plant time synchronizing system provides standard time information throughout the plant.
3.e LAN and VPN systems provide network throughout the plant.	3.e Tests of the as-built LAN and VPN systems throughout the plant will be performed.	3.e The as-built LAN and VPN systems provide network throughout the plant.

Table 2.6.9-1 (2 of 2)

Design Commitment	Inspections, Tests, Analyses	Acceptance Criteria
3.f Wireless communication system provides a stand-alone method of plant-wide communication throughout the plant.	3.f Tests of the as-built wireless communication system throughout the plant will be performed.	3.f The as-built wireless communication system provides a stand-alone method of plant-wide communication throughout the plant.

2.7 Plant Systems

2.7.1 Power Generation Systems

2.7.1.1 Turbine Generator

2.7.1.1.1 Design Description

The turbine generator (T/G) is a non-safety-related system that converts the energy of the steam produced from the steam generators into rotational energy and then electrical energy.

The T/G has favorably oriented turbines. Potential missiles from the failure of the T/G should not affect essential SSCs since they are located outside the low trajectory turbine strike zone. The low pressure turbine rotor integrity is ensured by the combination of design, material properties including fracture toughness, tests, and inspections of the rotor to limit the probability of turbine missile generation. Turbine rotor components and turbine stop and control valves will be inservice tested and inspected at intervals in accordance with industry practice or as specified by the manufacturer to meet turbine missile generation probability requirements.

The T/G is located within the turbine building and consists of:

a. One (1) double-flow high pressure (HP) turbine

b. Three (3) double-flow low pressure (LP) turbines

c. A generator and exciter

d. Two (2) sets of moisture separator and reheaters

e. Associated piping, valves, control system

f. Auxiliary systems

The main stop valves (MSVs) and control valves (CVs) are arranged in series at the HP turbine inlet and control the steam flow entering the HP turbine. The intermediate stop valves (ISVs) and intercept valves (IVs) are arranged in series at the inlet to the LP turbines, and control steam flow to the LP turbines. The non-return check valves are installed in the extraction lines to the feedwater heaters.

1.a The functional arrangement of the T/G system is as described in the Design Description of Subsection 2.7.1.1.1.

1.b The T/G has a favorable orientation to minimize the potential effects of turbine missiles on essential (as defined in Regulatory Guide 1.115, Rev. 2, Appendix A) SSCs.

2.a The mechanical overspeed trip system initiates the T/G trip by closing the MSVs, CVs, ISVs, and IVs upon reaching the overspeed setpoint.

2.b The electrical overspeed trip system, which is independent of the normal speed control system and mechanical overspeed trip system, initiates a T/G trip byclosing the MSVs, CVs, ISVs, and IVs upon reaching the electrical overspeed setpoint.

3. The control system generates the electrical signals in the main control room (MCR) for T/G trip.

4. The MSVs, CVs, ISVs, and IVs close reacting to a T/G trip signal.

5. The non-return check valves on extraction lines close reacting to T/G trip signal.

6. The reactor trip signal from the plant control system initiates a T/G trip.

7. The probability of a strike by a turbine missile is sufficiently low to prevent equipment damage to essential SSCs.

8. The as-built turbine material properties, turbine rotor and blade designs, pre-service inspection and testing results and in-service testing and inspection requirements meet the requirements defined in the Turbine Missile Probability Analysis performed by the COL applicant.

2.7.1.1.2 Inspection, Tests, Analyses, and Acceptance Criteria

Table 2.7.1.1-1 describes the ITAAC for the T/G.

Table 2.7.1.1-1 (1 of 3)

Turbine Generator ITAAC

Design Commitment		Inspections, Tests, Analyses		Acceptance Criteria	
1.a	The functional arrangement of the T/G system is as described in the Design Description of Subsection 2.7.1.1.1.	1.a	Inspection of the as-built T/G system configuration will be conducted.	1.a	The as-built T/G conforms with the functional arrangement as described in the Design Description of Subsection 2.7.1.1.1.
1.b	The T/G has a favorable orientation to minimize the potential effects of turbine missiles on essential (as defined in Regulatory Guide 1.115, Rev. 2, Appendix A) SSCs.	1.b	Inspections of turbine orientation with respect to the essential SSCs will be conducted.	1.b	A report exists and concludes that no essential SSCs (as defined in Regulatory Guide 1.115, Rev. 2, Appendix A) are located inside the low trajectory turbine missile strike zone.
2.a	The mechanical overspeed trip system initiates the T/G trip by closing the MSVs, CVs, ISVs, and IVs upon reaching the overspeed setpoint.	2.a	A trip test will be conducted on the as-built main turbine system to ensure the T/G trips on reaching an overspeed setpoint.	2.a	A report of testing exists and concludes the mechanical overspeed trip system initiates the T/G trip by closing the MSVs, CVs, ISVs, and IVs upon reaching the overspeed setpoint.

Table 2.7.1.1-1 (2 of 3)

Design Commitment	Inspections, Tests, Analyses	Acceptance Criteria
2.b The electrical overspeed trip system, which is independent of the normal speed control system and mechanical overspeed trip system, initiates a T/G trip by closing the MSVs, CVs, ISVs, and IVs upon reaching the electrical overspeed setpoint.	2.b A trip test will be conducted on the as-built main turbine system by an actual or simulated trip signal.	2.b A report of testing exists and concludes the electrical overspeed trip system initiates a T/G trip by closing the MSVs, CVs, ISVs, and IVs upon reaching the electrical overspeed setpoint.
3. The control system generates the electrical signals in the main control room (MCR) for T/G trip.	3. Tests will be conducted on the as-built T/G system by controls in the MCR.	3. A report of testing exists and concludes that controls in the as-built MCR close the MSVs, CVs, ISVs, and IVs.
4. The MSVs, CVs, ISVs, and IVs close reacting to a T/G trip signal.	4. Tests will be conducted on the as-built MSVs, CVs, ISVs, and IVs by an actual or simulated T/G trip signal.	4. A report of testing exists and concludes that each MSV, CV, ISV, and IV closes within 0.3 second of an actual or simulated trip signal.
5. The non-return check valves on the extraction lines close reacting to a T/G trip signal.	5. Tests will be conducted on the as-built extraction non-return check valves by an actual or simulated T/G trip signal	5. A report of testing exists and concludes that the non-return check valve closes within 1.0 second of an actual or simulated to T/G trip signal.
6. The reactor trip signal from the plant control system initiates a T/G trip.	6. A test of the as-built system will be conducted by a simulated reactor trip signal.	6. A report of testing exists and concludes that the as-built control logic generates a T/G trip by a simulated reactor trip signal.

Table 2.7.1.1-1 (3 of 3)

Design Commitment	Inspections, Tests, Analyses	Acceptance Criteria
7. The probability of a strike by a turbine missile is sufficiently low to prevent equipment damage to essential SSCs.	7. A turbine missile probability analysis will be performed to demonstrate the probability of turbine failure resulting in the ejection of turbine rotor (or internal structure) fragments through the turbine casing is less than the regulatory limiting acceptance criteria.	7. Turbine Missile Probability Analysis Report(s) performed by the COL applicant for the as-built T/G exist and conclude that the probability of turbine failure resulting in the ejection of turbine rotor (or internal structure) fragments through the turbine casing is less than $1x10^{-5}$ per year.
8. The as-built turbine material properties, turbine rotor and blade designs, pre-service inspection and testing results and in-service testing and inspection requirements meet the requirements defined in the Turbine Missile Probability Analysis performed by the COL applicant.	8. An inspection of the as-built turbine material properties, turbine rotor and blade designs, pre-service inspection and testing results, and in-service testing and inspection requirements will be conducted.	8. A report exists and concludes that the as-built turbine material properties, turbine rotor and blade designs, pre-service inspection and testing results and in-service testing and inspection requirements meet the requirements defined in the Turbine Missile Probability Analysis.

2.7.1.2 Main Steam System

2.7.1.2.1 Design Description

The main steam system (MSS) transports steam from the steam generators to the power conversion system and removes heat from the reactor coolant system (RCS).

The safety-related portion of the MSS consists of the main steam piping and valves located between the steam generator outlet nozzles in the containment up to and including the main steam isolation valves (MSIVs) in the main steam valve houses (MSVHs). The non-safety-related portions of the MSS, downstream of the isolation valves, are located in the auxiliary building and the turbine building.

The MSS has the following safety-related functions:

a. To supply steam to the auxiliary feedwater pump turbine

b. To protect the steam generator and pressure boundary components in the MSS from over pressurization

c. To cooldown the Reactor Coolant System through a controlled discharge of steam to the atmosphere

d. To isolate the containment and steam generator

The MSS has the following non-safety-related functions:

a. To supply steam to the main turbine

b. To provide a flow path to the turbine bypass system

The MSS is designed as follows:

1. The functional arrangement of the MSS is as described in the Design Description of Subsection 2.7.1.2.1 and in Table 2.7.1.2-1 and as shown in the Figure 2.7.1.2-1.

2.a The ASME Code components identified in Table 2.7.1.2-2 are designed and constructed in accordance with ASME Section III requirements.

2.b The ASME Code piping, including supports, identified in Table 2.7.1.2-1 is designed and constructed in accordance with ASME Section III requirements.

3.a Pressure boundary welds in ASME Code components identified in Table 2.7.1.2-2 meet ASME Section III requirements.

3.b Pressure boundary welds in ASME Code piping identified in Table 2.7.1.2-1 meet ASME Section III requirements.

4.a The ASME Code components identified in Table 2.7.1.2-2 retain their pressure boundary integrity at their design pressure.

4.b The ASME Code piping identified in Table 2.7.1.2-1 retains its pressure boundary integrity at its design pressure.

5.a The seismic Category I components and instruments identified in Tables 2.7.1.2-2 and 2.7.1.2-3, including the supports and anchorages, withstand seismic design basis loads without loss of safety function.

5.b The seismic Category I piping, including supports, identified in Table 2.7.1.2-1 withstands seismic design basis loads without loss of safety function.

6.a The Class 1E components and instruments identified in Tables 2.7.1.2-2 and 2.7.1.2-3 as being qualified for a harsh environment (and the associated wiring, cables, and terminations) withstand the environmental conditions that would exist before, during, and following a design basis accident without loss of safety function for the time required to perform the safety function.

6.b Each of the Class 1E components and instruments identified in Tables 2.7.1.2-2 and 2.7.1.2-3 is powered from its respective Class 1E division.

6.c Physical separation and electrical isolation are provided (1) between Class 1E divisions, and (2) between Class 1E divisions and non-Class 1E divisions.

7.a The MS system safety-related valves listed in Table 2.7.1.2-2 are functionally designed and qualified to perform their safety-related function under the full range of fluid flow, differential pressure, electrical, and temperature conditions up to and including design basis accident conditions.

7.b After loss of motive power, MOVs, AOVs and electro-hydraulic valves identified in Table 2.7.1.2-2, assume the indicated loss of motive power position.

8.a Controls exist in the MCR to open and close the MOVs, AOVs and electro-hydraulic valves listed in Table 2.7.1.2-2.

8.b Controls exist in the RSR to open and close the MOVs, AOVs and electro-hydraulic valves listed in Table 2.7.1.2-2.

8.c Displays and alarms exist and are retrievable in the MCR as defined in Tables 2.7.1.2-2 and 2.7.1.2-3.

8.d Displays and alarms exist and are retrievable in the RSR as defined in Tables 2.7.1.2-2 and 2.7.1.2-3.

9. Each mechanical division of the MSS is physically separated from the other divisions.

10. The MSSVs, identified in the Table 2.7.1.2-2, provide overpressure protection for the secondary side of the steam generators and for pressure boundary components in the MSS.

11. The MSIVs and MSIV bypass valves identified in Table 2.7.1.2-2 close on receipt of an MSIS within the required response time.

12. The MS non-metallic parts, materials, and lubricants used in safety-related mechanical equipment perform their safety-related function up to the end of their qualified life in the design basis harsh environmental conditions (both internal service conditions and external environmental conditions) experienced during normal operations, anticipated operational occurrences, design-basis accidents, and post accident conditions.

2.7.1.2.2 Inspections, Tests, Analyses, and Acceptance Criteria

Table 2.7.1.2-4 specifies the inspections, tests, analyses, and associated acceptance criteria for the MSS.

Table 2.7.1.2-1

Main Steam System Equipment and Piping Location/Characteristics

Equipment & Piping Name	Location	ASME Section III Class	Seismic Category
MSADV (Electro-Hydraulic)	MSVH	2	I
MSADV isolation valve (MOV)	MSVH	2	I
AF pump turbine steam supply valve (AOV)	MSVH	2	I
AF pump warmup valve (AOV)	MSVH	2	I
MS line drain isolation valve (AOV)	MSVH	2	I
MSIV (Electro-Hydraulic)	MSVH	2	I
MSIVBV (Electro-Hydraulic)	MSVH	2	I
MSIVBV flow control valve (MOV)	MSVH	2	I
MSSV (Spring-loaded Valve)	MSVH	2	I
Piping from SG outlet up to and including MSVH penetration anchor wall	CB, MSVH	2	I
Piping from outlet of MSADVs and MSSVs	MSVH, Atmospheric	NNS	II

Table 2.7.1.2-2 (1 of 2)

Main Steam System Components List

Component Name	Item No.	ASME Section III Class	Seismic Category	Class 1E/ Harsh Envir. Qual.	Control/ Display at MCR	Control/ Display at RSR	Control Signal	Active Safety Function	Loss of Motive Power Position
MSADV (Electro-Hydraulic)	MS-V101, 102, 103, 104	2	I	Yes/Yes	Yes/Yes	Yes/Yes	-	Open-Close (Modulation)	Close
MSADV isolation valve (MOV)	MS-V105, 106, 107, 108	2	I	Yes/Yes	Yes/Yes	Yes/Yes	-	-	As-is
AF pump turbine steam supply valve (AOV)	MS-V109,110	2	I	Yes/Yes	Yes/Yes	Yes/Yes	AFAS	Close	Open
AF pump warmup valve (AOV)	MS-V111,112	2	I	Yes/Yes	Yes/Yes	Yes/Yes	-	Close	Open
MS line drain isolation valve (AOV)	MS-V090, 091, 092, 093	2	I	Yes/Yes	Yes/Yes	Yes/Yes	MSIS	Close	Close
MSIV (Electro-Hydraulic)	MS-V011, 012, 013, 014	2	I	Yes/Yes	Yes/Yes	Yes/Yes	MSIS	Close	Close
MSIVBV (Electro-Hydraulic)	MS-V015, 016, 017, 018	2	I	Yes/Yes	Yes/Yes	Yes/Yes	MSIS	Close	Close
MSIVBV flow control valve (MOV)	MS-V019, 020, 021, 022	2	I	No/Yes	Yes/Yes	Yes/Yes	-	-	As-is

Table 2.7.1.2-2 (2 of 2)

Component Name	Item No.	ASME Section III Class	Seismic Category	Class 1E/ Harsh Envir. Qual.	Control/ Display at MCR	Control/ Display at RSR	Control Signal	Active Safety Function	Loss of Motive Power Position
MSSV (Spring-loaded Valve)	MS-V1301, 1302, 1303, 1304, 1305, 1306, 1307, 1308, 1309, 1310, 1311, 1312, 1313, 1314, 1315, 1316, 1317, 1318, 1319, 1320	2	I	N/A / Yes	No/Yes	No/Yes	-	Open/Close	-

(1) Dash(-) indicates not applicable.

Table 2.7.1.2-3

Main Steam System Instrument List

Instrument Name	Item No.	Location	ASME Section III Class	Seismic Category	Class 1E/ Harsh Envir. Qual.	Display/ Alarm at MCR	Display/ Alarm at RSR
Steam Generator No.1 Pressure Transmitter	PT-1013A, 1013B, 1013C, 1013D	RCB	3	I	Yes/Yes	Yes/No	Yes/No
Steam Generator No.2 Pressure Transmitter	PT-1023A, 1023B, 1023C, 1023D	RCB	3	I	Yes/Yes	Yes/No	Yes/No
Steam Generator No.1 Flow Transmitter	FT-1011X, 1011Y, 1012X, 1012Y	RCB	NNS	II	No/No	Yes/No	Yes/No
Steam Generator No.2 Flow Transmitter	FT-1021X, 1021Y, 1022X, 1022Y	RCB	NNS	II	No/No	Yes/No	Yes/No
Main Steam Line Pressure Transmitter	PT-1024, 1027	MSVH	NNS	II	No/No	Yes/No	Yes/No
Main Steam Line Temperature Transmitter	TE-001, 002, 003, 004	MSVH	NNS	II	No/No	Yes/No	Yes/No
MSSV Leak monitoring sensor	XE-1301X/Y ~ 1320 X/Y	MSVH	NNS	II	No/No	No/Yes	No/Yes
Main Steam Common Header Pressure Indicator	PI-020	TGB	NNS	III	- /No	- / -	- / -
Main Steam Common Header Temperature Element	TE-021	TGB	NNS	III	No /No	Yes / No	Yes / No

(1) Dash(-) indicates not applicable.

Table 2.7.1.2-4 (1 of 7)

Main Steam System ITAAC

Design Commitment	Inspections, Tests, Analyses	Acceptance Criteria
1. The functional arrangement of the MSS is as described in the Design Description of Subsection 2.7.1.2.1 and in Table 2.7.1.2-1 and as shown in the Figure 2.7.1.2-1.	1. Inspection of the as-built MSS will be conducted.	1. The as-built MSS conforms with the functional arrangement as described in the Design Description of Subsection 2.7.1.2.1 and in Table 2.7.1.2-1 and as shown in Figure 2.7.1.2-1.
2.a The ASME Code components identified in Table 2.7.1.2-2 are designed and constructed in accordance with ASME Section III requirements.	2.a Inspection of the as-built ASME Code components identified in Table 2.7.1.2-2 will be performed and documented in the ASME data report(s).	2.a The ASME Section III data report(s) exist and conclude that the as-built ASME Code components identified in Table 2.7.1.2-2 are designed and constructed in accordance with ASME Section III requirements.
2.b The ASME Code piping, including supports, identified in Table 2.7.1.2-1 is designed and constructed in accordance with ASME Section III requirements.	2.b Inspection of the as-built ASME Code piping, including supports, identified in Table 2.7.1.2-1 will be performed and documented in the ASME data report(s).	2.b The ASME Section III data report(s) exist and conclude that the as-built ASME Code piping, including supports, identified in Table 2.7.1.2-1 is designed and constructed in accordance with ASME Section III requirements.
3.a Pressure boundary welds in ASME Code components identified in Table 2.7.1.2-2 meet ASME Section III requirements.	3.a Inspections of the as-built pressure boundary welds in ASME Code piping identified in Table 2.7.1.2-2 will be performed in accordance with the ASME Section III.	3.a A report exists and concludes that the ASME Section III requirements are met for non destructive examination of the as-built pressure boundary welds in ASME Code components identified in Table 2.7.1.2-2.
3.b Pressure boundary welds in ASME Code piping identified in Table 2.7.1.2-1 meet ASME Section III requirements.	3.b Inspections of the as-built pressure boundary welds in ASME Code piping identified in Table 2.7.1.2-1 will be performed in accordance with the ASME Section III.	3.b A report exists and concludes that the ASME Section III requirements are met for non-destructive examination of the as-built pressure boundary welds in ASME Code piping identified in Table 2.7.1.2-1.

Table 2.7.1.2-4 (2 of 7)

Design Commitment	Inspections, Tests, Analyses	Acceptance Criteria
4.a The ASME Code components identified in Table 2.7.1.2-2 retain their pressure boundary integrity at their design pressure.	4.a A hydrostatic test will be conducted on the as-built ASME Code components identified in Table 2.7.1.2-2 required to be hydrostatically tested by the ASME Section III.	4.a A report exists and concludes that the results of the hydrostatic test of the as-built ASME Code components identified in Table 2.7.1.2-2 conform with the ASME Section III requirements.
4.b The ASME Code piping identified in Table 2.7.1.2-1 retains its pressure boundary integrity at its design pressure.	4.b A hydrostatic test will be conducted on the as-built ASME Code piping identified in Table 2.7.1.2-1 required to be hydrostatically tested by the ASME Section III.	4.b A report exists and concludes that the results of the hydrostatic test of the as-built ASME Code piping identified in Table 2.7.1.2-1 conform with the ASME Section III requirements.
5.a The seismic Category I components and instruments identified in Tables 2.7.1.2-2 and 2.7.1.2-3, including the supports and anchorages, withstand seismic design basis loads without loss of safety function.	5.a.i Inspections will be performed to verify that the as-built seismic Category I components and instruments are located in the seismic Category I structure.	5.a.i The as-built seismic Category I components and instruments identified in Tables 2.7.1.2-2 and 2.7.1.2-3 are located in the seismic Category I structure.
	5.a.ii Type tests, analyses or a combination of type tests and analyses of seismic Category I components and instruments will be performed.	5.a.ii A report exists and concludes that the seismic Category I components and instruments identified in Tables 2.7.1.2-2 and 2.7.1.2-3 withstand Seismic design basis loads without loss of safety function.
	5.a.iii Inspections will be performed to verify that the as-built seismic Category I components and instruments, including the supports and anchorages, are seismically bounded by the tested or analyzed conditions.	5.a.iii A report exists and concludes that the as-built seismic Category I components and instruments identified in Tables 2.7.1.2-2 and 2.7.1.2-3, including the supports and anchorages, are seismically bounded by the tested or analyzed conditions.

Table 2.7.1.2-4 (3 of 7)

Design Commitment	Inspections, Tests, Analyses	Acceptance Criteria
5.b The seismic Category I piping, including supports, identified in Table 2.7.1.2-1 withstands seismic design basis loads without loss of safety function.	5.b.i Inspections will be performed to verify that the as-built seismic Category I piping, including supports, located in the seismic Category I structure(s).	5.b.i The as-built seismic Category I piping, including supports, identified in Table 2.7.1.2-1 is located in the seismic Category I structure(s).
	5.b.ii Inspections and analyses of the as-built seismic Category I piping, including supports, will be performed.	5.b.ii A report in accordance with ASME Section III requirements for safety-related SSCs and ASME B31.1 requirements for non-safety-related SSCs exists and concludes that the as-built seismic Category I piping, including supports, identified in Table 2.7.1.2-1 withstands seismic design basis loads without loss of safety function.
6.a The Class 1E components and instruments identified in Table 2.7.1.2-2 and 2.7.1.2-3 as being qualified for a harsh environment (and the associated wiring, cables, and terminations) withstand the environmental conditions that would exist before, during, and following a design basis accident without loss of safety function for the time required to perform the safety function.	6.a.i Type tests or a combination of type tests and analyses will be performed on Class 1E components and instruments located in a harsh environment.	6.a.i A report exists and concludes that the Class 1E components and instruments identified in Table 2.7.1.2-2 and 2.7.1.2-3 as being qualified for a harsh environment withstand the environmental conditions that would exist before, during, and following a design basis accident without loss of safety function for the time required to perform the safety function.

Table 2.7.1.2-4 (4 of 7)

Design Commitment	Inspections, Tests, Analyses	Acceptance Criteria
6.a (cont.)	6.a.ii Inspections will be performed on the as-built Class 1E components and instruments (and the associated wiring, cables, and terminations) located in a harsh environment.	6.a.ii A report exists and concludes that the as-built Class 1E components and instruments identified in Table 2.7.1.2-2 and 2.7.1.2-3 as being qualified for a harsh environment (and the associated wiring, cables, and terminations) are bounded by type tests, or a combination of type tests and analyses.
6.b Each of the Class 1E components and instruments identified in Table 2.7.1.2-2 and 2.7.1.2-3 is powered from its respective Class 1E division.	6.b Tests will be performed by providing a test signal in only one Class 1E division at a time.	6.b The test signal exists at the Class 1E components and instruments identified in Table 2.7.1.2-2 and 2.7.1.2-3 as being powered from the Class 1E division under test.
6.c Physical separation and electrical isolation are provided (1) between Class 1E divisions, and (2) between Class 1E divisions, and non-Class 1E divisions.	6.c Inspection of the as-built Class 1E divisions will be performed.	6.c Physical separation and electrical isolation exist in accordance with NRC RG 1.75 (1) between Class 1E divisions, and (2) between Class 1E divisions and non-Class 1E divisions.

Table 2.7.1.2-4 (5 of 7)

Design Commitment	Inspections, Tests, Analyses	Acceptance Criteria
7.a The MS system safety-related valves listed in Table 2.7.1.2-2 are functionally designed and qualified to perform their safety-related function under the full range of fluid flow, differential pressure, electrical, and temperature conditions up to and including design basis accident conditions.	7.a.i A type test or a combination of type test and analysis will be performed of the MS system safety-related valves.	7.a.i A Functional Qualification Report performed in conformance to ASME QME-1-2007, as accepted in Regulatory Guide 1.100 Revision 3, exists and concludes that the MS system safety-related valves listed in Table 2.7.1.2-2 are functionally designed and qualified to perform their safety-related function under the full range of fluid flow, differential pressure, electrical, and temperature conditions up to and including design basis accident conditions.
	7.a.ii A diagnostic stroke test and analysis will be performed of the MS system safety-related valves under preoperational temperature, differential pressure, and flow conditions.	7.a.ii Each MS system safety-related valve listed in Table 2.7.1.2-2 strokes fully open and fully closed by remote operation (or manual operation if a manually operated valve) under preoperational temperature, differential pressure, and flow conditions. Analysis based on sufficient diagnostic data demonstrates that the valves will perform at their design basis capability as established by the type test performed in accordance with 7.a.i.
7.b After loss of motive power, the MOVs, AOVs and electro-hydraulic valves, identified in Table 2.7.1.2-2, assume the indicated loss of motive power position.	7.b Tests of the as-built MOVs, AOVs and electro-hydraulic valves will be performed under the conditions of loss of motive power.	7.b Upon loss of motive power, each as-built MOV, AOV, or electro-hydraulic valve identified in Table 2.7.1.2-2 assumes the indicated loss of motive power position.

Table 2.7.1.2-4 (6 of 7)

Design Commitment		Inspections, Tests, Analyses		Acceptance Criteria	
8.a	Controls exist in the MCR to open and close the MOVs, AOVs and electro-hydraulic valves listed in Table 2.7.1.2-2.	8.a	Tests will be performed using the controls in the MCR to open and close the MOVs, AOVs and electro-hydraulic valves.	8.a	Controls in the as-built MCR open and close the MOVs, AOVs and electro-hydraulic valves listed in Table 2.7.1.2-2.
8.b	Controls exist in the RSR to open and close the MOVs, AOVs and electro-hydraulic valves listed in Table 2.7.1.2-2.	8.b	Tests will be performed using the controls in the RSR to open and close the MOVs, AOVs and electro-hydraulic valves.	8.b	Controls in the as-built RSR open and close the MOVs, AOVs and electro-hydraulic valves identified in Table 2.7.1.2-2.
8.c	Displays and alarms exist and are retrievable in the MCR as defined in Tables 2.7.1.2-2 and 2.7.1.2-3.	8.c	Inspections of the as-built displays and alarms in the MCR will be performed.	8.c	Displays and alarms exist and are retrieved in the as-built MCR as defined in Tables 2.7.1.2-2 and 2.7.1.2-3.
8.d	Displays and alarms exist and are retrievable in the RSR as defined in Tables 2.7.1.2-2 and 2.7.1.2-3.	8.d	Inspections of the as-built displays and alarms in the RSR will be performed.	8.d	Displays and alarms exist and are retrieved in the as-built RSR as defined in Tables 2.7.1.2-2 and 2.7.1.2-3.
9.	Each mechanical division of the MSS is physically separated from the other divisions.	9.	Inspections of the as-built mechanical divisions will be performed.	9.	Each mechanical division of the MSS is physically separated by a divisional wall that is a 3-hour rated fire barrier.
10.	The MSSVs, identified in the Table 2.7.1.2-2, provide overpressure protection for the secondary side of the steam generators and for pressure boundary components in the MSS.	10.a	Testing and analysis of the MSSVs, identified in Table 2.7.1.2-2, will be performed to confirm the requirement of the MSSV relief capacity in accordance with ASME Section III.	10.a	A report exists and concludes that the total rated capacity of the MSSVs identified in Table 2.7.1.2-2 is greater than or equal to 8.62×10^6 kg/hr (19×10^6 1b/hr) at a steam generator pressure of 92.81 kg/cm^{2}A (1,320 psia) (110 % of steam generator design pressure).
		10.b	Testing and analysis of the MSSVs, identified in Table 2.7.1.2-2, will be performed to confirm the requirement of the maximum capacity limit of each MSSV.	10.b	A report exists and concludes the maximum capacity limit of each MSSV is no greater than 0.907×10^6 kg/hr (2.0×10^6 lb/hr) at a steam generator pressure of 70.31 kg/cm^{2}A (1,000 psia).

Table 2.7.1.2-4 (7 of 7)

Design Commitment	Inspections, Tests, Analyses	Acceptance Criteria
10. (cont.)	10.c Testing and analysis of the MSSVs, identified in Table 2.7.1.2-2, will be performed to confirm each MSSV lift setpoint and MSSV relief capacity in accordance with ASME Section III.	10.c A report exists and concludes the lift setpoints of the MSSVs, identified in Table 2.7.1.2-2, are as follows: - First stage : 82.54 kg/cm^2 G (1,174 psig)±1% - Second stage: 84.72 kg/cm^2 G (1,205 psig)±1% - Third stage: 86.48 kg/cm^2 G (1,230 psig)±1%
11. The MSIVs and MSIV bypass valves identified in Table 2.7.1.2-2 close on receipt of an MSIS within the required response time.	11. Test will be performed using a simulated actuation signal of an MSIS under preoperational test conditions.	11. A report exists and concludes the as-built MSIVs and MSIV bypass valves close within the required response time (5 seconds) under preoperational test conditions.
12. The MS non-metallic parts, materials, and lubricants used in safety-related mechanical equipment perform their safety-related function up to the end of their qualified life in the design basis harsh environmental conditions (both internal service conditions and external environmental conditions) experienced during normal operations, anticipated operational occurrences, design-basis accidents, and post accident conditions.	12. A type test or a combination of type test and analysis will be performed of the MS non-metallic parts, materials, and lubricants used in safety-related mechanical equipment.	12. A report exists and concludes that the non-metallic parts, materials, and lubricants used in safety-related mechanical equipment listed in Table 2.7.1.2-2 perform their safety-related function up to the end of their qualified life under the design basis harsh environmental conditions (both internal service conditions and external environmental conditions) experienced during normal operations, anticipated operational occurrences, design-basis accidents, and post-accident conditions.

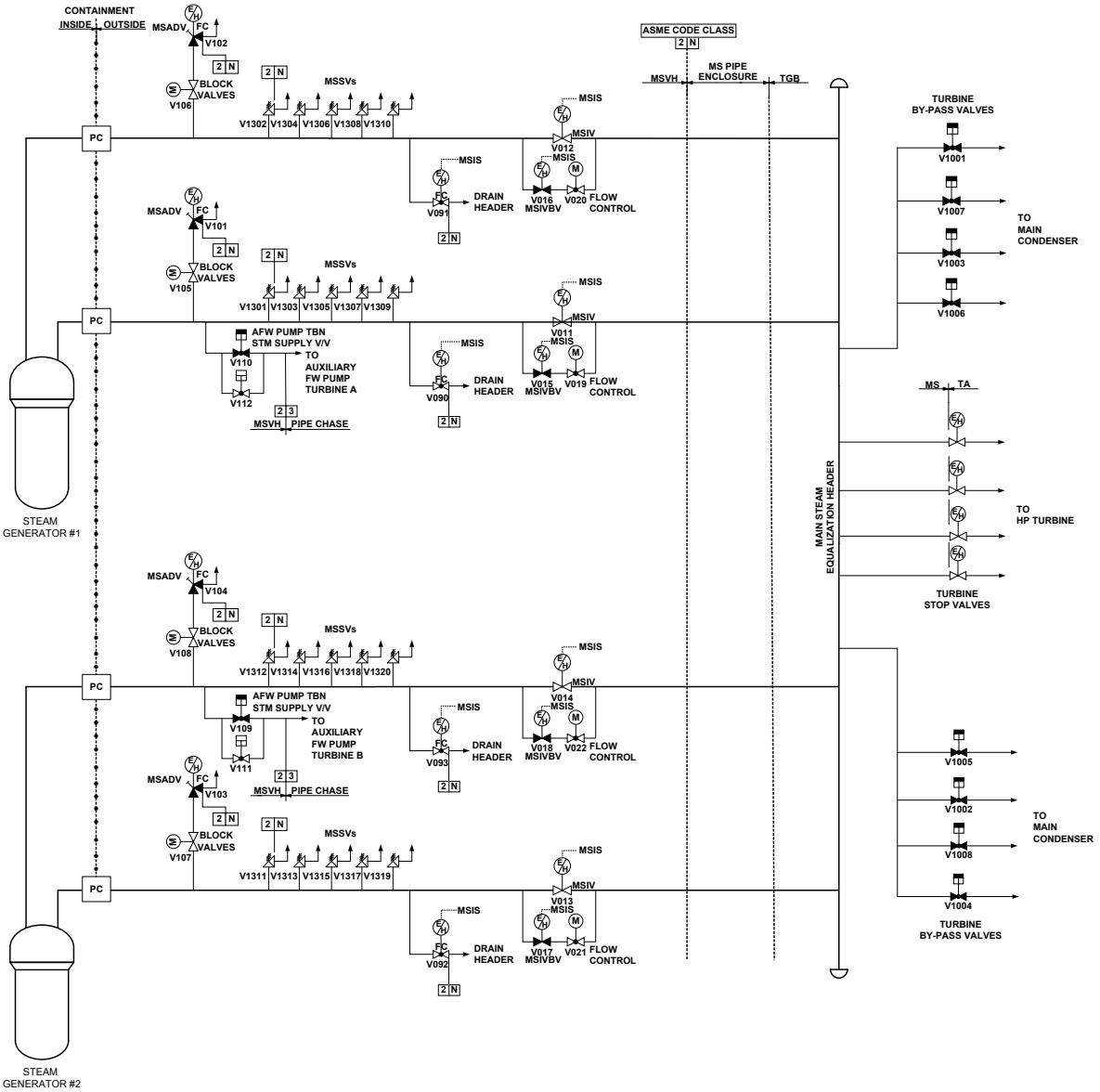

Figure 2.7.1.2-1 Main Steam System

2.7.1.3 Turbine Bypass System

No entry for this system.

2.7.1.4 Condensate and Feedwater System

2.7.1.4.1 Design Description

The condensate and feedwater system delivers feedwater from the condenser hotwells to the steam generators during startup, shutdown, normal operation, and hot standby operation.

The safety-related function of the feedwater system is to isolate feedwater to the steam generators after receipt of a main steam isolation signal (MSIS).

The safety-related portions of the feedwater system are located in the main steam valve house of the auxiliary building and reactor containment building. Non-safety-related portion is located in the turbine building.

The condensate and feedwater system is designed as follows:

1. The functional arrangement of the condensate and feedwater system is as described in the Design Description of Subsection 2.7.1.4.1 and in Table 2.7.1.4-1 and as shown in Figure 2.7.1.4-1.

2.a The ASME Code components identified in Table 2.7.1.4-2 are designed and constructed in accordance with ASME Section III requirements.

2.b The ASME code piping, including supports, identified in Table 2.7.1.4-1 is designed and constructed in accordance with ASME Section III requirements.

3.a Pressure boundary welds in ASME Code components identified in Table 2.7.1.4-2 meet ASME Section III requirements.

3.b Pressure boundary welds in ASME Code piping identified in Table 2.7.1.4-1 meet ASME Section III requirements.

4.a The ASME Code components identified in Table 2.7.1.4-2 retain their pressure boundary integrity at their design pressure.

4.b The ASME Code piping identified in Table 2.7.1.4-1 retains its pressure boundary integrity at its design pressure.

5.a The seismic Category I components and instruments identified in Tables 2.7.1.4-2 and 2.7.1.4-3, including the supports and anchorages, withstand seismic design basis loads without loss of safety function.

5.b The seismic Category I piping, including supports, identified in Table 2.7.1.4-1 withstands seismic design basis loads without loss of safety function.

6.a The Class 1E components and instruments identified in Tables 2.7.1.4-2 and 2.7.1.4-3 as being qualified for a harsh environment (and the associated wiring, cables, and terminations) withstand the environmental conditions that would exist before, during, and following a design basis accident without loss of safety function for the time required to perform the safety function.

6.b Each of the Class 1E components and instruments identified in Tables 2.7.1.4-2 and 2.7.1.4-3 is powered from its respective Class 1E division.

6.c Physical separation and electrical isolation are provided (1) between Class 1E divisions, and (2) between Class 1E divisions and non-Class 1E divisions.

7.a The CD and FW system safety-related valves are functionally designed and qualified to perform their safety-related function under the full range of fluid flow, differential pressure, electrical, and temperature conditions up to and including design basis accident conditions.

7.b After loss of motive power, AOVs and electro-hydraulic valves identified in Table 2.7.1.4-2 assume the indicated loss of motive power position.

8.a Controls exist in the MCR to open and close AOVs and electro-hydraulic valves identified in Table 2.7.1.4-2.

8.b Controls exist in the RSR to open and close AOVs and electro-hydraulic valves identified in Table 2.7.1.4-2.

8.c Displays and alarms exist and are retrievable in the MCR as defined in Tables 2.7.1.4-2 and 2.7.1.4-3.

8.d Displays and alarms exist and are retrievable in the RSR as defined in Tables 2.7.1.4-2 and 2.7.1.4-3.

9. The main feedwater isolation valves (MFIVs) close on receipt of an MSIS within the required response time.

10. The FW non-metallic parts, materials, and lubricants used in safety-related mechanical equipment perform their safety-related function up to the end of their qualified life in the design basis harsh environmental conditions (both internal service conditions and external environmental conditions) experienced during normal operations, anticipated operational occurrences, design-basis accidents, and post accident conditions.

2.7.1.4.2 Inspection, Tests, Analyses, and Acceptance Criteria

The inspections, tests, analyses, and associated acceptance criteria for the condensate and feedwater systems are specified in Table 2.7.1.4-4.

Table 2.7.1.4-1

Condensate and Feedwater System Equipment and Piping Location/Characteristics

Equipment and Piping Name	Location(1)	ASME Section III Class	Seismic Category
The portion of the piping from MSVH to S/G inlet including feedwater chemical injection line	RCB and MSVH	2	I
Main Feedwater Check Valve (outside containment)	MSVH	2	I
Main Feedwater Check Valve (inside containment)	RCB	2	I
Main Feedwater Isolation Valve (electro-hydraulic)	MSVH	2	I
Chemical Injection Valve (AOV)	MSVH	2	I
Chemical Injection Check Valve	MSVH	2	I

(1) RCB : Reactor Containment Building, MSVH : Main Steam Valve House

Table 2.7.1.4-2

Condensate and Feedwater System Components List

Component Name	Item No.	ASME Section III Class	Seismic Category	Class 1E/ Harsh Envir. Qual.	Control/ Display at MCR	Control/ Display at RSR	Control Signal	Active Safety Function	Loss of Motive Power Position
Main Feedwater Check Valve (outside Containment)	FW-V1035, V1039, V1042, V1046	2	I	-/Yes	No/No	No/No	-	Close	-
Main Feedwater Check Valve (inside Containment)	FW-V1036, V1037, V1040, V1043, V1044, V1047	2	I	-/Yes	No/No	No/No	-	Close	-
Main Feedwater Isolation Valve (Electro-Hydraulic)	FW-V121, V122, V123, V124, V131, V132, V133, V134	2	I	Yes/Yes	Yes/Yes	Yes/Yes	MSIS	Close	Close
Chemical Injection Valve (AOV)	FW-V138, V139	2	I	Yes/Yes	Yes/Yes	Yes/Yes	MSIS	Close	Close
Chemical Injection Check Valve	FW-V1050, V1052	2	I	-/Yes	No/No	No/No	-	Close	-

(1) Dash (-) indicates not applicable.

Table 2.7.1.4-3 (1 of 2)

Condensate and Feedwater System Instruments List

Instrument Name	Item No.	Location	ASME Section III Class	Seismic Category	Class 1E/ Harsh Envir. Qual.	Display/ Alarm at MCR	Display/ Alarm at RSR
S/G 1 Channel A Narrow Range Level	L-1111Y	RCB (1)	NNS	II	No/No	Yes/Yes	Yes/Yes
S/G 1 Channel A Narrow Range Level	L-1114A	RCB	3	I	Yes/Yes	Yes/Yes	Yes/Yes
S/G 1 Channel A Wide Range Level	L-1113A	RCB	3	I	Yes/Yes	Yes/Yes	Yes/Yes
S/G 1 Channel A Temp.	T-1113	RCB	NNS	II	No/No	Yes/No	Yes/No
S/G 1 Channel B Narrow Range Level	L-1114B	RCB	3	I	Yes/Yes	Yes/Yes	Yes/Yes
S/G 1 Channel B Wide Range Level	L-1115X	RCB	NNS	II	No/No	Yes/Yes	Yes/Yes
S/G 1 Channel B Wide Range Level	L-1113B	RCB	3	I	Yes/Yes	Yes/Yes	Yes/Yes
S/G 1 Channel B Temp.	T-1114	RCB	NNS	II	No/No	Yes/No	Yes/No
S/G 1 Channel C Narrow Range Level	L-1114C	RCB	3	I	Yes/Yes	Yes/Yes	Yes/Yes
S/G 1 Channel C Wide Range Level	L-1115Y	RCB	NNS	II	No/No	Yes/Yes	Yes/Yes
S/G 1 Channel C Wide Range Level	L-1113C	RCB	3	I	Yes/Yes	Yes/Yes	Yes/Yes
S/G 1 Channel C Temp.	T-1115	RCB	NNS	II	No/No	Yes/No	Yes/No
S/G 1 Channel D Narrow Range Level	L-1111X	RCB	NNS	II	No/No	Yes/Yes	Yes/Yes
S/G 1 Channel D Narrow Range Level	L-1114D	RCB	3	I	Yes/Yes	Yes/Yes	Yes/Yes
S/G 1 Channel D Wide Range Level	L-1113D	RCB	3	I	Yes/Yes	Yes/Yes	Yes/Yes
S/G 1 Channel D Temp.	T-1116	RCB	NNS	II	No/No	Yes/No	Yes/No

Table 2.7.1.4-3 (2 of 2)

Instrument Name	Item No.	Location	ASME Section III Class	Seismic Category	Class 1E/ Harsh Envir. Qual.	Display/ Alarm at MCR	Display/ Alarm at RSR
S/G 2 Channel A Narrow Range Level	L-1121Y	RCB	NNS	II	No/No	Yes/Yes	Yes/Yes
S/G 2 Channel A Narrow Range Level	L-1124A	RCB	3	I	Yes/Yes	Yes/Yes	Yes/Yes
S/G 2 Channel A Wide Range Level	L-1123A	RCB	3	I	Yes/Yes	Yes/Yes	Yes/Yes
S/G 2 Channel A Temp.	T-1123	RCB	NNS	II	No/No	Yes/No	Yes/No
S/G 2 Channel B Narrow Range Level	L-1124B	RCB	3	I	Yes/Yes	Yes/Yes	Yes/Yes
S/G 2 Channel B Wide Range Level	L-1125X	RCB	NNS	II	No/No	Yes/Yes	Yes/Yes
S/G 2 Channel B Wide Range Level	L-1123B	RCB	3	I	Yes/Yes	Yes/Yes	Yes/Yes
S/G 2 Channel B Temp.	T-1124	RCB	NNS	II	No/No	Yes/No	Yes/No
S/G 2 Channel C Narrow Range Level	L-1124C	RCB	3	I	Yes/Yes	Yes/Yes	Yes/Yes
S/G 2 Channel C Wide Range Level	L-1125Y	RCB	NNS	II	No/No	Yes/Yes	Yes/Yes
S/G 2 Channel C Wide Range Level	L-1123C	RCB	3	I	Yes/Yes	Yes/Yes	Yes/Yes
S/G 2 Channel C Temp.	T-1125	RCB	NNS	II	No/No	Yes/No	Yes/No
S/G 2 Channel D Narrow Range Level	L-1121X	RCB	NNS	II	No/No	Yes/Yes	Yes/Yes
S/G 2 Channel D Narrow Range Level	L-1124D	RCB	3	I	Yes/Yes	Yes/Yes	Yes/Yes
S/G 2 Channel D Wide Range Level	L-1123D	RCB	3	I	Yes/Yes	Yes/Yes	Yes/Yes
S/G 2 Channel D Temp.	T-1126	RCB	NNS	II	No/No	Yes/No	Yes/No

(1) RCB : Reactor Containment Building

Table 2.7.1.4-4 (1 of 6)

Condensate and Feedwater System ITAAC

Design Commitment	Inspections, Tests, Analyses	Acceptance Criteria
1. The functional arrangement of the condensate and feedwater system is as described in the Design Description of Subsection 2.7.1.4.1 and in Table 2.7.1.4-1 and as shown in Figure 2.7.1.4-1.	1. Inspection of the as-built condensate and feedwater system will be performed.	1. The as-built condensate and feedwater system conforms with the functional arrangement as described in the Design Description of Subsection 2.7.1.4.1 and in Table 2.7.1.4-1 and as shown in Figure 2.7.1.4-1
2.a The ASME Code components identified in Table 2.7.1.4-2 are designed and constructed in accordance with ASME Section III requirements.	2.a Inspection of the as-built ASME Code components identified in Table 2.7.1.4-2 will be performed and documented in the ASME data report(s).	2.a The ASME Section III data report(s) exist and conclude that the as-built ASME Code components identified in Table 2.7.1.4-2 are designed and constructed in accordance with ASME section III requirements.
2.b The ASME Code piping, including supports, identified in Table 2.7.1.4-1 is designed and constructed in accordance with ASME Section III requirements.	2.b Inspection of the as-built ASME Code piping, including supports, identified in Table 2.7.1.4-1 will be performed and documented in the ASME data report(s).	2.b The ASME Section III data report(s) exist and conclude that the as-built ASME Code piping, including supports, identified in Table 2.7.1.4-1 is designed and constructed in accordance with ASME Section III requirements.
3.a Pressure boundary welds in ASME Code components identified in Table 2.7.1.4-2 meet ASME Section III requirements.	3.a Inspections of the as-built pressure boundary welds in ASME Code components identified in Table 2.7.1.4-2 will be performed in accordance with the ASME Section III.	3.a A report exists and concludes that the ASME Section III requirements are met for non-destructive examination of the as-built pressure boundary welds in ASME Code components identified in Table 2.7.1.4-2.

Table 2.7.1.4-4 (2 of 6)

Design Commitment		Inspections, Tests, Analyses		Acceptance Criteria	
3.b	Pressure boundary welds in ASME Code piping identified in Table 2.7.1.4-1 meet ASME Section III requirements.	3.b	Inspections of the as-built pressure boundary welds in ASME Code piping identified in Table 2.7.1.4-1 will be performed in accordance with the ASME Section III.	3.b	A report exists and concludes that the ASME Section III requirements are met for non-destructive examination of the as-built pressure boundary welds in ASME Code piping identified in Table 2.7.1.4-1.
4.a	The ASME Code components identified in Table 2.7.1.4-2 retain their pressure boundary integrity at their design pressure.	4.a	A hydrostatic test will be conducted on the as-built ASME Code components identified in Table 2.7.1.4-2 required to be hydrostatically tested by the ASME Section III.	4.a	A report exists and concludes that the results of the hydrostatic test of the as-built ASME Code components identified in Table 2.7.1.4-2 conform with ASME Section III requirements.
4.b	The ASME Code piping identified in Table 2.7.1.4-1 retains its pressure boundary integrity at its design pressure.	4.b	A hydrostatic test will be conducted on the as-built ASME Code piping identified in Table 2.7.1.4-1 required to be hydrostatically tested by the ASME Section III.	4.b	A report exists and concludes that the results of the hydrostatic test of the as-built ASME Code piping identified in Table 2.7.1.4-1 conform with ASME Section III requirements.
5.a	The seismic Category I components and instruments identified in Table 2.7.1.4-2 and 2.7.1.4-3, including the supports and anchorages, withstand seismic design basis loads without loss of safety function.	5.a.i	Inspections will be performed to verify that the as-built seismic Category I components and instruments are located in the seismic Category I structure.	5.a.i	The as-built seismic Category I components and instruments identified in Table 2.7.1.4-2 and 2.7.1.4-3 are located in the seismic Category I structure.
		5.a.ii	Type tests, analyses or a combination of type tests and analyses of seismic Category I components and instruments will be performed.	5.a.ii	A report exists and concludes that the seismic Category I components and instruments identified in Table 2.7.1.4-2 and 2.7.1.4-3 withstand seismic design basis loads without loss of safety function.

Table 2.7.1.4-4 (3 of 6)

Design Commitment	Inspections, Tests, Analyses	Acceptance Criteria
5.a (cont.)	5.a.iii Inspections will be performed to verify that the as-built seismic Category I components and instruments, including the supports and anchorages, are seismically bounded by the tested or analyzed conditions.	5.a.iii A report exists and concludes that the as-built seismic Category I components and instruments identified in Table 2.7.1.4-2 and 2.7.1.4-3, including the supports and anchorages, are seismically bounded by the tested or analyzed conditions.
5.b The seismic Category I piping, including supports, identified in Table 2.7.1.4-1 withstands seismic design basis loads without loss of safety function.	5.b.i Inspections will be performed to verify that the as-built seismic Category I piping, including supports, is located in the seismic Category I structures.	5.b.i The as-built seismic Category I piping, including supports, identified in Table 2.7.1.4-1 is located in the seismic Category I structures.
	5.b.ii Inspections and analyses of the as-built seismic Category I piping, including supports, will be performed.	5.b.ii A report exists and concludes that the as-built seismic Category I piping, including supports, identified in Table 2.7.1.4-1 withstands seismic design basis loads without loss of safety function.
6.a The Class 1E components and instruments identified in Tables 2.7.1.4-2 and 2.7.1.4-3 as being qualified for a harsh environment (and the associated wiring, cables, and terminations) withstand the environmental conditions that would exist before, during, and following a design basis accident without loss of safety function for the time required to perform the safety function.	6.a.i Type tests or a combination of type tests and analyses will be performed on Class 1E components and instruments located in a harsh environment.	6.a.i A report exists and concludes that the Class 1E components and instruments identified in Tables 2.7.1.4-2 and 2.7.1.4-3 as being qualified for a harsh environment withstand the environmental conditions that would exist before, during, and following a design basis accident without loss of safety function for the time required to perform the safety function.

Table 2.7.1.4-4 (4 of 6)

Design Commitment	Inspections, Tests, Analyses	Acceptance Criteria
6.a (cont.)	6.a.ii Inspections will be performed on the as-built Class 1E components and instruments (and the associated wiring, cables, and terminations) located in a harsh environment.	6.a.ii A report exists and concludes that the as-built Class 1E components and instruments identified in Tables 2.7.1.4-2 and 2.7.1.4-3 as being qualified for a harsh environment (and the associated wiring, cables, and terminations) are bounded by type tests or a combination of type tests and analyses.
6.b Each of the Class 1E components and instruments identified in Tables 2.7.1.4-2 and 2.7.1.4-3 is powered from its respective Class 1E division.	6.b Tests will be performed by providing a test signal in only one Class 1E division at a time.	6.b The test signal exists at the Class 1E components and instruments identified in Table 2.7.1.4-2 and 2.7.1.4-3 as being powered from the Class 1E division under test.
6.c Physical separation and electrical isolation are provided (1) between Class 1E divisions, and (2) between Class 1E divisions and non-Class 1E divisions.	6.c Inspection of the as-built Class 1E divisions will be performed.	6.c Physical separation and electrical isolation exist in accordance with NRC RG 1.75 (1) between Class 1E divisions, and (2) between Class 1E divisions and non-Class 1E divisions.
7.a The CD and FW system safety-related valves are functionally designed and qualified to perform their safety-related function under the full range of fluid flow, differential pressure, electrical, and temperature conditions up to and including design basis accident conditions.	7.a.i A type test or a combination of type test and analysis will be performed of the CD and FW system safety-related valves.	7.a.i A Functional Qualification Report performed in conformance to ASME QME-1-2007, as accepted in Regulatory Guide 1.100 Revision 3, exists and concludes that the CD and FW system safety-related valves listed in Table 2.7.1.4-2 are functionally designed and qualified to perform their safety-related function under the full range of fluid flow, differential pressure, electrical, and temperature conditions up to and including design basis accident conditions.

Table 2.7.1.4-4 (5 of 6)

Design Commitment	Inspections, Tests, Analyses	Acceptance Criteria
7.a (cont.)	7.a.ii A diagnostic stroke test and analysis will be performed of the CD and FW system safety-related valves under preoperational temperature, differential pressure, and flow conditions.	7.a.ii Each CD and FW system safety-related valve listed in Table 2.7.1.4-2 strokes fully open and fully closed by remote operation (or manual operation if a manually operated valve) under preoperational temperature, differential pressure, and flow conditions. Analysis based on sufficient diagnostic data demonstrates that the valves will perform at their design basis capability as established by the type test performed in accordance with 7.a.i.
	7.a.iii Tests of the as-built check valves will be performed under pre-operational test pressure, temperature, and fluid flow conditions.	7.a.iii Each check valve changes position as indicated in Table 2.7.1.4-2 under pre-operational test pressure, temperature, and fluid flow conditions.
7.b After loss of motive power, AOVs and electro-hydraulic valves identified in Table 2.7.1.4-2 assume the indicated loss of motive power position.	7.b Test of the as-built AOVs and electro-hydraulic valves will be performed under the conditions of loss of motive power.	7.b Upon loss of motive power, each as-built AOV or electro-hydraulic valve identified in Table 2.7.1.4-2 assumes the indicated loss of motive power position.
8.a Controls exist in the MCR to open and close AOVs and electro-hydraulic valves identified in Table 2.7.1.4-2.	8.a Tests will be performed using the controls in the MCR to open and close AOVs and electro-hydraulic valves.	8.a Controls in the as-built MCR open and close AOVs and electro-hydraulic valves identified in Table 2.7.1.4-2.

Table 2.7.1.4-4 (6 of 6)

Design Commitment		Inspections, Tests, Analyses		Acceptance Criteria	
8.b	Controls exist in the RSR to open and close AOVs and electro-hydraulic valves identified in Table 2.7.1.4-2.	8.b	Tests will be performed using the controls in the RSR to open and close AOVs and electro-hydraulic valves.	8.b	Controls in the as-built RSR open and close AOVs and electro-hydraulic valves identified in Table 2.7.1.4-2.
8.c	Displays and alarms exist and are retrievable in the MCR as defined in Tables 2.7.1.4-2 and 2.7.1.4-3.	8.c	Inspections of the as-built displays and alarms in the MCR will be performed.	8.c	Displays and alarms exist and are retrieved in the as-built MCR as defined in Tables 2.7.1.4-2 and 2.7.1.4-3.
8.d	Displays and alarms exist and are retrievable in the RSR as defined in Tables 2.7.1.4-2 and 2.7.1.4-3.	8.d	Inspections of the as-built displays and alarms in the RSR will be performed.	8.d	Displays and alarms exist and are retrieved in the as-built RSR as defined in Tables 2.7.1.4-2 and 2.7.1.4-3.
9.	The main feedwater isolation valves (MFIVs) close on receipt of an MSIS within the required response time.	9.	Test will be performed using a simulated actuation signal of an MSIS.	9.	A report exists and concludes the as-built MFIVs close within the required response time after receipt of an MSIS simulated actuation signal.
10.	The FW non-metallic parts, materials, and lubricants used in safety-related mechanical equipment perform their safety-related function up to the end of their qualified life in the design basis harsh environmental conditions (both internal service conditions and external environmental conditions) experienced during normal operations, anticipated operational occurrences, design-basis accidents, and post accident conditions.	10.	A type test or a combination of type test and analysis will be performed of the FW non-metallic parts, materials, and lubricants used in safety-related mechanical equipment.	10.	A report exists and concludes that the non-metallic parts, materials, and lubricants used in safety-related mechanical equipment listed in Table 2.7.1.4-2 perform their safety-related function up to the end of their qualified life under the design basis harsh environmental conditions (both internal service conditions and external environmental conditions) experienced during normal operations, anticipated operational occurrences, design-basis accidents, and post accident conditions.

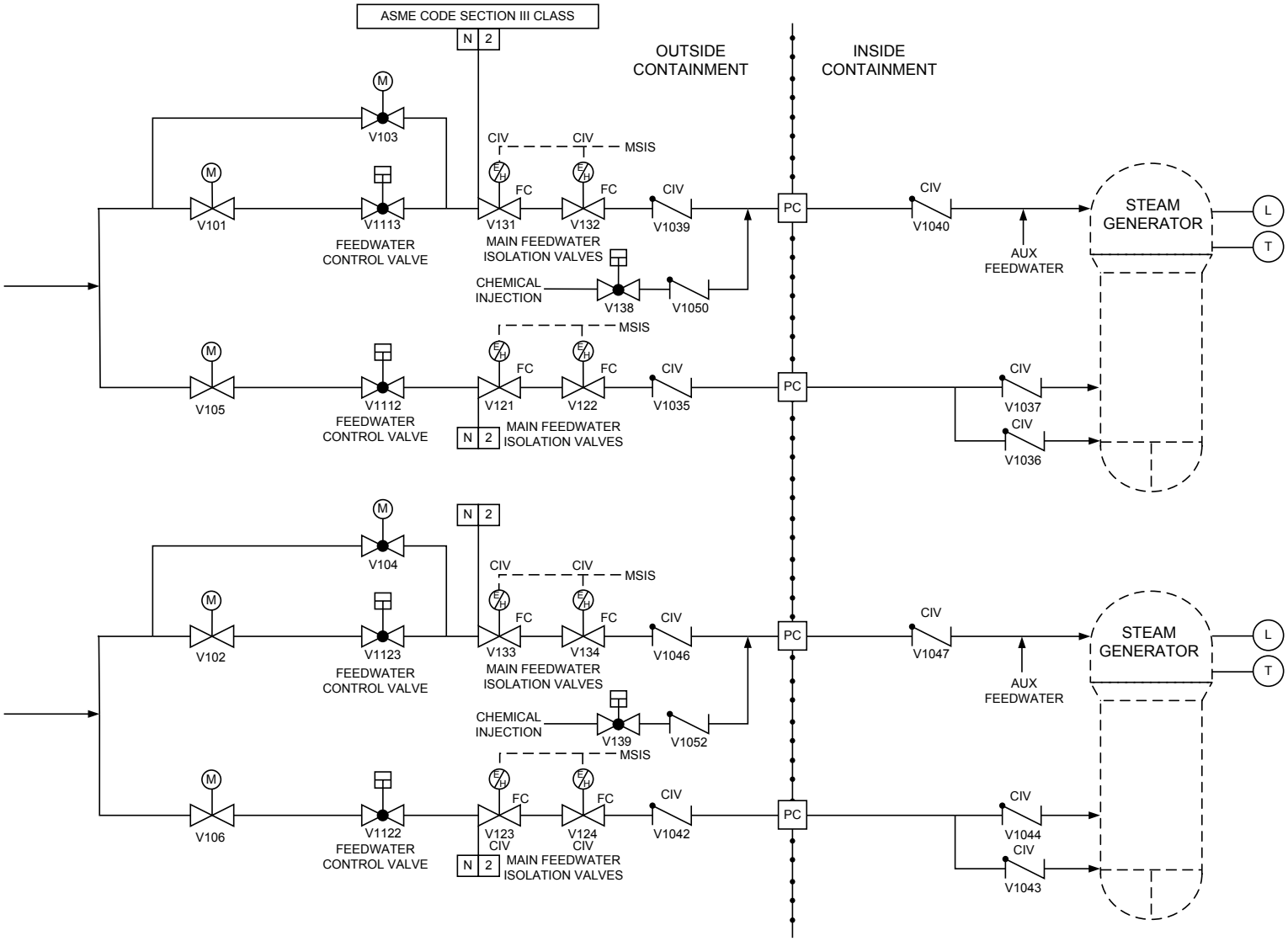

Figure 2.7.1.4-1 Condensate and Feedwater System

2.7.1.5 Auxiliary Feedwater System

2.7.1.5.1 Design Description

The auxiliary feedwater system (AFWS) is a safety-related system. The AFWS supplies auxiliary feedwater (AFW) to the steam generators for removal of residual heat from the reactor core when the feedwater system is inoperable for transient condition or postulated accidents.

The AFWS is designed to be either manually actuated or automatically actuated by an auxiliary feedwater actuation signal (AFAS) from the engineered safety feature actuation system (ESFAS) or diverse protection system (DPS).

AFW flow to the affected steam generator is terminated manually by operator action within 30 minutes after the initiation of the secondary side pipe rupture event.

The AFWS is located within the auxiliary building and containment.

The AFWS consists of two 100 percent capacity motor-driven pumps, two 100 percent capacity turbine-driven pumps, two 100 percent auxiliary feedwater storage tanks (AFWSTs), valves, two cavitating flow-limiting venturis, and instrumentation. One motor-driven pump and one turbine-driven pump are configured into one mechanical division and joined together inside containment to feed their respective steam generator through a common auxiliary feedwater (AFW) header which connects to the steam generator downcomer feedwater line. Each common AFW header contains a cavitating venturi to restrict the maximum AFW flow rate to each steam generator.

The functional requirements of the AFWS are designed as follows:

1. The functional arrangement of the AFWS is as described in the Design Description of Subsection 2.7.1.5.1 and in Table 2.7.1.5-1 and as shown in Figure 2.7.1.5-1.

2.a The ASME Code components identified in Table 2.7.1.5-2 are designed and constructed in accordance with ASME Section III requirements.

2.b The ASME Code piping, including supports, identified in Table 2.7.1.5-1 is designed and constructed in accordance with ASME Section III requirements.

3.a Pressure boundary welds in ASME Code components identified in Table 2.7.1.5-2 meet ASME Section III requirements.

3.b Pressure boundary welds in ASME Code piping identified in Table 2.7.1.5-1 meet ASME Section III requirements.

4.a The ASME Code components identified in Table 2.7.1.5-2 retain their pressure boundary integrity at their design pressure.

4.b The ASME Code piping identified in Table 2.7.1.5-1 retains its pressure boundary integrity at its design pressure.

5.a The seismic Category I components and instruments identified in Tables 2.7.1.5-2 and 2.7.1.5-3, including the supports and anchorages, withstand seismic design basis loads without loss of safety function.

5.b The seismic Category I piping, including supports, identified in Table 2.7.1.5-1 withstand seismic design basis loads without loss of safety function.

6.a The Class 1E components and instruments identified in Tables 2.7.1.5-2 and 2.7.1.5-3 as being qualified for a harsh environment (and the associated wiring, cables, and terminations) withstand the environmental conditions that would exist before, during, and following a design basis accident without loss of safety function for the time required to perform the safety function.

6.b Each of the Class 1E components and instruments identified in Tables 2.7.1.5-2 and 2.7.1.5-3 is powered from its respective Class 1E division.

6.c Physical separation and electrical isolation are provided (1) between Class 1E divisions, and (2) between Class 1E divisions and non-Class 1E divisions.

7.a The AFW system safety-related valves are functionally designed and qualified to perform their safety-related function under the full range of fluid flow, differential pressure, electrical, and temperature conditions up to and including design basis accident conditions.

7.b After loss of motive power, MOVs, AOVs, and SOVs indicated in Table 2.7.1.5-2 assume the indicated loss of motive power position.

8.a Controls exist in the MCR to start and stop the AFW pumps, and to open and close the MOVs, AOVs, and SOVs identified in Table 2.7.1.5-2.

8.b Controls exist in the RSR to start and stop the AFW pumps, and to open and close the MOVs, AOVs, and SOVs identified in Table 2.7.1.5-2.

8.c Displays and alarms exist and are retrievable in the MCR as defined in Tables 2.7.1.5-2 and 2.7.1.5-3.

8.d Displays and alarms exist and are retrievable in the RSR as defined in Tables 2.7.1.5-2 and 2.7.1.5-3.

9. The two mechanical divisions of the AFWS (A/C & B/D) are physically separated.

10.a The AFW pumps have sufficient net positive suction head (NPSH).

10.b Each AFWST has sufficient capacity for eight hours of operation at hot standby condition and for subsequent cooldown of the reactor coolant system within six hours to condition that permit operation of the shutdown cooling system.

10.c The AFW system safety-related pumps are functionally designed and qualified to perform their safety-related function under the full range of fluid flow, differential pressure, electrical, and temperature conditions up to and including design basis accident conditions.

11.a The AFWS is actuated by an auxiliary feedwater actuation signal (AFAS) from the ESFAS or DPS.

11.b The ESF-CCS includes logic to close the AFW isolation valves when SG water level has risen above a high level setpoint, and to re-open the AFW isolation valves when SG water level drops below a low level setpoint.

12.a Each AFW pump delivers the minimum flow to its respective steam generator for removal of core decay heat against a steam generator feedwater nozzle pressure.

12.b The cavitating flow-limiting venturis limit the maximum flow to each steam generator with both AFW pumps running in the division against a steam generator pressure.

13. The AF non-metallic parts, materials, and lubricants used in safety-related mechanical equipment perform their safety-related function up to the end of their qualified life in the design basis harsh environmental conditions (both internal service conditions and external environmental conditions) experienced during normal operations, anticipated operational occurrences, design-basis accidents, and post accident conditions.

2.7.1.5.2 Inspection, Tests, Analyses, and Acceptance Criteria

Table 2.7.1.5-4 specifies the inspections, tests, analyses, and associated acceptance criteria for the AFWS.

Table 2.7.1.5-1 (1 of 2)

Auxiliary Feedwater System Equipment and Piping Location/Characteristics

Equipment and Piping Name	Location	ASME Section III Class	Seismic Category
AFW motor driven pump	AB (1)	3	I
AFW turbine driven pump	AB	3	I
AFW modulating valve (SOV)	AB	3	I
AFW isolation valve (MOV)	AB	2	I
AFW pump discharge check valve	AB	3	I
AFW isolation check valve	RCB (2)	2	I
AFW miniflow check valve	AB	3	I
Chemical injection check valve	AB	3	I
AFW pump turbine steam isolation valve (AOV)	AB	3	I
AFW pump turbine steam line drain valve (AOV)	AB	3	I
Main steam supply check valve	AB	3	I
Auxiliary steam supply check valve	AB	3	I
Auxiliary Feedwater Storage Tank	AB	-	I
AFWST makeup line up to and including AFWST inlet manual valve	AB	3	I
AFW pump suction line from AFWST (AX-TK01A) to AFW pumps (AFW-PP01A, AFW-PP02A)	AB	3	I
AFW pump suction line from AFWST (AX-TK01A) to AFW pumps (AFW-PP01B, AFW-PP02B)	AB	3	I
AFWST cross connection line up to and including AFWST connection manual valve	AB	3	I
Non-safety backup supply line up to and including AFW pump suction manual valve	AB	3	I
Motor-driven AFW pump A (AFW-PP02A) discharge line up to and excluding AFW isolation valve	AB	3	I
Motor-driven AFW pump B (AFW-PP02B) discharge line up to and excluding AFW isolation valve	AB	3	I
Turbine-driven AFW pump C (AFW-PP01A) discharge line up to and excluding AFW isolation valve	AB	3	I
Turbine-driven AFW pump D (AFW-PP01B) discharge line up to and excluding AFW isolation valve	AB	3	I

Table 2.7.1.5-1 (2 of 2)

Equipment and Piping Name	Location	ASME Section III Class	Seismic Category
Motor-driven AFW pump A (AFW-PP02A) Recirculation line to AFWST	AB	3	I
Motor-driven AFW pump B (AFW-PP02B) Recirculation line to AWST	AB	3	I
Turbine-driven AFW pump C (AFW-PP01A) Recirculation line to AFWST	AB	3	I
Turbine-driven AFW pump D (AFW-PP01B) Recirculation line to AFWST	AB	3	I
Turbine-driven AFW pump C (AFW-PP01A) turbine steam inlet line up to and including AFW steam supply check valve (AT-V1022A)	AB	3	I
Turbine-driven AFW pump D (AFW-PP01B) turbine steam inlet line up to and including AFW steam supply check valve (AT-V1022B)	AB	3	I
Auxiliary steam inlet line up to and including Turbine-driven AFW pump C (AFW-PP01A) manual isolation valve	AB	3	I
Auxiliary steam inlet line up to and including Turbine-driven AFW pump D (AFW-PP01B) manual isolation valve	AB	3	I
Turbine-driven AFW pump C (AFW-PP01A) turbine steam inlet drain line up to and including AFW pump turbine steam inlet drain line manual isolation valve	AB	3	I
Turbine-driven AFW pump D (AFW-PP01B) turbine steam inlet drain line up to and including AFW pump turbine steam inlet drain line manual isolation valve	AB	3	I

(1) AB : Auxiliary Building
(2) RCB : Reactor Containment Building

Table 2.7.1.5-2 (1 of 2)

Auxiliary Feedwater System Components List

Component Name	Item No.	ASME Section III Class	Seismic Category	Class 1E/ Harsh Envir. Qual.	Control/ Display at MCR	Control/ Display at RSR	Control Signal	Active Safety Function	Loss of Motive Power Position
AFW motor driven pump	AFW-PP02A/B	3	I	Yes/Yes	Yes/Yes	Yes/Yes	AFAS	Start	-
AFW turbine driven pump	AFW-PP01A/B	3	I	Yes/Yes	Yes/Yes	Yes/Yes	-	Start	-
AFW modulating valve (SOV)	AFW-V035~038	3	I	Yes/Yes	Yes/Yes	Yes/Yes	AFAS	Control the SG water level	Open
AFW isolation valve (MOV)	AFW-V043~046	2	I	Yes/Yes	Yes/Yes	Yes/Yes	AFAS	Open/Close	As is
AFW pump discharge check valve (CV)	AFW-V1003A/B AFW-V-1004A/B	3	I	-/Yes	-/-	-	-	Open/Close	-
AFW isolation check valve (CV)	AFW-V1007A/B AFW-V-1008A/B	2	I	-/Yes	-/-	-	-	Open/Close	-
AFW miniflow check valve (CV)	AFW-V1012A/B AFW-V1014A/B	3	I	-/Yes	-/-	-	-	Open/Close	-

Table 2.7.1.5-2 (2 of 2)

Component Name	Item No.	ASME Section III Class	Seismic Category	Class 1E/ Harsh Envir. Qual.	Control/ Display at MCR	Control/ Display at RSR	Control Signal	Active Safety Function	Loss of Motive Power Position
Chemical injection check valve (CV)	AFW-V1022A/B AFW-V1024A/B	3	I	-/Yes	-/-	-	-	Open/Close	-
AFW pump turbine steam isolation valve (AOV)	AT-V009/010	3	I	Yes/Yes	Yes/Yes	Yes/Yes	AFAS	Open/Close	Open
AFW pump turbine steam line drain valve (AOV)	AT-V007/008	3	I	Yes/Yes	Yes/Yes	Yes/Yes	-	Open/Close	Open
Main steam supply check valve (CV)	AT-V1020A/B	3	I	- /Yes	-/-	-	-	Open/Close	-
Auxiliary steam supply check valve (CV)	AT-V1022A/B	3	I	-/Yes	-/-	-	-	Open/Close	-
AFWST makeup check valve (CV)	AFW-V1600	-	II	-/No	-/-	-	-	Open/Close	-
Auxiliary feedwater storage tank	AX-TK01A/B	-	I	-/Yes	-/-	-	-	No	-

(1) Dash(-) indicates not applicable.

Table 2.7.1.5-3

Auxiliary Feedwater System Instruments List

Instrument Name	Item No.	Location	ASME Section III Class	Seismic Category	Class 1E/ Harsh Envir. Qual.	Display/ Alarm at MCR	Display/ Alarm at RSR
AFW pump turbine speed	S-3035C/3036D	AB (1)	3	I	Yes/Yes	Yes/No	Yes/No
AFW pump suction pressure	P-0005A, 0006B, 0007C, 0008D	AB	3	I	Yes/Yes	Yes/Yes	Yes/Yes
AFW pump discharge pressure	P-0023A, 0024B, 0025C, 0026D	AB	3	I	Yes/Yes	Yes/Yes	Yes/Yes
AFW flow modulating valve position	Z-0035A, 0036B, 0037C, 0038D	AB	3	I	Yes/Yes	Yes/Yes	Yes/Yes
AFW flow to S/G	F-0047A, 0048B, 0049C, 0050D	AB	3	I	Yes/Yes	Yes/No	Yes/No
AFW line back leakage temperature	T-0053A/C, 0054B/D	RCB (2)	3	I	Yes/Yes	Yes/Yes	Yes/Yes
AFW turbine steam drip leg level	L-0003C, 0004D	AB	3	I	Yes/Yes	Yes/Yes	Yes/Yes
AFW turbine inlet steam pressure	P-0013C, 0014D	AB	3	I	Yes/Yes	Yes/No	Yes/No
Auxiliary feedwater storage tank water level	L-003A, 006B/C/D, 004B, 005A/C/D	AB	3	I	Yes/Yes	Yes/Yes	Yes/Yes

(1) AB : Auxiliary Building

(2) RCB : Reactor Containment Building

Table 2.7.1.5-4 (1 of 9)

Auxiliary Feedwater System ITAAC

Design Commitment	Inspections, Tests, Analyses	Acceptance Criteria
1. The functional arrangement of the AFWS is as described in the Design Description of Subsection 2.7.1.5.1 and in Table 2.7.1.5-1 and as shown in Figure 2.7.1.5-1.	1. Inspection of the as-built AFWS will be conducted.	1. The as-built AFWS conforms with the functional arrangement as described in the Design Description of Subsection 2.7.1.5.1 and in Table 2.7.1.5-1 and as shown in Figure 2.7.1.5-1.
2.a The ASME Code components identified in Table 2.7.1.5-2 are designed and constructed in accordance with ASME Section III requirements.	2.a Inspection of the as-built ASME Code components identified in Table 2.7.1.5-2 will be performed and documented in the ASME data report(s).	2.a The ASME Section III data report(s) exist and conclude that the as-built ASME Code components identified in Table 2.7.1.5-2 are designed and constructed in accordance with ASME Section III requirements.
2.b The ASME Code piping, including supports, identified in Table 2.7.1.5-1 is designed and constructed in accordance with ASME Section III requirements.	2.b Inspection of the as-built ASME Code piping, including supports, identified in Table 2.7.1.5-1 will be performed and documented in the ASME data report(s).	2.b The ASME Section III data report(s) exist and conclude that the as-built ASME Code piping, including supports, identified in Table 2.7.1.5-1 is designed and constructed in accordance with ASME Section III requirements.
3.a Pressure boundary welds in ASME Code components identified in Table 2.7.1.5-2 meet ASME Section III requirements.	3.a Inspections of the as-built pressure boundary welds in ASME Code components identified in Table 2.7.1.5-2 will be performed in accordance with the ASME Section III.	3.a A report exists and concludes that the ASME Section III requirements are met for non-destructive examination of the as-built pressure boundary welds in ASME Code components identified in Table 2.7.1.5-2.
3.b Pressure boundary welds in ASME Code piping identified in Table 2.7.1.5-1 meet ASME Section III requirements.	3.b Inspections of the as-built pressure boundary welds in ASME Code piping identified in Table 2.7.1.5-1 will be performed in accordance with the ASME Section III.	3.b A report exists and concludes that the ASME Section III requirements are met for non-destructive examination of the as-built pressure boundary welds in ASME Code piping identified in Table 2.7.1.5-1.

Table 2.7.1.5-4 (2 of 9)

Design Commitment	Inspections, Tests, Analyses	Acceptance Criteria
4.a The ASME Code components identified in Table 2.7.1.5-2 retain their pressure boundary integrity at their design pressure.	4.a A hydrostatic test will be conducted on the as-built ASME Code components identified in Table 2.7.1.5-2 required to be hydrostatically tested by the ASME Section III.	4.a A report exists and concludes that the results of the hydrostatic test of the as-built ASME Code components identified in Table 2.7.1.5-2 conform with ASME Section III requirements.
4.b The ASME Code piping identified in Table 2.7.1.5-1 retains its pressure boundary integrity at its design pressure.	4.b A hydrostatic test will be conducted on the as-built ASME Code piping identified in Table 2.7.1.5-1 piping required to be hydrostatically tested by the ASME Section III.	4.b A report exists and concludes that the results of the hydrostatic test of the as-built ASME Code piping identified in Table 2.7.1.5-1 conform with ASME Section III requirements.
5.a The seismic Category I components and instruments identified in Tables 2.7.1.5-2 and 2.7.1.5-3, including the supports and anchorages, withstand seismic design basis loads without loss of safety function.	5.a.i Inspections will be performed to verify that the as-built seismic Category I components and instruments are located in the seismic Category I structure.	5.a.i The as-built seismic Category I components and instruments identified in Tables 2.7.1.5-2 and 2.7.1.5-3 are located in the seismic Category I structure.
	5.a.ii Type tests, analyses, or a combination of type tests and analyses of seismic Category I components and instruments will be performed.	5.a.ii A report exists and concludes that the seismic Category I components and instruments identified in Tables 2.7.1.5-2 and 2.7.1.5-3 withstand seismic design basis loads without loss of safety function.
	5.a.iii Inspections will be performed to verify that the as-built seismic Category I components and instruments, including the supports and anchorages, are seismically bounded by the tested or analyzed conditions.	5.a.iii A report exists and concludes that the as-built seismic Category I components and instruments identified in Tables 2.7.1.5-2 and 2.7.1.5-3, including the supports and anchorages, are seismically bounded by the tested or analyzed conditions.

Table 2.7.1.5-4 (3 of 9)

Design Commitment	Inspections, Tests, Analyses	Acceptance Criteria
5.b The seismic Category I piping, including supports, identified in Table 2.7.1.5-1 withstand seismic design basis loads without loss of safety function.	5.b.i Inspections will be performed to verify that the as-built seismic Category I piping, including supports, is located in the seismic Category I structure(s).	5.b.i The as-built seismic Category I piping, including supports, identified in Table 2.7.1.5-1 is located in the seismic Category I structure(s).
	5.b.ii Inspections and analyses of the as-built seismic Category I piping, including supports, will be performed.	5.b.ii A report exists and concludes that the as-built seismic Category I piping, including supports, identified in Table 2.7.1.5-1 withstand seismic design basis loads without loss of safety function.
6.a The Class 1E components and instruments identified in Tables 2.7.1.5-2 and 2.7.1.5-3 as being qualified for a harsh environment (and the associated wiring, cables, and terminations) withstand the environmental conditions that would exist before, during, and following a design basis accident without loss of safety function for the time required to perform the safety function.	6.a.i Type tests or a combination of type tests and analyses will be performed on Class 1E components and instruments located in a harsh environment.	6.a.i A report exists and concludes that the Class 1E components and instruments identified in Tables 2.7.1.5-2 and 2.7.1.5-3 as being qualified for a harsh environment withstand the environmental conditions that would exist before, during, and following a design basis accident without loss of safety function for the time required to perform the safety function.
	6.a.ii Inspection will be performed on the as-built Class 1E components and instruments (and the associated wiring, cables, and terminations) located in a harsh environment.	6.a.ii A report exists and concludes that the as-built Class 1E components and instruments identified in Tables 2.7.1.5-2 and 2.7.1.5-3 as being qualified for a harsh environment (and the associated wiring, cables, and terminations) are bounded by type tests or a combination of type tests and analyses.

Table 2.7.1.5-4 (4 of 9)

Design Commitment	Inspections, Tests, Analyses	Acceptance Criteria
6.b Each of the Class 1E components and instruments identified in Tables 2.7.1.5-2 and 2.7.1.5-3 is powered from its respective Class 1E division.	6.b Tests will be performed by providing a test signal in only one Class 1E division at a time.	6.b The test signal exists at the Class 1E components and instruments identified in Tables 2.7.1.5-2 and 2.7.1.5-3 as being powered from the Class 1E division under test.
6.c Physical separation and electrical isolation are provided (1) between Class 1E divisions, and (2) between Class 1E divisions and non-Class 1E divisions.	6.c Inspection of the as-built Class 1E divisions will be performed.	6.c Physical separation and electrical isolation exist in accordance with NRC RG 1.75 (1) between Class 1E divisions, and (2) between Class 1E divisions and non-Class 1E divisions.
7.a The AFW system safety-related valves are functionally designed and qualified to perform their safety-related function under the full range of fluid flow, differential pressure, electrical, and temperature conditions up to and including design basis accident conditions.	7.a.i A type test or a combination of type test and analysis will be performed of the AFW system safety-related valves.	7.a.i A Functional Qualification Report performed in conformance to ASME QME-1-2007, as accepted in Regulatory Guide 1.100 Revision 3, exists and concludes that the AFW system safety-related valves listed in Table 2.7.1.5-2 are functionally designed and qualified to perform their safety-related function under the full range of fluid flow, differential pressure, electrical, and temperature conditions up to and including design basis accident conditions.

Table 2.7.1.5-4 (5 of 9)

Design Commitment	Inspections, Tests, Analyses	Acceptance Criteria
7.a (cont.)	7.a.ii A diagnostic stroke test and analysis will be performed of the AFW system safety-related valves under preoperational temperature, differential pressure, and flow conditions.	7.a.ii Each AFW system safety-related valve listed in Table 2.7.1.5-2 strokes fully open and fully closed by remote operation (or manual operation if a manually operated valve) under preoperational temperature, differential pressure, and flow conditions. Analysis based on sufficient diagnostic data demonstrates that the valves will perform at their design basis capability as established by the type test performed in accordance with 7.a.i.
	7.a.iii Tests of the as-built check valves will be performed under pre-operational test pressure, temperature, and fluid flow conditions.	7.a.iii Each check valve changes position as indicated in Table 2.7.1.5-2 under pre-operational test pressure, temperature, and fluid flow conditions.
7.b After loss of motive power, MOVs, AOVs, and SOVs indicated in Table 2.7.1.5-2 assume the indicated loss of motive power position.	7.b Tests of the as-built MOVs, AOVs, and SOVs will be performed under the conditions of loss of motive power.	7.b Upon loss of motive power, each as-built MOV, AOV, or SOVs identified in Table 2.7.1.5-2 assumes the indicated loss of motive power position.
8.a Controls exist in the MCR to start and stop the AFW pumps, and to open and close the MOVs, AOVs, and SOVs identified in Table 2.7.1.5-2.	8.a Tests will be performed using the controls in the MCR to start and stop the AFW pumps, and to open and close the MOVs, AOVs, and SOVs.	8.a Controls in the as-built MCR start and stop the AFW pumps, and open and close the MOVs, AOVs, and SOVs identified in Table 2.7.1.5-2.

Table 2.7.1.5-4 (6 of 9)

Design Commitment		Inspections, Tests, Analyses		Acceptance Criteria	
8.b	Controls exist in the RSR to start and stop the AFW pumps, and to open and close the MOVs, AOVs, and SOVs identified in Table 2.7.1.5-2.	8.b	Tests will be performed using the controls in the RSR to start and stop the AFW pumps, and to open and close the MOVs, AOVs, and SOVs.	8.b	Controls in the as-built RSR start and stop the AFW pumps, and open and close the MOVs, AOVs, and SOVs identified in Table 2.7.1.5-2.
8.c	Displays and alarms exist and are retrievable in the MCR as defined in Tables 2.7.1.5-2 and 2.7.1.5-3.	8.c	Inspections of the as-built displays and alarms in the MCR will be performed.	8.c	Displays and alarms exist and are retrieved in the as-built MCR as defined in Tables 2.7.1.5-2 and 2.7.1.5-3.
8.d	Displays and alarms exist and are retrievable in the RSR as defined in Tables 2.7.1.5-2 and 2.7.1.5-3.	8.d	Inspections of the as-built displays and alarms in the RSR will be performed.	8.d	Displays and alarms exist and are retrieved in the as-built RSR as defined in Tables 2.7.1.5-2 and 2.7.1.5-3.
9.	The two mechanical divisions of the AFWS (A/C & B/D) are physically separated.	9.	Inspection of the as-built mechanical divisions will be performed.	9.	The two mechanical divisions of the AFWS are physically separated by a divisional wall that is a 3-hour rated fire barrier.
10.a	The AFW pumps have sufficient net positive suction head (NPSH).	10.a	Test to measure the as-built AFW pump suction pressure will be performed. Inspection and analyses to determine NPSH available to each pump will be performed based on this test data and as-built data.	10.a	A report exists and concludes that the as-built calculated NPSH available exceeds each AFW pump's NPSH required.
10.b	Each AFWST has sufficient capacity for eight hours of operation at hot standby condition and for subsequent cooldown of the reactor coolant system within six hours to condition that permit operation of the shutdown cooling system.	10.b	Inspections and analyses will be performed to verify the minimum required volume of each of the as-built AFWSTs.	10.b	Each AFWST capacity exceeds the volume of 1,524,165 liters (400,000 gallons)

Table 2.7.1.5-4 (7 of 9)

Design Commitment	Inspections, Tests, Analyses	Acceptance Criteria
10.c The AFW system safety-related pumps are functionally designed and qualified to perform their safety-related function under the full range of fluid flow, differential pressure, electrical, and temperature conditions up to and including design basis accident conditions.	10.c A type test or a combination of type test and analysis will be performed of the AFW system safety-related pumps.	10.c A Functional Qualification Report performed in conformance to ASME QME-1, as accepted in Regulatory Guide 1.100, exists and concludes that the AFW system safety-related pumps listed in Table 2.7.1.5-2 are functionally designed and qualified to perform their safety-related function under the full range of fluid flow, differential pressure, electrical, and temperature conditions up to and including design basis accident conditions.
11.a The AFWS is actuated by an AFAS from the ESFAS or DPS.	11.a Tests will be performed by generating a signal simulating an AFAS from the ESFAS for its corresponding steam generator. The test will be repeated using a signal simulating DPS.	11.a The as-built motor-driven and turbine-driven pumps start, and the as-built auxiliary feedwater isolation and AFW modulating valves open, in the division receiving the signal simulating an AFAS from the ESFAS. The same components actuate in response to a signal simulating DPS. Flow is delivered to the steam generator(s) in no more than 60 seconds following an AFAS from the ESFAS or DPS.

Table 2.7.1.5-4 (8 of 9)

Design Commitment	Inspections, Tests, Analyses	Acceptance Criteria
11.b The ESF-CCS includes logic to close the AFW isolation valves when SG water level has risen above a high level setpoint, and to re-open the AFW isolation valves when SG water level drops below a low level setpoint.	11.b Tests of each as-built AFW isolation valve will be performed using signals simulating high and low SG water level as input to the ESF-CCS.	11.b A signal simulating high SG water level signal as input to the ESF-CCS closes the as-built AFW isolation valves in its associated division. The as-built AFW isolation valves close within 14 seconds after receipt of a signal. A signal simulating low SG water level signal as input to the ESF-CCS opens the AFW isolation valves in its associated division.
12.a Each AFW pump delivers the minimum flow to its respective steam generator for removal of core decay heat against a steam generator feedwater nozzle pressure.	12.a A test of each AFW pump will be performed to determine the system flow against steam generator pressure under preoperational condition. Analysis will be performed to convert the test results to the design conditions.	12.a A test report exists and concludes that each AFW pump delivers minimum flow of 2,461 L/min (650 gpm) to its respective steam generator against a steam generator feedwater nozzle pressure of 87.18 kg/cm^{2}A (1,240 psia).
12.b The cavitating flow-limiting venturis limit the maximum flow to each steam generator with both AFW pumps running in the division against a steam generator pressure.	12.b A test will be performed with both pumps in a division running under preoperational condition. Analysis will be used to convert the test results to the design conditions.	12.b A test report exists and concludes that the maximum flow to each SG is less than or equal to 3,596 L/min (950 gpm) with both pumps running against a steam generator pressure of 0 kg/cm^{2}G (0 psig).

Table 2.7.1.5-4 (9 of 9)

Design Commitment	Inspections, Tests, Analyses	Acceptance Criteria
13. The AF non-metallic parts, materials, and lubricants used in safety-related mechanical equipment perform their safety-related function up to the end of their qualified life in the design basis harsh environmental conditions (both internal service conditions and external environmental conditions) experienced during normal operations, anticipated operational occurrences, design-basis accidents, and post accident conditions.	13. A type test or a combination of type test and analysis will be performed of the SIS non-metallic parts, materials, and lubricants used in safety-related mechanical equipment.	13. A report exists and concludes that the non-metallic parts, materials, and lubricants used in safety-related mechanical equipment listed in Table 2.7.1.5-2 perform their safety-related function up to the end of their qualified life under the design basis harsh environmental conditions (both internal service conditions and external environmental conditions) experienced during normal operations, anticipated operational occurrences, design-basis accidents, and post accident conditions.

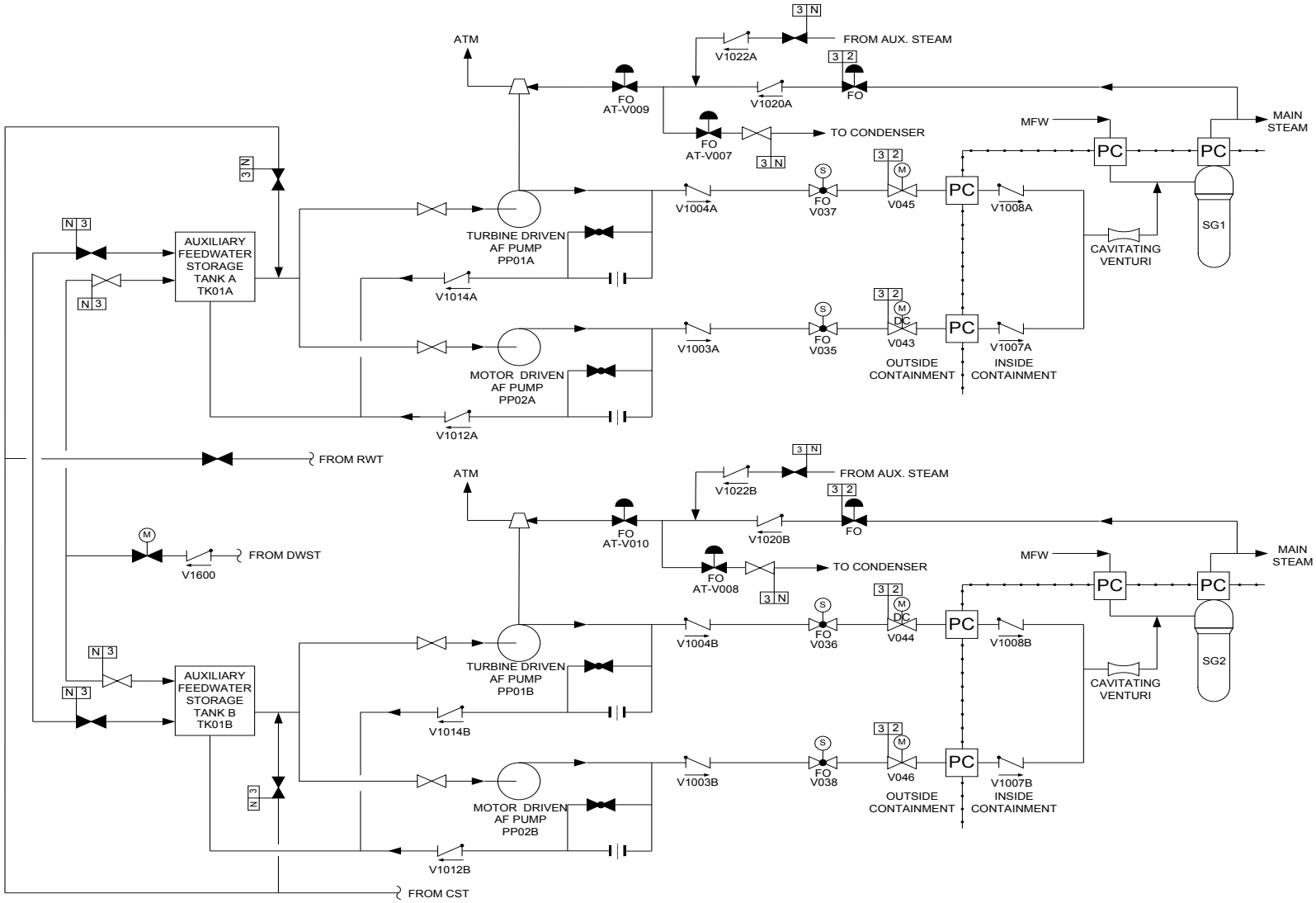

Figure 2.7.1.5-1 Auxiliary Feedwater System

2.7.1.6 Condenser Vacuum System

No entry for this system.

2.7.1.7 Circulating Water System

No entry for this system.

2.7.1.8 Steam Generator Blowdown System

2.7.1.8.1 Design Description

The steam generator blowdown system (SGBS) removes and processes steam generator fluid containing impurities, and returns the water to the feedwater and condensate system.

The SGBS performs a safety-related function of isolating the secondary side of the SG using two isolation valves in series in the blowdown lines from each SG.

The safety-related portions of the SGBS components and piping are located in the containment and the auxiliary building.

1. The functional arrangement of the SGBS is as described in the Design Description of Subsection 2.7.1.8.1 and in Table 2.7.1.8-1 and as shown in Figure 2.7.1.8-1.

2.a The ASME Code components identified in Table 2.7.1.8-2 are designed and constructed in accordance with ASME Section III requirements.

2.b The ASME Code piping, including supports, identified in Table 2.7.1.8-1 is designed and constructed in accordance with ASME Section III requirements.

3.a Pressure boundary welds in ASME Code components identified in Table 2.7.1.8-2 meet ASME Section III requirements.

3.b Pressure boundary welds in ASME Code piping identified in Table 2.7.1.8-1 meet ASME Section III requirements.

4.a. The ASME Code components identified in Table 2.7.1.8-2 retain their pressure boundary integrity at their design pressure.

4.b The ASME Code piping identified in Table 2.7.1.8-1 retains its pressure boundary integrity at its design pressure.

5.a The seismic Category I components identified in Tables 2.7.1.8-2, including the supports and anchorages, withstand seismic design basis loads without loss of safety function.

5.b The seismic Category I piping, including supports, identified in Table 2.7.1.8-1 withstands seismic design basis loads without loss of its safety function.

6.a The Class 1E components identified in Table 2.7.1.8-2 as being qualified for a harsh environment (and the associated wiring, cables, and terminations) withstand the environmental conditions that would exist before, during, and following a design basis accident without loss of safety function for the time required to perform the safety function.

6.b Each of the Class 1E components identified in Tables 2.7.1.8-2 is powered from its respective Class 1E division.

6.c Physical separation and electrical isolation are provided (1) between Class 1E divisions, and (2) between Class 1E divisions and non-Class 1E divisions.

7.a The SGBS safety-related valves are designed and qualified to perform their safety-related function under the full range of fluid flow, differential pressure, electrical, and temperature conditions up to and including design basis accident conditions.

7.b After loss of motive power, MOVs and AOVs identified in Table 2.7.1.8-2 assume the indicated loss of motive power position.

8.a Controls exist in the MCR to open and close the MOVs and AOVs identified in Table 2.7.1.8-2.

8.b Controls exist in the RSR to open and close the MOVs and AOVs identified in Table 2.7.1.8-2.

8.c Displays and alarms exist and are retrievable in the MCR as defined in Tables 2.7.1.8-2.

8.d Displays and alarms exist and are retrievable in the RSR as defined in Table 2.7.1.8-2.

9. Each mechanical division of the SGBS (Divisions I, II) is physically separated from the other division.

10. The SGBS components are classified as RW-IIc in accordance with NRC RG 1.143 and designed to the corresponding requirements in order to maintain structural integrity under the design basis loads. Component Radiation Safety Classification is summarized in Table 2.7.1.8-2.

11. The SGBS non-metallic parts, materials, and lubricants used in safety-related mechanical equipment perform their safety-related function up to the end of their qualified life in the design basis harsh environmental conditions (both internal service conditions and external environmental conditions) experienced during normal operations, anticipated operational occurrences, design-basis accidents, and post accident conditions.

2.7.1.8.2 Inspections, Tests, Analyses, and Acceptance Criteria

The inspections, tests, analyses, and associated acceptance criteria for the steam generator blowdown system are specified in Table 2.7.1.8-3.

The ITAAC related to the CIVs and the piping between the CIVs of the SGBS are described in Table 2.11.3-2.

Table 2.7.1.8-1

Steam Generator Blowdown System Equipment and Piping Location/Characteristics

Equipment and Piping Name	Location	ASME Section III Class	Seismic Category
The SGBS piping and valves from the SG blowdown nozzles to the outermost containment isolation valves, SD-V007 and V008	Containment Building/ Auxiliary Building	2	I

Table 2.7.1.8-2

Steam Generator Blowdown System Component List

Component Name	Item No.	ASME Section III Class	Seismic Category	Class 1E/ Harsh Envir. Qual.	Display/ Control at MCR	Display/ Control at RSR	Control Signal	Active Safety Function	Loss of Motive Power Position	Radwaste Safety Class
Containment Isolation Valve (AOV)	SD-V005, V006	2	I	Yes/Yes	Yes/Yes	Yes/Yes	CIAS/ MSIS/ AFAS/ DPS-AFAS	Closed	Closed	-
Containment Isolation Valve (MOV)	SD-V007, V008	2	I	Yes/Yes	Yes/Yes	Yes/Yes	CIAS/ MSIS/ AFAS/ DPS-AFAS/ HRAS/ BFTHHLAS	Closed	As is	-
Containment Isolation Valve (Check)	SD-V1115	2	I	-/Yes	-/-	-/-	-	Closed	-	-
	SD-V1116	2	I	-/Yes	-/-	-/-	-	Closed	-	-
Steam Generator Blowdown Prefilter	SD-FT01, FT02	NSS	II	- /No	-/-	-/-	-	-	-	RW-IIc
Steam Generator Blowdown Postfilter	SD-FT03	NSS	II	- /No	-/-	-/-	-	-	-	RW-IIc
Steam Generator Blowdown Mixed Bed	SD-DD01, DD02	NSS	II	- /No	No/No	No/No	-	-	-	RW-IIc
Steam Generator Blowdown Flash Tank	SD-TK01	NSS	II	No/No	Yes/No	Yes/No	-	-	-	RW-IIc

(1) Dash(-) indicates not applicable.

Table 2.7.1.8-3 (1 of 6)

Steam Generator Blowdown System ITAAC

Design Commitment	Inspections, Tests, Analyses	Acceptance Criteria
1. The functional arrangement of the SGBS is as described in the Design Description of Subsection 2.7.1.8.1 and in Table 2.7.1.8-1 and as shown in Figure 2.7.1.8-1.	1. Inspection of the as-built SGBS will be performed.	1. The as-built SGBS conforms with the functional arrangement as described in the Design Description of Subsection 2.7.1.8.1 and in Table 2.7.1.8-1 and as shown in Figure 2.7.1.8-1.
2.a The ASME Code components identified in Table 2.7.1.8-2 are designed and constructed in accordance with ASME Section III requirements.	2.a Inspection of the as-built ASME Code components identified in Table 2.7.1.8-2 will be performed and documented in the ASME data report(s).	2.a The ASME Section III data report(s) exist and conclude that the as-built ASME Code components identified in Table 2.7.1.8-2 are designed and constructed in accordance with Code Section III requirements.
2.b The ASME Code piping, including supports, identified in Table 2.7.1.8-1 is designed and constructed in accordance with ASME Section III requirements.	2.b Inspection of the as-built ASME Code piping, including supports, identified in Table 2.7.1.8-1 will be performed and documented in the ASME data report(s).	2.b The ASME Section III data report(s) exist and conclude that the as-built ASME Code piping, including supports, identified in Table 2.7.1.8-1 is designed and constructed in accordance with ASME Section III requirements.
3.a Pressure boundary welds in ASME Code components identified in Table 2.7.1.8-2 meet ASME Section III requirements.	3.a Inspections of the as-built pressure boundary welds in ASME Code components identified in Table 2.7.1.8-2 will be performed in accordance with the ASME Section III.	3.a A report exists and concludes that the ASME Section III requirements are met for non-destructive examination of the as-built pressure boundary welds in ASME Code components identified in Table 2.7.1.8-2.
3.b Pressure boundary welds in ASME Code piping identified in Table 2.7.1.8-1 meet ASME Section III requirements.	3.b Inspections of the as-built pressure boundary welds in ASME Code piping identified in Table 2.7.1.8-1 will be performed in accordance with the ASME Section III.	3.b A report exists and concludes that the ASME Section III requirements are met for non-destructive examination of the as-built pressure boundary welds in ASME Code piping identified in Table 2.7.1.8-1.

Table 2.7.1.8-3 (2 of 6)

Design Commitment	Inspections, Tests, Analyses	Acceptance Criteria
4.a The ASME Code components identified in Table 2.7.1.8-2 retain their pressure boundary integrity at their design pressure.	4.a A hydrostatic test will be conducted on the as-built ASME Code components identified in Table 2.7.1.8-2 required to be hydrostatically tested by the ASME Section III.	4.a A report exists and concludes that the results of the hydrostatic test of the as-built ASME Code components identified in Table 2.7.1.8-2 conform with ASME Section III requirements.
4.b The ASME Code piping identified in Table 2.7.1.8-1 retains its pressure boundary integrity at its design pressure.	4.b A hydrostatic test will be conducted on the as-built ASME Code piping identified in Table 2.7.1.8-1 required to be hydrostatically tested by the ASME Section III.	4.b A report exists and concludes that the results of the hydrostatic test of the as-built ASME Code piping identified in Table 2.7.1.8-1 conform with ASME Section III requirements.
5.a The seismic Category I components identified in Tables 2.7.1. 8-2, including the supports and anchorages, withstand seismic design basis loads without loss of safety function.	5.a.i Inspections will be performed to verify that the as-built seismic Category I components are located in the seismic Category I structure.	5.a.i The as-built seismic Category I components identified in Tables 2.7.1.8-2 are located in the seismic Category I structure.
	5.a.ii Type tests, analyses or a combination of type tests and analyses of seismic Category I components will be performed.	5.a.ii A report exists and concludes that the seismic Category I components identified in Table 2.7.1.8-2 withstand seismic design basis loads without loss of safety function.
	5.a.iii Inspections will be performed to verify that the as-built seismic Category I components, including the supports and anchorages, are seismically bounded by the tested or analyzed conditions.	5.a.iii A report exists and concludes that the as-built seismic Category I components identified in Table 2.7.1.8-2, including the supports and anchorages, are seismically bounded by the tested or analyzed conditions.
5.b The seismic Category I piping, including supports, identified in Table 2.7.1.8-1 withstands seismic design basis loads without loss of its safety function.	5.b.i Inspections will be performed to verify that the as-built seismic Category I piping, including supports, is located in a seismic Category I structure(s).	5.b.i The as-built seismic Category I piping, including supports, identified in Table 2.7.1.8-1 is located in a seismic Category I structure(s).

Table 2.7.1.8-3 (3 of 6)

Design Commitment		Inspections, Tests, Analyses		Acceptance Criteria	
5.b	(cont.)	5.b.ii	Inspections and analyses of the as-built seismic Category I piping, including supports, will be performed.	5.b.ii	A report exists and concludes that the as-built seismic Category I piping, including supports, identified in Table 2.7.1.8-1 withstands seismic design basis loads without a loss of its safety function.
6.a	The Class 1E components identified in Table 2.7.1.8-2 as being qualified for a harsh environment (and the associated wiring, cables, and terminations) withstand the environmental conditions that would exist before, during, and following a design basis accident without loss of safety function for the time required to perform the safety function.	6.a.i	Type tests or a combination of type tests and analyses will be performed on Class 1E components located in a harsh environment.	6.a.i	A report exists and concludes that the Class 1E components identified in Table 2.7.1.8-2 as being qualified for a harsh environment withstand the environmental conditions that would exist before, during, and following a design basis accident without loss of safety function for the time required to perform the safety function.
		6.a.ii	Inspections will be performed on the as-built Class 1E components (and the associated wiring, cables, and terminations) located in a harsh environment.	6.a.ii	A report exists and concludes that the as-built Class 1E components identified in Table 2.7.1.8-2 as being qualified for a harsh environment (and the associated wiring, cables, and terminations) are bounded by type tests or a combination of type tests and analyses.
6.b	Each of the Class 1E components identified in Tables 2.7.1.8-2 is powered from its respective Class 1E division.	6.b	Tests will be performed by providing a test signal in only one Class 1E division at a time.	6.b	The test signal exists at the Class 1E components identified in Tables 2.7.1.8-2 as being powered from the Class 1E train division under test.
6.c	Physical separation and electrical isolation are provided (1) between Class 1E divisions, and (2) between Class 1E divisions and non-Class 1E divisions.	6.c	Inspection of the as-built Class 1E divisions will be performed.	6.c	Physical separation and electrical isolation exist in accordance with NRC RG 1.75 (1) between Class 1E divisions and (2) between Class 1E divisions and non-Class 1E divisions.

Table 2.7.1.8-3 (4 of 6)

Design Commitment	Inspections, Tests, Analyses	Acceptance Criteria
7.a The SGBS safety-related valves are functionally designed and qualified to perform their safety-related function under the full range of fluid flow, differential pressure, electrical, and temperature conditions up to and including design basis accident conditions.	7.a.i A type test or a combination of type test and analysis will be performed of the SGBS safety-related valves.	7.a.i A Functional Qualification Report performed in conformance to ASME QME-1-2007, as accepted in Regulatory Guide 1.100 Revision 3, exists and concludes that the SGBS safety-related valves listed in Table 2.7.1.8-2 are functionally designed and qualified to perform their safety-related function under the full range of fluid flow, differential pressure, electrical, and temperature conditions up to and including design basis accident conditions.
	7.a.ii A diagnostic stroke test and analysis will be performed of the SGBS safety-related valves under preoperational temperature, differential pressure, and flow conditions.	7.a.ii Each SGBS safety-related valve listed in Table 2.7.1.8-2 strokes fully open and fully closed by remote operation (or manual operation if a manually operated valve) under preoperational temperature, differential pressure, and flow conditions. Analysis based on sufficient diagnostic data demonstrates that the valves will perform at their design basis capability as established by the type test performed in accordance with 7.a.i.
7.b After loss of motive power, MOVs and AOVs identified in Table 2.7.1.8-2 assume the indicated loss of motive power position.	7.b Test of the as-built MOVs and AOVs will be performed under the conditions of loss of motive power.	7.b Upon loss of motive power, each as-built MOV or AOV identified in Table 2.7.1.8-2 assumes the indicated loss of motive power position.

Table 2.7.1.8-3 (5 of 6)

Design Commitment		Inspections, Tests, Analyses		Acceptance Criteria	
8.a	Controls exist in the MCR to open and close the MOVs and AOVs identified in Table 2.7.1.8-2.	8.a	Tests will be performed using the controls in the MCR to open and close the MOVs and AOVs.	8.a	Controls in the as-built MCR open and close the MOVs and AOVs identified in Table 2.7.1.8-2.
8.b	Controls exist in the RSR to open and close the MOVs and AOVs identified in Table 2.7.1.8-2.	8.b	Tests will be performed using the controls in the RSR to open and close the MOVs and AOVs.	8.b	Controls in the RSR open and close the MOVs and AOVs identified in Table 2.7.1.8-2.
8.c	Displays and alarms exist and are retrievable in the MCR as defined in Tables 2.7.1.8-2.	8.c	Inspections of the as-built displays and alarms in the MCR for the SGBS will be performed.	8.c	Displays and alarms exist and are retrieved in the as-built MCR as defined in Tables 2.7.1.8-2.
8.d	Displays and alarms exist and are retrievable in the RSR as defined in Table 2.7.1.8-2.	8.d	Inspections of the as-built displays and alarms in the RSR for the SGBS will be performed.	8.d	Displays and alarms exist and are retrieved in the as-built RSR as defined in Table 2.7.1.8-2.
9.	Each mechanical division of the SGBS (Divisions I, II) is physically separated from the other division	9.	Inspection of the as-built mechanical divisions of SGBS will be performed.	9.	Each mechanical division of the SGBS is physically separated by a divisional wall that is a 3-hour rated fire barrier.
10.	The SGBS components are classified as RW-IIc in accordance with NRC RG 1.143 and designed to the corresponding requirements in order to maintain structural integrity under the design basis loads. Component Radiation Safety Classification is summarized in Table 2.7.1.8-2.	10.	Inspection and analysis will be performed on the as-built equipment classified as RW-IIc in Table 2.7.1.8-2.	10.	A report exists and concludes that the as-built equipment classified as RW-IIc in Table 2.7.1.8-2 maintains structural integrity under the design basis loads.

Table 2.7.1.8-3 (6 of 6)

Design Commitment	Inspections, Tests, Analyses	Acceptance Criteria
11. The SGBS non-metallic parts, materials, and lubricants used in safety-related mechanical equipment perform their safety-related function up to the end of their qualified life in the design basis harsh environmental conditions (both internal service conditions and external environmental conditions) experienced during normal operations, anticipated operational occurrences, design-basis accidents, and post accident conditions.	11. A type test or a combination of type test and analysis will be performed of the SGBS non-metallic parts, materials, and lubricants used in safety-related mechanical equipment.	11. A report exists and concludes that the non-metallic parts, materials, and lubricants used in safety-related mechanical equipment listed in Table 2.7.1.8-2 perform their safety-related function up to the end of their qualified life under the design basis harsh environmental conditions (both internal service conditions and external environmental conditions) experienced during normal operations, anticipated operational occurrences, design-basis accidents, and post accident conditions.

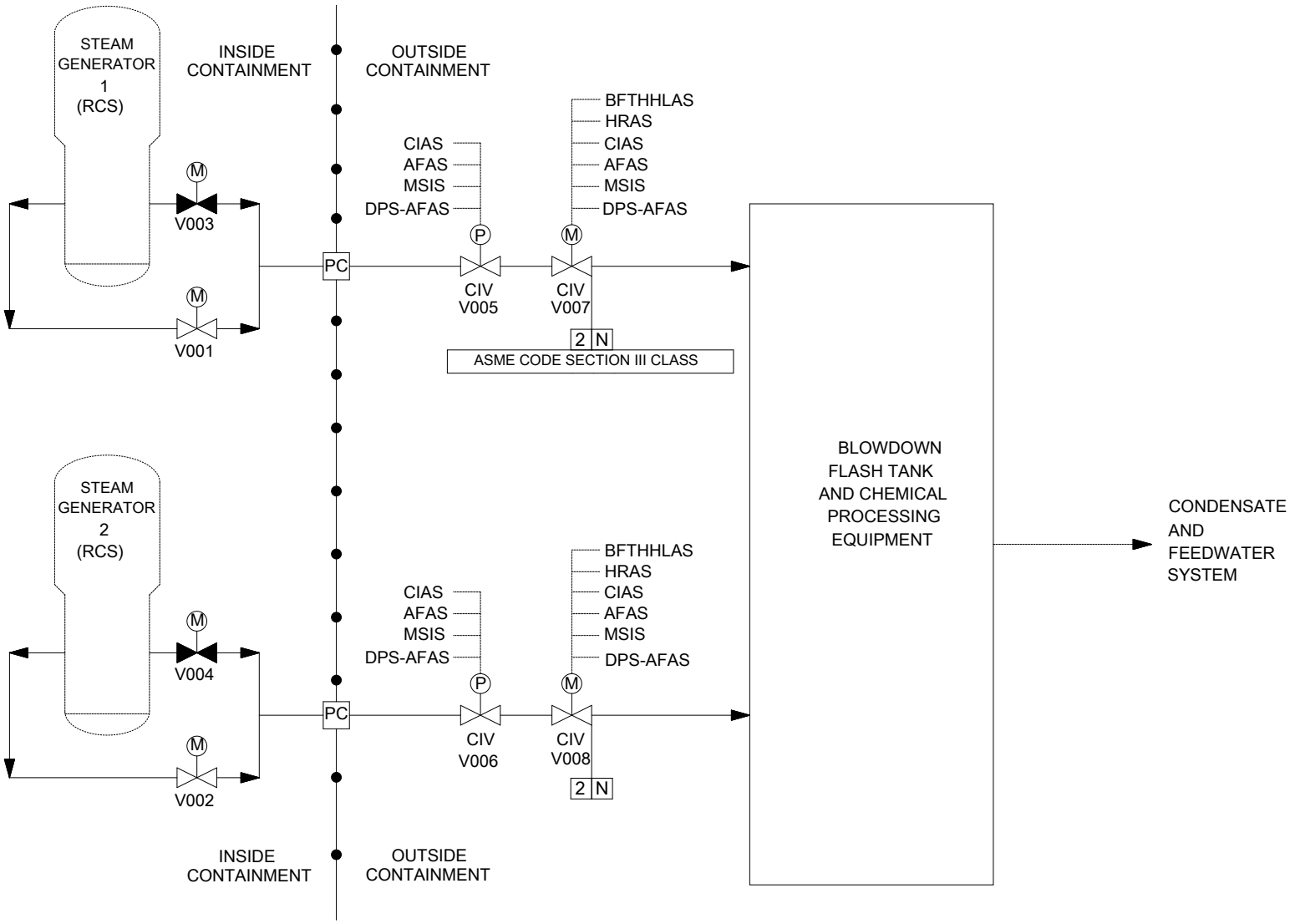

Figure 2.7.1.8-1 Steam Generator Blowdown System

2.7.1.9 Auxiliary Steam System

2.7.1.9.1 Design Description

The auxiliary steam system (ASS) is a non-safety-related system, with the exception of containment isolation valves (CIVs) and the piping between the CIVs that are safety-related, ASME Section III Class 2 and Seismic Category I as described in Subsection 2.11.3.

The ASS performs the containment isolation function for the ASS line penetrating the containment.

The ASS supplies auxiliary steam to all usage points through an auxiliary steam header interconnecting the main steam system and the auxiliary boiler.

2.7.1.9.2 Inspections, Tests, Analyses, and Acceptance Criteria

The ITAAC related to the CIVs and the piping between the CIVs of the ASS are described in Table 2.11.3-2.

2.7.2 Cooling Water System

2.7.2.1 Essential Service Water System

2.7.2.1.1 Design Description

The essential service water system (ESWS), in conjunction with the ultimate heat sink (UHS), provides cooling water to remove heat from the component cooling water system (CCWS).

The ESWS is a safety-related system and provides cooling water to the CCW heat exchangers.

The ESWS consists of two independent, redundant, once-through, safety-related divisions. Each division cools one of two divisions of the CCWS, which cools 100 percent of the safety-related loads. Each division of the ESWS consists of two pumps, three CCW heat exchangers, three debris filters, and associated piping, valves, controls and instrumentation.

To meet above functional requirement, the ESWS is designed as follows:

1. The functional arrangement of the ESWS is as described in the Design Description of Subsection 2.7.2.1.1 and in Table 2.7.2.1-1 and as shown in Figure 2.7.2.1-1.

2.a The ASME Code components identified in Table 2.7.2.1-2 are designed and constructed in accordance with ASME Section III requirements.

2.b The ASME Code piping, including supports, identified in Table 2.7.2.1-1 is designed and constructed in accordance with ASME Section III requirements.

3.a Pressure boundary welds in ASME Code components identified in Table 2.7.2.1-2 meet ASME Section III requirements.

3.b Pressure boundary welds in ASME Code piping identified in Table 2.7.2.1-1 meet ASME Section III requirements.

4.a The ASME Code components identified in Table 2.7.2.1-2 retain their pressure boundary integrity at their design pressure.

4.b The ASME Code piping identified in Table 2.7.2.1-1 retains its pressure boundary integrity at its design pressure.

5.a The seismic Category I components and instruments identified in Tables 2.7.2.1-2 and 2.7.2.1-3, including the supports and anchorages, withstand seismic design basis loads without loss of safety function.

5.b The seismic Category I piping, including supports, identified in Table 2.7.2.1-1 withstand seismic design basis loads without loss of safety function.

6.a Each of the Class 1E components and instruments identified in Tables 2.7.2.1-2 and 2.7.2.1-3 is powered from its respective Class 1E division.

6.b Physical separation and electrical isolation are provided (1) between Class 1E divisions, and (2) between Class 1E divisions and non-Class 1E divisions.

7.a The ESWS safety-related valves are functionally designed and qualified to perform their safety-related function under the full range of fluid flow, differential pressure, electrical, and temperature conditions up to and including design basis accident conditions.

7.b After loss of motive power, MOVs identified in Table 2.7.2.1-2 assume the indicated loss of motive power position.

8.a Controls exist in the MCR to start and stop the ESW pumps, and to open and close the MOVs identified in Table 2.7.2.1-2.

8.b Controls exist in the RSR to start and stop the ESW pumps, and to open and close the MOVs identified in Table 2.7.2.1-2.

8.c Displays and alarms exist and are retrievable in the MCR as defined in Tables 2.7.2.1-2 and 2.7.2.1-3.

8.d Displays and alarms exist and are retrievable in the RSR as defined in Tables 2.7.2.1-2 and 2.7.2.1-3.

9. The two mechanical divisions of the ESWS (A/C & B/D) are physically separated.

10. The ESWS has the capacity to remove heat from the CCWS during power operation, shutdown, refueling, and design basis accident conditions.

11. The ESWS safety-related pumps are functionally designed and qualified to perform their safety-related function under the full range of fluid flow, differential pressure, electrical, and temperature conditions up to and including design basis accident conditions.

12. The ESW pumps have net positive suction head (NPSH).

2.7.2.1.2 Inspections, Tests, Analysis, and Acceptance Criteria

The inspection, tests, analyses, and associated acceptance criteria for the ESWS are specified in Table 2.7.2.1-4.

Table 2.7.2.1-1

Essential Service Water System Equipment and Piping Location/Characteristics

Equipment and Piping Name	Location	ASME Section III Class	Seismic Category
ESW pumps	ESW Building	3	I
ESW Debris Filters	CCW HX Building	3	I
ESW piping and valves excluding the following 1) through 3) below:	CCWHX Building / ESW Building	3	I
1) ESW blowdown piping excluding the isolation valve SX-1063, SX1065 in the division I, and SX-1064, SX-1066 in the division II	ESW Building	-	II
2) Radiation monitoring piping excluding the isolation valve SX-2071, SX-2073 in the division I, and SX-2072, SX-2074 in the division II	CCWHX Building	-	II
3) Backwash discharge piping excluding the isolation valve SX-3102 and SX- 3104	CCWHX Building	-	II

Table 2.7.2.1-2

Essential Service Water System Components List

Component Name	Item No.	ASME Section III Class	Seismic Category	Class 1E/ Harsh Envir. Qual.	Display/ Control at MCR	Display/ Control at RSR	Control Signal	Active Safety Function	Loss of Motive Power Position
ESW pumps	SX-PP01A, PP01B, PP02A, PP02B	3	I	Yes/No	Yes/Yes	Yes/Yes	EDG Load Sequence Disch. Press. Low	Start	-
ESW debris filters	SX-FT01A, FT02A, FT03A, FT01B, FT02B, FT03B	3	I	No/No	No/No	No/No	-	-	-
ESW pump discharge line check	SX-1001, 1002, 1003, 1004	3	I	-/-	-/-	-/-	-	Open/ Close	-
ESW pump discharge isolation (MOV)	SX-045, 046, 047, 048	3	I	Yes/No	Yes/Yes	Yes/Yes	-	Open	As Is
CCW heat exchanger outlet common header vacuum relief	SX-1051, 1052	3	I	-/No	-/-	-/-	-	Open/ Closed	-

(1) Dash(-) indicates not applicable.

Table 2.7.2.1-3

Essential Service Water System Instruments List

Instrument Name	Item No.	Location	ASME Section III Class	Seismic Category	Class 1E/ Harsh Envir. Qual.	Display/ Alarm at MCR	Display/ Alarm at RSR
ESW pump discharge pressure	P-035A, 036B, 039C, 040D	ESW Building	-	I	Yes//No	Yes/Yes	Yes/Yes
CCW heat exchanger inlet/outlet temperature	T-051, 052, T-071A/072B/073C/074D(1)	CCW HX Building	-	I	No//No	Yes/No	No/No
ESW pump discharge flow	F-049A, 050B, 051C, 052D	ESW Building	-	I	Yes//No	Yes/Yes	Yes/Yes

(1) CCW heat exchanger inlet temperatures are located in the basin of cooling tower.
(2) Dash(-) indicates not applicable.

Table 2.7.2.1-4 (1 of 6)

Essential Service Water System ITAAC

Design Commitment	Inspections, Tests, Analyses	Acceptance Criteria
1. The functional arrangement of the ESWS is as described in the Design Description of Subsection 2.7.2.1.1 and in Table 2.7.2.1-1 and as shown in Figure 2.7.2.1-1.	1. Inspection of the as-built ESWS will be performed.	1. The as-built ESWS conforms with the functional arrangement as described in the Design Description of Subsection 2.7.2.1.1 and in Table 2.7.2.1-1 and as shown in Figure 2.7.2.1-1.
2.a The ASME Code components identified in Table 2.7.2.1-2 are designed and constructed in accordance with ASME Section III requirements.	2.a Inspection of the as-built ASME Code components identified in Table 2.7.2.1-2 will be performed and documented in the ASME data report(s).	2.a The ASME Section III data report(s) exist and conclude that the as-built ASME Code components identified in Table 2.7.2.1-2 are designed and constructed in accordance with ASME Section III requirements.
2.b The ASME Code piping, including supports, identified in Table 2.7.2.1-1 is designed and constructed in accordance with ASME Section III requirements.	2.b Inspection of the as-built ASME Code piping, including supports, identified in Table 2.7.2.1-1 will be performed and documented in the ASME data report(s).	2.b The ASME Section III data report(s) exist and conclude that the as-built ASME Code piping, including supports, identified in Table 2.7.2.1-1 is designed and constructed in accordance with ASME Section III requirements.
3.a Pressure boundary welds in ASME Code components identified in Table 2.7.2.1-2 meet ASME Section III requirements.	3.a Inspections of the as-built pressure boundary welds in ASME Code components identified in Table 2.7.2.1-2 will be performed in accordance with the ASME Section III.	3.a A report exists and concludes that the ASME Section III requirements are met for non-destructive examination of the as-built pressure boundary welds in ASME Code components identified in Table 2.7.2.1-2.
3.b Pressure boundary welds in ASME Code piping identified in Table 2.7.2.1-1 meet ASME Section III requirements.	3.b Inspections of the as-built pressure boundary welds in ASME Code piping identified in Table 2.7.2.1-1 will be performed in accordance with the ASME Section III.	3.b A report exists and concludes that the ASME Section III requirements are met for non-destructive examination of the as-built pressure boundary welds in ASME Code piping identified in Table 2.7.2.1-1.

Table 2.7.2.1-4 (2 of 6)

Design Commitment	Inspections, Tests, Analyses	Acceptance Criteria
4.a The ASME Code components identified in Table 2.7.2.1-2 retain their pressure boundary integrity at their design pressure.	4.a A hydrostatic test will be conducted on the as-built ASME Code components identified in Table 2.7.2.1-2 required to be hydrostatically tested by the ASME Section III.	4.a A report exists and concludes that the results of the hydrostatic test of the as-built ASME Code components identified in Table 2.7.2.1-2 conform with ASME Section III requirements.
4.b The ASME Code piping identified in Table 2.7.2.1-1 retains its pressure boundary integrity at its design pressure.	4.b A hydrostatic test will be conducted on the as-built ASME Code piping identified in Table 2.7.2.1-1 required to be hydrostatically tested by the ASME Section III.	4.b A report exists and conclude that the results of the hydrostatic test of the as-built ASME Code piping identified in Table 2.7.2.1-1 conform with ASME Code Section III requirements.
5.a The seismic Category I components and instruments identified in Tables 2.7.2.1-2 and 2.7.2.1-3, including the supports and anchorages, withstand seismic design basis loads without loss of safety function.	5.a.i Inspections will be performed to verify that the as-built seismic Category I components and instruments are located in the seismic Category I structure.	5.a.i The as-built seismic Category I components and instruments identified in Tables 2.7.2.1-2 and 2.7.2.1-3 are located in the seismic Category I structure.
	5.a.ii Type tests, analyses or a combination of type tests and analyses of seismic Category I components and instruments will be performed.	5.a.ii A report exists and concludes that the seismic Category I components and instruments identified in Tables 2.7.2.1-2 and 2.7.2.1-3 withstand seismic design basis loads without loss of safety function.
	5.a.iii Inspections will be performed to verify that the as-built seismic Category I components and instruments, including the supports and anchorages, are seismically bounded by the tested or analyzed conditions.	5.a.iii A report exists and concludes that the as-built seismic Category I components and instruments identified in Tables 2.7.2.1-2 and 2.7.2.1-3, including the supports and anchorages, are seismically bounded by the tested or analyzed conditions.

Table 2.7.2.1-4 (3 of 6)

Design Commitment	Inspections, Tests, Analyses	Acceptance Criteria
5.b The seismic Category I piping, including supports, identified in Table 2.7.2.1-1 withstand seismic design basis loads without loss of safety function.	5.b.i Inspections will be performed to verify that the as-built seismic Category I piping, including supports, is located in the seismic Category I structure(s).	5.b.i The as-built seismic Category I piping, including supports, identified in Table 2.7.2.1-1 is located in the seismic Category I structure(s).
	5.b.ii Inspections and analyses of the as-built seismic Category I piping, including supports, will be performed.	5.b.ii A report exists and concludes that the as-built seismic Category I piping, including supports, identified in Table 2.7.2.1-1 withstand seismic design basis loads without loss of safety function.
6.a Each of the Class 1E components and instruments identified in Tables 2.7.2.1-2 and 2.7.2.1-3 is powered from its respective Class 1E division.	6.a Tests will be performed by providing a test signal in only one Class 1E division at a time.	6.a The test signal exists at the Class 1E components and instruments identified in Tables 2.7.2.1-2 and 2.7.2.1-3 as being powered from the Class 1E division under test.
6.b Physical separation and electrical isolation are provided (1) between Class 1E divisions, and (2) between Class 1E divisions and non-Class 1E divisions.	6.b Inspection of the as-built Class 1E divisions will be performed.	6.b Physical separation and electrical isolation exist in accordance with NRC RG 1.75 (1) between Class 1E divisions, and (2) between Class 1E divisions and non-Class 1E divisions.

Table 2.7.2.1-4 (4 of 6)

Design Commitment	Inspections, Tests, Analyses	Acceptance Criteria
7.a The ESWS safety-related valves are functionally designed and qualified to perform their safety-related function under the full range of fluid flow, differential pressure, electrical, and temperature conditions up to and including design basis accident conditions.	7.a.i A type test or a combination of type test and analysis will be performed of the ESWS safety-related valves.	7.a.i A Functional Qualification Report performed in conformance to ASME QME-1-2007, as accepted in Regulatory Guide 1.100 Revision 3, exists and concludes that the ESWS safety-related valves listed in Table 2.7.2.1-2 are functionally designed and qualified to perform their safety-related function under the full range of fluid flow, differential pressure, electrical, and temperature conditions up to and including design basis accident conditions.
	7.a.ii A diagnostic stroke test and analysis will be performed of the ESWS safety-related valves under preoperational temperature, differential pressure, and flow conditions.	7.a.ii Each ESWS safety-related valve listed in Table 2.7.2.1-2 strokes fully open and fully closed by remote operation (or manual operation if a manually operated valve) under preoperational temperature, differential pressure, and flow conditions. Analysis based on sufficient diagnostic data demonstrates that the valves will perform at their design-basis capability as established by the type test performed in accordance with 7.a.i.
	7.a.iii Tests of the as-built check valves will be performed under pre-operational test pressure, temperature, and fluid flow conditions.	7.a.iii Each check valve changes position as indicated in Table 2.7.2.1-2 under pre-operational test pressure, temperature, and fluid flow conditions.

Table 2.7.2.1-4 (5 of 6)

Design Commitment		Inspections, Tests, Analyses		Acceptance Criteria	
7.b	After loss of motive power, MOVs identified in Table 2.7.2.1-2 assume the indicated loss of motive power position.	7.b	Tests of the as-built MOVs will be performed under the conditions of loss of motive power.	7.b	Upon loss of motive power, each as-built MOVs identified in Table 2.7.2.1-2 assumes the indicated loss of motive power position.
8.a	Controls exist in the MCR to start and stop the ESW pumps, and to open and close the MOVs identified in Table 2.7.2.1-2.	8.a	Test will be performed using the controls in the MCR to start and stop the ESW pumps, and to open and close the MOVs.	8.a	Controls in the as-built MCR start and stop the ESW pumps, and open and close the MOVs identified in Table 2.7.2.1-2.
8.b	Controls exist in the RSR to start and stop the ESW pumps, and to open and close the MOVs identified in Table 2.7.2.1-2.	8.b	Test will be performed using the controls in the RSR to start and stop the ESW pumps, and to open and close the MOVs.	8.b	Controls in the as-built RSR start and stop the ESW pumps, and open and close the MOVs identified in Table 2.7.2.1-2.
8.c	Displays and alarms exist and are retrievable in the MCR as defined in Tables 2.7.2.1-2 and 2.7.2.1-3.	8.c	Inspections of the as-built displays and alarms in the MCR will be performed.	8.c	Displays and alarms exist and are retrieved in the as-built MCR as defined in Tables 2.7.2.1-2 and 2.7.2.1-3.
8.d	Displays and alarms exist and are retrievable in the RSR as defined in Tables 2.7.2.1-2 and 2.7.2.1-3.	8.d	Inspections of the as-built displays and alarms in the RSR will be performed.	8.d	All displays and alarms exist and are retrieved in the as-built RSR as defined in Tables 2.7.2.1-2 and 2.7.2.1-3.
9.	The two mechanical divisions of the ESWS (A/C & B/D) are physically separated.	9.	Inspection of the as-built mechanical divisions will be performed.	9.	The two mechanical divisions of the ESWS are separated by a divisional wall or a fire barrier.

Table 2.7.2.1-4 (6 of 6)

Design Commitment	Inspections, Tests, Analyses	Acceptance Criteria
10. The ESWS has the capacity to remove heat from the CCWS during power operation, shutdown, refueling, and design basis accident conditions.	10. Testing and analyses will be performed to measure the as-built ESW pumps flow rates.	10. A report exists and concludes that the as-built ESW pumps deliver at least 75,708 L/min (20,000 gpm) of ESW to the CCW heat exchangers during power operation, refueling, and design basis accident conditions and the as-built ESW pumps deliver at least 104,477 L/min (27,600 gpm) of ESW to the CCW heat exchangers during shutdown operation.
11. The ESWS safety-related pumps are functionally designed and qualified to perform their safety-related function under the full range of fluid flow, differential pressure, electrical, and temperature conditions up to and including design basis accident conditions.	11. A type test or a combination of type test and analysis will be performed of the ESWS safety-related pumps.	11. A Functional Qualification Report performed in conformance to ASME QME-1, as accepted in Regulatory Guide 1.100, exists and concludes that the ESWS safety-related pumps listed in Table 2.7.2.1-2 are functionally designed and qualified to perform their safety-related function under the full range of fluid flow, differential pressure, electrical, and temperature conditions up to and including design basis accident conditions.
12. The ESW pumps have net positive suction head (NPSH).	12. Test to measure the as-built ESW pump suction pressure will be performed. Inspection and analyses to determine NPSH available to each pump will be performed based on test data and as-built data.	12. A report exists and concludes that the as-built calculated available NPSH available exceeds each ESW pump's NPSH required.

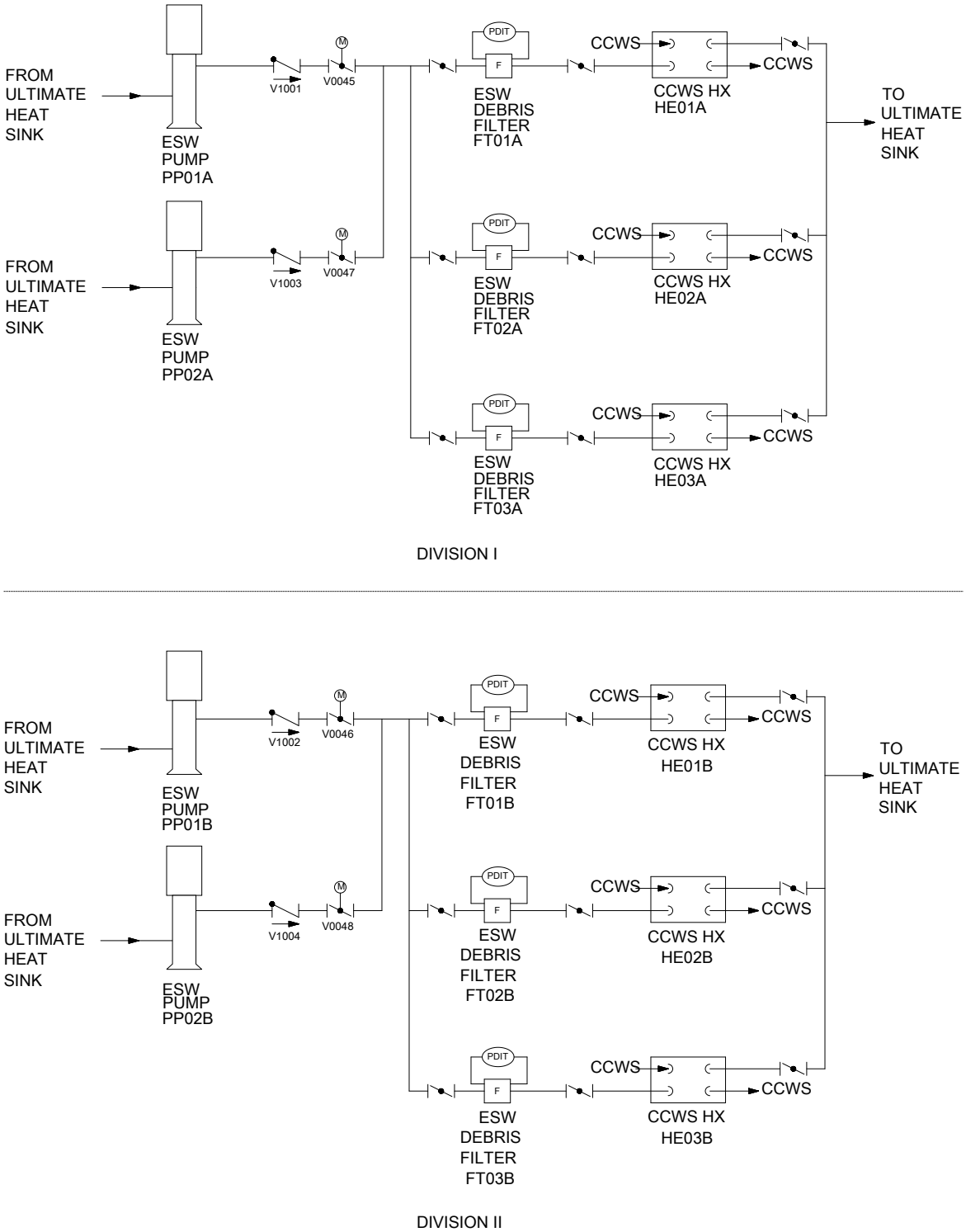

Figure 2.7.2.1-1 Essential Service Water System

2.7.2.2 Component Cooling Water System

2.7.2.2.1 Design Description

The component cooling water system (CCWS) is a closed loop cooling water system that, in conjunction with the essential service water system (ESWS) and the ultimate heat sink (UHS), removes heat generated from the plant's safety-related and non-safety-related components connected to the CCWS.

The CCWS is a safety-related system and has the following safety-related functions:

a. Removes decay heat and waste heat from safety-related equipment necessary for achieving plant safe shutdown and transfers it to the ESWS

b. Protects against leakage of service water into the nuclear island systems

c. Protects against release of radiological contamination into the ultimate heat sink

The CCWS consists of two separate, independent, redundant, closed loop, and safety-related divisions. Either division of the CCWS is capable of supporting 100 percent of the cooling functions required for a safe reactor shutdown. Each division of the CCWS includes three heat exchangers, a surge tank, two CCW pumps, a chemical addition tank, a CCW radiation monitor, piping, valves, controls, and instrumentation. There are two cross connections between divisions.

To meet above functional requirement, the CCWS is designed as follows:

1. The functional arrangement of the CCWS is as described in the Design Description of Subsection 2.7.2.2.1 and in Table 2.7.2.2-1 and as shown in Figure 2.7.2.2-1.

2.a The ASME Code components identified in Table 2.7.2.2-2 are designed and constructed in accordance with ASME Section III requirements.

2.b The ASME Code piping, including supports, identified in Table 2.7.2.2-1 is designed and constructed in accordance with ASME Section III requirements.

3.a Pressure boundary welds in ASME Code components identified in Table 2.7.2.2-2 meet ASME Section III requirements.

3.b Pressure boundary welds in ASME Code piping identified in Table 2.7.2.2-1 meet ASME Section III requirements.

4.a The ASME Code components identified in Table 2.7.2.2-2 retain their pressure boundary integrity at their design pressure.

4.b The ASME Code piping identified in Table 2.7.2.2-1 retains its pressure boundary integrity at its design pressure.

5.a The seismic Category I components and instruments identified in Tables 2.7.2.2-2 and 2.7.2.2-3, including the supports and anchorages, can withstand seismic design basis loads without loss of safety function.

5.b The seismic Category I piping, including supports, identified in Table 2.7.2.2-1 can withstand seismic design basis loads without loss of safety function.

6.a The Class 1E components and instruments identified in Tables 2.7.2.2-2 and 2.7.2.2-3 as being qualified for a harsh environment (and the associated wiring, cables, and terminations) can withstand the environmental conditions that would exist before, during, and following a design basis accident without loss of safety function for the time required to perform the safety function.

6.b Each of the Class 1E components and instruments identified in Tables 2.7.2.2-2 and 2.7.2.2-3 is powered from its respective Class 1E division.

6.c Physical separation and electrical isolation are provided (1) between Class 1E divisions, and (2) between Class 1E divisions and non-Class 1E divisions.

7.a The CCWS safety-related valves are designed and qualified to perform their safety-related function under the full range of fluid flow, differential pressure, electrical, and temperature conditions up to and including design basis accident conditions.

7.b After loss of motive power, MOVs and AOVs identified in Table 2.7.2.2-2 assume the indicated loss of motive power position.

8.a Controls exist in the MCR to start and stop the CCW pumps and CCW makeup pumps, and to open and close the MOVs and AOVs identified in Table 2.7.2.2-2.

8.b Controls exist in the RSR to start and stop the CCW pumps and CCW makeup pumps, and to open and close the MOVs and AOVs identified in Table 2.7.2.2-2.

8.c Displays and alarms exist and are retrievable in the MCR as defined in Tables 2.7.2.2-2 and 2.7.2.2-3.

8.d Displays and alarms exist and are retrievable in the RSR as defined in Tables 2.7.2.2-2 and 2.7.2.2-3.

9. The two mechanical divisions of the CCWS (A/C & B/D) are physically separated except for the cross connection lines between the divisions.

10. The CCWS safety-related pumps are functionally designed and qualified to perform their safety-related function under the full range of fluid flow, differential pressure, electrical, and temperature conditions up to and including design basis accident conditions.

11. The CCWS pumps and CCWS makeup pumps have sufficient net positive suction head (NPSH).

12. The CCWS, in conjunction with the ESWS and UHS, has the capacity to dissipate the heat loads of connected components during power operation, shutdown, refueling and design basis accident conditions for at least 7 days of operation without surge tank makeup.

13. The CCWS non-metallic parts, materials, and lubricants used in safety-related mechanical equipment perform their safety-related function up to the end of their qualified life in the design basis harsh environmental conditions (both internal service conditions and external environmental conditions) experienced during normal operations, anticipated operational occurrences, design-basis accidents, and post accident conditions.

2.7.2.2.2 Inspection, Tests, Analyses, and Acceptance Criteria

The inspection, tests, analyses, and associated acceptance criteria for the CCWS are specified in Table 2.7.2.2-4.

The ITAAC related CIVs and the piping between the CIVs of the CCWS are described in Table 2.11.3-2.

Table 2.7.2.2-1 (1 of 2)

Component Cooling Water System Equipment and Piping Location/Characteristics

Equipment and Piping Name	Location	ASME Section III Class	Seismic Category
CCW heat exchangers	CCWHX Building	3	I
CCW pumps	Auxiliary Building	3	I
CCW surge tanks	Auxiliary Building	3	I
CCW makeup pumps	Auxiliary Building	3	I
Component cooling water supply and return piping and valves excluding the following a) through h) below:	Auxiliary Building, CCWHX Building, EDG Building, Yard	3	I
a) Containment penetration piping of RCP cooler supply line between and including the valves, CC-V231 and CC-V1099 in the division I	Containment Building	2	I
b) Containment penetration piping of RCP cooler return line between and including the valves, CC-V249, CC-V250, and, CC-V1100 in the division I	Containment Building	2	I
c) RCP cooler supply and return piping between the valves, CC-V1099, CC-V249, and CC-V1100 in the division I	Containment Building	-	II
d) Non-essential supply and return piping between the valve CC-V145 and CC-V147 in the division I excluding the following e) through g) below:	Auxiliary Building	-	II
e) Containment penetration piping of letdown heat exchanger supply line between and including the valves CC-V296, CC-V297, and CC-V1685 in the division I	Containment Building	2	I

Table 2.7.2.2-1 (2 of 2)

Equipment and Piping Name	Location	ASME Section III Class	Seismic Category
f) Containment penetration piping of letdown heat exchanger return line between and including the valve CC-V301, CC-V302, and CC-V1686 in the division I	Containment Building	2	I
g) Letdown heat exchanger supply and return piping between the valves, CC-V297, CC-V301, CC-V1685, and CC-V1686 in the division I	Containment Building	-	II
h) Non-essential supply and return piping between the valve CC-V146 and CC-V148 in the auxiliary building of the division II	Auxiliary Building	-	II
i) Non-essential supply and return piping in the compound building of the division II	Compound Building	-	III

Table 2.7.2.2-2 (1 of 3)

Component Cooling Water System Components List

Component Name	Item No.	ASME Section III Class	Seismic Category	Class 1E/ Harsh Envir. Qual.	Control/ Display at MCR	Control/ Display at RSR	Control Signal	Active Safety Function	Loss of Motive Power Position
CCW heat exchangers	CC-HE01A, HE01B, HE02A, HE02B, HE03A, HE03B	3	I	-/-	-/-	-/-	-	-	-
CCW pumps	CC-PP01A, PP01B, PP02A, PP02B	3	I	Yes/No	Yes/Yes	Yes/Yes	EDG Load Sequence, Disch. Pres. Low	Start	-
CCW makeup pumps	CC-PP03A, PP03B	3	I	Yes/No	Yes/Yes	Yes/Yes	CCWSTLAS (2)	Start	-
CCW surge tanks	CC-TK01A, TK01B	3	I	-/-	-/-	-/-	-	-	-
CCW makeup isolation (MOV)	CC-011, 012	3	I	Yes/No	Yes/Yes	Yes/Yes	CCWSTLAS (2)	Open/ Closed	As Is
CCW heat exchangers outlet jogging control (MOV)	CC-021, 022, 023, 024, 025, 026, 031, 032, 033, 034, 035, 036	3	I	Yes/No	Yes/Yes	Yes/Yes	SIAS	Open	As Is
CCW heat exchanger bypass (MOV)	CC-027, 028, 037, 038	3	I	Yes/No	Yes/Yes	Yes/Yes	SIAS	Close	As Is
Containment spray heat exchangers inlet isolation (MOV)	CC-097, 098	3	I	Yes/Yes	Yes/Yes	Yes/Yes	SIAS, CSAS	Open	As Is

Table 2.7.2.2-2 (2 of 3)

Component Name	Item No.	ASME Section III Class	Seismic Category	Class 1E/ Harsh Envir. Qual.	Control/ Display at MCR	Control/ Display at RSR	Control Signal	Active Safety Function	Loss of Motive Power Position
Essential chiller condenser outlet isolation (MOV)	CC-131, 132, 383, 384	3	I	Yes/No	Yes/Yes	Yes/Yes	Chiller pump start/stop	Open	As Is
Essential chiller condenser outlet control (MOV)	CC-901, 902, 905, 906	3	I	Yes/No	Yes/Yes	Yes/Yes	Chiller condenser pressure	Open	Open
Non-essential header inlet and outlet isolation (MOV)	CC-143, 144, 145, 146, 147, 148, 149, 150	3	I	Yes/No	Yes/Yes	Yes/Yes	SIAS, CCWSTILLAS	Close	As Is
EDG cooler inlet isolation (MOV)	CC-181, 182, 191, 192	3	I	Yes/No	Yes/Yes	Yes/Yes	SIAS, EDG Start	Open	As Is
RCP cooler isolation (MOV)	CC-231, 249, 250	2	I	Yes/Yes	Yes/Yes	Yes/Yes	CCWSTILLAS (3)	Close	As Is
Letdown heat exchanger inlet and outlet isolation (MOV)	CC-296, 297, 301, 302	2	I	Yes/Yes	Yes/Yes	Yes/Yes	CIAS	Close	As Is
SC heat exchangers inlet isolation (MOV)	CC-351, 352	3	I	Yes/Yes	Yes/Yes	Yes/Yes	SIAS	Close	As Is
SFP cooling heat exchangers isolation (MOV)	CC-389, 390	3	I	Yes/No	Yes/Yes	Yes/Yes	-	Open	As Is
Cross connection isolation (MOV)	CC-937, 938, 939, 940	3	I	Yes/No	Yes/Yes	Yes/Yes	SIAS	Close	As Is

Table 2.7.2.2-2 (3 of 3)

Component Name	Item No.	ASME Section III Class	Seismic Category	Class 1E/ Harsh Envir. Qual.	Control/ Display at MCR	Control/ Display at RSR	Control Signal	Active Safety Function	Loss of Motive Power Position
CCW pump discharge check	CC-1001, 1002, 1003, 1004	3	I	-/No	-/-	-/-	-	Open/ Closed	-
RCP common line check	CC-1099	2	I	-/Yes	-/-	-/-	-	Open/ Close	-
Containment penetration piping bypass check	CC-1100, 1685, 1686	2	I	-/Yes	-/-	-/-	-	Open/ Closed	-
CCW surge tank vacuum relief	CC-1107, 1108	3	I	-/No	-/-	-/-	-	Open/ Closed	-
CCW surge tank relief	CC-1111, 1112	3	I	-/No	-/-	-/-	-	Open/ Closed	-
CCW makeup pump discharge check	CC-1303, 1304, 1309, 1310	3	I	-/No	-/-	-/-	-	Open/ Closed	-
CCW makeup pump bypass check	CC-1325, 1326	3	I	-/No	-/-	-/-	-	Open/ Closed	-
Demineralized water makeup line check	CC-1317, 1318, 1319, 1320	3	I	-/No	-/-	-/-	-	Open/ Closed	-
Nitrogen supply line check	CC-1109, 1110	3	I	-/No	-/-	-/-	-	Open/ Closed	-
CCW pump recirculate check	CC-1131, 1132, 1133, 1134	3	I	-/No	-/-	-/-	-/-	Open/ Closed	-

(1) Dash(-) indicates not applicable.
(2) CCWSTLAS: CCW surge tank low water level actuation signal
(3) CCWSTLLAS: CCW surge tank low-low water level actuation signal

Table 2.7.2.2-3 (1 of 2)

Component Cooling Water System Instruments List

Instrument Name	Item No.	Location	ASME Section III Class	Seismic Category	Class 1E/ Harsh Envir. Qual.	Display/ Alarm at MCR	Display/ Alarm at RSR
CCW surge tank level	L-011A, 012B	Auxiliary Building	-	I	Yes/No	Yes/Yes	Yes/Yes
CCW surge tank make-up flow	F-003, 004	Auxiliary Building	-	II	No/No	Yes/No	Yes/No
CCW surge tank level	L-009C, 010D	Auxiliary Building	-	I	Yes/No	No/Yes	No/Yes
CCW pump common discharge header pressure	P-053C, 054D	Auxiliary Building	-	I	Yes/No	Yes/Yes	Yes/Yes
CCW pump discharge flow	F-047A, 048B, 049C, 050D	Auxiliary Building	-	I	Yes/No	Yes/Yes	Yes/Yes
Combined CCW heat exchanger inlet temperature	T-055, 056	CCWHX Building	-	I	No/No	Yes/No	Yes/No
SFP cooling heat exchanger outlet flow	F-395, 396	Auxiliary Building	-	II	No/No	Yes/Yes	Yes/Yes
Letdown heat exchanger outlet temperature and flow	T-299, F-300	Containment Building	-	II	No/No	Yes/Yes	Yes/Yes
Shutdown cooling heat exchangers outlet temperature	T-077, 078	Auxiliary Building	-	I	No/No	Yes/No	Yes/No
Charging pump MFHX outlet temperature	T-128	Auxiliary Building	-	II	No/No	Yes/No	Yes/No
Charging pump MFHX outlet flow	F-399	Auxiliary Building	-	II	No/No	Yes/Yes	Yes/Yes
Essential chiller condensers outlet flow	F-135, 136, 387, 388	Auxiliary Building	-	II	No/No	Yes/Yes	Yes/Yes

Table 2.7.2.2-3 (2 of 2)

Instrument Name	Item No.	Location	ASME Section III Class	Seismic Category	Class 1E/ Harsh Envir. Qual.	Display/ Alarm at MCR	Display/ Alarm at RSR
Containment spray heat exchangers outlet flow	F-103, 104	Auxiliary Building	-	II	No/No	Yes/Yes	Yes/Yes
Containment spray MFHX outlet flow	F-121, 122	Auxiliary Building	-	II	No/No	Yes/Yes	Yes/Yes
Shutdown cooling heat exchangers outlet flow	F-355, 356	Auxiliary Building	-	II	No/No	Yes/Yes	Yes/Yes
Shutdown cooling MFHX outlet flow	F-373, 374	Auxiliary Building	-	II	No/No	Yes/Yes	Yes/Yes
EDG cooler outlet flow	F-189, 190, 401,402	Auxiliary Building	-	II	No/No	Yes/Yes	Yes/Yes
CCW heat exchanger outlet flow	F-071A, 072B, 073C, 074D	CCWHX Building	-	I	Yes/No	Yes/No	Yes/No
RCP cooler CCW flow	F-245A/B, 246A/B, 247A/B, 248A/B	Containment Building	-	I	Yes/Yes	Yes/Yes	Yes/Yes
RCP cooler CCW temperature	T-167, 168, 173, 174, 181 ,182, 191, 192	Containment Building	-	I	No/Yes	Yes/No	Yes/No
Combined CCW heat exchanger outlet temperature	T-069A, 070B, 071C, 072D	CCWHX Building	-	I	Yes/No	Yes/Yes	Yes/Yes

(1) Dash(-) indicates not applicable.

Table 2.7.2.2-4 (1 of 9)

Component Cooling Water System ITAAC

Design Commitment	Inspections, Tests, Analyses	Acceptance Criteria
1. The functional arrangement of the CCWS is as described in the Design Description of Subsection 2.7.2.2.1 and in Table 2.7.2.2-1 and as shown in Figure 2.7.2.2-1.	1. Inspection of the as-built CCWS will be performed.	1. The as-built CCWS conforms with the functional arrangement as described in the Design Description of Subsection 2.7.2.2.1 and in Table 2.7.2.2-1 and as shown in Figure 2.7.2.2-1.
2.a The ASME Code components identified in Table 2.7.2.2-2 are designed and constructed in accordance with ASME Section III requirements.	2.a Inspection of the as-built ASME Code components identified in Table 2.7.2.2-2 will be performed and documented in the ASME data report(s).	2.a The ASME Section III data report(s) exist and conclude that the as-built ASME Code components identified in Table 2.7.2.2-2 are designed and constructed in accordance with ASME Section III requirements.
2.b The ASME Code piping, including supports, identified in Table 2.7.2.2-1 is designed and constructed in accordance with ASME Section III requirements.	2.b Inspection of the as-built ASME Code piping, including supports, identified in Table 2.7.2.2-1 will be performed and documented in the ASME data report(s).	2.b The ASME Section III data report(s) exist and conclude that the as-built ASME Code piping, including supports, identified in Table 2.7.2.2-1 is designed and constructed in accordance with ASME Section III requirements.
3.a Pressure boundary welds in ASME Code components identified in Table 2.7.2.2-2 meet ASME Section III requirements.	3.a Inspections of the as-built pressure boundary welds in ASME Code components identified in Table 2.7.2.2-2 will be performed in accordance with the ASME Section III.	3.a A report exists and concludes that the ASME Section III requirements are met for non-destructive examination of the as-built pressure boundary welds in ASME Code components identified in Table 2.7.2.2-2.
3.b Pressure boundary welds in ASME Code piping identified in Table 2.7.2.2-1 meet ASME Section III requirements.	3.b Inspections of the as-built pressure boundary welds in ASME Code piping identified in Table 2.7.2.2-1 will be performed in accordance with the ASME Section III.	3.b A report exists and concludes that the ASME Section III requirements are met for non-destructive examination of the as-built pressure boundary welds in ASME Code piping identified in Table 2.7.2.2-1.

Table 2.7.2.2-4 (2 of 9)

Design Commitment	Inspections, Tests, Analyses	Acceptance Criteria
4.a The ASME Code components identified in Table 2.7.2.2-2 retain their pressure boundary integrity at their design pressure.	4.a A hydrostatic test will be conducted on the as-built ASME Code components identified in Table 2.7.2.2-2 required to be hydrostatically tested by the ASME Section III.	4.a A report exists and concludes that the results of the hydrostatic test of the as-built ASME Code components identified in Table 2.7.2.2-2 conform with ASME Section III requirements.
4.b The ASME Code piping identified in Table 2.7.2.2-1 retains its pressure boundary integrity at its design pressure.	4.b A hydrostatic test will be conducted on the as-built ASME Code piping identified in Table 2.7.2.2-1 required to be hydrostatically tested by the ASME Section III.	4.b A report exists and concludes that the results of the hydrostatic test of the as-built ASME Code piping identified in Table 2.7.2.2-1 conform with ASME Section III requirements.
5.a The seismic Category I components and instruments identified in Tables 2.7.2.2-2 and 2.7.2.2-3, including the supports and anchorages, can withstand seismic design basis loads without loss of safety function.	5.a.i Inspections will be performed to verify that the as-built seismic Category I components and instruments are located in the seismic Category I structure.	5.a.i The as-built seismic Category I components and instruments identified in Tables 2.7.2.2-2 and 2.7.2.2-3 are located in the seismic Category I structure.
	5.a.ii Type tests, analyses or a combination of type tests and analyses of seismic Category I components and instruments will be performed.	5.a.ii A report exists and concludes that the seismic Category I components and instruments identified in Tables 2.7.2.2-2 and 2.7.2.2-3 can withstand seismic design basis loads without loss of safety function.
	5.a.iii Inspections will be performed to verify that the as-built seismic Category I components and instruments, including the supports and anchorages, are seismically bounded by the tested or analyzed conditions.	5.a.iii A report exists and concludes that the as-built seismic Category I components and instruments identified in Tables 2.7.2.2-2 and 2.7.2.2-3, including the supports and anchorages, are seismically bounded by the tested or analyzed conditions.

Table 2.7.2.2-4 (3 of 9)

Design Commitment	Inspections, Tests, Analyses	Acceptance Criteria
5.b The seismic Category I piping, including supports, identified in Table 2.7.2.2-1 can withstand seismic design basis loads without loss of safety function.	5.b.i Inspections will be performed to verify that the as-built seismic Category I piping, including supports, is located in the seismic Category I structure(s).	5.b.i The as-built seismic Category I piping, including supports, identified in Table 2.7.2.2-1 is located in the seismic Category I structure(s).
	5.b.ii Inspections and analyses of the as-built seismic Category I piping, including supports, will be performed.	5.b.ii A report exists and concludes that the as-built seismic Category I piping, including supports, identified in Table 2.7.2.2-1 can withstand seismic design basis loads without loss of safety function.
6.a The Class 1E components and instruments identified in Tables 2.7.2.2-2 and 2.7.2.2-3 as being qualified for a harsh environment (and the associated wiring, cables, and terminations) can withstand the environmental conditions that would exist before, during, and following a design basis accident without loss of safety function for the time required to perform the safety function.	6.a.i Type tests or a combination of type tests and analyses will be performed on Class 1E components and instruments located in a harsh environment.	6.a.i A report exists and concludes that the Class 1E components and instruments identified in Tables 2.7.2.2-2 and 2.7.2.2-3 as being qualified for a harsh environment can withstand the environmental conditions that would exist before, during, and following a design basis accident without loss of safety function for the time required to perform the safety function.
	6.a.ii Inspections will be performed on the as-built Class 1E components and instruments (and the associated wiring, cables, and terminations) located in a harsh environment.	6.a.ii A report exists and concludes that the as-built Class 1E components and instruments identified in Tables 2.7.2.2-2 and 2.7.2.2-3 as being qualified for a harsh environment (and the associated wiring, cables, and terminations) are bounded by type tests or a combination of type tests and analyses.

Table 2.7.2.2-4 (4 of 9)

Design Commitment	Inspections, Tests, Analyses	Acceptance Criteria
6.b Each of the Class 1E components and instruments identified in Tables 2.7.2.2-2 and 2.7.2.2-3 is powered from its respective Class 1E division.	6.b Tests will be performed by providing a test signal in only one Class 1E division at a time.	6.b The test signal exists at the Class 1E components and instruments identified in Tables 2.7.2.2-2 and 2.7.2.2-3 as being powered from the Class 1E division under test.
6.c Physical separation and electrical isolation are provided (1) between Class 1E divisions, and (2) between Class 1E divisions and non-Class 1E divisions.	6.c Inspection of the as-built Class 1E divisions will be performed.	6.c Physical separation and electrical isolation exist in accordance with NRC RG 1.75 (1) between Class 1E divisions, and (2) between Class 1E divisions and non-Class 1E divisions.
7.a The CCWS safety-related valves are functionally designed and qualified to perform their safety-related function under the full range of fluid flow, differential pressure, electrical, and temperature conditions up to and including design basis accident conditions.	7.a.i A type test or a combination of type test and analysis will be performed of the CCWS safety-related valves.	7.a.i A Functional Qualification Report performed in conformance to ASME QME-1-2007, as accepted in Regulatory Guide 1.100 Revision 3, exists and concludes that the CCWS safety-related valves listed in Table 2.7.2.2-2 are functionally designed and qualified to perform their safety-related function under the full range of fluid flow, differential pressure, electrical, and temperature conditions up to and including design basis accident conditions.

Table 2.7.2.2-4 (5 of 9)

Design Commitment	Inspections, Tests, Analyses	Acceptance Criteria
7.a (cont.)	7.a.ii A diagnostic stroke test and analysis will be performed of the CCWS safety-related valves under preoperational temperature, differential pressure, and flow conditions.	7.a.ii Each CCWS safety-related valve listed in Table 2.7.2.2-2 strokes fully open and fully closed by remote operation (or manual operation if a manually operated valve) under preoperational temperature, differential pressure, and flow conditions. Analysis based on sufficient diagnostic data demonstrates that the valves will perform at their design basis capability as established by the type test performed in accordance with 7.a.i.
	7.a.iii Tests of the as-built check valves will be performed under pre-operational test pressure, temperature, and fluid flow conditions.	7.a.iii Each check valve changes position as indicated in Table 2.7.2.2-2 under pre-operational test pressure, temperature, and fluid flow conditions.
7.b After loss of motive power, MOVs and AOVs identified in Table 2.7.2.2-2 assume the indicated loss of motive power position.	7.b Test of the as-built MOVs and AOVs will be performed under the conditions of loss of motive power.	7.b Upon loss of motive power, each as-built MOVs or AOVs identified in Table 2.7.2.2-2 assumes the indicated loss of motive power position.
8.a Controls exist in the MCR to start and stop the CCW pumps and CCW makeup pumps, and to open and close the MOVs and AOVs identified in Table 2.7.2.2-2.	8.a Tests will be performed using the controls in the MCR to start and stop the CCW pumps and CCW makeup pumps, and to open and close the MOVs and AOVs.	8.a Controls in the as-built MCR start and stop the CCW pumps and CCW makeup pumps, and open and close the MOVs and AOVs identified in Table 2.7.2.2-2.

Table 2.7.2.2-4 (6 of 9)

Design Commitment	Inspections, Tests, Analyses	Acceptance Criteria
8.b Controls exist in the RSR to start and stop the CCW pumps and CCW makeup pumps, and to open and close the MOVs and AOVs identified in Table 2.7.2.2-2.	8.b Tests will be performed using the controls in the RSR to start and stop the CCW pumps and CCW makeup pumps, and to open and close the MOVs and AOVs.	8.b Controls in the as-built RSR start and stop the CCW pumps and CCW makeup pumps, and open and close the MOVs and AOVs identified in Table 2.7.2.2-2.
8.c Displays and alarms exist and are retrievable in the MCR as defined in Tables 2.7.2.2-2 and 2.7.2.2-3.	8.c Inspections of the as-built displays and alarms in the MCR will be performed.	8.c Displays and alarms exist and are retrieved in the as-built MCR as defined in Tables 2.7.2.2-2 and 2.7.2.2-3.
8.d Displays and alarms exist and are retrievable in the RSR as defined in Tables 2.7.2.2-2 and 2.7.2.2-3.	8.d Inspections of the as-built displays and alarms in the RSR will be performed.	8.d Displays and alarms exist and are retrieved in the as-built RSR as defined in Tables 2.7.2.2-2 and 2.7.2.2-3.
9. The two mechanical divisions of the CCWS (A/C & B/D) are physically separated except for the cross connection lines between the divisions.	9. Inspection of the as-built mechanical divisions will be performed.	9. The two mechanical divisions of the CCWS are physically separated by a divisional wall that is a 3-hour rated fire barrier, except for cross connection lines which are normally separated by the redundant motor operated isolation valves.

Table 2.7.2.2-4 (7 of 9)

Design Commitment	Inspections, Tests, Analyses	Acceptance Criteria
10. The CCWS safety-related pumps are functionally designed and qualified to perform their safety-related function under the full range of fluid flow, differential pressure, electrical, and temperature conditions up to and including design basis accident conditions.	10. A type test or a combination of type test and analysis will be performed of the CCWS safety-related pumps.	10. A Functional Qualification Report performed in conformance to ASME QME-1, as accepted in Regulatory Guide 1.100, exists and concludes that the CCWS safety-related pumps listed in Table 2.7.2.2-2 are functionally designed and qualified to perform their safety-related function under the full range of fluid flow, differential pressure, electrical, and temperature conditions up to and including design basis accident conditions.
11. The CCWS pumps and CCWS makeup pumps have sufficient net positive suction head (NPSH).	11. Test to measure the as-built CCW pump and CCW makeup pump suction pressure will be performed. Inspection and analyses to determine NPSH available to each pump will be performed based on test data and as-built data.	11. A report exists and concludes that the as-built calculated NPSH available exceeds each CCW pump's and CCW makeup pump's NPSH required.
12. The CCWS, in conjunction with the ESWS and UHS, has the capacity to dissipate the heat loads of connected components during power operation, shutdown, refueling and design basis accident conditions for at least 7 days of operation without surge tank makeup.	12.a A test of the as-built CCW pump will be performed to measure the flow rates to the CCW heat exchangers.	12.a The as-built CCW Pump identified in Table 2.7.2.2-2 delivers at least 43,532 L/min (11,500 gpm) of CCW to the CCW heat exchangers during power operation and design basis accident conditions and at least 40,504 L/min (10,700 gpm) of CCW to the CCW heat exchangers during shutdown and refueling operations.

Table 2.7.2.2-4 (8 of 9)

Design Commitment	Inspections, Tests, Analyses	Acceptance Criteria
12. (cont.)	12.b Analyses will be performed to determine the heat removal capacities of the as-built CCW heat exchangers.	12.b A report exists and concludes that the product of the overall heat transfer coefficient and the effective heat exchange area, UA, of each CCW heat exchanger identified in Table 2.7.2.2-2 is greater than or equal to 7.5 × 106 cal/hr-°C (16.53 × 106 Btu/hr-°F).
	12.c Inspections and analyses will be performed to confirm the as-built CCW surge tank volume of 7 days operation without makeup.	12.c The as-built CCW surge tank volume is greater than or equal to the design volume of 32,200 L (8,500 gal).
	12.d Tests will be performed to determine the flow rate to the CS heat exchanger.	12.d The as-built CCW pump delivers at least 30,283 L/min (8,000 gpm) of CCW to the as-built CS heat exchanger.
	12.e Tests will be performed to determine the flow rate to the SC heat exchanger.	12.e The as-built CCW pump delivers at least 41,640 L/min (11,000 gpm) of CCW to the as-built SC heat exchanger.
	12.f Tests will be performed to determine the flow rate to each essential chiller condenser.	12.f The as-built CCW pump delivers at least 7,874 L/min (2,800 gpm) of CCW to one of two as-built essential chiller condensers.
	12.g Tests will be performed to determine the flow rate to the SFPC heat exchanger.	12.g The as-built CCW pump delivers at least 13,249 L/min (3,500 gpm) of CCW to the as-built SFPC heat exchanger.
	12.h Tests will be performed to determine the flow rate to each emergency diesel generator.	12.h The as-built CCW pump delivers at least 18,170 L/min (2,400 gpm) and 14,612 L/min (1,930 gpm) of CCW to the as-built emergency diesel generator A/B and C/D respectively.

Table 2.7.2.2-4 (9 of 9)

Design Commitment	Inspections, Tests, Analyses	Acceptance Criteria
12. (cont.)	12.i Tests will be performed to determine the flow rate to each RCP coolers.	12.i The as-built CCW pump delivers at least 1,675 L/min (442.5 gpm) of CCW to each as-built RCP coolers.
13. The CCWS non-metallic parts, materials, and lubricants used in safety-related mechanical equipment perform their safety-related function up to the end of their qualified life in the design basis harsh environmental conditions (both internal service conditions and external environmental conditions) experienced during normal operations, anticipated operational occurrences, design-basis accidents, and post accident conditions.	13. A type test or a combination of type test and analysis will be performed of the CCWS non-metallic parts, materials, and lubricants used in safety-related mechanical equipment.	13. A report exists and concludes that the non-metallic parts, materials, and lubricants used in safety-related mechanical equipment listed in Table 2.7.2.2-2 perform their safety-related function up to the end of their qualified life under the design basis harsh environmental conditions (both internal service conditions and external environmental conditions) experienced during normal operations, anticipated operational occurrences, design-basis accidents, and post accident conditions.

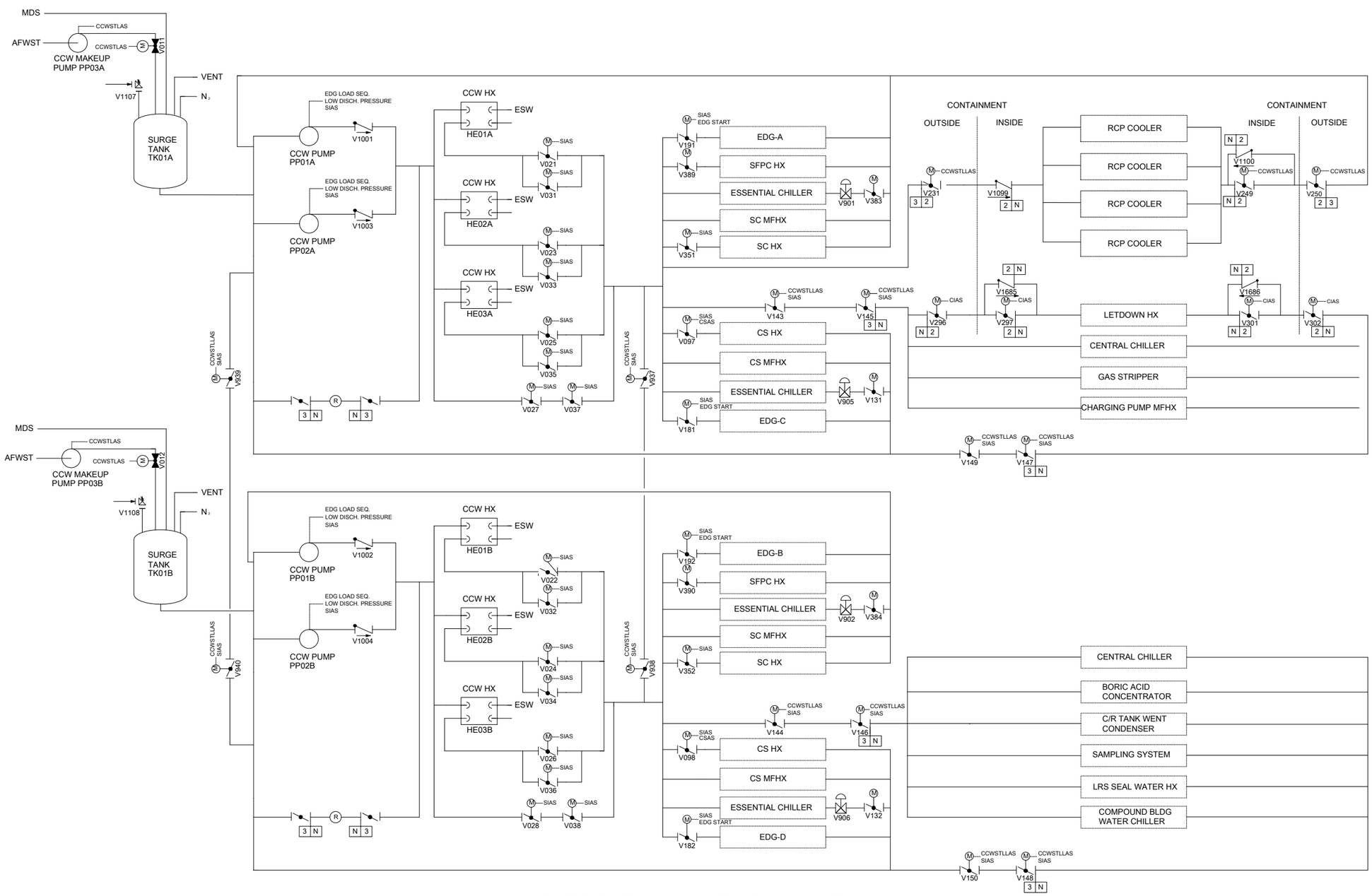

Figure 2.7.2.2-1 Component Cooling Water System

2.7.2.3 Essential Chilled Water System

2.7.2.3.1 Design Description

The essential chilled water system (ECWS) is a safety-related closed loop chilled water system that serves safety-related HVAC cooling loads. The ECWS has the safety-related function that provides chilled water to safety-related air handling units and cubicle coolers.

The ECWS consists of two divisions. Each division includes two essential chillers, two ECW pumps, an ECW compression tank, an ECW makeup pump, an ECW air separator, piping, valves, controls and instrumentation. The ECWS is located in the auxiliary building.

Makeup water to the ECWS is supplied from the demineralized water makeup system. A safety-related seismic Category I makeup line is also provided to each division from the auxiliary feedwater system.

The ECWS is designed as follows:

1. The functional arrangement of the ECWS is as described in the Design Description of Subsection 2.7.2.3.1 and in Table 2.7.2.3-1 and as shown in Figure 2.7.2.3-1.

2.a The ASME Code components identified in Table 2.7.2.3-2 are designed and constructed in accordance with ASME Section III requirements.

2.b The ASME Code piping, including supports, identified in Table 2.7.2.3-1 is designed and constructed in accordance with ASME Section III requirements.

3.a Pressure boundary welds in ASME Code components identified in Table 2.7.2.3-2 meet ASME Section III requirements.

3.b Pressure boundary welds in ASME Code piping identified in Table 2.7.2.3-1 meet ASME Section III requirements.

4.a The ASME Code components identified in Table 2.7.2.3-2 retain their pressure boundary integrity at their design pressure.

4.b The ASME Code piping identified in Table 2.7.2.3-1 retains its pressure boundary integrity at its design pressure.

5.a The seismic Category I components and instruments identified in Tables 2.7.2.3-2 and 2.7.2.3-3, including the supports and anchorages, withstand seismic design basis loads without loss of safety function.

5.b The seismic Category I piping, including supports, identified in Tables 2.7.2.3-1 withstand seismic design basis loads without loss of safety function.

6.a Each of the Class 1E components and instruments identified in Tables 2.7.2.3-2 and 2.7.2.3-3 is powered from its respective Class 1E division.

6.b Physical separation and electrical isolation are provided (1) between Class 1E divisions, and (2) between Class 1E divisions and non-Class 1E divisions.

7.a The ECWS safety-related valves are designed and qualified to perform their safety-related function under the full range of fluid flow, differential pressure, electrical, and temperature conditions up to and including design basis accident conditions.

7.b After loss of motive power, AOVs identified in Table 2.7.2.3-2 assume the indicated loss of motive power position.

8.a Controls exist in the MCR to start and stop the essential chillers and pumps identified in Table 2.7.2.3-2.

8.b Controls exist in the RSR to start and stop the essential chillers and pumps identified in Table 2.7.2.3-2.

8.c Displays and alarms exist and are retrievable in the MCR as defined in Tables 2.7.2.3-2 and 2.7.2.3-3.

8.d Displays and alarms exist and are retrievable in the RSR as defined in Tables 2.7.2.3-2 and 2.7.2.3-3.

9. The two mechanical divisions of the ECWS are physically separated.

10. The ECWS safety-related pumps are functionally designed and qualified to perform their safety-related function under the full range of fluid flow, differential pressure, electrical, and temperature conditions up to and including design basis accident conditions.

11. The ECW pumps and ECW makeup pumps have sufficient net positive suction head (NPSH).

12. The ECW compression tank accommodates water volume due to thermal expansion and contraction, and 7 day system operation without normal makeup.

13. The ECWS has the capability to remove heat from safety-related HVAC equipment cooling coils during plant normal, abnormal and accident conditions.

2.7.2.3.2 Inspections, Tests, Analyses, and Acceptance Criteria

Table 2.7.2.3-4 specifies the inspections, tests, analyses, and associated acceptance criteria for the essential chilled water system.

Table 2.7.2.3-1

Essential Chilled Water System Equipment and Piping Location/Characteristics

Equipment and Piping Name	Location	ASME Section III Class	Seismic Category
Essential chiller unit	Auxiliary Building	3	I
ECW pump	Auxiliary Building	3	I
ECW makeup pump	Auxiliary Building	3	I
ECW compression tank	Auxiliary Building	3	I
Essential chilled water supply and return piping and valves for the division I	Auxiliary Building	3	I
Essential chilled water supply and return piping and valves for the division II	Auxiliary Building	3	I
ECW makeup pump discharge piping to ECW compression tank	Auxiliary Building	3	I

Table 2.7.2.3-2 (1 of 2)

Essential Chilled Water System Components List

Component Name	Item No.	ASME Section III Class	Seismic Category	Class 1E/ Harsh Envir. Qual.	Control/ Display at MCR	Control/ Display at RSR	Control Signal	Active Safety Function	Loss of Motive Power Position
ECW pump	WO-PP01A, PP02A, PP01B, PP02B	3	I	Yes/No	Yes/Yes	Yes/Yes	-	Start	-
ECW makeup pump	WO-PP03A, PP03B	3	I	Yes/No	Yes/Yes	Yes/Yes	-	Start	-
Essential chiller unit	WO-CH01A, CH02A, CH01B, CH02B	3	I	Yes/No	Yes/Yes	Yes/Yes	-	Start	-
ECW compression tank	WO-TK01A, TK01B	3	I	-/-	-/-	-/-	-	-	-
ECW air separator	WO-TK02A, TK02B	3	I	-/-	-/-	-/-	-	-	-
Makeup line check valves	WO-V1003A, V1032A, V1003B, V1032B	3	I	-/-	-/-	-/-	-	Open	-
Nitrogen supply check valves	WO-V1031A, V1031B	3	I	-/-	-/-	-/-	-	Open	-
ECW pump discharge check valves	WO-V1010A, V1014A, V1010B, V1014B	3	I	-/-	-/-	-/-	-	Open	-
ECW makeup pump discharge check valves	WO-V1011A, V1011B, V1022A, V1022B	3	I	-/-	-/-	-/-	-	Open	-

Table 2.7.2.3-2 (2 of 2)

Component Name	Item No.	ASME Section III Class	Seismic Category	Class 1E/ Harsh Envir. Qual.	Control/ Display at MCR	Control/ Display at RSR	Control Signal	Active Safety Function	Loss of Motive Power Position
ECW compression tank relief valves	WO-V1001A, V1001B	3	I	-/-	-/-	-/-	-	Open	-
Control room supply AHU chilled water 3-way valves (AOV)	WO-V0906A, V0906B, V0906C, V0906D	3	I	Yes/No	-/-	-/-	-	Open	Open
EDG room normal supply AHU chilled water 3-way valves (AOV)	WO-V0917A, V0917B, V0918A, V0918B	3	I	Yes/No	-/-	-/-	-	Open	Open

(1) Dash(-) indicates not applicable.

Table 2.7.2.3-3

Essential Chilled Water System Instruments List

Instrument Name	Item No.	Location	ASME Section III Class	Seismic Category	Class 1E/ Harsh Envir. Qual.	Display/ Alarm at MCR	Display/ Alarm at RSR
ECW compression tank level	LS-001A, 002B, 003C, 004D	Auxiliary Building	3	I	Yes/No	No/Yes	No/Yes

Table 2.7.2.3-4 (1 of 7)

Essential Chilled Water System ITAAC

Design Commitment	Inspections, Tests, Analyses	Acceptance Criteria
1. The functional arrangement of the ECWS is as described in the Design Description of Subsection 2.7.2.3.1 and in Table 2.7.2.3-1 and as shown in Figure 2.7.2.3-1.	1. Inspection of the as-built ECWS will be performed.	1. The as-built ECWS conforms with the functional arrangement as described in the Design Description of Subsection 2.7.2.3.1 and in Table 2.7.2.3-1 and as shown in Figure 2.7.2.3-1.
2.a The ASME Code components identified in Table 2.7.2.3-2 are designed and constructed in accordance with ASME Section III requirements.	2.a Inspection of the as-built ASME Code components identified in Table 2.7.2.3-2 will be performed and documented in the ASME data report(s).	2.a The ASME Section III data report(s) exist and conclude that the as-built ASME Code components identified in Table 2.7.2.3-2 are designed and constructed in accordance with ASME Section III requirements.
2.b The ASME Code piping, including supports, identified in Table 2.7.2.3-1 is designed and constructed in accordance with ASME Section III requirements.	2.b Inspection of the as-built ASME Code piping, including supports, identified in Table 2.7.2.3-1 will be performed and documented in the ASME data report(s).	2.b The ASME Section III data report(s) exist and conclude that the as-built ASME Code piping, including supports, identified in Table 2.7.2.3-1 is designed and constructed in accordance with ASME Section III requirements.
3.a Pressure boundary welds in ASME Code components identified in Table 2.7.2.3-2 meet ASME Section III requirements.	3.a Inspections of the as-built pressure boundary welds in ASME Code components identified in Table 2.7.2.3-2 will be performed in accordance with the ASME Section III.	3.a A report exists and concludes that ASME Section III requirements are met for non-destructive examination of the as-built pressure boundary welds in ASME Code components identified in Table 2.7.2.3-2.
3.b Pressure boundary welds in ASME Code piping identified in Table 2.7.2.3-1 meet ASME Section III requirements.	3.b Inspections of the as-built pressure boundary welds in ASME Code piping identified in Table 2.7.2.3-1 will be performed in accordance with the ASME Section III.	3.b A report exists and concludes that the ASME Section III requirements are met for non-destructive examination of the as-built pressure boundary welds in ASME Code piping identified in Table 2.7.2.3-1.

Table 2.7.2.3-4 (2 of 7)

Design Commitment	Inspections, Tests, Analyses	Acceptance Criteria
4.a The ASME Code components identified in Table 2.7.2.3-2 retain their pressure boundary integrity at their design pressure.	4.a A hydrostatic test will be conducted on the as-built ASME Code components identified in Table 2.7.2.3-2 required to be hydrostatically tested by the ASME Section III.	4.a A report exists and concludes that the results of the hydrostatic test of the as-built ASME Code components identified in Table 2.7.2.3-2 conform with ASME Section III requirements.
4.b The ASME Code piping identified in Table 2.7.2.3-1 retains its pressure boundary integrity at its design pressure.	4.b A hydrostatic test will be conducted on the as-built ASME Code piping identified in Table 2.7.2.3-1 required to be hydrostatically tested by the ASME Section III.	4.b A report exists and concludes that the results of the hydrostatic test of the as-built ASME Code piping identified in Table 2.7.2.3-1 conform with ASME Section III requirements.
5.a The seismic Category I components and instruments identified in Tables 2.7.2.3-2 and 2.7.2.3-3, including the supports and anchorages, withstand seismic design basis loads without loss of safety function.	5.a.i Inspections will be performed to verify that the as-built seismic Category I components and instruments are located in the seismic Category I structure.	5.a.i The as-built seismic Category I components and instruments identified in Tables 2.7.2.3-2 and 2.7.2.3-3 are located in the seismic Category I structure.
	5.a.ii Type tests, analyses, or a combination of type tests and analyses of seismic Category I components and instruments will be performed.	5.a.ii A report exists and concludes that the seismic Category I components and instruments identified in Tables 2.7.2.3-2 and 2.7.2.3-3 withstand seismic design basis loads without loss of safety function.
	5.a.iii Inspections will be performed to verify that the as-built seismic Category I components and instruments, including the supports and anchorages, are seismically bounded by the tested or analyzed conditions.	5.a.iii A report exists and concludes that the as-built seismic Category I components and instruments identified in Tables 2.7.2.3-2 and 2.7.2.3-3, including the supports and anchorages, are seismically bounded by the tested or analyzed conditions.

Table 2.7.2.3-4 (3 of 7)

Design Commitment	Inspections, Tests, Analyses	Acceptance Criteria
5.b The seismic Category I piping, including supports, identified in Table 2.7.2.3-1 withstand seismic design basis loads without loss of safety function.	5.b.i Inspections will be performed to verify that the as-built seismic Category I piping, including supports, is located in the seismic Category I structure.	5.b.i The as-built seismic Category I piping, including supports, identified in Table 2.7.2.3-1 is located in the seismic Category I structure.
	5.b.ii Inspections and analyses of the as-built seismic Category I piping, including supports, will be performed.	5.b.ii A report exists and concludes that the as-built seismic Category I piping, including supports, identified in Table 2.7.2.3-1 withstand seismic design basis loads without loss of safety function.
6.a Each of the Class 1E components and instruments identified in Tables 2.7.2.3-2 and 2.7.2.3-3 is powered from its respective Class 1E division.	6.a Test will be performed by providing a test signal in only one Class 1E division at a time.	6.a The test signal exists at the Class 1E components and instruments identified in Tables 2.7.2.3-2 and 2.7.2.3-3 as being powered from the Class 1E division under test.
6.b Physical separation and electrical isolation are provided (1) between Class 1E divisions, and (2) between Class 1E divisions and non-Class 1E divisions.	6.b Inspection of the as-built Class 1E divisions will be performed.	6.b Physical separation and electrical isolation exist in accordance with NRC RG 1.75 (1) between Class 1E divisions, and (2) between Class 1E divisions and non-Class 1E divisions.

Table 2.7.2.3-4 (4 of 7)

Design Commitment	Inspections, Tests, Analyses	Acceptance Criteria
7.a The ECWS safety-related valves are functionally designed and qualified to perform their safety-related function under the full range of fluid flow, differential pressure, electrical, and temperature conditions up to and including design basis accident conditions.	7.a.i A type test or a combination of type test and analyses will be performed to demonstrate their capabilities of the ECWS safety-related valves.	7.a.i A Functional Qualification Report performed in conformance to ASME QME-1-2007, as accepted in Regulatory Guide 1.100 Revision 3, exists and concludes that the ECWS safety-related valves listed in Table 2.7.2.3-2 are functionally designed and qualified to perform their safety-related function under the full range of fluid flow, differential pressure, electrical, and temperature conditions up to and including design basis accident conditions.
	7.a.ii A diagnostic stroke test and analysis will be performed of the ECWS safety-related valves under preoperational temperature, differential pressure, and flow conditions.	7.a.ii Each ECWS safety-related valve listed in Table 2.7.2.3-2 strokes fully open and fully closed by remote operation (or manual operation if a manually operated valve) under preoperational temperature, differential pressure, and flow conditions. Analysis based on sufficient diagnostic data demonstrates that the valves will perform at their design-basis capability as established by the type test performed in accordance with 7.a.i.

Table 2.7.2.3-4 (5 of 7)

Design Commitment	Inspections, Tests, Analyses	Acceptance Criteria
7.a (cont.)	7.a.iii Tests of the as-built check valves will be performed under pre-operational test pressure, and fluid flow conditions.	7.a.iii Each check valve changes position as indicated in Table 2.7.2.3-2 under pre-operational test pressure, and fluid flow conditions.
7.b After loss of motive power, AOVs identified in Table 2.7.2.3-2 assume the indicated loss of motive power position.	7.b Test of the as-built AOVs will be performed under the conditions of loss of motive power.	7.b Upon loss of motive power, each as-built AOV identified in Table 2.7.2.3-2 assumes the indicated loss of motive position.
8.a Controls exist in the MCR to start and stop the essential chillers and pumps identified in Table 2.7.2.3-2.	8.a Tests will be performed using the controls in the MCR to start and stop the essential chillers and pumps.	8.a Controls in the as-built MCR start and stop the essential chillers and pumps identified in Table 2.7.2.3-2.
8.b Controls exist in the RSR to start and stop the essential chillers and pumps identified in Table 2.7.2.3-2.	8.b Tests will be performed using the controls in the RSR to start and stop the essential chillers and pumps.	8.b Controls in the as-built RSR start and stop the essential chillers and pumps identified in Table 2.7.2.3-2.
8.c Displays and alarms exist and are retrievable in the MCR as defined in Tables 2.7.2.3-2 and 2.7.2.3-3.	8.c Inspections of the as-built displays and alarms in the MCR will be performed.	8.c Displays and alarms exist and are retrieved in the as-built MCR as defined in Tables 2.7.2.3-2 and 2.7.2.3-3.

Table 2.7.2.3-4 (6 of 7)

Design Commitment	Inspections, Tests, Analyses	Acceptance Criteria
8.d Displays and alarms exist and are retrievable in the RSR as defined in Tables 2.7.2.3-2 and 2.7.2.3-3.	8.d Inspections of the as-built displays and alarms in the RSR will be performed.	8.d Displays and alarms exist and are retrieved in the as-built RSR as defined in Tables 2.7.2.3-2 and 2.7.2.3-3.
9. The two mechanical divisions of the ECWS are physically separated.	9. Inspections of the as-built mechanical divisions will be performed.	9. The two mechanical divisions of the ECWS are physically separated by a divisional wall that is a 3-hour rated fire barrier.
10. The ECWS safety-related pumps are functionally designed and qualified to perform their safety-related function under the full range of fluid flow, differential pressure, electrical, and temperature conditions up to and including design basis accident conditions.	10. A type test or a combination of type test and analysis will be performed of the ECWS safety-related pumps.	10. A Functional Qualification Report performed in conformance to ASME QME-1, as accepted in Regulatory Guide 1.100, exists and concludes that the ECWS safety-related pumps listed in Table 2.7.2.3-2 are functionally designed and qualified to perform their safety-related function under the full range of fluid flow, differential pressure, electrical, and temperature conditions up to and including design basis accident conditions.

Table 2.7.2.3-4 (7 of 7)

Design Commitment	Inspections, Tests, Analyses	Acceptance Criteria
11. The ECW pumps and ECW makeup pumps have sufficient net positive suction head (NPSH).	11. Test to measure the as-built ECW pump and ECW makeup pump suction pressure will be performed. Inspection and analyses to determine NPSH available to each pump will be performed. The analyses will be performed using the vendor's pump NPSH required test results and the following information: - pressure losses of pump inlet piping and components, and - suction head from the ECW compression tank with its operating pressure and minimum level.	11. A report exists and concludes that the as-built calculated NPSH available exceeds each ECW pump's and ECW makeup pump's NPSH required.
12. The ECW compression tank accommodates liquid volume due to thermal expansion and contraction, and 7 day system operation without normal makeup.	12. Inspection and analysis will be performed on the as-built ECW compression tank size to verify that tank accommodates water volume due to thermal expansion and contraction, and 7 day system operation without normal makeup.	12. A report exists and concludes that the as-built ECW compression tank accommodates the water volume due to thermal expansion and contraction, and 7 day system operation without normal makeup.
13. The ECWS has the capability to remove heat from safety-related HVAC equipment cooling coils during plant normal, abnormal and accident conditions	13.a Tests to verify the heat removal capability of the as-built ECWS will be performed.	13.a A report exists and concludes that the heat removal capability of the as-built ECWS is greater than or equal to design value during plant normal, abnormal and accident conditions
	13.b Testing will be performed to measure the as-built ECW pump flow rate.	13.b The as-built ECW pump is capable of delivering its design flow rate during plant normal, abnormal and accident conditions.

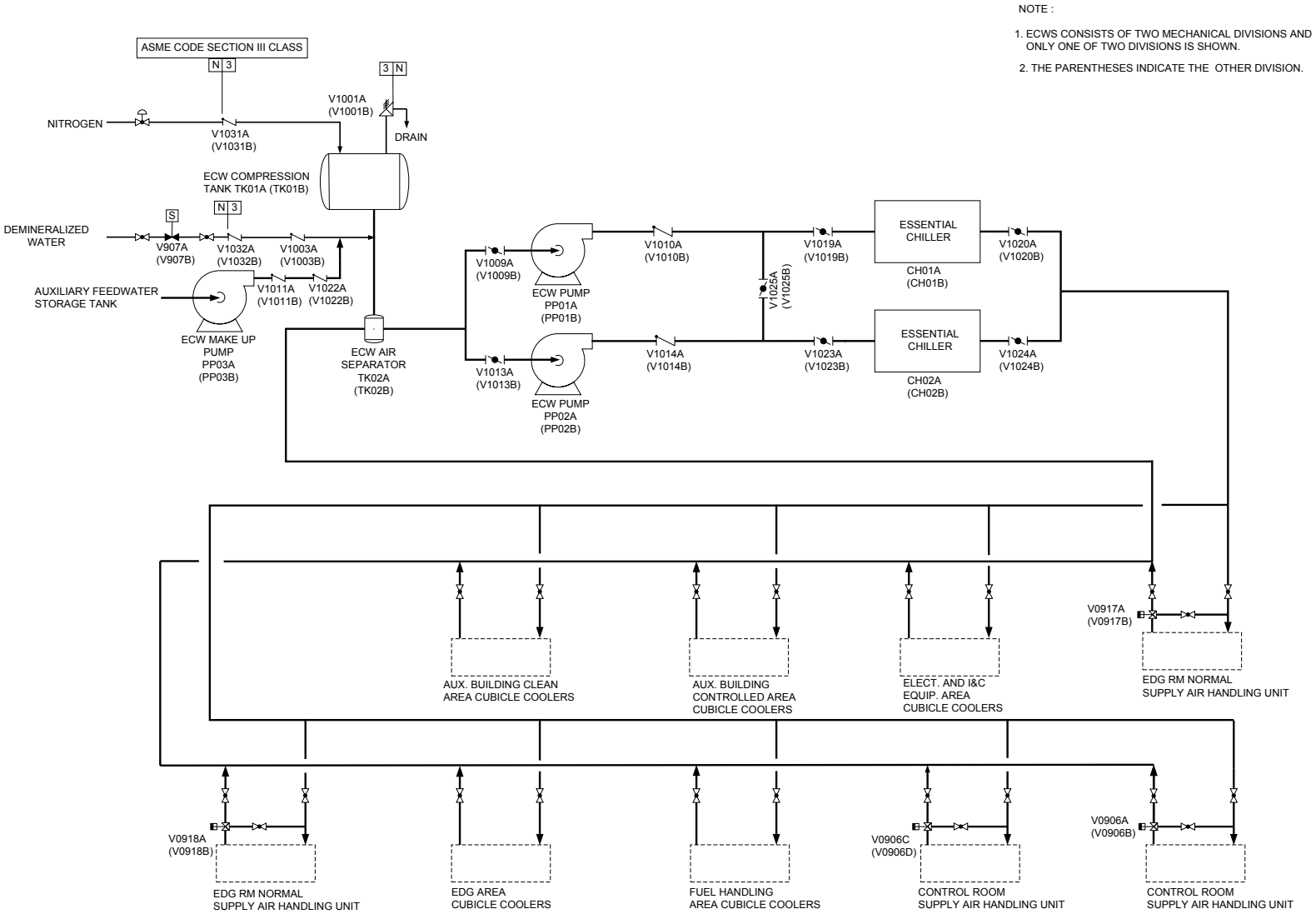

Figure 2.7.2.3-1 Essential Chilled Water System

2.7.2.4 Plant Chilled Water System

2.7.2.4.1 Design Description

The plant chilled water system (PCWS) is a non-safety-related closed loop chilled water system that serves non-safety-related HVAC cooling loads, with the exception of containment isolation valves (CIVs) and the piping between the CIVs that are safety-related, ASME Section III Class 2 and seismic Category I as described in Subsection 2.11.3. The PCWS performs the containment isolation function for the PCW lines penetrating the containment.

The PCWS consists of central chilled water subsystem and compound building chilled water subsystem. The central chilled water subsystem is located in the auxiliary building and provides chilled water to the reactor containment fan coolers (RCFCs) and reactor cavity air handling unit (AHU) located in the reactor containment building. This subsystem also provides chilled water to AHUs and cubicle coolers located in auxiliary building and turbine generator building. The compound building chilled water subsystem is located in the compound building and provides chilled water to the AHUs, cubicle coolers and gaseous radwaste system package located in the compound building. The central chilled water subsystem consists of four chillers, two chilled water pumps, an air separator, a compression tank, a chemical additive tank, associated piping, controls and instrumentation. The compound building chilled water subsystem consists of three chillers, two chilled water pumps, an air separator, a compression tank, a chemical additive tank, associated piping, controls and instrumentation.

To meet the above functional requirements, the PCWS is designed as follows:

1. The functional arrangement of the PCWS is as described in the Design Description of Subsection 2.7.2.4.1.

2.7.2.4.2 Inspections, Tests, Analyses, and Acceptance Criteria

Table 2.7.2.4-1 specifies the inspections, tests, analyses, and associated acceptance criteria for plant chilled water system.

The ITAAC related to the CIVs and the piping between the CIVs of the PCWS are described in Table 2.11.3-2.

Table 2.7.2.4-1

Plant Chilled Water System ITAAC

Design Commitment	Inspections, Tests, Analyses	Acceptance Criteria
1. The functional arrangement of the PCWS is as described in the Design Description of Subsection 2.7.2.4.1.	1. Inspection of the as-built PCWS will be performed.	1. The as-built PCWS conforms with the functional arrangement as described in the Design Description of Subsection 2.7.2.4.1.

2.7.2.5 Equipment and Floor Drainage System

2.7.2.5.1 Design Description

The equipment and floor drainage system (EFDS) has no safety function except the containment isolation and flooding level detection capability. The EFDS collects radioactive and potentially radioactive liquid waste at atmospheric pressure, from equipment and floor drainage of the reactor containment building, auxiliary building, compound building, CVCS yard tanks and the turbine generator building, and transports liquid waste to the liquid waste management system (LWMS). All drainages are conveyed by gravity to their respective building sumps and are then pumped to the LWMS. Radioactive contamination in turbine generator building sump is continuously monitored by a radiation monitor and alarmed in the main control room (MCR) during normal operations for radioactivity. Upon detecting any radioactivity in the discharge, the discharge is manually terminated and is routed to the floor drain tanks of LWMS.

The EFDS has the following safety-related functions:

1. Preserve containment integrity by the one fail-closed and the one fail-lock air operated containment isolation valves of the EFDS lines penetrating the containment.

2. Preserve flooding level detection capability by means of measuring flooding level in the engineering safety feature (ESF) pump rooms and the floors of Quadrants A, B, C, and D in auxiliary building.

To meet above functional requirements, the EFDS is designed as follows:

1. The functional arrangement of the EFDS is as described in the Design Description of Subsection 2.7.2.5.1 and in Table 2.7.2.5-1 and as shown in Figure 2.7.2.5-1.

2.a The ASME Code components identified in Table 2.7.2.5-2 are designed and constructed in accordance with ASME Section III requirements.

2.b The ASME Code piping, including supports, identified in Table 2.7.2.5-1 is designed and constructed in accordance with ASME Section III requirements.

3.a The seismic Category I components and instruments identified in Tables 2.7.2.5-2 and 2.7.2.5-3, including the supports and anchorages, can withstand seismic design basis loads without loss of safety function.

3.b The seismic Category I piping, including supports, identified in Table 2.7.2.5-1 can withstand seismic design basis load without loss of safety function.

4. Floor drains in the auxiliary building (AB) are physically separated into quadrants (two in each division) and there are no common floor drain lines among quadrants.

5.a The Class 1E components and instruments identified in Tables 2.7.2.5-2 and 2.7.2.5-3 as being qualified for a harsh environment (and the associated wiring, cables, and terminations) can withstand the environmental conditions that would exist before, during, and following a design basis accident without loss of safety function for the time required to perform the safety function.

5.b Each of the Class lE components and instruments identified in Tables 2.7.2.5-2 and 2.7.2.5-3 is powered from its respective Class lE division.

5.c Physical separation and electrical isolation are provided (1) between Class lE divisions, and (2) between Class lE divisions and non-Class 1E divisions.

6.a The EFDS safety-related valves are designed and qualified to perform their safety-related function under the full range of fluid flow, differential pressure, electrical, and temperature conditions up to and including design basis accident conditions.

6.b After loss of motive power, MOV and AOV identified in Table 2.7.2.5-2 assume the indicated loss of motive power position.

7.a Controls exist in the MCR to open and close the MOV and AOV identified in Table 2.7.2.5-2.

7.b Controls exist in the RSR to open and close the MOV and AOV identified in Table 2.7.2.5-2.

7.c Displays and alarms exist and are retrievable in the MCR as defined in Table 2.7.2.5-3.

7.d Displays and alarms exist and are retrievable in the RSR defined in Table 2.7.2.5-3.

8. Leak detection design for the tank house sump for holdup tank, BAST, and RMWT provides an alarm in MCR of liquid detection.

9. The EFDS non-metallic parts, materials, and lubricants used in safety-related mechanical equipment perform their safety-related function up to the end of their qualified life in the design basis harsh environmental conditions (both internal service conditions and external environmental conditions) experienced during normal operations, anticipated operational occurrences, design-basis accidents, and post accident conditions.

2.7.2.5.2 Inspections, Tests, Analyses, and Acceptance Criteria

The inspections, tests, analyses, and associated acceptance criteria for the equipment and floor drainage system specified in Table 2.7.2.5-4.

The ITAAC associated with the EFDS components and piping that comprise a portion of the containment isolation system are described in Table 2.11.3-2.

Table 2.7.2.5-1

Equipment and Floor Drainage System Equipment Piping Location/Characteristics

Equipment and Piping Name	Location	ASME Section III Class	Seismic Category
Portion of containment penetration piping including inside containment isolation valve	Reactor Containment Building	2	I
Portion of containment penetration piping including outside containment isolation valve	Auxiliary Building	2	I

Table 2.7.2.5-2

Equipment and Floor Drainage System Components List

Component Name	Item No.	Location	ASME Section III Class	Seismic Category	Class 1E/ Harsh Envir. Qual.	Control/ Display at MCR	Control/ Display at RSR	Control Signal	Active Safety Function	Loss of Motive Power Position
Containment Isolation Valve (MOV)	V-0005	Reactor Containment Building	2	I	Yes/Yes	Yes/Yes	Yes/Yes	CIAS/ Remote Manual	Close	As Is
Containment Isolation Valve (AOV)	V-0006	Auxiliary Building	2	I	Yes/Yes	Yes/Yes	Yes/Yes	CIAS/ Remote Manual	Close	Close

Table 2.7.2.5-3

Equipment and Floor Drainage System Instruments List

Instrument Name	Item No.	Location	ASME Section III Class	Seismic Category	Class 1E/ Harsh Envir. Qual.	Display/ Alarm at MCR	Display/ Alarm at RSR
Auxiliary Building Floor Drain Sump Room Flooding Level (Quadrant A,B,C & D)	LI-050A, 051B, LI-052C, 053D	Auxiliary Building	3	I	Yes/Yes	Yes/No	Yes/No
Auxiliary Building Floor Drain Sump Room Flooding Alarm (Quadrant A,B,C & D)	LAHH-050A, 051B, 052C, 053D	Auxiliary Building	3	I	Yes/Yes	No/Yes	No/Yes
ESF Pump Room Flooding Alarm	LAHH-079A, 080B, 085A, 086B, 091C, 092D, 097C, 098D	Auxiliary Building	3	I	Yes/Yes	No/Yes	No/Yes

Table 2.7.2.5-4 (1 of 6)

Equipment and Floor Drainage System ITAAC

Design Commitment	Inspections, Tests, Analyses	Acceptance Criteria
1. The functional arrangement of the EFDS is as described in the Design Description of Subsection 2.7.2.5.1 and in Table 2.7.2.5-1 and as shown in Figure 2.7.2.5-1.	1. Inspection of the as-built EFDS will be performed.	1. The as- built EFDS conforms with the functional arrangement as described in the Design Description of Subsection 2.7.2.5.1 and as shown in Figure 2.7.2.5-1 and in Table 2.7.2.5-1.
2.a The ASME Code components identified in Table 2.7.2.5-2 are designed and constructed in accordance with ASME Section III requirements.	2.a Inspection of the as-built ASME Code components identified in Table 2.7.2.5-2 will be performed and documented in ASME data report(s).	2.a The ASME Section III data report(s) exist and conclude that as-built ASME Code components identified in Table 2.7.2.5-2 are designed and constructed in accordance with ASME Section III requirements.
2.b The ASME Code piping, including supports, identified in Table 2.7.2.5-1 is designed and constructed in accordance with ASME Section III requirements.	2.b Inspection of the as-built ASME Code piping, including supports, identified in Table 2.7.2.5-1 will be performed and documented in ASME data report(s).	2.b The ASME Section III data report(s) exist and conclude that as-built ASME Code piping, including supports, identified in Table 2.7.2.5-1 are designed and constructed in accordance with ASME Section III requirements.
3.a The seismic Category I components and instruments identified in Tables 2.7.2.5-2 and 2.7.2.5-3, including the supports and anchorages, can withstand seismic design basis loads without loss of safety function.	3.a.i Inspections will be performed to verify that the as-built seismic Category I components and instruments are located in the seismic Category I structure.	3.a.i The as-built seismic Category I components and instruments identified in Tables 2.7.2.5-2 and 2.7.2.5-3 are located in the seismic Category I structure.
	3.a.ii Type tests, analyses or a combination of type tests and analyses of seismic Category I components and instruments will be performed.	3.a.ii A report exists and concludes that the seismic Category I components and instruments identified in Tables 2.7.2.5-2 and 2.7.2.5-3 can withstand seismic design basis loads without loss of safety function.

Table 2.7.2.5-4 (2 of 6)

Design Commitment	Inspections, Tests, Analyses	Acceptance Criteria
3.a (cont.)	3.a.iii Inspections will be performed to verify that the as-built seismic Category I components and instruments, including the supports and anchorages, are seismically bounded by the tested or analyzed conditions.	3.a.iii A report exists and concludes that the as-built seismic Category I components and instruments identified in Tables 2.7.2.5-2 and 2.7.2.5-3, including the supports and anchorages, are seismically bounded by the tested or analyzed conditions.
3.b The seismic Category I piping, including supports, identified in Table 2.7.2.5-1 can withstand seismic design basis loads without loss of safety function.	3.b.i Inspections will be performed to verify that the as-built seismic Category I piping, including supports, is located in the seismic Category I structure(s).	3.b.i The as-built seismic Category I piping, including supports, identified in Table 2.7.2.5-1 is located in the seismic Category I structure(s).
	3.b.ii Inspections and analyses of the as-built seismic Category I piping, including supports, will be performed.	3.b.ii A report exists and concludes that the as-built seismic Category I piping, including supports, identified in Table 2.7.2.5-1 can withstand seismic design basis loads without loss of its safety function.
4. Floor drains in the auxiliary building (AB) are physically separated into quadrants (two in each division) and there are no common floor drain lines among quadrants.	4. Inspection of the EFDS will be performed.	4. A report exists and concludes that the floor drains in the auxiliary building (AB) are physically separated into quadrants by walls and have no common drain lines among quadrants.

Table 2.7.2.5-4 (3 of 6)

Design Commitment	Inspections, Tests, Analyses	Acceptance Criteria
5.a The Class 1E components and instruments identified in Tables 2.7.2.5-2 and 2.7.2.5-3 as being qualified for a harsh environment (and the associated wiring, cables, and terminations) can withstand the environmental conditions that would exist before, during, and following a design basis accident without loss of safety function for the time required to perform the safety function.	5.a.i Type tests or a combination of type tests and analyses will be performed on Class 1E components and instruments located in a harsh environment.	5.a.i A report exists and concludes that the Class 1E components and instruments identified in Tables 2.7.2.5-2 and 2.7.2.5-3 as being qualified for a harsh environment can withstand the environmental conditions that would exist before, during, and following a design basis accident without loss of safety function for the time required to perform the safety function.
	5.a.ii Inspections will be performed on the as-built Class 1E components and instruments (and the associated wiring, cables, and terminations) located in a harsh environment.	5.a.ii A report exists and concludes that the as-built Class 1E components and instruments identified in Tables 2.7.2.5-2 and 2.7.2.5-3 as being qualified for a harsh environment (and the associated wiring, cables, and terminations) are bounded by type tests or a combination of type tests and analyses.
5.b Each of the Class 1E components and instruments identified in Tables 2.7.2.5-2 and 2.7.2.5-3 is powered from its respective Class 1E division.	5.b Test will be performed by providing a test signal in only one Class 1E division at a time.	5.b The test signal exists at the Class 1E components and instruments identified in Tables 2.7.2.5-2 and 2.7.2.5-3 as being powered from the Class 1E division under test.

Table 2.7.2.5-4 (4 of 6)

Design Commitment	Inspections, Tests, Analyses	Acceptance Criteria
5.c Physical separation and electrical isolation are provided (1) between Class 1E divisions, and (2) between Class 1E divisions and non-Class 1E divisions.	5.c Inspection of the as-built Class 1E divisions will be performed.	5.c Physical separation and electrical isolation exist in accordance with NRC RG 1.75 (1) between Class 1E divisions, and (2) between Class 1E divisions and non-Class 1E divisions.
6.a The EFDS safety-related valves are functionally designed and qualified to perform their safety-related function under the full range of fluid flow, differential pressure, electrical, and temperature conditions up to and including design basis accident conditions.	6.a.i A type test or a combination of type test and analysis will be performed of the EFDS safety-related valves.	6.a.i A Functional Qualification Report performed in conformance to ASME QME-1-2007, as accepted in Regulatory Guide 1.100 Revision 3, exists and concludes that the EFDS safety-related valves listed in Table 2.7.2.5-2 are functionally designed and qualified to perform their safety-related function under the full range of fluid flow, differential pressure, electrical, and temperature conditions up to and including design basis accident conditions.
	6.a.ii A diagnostic stroke test and analysis will be performed of the EFDS safety-related valves under preoperational temperature, differential pressure, and flow conditions.	6.a.ii Each EFDS safety-related valve listed in Table 2.7.2.5-2 strokes fully open and fully closed by remote operation (or manual operation if a manually operated valve) under preoperational temperature, differential pressure, and flow conditions. Analysis based on sufficient diagnostic data demonstrates that the valves will perform at their design-basis capability as established by the type test performed in accordance with 6.a.i.

Table 2.7.2.5-4 (5 of 6)

Design Commitment		Inspections, Tests, Analyses		Acceptance Criteria	
6.b	After loss of motive power, MOV and AOV identified in Table 2.7.2.5-2 assume the indicated loss of motive power position.	6.b	Test of the as-built MOV and AOV will be performed under the conditions of loss of motive power.	6.b	Upon loss of motive power, each as-built MOV or AOV identified in Table 2.7.2.5-2 assumes the indicated loss of motive power position.
7.a	Controls exist in the MCR to open and close the MOV and AOV identified in Table 2.7.2.5-2.	7.a	Tests will be performed using the controls in the MCR to open and close the MOV and AOV.	7.a	Controls in the as-built MCR open and close the MOV and AOV identified in Table 2.7.2.5-2.
7.b	Controls exist in the RSR to open and close the MOV and AOV identified in Table 2.7.2.5-2.	7.b	Tests will be performed using the controls in the RSR to open and close the MOV and AOV.	7.b	Controls in the as-built RSR open and close the MOV and AOV identified in Table 2.7.2.5-2.
7.c	Displays and alarms exist and are retrievable in the MCR as defined in Table 2.7.2.5-3.	7.c	Inspections of the as-built displays and alarms in the MCR will be performed.	7.c	Displays and alarms exist and are retrieved in the MCR as defined in Table 2.7.2.5-3.
7.d	Displays and alarms exist and are retrievable in the RSR as defined in Table 2.7.2.5-3.	7.d	Inspections of the as-built displays and alarms in the RSR will be performed.	7.d	Displays and alarms exist and are retrieved in the RSR as defined in Table 2.7.2.5-3.

Table 2.7.2.5-4 (6 of 6)

Design Commitment	Inspections, Tests, Analyses	Acceptance Criteria
8. Leak detection design for the tank house sump for holdup tank, BAST, and RMWT provides an alarm in MCR of liquid detection.	8. Inspection of the as-built leak detection system and signal test is conducted to verify the alarm in the MCR.	8. The as-built leak detection instrumentation is installed as designed; and the alarm is verified in the MCR.
9. The EFDS non-metallic parts, materials, and lubricants used in safety-related mechanical equipment perform their safety-related function up to the end of their qualified life in the design basis harsh environmental conditions (both internal service conditions and external environmental conditions) experienced during normal operations, anticipated operational occurrences, design-basis accidents, and post accident conditions.	9. A type test or a combination of type test and analysis will be performed of the EFDS non-metallic parts, materials, and lubricants used in safety-related mechanical equipment.	9. A report exists and concludes that the non-metallic parts, materials, and lubricants used in safety-related mechanical equipment listed in Table 2.7.2.5-2 perform their safety-related function up to the end of their qualified life under the design basis harsh environmental conditions (both internal service conditions and external environmental conditions) experienced during normal operations, anticipated operational occurrences, design-basis accidents, and post accident conditions.

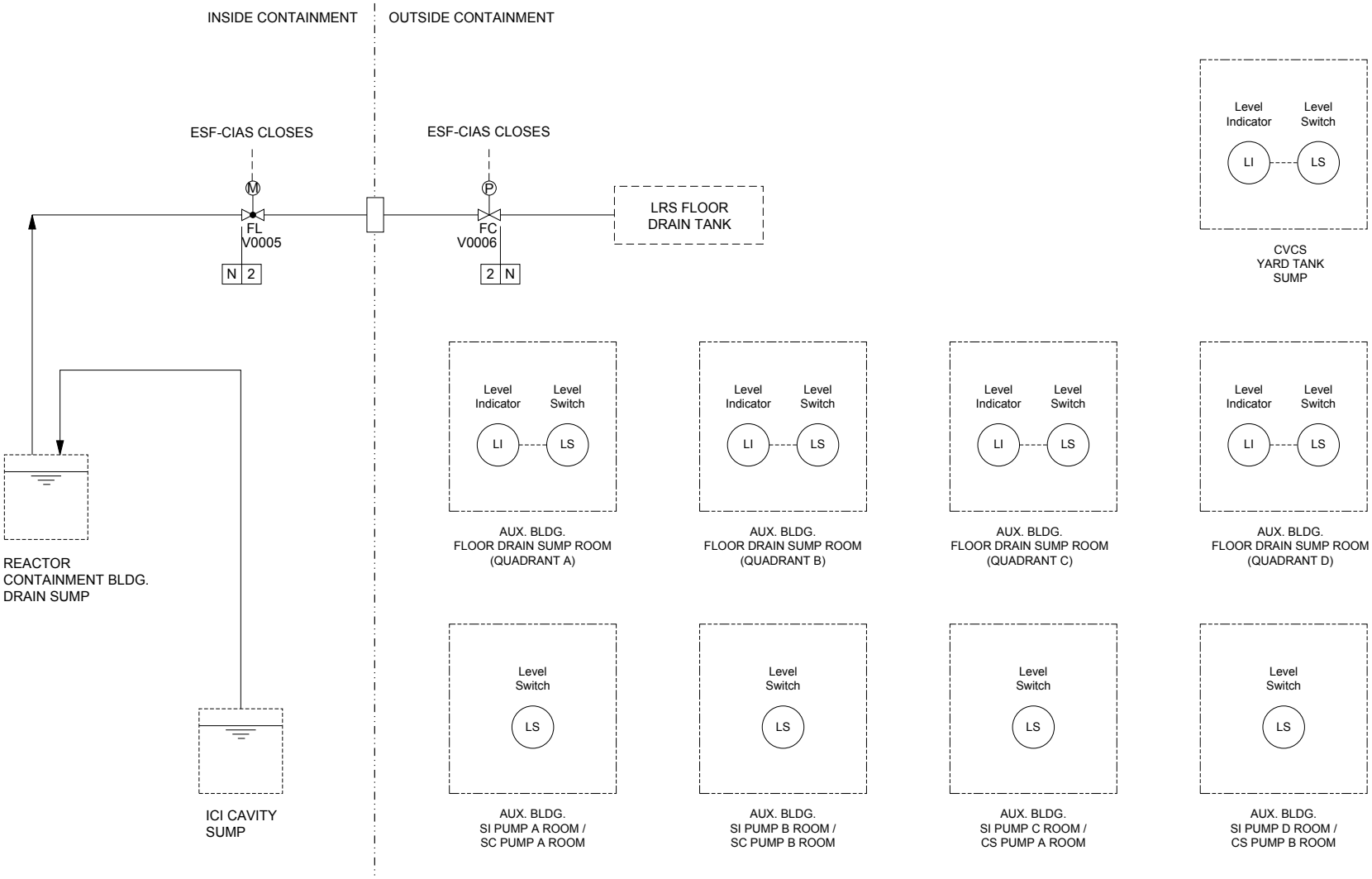

Figure 2.7.2.5-1 Equipment and Floor Drainage System

2.7.2.6 Process and Post-Accident Sampling System

2.7.2.6.1 Design Description

The process and post-accident sampling system (PPASS) is designed to collect samples of the various process fluids (liquid and gaseous) during normal and post-accident conditions and monitor various conditions using the collected and analyzed samples.

The PPASS does not have any safety function, and therefore has no safety design basis, except for providing containment isolation. The containment isolation function of PPASS is described in Subsection 2.11.3.

1. The functional arrangement of the PPASS is as described in the Design Description of Subsection 2.7.2.6.1 and in Table 2.7.2.6-1 and as shown in Figure 2.7.2.6-1.

2.a The ASME Code components identified in Table 2.7.2.6-2 are designed and constructed in accordance with ASME Section III requirements.

2.b The ASME Code piping, including supports, identified in Table 2.7.2.6-1 is designed and constructed in accordance with ASME Section III requirements.

3.a Pressure boundary welds in ASME Code components identified in Table 2.7.2.6-2 meet ASME Section III requirements.

3.b Pressure boundary welds in ASME Code piping identified in Table 2.7.2.6-1 meet ASME Section III requirements.

4.a The ASME Code components identified in Table 2.7.2.6-2 retain their pressure boundary integrity at their design pressure.

4.b The ASME Code piping identified in Table 2.7.2.6-1 retains its pressure boundary integrity at its design pressures.

5.a The seismic Category I components and instruments identified in Tables 2.7.2.6-2 and 2.7.2.6-3, including the supports and anchorages, withstand seismic design basis loads without loss of safety function.

5.b The seismic Category I piping, including supports, identified in Table 2.7.2.6-1 withstands seismic design basis loads without loss of safety function.

6.a The Class 1E components and instruments identified in Tables 2.7.2.6-2 and 2.7.2.6-3 as being qualified for a harsh environment (and the associated wiring, cables, and terminations) withstand the environmental conditions that would exist before, during, and following a design basis accident without loss of safety function for the time required to perform the safety function.

6.b Each of the Class 1E components and instruments identified in Tables 2.7.2.6-2 and 2.7.2.6-3 is powered from its respective Class 1E division.

6.c Physical separation and electrical isolation are provided (1) between Class 1E divisions, and (2) between Class 1E divisions and non-Class 1E divisions.

7.a The PPASS safety-related valves are designed and qualified to perform their safety-related function under the full range of fluid flow, differential pressure, electrical, and temperature conditions up to and including design basis accident conditions.

7.b After loss of motive power, MOVs and SOVs identified in Table 2.7.2.6-2 assume the indicated loss of motive power position.

8.a Controls exist in the MCR to open and close the MOVs and SOVs identified in Table 2.7.2.6-2.

8.b Controls exist in the RSR to open and close the MOVs and SOVs identified in Table 2.7.2.6-2.

8.c Displays and alarms exist and are retrievable in the MCR as defined in Tables 2.7.2.6-2 and 2.7.2.6-3.

8.d Displays and alarms exist and are retrievable in the RSR as defined in Tables 2.7.2.6-2 and 2.7.2.6-3.

9. The PPASS non-metallic parts, materials, and lubricants used in safety-related mechanical equipment perform their safety-related function up to the end of their qualified life in the design basis harsh environmental conditions (both internal service conditions and external environmental conditions) experienced during

normal operations, anticipated operational occurrences, design-basis accidents, and post accident conditions.

2.7.2.6.2 Inspections, Tests, Analyses, and Acceptance Criteria

The inspection, tests, analyses, and associated acceptance criteria for the PPASS are specified in Table 2.7.2.6-4.

The ITAAC related to the CIVs and the piping between the CIVs of the PPASS are described in Table 2.11.3-2.

Table 2.7.2.6-1

Process and Post-Accident Sampling System Equipment and Piping Location/Characteristics

Equipment and Piping Name	Location	ASME Section III Class	Seismic Category
RCS Hot Leg Sample Line CIV inside Containment	Containment	2	I
RCS Hot Leg Sample Line CIV outside Containment	Auxiliary Building	2	I
RCS PZR Surge Sample Line CIV inside Containment	Containment	2	I
RCS PZR Surge Sample Line CIV outside Containment	Auxiliary Building	2	I
RCS PZR Steam Space Sample Line CIV inside Containment	Containment	2	I
RCS PZR Steam Space Sample Line CIV outside Containment	Auxiliary Building	2	I
SI Pumps Miniflow Sample Line Isolation Valves	Auxiliary Building	2	I
CS Pump Miniflow Sample Line Isolation Valves	Auxiliary Building	2	I
SC Pump Miniflow Sample Line Isolation Valves	Auxiliary Building	2	I
SI Tank Sample Line CIV inside Containment	Containment	2	I
SI Tank Sample Line CIV outside Containment	Auxiliary Building	2	I
SI Tank Sample Line Isolation Valves	Containment	2	I
Containment Air Sample Line CIV inside Containment	Containment	2	I
Containment Air Sample Line CIV outside Containment	Auxiliary Building	2	I
Containment Air Sample Return Line CIV outside Containment	Auxiliary Building	2	I
Containment Air Sample Return Line CIV inside Containment	Containment	2	I
PASS Sample Return Line CIV inside Containment	Containment	2	I
PASS Sample Return Line CIV outside Containment	Auxiliary Building	2	I

Table 2.7.2.6-2 (1 of 2)

Process and Post-Accident Sampling System Components List

Component Name	Item No.	ASME Section III Class	Seismic Category	Class 1E/ Harsh Envir. Qual.	Control/ Display at MCR	Control/ Display at RSR	Control Signal	Active Safety Function	Loss of Motive Power Position
RCS Hot Leg Sample Line CIV inside Containment (SOV)	PX-001	2	I	Yes/Yes	Yes/Yes	Yes/Yes	CIAS	Closed	Closed
RCS Hot Leg Sample Line CIV outside Containment (SOV)	PX-002	2	I	Yes/Yes	Yes/Yes	Yes/Yes	CIAS	Closed	Closed
RCS PZR Surge Sample Line CIV inside Containment (SOV)	PX-003	2	I	Yes/Yes	Yes/Yes	Yes/Yes	CIAS	Closed	Closed
RCS PZR Surge Sample Line CIV outside Containment (SOV)	PX-004	2	I	Yes/Yes	Yes/Yes	Yes/Yes	CIAS	Closed	Closed
RCS PZR Steam Space Sample Line CIV inside Containment (SOV)	PX-005	2	I	Yes/Yes	Yes/Yes	Yes/Yes	CIAS	Closed	Closed
RCS PZR Steam Space Sample Line CIV outside Containment (SOV)	PX-006	2	I	Yes/Yes	Yes/Yes	Yes/Yes	CIAS	Closed	Closed
SI Tank Sample Line CIV outside Containment (SOV)	PX-020	2	I	Yes/Yes	Yes/Yes	Yes/Yes	CIAS	Closed	Closed
SI Tank Sample Line CIV inside Containment (SOV)	PX-021	2	I	Yes/Yes	Yes/Yes	Yes/Yes	CIAS	Closed	Closed

Table 2.7.2.6-2 (2 of 2)

Component Name	Item No.	ASME Section III Class	Seismic Category	Class 1E/ Harsh Envir. Qual.	Control/ Display at MCR	Control/ Display at RSR	Control Signal	Active Safety Function	Loss of Motive Power Position
Containment Air Sample Line CIV inside Containment (MOV)	PX-041	2	I	Yes/Yes	Yes/Yes	Yes/Yes	CIAS	Closed	As Is
Containment Air Sample Line CIV outside Containment (MOV)	PX-042	2	I	Yes/Yes	Yes/Yes	Yes/Yes	CIAS	Closed	As Is
Containment Air Sample Return Line CIV outside Containment (MOV)	PX-043	2	I	Yes/Yes	Yes/Yes	Yes/Yes	CIAS	Closed	As Is
PASS Sample Return Line CIV outside Containment (SOV)	PX-053	2	I	Yes/Yes	Yes/Yes	Yes/Yes	CIAS	Closed	Closed
PASS Sample Return Line CIV inside Containment	PX-1005	2	I	-/Yes	-	-	-	Open/Closed	-/-
Containment Air Sample Return Line CIV inside Containment	PX-1020	2	I	-/Yes	-	-	-	Open/Closed	-/-

(1) Dash(-) indicates not applicable.

Table 2.7.2.6-3

Process and Post-Accident Sampling System Instruments List

Instrument Name	Item No.	Location	ASME Section III Class	Seismic Category	Class 1E/ Harsh Envir. Qual.	Display/ Alarm at MCR	Display/ Alarm at RSR
RCS Hot Leg Sample Line CIVs Position	PX-V001	Containment	-	II	No/No	Yes/No	Yes/No
RCS Hot Leg Sample Line CIVs Position	PX-V002	Auxiliary Building	-	II	No/No	Yes/No	Yes/No
RCS PZR Surge Sample Line CIVs Position	PX-V003	Containment	-	II	No/No	Yes/No	Yes/No
RCS PZR Surge Sample Line CIVs Position	PX-V004	Auxiliary Building	-	II	No/No	Yes/No	Yes/No
RCS PZR Steam Space Sample Line CIVs Position	PX-V005	Containment	-	II	No/No	Yes/No	Yes/No
RCS PZR Steam Space Sample Line CIVs Position	PX-V006	Auxiliary Building	-	II	No/No	Yes/No	Yes/No
SI Tank Sample Line CIVs Position	PX-V020	Auxiliary Building	-	II	No/No	Yes/No	Yes/No
SI Tank Sample Line CIVs Position	PX-V021	Containment	-	II	No/No	Yes/No	Yes/No
Containment Air Sample Line CIVs Position	PX-V041	Containment	-	II	No/No	Yes/No	Yes/No
Containment Air Sample Line CIVs Position	PX-V042	Auxiliary Building	-	II	No/No	Yes/No	Yes/No
Containment Air Sample Return Line CIV Position	PX-V043	Auxiliary Building	-	II	No/No	Yes/No	Yes/No
PASS Air Sample Return Line CIV Position	PX-V053	Auxiliary Building	-	II	No/No	Yes/No	Yes/No

(1) Dash(-) indicates not applicable.

Table 2.7.2.6-4 (1 of 6)

Process and Post-Accident Sampling System ITAAC

Design Commitment	Inspections, Tests, Analyses	Acceptance Criteria
1. The functional arrangement of the PPASS is as described in the Design Description of Subsection 2.7.2.6.1 and in Table 2.7.2.6-1 and as shown in Figure 2.7.2.6-1.	1. Inspection of the as-built system will be performed.	1. The as-built PPASS conforms with the functional arrangement as described in the Design Description of Subsection 2.7.2.6.1 and in Table 2.7.2.6-1 and as shown in Figure 2.7.2.6-1.
2.a The ASME Code components identified in Table 2.7.2.6-2 are designed and constructed in accordance with ASME Section III requirements.	2.a Inspection of the as-built ASME Code components identified in Table 2.7.2.6-2 will be performed and documented in the ASME data report(s).	2.a The ASME Section III data report(s) exist and conclude that the as-built ASME Code components identified in Table 2.7.2.6-2 are designed and constructed in accordance with ASME Section III requirements.
2.b The ASME Code piping, including supports, identified in Table 2.7.2.6-1 is designed and constructed in accordance with ASME Section III requirements.	2.b Inspection of the as-built ASME Code piping, including supports, identified in Table 2.7.2.6-1 will be performed and documented in the ASME data report(s).	2.b The ASME Section III data report(s) exist and conclude that the as-built ASME Code piping, including supports, identified in Table 2.7.2.6-1 is designed and constructed in accordance with ASME Section III requirements.
3.a Pressure boundary welds in ASME Code components identified in Table 2.7.2.6-2 meet ASME Section III requirements.	3.a Inspections of the as-built pressure boundary welds in ASME Code components identified in Table 2.7.2.6-2 will be performed in accordance with the ASME Section III.	3.a A report exists and concludes that the ASME Section III requirements are met for non-destructive examination of the as-built pressure boundary welds in ASME Code components identified in Table 2.7.2.6-2.
3.b Pressure boundary welds in ASME Code piping identified in Table 2.7.2.6-1 meet ASME Section III requirements.	3.b Inspections of the as-built pressure boundary welds in ASME Code piping identified in Table 2.7.2.6-1 will be performed in accordance with the ASME Section III.	3.b A report exists and concludes that the ASME Section III requirements are met for non-destructive examination of the as-built pressure boundary welds in ASME Code piping identified in Table 2.7.2.6-1.

Table 2.7.2.6-4 (2 of 6)

Design Commitment	Inspections, Tests, Analyses	Acceptance Criteria
4.a The ASME Code components identified in Table 2.7.2.6-2 retain their pressure boundary integrity at their design pressure.	4.a A hydrostatic test will be conducted on the as-built ASME Code components identified in Table 2.7.2.6-2 required to be hydrostatically tested by the ASME Section III.	4.a A report exists and concludes that the results of the hydrostatic test of the as-built ASME Code components identified in Table 2.7.2.6-2 conform with ASME Section III requirements.
4.b The ASME Code piping identified in Table 2.7.2.6-1 retains its pressure boundary integrity at its design pressures.	4.b A hydrostatic test will be conducted on the as-built ASME Code piping identified in Table 2.7.2.6-1 required to be hydrostatically tested by the ASME Section III.	4.b A report exists and concludes that the results of the hydrostatic test of the as-built ASME Code piping identified in Table 2.7.2.6-1 conform with ASME Section III requirements.
5.a The seismic Category I components and instruments identified in Tables 2.7.2.6-2 and 2.7.2.6-3, including the supports and anchorages, can withstand seismic design basis loads without loss of safety function.	5.a.i Inspections will be performed to verify that the as-built seismic Category I components and instruments are located in a seismic Category I structure(s).	5.a.i The as-built seismic Category I components and instruments identified in Tables 2.7.2.6-2 and 2.7.2.6-3 is located in a seismic Category I structure(s).
	5.a.ii Type tests, analyses or a combination of type tests and analyses of seismic Category I components and instruments will be performed.	5.a.ii A report exists and concludes that the seismic Category I components and instruments identified in Tables 2.7.2.6-2 and 2.7.2.6-3 withstand seismic design basis loads without loss of safety function.
	5.a.iii Inspections will be performed to verify that the as-built seismic Category I components and instruments, including the supports and anchorages, are seismically bounded by the tested or analyzed conditions.	5.a.iii A report exists and concludes that the as-built seismic Category I components and instruments identified in Tables 2.7.2.6-2 and 2.7.2.6-3, including the supports and anchorages, are seismically bounded by the tested or analyzed conditions.

Table 2.7.2.6-4 (3 of 6)

Design Commitment	Inspections, Tests, Analyses	Acceptance Criteria
5.b The seismic Category I piping, including supports, identified in Table 2.7.2.6-1 withstands seismic design basis loads without loss of safety function.	5.b.i Inspections will be performed to verify that the as-built seismic Category I piping, including supports, is located in the seismic Category I structure(s).	5.b.i The as-built seismic Category I piping, including supports, identified in Table 2.7.2.6-1 is located in the seismic Category I structure(s).
	5.b.ii Inspections and analyses of the as-built seismic Category I piping, including supports, will be performed.	5.b.ii A report exists and concludes that the as-built seismic Category I piping, including supports, identified in Table 2.7.2.6-1 withstands seismic design basis loads without loss of safety function.
6.a The Class 1E components and instruments identified in Tables 2.7.2.6-2 and 2.7.2.6-3 as being qualified for a harsh environment (and the associated wiring, cables, and terminations) withstand the environmental conditions that would exist before, during, and following a design basis accident without loss of safety function for the time required to perform the safety function.	6.a.i Type tests or a combination of type tests and analyses will be performed on Class 1E components and instruments located in a harsh environment.	6.a.i A report exists and concludes that the Class 1E components and instruments identified in Tables 2.7.2.6-2 and 2.7.2.6-3 as being qualified for a harsh environment withstand the environmental conditions that would exist before, during, and following a design basis accident without loss of safety function for the time required to perform the safety function.
	6.a.ii Inspection will be performed on the as-built Class 1E components and instruments (and the associated wiring, cables, and terminations) located in a harsh environment.	6.a.ii A report exists and concludes that the as-built Class 1E components and instruments identified in Tables 2.7.2.6-2 and 2.7.2.6-3 as being qualified for a harsh environment (and the associated wiring, cables, and terminations) are bounded by type tests or a combination of type tests and analyses.

Table 2.7.2.6-4 (4 of 6)

Design Commitment	Inspections, Tests, Analyses	Acceptance Criteria
6.b Each of the Class 1E components and instruments identified in Tables 2.7.2.6-2 and 2.7.2.6-3 is powered from its respective Class 1E division.	6.b Tests will be performed by providing a test signal in only one Class 1E division at a time.	6.b The test signal exists at the Class 1E components and instruments identified in Tables 2.7.2.6-2 and 2.7.2.6-3 as being powered from the Class 1E division under test.
6.c Physical separation and electrical isolation are provided (1) between Class 1E divisions, and (2) between Class 1E divisions and non-Class 1E divisions.	6.c Inspections of the as-built Class 1E divisions will be performed.	6.c Physical separation and electrical isolation exist in accordance with NRC RG 1.75 (1) between Class 1E divisions, and (2) between Class 1E divisions and non-Class 1E divisions.
7.a The PPASS safety-related valves are functionally designed and qualified to perform their safety-related function under the full range of fluid flow, differential pressure, electrical, and temperature conditions up to and including design basis accident conditions.	7.a.i A type test or a combination of type test and analysis will be performed of the PPASS safety-related valves.	7.a.i A Functional Qualification Report performed in conformance to ASME QME-1-2007, as accepted in Regulatory Guide 1.100 Revision 3, exists and concludes that the PPASS safety-related valves listed in Table 2.7.2.6-2 are functionally designed and qualified to their safety-related function under the full range of fluid flow, differential pressure, electrical, and temperature conditions up to and including design basis accident conditions.

Table 2.7.2.6-4 (5 of 6)

Design Commitment	Inspections, Tests, Analyses	Acceptance Criteria
7.a (cont.)	7.a.ii A diagnostic stroke test and analysis will be performed of the PPASS safety-related valves under preoperational temperature, differential pressure, and flow conditions.	7.a.ii Each PPASS safety-related valve listed in Table 2.7.2.6-2 strokes fully open and fully closed by remote operation (or manual operation if a manually operated valve) under preoperational temperature, differential pressure, and flow conditions. Analysis based on sufficient diagnostic data demonstrates that the valves will perform at their design basis capability as established by the type test performed in accordance with 7.a.i.
	7.a.iii Tests of the as-built check valves will be performed under pre-operational test pressure, temperature, and fluid flow conditions.	7.a.iii Each check valve changes position as indicated in Table 2.7.2.6-2 under pre-operational test pressure, temperature, and fluid flow conditions.
7.b After loss of motive power, MOVs and SOVs identified in Table 2.7.2.6-2 assume the indicated loss of motive power position.	7.b Tests of the as-built MOVs and SOVs will be performed under the conditions of loss of motive power.	7.b Upon loss of motive power, each as-built MOV or SOV identified in Table 2.7.2.6-2 assumes the indicated loss of motive power position.
8.a Controls exist in the MCR to open and close the MOVs and SOVs identified in Table 2.7.2.6-2.	8.a Tests will be performed using the controls in the MCR to open and close the MOVs and SOVs.	8.a Controls in the as-built MCR open and close the MOVs and SOVs identified in Table 2.7.2.6-2.
8.b Controls exist in the RSR to open and close the MOVs and SOVs identified in Table 2.7.2.6-2.	8.b Tests will be performed using the controls in the RSR to open and close the MOVs and SOVs.	8.b Controls in the as-built RSR open and close the MOVs and SOVs identified in Table 2.7.2.6-2.

Table 2.7.2.6-4 (6 of 6)

Design Commitment	Inspections, Tests, Analyses	Acceptance Criteria
8.c Displays and alarms exist and are retrievable in the MCR as defined in Tables 2.7.2.6-2 and 2.7.2.6-3.	8.c Inspections of the as-built displays and alarms in the MCR will be performed.	8.c Displays and alarms exist and are retrieved in the as-built MCR as defined in Tables 2.7.2.6-2 and 2.7.2.6-3.
8.d Displays and alarms exist and are retrievable in the RSR as defined in Tables 2.7.2.6-2 and 2.7.2.6-3.	8.d Inspections of the as-built displays and alarms in the RSR will be performed.	8.d Displays and alarms exist and are retrieved in the as-built RSR as defined in Tables 2.7.2.6-2 and 2.7.2.6-3.
9. The PPASS non-metallic parts, materials, and lubricants used in safety-related mechanical equipment perform their safety-related function up to the end of their qualified life in the design basis harsh environmental conditions (both internal service conditions and external environmental conditions) experienced during normal operations, anticipated operational occurrences, design-basis accidents, and post accident conditions.	9. A type test or a combination of type test and analysis will be performed of the PPASS non-metallic parts, materials, and lubricants used in safety-related mechanical equipment.	9. A report exists and concludes that the non-metallic parts, materials, and lubricants used in safety-related mechanical equipment listed in Table 2.7.2.6-2 perform their safety-related function up to the end of their qualified life under the design basis harsh environmental conditions (both internal service conditions and external environmental conditions) experienced during normal operations, anticipated operational occurrences, design-basis accidents, and post accident conditions.

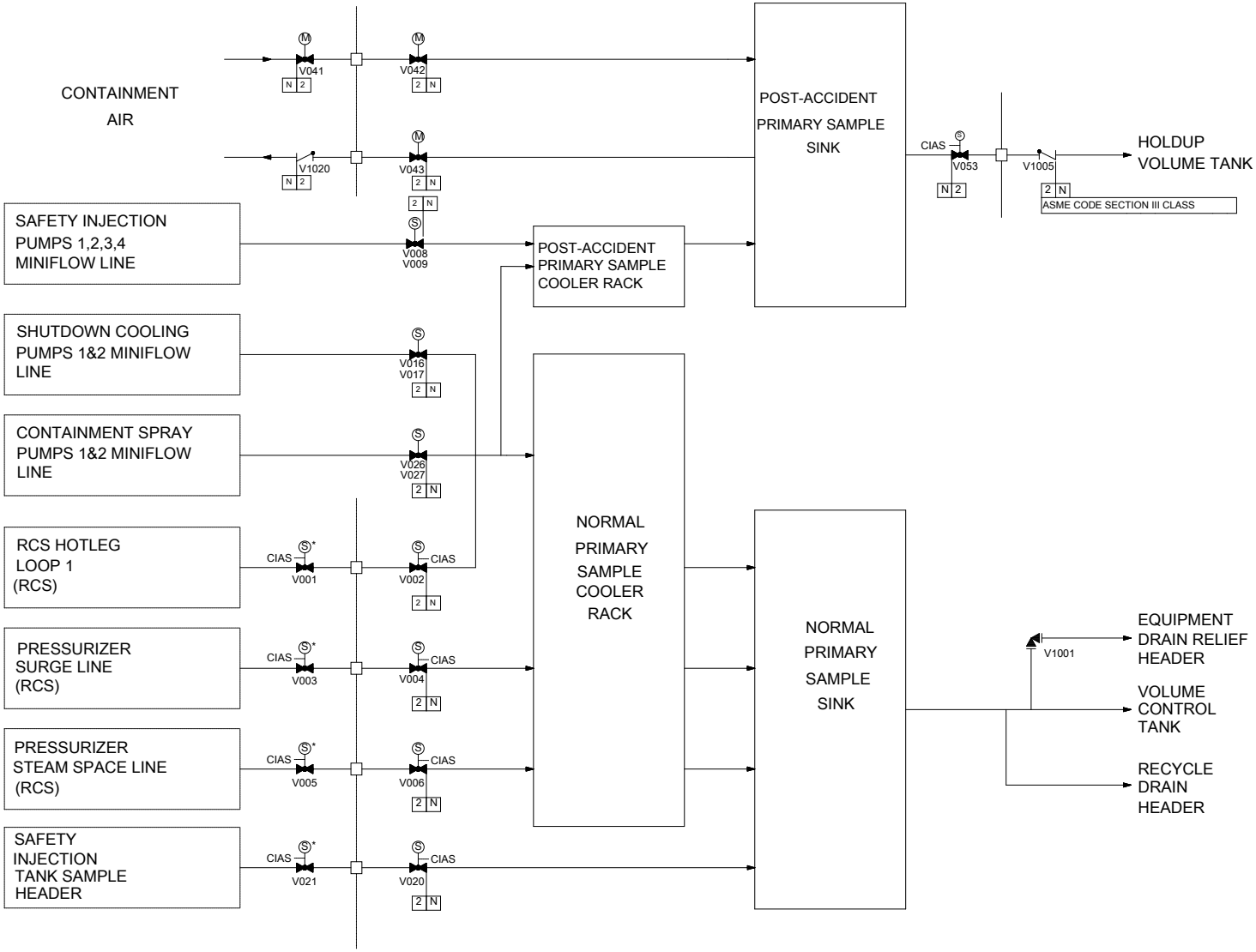

Figure 2.7.2.6-1 Process and Post-accident Sampling System

2.7.2.7 Turbine Generator Building Closed Cooling Water System

No entry for this system.

2.7.2.8 Turbine Generator Building Open Cooling Water System

No entry for this system.

2.7.3 HVAC Systems

2.7.3.1 Control Room HVAC System

2.7.3.1.1 Design Description

The control room HVAC system is a safety-related except a kitchen and toilet exhaust fan and a smoke removal fan, and maintains environmental conditions for personnel comfort, health, safety, and proper functions of equipment and controls within the control room envelope (CRE) during normal operations, abnormal and accident conditions of the plant. The control room HVAC system is located in auxiliary building.

The CRE is maintained at a positive pressure with respect to adjacent areas to prevent unfiltered in-leakage.

This system consists of two divisions. Each division has an outside air intake, louver, dampers, two air handling units (AHUs), an air cleaning unit (ACU), ductwork, instrumentation and controls.

Each outside air intake has two redundant isolation dampers, a smoke detector, and two radiation detection monitors.

The control room HVAC system is designed as follows:

1. The functional arrangement of the control room HVAC system is as described in the Design Description of Subsection 2.7.3.1.1 and as shown in Figure 2.7.3.1-1.

2. The seismic Category I components and instruments identified in Tables 2.7.3.1-1 and 2.7.3.1-2, including the supports and anchorages, withstand seismic design basis loads without loss of safety function.

3.a Each of the Class 1E components and instruments identified in Tables 2.7.3.1-1 and 2.7.3.1-2 is powered from its respective Class 1E division.

3.b Physical separation and electrical isolation are provided (1) between Class 1E divisions, and (2) between Class 1E divisions and non-Class 1E divisions.

4.a ESR dampers, PSR dampers, check dampers and tornado dampers identified in Table 2.7.3.1-1 perform an active safety function to change position as indicated in the table.

4.b After loss of motive power, the ESR dampers and PSR dampers identified in Table 2.7.3.1-1 assume the indicated loss of motive power position.

5.a Controls exist in the MCR to start and stop the ACUs and AHUs, and to open and close the ESR dampers and PSR dampers identified in Table 2.7.3.1-1.

5.b Controls exist in the RSR to start and stop the ACUs and AHUs, and to open and close the ESR dampers and PSR dampers identified in Table 2.7.3.1-1.

5.c Displays and alarms exist and are retrievable in the MCR as defined in Tables 2.7.3.1-1 and 2.7.3.1-2.

5.d Displays and alarms exist and are retrievable in the RSR as defined in Tables 2.7.3.1-1 and 2.7.3.1-2.

6. The two mechanical divisions of the control room HVAC system are physically separated.

7. The control room HVAC system provides the conditioned air to maintain the room temperature within the design limits for the CRE (except non-safety-related rooms) during plant normal, abnormal and accident conditions.

8. The control room HVAC system removes particulate matter and iodine, and provides system flow as required in the safety analysis.

9.a The outside air intake isolation dampers in the outside air intake with the higher radiation level close upon receipt of a high radiation signal.

9.b After the outside air intake isolation dampers are initially closed upon receipt of a high radiation signal, the closed outside air intake isolation dampers are automatically reset and reopened, and the outside air intake isolation dampers with the higher radiation level automatically close within a predetermined interval.

10. The control room emergency makeup ACU starts and the ACU inlet isolation damper, the ACU discharge flow control damper, and the ACU return air isolation dampers open upon receipt of ESFAS-SIAS or ESFAS-CREVAS.

11. The unfiltered inleakage is within the performance value limit as specified in the safety analysis.

12. The AHU inlet isolation dampers (PSR) listed in Table 2.7.3.1-1 close within their closure time before the airborne radioactive material passes through the isolation dampers.

13.a The fire dampers are installed in the fire rated barriers and have the same fire resistance rating as the barrier.

13.b The fire dampers which are required to protect safety shutdown capability close under design air flow condition.

13.c HVAC ducts that penetrate fire barriers have fire dampers in the HVAC ducts.

14. HVAC duct is installed and routed within the CRE boundary.

15. The control room HVAC system non-metallic parts, materials, and lubricants used in safety-related mechanical equipment perform their safety-related function up to the end of their qualified life in the design basis harsh environmental conditions (both internal service conditions and external environmental conditions) experienced during normal operations, anticipated operational occurrences, design-basis accidents, and post accident conditions.

2.7.3.1.2 Inspections, Tests, Analyses, and Acceptance Criteria

Table 2.7.3.1-3 specifies the inspections, tests, analyses, and associated acceptance criteria for the control room HVAC system.

Table 2.7.3.1-1 (1 of 2)

Control Room HVAC System Components List

Component Name [1]	Item No.	ASME Section III Class	Seismic Category	Class 1E/ Harsh Envir. Qual.	Control/ Display at MCR	Control/ Display at RSR	Control Signal	Active Safety Function	Loss of Motive Power Position
Supply AHU	VC-HV01A, HV01B, HV01C, HV01D	3[4]	I	Yes/No	Yes/Yes	Yes/Yes	-	Start	-
Emergency Makeup ACU[3]	VC-AU01A, AU01B	-	I	Yes/No	Yes/Yes	Yes/Yes	SIAS or CREVAS	Start	-
Outside Air Intake Isolation Damper (ESR)	VC-Y0011A, Y0011B, Y0012A, Y0012B	-	I	Yes/No	Yes/Yes	Yes/Yes	SIAS or CREVAS	Open	Open
AHU Inlet Isolation Damper (PSR)	VC-Y0013A, Y0013C, Y0014B, Y0014D, Y0015A, Y0015C, Y0016B, Y0016D	-	I	Yes/No	Yes/Yes	Yes/Yes	SIAS or CREVAS	Closed	Closed
AHU Discharge Check Damper	VC-Y1002A, Y1002B, Y1002C, Y1002D	-	I	-/-	-/-	-/-	-	Open	-
ACU Inlet Isolation Damper (ESR)	VC-Y0017A, Y0017C, Y0018B, Y0018D	-	I	Yes/No	Yes/Yes	Yes/Yes	ACU fan start	Open	Closed

Table 2.7.3.1-1 (2 of 2)

Component Name (1)	Item No.	ASME Section III Class	Seismic Category	Class 1E/ Harsh Envir. Qual.	Control/ Display at MCR	Control/ Display at RSR	Control Signal	Active Safety Function	Loss of Motive Power Position
ACU Return Air Isolation Damper (ESR)	VC-Y0019A, Y0019C, Y0020B, Y0020D	-	I	Yes/No	Yes/Yes	Yes/Yes	ACU fan start	Open	Closed
AHU Discharge Flow Control Damper (ESR)	VC-Y0021A, Y0021C, Y0022B, Y0022D	-	I	Yes/No	Yes/Yes	Yes/Yes	AHU fan start	Modulate	Closed
ACU Discharge Flow Control Damper (ESR)	VC-Y0023A, Y0023C, Y0024B, Y0024D	-	I	Yes/No	Yes/Yes	Yes/Yes	ACU fan start	Modulate	Closed
Kitchen and Toilet Exhaust Isolation Damper (PSR)	VC-Y0027, Y0028	-	I	Yes/No	Yes/Yes	Yes/Yes	SIAS or CREVAS	Closed	Closed
Smoke Removal Isolation Damper (PSR)	VC-Y0029, Y0030	-	I	Yes/No	Yes/Yes	Yes/Yes	SIAS or CREVAS	Closed	Closed
Tornado Dampers	VC-Y1101A, Y1101B, Y1102, Y1103	-	I	-/No	-/-	-/-	-	Closed (Tornado Condition) Open (After Tornado Condition)	-

(1) Damper actuator types are as follows:
- ESR : Electro hydraulic spring return
- PSR : Pneumatic spring return

(2) Dash(-) indicates not applicable.

(3) Each ACU has two fans. Two fans in AU01A are powered by Class 1E train A and C, respectively, and two fans in AU01B are powered by Class 1E train B and D, respectively.

(4) The only cooling coil component in the AHU is ASME Section III Class 3 component.

Table 2.7.3.1-2 (1 of 2)

Control Room HVAC System Instruments List

Instrument Name	Item No.	Location	ASME Section III Class	Seismic Category	Class 1E/ Harsh Envir. Qual.	Display/ Alarm at MCR	Display/ Alarm at RSR
AHU cooling coil downstream temperature	T-3048A, 3048C, 3050B, 3050D	Aux. Bldg	-	I	Yes/No	Yes/Yes	Yes/Yes
AHU flow rate	F-021A, 021C, 022B, 022D	Aux. Bldg	-	I	Yes/No	Yes/Yes	Yes/Yes
ACU flow rate	F-053A, 053C, 054B, 054D	Aux. Bldg	-	I	Yes/No	Yes/Yes	Yes/Yes
ACU heating coil downstream temperature	T-029A, 029C, 030B, 030D	Aux. Bldg	-	I	Yes/No	Yes/Yes	Yes/Yes
AHU heating coil downstream temperature	T-3047A, 3047C, 3048B, 3048D	Aux. Bldg	-	I	Yes/No	Yes/Yes	Yes/Yes
Outside air flow rate	F-051C, 052D	Aux. Bldg	-	I	Yes/No	Yes/Yes	Yes/Yes
Outside intake air radiation detection	R-071A, 072B, 073A, 074B	Aux. Bldg	-	I	Yes/No	Yes/Yes	Yes/Yes

Table 2.7.3.1-2 (2 of 2)

Instrument Name	Item No.	Location	ASME Section III Class	Seismic Category	Class 1E/ Harsh Envir. Qual.	Display/ Alarm at MCR	Display/ Alarm at RSR
Outside air intake smoke detection	X-071, 072	Aux. Bldg	-	-	-/-	No/Yes	No/Yes
Supply air duct smoke detection	X-085, 086	Aux. Bldg	-	-	-/-	No/Yes	No/Yes
Return air duct smoke detection	X-087, 088	Aux. Bldg	-	-	-/-	No/Yes	No/Yes

(1) Dash(-) indicates not applicable.

Table 2.7.3.1-3 (1 of 6)

Control Room HVAC System ITAAC

Design Commitment	Inspections, Tests, Analyses	Acceptance Criteria
1. The functional arrangement of the control room HVAC system is as described in the Design Description of Subsection 2.7.3.1.1 and as shown in Figure 2.7.3.1-1.	1. Inspection of the as-built control room HVAC system will be conducted.	1. The as-built control room HVAC system conforms with the functional arrangement as described in the Design Description of Subsection 2.7.3.1.1 and as shown in Figure 2.7.3.1-1.
2. The seismic Category I components and instruments identified in Tables 2.7.3.1-1 and 2.7.3.1-2, including the supports and anchorages, withstand seismic design basis loads without loss of safety function.	2.a Inspections will be performed to verify that the as-built seismic Category I components and instruments are located in the seismic Category I structure.	2.a The as-built seismic Category I components and instruments identified in Tables 2.7.3.1-1 and 2.7.3.1-2 are located in the seismic Category I structure.
	2.b Type tests, analyses or a combination of type tests and analyses of seismic Category I components and instruments will be performed.	2.b A report exists and concludes that the seismic Category I components and instruments identified in Tables 2.7.3.1-1 and 2.7.3.1-2 withstand seismic design basis loads without loss of safety function.
	2.c Inspections will be performed to verify that the as-built seismic Category I components and instruments, including the supports and anchorages, are seismically bounded by the tested or analyzed conditions.	2.c A report exists and concludes that the as-built seismic Category I components and instruments identified in Tables 2.7.3.1-1 and 2.7.3.1-2, including the supports and anchorages, are seismically bounded by the tested or analyzed conditions.
3.a Each of the Class 1E components and instruments identified in Tables 2.7.3.1-1 and 2.7.3.1-2 is powered from its respective Class 1E division.	3.a Tests will be performed by providing a test signal in only one Class 1E division at a time.	3.a The test signal exists at the Class 1E components and instruments identified in Tables 2.7.3.1-1 and 2.7.3.1-2 as being powered from the Class 1E division under test.

Table 2.7.3.1-3 (2 of 6)

Design Commitment	Inspections, Tests, Analyses	Acceptance Criteria
3.b Physical separation and electrical isolation are provided (1) between Class 1E divisions, and (2) between Class 1E divisions and non-Class 1E divisions.	3.b Inspection of the as-built Class 1E divisions will be performed.	3.b Physical separation and electrical isolation exist in accordance with NRC RG 1.75 (1) between Class 1E divisions, and (2) between Class 1E divisions and non-Class 1E divisions.
4.a ESR dampers, PSR dampers, check dampers and tornado dampers identified in Table 2.7.3.1-1 perform an active safety function to change position as indicated in the table.	4.a.i Tests or type tests of ESR dampers and PSR dampers will be performed that demonstrate the capability of the damper to operate under its design conditions.	4.a.i A report exists and concludes that each ESR damper or PSR damper changes position as indicated in Table 2.7.3.1-1 under design conditions.
	4.a.ii Test, analyses, or a combination of test and analyses of the as-built ESR dampers and PSR dampers will be performed under pre-operational test conditions.	4.a.ii Upon receipt of the actuating signal, each ESR damper or PSR damper changes position as indicated in Table 2.7.3.1-1 under pre-operational test conditions.
	4.a.iii Tests of the as-built check dampers, will be performed under pre-operational test conditions.	4.a.iii Each check damper changes position as indicated in Table 2.7.3.1-1 under pre-operational test conditions.
	4.a.iv Tests of the as-built tornado dampers will be performed under pre-operational test conditions.	4.a.iv Each tornado damper changes position as indicated in Table 2.7.3.1-1 under pre-operational test conditions.
4.b After loss of motive power, the ESR dampers and PSR dampers identified in Table 2.7.3.1-1 assume the indicated loss of motive power position.	4.b Tests of the as-built ESR dampers and PSR dampers will be performed under the conditions of loss of motive power.	4.b Upon loss of motive power, each as-built ESR damper, or PSR damper identified in Table 2.7.3.1-1 assumes the indicated loss of motive power position.

Table 2.7.3.1-3 (3 of 6)

Design Commitment		Inspections, Tests, Analyses		Acceptance Criteria	
5.a	Controls exist in the MCR to start and stop the ACUs and AHUs, and to open and close the ESR dampers and PSR dampers identified in Table 2.7.3.1-1.	5.a	Tests of the ACUs, AHUs, ESR dampers, and PSR dampers will be performed using the controls in the MCR to start and stop the ACUs and AHUs, and to open and close the ESR dampers and PSR dampers.	5.a	Controls in the as-built MCR start and stop the ACUs and AHUs, and open and close ESR dampers and PSR dampers identified in Table 2.7.3.1-1.
5.b	Controls exist in the RSR to start and stop the ACUs and AHUs, and to open and close the ESR dampers and PSR dampers identified in Table 2.7.3.1-1.	5.b	Tests of the ACUs, AHUs, ESR dampers, and PSR dampers will be performed using the controls in the RSR to start and stop the ACUs and AHUs, and to open and close the ESR dampers and PSR dampers.	5.b	Controls in the as-built RSR start and stop the ACUs and AHUs, and open and close the ESR dampers and PSR dampers identified in Table 2.7.3.1-1.
5.c	Displays and alarms exist and are retrievable in the MCR as defined in Tables 2.7.3.1-1 and 2.7.3.1-2.	5.c	Inspections of the as-built displays and alarms in the MCR will be performed.	5.c	Displays and alarms exist and are retrieved in the as-built MCR as defined in Tables 2.7.3.1-1 and 2.7.3.1-2.
5.d	Displays and alarms exist and are retrievable in the RSR as defined in Tables 2.7.3.1-1 and 2.7.3.1-2.	5.d	Inspections of the as-built displays and alarms in the RSR will be performed.	5.d	Displays and alarms exist and are retrieved in the as-built RSR as defined in Tables 2.7.3.1-1 and 2.7.3.1-2.
6.	The two mechanical divisions of the control room HVAC system are physically separated.	6.	Inspection of the as-built mechanical divisions will be performed.	6.	The two mechanical divisions of the control room HVAC system are physically separated by a division wall that is a 3-hour rated fire barrier.

Table 2.7.3.1-3 (4 of 6)

Design Commitment	Inspections, Tests, Analyses	Acceptance Criteria
7. The control room HVAC system provides the conditioned air to maintain the room temperature within the design limits for the CRE (except non-safety-related rooms) during plant normal, abnormal and accident conditions.	7. Tests and analyses of the as-built control room HVAC system will be performed.	7. A report exists and concludes that the as-built control room HVAC system is capable of providing the conditioned air to maintain the room temperature within design limits for the CRE (except non-safety-related rooms) during plant normal, abnormal and accident conditions.
8. The control room HVAC system removes particulate matter and iodine, and provides system flow as required in the safety analysis.	8.a Testing and analysis will be performed for each ACU filter to determine filter efficiencies.	8.a A report exists and concludes that ACU filter efficiencies are equal to or greater than 99 % for iodine, and equal to or greater than 99 % for particulate matter greater than 0.3 micron.
	8.b Test of the air flow for the as-built control room HVAC system will be performed.	8.b The as-built control room HVAC system provides the filtered outside makeup air flow of equal to or less than 6,286 cmh (3,700 cfm), the filtered return air flow of equal to or more than 7,305 cmh (4,300 cfm), and maintains 3.175 mm (0.125 in) water gauge of positive pressure in the CRE with respect to adjacent areas during the emergency mode.
9.a The outside air intake isolation dampers in the outside air intake with the higher radiation level close upon receipt of a high radiation signal.	9.a Tests of the as-built outside air intake isolation dampers will be performed using a simulated high radiation signal.	9.a The as-built outside air intake isolation dampers in the outside air intake with the higher radiation level close upon receipt of a simulated high radiation signal.

Table 2.7.3.1-3 (5 of 6)

Design Commitment	Inspections, Tests, Analyses	Acceptance Criteria
9.b After the outside air intake isolation dampers are initially closed upon receipt of a high radiation signal, the closed outside air intake isolation dampers are automatically reset and reopened, and the outside air intake isolation dampers with the higher radiation level automatically close within a predetermined interval.	9.b Tests of the as-built outside air intake isolation dampers will be performed under the condition that they are initially closed after receiving a simulated high radiation signal.	9.b The as-built outside air intake isolation dampers are automatically reset and reopened, and the outside air intake isolation dampers with the higher radiation level automatically close within an interval after they are initially closed upon receipt of a simulated high radiation signal.
10. The control room emergency makeup ACU starts and the ACU inlet isolation damper, the ACU discharge flow control damper, and the ACU return air isolation dampers open upon receipt of ESFAS-SIAS or ESFAS-CREVAS.	10. Tests of the as-built control room emergency makeup ACU, the ACU inlet isolation damper, the ACU discharge flow control damper, and the ACU return air isolation damper will be performed using a simulated ESFAS-SIAS or ESFAS-CREVAS.	10. The as-built control room emergency makeup ACU starts and the as-built ACU inlet isolation damper, the ACU discharge flow control damper, and the ACU return air isolation damper open upon receipt of a simulated high radiation signal.
11. The unfiltered inleakage is within the performance value limit as specified in the safety analysis.	11. Tests and analyses will be performed to verify that as-built unfiltered inleakage is within limits in accordance with ASTM E741-2000.	11. A report exists and concludes that the as-built unfiltered inleakage is less than 170 cmh (100 cfm) in the emergency mode. The 170 cmh (100 cfm) unfiltered inleakage value includes an assumed value of 17 cmh (10 cfm) for CRE ingress/egress.
12. The AHU inlet isolation dampers (PSR) listed in Table 2.7.3.1-1 close within their closure time before the airborne radioactive material passes through the isolation dampers.	12. Test of the as-built AHU inlet isolation dampers (PSR) will be performed using a simulated isolation signal.	12. The AHU inlet isolation dampers (PSR) listed in Table 2.7.3.1-1 close within the 8.4 seconds after receiving a simulated isolation signal.

Table 2.7.3.1-3 (6 of 6)

Design Commitment	Inspections, Tests, Analyses	Acceptance Criteria
13.a The fire dampers are installed in the fire rated barriers and have the same fire resistance rating as the barrier.	13.a Type tests, tests, a combination of type tests and analyses, or a combination of tests and analyses of fire damper rating will be performed.	13.a A report exists and concludes that the fire dampers that penetrate the fire barriers have the same fire resistance rating as the barrier.
13.b The fire dampers which are required to protect safety shutdown capability close under design air flow condition.	13.b Type tests, tests, a combination of type tests and analyses, or a combination of tests and analyses of fire damper closing will be performed under design air flow condition.	13.b A report exists and concludes that the fire dampers which are required to protect safety shutdown capability close under the design air flow condition.
13.c HVAC ducts that penetrate fire barriers have fire dampers in the HVAC ducts.	13.c An inspection will be performed to verify that fire dampers are installed in the as-built HVAC ducts that penetrate the fire barriers.	13.c Fire dampers are installed in the as-built HVAC ducts that penetrate the fire barriers.
14. HVAC duct is installed and routed within the CRE boundary.	14. Inspection will be performed to verify that the as-built HVAC duct is installed and routed within the CRE boundary.	14. HVAC duct is installed and routed within the CRE boundary.
15. The control room HVAC system non-metallic parts, materials, and lubricants used in safety-related mechanical equipment perform their safety-related function up to the end of their qualified life in the design basis harsh environmental conditions (both internal service conditions and external environmental conditions) experienced during normal operations, anticipated operational occurrences, design-basis accidents, and post accident conditions.	15. A type test or a combination of type test and analysis will be performed the containment air radiation monitor non-metallic parts, materials, and lubricants used in safety-related mechanical equipment.	15. A report exists and concludes that the containment air radiation monitor non-metallic parts, materials, and lubricants used in safety-related mechanical equipment perform their safety-related function up to the end of their qualified life under the design basis harsh environmental conditions (both internal service conditions and external environmental conditions) experienced during normal operations, anticipated operational occurrences, design-basis accidents, and post accident conditions.

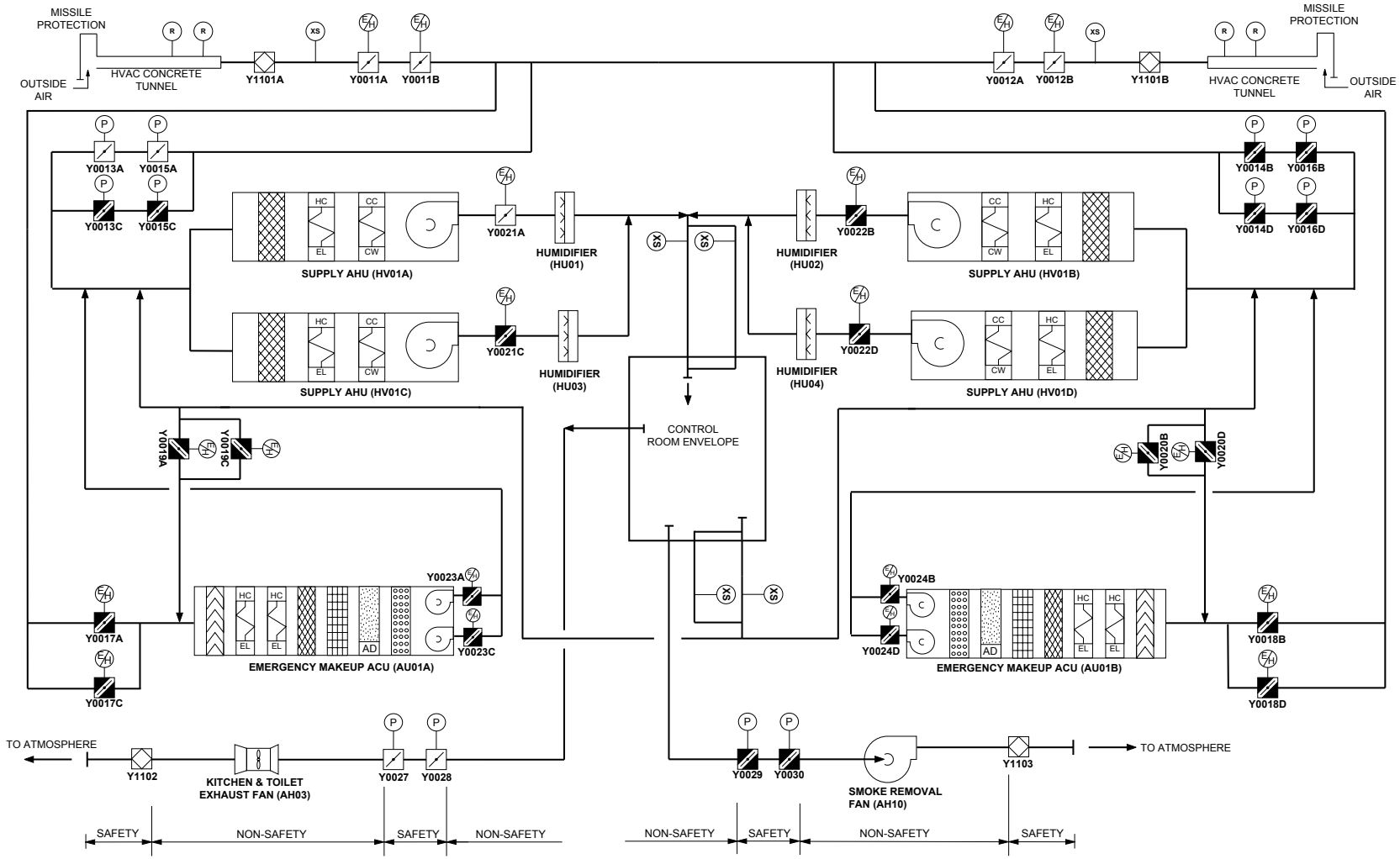

Figure 2.7.3.1-1 Control Room HVAC System

2.7.3.2 Fuel Handling Area HVAC System

2.7.3.2.1 Design Description

The fuel handling area HVAC system provides ventilation, heating, and cooling to fuel handling area located in the auxiliary building.

The fuel handling area HVAC system has safety-related function that provides suitable conditions for fuel handling area and maintains under a slightly negative pressure to the atmosphere.

The fuel handling area HVAC system has normal HVAC subsystem and emergency HVAC subsystem. The normal HVAC subsystem is non-safety-related and has a supply AHU, a normal exhaust ACU, ductwork, instrumentation, and controls.

The emergency HVAC subsystem is safety-related and has two emergency exhaust ACUs, two cubicle coolers, ductwork, instrumentation, and controls.

The fuel handling area HVAC system is designed as follows:

1. The functional arrangement of the fuel handling area HVAC system is as described in the Design Description of Subsection 2.7.3.2.1 and as shown in Figure 2.7.3.2-1.

2. The seismic Category I components and instruments identified in Tables 2.7.3.2-1 and 2.7.3.2-2, including the supports and anchorages, withstand seismic design basis loads without loss of safety function.

3.a The Class 1E components and instruments identified in Tables 2.7.3.2-1 and 2.7.3.2-2 as being qualified for a harsh environment (and the associated wiring, cables, and terminations) withstand the environmental conditions that would exist before, during, and following a design basis accident without loss of safety function for the time required to perform the safety function.

3.b Each of the Class 1E components and instruments identified in Tables 2.7.3.2-1 and 2.7.3.2-2 is powered from its respective Class 1E division.

3.c Physical separation and electrical isolation are provided (1) between Class 1E divisions, and (2) between Class 1E divisions and non-Class 1E divisions.

4.a ESR dampers, PSR dampers and tornado dampers identified in Table 2.7.3.2-1 perform an active safety function to change position as identified in the table.

4.b After loss of motive power, ESR dampers and PSR dampers identified in Table 2.7.3.2-1 assume the indicated loss of motive power position.

5.a Controls exist in the MCR to start and stop the emergency exhaust ACUs and safety-related cubicle coolers, and to open and close ESR dampers and PSR dampers identified in Table 2.7.3.2-1.

5.b Controls exist in the RSR to start and stop the emergency exhaust ACUs and safety-related cubicle coolers, and to open and close ESR dampers and PSR dampers identified in Table 2.7.3.2-1.

5.c Displays and alarms exist and are retrievable in the MCR as defined in Table 2.7.3.2-2.

5.d Displays and alarms exist and are retrievable in the RSR as defined in Table 2.7.3.2-2.

6. The two mechanical divisions of the fuel handling area emergency HVAC subsystem (A/C & B/D) are physically separated.

7. The safety-related cubicle coolers identified in Table 2.7.3.2-1 provide conditioned air that is required to maintain the room temperature within the design limits for the spent fuel pool cooling heat exchanger rooms during plant normal, abnormal and accident conditions.

8. The fuel handling area HVAC system cubicle cooler fans identified in Table 2.7.3.2-1 operate automatically according to room temperature signal.

9. The emergency exhaust ACU in each division removes particulate matter and iodine.

10.a The fuel handling area emergency exhaust ACU starts upon receipt of an ESFAS-FHEVAS or high radiation signal.

10.b The air intake isolation dampers and the normal exhaust ACU isolation dampers close within their design basis closure time upon receipt of an ESFAS-FHEVAS or high radiation signal.

11.a The fire dampers are installed in the fire rated barriers and have the same fire resistance rating as the barrier.

11.b The fire dampers which are required to protect safety shutdown capability close under design air flow condition.

11.c HVAC ducts that penetrate fire barriers have fire dampers in the HVAC ducts.

12. The fuel handling area HVAC system has exhaust airflow rate greater than supply airflow rate to control the release of potential airborne radioactive materials from the fuel handling area during plant normal condition.

13. The fuel handling area HVAC system non-metallic parts, materials, and lubricants used in safety-related mechanical equipment perform their safety-related function up to the end of their qualified life in the design basis harsh environmental conditions (both internal service conditions and external environmental conditions) experienced during normal operations, anticipated operational occurrences, design-basis accidents, and post accident conditions.

2.7.3.2.2 Inspections, Tests, Analyses, and Acceptance Criteria

Table 2.7.3.2-3 specifies the inspections, tests, analyses, and associated acceptance criteria for the fuel handling area HVAC system.

Table 2.7.3.2-1 (1 of 2)

Fuel Handling Area HVAC System Components List

Component Name	Item No.	ASME Section III Class	Seismic Category	Class 1E/ Harsh Envir. Qual.	Display/ Control at MCR	Display/ Control at RSR	Control Signal	Active Safety Function	Loss of Motive Power Position
Emergency Exhaust ACUs	VF-AU02A, AU02B	-	I	Yes/Yes	Yes/Yes	Yes/Yes	FHEVAS or High radiation signal	Start	-
SFP Cooling HX Room Cubicle Coolers	VF-HV02A, HV02B	3(3)	I	Yes/Yes	Yes/Yes	Yes/Yes	High Temperature	Start	-
Air Intake Isolation Dampers (PSR)	VF-Y0001A, Y0002B	-	I	Yes/Yes	Yes/Yes	Yes/Yes	FHEVAS or High radiation signal	Closed	Closed
Normal Exhaust ACU Isolation Dampers (PSR)	VF-Y0003A, Y0004B	-	I	Yes/Yes	Yes/Yes	Yes/Yes	FHEVAS or High radiation signal	Closed	Closed
Emergency Exhaust ACU Isolation Dampers (ESR)	VF-Y0005A, Y0006B	-	I	Yes/Yes	Yes/Yes	Yes/Yes	ACU fan start	Open	Closed
Emergency Exhaust ACU Flow Control Dampers (ESR)	VF-Y0007A, Y0008B	-	I	Yes/Yes	Yes/Yes	Yes/Yes	ACU fan start	Modulated	Closed
Tornado Dampers	VF-Y1201A, Y1201B, Y1202A	-	I	-/No	-/-	-/-	-	Closed (Tornado Condition) Open (After Tornado Condition)	-

Table 2.7.3.2-1 (2 of 2)

(1) Damper actuator types are as follows:
- ESR : Electro hydraulic spring return
- PSR : Pneumatic spring return

(2) Dash(-) indicates not applicable.

(3) The only cooling coil component in the cubicle cooler is ASME Section III Class 3 component.

Table 2.7.3.2-2

Fuel Handling Area HVAC System Instruments List

Instrument Name	Item No.	Location	ASME Section III Class	Seismic Category	Class 1E/ Harsh Envir. Qual.	Display/ Alarm at MCR	Display/ Alarm at RSR
Emergency Exhaust ACU Heating Coil Downstream Temperature	T-3043A, 3044B	Auxiliary Building	-	I	Yes/Yes	Yes/Yes	Yes/Yes
Emergency Exhaust ACU Adsorber Downstream Temperature	T-3045A, 3046B	Auxiliary Building	-	I	Yes/Yes	Yes/Yes	Yes/Yes
Emergency Exhaust ACU Flowrate	F-033A, 034B	Auxiliary Building	-	I	Yes/Yes	Yes/Yes	Yes/Yes
SFP Cooling HX Room Temperature	T-027A, 028B	Auxiliary Building	-	I	Yes/Yes	Yes/Yes	Yes/Yes

(1) Dash(-) indicates not applicable.

Table 2.7.3.2-3 (1 of 6)

Fuel Handling Area HVAC System ITAAC

Design Commitment	Inspections, Tests, Analyses	Acceptance Criteria
1. The functional arrangement of the fuel handling area HVAC system is as described in the Design Description of Subsection 2.7.3.2.1 and as shown in Figure 2.7.3.2-1.	1. Inspection of the as-built fuel handling area HVAC system will be performed.	1. The as-built fuel handling area HVAC system conforms with the functional arrangement as described in the Design Description of Subsection 2.7.3.2.1 and as shown in Figure 2.7.3.2-1.
2. The seismic Category I components and instruments identified in Tables 2.7.3.2-1 and 2.7.3.2-2, including the supports and anchorages, withstand seismic design basis loads without loss of safety function.	2.a Inspections will be performed to verify that the as-built seismic Category I components and instruments are located in the seismic Category I structure.	2.a The as-built seismic Category I components and instruments identified in Tables 2.7.3.2-1 and 2.7.3.2-2 are located in the seismic Category I structure.
	2.b Type tests, analyses or a combination of type tests and analyses of seismic Category I components and instruments will be performed.	2.b A report exists and concludes that the seismic Category I components and instruments identified in Tables 2.7.3.2-1 and 2.7.3.2-2 withstand seismic design basis loads without loss of safety function.
	2.c Inspections will be performed to verify that the as-built seismic Category I components and instruments, including the supports and anchorages, are seismically bounded by the tested or analyzed conditions.	2.c A report exists and concludes that the as-built seismic Category I components and instruments identified in Tables 2.7.3.2-1 and 2.7.3.2-2, including the supports and anchorages, are seismically bounded by the tested or analyzed conditions.

Table 2.7.3.2-3 (2 of 6)

Design Commitment	Inspections, Tests, Analyses	Acceptance Criteria
3.a The Class 1E components and instruments identified in Tables 2.7.3.2-1 and 2.7.3.2-2 as being qualified for a harsh environment (and the associated wiring, cables, and terminations) withstand the environmental conditions that would exist before, during, and following a design basis accident without loss of safety function for the time required to perform the safety function.	3.a.i Type tests or a combination of type tests and analyses will be performed on Class 1E components and instruments located in a harsh environment.	3.a.i A report exists and concludes that the Class 1E components and instruments identified in Tables 2.7.3.2-1 and 2.7.3.2-2 as being qualified for a harsh environment withstand the environmental conditions that would exist before, during, and following a design basis accident without loss of safety function for the time required to perform the safety function.
	3.a.ii Inspections will be performed on the as-built Class 1E components and instruments (and the associated wiring, cables, and terminations) located in a harsh environment.	3.a.ii A report exists and concludes that the as-built Class 1E components and instruments identified in Table 2.7.3.2-1 and 2.7.3.2-2 as being qualified for a harsh environment (and the associated wiring, cables, and terminations) are bounded by type tests or a combination of type tests and analyses.
3.b Each of the Class 1E components and instruments identified in Tables 2.7.3.2-1 and 2.7.3.2-2 is powered from its respective Class 1E division.	3.b Tests will be performed by providing a test signal in only one Class 1E division at a time.	3.b The test signal exists at the Class 1E components and instruments identified in Tables 2.7.3.2-1 and 2.7.3.2-2 as being powered from the Class 1E division under test.
3.c Physical separation and electrical isolation are provided (1) between Class 1E divisions, and (2) between Class 1E divisions and non-Class 1E divisions.	3.c Inspection of the as-built Class1E divisions will be performed.	3.c Physical separation and electrical isolation exist in accordance with NRC RG 1.75 (1) between Class 1E divisions, and (2) between Class 1E divisions and non-Class 1E divisions.

Table 2.7.3.2-3 (3 of 6)

Design Commitment	Inspections, Tests, Analyses	Acceptance Criteria
4.a ESR dampers and PSR dampers and tornado dampers identified in Table 2.7.3.2-1 perform an active safety function to change position as indicated in the table.	4.a.i Tests or type tests of ESR dampers and PSR dampers will be performed that demonstrate the capability of the damper to operate under its design conditions.	4.a.i A report exists and concludes that each ESR damper or PSR damper changes position as indicated in Table 2.7.3.2-1 under design conditions.
	4.a.ii Test, analyses, or a combination of test and analyses of the as-built ESR dampers and PSR dampers will be performed under pre-operational test conditions.	4.a.ii Upon receipt of the actuating signal, each ESR damper or PSR damper changes position as indicated in Table 2.7.3.2-1 under pre-operational test conditions.
	4.a.iii Tests of the as-built tornado dampers will be performed under pre-operational test conditions.	4.a.iii Each tornado damper changes position as indicated in Table 2.7.3.2-1 under pre-operational test conditions.
4.b After loss of motive power, ESR dampers and PSR dampers identified in Table 2.7.3.2-1 assume the indicated loss of motive power position.	4.b Tests of the as-built ESR dampers and PSR dampers will be performed under the conditions of loss of motive power.	4.b Upon loss of motive power, each as-built ESR damper or PSR damper identified in Table 2.7.3.2-1 assumes the indicated loss of motive power position.
5.a Controls exist in the MCR to start and stop the emergency exhaust ACUs and safety-related cubicle coolers, and to open and close ESR dampers and PSR dampers identified in Table 2.7.3.2-1.	5.a Tests of the emergency exhaust ACUs, safety-related cubicle coolers, ESR dampers, and PSR dampers will be performed using the controls in the MCR to start and stop the emergency exhaust ACUs and safety-related cubicle coolers, and to open and close ESR dampers and PSR dampers.	5.a Controls in the as-built MCR start and stop the emergency exhaust ACUs and safety-related cubicle coolers, and open and close ESR dampers and PSR dampers identified in Table 2.7.3.2-1.

Table 2.7.3.2-3 (4 of 6)

Design Commitment	Inspections, Tests, Analyses	Acceptance Criteria
5.b Controls exist in the RSR to start and stop the emergency exhaust ACUs and safety-related cubicle coolers, and to open and close the remotely operated isolation dampers identified in Table 2.7.3.2-1.	5.b Tests of the emergency exhaust ACUs, safety-related cubicle coolers, ESR dampers, and PSR dampers will be performed using the controls in the RSR to start and stop the emergency exhaust ACUs and safety-related cubicle coolers, and to open and close the remotely operated isolation dampers.	5.b Controls in the as-built RSR start and stop the emergency exhaust ACUs and safety-related cubicle coolers, and open and close ESR dampers and PSR dampers identified in Table 2.7.3.2-1.
5.c Displays and alarms exist and are retrievable in the MCR as defined in Table 2.7.3.2-2.	5.c Inspection of the as-built displays and alarms in the MCR will be performed.	5.c Displays and alarms exist and are retrieved in the as-built MCR as defined in Table 2.7.3.2-2.
5.d Displays and alarms exist and are retrievable in the RSR as defined in Table 2.7.3.2-2.	5.d Inspections of the as-built displays and alarms in the RSR will be performed.	5.d Displays and alarms exist and are retrieved in the as-built RSR as defined in Table 2.7.3.2-2.
6. The two mechanical divisions of the fuel handling area emergency HVAC subsystem are physically separated.	6. Inspection of as-built mechanical divisions will be performed.	6. The two mechanical divisions of the fuel handling area emergency HVAC subsystem are separated by a divisional wall that is a 3-hour rated fire barrier.
7. The safety-related cubicle coolers identified in Table 2.7.3.2-1 provide conditioned air that is required to maintain the room temperature within the design limits for the spent fuel pool cooling heat exchanger rooms during plant normal, abnormal and accident conditions.	7. Tests and analyses of the as-built safety-related cubicle coolers will be performed.	7. A report exists and concludes that the as-built safety-related cubicle coolers identified in Table 2.7.3.2-1 are capable of providing conditioned air to maintain the room temperature within the design limits for the spent fuel pool cooling heat exchanger rooms during plant normal, abnormal and accident conditions.

Table 2.7.3.2-3 (5 of 6)

Design Commitment	Inspections, Tests, Analyses	Acceptance Criteria
8. The fuel handling area HVAC system cubicle cooler fans identified in Table 2.7.3.2-1 operate automatically according to room temperature signal.	8. Tests of the as-built fuel handling area HVAC system cubicle cooler fans will be performed using a simulated signal.	8. The as-built fuel handling area HVAC system cubicle cooler fans identified in Table 2.7.3.2-1 operate automatically according to room temperature signal.
9. The emergency exhaust ACU in each division removes particulate matter and iodine.	9. Testing and analysis will be performed on each emergency exhaust ACU to determine filter efficiency.	9. A report exists and concludes that the emergency exhaust ACU filter efficiencies are equal to or greater than 99 % for all forms of iodine, greater than or equal to 99 % for particulate matter greater than 0.3 microns.
10.a The fuel handling area emergency exhaust ACU starts upon receipt of an ESFAS-FHEVAS or high radiation signal.	10.a Tests of the as-built fuel handling area emergency exhaust ACUs will be performed using a simulated ESFAS-FHEVAS or high radiation signal.	10.a The as-built fuel handling area emergency exhaust ACU starts upon receipt of a simulated ESFAS -FHEVAS or high radiation signal.
10.b The air intake isolation dampers and the normal exhaust ACU isolation dampers close within their design basis closure time after receiving an ESFAS-FHEVAS or high radiation signal.	10.b Tests of the as-built air intake isolation dampers and the normal exhaust ACU isolation dampers will be performed using a simulated ESFAS-FHEVAS or high radiation signal.	10.b The as-built air intake isolation dampers and the normal exhaust ACU isolation dampers close within 8.4 seconds after receiving a simulated ESFAS-FHEVAS or high radiation signal.
11.a The fire dampers are installed in the fire rated barriers and have the same fire resistance rating as the barrier.	11.a Type tests, tests, a combination of type tests and analyses, or a combination of tests and analyses of fire damper rating will be performed.	11.a A report exists and concludes that the fire dampers that penetrate the fire barriers have the same fire resistance rating as the barrier.

Table 2.7.3.2-3 (6 of 6)

Design Commitment	Inspections, Tests, Analyses	Acceptance Criteria
11.b The fire dampers which are required to protect safety shutdown capability close under design air flow condition.	11.b Type tests, tests, a combination of type tests and analyses, or a combination of tests and analyses of fire damper closing will be performed under design air flow condition.	11.b A report exists and concludes that the fire dampers which are required to protect safety shutdown capability close under the design air flow condition.
11.c HVAC ducts that penetrate fire barriers have fire dampers in the HVAC ducts.	11.c An inspection will be performed to verify that fire dampers are installed in the as-built HVAC ducts that penetrate the fire barriers.	11.c Fire dampers are installed in the as-built HVAC ducts that penetrate the fire barriers.
12. The fuel handling area HVAC system has exhaust airflow rate greater than supply airflow rate to control the release of potential airborne radioactive materials from the fuel handling area during plant normal condition.	12. Tests of the as-built fuel handling area HVAC system will be performed.	12. A report exists and concludes that the as-built fuel handling area HVAC system provides design exhaust airflow rate that is greater than design supply airflow rate during plant normal condition.
13. The fuel handling area HVAC system non-metallic parts, materials, and lubricants used in safety-related mechanical equipment perform their safety-related function up to the end of their qualified life in the design basis harsh environmental conditions (both internal service conditions and external environmental conditions) experienced during normal operations, anticipated operational occurrences, design-basis accidents, and post accident conditions.	13. A type test or a combination of type test and analysis will be performed the containment air radiation monitor non-metallic parts, materials, and lubricants used in safety- related mechanical equipment.	13. A report exists and concludes that the containment air radiation monitor non-metallic parts, materials, and lubricants used in safety-related mechanical equipment perform their safety-related function up to the end of their qualified life under the design basis harsh environmental conditions (both internal service conditions and external environmental conditions) experienced during normal operations, anticipated operational occurrences, design-basis accidents, and post accident conditions.

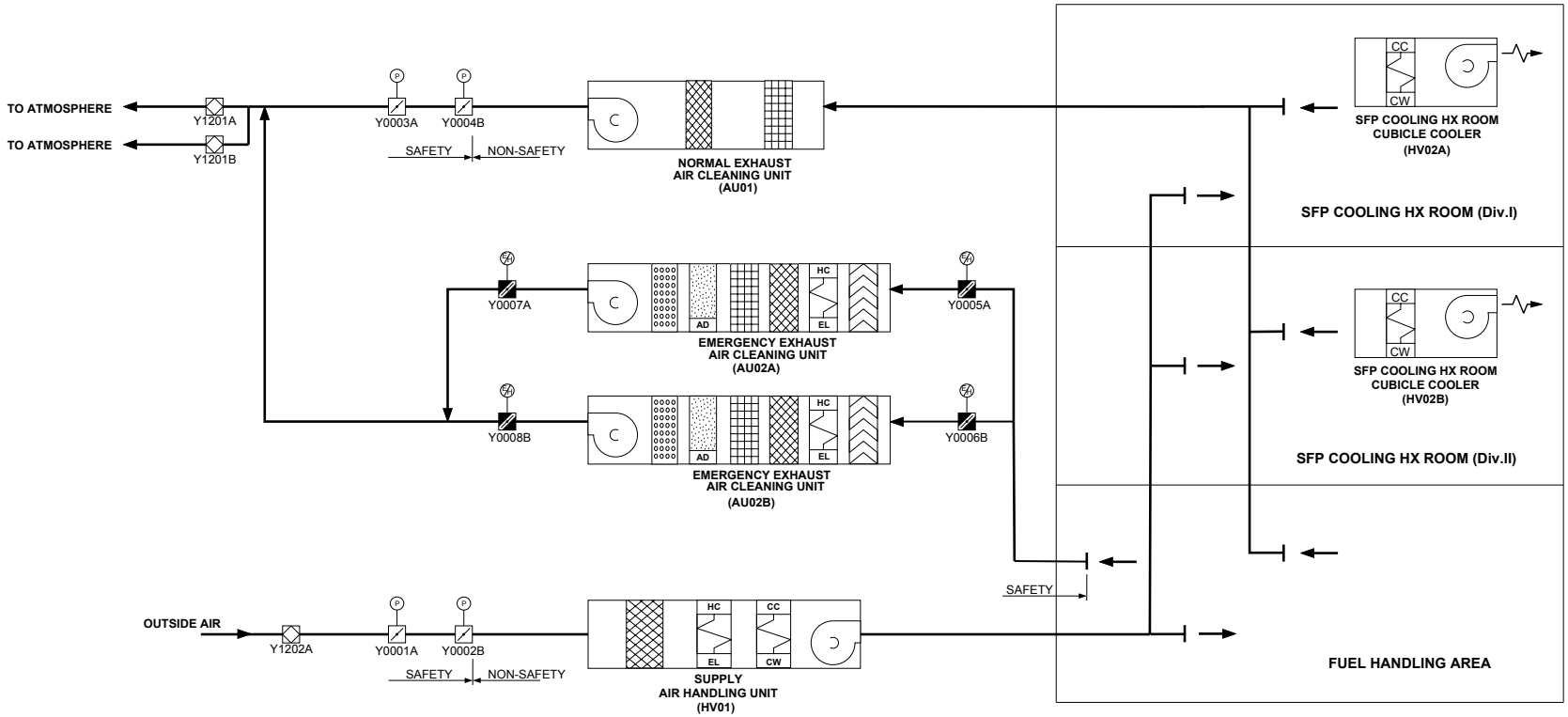

NOTE :

1. SUPPLY AIR HANDLING UNIT AND NORMAL EXHAUST AIR CLEANING UNIT ARE NON SAFETY-RELATED.
2. EMERGENCY EXHAUST AIR CLEANING UNITS AND CUBICLE COOLERS ARE SAFETY-RELATED.

Figure 2.7.3.2-1 Fuel Handling Area HVAC System

2.7.3.3 Auxiliary Building Clean Area HVAC System

2.7.3.3.1 Design Description

The auxiliary building clean area HVAC system provides ventilation, cooling and heating to the auxiliary building clean area and is located inside the auxiliary building clean area. The auxiliary building smoke removal fans are used for smoke removal.

The auxiliary building clean area HVAC system is a non-safety-related system except for safety-related cubicle coolers.

The safety-related cubicle coolers for motor-driven auxiliary feedwater (AFW) pump rooms and essential chiller rooms are cooled by the essential chilled water system.

The auxiliary building clean area HVAC system is designed as follows:

1. The functional arrangement of the auxiliary building clean area HVAC system is as described in the Design Description of Subsection 2.7.3.3.1 and as shown in Figure 2.7.3.3-1.

2. The seismic Category I components and instruments identified in Tables 2.7.3.3-1 and 2.7.3.3-2, including the supports and anchorages, withstand seismic design basis loads without loss of safety function.

3.a Each of the Class 1E components and instruments identified in Tables 2.7.3.3-1 and 2.7.3.3-2 is powered from its respective Class 1E division.

3.b Physical separation and electrical isolation are provided (1) between Class 1E divisions, and (2) between Class 1E divisions and non-Class 1E divisions.

4.a Controls exist in the MCR to start and stop the safety-related cubicle coolers identified in Table 2.7.3.3-1.

4.b Controls exist in the RSR to start and stop the safety-related cubicle coolers identified in Table 2.7.3.3-1.

4.c Displays and alarms exist and are retrievable in the MCR as defined in Table 2.7.3.3-2.

4.d Displays and alarms exist and are retrievable in the RSR as defined in Table 2.7.3.3-2.

5. The two mechanical divisions of the safety-related cubicle coolers are physically separated.

6. The auxiliary building clean area HVAC system provides conditioned air that is required to maintain the room temperature within the design limits for the auxiliary building clean area during plant normal condition.

7. The safety-related cubicle coolers identified in Table 2.7.3.3-1 provide conditioned air that is required to maintain the room temperature within the design limits for the motor-driven AFW pump rooms and essential chiller rooms during plant normal, abnormal and accident conditions.

8. The auxiliary building clean area HVAC system cubicle cooler fans identified in Table 2.7.3.3-1 operate automatically according to room temperature signal.

9.a The fire dampers are installed in the fire rated barriers and have the same fire resistance rating as the barrier.

9.b The fire dampers which are required to protect safety shutdown capability close under design air flow condition.

9.c HVAC ducts that penetrate fire barriers have fire dampers in the HVAC ducts.

2.7.3.3.2 Inspections, Tests, Analyses, and Acceptance Criteria

Table 2.7.3.3-3 specifies the inspections, tests, analyses, and associated acceptance criteria for the auxiliary building clean area HVAC system.

Table 2.7.3.3-1

Auxiliary Building Clean Area HVAC System Components List

Component Name	Item No.	ASME Section III Class	Seismic Category	Class 1E/ Harsh Envir. Qual.	Display/ Control at MCR	Display/ Control at RSR	Control Signal	Active Safety Function	Loss of Motive Power Position
Essential Chiller Room Cubicle Coolers	VO-HV31A/31B, HV32A/32B	3(2)	I	Yes/No	Yes/Yes	Yes/Yes	High Temperature	Start	-
Motor-Driven AFW Pump Room Cubicle Coolers	VO-HV33A/33B	3(2)	I	Yes/No	Yes/Yes	Yes/Yes	High Temperature	Start	-

(1) Dash(-) indicates not applicable.
(2) The only cooling coil component in the cubicle cooler is ASME Section III Class 3 component.

Table 2.7.3.3-2

Auxiliary Building Clean Area HVAC System Instruments List

Instrument Name	Item No.	Location	ASME Section III Class	Seismic Category	Class 1E/ Harsh Envir. Qual.	Display/ Alarm at MCR	Display/ Alarm at RSR
Essential Chiller Room Temperature	T-081A, 082B, 083C, 084D	Auxiliary Building	-	I	Yes/No	Yes/Yes	Yes/Yes
Motor-Driven AFW Pump Room Temperature	T-085A, 086B	Auxiliary Building	-	I	Yes/ No	Yes/Yes	Yes/Yes

(1) Dash(-) indicates not applicable.

Table 2.7.3.3-3 (1 of 3)

Auxiliary Building Clean Area HVAC System ITAAC

Design Commitment	Inspections, Tests, Analyses	Acceptance Criteria
1. The functional arrangement of the auxiliary building clean area HVAC system is as described in the Design Description of Subsection 2.7.3.3.1 and as shown in Figure 2.7.3.3-1.	1. Inspection of the as-built the auxiliary building clean area HVAC system will be performed.	1. The as-built auxiliary building clean area HVAC system conforms with the functional arrangement as described in the Design Description of Subsection 2.7.3.3.1 and as shown in Figure 2.7.3.3-1.
2. The seismic Category I components and instruments identified in Tables 2.7.3.3-1 and 2.7.3.3-2, including the supports and anchorages, withstand seismic design basis loads without loss of safety function.	2.a Inspections will be performed to verify that the as-built seismic Category I components and instruments are located in the seismic Category I structure.	2.a The as-built seismic Category I components and instruments identified in Tables 2.7.3.3-1 and 2.7.3.3-2 are located in the seismic Category I structure.
	2.b Type tests, analyses or a combination of type tests and analyses of seismic Category I components and instruments will be performed.	2.b A report exists and concludes that the seismic Category I components and instruments identified in Tables 2.7.3.3-1 and 2.7.3.3-2 withstand seismic design basis loads without loss of safety function.
	2.c Inspections will be performed to verify that the as-built seismic Category I components and instruments, including the supports and anchorages, are seismically bounded by the tested or analyzed conditions.	2.c A report exists and concludes that the as-built seismic Category I components and instruments identified in Tables 2.7.3.3-1 and 2.7.3.3-2, including the supports and anchorages, are seismically bounded by the tested or analyzed conditions.
3.a Each of the Class 1E components and instruments identified in Tables 2.7.3.3-1 and 2.7.3.3-2 is powered from its respective Class 1E division.	3.a Tests will be performed by providing a test signal in only one Class 1E division at a time.	3.a The test signal exists at the Class 1E components and instruments identified in Tables 2.7.3.3-1 and 2.7.3.3-2 as being powered from its respective Class 1E division under test.

Table 2.7.3.3-3 (2 of 3)

Design Commitment		Inspections, Tests, Analyses		Acceptance Criteria	
3.b	Physical separation and electrical isolation are provided (1) between Class 1E divisions, and (2) between Class 1E divisions and non-Class 1E divisions.	3.b	Inspection of the as-built Class1E divisions will be performed.	3.b	Physical separation and electrical isolation exist in accordance with NRC RG 1.75 (1) between Class 1E divisions, and (2) between Class 1E divisions and non-Class 1E divisions.
4.a	Controls exist in the MCR to start and stop the safety-related cubicle coolers identified in Table 2.7.3.3-1.	4.a	Tests of the safety-related cubicle coolers will be performed using the controls in the MCR to start and stop the safety-related cubicle coolers.	4.a	Controls in the as-built MCR start and stop the safety-related cubicle coolers identified in Table 2.7.3.3-1.
4.b	Controls exist in the RSR to start and stop the safety-related cubicle coolers identified in Table 2.7.3.3-1.	4.b	Tests of the safety-related cubicle coolers will be performed using the controls in the RSR to start and stop the safety-related cubicle coolers.	4.b	Controls in the as-built RSR start and stop the safety-related cubicle coolers identified in Table 2.7.3.3-1.
4.c	Displays and alarms exist and are retrievable in the MCR as defined in Table 2.7.3.3-2.	4.c	Inspection of the as-built displays and alarms in the MCR will be performed.	4.c	Displays and alarms exist and are retrieved in the as-built MCR as defined in Table 2.7.3.3-2.
4.d	Displays and alarms exist and are retrievable in the RSR as defined in Table 2.7.3.3-2.	4.d	Inspection of the as-built displays and alarms in the RSR will be performed.	4.d	Displays and alarms exist and are retrieved in the as-built RSR as defined in Table 2.7.3.3-2.
5.	The two mechanical divisions of the safety-related cubicle coolers are physically separated.	5.	Inspection of the as-built mechanical divisions will be performed.	5.	The two mechanical divisions of the safety-related cubicle coolers are separated by a divisional wall or a fire barrier.
6.	The auxiliary building clean area HVAC system provides conditioned air that is required to maintain the room temperature within the design limits for the auxiliary building clean area during plant normal condition.	6.	Tests and analyses of the as-built auxiliary building clean area HVAC system will be performed.	6.	A report exists and concludes that the as-built auxiliary building clean area HVAC system is capable of providing conditioned air to maintain the room temperature within the design limits for the auxiliary building clean area during plant normal condition.

Table 2.7.3.3-3 (3 of 3)

Design Commitment	Inspections, Tests, Analyses	Acceptance Criteria
7. The safety-related cubicle coolers identified in Table 2.7.3.3-1 provide conditioned air that is required to maintain the room temperature within the design limits for the motor-driven AFW pump rooms and essential chiller rooms during plant normal, abnormal and accident conditions.	7. Tests and analyses of the as-built safety-related cubicle coolers will be performed.	7. A report exists and concludes that the as-built safety-related cubicle coolers identified in Table 2.7.3.3-1 are capable of providing conditioned air to maintain the room temperature within the design limits for motor-driven AFW pump rooms and essential chiller rooms during plant normal, abnormal and accident conditions.
8. The auxiliary building clean area HVAC system cubicle cooler fans identified in Table 2.7.3.3-1 operate automatically according to room temperature signal.	8. Tests of the as-built auxiliary building clean area HVAC system cubicle cooler fans will be performed using a simulated signal.	8. The as-built auxiliary building clean area HVAC system cubicle cooler fans identified in Table 2.7.3.3-1 operate automatically according to room temperature signal.
9.a The fire dampers are installed in the fire rated barriers and have the same fire resistance rating as the barrier.	9.a Type tests, tests, a combination of type tests and analyses, or a combination of tests and analyses of fire damper rating will be performed.	9.a A report exists and concludes that the fire dampers that penetrate the fire barriers have the same fire resistance rating as the barrier.
9.b The fire dampers which are required to protect safety shutdown capability close under design air flow condition.	9.b Type tests, tests, a combination of type tests and analyses, or a combination of tests and analyses of fire damper closing will be performed under design air flow condition.	9.b A report exists and concludes that the fire dampers which are required to protect safety shutdown capability close under the design air flow condition.
9.c HVAC ducts that penetrate fire barriers have fire dampers in the HVAC ducts.	9.c An inspection will be performed to verify that fire dampers are installed in the as-built HVAC ducts that penetrate the fire barriers.	9.c Fire dampers are installed in the as-built HVAC ducts that penetrate the fire barriers.

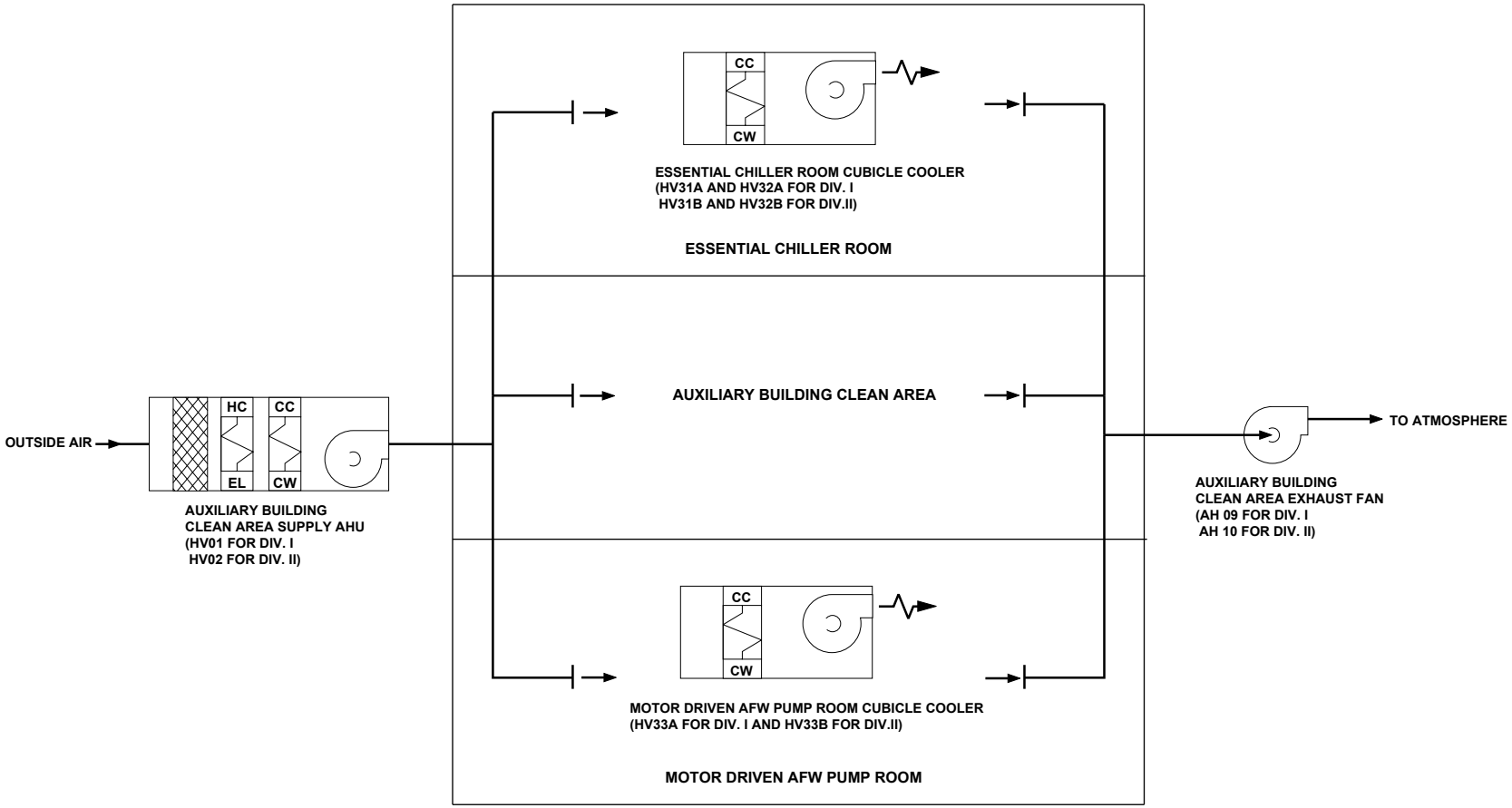

NOTE : THIS SYSTEM IS NON SAFETY-RELATED EXCEPT FOR ESSENTIAL CHILLER ROOM AND MOTOR DRIVEN AFW PUMP ROOM CUBICLE COOLERS.
ESSENTIAL CHILLER ROOM AND MOTOR DRIVEN AFW PUMP ROOM CUBICLE COOLERS ARE SAFETY-RELATED.

Figure 2.7.3.3-1 Auxiliary Building Clean Area HVAC System

2.7.3.4 Turbine Generator Building HVAC System

No entry for this system.

2.7.3.5 Engineered Safety Features Ventilation System

The engineered safety features (ESF) ventilation system includes:

a. Emergency diesel generator area HVAC system

b. Electrical and I&C equipment areas HVAC system

c. Auxiliary building controlled area HVAC system

2.7.3.5.1 Design Description

2.7.3.5.1.1 Emergency Diesel Generator Area HVAC System

The emergency diesel generator area HVAC system is a safety-related system that provides ventilation, cooling and heating to four emergency diesel generator areas. The emergency diesel generator area HVAC system is located inside the auxiliary building and emergency diesel generator building.

The emergency diesel generator area HVAC system consists of four divisions. Each division of the emergency diesel generator area HVAC system has an air handling unit (AHU), fans, cubicle coolers, dampers, ductwork, instrumentation and controls.

2.7.3.5.1.2 Electrical and I&C Equipment Areas HVAC System

The electrical and I&C equipment areas HVAC system is a safety-related system that provides ventilation, cooling and heating to the electrical equipment rooms and I&C equipment rooms. The electrical and I&C equipment areas HVAC system is located in the auxiliary building.

The electrical and I&C equipment areas HVAC system consists of two divisions. Each division of the electrical and I&C equipment areas HVAC system has battery room exhaust fans, RSR supply fan and RSR exhaust fan, cubicle coolers, ductwork, instrumentation and controls.

The safety-related electrical rooms and I&C equipment rooms are cooled by the safety-related cubicle coolers.

2.7.3.5.1.3 Auxiliary Building Controlled Area HVAC System

The auxiliary building controlled area HVAC system is a safety-related system that provides ventilation, cooling and heating to the auxiliary building controlled area. The auxiliary building controlled area HVAC system is located in the auxiliary building controlled area.

The auxiliary building controlled area HVAC system consists of two divisions. Each division of the auxiliary building controlled area HVAC system has air handling units, air cleaning units, cubicle coolers, dampers, ductwork, instrumentation and controls.

Each division of auxiliary building controlled area HVAC system maintains its division of the auxiliary building controlled area under a slightly negative pressure relative to the atmosphere.

The ESF ventilation system is designed as follows:

1.a The functional arrangement of the emergency diesel generator area HVAC system is as described in the Design Description of Subsection 2.7.3.5.1.1 and as shown in Figure 2.7.3.5-1.

1.b The functional arrangement of the electrical and I&C equipment areas HVAC system is as described in the Design Description of Subsection 2.7.3.5.1.2 and as shown in Figure 2.7.3.5-2.

1.c The functional arrangement of the auxiliary building controlled area HVAC system is as described in the Design Description of Subsection 2.7.3.5.1.3 and as shown in Figure 2.7.3.5-3.

2. The seismic Category I components and instruments identified in Tables 2.7.3.5-1 and 2.7.3.5-2, including the supports and anchorages, withstand seismic design basis loads without loss of safety function.

3.a The Class 1E components and instruments identified in Tables 2.7.3.5-1 and 2.7.3.5-2 as being qualified for a harsh environment (and the associated wiring, cables, and terminations) withstand the environmental conditions that would exist before, during, and following a design basis accident without loss of safety function for the time required to perform the safety function.

3.b Each of the Class 1E components and instruments identified in Tables 2.7.3.5-1 and 2.7.3.5-2 is powered from its respective Class 1E division.

3.c Physical separation and electrical isolation are provided (1) between Class 1E divisions, and (2) between Class 1E divisions and non-Class 1E divisions.

4.a ESR dampers, PSR dampers and tornado dampers identified in Table 2.7.3.5-1 perform an active safety function to change position as indicated in the table.

4.b After loss of motive power, ESR dampers and PSR dampers identified in Table 2.7.3.5-1 assume the indicated loss of motive power position.

5.a Controls exist in the MCR to start and stop the ACUs, AHUs and cubicle coolers, and to open and close ESR dampers and PSR dampers identified in Table 2.7.3.5-1.

5.b Controls exist in the RSR to start and stop the ACUs, AHUs and cubicle coolers, and to open and close ESR dampers and PSR dampers identified in Table 2.7.3.5-1.

5.c Displays and alarms exist and are retrievable in the MCR as defined in Table 2.7.3.5-2.

5.d Displays and alarms exist and are retrievable in the RSR as defined in Table 2.7.3.5-2.

6.a Each mechanical division of the emergency diesel generator area HVAC system (A, B, C & D) is physically separated from the other divisions.

6.b The two mechanical divisions of the electrical and I&C equipment areas HVAC system (A/C & B/D) are physically separated.

6.c The two mechanical divisions of the auxiliary building controlled area HVAC system (A/C & B/D) are physically separated.

7.a The emergency diesel generator area HVAC system provides conditioned air that is required to maintain the room temperature within the design limits for the emergency diesel generator area during plant normal, abnormal and accident conditions.

7.b The electrical and I&C equipment areas HVAC system provides conditioned air that is required to maintain the room temperature within the design limits for the electrical and I&C equipment areas except non-safety-related equipment rooms during plant normal, abnormal and accident conditions.

7.c The auxiliary building controlled area HVAC system provides conditioned air that is required to maintain the room temperature within the design limits for the safety-related rooms in the auxiliary building controlled area during plant normal, abnormal and accident conditions.

8. The emergency diesel generator area HVAC system, the electrical and I&C equipment areas HVAC system and the auxiliary building controlled area HVAC system cubicle cooler fans identified in Table 2.7.3.5-1 operate automatically according to room temperature signal.

9. The auxiliary building controlled area emergency exhaust ACU removes particulate matter and iodine and provides a negative pressure.

10. The auxiliary building controlled area emergency exhaust ACUs start and the auxiliary building controlled area supply AHU outlet isolation dampers and the auxiliary building controlled area normal exhaust ACU inlet isolation dampers close upon receipt of an ESFAS-SIAS.

11. The electrical and I&C equipment areas HVAC system provides battery room ventilation that is required to maintain hydrogen concentration within the design limit during plant normal, abnormal and accident conditions.

12.a The fire dampers are installed in the fire rated barriers and have the same fire resistance rating as the barrier.

12.b The fire dampers which are required to protect safety shutdown capability close under design air flow condition.

12.c HVAC ducts that penetrate fire barriers have fire dampers in the HVAC ducts.

13. The auxiliary building controlled area HVAC system has exhaust airflow rate greater than supply airflow rate to control the release of potential airborne

radioactive materials from the auxiliary building controlled area during plant normal condition.

14. The auxiliary building controlled area HVAC system non-metallic parts, materials, and lubricants used in safety-related mechanical equipment perform their safety-related function up to the end of their qualified life in the design basis harsh environmental conditions (both internal service conditions and external environmental conditions) experienced during normal operations, anticipated operational occurrences, design-basis accidents, and post accident conditions.

2.7.3.5.2 Inspections, Tests, Analyses, and Acceptance Criteria

Table 2.7.3.5-3 specifies the inspections, tests, analyses, and associated acceptance criteria for the engineered safety features ventilation system.

Table 2.7.3.5-1 (1 of 4)

Engineered Safety Features Ventilation System Components List

Component Name	Item No.(1)	ASME Section III Class	Seismic Category	Class 1E/ Harsh Envir. Qual.	Display/ Control at MCR	Display/ Control at RSR	Control Signal	Active Safety Function	Loss of Motive Power Position
Emergency Diesel Generator Area HVAC System									
EDG Room Normal Supply AHU	VD–HV11A/B/C/D	3(4)	I	Yes/No	Yes/Yes	Yes/Yes	-	Start	-
EDG Room Emergency Cubicle Cooler	VD–HV12A/B/C/D, HV13A/B/C/D	3(4)	I	Yes/No	Yes/Yes	Yes/Yes	High Temperature	Start	-
EDG Control Room Cubicle Cooler	VD–HV10A/B/C/D	3(4)	I	Yes/No	Yes/Yes	Yes/Yes	High Temperature	Start	-
Room Fan	VD–AH02A/B/C/D AH05A/B/C/D AH06A/B/C/D AH07A/B/C/D	-	I	Yes/No	Yes/Yes	Yes/Yes	-	Start	-
Tornado Dampers	VD-Y1201A/B/C/D 1202A/B/C/D 1203A/B/C/D 1204A/B/C/D 1205A/B/C/D	-	I	-/No	-/-	-/-	-	Closed (Tornado Condition) Open (After Tornado Condition)	-

Table 2.7.3.5-1 (2 of 4)

Component Name	Item No.(1)	ASME Section III Class	Seismic Category	Class 1E/ Harsh Envir. Qual.	Display/ Control at MCR	Display/ Control at RSR	Control Signal	Active Safety Function	Loss of Motive Power Position
Electrical and I&C Equipment Areas HVAC System									
Safety- Related Cubicle Cooler	VE-HV01A~04A, HV06A, 07A, HV09A~18A, HV01B~04B, HV06B~18B	3(4)	I	Yes/No	Yes/Yes	Yes/Yes	High Temperature	Start	-
Class 1E Battery Room Supply Fan	VE-AH20A/B/C/D	-	I	Yes/No	Yes/Yes	Yes/Yes	-	Start	-
Class 1E Battery Room Exhaust Fan	VE-AH21A/B/C/D	-	I	Yes/No	Yes/Yes	Yes/Yes	-	Start	-
RSR Supply Fan	VE-AH22C/D	-	I	Yes/No	Yes/Yes	Yes/Yes	-	Start	-
RSR Exhaust Fan	VE-AH23C/D	-	I	Yes/No	Yes/Yes	Yes/Yes	-	Start	-
Tornado Dampers	VE-Y1451A/B/C/D, 1452A/B/C/D, 1453C/1454C	-	I	-/No	-/-	-/-	-	Closed (Tornado Condition) Open (After Tornado Condition)	-

Table 2.7.3.5-1 (3 of 4)

Component Name	Item No.(1)	ASME Section III Class	Seismic Category	Class 1E/ Harsh Envir. Qual.	Display/ Control at MCR	Display/ Control at RSR	Control Signal	Active Safety Function	Loss of Motive Power Position
Auxiliary Building Controlled Area HVAC System									
Auxiliary building controlled area emergency exhaust ACU	VK-AU01A/01B/ 01C/01D	-	I	Yes/Yes	Yes/Yes	Yes/Yes	SIAS	Start	-
Safety-related cubicle cooler	VK-HV13A/13B/ 14A/14B	-	I	Yes/No	Yes/Yes	Yes/Yes	High Temperature	Start	-
Safety-related cubicle cooler	VK-HV10A/10B/ 11A/11B/ 12A/12B/ 15A/15B/ 16A/16B/ 17A/17B/ 18A/18B/ 19A/19B/ 20A/20B/ 21B/ 22A/22B/ 23A/23B	-	I	Yes/Yes	Yes/Yes	Yes/Yes	High Temperature	Start	-
Auxiliary building controlled area supply AHU outlet isolation damper (PSR)	VK-Y0017A/18A/ 19B/20B	-	I	Yes/No	Yes/Yes	Yes/Yes	SIAS	Closed	Closed
Auxiliary building controlled area normal exhaust ACU inlet isolation damper (PSR)	VK-Y0021A/22A/ 23B/24B	-	I	Yes/No	Yes/Yes	Yes/Yes	SIAS	Closed	Closed

Table 2.7.3.5-1 (4 of 4)

Component Name	Item No.(1)	ASME Section III Class	Seismic Category	Class 1E/ Harsh Envir. Qual.	Display/ Control at MCR	Display/ Control at RSR	Control Signal	Active Safety Function	Loss of Motive Power Position
Auxiliary Building Controlled Area HVAC System									
Auxiliary building controlled area emergency exhaust ACU isolation damper (ESR)	VK-Y0002A/ 0002B/ 0002C/ 0002D	-	I	Yes/Yes	Yes/Yes	Yes/Yes	ACU fan start	Closed	Closed
Auxiliary building controlled area emergency exhaust ACU flow control damper (ESR)	VK-Y0001A/ 0001B/ 0001C/ 0001D	-	I	Yes/Yes	Yes/Yes	Yes/Yes	ACU fan start	Modulate	Closed
Tornado Dampers	VK-Y1401A/ 1402B	-	I	-/No	-/-	-/-	-	Closed (Tornado Condition) Open (After Tornado Condition)	-

(1) The component that the item no. ends with A or B is located in the EDG building and the component that the item no. ends with C or D is located in the auxiliary building.
(2) Damper actuator types are as follows:
- ESR : Electro hydraulic spring return
- PSR : Pneumatic spring return
(3) Dash(-) indicates not applicable.
(4) The only cooling coil component in the AHU & cubicle cooler is ASME Section III Class 3 component.

Table 2.7.3.5-2 (1 of 3)

Engineered Safety Features Ventilation System Instruments List

Instrument Name	Item No.	Location	ASME Section III Class	Seismic Category	Class 1E/ Harsh Envir. Qual.	Display/ Alarm at MCR	Display/ Alarm at RSR
Emergency Diesel Generator Area HVAC System							
EDG Room Normal Supply AHU flow rate	F-11A, 12B	EDG Building	-	I	Yes/No	Yes/Yes	Yes/Yes
EDG Room Normal Supply AHU heating coil downstream temperature	T-3005A, 3006B	EDG Building	-	I	Yes/No	Yes/Yes	Yes/Yes
EDG Room Normal Supply AHU cooling coil downstream temperature	T-3009A, 3010B	EDG Building	-	I	Yes/No	Yes/Yes	Yes/Yes
EDG Room Temperature	T-13A, 14B, 17A, 18B	EDG Building	-	I	Yes/No	Yes/Yes	Yes/Yes
EDG Control Room Temperature	T-21A, 22B	EDG Building	-	I	Yes/No	Yes/Yes	Yes/Yes
EDG Room Normal Supply AHU flow rate	F-13C, 14D	Auxiliary building	-	I	Yes/No	Yes/Yes	Yes/Yes
EDG Room Normal Supply AHU heating coil downstream temperature	T-3007C, 3008D	Auxiliary building	-	I	Yes/No	Yes/Yes	Yes/Yes
EDG Room Normal Supply AHU cooling coil downstream temperature	T-3011C, 3012D	Auxiliary building	-	I	Yes/No	Yes/Yes	Yes/Yes
EDG Room Temperature	T-15C, 16D, 19C, 20D	Auxiliary building	-	I	Yes/No	Yes/Yes	Yes/Yes
EDG Control Room Temperature	T-23C, 24D	Auxiliary building	-	I	Yes/No	Yes/Yes	Yes/Yes

Table 2.7.3.5-2 (2 of 3)

Instrument Name	Item No.	Location	ASME Section III Class	Seismic Category	Class 1E/ Harsh Envir. Qual.	Display/ Alarm at MCR	Display/ Alarm at RSR
Electrical and I&C Equipment Areas HVAC System							
RSR Supply Fan flow rate	F-138C, 139D	Auxiliary building	-	I	Yes/No	Yes/Yes	Yes/Yes
RSR Exhaust Fan flow rate	F-140C, 141D	Auxiliary building	-	I	Yes/No	Yes/Yes	Yes/Yes
RSR Cubicle Cooler Fan Return flow rate	F-142C, 143D	Auxiliary building	-	I	Yes/No	Yes/Yes	Yes/Yes
Safety-Related Electrical and I&C Room Temperature	T-101C, 102D, 103C, 104D, 105A, 106B, 107C, 108D, 111A, 112B, 113A, 114B, 116B, 117C, 118D, 119C, 120D, 121C, 122D, 123A, 124B, 125A, 126B, 127A, 128B, 129A, 130B, 131A, 132B, 133C, 134D, 135C, 136D	Auxiliary building	-	I	Yes/No	Yes/Yes	Yes/Yes

Table 2.7.3.5-2 (3 of 3)

Instrument Name	Item No.	Location	ASME Section III Class	Seismic Category	Class 1E/ Harsh Envir. Qual.	Display/ Alarm at MCR	Display/ Alarm at RSR
Auxiliary Building Controlled Area HVAC System							
Auxiliary building controlled area emergency exhaust ACU Fan Flow Rate	F-45A, 46B, 49C, 50D	Auxiliary building	-	I	Yes/Yes	Yes/Yes	Yes/Yes
Auxiliary building controlled area emergency exhaust ACU Heating Coil Downstream Temperature	T-3023A, 3024B, 3053C, 3054D	Auxiliary building	-	I	Yes/Yes	Yes/Yes	Yes/Yes
Auxiliary building controlled area emergency exhaust ACU Carbon Adsorber Downstream Temperature	T-3033A, 3034B, 3063C, 3064D	Auxiliary building	-	I	Yes/Yes	Yes/Yes	Yes/Yes
Safety-Related Mechanical Equipment Room Temperature	T-207C, 208D, 209C, 210D, 211A, 212B, 213A, 214B, 215C, 216D, 217C, 218D, 219A, 220B, 221A, 222B, 201A, 202B, 223A, 228B, 205A, 204B, 224B, 233A, 234B, 235A, 236B	Auxiliary building	-	I	Yes/Yes	Yes/Yes	Yes/Yes

(1) Dash(-) indicates not applicable.

Table 2.7.3.5-3 (1 of 8)

Engineered Safety Features Ventilation System ITAAC

Design Commitment	Inspections, Tests, Analyses	Acceptance Criteria
1.a The functional arrangement of the emergency diesel generator area HVAC system is as described in the Design Description of Subsection 2.7.3.5.1.1 and as shown in Figure 2.7.3.5-1.	1.a Inspection of the as-built emergency diesel generator area HVAC system will be performed.	1.a The as-built emergency diesel generator area HVAC system conforms with the functional arrangement as described in the Design Description of Subsection 2.7.3.5.1.1 and as shown in Figure 2.7.3.5-1.
1.b The functional arrangement of the electrical and I&C equipment areas HVAC system is as described in the Design Description of Subsection 2.7.3.5.1.2 and as shown in Figure 2.7.3.5-2.	1.b Inspection of the as-built electrical and I&C equipment areas HVAC system will be performed.	1.b The as-built electrical and I&C equipment areas HVAC system conforms with the functional arrangement as described in the Design Description of Subsection 2.7.3.5.1.2 and as shown in Figure 2.7.3.5-2.
1.c The functional arrangement of the auxiliary building controlled area HVAC system is as described in the Design Description of Subsection 2.7.3.5.1.3 and as shown in Figure 2.7.3.5-3.	1.c Inspection of the as-built auxiliary building controlled area HVAC system will be performed.	1.c The as-built auxiliary building controlled area HVAC system conforms with the functional arrangement as described in the Design Description of Subsection 2.7.3.5.1.3 and as shown in Figure 2.7.3.5-3.
2. The seismic Category I components and instruments identified in Tables 2.7.3.5-1 and 2.7.3.5-2, including the supports and anchorages, withstand seismic design basis loads without loss of safety function.	2.a Inspections will be performed to verify that the as-built seismic Category I components and instruments are located in the seismic Category I structure.	2.a The as-built seismic Category I components and instruments identified in Tables 2.7.3.5-1 and 2.7.3.5-2 are located in the seismic Category I structure.

Table 2.7.3.5-3 (2 of 8)

Design Commitment	Inspections, Tests, Analyses	Acceptance Criteria
2. (cont.)	2.b Type tests, analyses or a combination of type tests and analyses of seismic Category I components and instruments will be performed.	2.b A report exists and concludes that the seismic Category I components and instruments identified in Tables 2.7.3.5-1 and 2.7.3.5-2 withstand seismic design basis loads without loss of safety function.
	2.c Inspections will be performed to verify that the as-built seismic Category I components and instruments, including the supports and anchorages, are seismically bounded by the tested or analyzed conditions.	2.c A report exists and concludes that the as-built seismic Category I components and instruments identified in Tables 2.7.3.5-1 and 2.7.3.5-2, including the supports and anchorages, are seismically bounded by the tested or analyzed conditions.
3.a The Class 1E components and instruments identified in Tables 2.7.3.5-1 and 2.7.3.5-2 as being qualified for a harsh environment (and the associated wirinig, cables, and terminations) withstand the environmental conditions that would exist before, during, and following a design basis accident without loss of safety function for the time required to perform the safety function.	3.a.i Type tests or a combination of type tests and analyses will be performed on Class 1E components and instruments located in a harsh environment.	3.a.i A report exists and concludes that the Class 1E components and instruments identified in Tables 2.7.3.5-1 and 2.7.3.5-2 as being qualified for a harsh environment withstand the environmental conditions that would exist before, during, and following a design basis accident without loss of safety function for the time required to perform the safety function.

Table 2.7.3.5-3 (3 of 8)

Design Commitment	Inspections, Tests, Analyses	Acceptance Criteria
3.a (cont.)	3.a.ii Inspections will be performed on the as-built Class 1E components and instruments (and the associated wiring, cables, and terminations) located in a harsh environment.	3.a.ii A report exists and concludes that the as-built Class 1E components and instruments identified in Tables 2.7.3.5-1 and 2.7.3.5-2 as being qualified for a harsh environment (and the associated wiring, cables, and terminations) are bounded by type tests or a combination of type tests and analyses.
3.b Each of the Class 1E components and instruments identified in Tables 2.7.3.5-1 and 2.7.3.5-2 is powered from its respective Class 1E division.	3.b Tests will be performed by providing a test signal in only one Class 1E division at a time.	3.b The test signal exists at the Class 1E components and instruments identified in Tables 2.7.3.5-1 and 2.7.3.5-2 as being powered from the Class 1E division under test.
3.c Physical separation and electrical isolation are provided (1) between Class 1E divisions, and (2) between Class 1E divisions and non-Class 1E divisions.	3.c Inspection of the as-built Class 1E divisions will be performed.	3.c Physical separation and electrical isolation exist in accordance with NRC RG 1.75 (1) between Class 1E divisions, and (2) between Class 1E divisions and non-Class 1E divisions.
4.a ESR dampers, PSR dampers and tornado dampers identified in Table 2.7.3.5-1 perform an active safety function to change position as indicated in the table.	4.a.i Tests or type tests of ESR dampers and PSR dampers will be performed that demonstrate the capability of the damper to operate under its design conditions.	4.a.i A report exists and concludes that each ESR damper or PSR damper changes position as indicated in Table 2.7.3.5-1 under design conditions.
	4.a.ii Test, analyses, or a combination of test and analyses of the as-built ESR dampers and PSR dampers will be performed under pre-operational test conditions.	4.a.ii Upon receipt of the actuating signal, each ESR damper or PSR damper changes positions as indicated in Table 2.7.3.5-1 under pre-operation test conditions.
	4.a.iii Tests of the as-built tornado dampers will be performed under pre-operational test conditions.	4.a.iii Each tornado damper changes position as indicated in Table 2.7.3.5-1 under pre-operational test conditions.

Table 2.7.3.5-3 (4 of 8)

Design Commitment		Inspections, Tests, Analyses		Acceptance Criteria	
4.b	After loss of motive power, ESR dampers and PSR dampers identified in Table 2.7.3.5-1 assume the indicated loss of motive power position.	4.b	Tests of the as-built ESR dampers and PSR dampers identified will be performed under the conditions of loss of motive power.	4.b	Upon loss of motive power, each as-built ESR damper or PSR damper identified in Table 2.7.3.5-1 assumes the indicated loss of motive power position.
5.a	Controls exist in the MCR to start and stop the ACUs, AHUs and cubicle coolers, and to open and close ESR dampers and PSR dampers identified in Table 2.7.3.5-1.	5.a	Tests of the ACUs, AHUs, cubicle coolers, ESR dampers, and PSR dampers will be performed using the controls in the MCR to start and stop the ACUs, AHUs and cubicle coolers, and to open and close ESR dampers and PSR dampers.	5.a	Controls in the as-built MCR start and stop the ACUs, AHUs and cubicle coolers, and open and close ESR dampers and PSR dampers identified in Table 2.7.3.5-1.
5.b	Controls exist in the RSR to start and stop the ACUs, AHUs and cubicle coolers, and to open and close ESR dampers and PSR dampers identified in Table 2.7.3.5-1.	5.b	Tests of the ACUs, AHUs, cubicle coolers, ESR dampers, and PSR dampers will be performed using the controls in the RSR to start and stop the ACUs, AHUs and cubicle coolers, and to open and close ESR dampers and PSR dampers.	5.b	Controls in the as-built RSR start and stop the ACUs, AHUs and cubicle coolers, and open and close ESR dampers and PSR dampers identified in Table 2.7.3.5-1.
5.c	Displays and alarms exist and are retrievable in the MCR as defined in Table 2.7.3.5-2.	5.c	Inspections of the as-built displays and alarms in the MCR will be performed.	5.c	Displays and alarms exist and are retrieved in the as-built MCR as defined in Table 2.7.3.5-2.
5.d	Displays and alarms exist and are retrievable in the RSR as defined in Table 2.7.3.5-2.	5.d	Inspections of the as-built displays and alarms in the RSR will be performed.	5.d	Displays and alarms exist and are retrieved in the as-built RSR as defined in Table 2.7.3.5-2.
6.a	Each mechanical division of the emergency diesel generator area HVAC system (A, B, C & D) is physically separated from the other divisions.	6.a	Inspection of the as-built mechanical divisions will be performed.	6.a	Each mechanical divisions of the emergency diesel generator area HVAC system is physically separated by a divisional wall that is a 3-hour rated fire barrier.

Table 2.7.3.5-3 (5 of 8)

Design Commitment		Inspections, Tests, Analyses		Acceptance Criteria	
6.b	The two mechanical divisions of the electrical and I&C equipment areas HVAC system (A/C & B/D) are physically separated.	6.b	Inspection of the as-built mechanical divisions will be performed.	6.b	The two mechanical divisions of the electrical and I&C equipment areas HVAC system are physically separated by a divisional wall that is a 3-hour rated fire barrier.
6.c	The two mechanical divisions of the auxiliary building controlled area HVAC system (A/C & B/D) are physically separated.	6.c	Inspection of the as-built mechanical divisions will be performed.	6.c	The two mechanical divisions of the auxiliary building controlled areas HVAC system are physically separated by a divisional wall that is a 3-hour rated fire barrier.
7.a	The emergency diesel generator area HVAC system provides conditioned air that is required to maintain the room temperature within the design limits for the emergency diesel generator area during plant normal, abnormal and accident conditions.	7.a	Tests and analyses of the as-built emergency diesel generator area HVAC system will be performed.	7.a	A report exists and concludes that the as-built emergency diesel generator area HVAC system is capable of providing conditioned air to maintain the room temperature within the design limits for the emergency diesel generator area during plant normal, abnormal and accident conditions.
7.b	The electrical and I&C equipment areas HVAC system provides conditioned air that is required to maintain the room temperature within the design limits for the electrical and I&C equipment areas except non-safety-related equipment rooms during plant normal, abnormal and accident conditions.	7.b	Tests and analyses of the as-built electrical and I&C equipment areas HVAC system will be performed.	7.b	A report exists and concludes that the as-built electrical and I&C equipment areas HVAC system is capable of providing conditioned air to maintain the room temperature within the design limits for the electrical and I&C equipment areas except non-safety-related equipment rooms during plant normal, abnormal and accident conditions.

Table 2.7.3.5-3 (6 of 8)

Design Commitment	Inspections, Tests, Analyses	Acceptance Criteria
7.c The auxiliary building controlled area HVAC system provides conditioned air that is required to maintain the room temperature within the design limits for the safety-related rooms in the auxiliary building controlled area during plant normal, abnormal and accident conditions.	7.c Tests and analyses of the as-built auxiliary building controlled area HVAC system will be performed.	7.c A report exists and concludes that the as-built auxiliary building controlled area HVAC system is capable of providing conditioned air to maintain the room temperature within the design limits for the safety-related rooms in the auxiliary building controlled area during plant normal, abnormal and accident conditions.
8. The emergency diesel generator area HVAC system, the electrical and I&C equipment areas HVAC system and the auxiliary building controlled area HVAC system cubicle cooler fans identified in Table 2.7.3.5-1 operate automatically according to room temperature signal.	8. Tests of the as-built emergency diesel generator area HVAC system, electrical and I&C equipment areas HVAC system and auxiliary building controlled area HVAC system cubicle cooler fans will be performed using a simulated signal.	8. The as-built emergency diesel generator area HVAC system, electrical and I&C equipment areas HVAC system and auxiliary building controlled area HVAC system cubicle cooler fans identified in Table 2.7.3.5-1 operate automatically according to room temperature signal.
9. The auxiliary building controlled area emergency exhaust ACU removes particulate matter and iodine and provides a negative pressure.	9.a Testing and analysis will be performed for each ACU filter to determine filter efficiencies.	9.a A report exists and concludes that ACU filter efficiencies are equal to or greater than 99 % for all forms of iodine, and greater than or equal to 99 % for particulate matter greater than 0.3 micron.
	9.b Tests will be performed on the capability of each ACU to provide a negative pressure.	9.b A test report exists and concludes that the auxiliary building controlled area emergency exhaust ACU provides a negative pressure of at least -6.35 mm (-0.25 inch) water gauge with respect to the adjacent areas within 300 seconds in each division.

Table 2.7.3.5-3 (7 of 8)

Design Commitment	Inspections, Tests, Analyses	Acceptance Criteria
10. The auxiliary building controlled area emergency exhaust ACUs start and the auxiliary building controlled area supply AHU outlet isolation dampers and the auxiliary building controlled area normal exhaust ACU inlet isolation dampers close upon receipt of an ESFAS-SIAS.	10. Tests of the as-built auxiliary building controlled area emergency exhaust ACUs, the auxiliary building controlled area supply AHU outlet isolation dampers, and the auxiliary building controlled area normal exhaust ACU inlet isolation dampers will be performed using a simulated ESFAS-SIAS.	10. The as-built auxiliary building controlled area emergency exhaust ACUs start and the as-built auxiliary building controlled area supply AHU outlet isolation dampers and the auxiliary building controlled area normal exhaust ACU inlet isolation dampers close upon receipt of a simulated ESFAS-SIAS.
11. The electrical and I&C equipment areas HVAC system provides battery room ventilation that is required to maintain hydrogen concentration within the design limit during plant normal, abnormal and accident conditions.	11. Tests and analyses of the as-built electrical and I&C equipment areas HVAC system will be performed.	11. A report exists and concludes that the as-built electrical and I&C equipment areas HVAC system is capable of providing battery room ventilation in order to maintain hydrogen concentration below 1 % by battery room volume during plant normal operations, abnormal and accident conditions.
12.a The fire dampers are installed in the fire rated barriers and have the same fire resistance rating as the barrier.	12.a Type tests, tests, a combination of type tests and analyses, or a combination of tests and analyses of fire damper rating will be performed.	12.a A report exists and concludes that the fire dampers that penetrate the fire barriers have the same fire resistance rating as the barrier.
12.b The fire dampers which are required to protect safety shutdown capability close under design air flow condition.	12.b Type tests, tests, a combination of type tests and analyses, or a combination of tests and analyses of fire damper closing will be performed under design air flow condition.	12.b A report exists and concludes that the fire dampers which are required to protect safety shutdown capability close under the design air flow condition.

Table 2.7.3.5-3 (8 of 8)

Design Commitment	Inspections, Tests, Analyses	Acceptance Criteria
12.c HVAC ducts that penetrate fire barriers have fire dampers in the HVAC ducts.	12.c An inspection will be performed to verify that fire dampers are installed in the as-built HVAC ducts that penetrate the fire barriers.	12.c Fire dampers are installed in the as-built HVAC ducts that penetrate the fire barriers.
13. The auxiliary building controlled area HVAC system has exhaust airflow rate greater than supply airflow rate to control the release of potential airborne radioactive materials from the auxiliary building controlled area during plant normal condition.	13. Tests of the as-built auxiliary building controlled area HVAC system will be performed.	13. A report exists and concludes that the as-built auxiliary building controlled area HVAC system provides design exhaust airflow rate that is greater than design supply airflow rate during plant normal condition.
14. The auxiliary building controlled area HVAC system non-metallic parts, materials, and lubricants used in safety-related mechanical equipment perform their safety-related function up to the end of their qualified life in the design basis harsh environmental conditions (both internal service conditions and external environmental conditions) experienced during normal operations, anticipated operational occurrences, design-basis accidents, and post accident conditions.	14. A type test or a combination of type test and analysis will be performed on the containment air radiation monitor non-metallic parts, materials, and lubricants used in safety-related mechanical equipment.	14. A report exists and concludes that the containment air radiation monitor non-metallic parts, materials, and lubricants used in safety-related mechanical equipment perform their safety-related function up to the end of their qualified life under the design basis harsh environmental conditions (both internal service conditions and external environmental conditions) experienced during normal operations, anticipated operational occurrences, design-basis accidents, and post accident conditions.

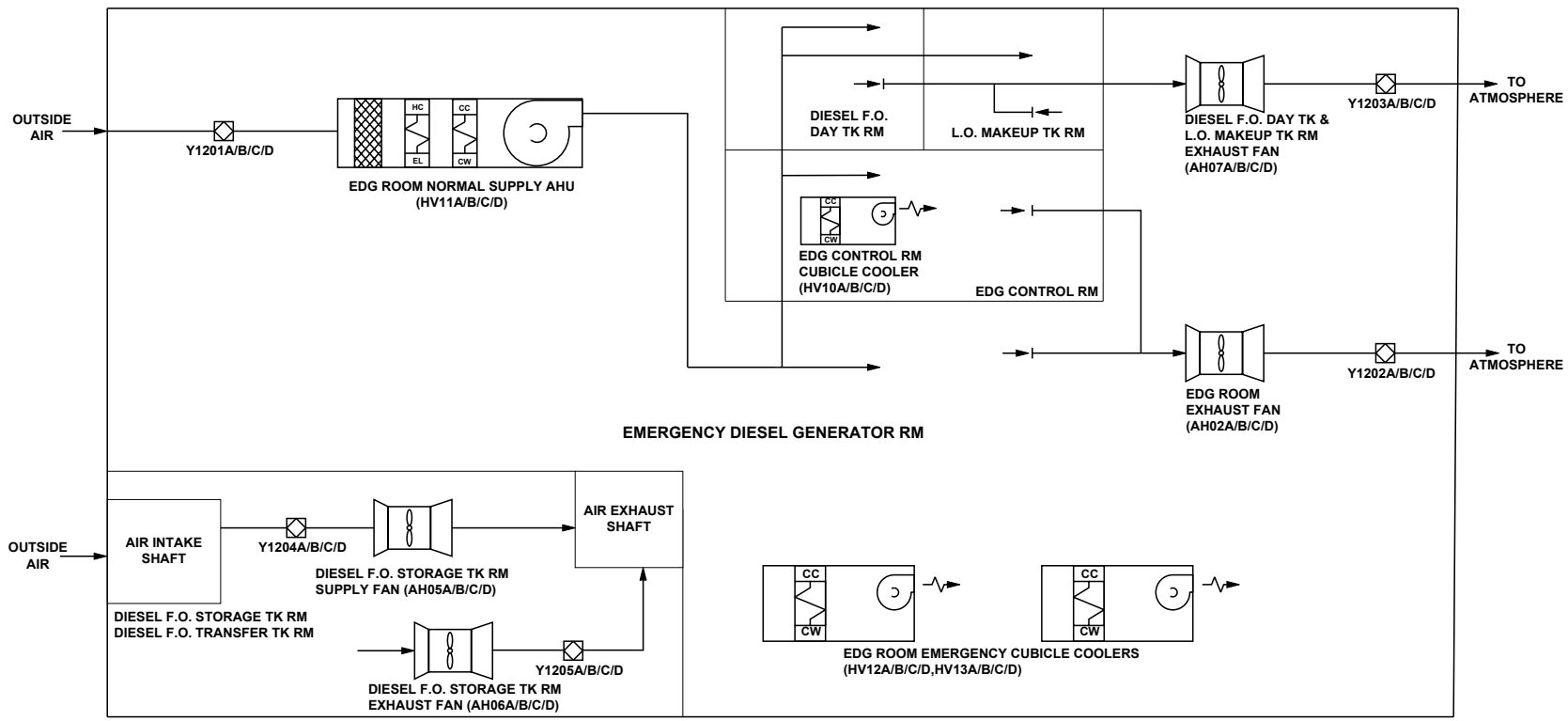

Figure 2.7.3.5-1 Emergency Diesel Generator Area HVAC System

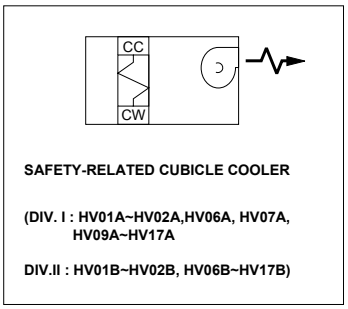

SAFETY-RELATED ELECTRICAL AND I&C EQUIPMENT AREAS (I/II) HVAC SUBSYSTEM

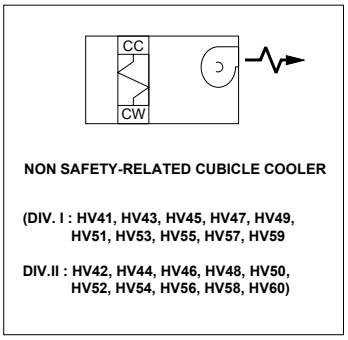

NON SAFETY-RELATED ELECTRICAL AND I&C EQUIPMENT AREAS (I/II) HVAC SUBSYSTEM

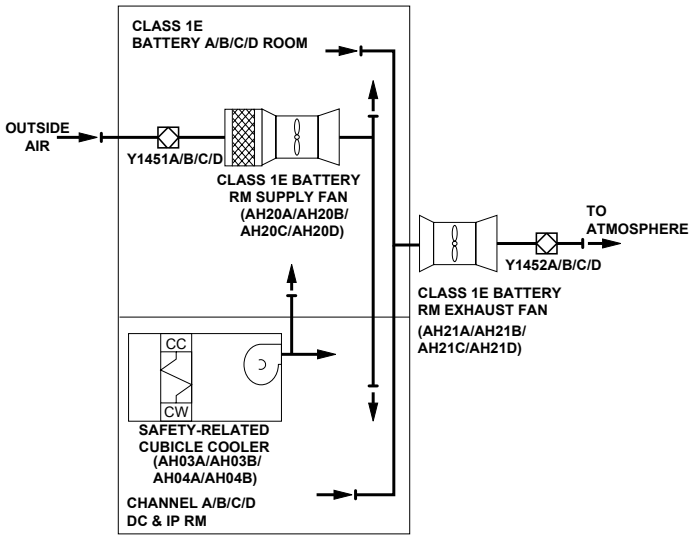

CLASS 1E BATTERY ROOM (A/B/C/D) HVAC SUBSYSTEM

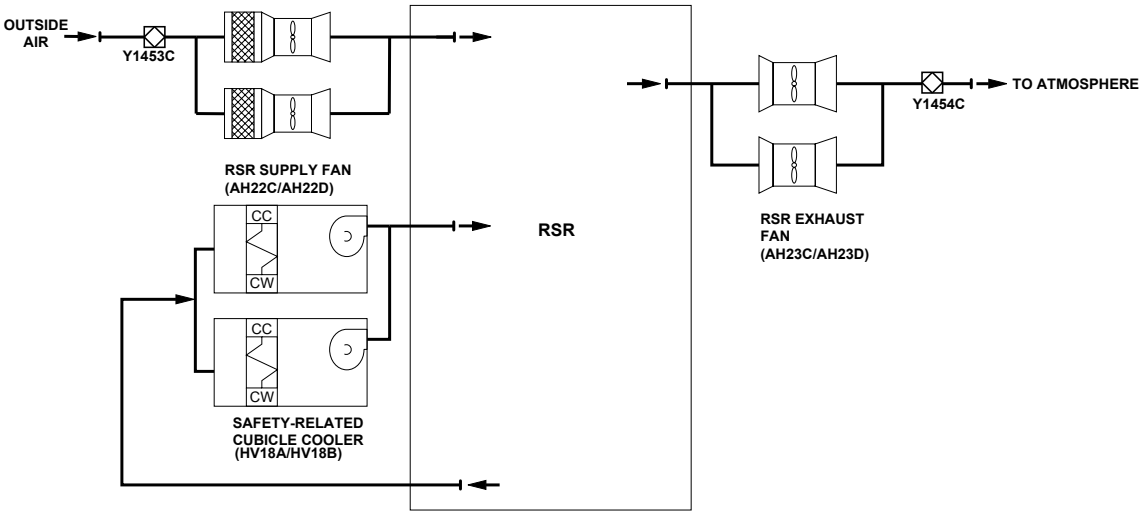

REMOTE SHUTDOWN ROOM (RSR) HVAC SUBSYSTEM

Figure 2.7.3.5-2 Electrical and I&C Equipment Areas HVAC System

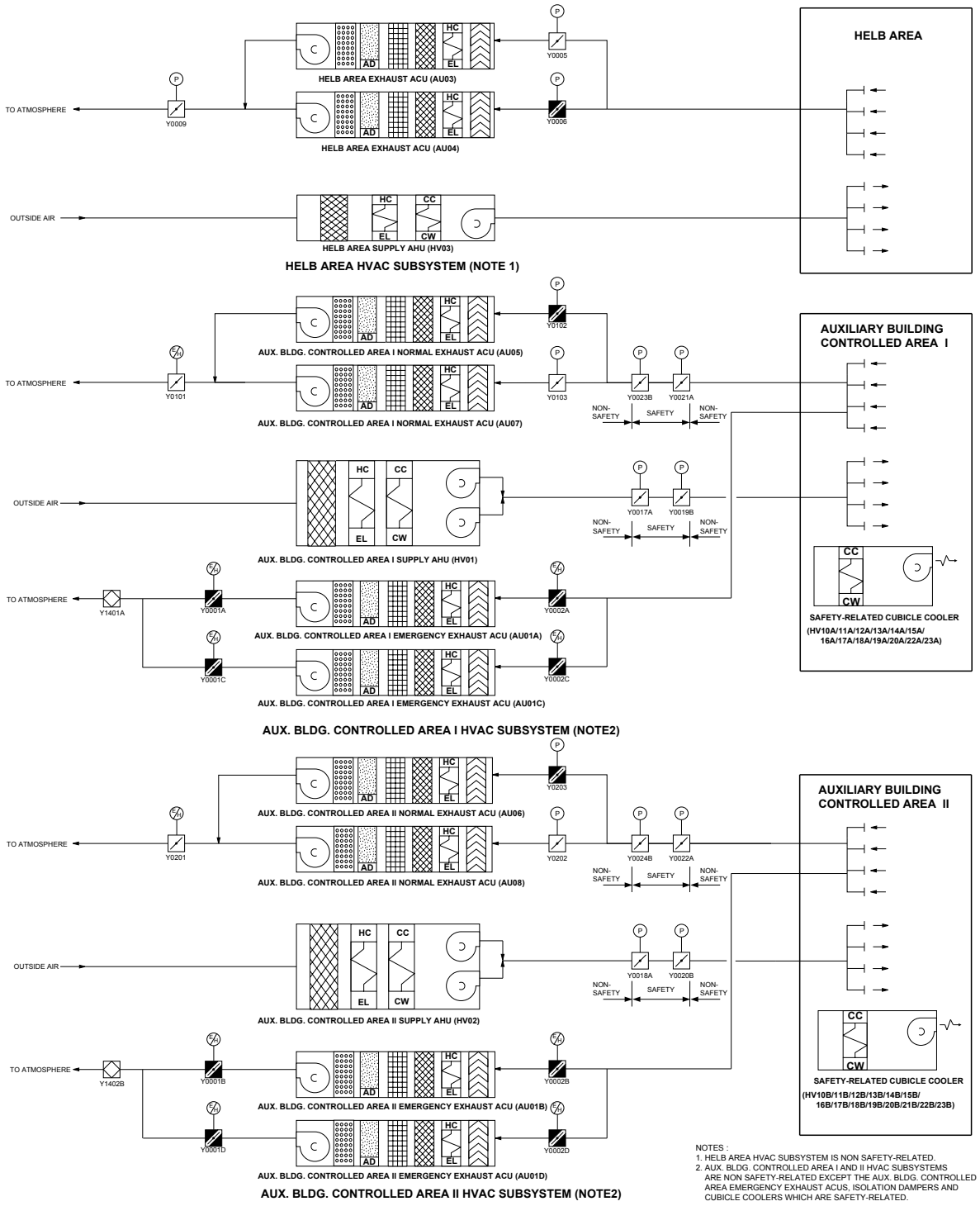

Figure 2.7.3.5-3 Auxiliary Building Controlled Area HVAC System

2.7.3.6 Reactor Containment Building HVAC System and Reactor Containment Building Purge System

2.7.3.6.1 Design Description

2.7.3.6.1.1 Reactor Containment Building HVAC System

The reactor containment building HVAC system is a non-safety-related system that provides cooling and air recirculation in the containment.

The reactor containment building HVAC system consists of reactor containment building cooling subsystem, reactor cavity cooling subsystem, and CEDM cooling subsystem.

The reactor containment building cooling subsystem cools and recirculates air inside the containment.

The reactor cavity cooling subsystem provides cooled air to the concrete surrounding the reactor.

The CEDM cooling subsystem maintains the temperature of the CEDM coils.

2.7.3.6.1.2 Reactor Containment Building Purge System

The reactor containment building purge system is a non-safety-related system, with the exception of containment isolation valves (CIVs) and the piping between the CIVs that are safety-related, ASME Section III Class 2 and seismic Category I as described in Subsection 2.11.3. The reactor containment building purge system performs the containment isolation function for the piping penetrating the containment.

The reactor containment building purge system provides containment pressure relief, reduces air borne radioactivity, and maintains environmental condition within the containment. The reactor containment building purge system is located in the auxiliary building and the containment building.

The reactor containment building purge system is divided into low volume purge subsystem, and high volume purge subsystem.

The high volume purge subsystem consists of one 100 percent capacity supply AHU and two 50 percent capacity exhaust ACUs, CIVs, ductwork, instrumentation and controls.

The high volume purge subsystem reduces airborne radioactivity and maintains environmental conditions within the containment to entry for maintenance or inspections during cold shutdown and refueling conditions.

The low volume purge subsystem consists of two 100 percent capacity supply fans and two 100 percent capacity exhaust ACUs, CIVs, ductwork, instrumentation and controls. The low volume purge subsystem controls the containment atmosphere pressure and removes gaseous and particulate contamination from the containment atmosphere during plant normal condition, when required.

The reactor containment building HVAC system and reactor containment building purge system are designed as follows:

1. The functional arrangement of the reactor containment building HVAC system and reactor containment building purge system are as described in the Design Description of Subsections 2.7.3.6.1.1 and 2.7.3.6.1.2.

2.a The fire dampers are installed in the fire rated barriers and have the same fire resistance rating as the barrier.

2.b The fire dampers which are required to protect safety shutdown capability close under design air flow condition.

2.c HVAC ducts that penetrate fire barriers have fire dampers in the HVAC ducts.

2.7.3.6.2 Inspections, Tests, Analyses, and Acceptance Criteria

Table 2.7.3.6-1 specifies the inspections, tests, analyses, and associated acceptance criteria for the reactor containment building HVAC system and reactor containment building purge system.

The ITAAC related to CIVs and piping penetrating the containment of the reactor containment building purge system are described in Table 2.11.3-2.

Table 2.7.3.6-1

Reactor Containment Building HVAC System and
Reactor Containment Building Purge System ITAAC

Design Commitment	Inspections, Tests, Analyses	Acceptance Criteria
1. The functional arrangement of the reactor containment building HVAC system and reactor containment building purge system are as described in the Design Description of Subsections 2.7.3.6.1.1 and 2.7.3.6.1.2.	1. Inspection of the as-built system will be conducted.	1. The as-built reactor containment building HVAC system and reactor containment building purge system conforms with the functional arrangement as described in the Design Description of Subsections 2.7.3.6.1.1 and 2.7.3.6.1.2.
2.a The fire dampers are installed in the fire rated barriers and have the same fire resistance rating as the barrier.	2.a Type tests, tests, a combination of type tests and analyses, or a combination of tests and analyses of fire damper rating will be performed.	2.a A report exists and concludes that the fire dampers that penetrate the fire barriers have the same fire resistance rating as the barrier.
2.b The fire dampers which are required to protect safety shutdown capability close under design air flow condition.	2.b Type tests, tests, a combination of type tests and analyses, or a combination of tests and analyses of fire damper closing will be performed under design air flow condition.	2.b A report exists and concludes that the fire dampers which are required to protect safety shutdown capability close under the design air flow condition.
2.c HVAC ducts that penetrate fire barriers have fire dampers in the HVAC ducts.	2.c An inspection will be performed to verify that fire dampers are installed in the as-built HVAC ducts that penetrate the fire barriers.	2.c Fire dampers are installed in the as-built HVAC ducts that penetrate the fire barriers.

2.7.3.7 Compound Building HVAC System

No entry for this system.

2.7.4 New and Spent Fuel Handling System

2.7.4.1 New Fuel Storage

2.7.4.1.1 Design Description

The new fuel storage racks are non-safety-related, but treated as safety-related components in accordance with the quality assurance of the 10 CFR 50 Appendix B. In addition, the racks are designed as seismic Category I for integrity of the new fuel assemblies. The new fuel storage racks provide on-site dry storage for nuclear fuel assemblies. The new fuel storage racks are located in the new fuel storage pit in the fuel handling area of the auxiliary building. A drain system with a provision preventing backflow from other drains is included in the new fuel storage pit and curbs are installed around the top edge of the pit for preventing the water in-flow in the event of flooding in the adjacent fuel handling areas. It is designed that non-seismic Category I component located near the area of NFSP will not impact NFSP racks and stored fuel due to its failure during SSE.

The new fuel storage racks are designed and constructed to accommodate design basis load and load combinations including impact due to postulated fuel handling accidents in a sub-critical configuration. The racks are also designed and constructed to prevent tipping of the racks in the event of an SSE earthquake by means of fixation to the floor.

The new fuel storage racks are designed and constructed to maintain a K_{eff} no greater than 0.95 under fully flooded conditions and no greater than 0.98 under optimum moderation conditions at a 95 percent probability with 95 percent confidence level in accordance with 10 CFR 50.68.

1. The functional arrangement of the new fuel storage facility including the new fuel storage racks is as described in the Design Description of Subsection 2.7.4.1.1.

2. The new fuel storage racks maintain the effective multiplication factor, K_{eff}, less than or equal to the regulatory limits in 10 CFR 50.68 during normal operation and the postulated accident conditions.

2.7.4.1.2 Inspections, Tests, Analyses, and Acceptance Criteria

Table 2.7.4.1-1 specifies the inspections, tests, analyses, and associated acceptance criteria for the new fuel storage racks.

Table 2.7.4.1-1

New Fuel Storage ITAAC

Design Commitment	Inspections, Tests, Analyses	Acceptance Criteria
1. The functional arrangement of the new fuel storage facility including the new fuel storage racks is as described in the Design Description of Subsection 2.7.4.1.1.	1. Inspection of the as-built new fuel storage facility will be performed.	1. The as-built new fuel storage facility conforms with the functional arrangement as described in the Design Description of Subsection 2.7.4.1.1 including; - Anti-flooding provisions with drain feature - Anti-tipping provisions with anchor bolt design - Non-seismic Category I component around the pit and racks will not impact NFSP racks and stored fuel due to its failure during SSE
2. The new fuel storage racks maintain the effective multiplication factor, K_{eff}, less than or equal to the regulatory limits in 10 CFR 50.68 during normal operation and the postulated accident conditions.	2.a Inspection of the as-built new fuel storage racks will be performed.	2.a The as-built new fuel storage rack dimensions including the center-to-center spacing, the rack-to-rack spacing and the rack-to-wall spacing are consistent with the design values for dimensions and their tolerances used in the criticality analysis and the mechanical analysis.
	2.b Inspections will be performed to verify that the materials of the as-built new fuel storage racks conform with the criticality analysis of the new fuel storage racks.	2.b The materials of the as- built new fuel storage racks conform with the criticality analysis of the new fuel storage racks.

2.7.4.2 Spent Fuel Storage

2.7.4.2.1 Design Description

The function of spent fuel facility is to store spent fuel in the spent fuel pool of the auxiliary building, which is seismic Category I. The spent fuel pool is designed to have sufficient dimensions to maintain the proper water level and volume for spent fuel cooling and radiation shielding. The spent fuel pool liner plate is classified as seismic Category I. The liner plate is fabricated from stainless steel material and utilizes a welded construction for minimizing potential leakage. A liner leakage collection system is provided to collect possible leakage from liner plate welds on the pool walls and floor.

The spent fuel storage racks are non-safety-related, but treated as safety-related components in accordance with the quality assurance of the 10 CFR 50 Appendix B. In addition, the racks are designed as seismic Category I for integrity of the spent fuel assemblies. The spent fuel storage racks provide on-site storage capability for a core offload during the design life. The spent fuel storage racks are located in the spent fuel pool. The spent fuel pool has no opening, gate, drain, or connection below the top of the stored fuel. The spent fuel pool gates for transferring fuel to the adjacent fuel handling area are seismic Category I. The gates are designed to minimize potential leakage and withstand the water pressure in the spent fuel pool. The water level in the spent fuel pool remains 3 m (10 ft) above the top of fuel assemblies in the event of a single gate failure. All piping penetrating the spent fuel pool are located at least 3 m (10 ft) or more above the top of irradiated fuel assemblies seated in the storage racks, and all piping extending down into the spent fuel pool have siphon breaker holes installed on the piping inside the spent fuel pool at or above this level. The spent fuel pool water level shall be 7 m (23 ft) over the top of irradiated fuel assemblies seated in the storage racks. It is designed that non-seismic Category I component located near the area of SFP will not impact SFP safety-related SSC, the racks, or stored fuel due to its failure during SSE.

The spent fuel storage racks are designed and constructed to accommodate design basis load and load combinations including impact due to postulated fuel handling accidents in a subcritical configuration.

The spent fuel storage racks are designed and constructed to maintain a K_{eff} no greater than 0.95, at a 95 percent probability, 95 percent confidence level (95/95level), if flooded with

borated water, and a K_{eff} of less than 1.0, at a 95/95 level, if flooded with unborated water in accordance with 10 CFR 50.68.

1. The functional arrangement of the spent fuel storage facility including the spent fuel pool liner plate, gates and racks is as described in the Design Description of Subsection 2.7.4.2.1.

2. The spent fuel storage racks maintain the effective multiplication factor, K_{eff}, less than or equal to the regulatory limits in 10 CFR 50.68 during normal operation and the postulated accident conditions.

2.7.4.2.2 Inspections, Tests, Analyses, and Acceptance Criteria

Table 2.7.4.2-1 specifies the inspections, tests, analyses, and associated acceptance criteria for the spent fuel storage racks.

Table 2.7.4.2-1

Spent Fuel Storage ITAAC

Design Commitment	Inspections, Tests, Analyses	Acceptance Criteria
1. The functional arrangement of the spent fuel storage facility including the spent fuel pool liner plate, gates and racks is as described in the Design Description of Subsection 2.7.4.2.1.	1. Inspection of the as-built spent fuel storage facility will be performed.	1. The as-built spent fuel storage facility conform with the functional arrangement as described in the Design Description of Subsection 2.7.4.2.1 including; - Non-seismic Category I component around the pool and racks will not impact SFP safety-related SSC, the racks, or stored fuel due to its failure during SSE - Spent fuel pool configuration including; ・ locations and elevations of as-built pipes, gates, drains, openings, and anti-siphon devices in the SFP ・ dimensions of as-built SFP
2. The spent fuel storage racks maintain the effective multiplication factor, K_{eff}, less than or equal to the regulatory limits in 10 CFR 50.68 during normal operation and the postulated accident conditions.	2.a Inspection of the as-built spent fuel storage racks will be performed.	2.a The as-built spent fuel storage rack dimensions including the center-to-center spacing, the rack-to-rack spacing and the rack-to-wall spacing are consistent with the design values for dimensions including their tolerances used in the criticality analysis and the mechanical analysis.
	2.b Inspections will be performed to verify that the materials of the as-built spent fuel storage racks conform with the criticality analysis of the spent fuel storage racks.	2.b The materials including the neutron absorbing material of the as-built spent fuel storage racks and their tolerances conform with the criticality analysis of the spent fuel storage racks.

2.7.4.3 Spent Fuel Pool Cooling and Cleanup System

2.7.4.3.1 Design Description

The spent fuel pool (SFP) cooling system removes heat generated by the stored spent fuel assemblies in the spent fuel pool water. The SFP cleanup system purifies spent fuel pool water, refueling pool water, IRWST water, and fuel transfer canal water through filters and ion exchangers. The spent fuel pool cooling and cleanup system (SFPCCS) performs safety-related functions to maintain the SFP water temperature within limits and preserve containment integrity by isolation of the SFPCCSs lines penetrating the containment. The SFP cooling system (SFPCS) is safety-related and the SFP cleanup system is non-safety-related. The SFPCCS consists of a SFP cooling system and cleanup system. The SFPCCS is located in the auxiliary building.

To meet above functional requirements, the SFPCCS is designed as follows:

1. The functional arrangement of the SFPCCS is as described in the Design Description of Subsection 2.7.4.3.1 and in Table 2.7.4.3-1 and as shown in Figure 2.7.4.3-1.

2.a The ASME Code components identified in Table 2.7.4.3-2 are designed and constructed in accordance with ASME Section III requirements.

2.b The ASME Code piping, including supports, identified in Table 2.7.4.3-1 is designed and constructed in accordance with ASME Section III requirements.

3.a Pressure boundary welds in ASME Code components identified in Table 2.7.4.3-2 meet ASME Section III requirements.

3.b Pressure boundary welds in ASME Code piping identified in Table 2.7.4.3-1 meet ASME Section III requirements.

4.a The ASME Code components identified in Table 2.7.4.3-2 retain their pressure boundary integrity at their design pressure.

4.b The ASME Code piping identified in Table 2.7.4.3-1 retains its pressure boundary integrity at its design pressure.

5.a The seismic Category I components and instruments identified in Tables 2.7.4.3-2 and 2.7.4.3-3, including the supports and anchorages, withstand seismic design basis loads without loss of safety function.

5.b The seismic Category I piping, including supports, identified in Table 2.7.4.3-1 withstands seismic design basis loads without loss of safety function.

6.a The Class 1E components and instruments identified in Tables 2.7.4.3-2 and 2.7.4.3-3 as being qualified for a harsh environment (and the associated wiring, cables, and terminations) withstand the environmental conditions that would exist before, during, and following a design basis accident without loss of safety function for the time required to perform the safety function.

6.b Each of the Class 1E components and instruments identified in Tables 2.7.4.3-2 and 2.7.4.3-3 is powered from its respective Class 1E division.

6.c Physical separation and electrical isolation are provided (1) between Class 1E divisions, and (2) between Class 1E divisions and non-Class 1E divisions.

7. Check valves identified in Table 2.7.4.3-2 perform an active safety function to change position as indicated in the table.

8.a Controls exist in the MCR to start and stop the SFP cooling pumps identified in Table 2.7.4.3-2.

8.b Controls exist in the RSR to start and stop the SFP cooling pumps identified in Table 2.7.4.3-2.

8.c Displays and alarms exist and are retrievable in the MCR as defined in Tables 2.7.4.3-2 and 2.7.4.3-3.

8.d Displays and alarms exist and are retrievable in the RSR as defined in Tables 2.7.4.3-2 and 2.7.4.3-3.

9. The two mechanical divisions of the SFPCS are physically separated except for the cross-connect line between SFP cooling pump suction, discharge lines.

10. The SFPCCS provides heat removal capacity to remove the decay heat generated by spent fuel assemblies.

11. The SFPCCS safety-related pumps are functionally designed and qualified to perform their safety-related function under the full range of fluid flow, differential pressure, electrical, and temperature conditions up to and including design basis accident conditions.

12. The SFP cooling pumps have sufficient net positive suction head (NPSH).

13. Spent fuel pool liner leak detection design provides visual indication of liner leak.

2.7.4.3.2 Inspections, Tests, Analyses, and Acceptance Criteria

The inspections, tests, analyses, and associated acceptance criteria for the SFPCCS are specified in Table 2.7.4.3-4.

The ITAAC related to the CIVs and the piping between CIVs of the SFPCCS are described in Table 2.11.3-2.

Table 2.7.4.3-1

Spent Fuel Pool Cooling and Cleanup System Equipment and Piping Location/Characteristics

Equipment and Piping Name	Location	ASME Section III Class	Seismic Category
SFP cooling piping from SFP cooling suction to discharge and including the following equipment and valves : FC-PP01A/B, FC-HE02A/B and FC-1005,1006	Auxiliary Building	3	I
SFPCCSs piping penetrating the reactor containment up to isolation valves and including the following valves : FC-1142, 1145 and FC-1143, 1144	Reactor Containment Building/ Auxiliary Building	2	I
SFP cleanup piping from each cleanup suction to discharge excluding piping of containment isolation	Reactor Containment Building/ Auxiliary Building	-	II
SFP external makeup and spray piping including the following valves : FC-2601, 2605, 2611, 2615	Auxiliary Building	-	I

(1) Dash(-) indicates not applicable.

Table 2.7.4.3-2

Spent Fuel Pool Cooling and Cleanup System Components List

Component Name	Item No.	ASME Section III Class	Seismic Category	Class 1E/ Harsh Envir. Qual.	Display/ Control at MCR	Display/ Control at RSR	Control Signal	Active Safety Function	Loss of Motive Power Position
SFP Cooling Pump A, B	FC-PP01A, PP01B	3	I	Yes/No	Yes/Yes	Yes/Yes	Remote Manual	Start	-
							SFP Level Lo-Lo	stop	
SFP Cooling Heat Exchanger	FC-HE02A, HE02B	3	I	-/No	-	-	-	-	-
SFP Cooling Pump Discharge Line Check Valve	FC-1005, 1006	3	I	-/No	-	-	-	Open/ Closed	-
Containment Isolation Valve	FC-1145 (Check V/V)	2	I	-/No	-	-	-	Open/ Closed	-

(1) Dash(-) indicates not applicable.

Table 2.7.4.3-3

Spent Fuel Pool Cooling and Cleanup System Instruments List

Instrument Name	Item No.	Location	ASME Section III Class	Seismic Category	Class 1E/ Harsh Envir. Qual.	Display/ Alarm at MCR	Display/ Alarm at RSR
SFP Cooling Pump Discharge Flow	F-005, 006	Auxiliary Building	-	I	No/No	No/Yes	No/Yes
SFP Cooling Heat Exchanger Discharge Temperature	T-007A, 008B	Auxiliary Building	-	I	Yes/No	Yes/Yes	Yes/Yes
SFP Water Level	L-001A, 002B	Auxiliary Building	-	I	Yes/Yes	Yes/Yes	Yes/Yes
SFP Temperature	T-003B, 004A	Auxiliary Building	-	I	Yes/Yes	Yes/Yes	Yes/Yes

(1) Dash(-) indicates not applicable.

Table 2.7.4.3-4 (1 of 6)

Spent Fuel Pool Cooling and Cleanup System ITAAC

Design Commitment	Inspections, Tests, Analyses	Acceptance Criteria
1. The functional arrangement of the SFPCCS is as described in the Design Description of Subsection 2.7.4.3.1 and in Table 2.7.4.3-1 and as shown in Figure 2.7.4.3-1.	1. Inspection of the as-built SFPCCS will be performed.	1. The as-built SFPCCS conforms with the functional arrangement as described in the Design Description of Subsection 2.7.4.3.1 and in Table 2.7.4.3-1 and as shown in Figure 2.7.4.3-1.
2.a The ASME Code components identified in Table 2.7.4.3-2 are designed and constructed in accordance with ASME Section III requirements.	2.a Inspection of the as-built ASME Code components identified in Table 2.7.4.3-2 will be performed and documented in the ASME data report(s).	2.a The ASME Section III data report(s) exist and conclude that the as-built ASME Code components identified in Table 2.7.4.3-2 are designed and constructed in accordance with ASME Section III requirements.
2.b The ASME Code piping, including supports, identified in Table 2.7.4.3-1 is designed and constructed in accordance with ASME Section III requirements.	2.b Inspection of the as-built ASME Code piping, including supports, identified in Table 2.7.4.3-1 will be performed and documented in the ASME data report(s).	2.b The ASME Section III data report(s) exist and conclude that the as-built ASME Code piping, including supports, identified in Table 2.7.4.3-1 is designed and constructed in accordance with ASME Section III requirements.
3.a Pressure boundary welds in ASME Code components identified in Table 2.7.4.3-2 meet ASME Section III requirements.	3.a Inspections of the as-built pressure boundary welds in ASME Code components identified in Table 2.7.4.3-2 will be performed in accordance with the ASME Section III.	3.a A report exists and concludes that the ASME Section III requirements are met for non-destructive examination of the as-built pressure boundary welds in ASME Code components identified in Table 2.7.4.3-2.
3.b Pressure boundary welds in ASME Code piping identified in Table 2.7.4.3-1 meet ASME Section III requirements.	3.b Inspections of the as-built pressure boundary welds in ASME Code piping identified in Table 2.7.4.3-1 will be performed in accordance with the ASME Section III.	3.b A report exists and concludes that the ASME Section III requirements are met for non-destructive examination of the as-built pressure boundary welds in ASME Code piping identified in Table 2.7.4.3-1.

Table 2.7.4.3-4 (2 of 6)

Design Commitment	Inspections, Tests, Analyses	Acceptance Criteria
4.a The ASME Code components identified in Table 2.7.4.3-2 retain their pressure boundary integrity at their design pressure.	4.a A hydrostatic test will be conducted on the as-built ASME Code components identified in Table 2.7.4.3-2 required to be hydrostatically tested by the ASME Section III.	4.a A report exists and concludes that the results of the hydrostatic test of the as-built ASME Code components identified in Table 2.7.4.3-2 conform with ASME Section III requirements.
4.b The ASME Code piping identified in Table 2.7.4.3-1 retains its pressure boundary integrity at its design pressure.	4.b A hydrostatic test will be conducted on the as-built ASME Code piping identified in Table 2.7.4.3-1 required to be hydrostatically tested by the ASME Section III.	4.b A report exists and concludes that the results of the hydrostatic test of the as-built ASME Code piping identified in Table 2.7.4.3-1 conform with ASME Section III requirements.
5.a The seismic Category I components and instruments identified in Tables 2.7.4.3-2 and 2.7.4.3-3, including the supports and anchorages, can withstand seismic design basis loads without loss of safety function.	5.a.i Inspections will be performed to verify that the as-built seismic Category I components and instruments are located in the seismic Category I structure.	5.a.i The as-built seismic Category I components and instruments identified in Tables 2.7.4.3-2 and 2.7.4.3-3 are located in the seismic Category I structure.
	5.a.ii Type tests, analyses or a combination of type tests and analyses of seismic Category I components and instruments will be performed.	5.a.ii A report exists and concludes that the seismic Category I components and instruments identified in Tables 2.7.4.3-2 and 2.7.4.3-3 can withstand seismic design basis loads without loss of safety function.
	5.a.iii Inspections will be performed to verify that the as-built seismic Category I components and instruments, including the supports and anchorages, are seismically bounded by the tested or analyzed conditions.	5.a.iii A report exists and concludes that the as-built seismic Category I components and instruments identified in Tables 2.7.4.3-2 and 2.7.4.3-3, including the supports and anchorages, are seismically bounded by the tested or analyzed conditions.

Table 2.7.4.3-4 (3 of 6)

Design Commitment	Inspections, Tests, Analyses	Acceptance Criteria
5.b The seismic Category I piping, including supports, identified in Table 2.7.4.3-1 withstands seismic design basis loads without loss of safety function.	5.b.i Inspections will be performed to verify that the as-built seismic Category I piping, including supports, is located in the seismic Category I structure(s).	5.b.i The as-built seismic Category I piping, including supports, identified in Table 2.7.4.3-1 is located in the seismic Category I structure(s).
	5.b.ii Inspections and analyses of the as-built seismic Category I piping, including supports, will be performed.	5.b.ii A report exists and concludes that the as-built seismic Category I piping, including supports, identified in Table 2.7.4.3-1 withstands seismic design basis loads without loss of its safety function.
6.a The Class 1E components and instruments identified in Tables 2.7.4.3-2 and 2.7.4.3-3 as being qualified for a harsh environment (and the associated wiring, cables, and terminations) can withstand the environmental conditions that would exist before, during, and following a design basis accident without loss of safety function for the time required to perform the safety function.	6.a.i Type tests or a combination of type tests and analyses will be performed on Class 1E components and instruments located in a harsh environment.	6.a.i A report exists and concludes that the Class 1E components and instruments identified in Tables 2.7.4.3-2 and 2.7.4.3-3 as being qualified for a harsh environment can withstand the environmental conditions that would exist before, during, and following a design basis accident without loss of safety function for the time required to perform the safety function.
	6.a.ii Inspections will be performed on the as-built Class 1E components and instruments (and the associated wiring, cables, and terminations) located in a harsh environment.	6.a.ii A report exists and concludes that the as-built Class 1E components and instruments identified in Tables 2.7.4.3-2 and 2.7.4.3-3 as being qualified for a harsh environment (and the associated wiring, cables, and terminations) are bounded by type tests or a combination of type tests and analyses.

Table 2.7.4.3-4 (4 of 6)

Design Commitment		Inspections, Tests, Analyses		Acceptance Criteria	
6.b	Each of the Class 1E components and instruments identified in Tables 2.7.4.3-2 and 2.7.4.3-3 is powered from its respective Class 1E division.	6.b	Tests will be performed by providing a test signal in only one Class 1E division at a time.	6.b	The test signal exists at the Class 1E components and instruments identified in Tables 2.7.4.3-2 and 2.7.4.3-3 as being powered from the Class 1E division under test.
6.c	Physical separation and electrical isolation are provided (1) between Class 1E divisions, and (2) between Class 1E divisions and non-Class 1E divisions.	6.c	Inspection of the as-built Class 1E divisions will be performed.	6.c	Physical separation and electrical isolation exist in accordance with NRC RG 1.75 (1) between Class 1E divisions, and (2) between Class 1E divisions and non-Class 1E divisions.
7.	Check valves identified in Table 2.7.4.3-2 perform an active safety function to change position as indicated in the table.	7.	Tests of the as-built check valves will be performed under pre-operational test pressure, temperature, and fluid flow conditions.	7.	Each check valve changes position as indicated in Table 2.7.4.3-2 under pre-operational test pressure, temperature, and fluid flow conditions.
8.a	Controls exist in the MCR to start and stop the SFP cooling pumps identified in Table 2.7.4.3-2.	8.a	Tests will be performed using the controls in the MCR to start and stop the SFP cooling pumps.	8.a	Controls in the as-built MCR start and stop the SFP cooling pumps identified in Table 2.7.4.3-2.
8.b	Controls exist in the RSR to start and stop the SFP cooling pumps identified in Table 2.7.4.3-2.	8.b	Tests will be performed using the controls in the RSR to start and stop the SFP cooling pumps.	8.b	Controls in the as-built RSR start and stop the SFP cooling pumps identified in Table 2.7.4.3-2.
8.c	Displays and alarms exist and are retrievable in the MCR as defined in Tables 2.7.4.3-2 and 2.7.4.3-3.	8.c	Inspections of the as-built displays and alarms in the MCR will be performed.	8.c	Displays and alarms exist and are retrieved in the as-built MCR as defined in Tables 2.7.4.3-2 and 2.7.4.3-3.
8.d	Displays and alarms exist and are retrievable in the RSR as defined in Tables 2.7.4.3-2 and 2.7.4.3-3.	8.d	Inspections of the as-built displays and alarms in the RSR will be performed.	8.d	Displays and alarms exist and are retrieved in the as-built RSR as defined in Tables 2.7.4.3-2 and 2.7.4.3-3.

Table 2.7.4.3-4 (5 of 6)

Design Commitment	Inspections, Tests, Analyses	Acceptance Criteria
9. The two mechanical divisions of the SFPCS are physically separated except for the cross-connect line between SFP cooling pump suction, discharge lines.	9. Inspections of the as-built mechanical divisions will be performed.	9. The two mechanical divisions of the SFPCS are physically separated by a divisional wall that is a 3-hour rated fire barrier, or by spatial separation in the spent fuel pool, except or the cross-connect line between SFP cooling pump suction, discharge lines.
10. The SFPCCS provides heat removal capacity to remove the decay heat generated by spent fuel assemblies.	10.a An analysis will be performed to verify the heat removal capacity of the SFP cooling heat exchangers.	10.a A report exists and concludes that the product of the overall heat transfer coefficient (U) and the effective heat transfer area (A) of each SFP cooling heat exchanger is greater than or equal to 4.7×10^6 Btu/hr-°F.
	10.b Test will be performed on the as-built SFP cooling pumps to confirm that the SFP cooling pumps can provide the flow rate.	10.b Each as-built SFP cooling pump delivers a flow rate at least 4,000 gpm to each as-built SFP cooling heat exchanger.
11. The SFPCCS safety-related pumps are functionally designed and qualified to perform their safety-related function under the full range of fluid flow, differential pressure, electrical, and temperature conditions up to and including design basis accident conditions.	11. A type test or a combination of type test and analysis will be performed of the SFPCCS safety-related pumps.	11. A Functional Qualification Report performed in conformance to ASME QME-1, as accepted in Regulatory Guide 1.100, exists and concludes that the SFPCCS safety-related pumps listed in Table 2.7.4.3-2 are functionally designed and qualified to perform their safety-related function under the full range of fluid flow, differential pressure, electrical, and temperature conditions up to and including design basis accident conditions.

Table 2.7.4.3-4 (6 of 6)

Design Commitment	Inspections, Tests, Analyses	Acceptance Criteria
12. The SFP cooling pumps have sufficient net positive suction head (NPSH).	12. Test to measure the as-built SFP cooling pump suction pressure will be performed. Inspection and analysis to determine NPSH available to each pump will be performed based on test data and as-built data.	12. A report exists and concludes that the as-built calculated NPSH available exceeds each SFP cooling pump's required NPSH.
13. Spent fuel pool liner leak detection design provides visual indication of liner leak	13. Inspection of integrity of glass gauge to assure clarity and upstream valve position to facilitate liquid collection for leak detection.	13. A report concludes that the as-built leak detection is installed as designed; and leak detection glass gauge and valves are verified for clarity and open position to facilitate leakage inspection.

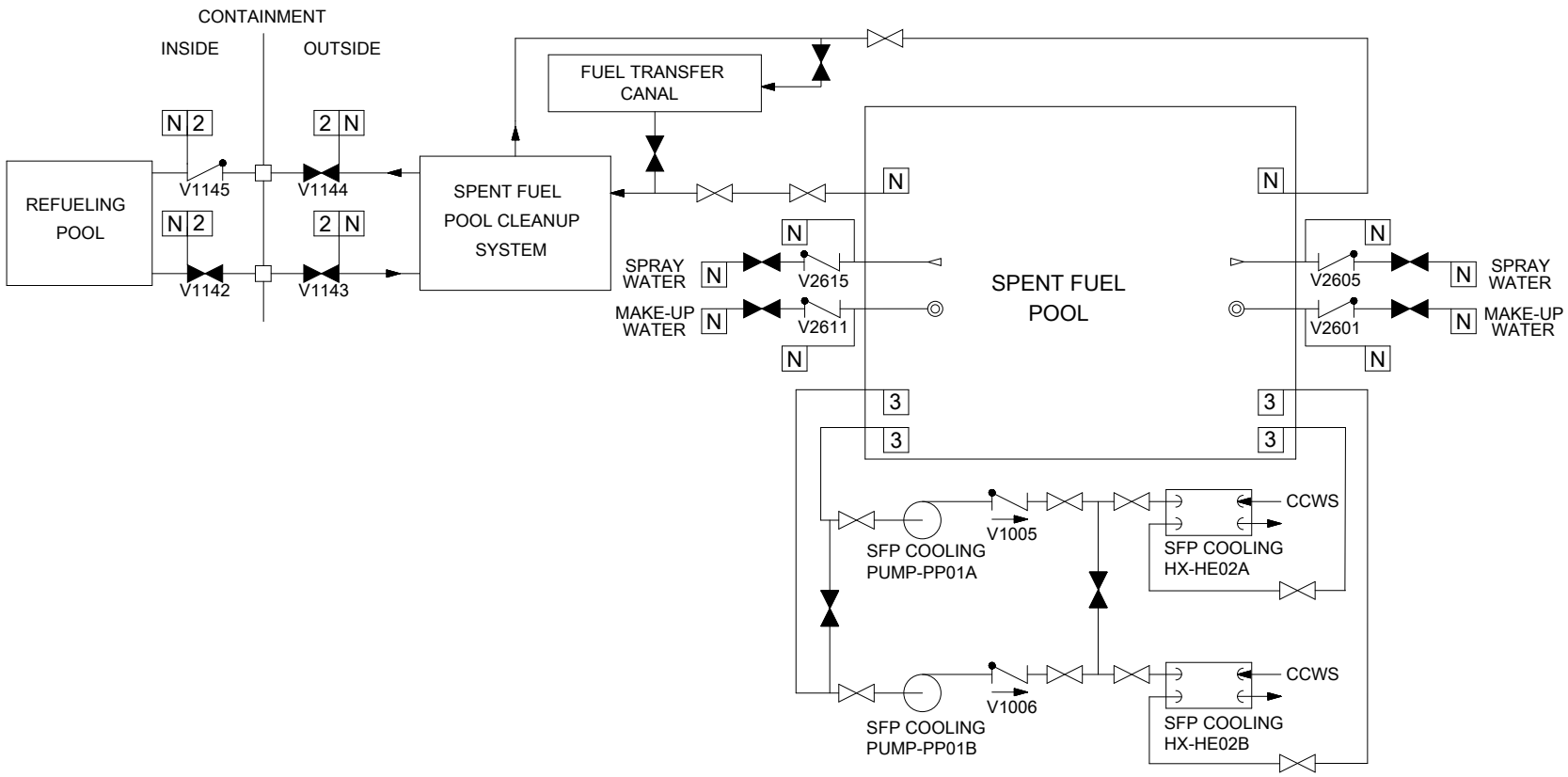

Figure 2.7.4.3-1 Spent Fuel Pool Cooling and Cleanup System

2.7.4.4 Light Load Handling System

2.7.4.4.1 Design Description

The light load handling system (LLHS) handles, moves and stores fuel assemblies and control element assemblies (CEAs) during fuel transfer operation. The LLHS load measuring devices are designed to reduce the potential for damage to a fuel assembly. All of the LLHS equipment are classified as non-nuclear safety with the single exception of the double blind flange assembly for transfer tube penetration sleeve. The LLHS has indicator lights on the control console to verify visually the operation status for the operator. Additionally, movement of the refueling machine (RM) and the spent fuel handling machine (SFHM) bridge is audibly signaled.

The RM, CEA change platform (CEACP) and CEA elevator (CEAE) are located in the reactor containment building. The SFHM, new fuel elevator (NFE) and fuel handling hoist of overhead crane are located in the fuel handling area of the auxiliary building. The fuel transfer system (FTS) is located in both the reactor containment building and the auxiliary building.

1. The functional arrangement of the LLHS is as described in the Design Description of Subsection 2.7.4.4.1 and in Table 2.7.4.4-1.

2. The ASME Code equipment identified in Table 2.7.4.4-1 is designed and constructed in accordance with ASME Section III requirements.

3. The ASME Code equipment identified in Table 2.7.4.4-1 retains its pressure boundary integrity at its design pressure.

4. The seismic Category I equipment identified in Table 2.7.4.4-1, including the supports and anchorages, withstands seismic design basis loads without loss of safety function.

5. The seismic Category II equipment identified in Table 2.7.4.4-1 retains structural integrity and does not impair the ability of a seismic Category I equipment to perform its design basis safety function during or following a safe shutdown earthquake (SSE).

6. The RM, SFHM and CEACP hoists are provided with load measuring devices and are interlocked to interrupt hoisting and lowering if load limits are reached.

7. The RM, SFHM and CEACP hoists are interlocked to limit upward hoist travel.

8. The RM, SFHM and CEACP hoists are provided with mechanical stops. The mechanical stops restrict withdrawal of the spent fuel assemblies or CEAs above the minimum safe water cover depth (9 ft). This, along with the shielding provided by the refueling equipment, ensures that an operator on the refueling platform is not exposed to the radiation dose limit of 2.5 mrem/hr when at the lower limit of the normal operating water level.

9. During a loss of electrical power to the RM or SFHM, the RM or SFHM does not drop the fuel assembly held by its hoist.

10. The new fuel elevator is interlocked to prevent from raising the elevator with a fuel assembly in the carriage assembly.

2.7.4.4.2 Inspections, Tests, Analyses, and Acceptance Criteria

Table 2.7.4.4-2 specifies the inspections, tests, analyses, and associated acceptance criteria for the LLHS.

Table 2.7.4.4-1

Light Load Handling System Equipment Location/Characteristics

Equipment Name	Location	ASME Section III Class	Seismic Category	Fuel Handling
Refueling Machine	Containment Building	NNS	II	Yes
CEA Change platform	Containment Building	NNS	II	No
CEA Elevator	Containment Building	NNS	II	No
Spent Fuel Handling Machine	Auxiliary Building	NNS	II	Yes
New Fuel Elevator	Auxiliary Building	NNS	II	Yes
Fuel Handling hoist of overhead crane	Auxiliary Building	NNS	II	Yes
Double blind flange assembly	Containment Building	2	I	No

No other equipment or locations will be used to store or handle fuel beyond the items listed Table 2.7.4.4-1.

Table 2.7.4.4-2 (1 of 3)

Light Load Handling System ITAAC

Design Commitment	Inspections, Tests, Analyses	Acceptance Criteria
1. The functional arrangement of the LLHS is as described in the Design Description of Subsection 2.7.4.4.1 and in Table 2.7.4.4-1.	1. Inspection of the as-built system will be conducted.	1. The as-built LLHS conforms with the functional arrangement as described in Design Description of Subsection 2.7.4.4.1 and in Table 2.7.4.4-1.
2. The ASME Code equipment identified in Table 2.7.4.4-1 is designed and constructed in accordance with ASME Section III requirements.	2. Inspection of the as-built ASME Code equipment identified in Table 2.7.4.4-1 will be performed and documented in the ASME design reports.	2. A report exists and concludes that the as-built ASME Code equipment identified in Table 2.7.4.4-1 is designed and constructed in accordance with ASME Section III requirements.
3. The ASME Code equipment identified in Table 2.7.4.4-1 retains its pressure boundary integrity at its design pressure.	3. A hydrostatic test will be conducted on the as-built ASME Code equipment identified in Table 2.7.4.4-1 required to be hydrostatically tested by the ASME Section III.	3. A report exists and concludes that the results of the hydrostatic test of the as-built ASME Code equipment identified in Table 2.7.4.4-1 conform with ASME Section III requirements.
4. The seismic Category I equipment identified in Table 2.7. 4.4-1, including the supports and anchorages, withstands seismic design basis loads without loss of safety function.	4.a Inspections will be performed to verify that the as-built seismic Category I equipment is located in the seismic Category I structure.	4.a The as-built seismic Category I equipment identified in Table 2.7.4.4-1 is located in the seismic Category I structure.
	4.b Type tests, analyses or a combination of type tests and analyses of seismic Category I equipment will be performed.	4.b A report exists and concludes that the seismic Category I equipment identified in Table 2.7.4.4-1 can withstand seismic design basis loads without loss of safety function.
	4.c Inspections will be performed to verify that the as-built seismic Category I equipment, including the supports and anchorages, is seismically bounded by the tested or analyzed conditions	4.c A report exists and concludes that the as-built seismic Category I equipment identified in Tables 2.7.4.4-1, including the supports and anchorages, is seismically bounded by the tested or analyzed conditions.

Table 2.7.4.4-2 (2 of 3)

Design Commitment	Inspections, Tests, Analyses	Acceptance Criteria
5. The seismic Category II equipment identified in Table 2.7.4.4-1 retains structural integrity and does not impair the ability of a seismic Category I equipment to perform its design basis safety function during or following a safe shutdown earthquake (SSE).	5. Inspections and analyses of the as-built seismic Category II equipment will be performed.	5. A report exists and concludes that the as-built seismic Category II equipment identified Table 2.7.4.4-1 does not impair the ability of a seismic Category Ⅰ equipment to perform its design basis safety function during or following an SSE.
6. The RM, SFHM and CEACP hoists are provided with load measuring devices and are interlocked to interrupt hoisting and lowering if load limits are reached.	6. Test of the RM, SFHM and CEACP hoists will be performed to evaluate equipment response to simulated loads.	6. Load measuring devices and interlocks of the RM, SFHM and CEACP hoists interrupt hoisting and lowering when simulated load limits are reached.
7. The RM, SFHM and CEACP hoists are interlocked to limit upward hoist travel.	7. Test of the RM, SFHM and CEACP hoists will be performed to confirm that the interlock function works to limit upward hoist travel.	7. The RM, SFHM and CEACP hoists are interlocked to limit upward hoist travel.
8 The RM, SFHM and CEACP hoists are provided with mechanical stops. The mechanical stops restrict withdrawal of the spent fuel assemblies or CEAs above the minimum safe water cover depth (9 ft). This, along with the shielding provided by the refueling equipment, ensures that an operator on the refueling platform is not exposed to the radiation dose limit of 2.5 mrem/hr when at the lower limit of the normal operating water level.	8. Test of the RM, SFHM and CEACP hoists will be performed to confirm that the mechanical stops function works to limit upward hoist travel.	8. The RM, SFHM and CEACP hoists limit upward hoist travel of spent fuel assemblies, CEAs, or both to provide at least 9 ft of water cover depth.

Table 2.7.4.4-2 (3 of 3)

Design Commitment	Inspections, Tests, Analyses	Acceptance Criteria
9. During a loss of electrical power to the RM or SFHM, the RM or SFHM does not drop the fuel assembly held by its hoist.	9. Test of the RM and SFHM will be performed by removing electrical power from the loaded equipment.	9. The grapple does not open upon the loss of electrical power.
10. The new fuel elevator is interlocked to prevent from raising the elevator with a fuel assembly in the carriage assembly.	10. Test of the new fuel elevator will be performed to confirm that the interlock function works to limit travel.	10. The new fuel elevator does not raise with a fuel assembly in the carriage assembly.

2.7.4.5 Overhead Heavy Load Handling System

2.7.4.5.1 Design Description

The overhead heavy load handling system (OHLHS) is a non-safety-related system that handles and moves any loads greater than a fuel assembly load plus its handling device. OHLHS consists of one fuel handling area overhead crane, one containment polar crane, and other cranes and hoists that handle heavy loads which may damage safe shutdown equipment in the event of accidental drop.

The containment polar crane is used to handle the reactor vessel head in the area of the reactor vessel and the fuel handling area overhead crane is used to handle new fuel containers and spent fuel casks in the fuel handling area.

The containment polar crane is designed as a single-failure-proof crane so that any single failure does not result in losing the crane's capability to perform its own functions. The containment polar crane is also designed as seismic Category II and therefore, the dynamic effects arising from seismic events are restricted by the seismic restraints which prevent the bridge or trolley from leaving the rails during and after a safe shutdown earthquake (SSE).

The fuel handling area overhead crane, equipped with a cask handling hoist and a fuel handling hoist, is mounted on the rail that extends the entire length of the fuel handling area. Once fuel assemblies are received onsite, provisions are installed permanently to restrict movement of the crane over the spent fuel pool (SFP) area for safe heavy-load handling.

The fuel handling area overhead crane is designed as seismic Category II. During an SSE, the fuel handling area overhead crane and all its components retain structural integrity, and the bridge and trolley remain in place on their respective runways with their wheels prevented from leaving the tracks.

1. The functional arrangement of the OHLHS is as described in the Design Description of Subsection 2.7.4.5.1.

2. The OHLHS retains structural integrity and does not impair the ability of a seismic Category I equipment to perform its design basis safety function during or following an SSE.

3. The containment polar crane and fuel handling area crane have seismic restraints that prevent the bridge and trolley on their respective runways with their wheels from leaving the tracks during and after an SSE.

4. The containment polar crane has the dual reeving system and at least two holding brake system.

5. OHLHS prevents the uncontrolled lowering of a heavy load.

6. The hoists of containment polar crane and the fuel handling area overhead crane are provided with two limit switches to prevent the hoisting system from two-blocking.

7. The fuel handling hoist of fuel handling area overhead crane is interlocked to prevent moving new fuel over the spent fuel storage racks in the spent fuel pool.

8. The cask handling hoist of fuel handling area overhead crane is interlocked and equipped with mechanical stops to prevent moving a cask over the spent fuel storage racks in the spent fuel pool, and interlocked to prevent moving a cask over the new fuel storage racks.

9. The OHLHS has a control system to return to or maintain a secure holding position of critical loads in the event of a system fault.

2.7.4.5.2 Inspections, Tests, Analyses, and Acceptance Criteria

The ITAAC for the OHLHS is described in Table 2.7.4.5-1.

Table 2.7.4.5-1 (1 of 3)

Overhead Heavy Load Handling System ITAAC

Design Commitment	Inspections, Tests, Analyses	Acceptance Criteria
1. The functional arrangement of the OHLHS is as described in the Design Description of Subsection 2.7.4.5.1.	1. Inspection of the as-built system will be conducted.	1. The as-built OHLHS conforms with the functional arrangement as described in the Design Description of subsection 2.7.4.5.1.
2. The OHLHS retains structural integrity and will not impair the ability of a seismic Category I equipment to perform its design basis safety function during or following an SSE.	2. Inspection and analyses will be performed for the as-built seismic Category II OHLHS.	2. A report exists and concludes that the as-built OHLHS retains structural integrity and does not impair the ability of a seismic Category I equipment to perform its design basis safety function during or following an SSE.
3. The containment polar crane and fuel handling area crane have seismic restraints that prevent the bridge and trolley on their respective runways with their wheels from leaving the tracks during and after an SSE.	3. Inspections, test and analyses will be performed for the as-built of the polar carne and fuel handling area crane.	3. A report exists and concludes that the as-built seismic restraints prevent bridge and trolley on their respective runways with their wheels from leaving the tracks during and after an SSE.
4. The containment polar crane has the dual reeving system and at least two holding brake system.	4. Inspection and tests will be performed on the as-built polar crane main and auxiliary hoists to verify following provisions in accordance with ASME NOG-1, Type I: • dual reeving system • at least two holding brakes • all weld joint whose failure could result in the drop of a critical load are subject to non- destructive examination (NDE) in accordance with ASME NOG-1.	4. A report exists and concludes that the as-built containment polar crane main and auxiliary hoists are a single-failure-proof cranes with the following characteristics: • tolerate a single reeving system rope failure without a load drop. • are equipped with two holding brakes, each of which is set and rated at a minimum torque of 125 % of rated hoisting torque at the point of brake application. • all weld joints meet ASME NOG-1 criteria for NDE.

Table 2.7.4.5-1 (2 of 3)

Design Commitment	Inspections, Tests, Analyses	Acceptance Criteria
5. OHLHS prevents the uncontrolled lowering of a heavy load.	5. The following tests for the OHLHS will be performed in accordance with ASME NOG-1: • full-load test with a minimum of 100% of rated load in accordance with ASME NOG-1. • rated load test with a minimum of 125% of rated load in accordance with ASME NOG-1. • no-load test in accordance with ASME NOG-1.	5. A report exists and concludes that the as-built OHLHS allows the crane to operate in accordance with ASME NOG-1 testing for no-load, full-load, and 125% of rated power load.
6. The hoists of containment polar crane and the fuel handling area overhead crane are provided with two limit switches to prevent the hoisting system from two-blocking.	6. Tests of the fuel handling area overhead crane and containment polar crane hoists will be performed to confirm limit switches de-energize the hoist drive motor and the motor power supply prior to two-blocking.	6. The fuel handling area overhead crane and containment building polar crane hoists are equipped with limit switches that de-energize the hoist drive motor and the motor power supply prior to two-blocking.
7. The fuel handling hoist of fuel handling area overhead crane is interlocked to prevent moving new fuel over the spent fuel storage racks in the spent fuel pool.	7. Tests of fuel handling hoist of fuel handling area overhead crane will be performed to confirm the interlock function to limit travel.	7. The fuel handling hoist of fuel handling area overhead crane is limited by the interlock to prevent travel over the spent fuel storage racks in the spent fuel pool.
8. The cask handling hoist of fuel handling area overhead crane is interlocked and equipped with mechanical stops to prevent moving a cask over the spent fuel storage racks in the spent fuel pool, and interlocked to prevent moving a cask over the new fuel storage racks.	8. Tests of cask handling hoist of fuel handling area overhead crane will be performed to confirm the interlock function and mechanical stop to limit travel.	8. The cask handling hoist travel of fuel handling area overhead crane is limited by the interlock and the mechanical stops.

Table 2.7.4.5-1 (3 of 3)

Design Commitment	Inspections, Tests, Analyses	Acceptance Criteria
9. OHLHS has a control system to return to or maintain a secure holding position of critical loads in the event of a system fault.	9. Tests of the as-built OHLHS control system will be performed to assure that the as-built OHLHS returns to or maintains a secure holding position of critical loads in the event of a system fault.	9. The as-built control system includes safety devices which assure that the as-built OHLHS returns to or maintains a secure holding position of critical loads in the event of a system fault.

2.7.5 Auxiliary System

2.7.5.1 Compressed Air and Gas Systems

2.7.5.1.1 Design Description

The compressed air and gas systems are composed of the compressed air system (CAS), compressed gas system, and breathing air system. The CAS comprises the instrument air system (IAS) and the service air system (SAS). The compressed gas system is composed of nitrogen subsystem, hydrogen subsystem, and carbon dioxide subsystem.

The CAS are non-safety-related systems with the exception of the containment isolation valves (CIVs) and the piping between the CIVs that are safety-related, ASME Section III Class 2 and seismic Category I as described in Subsection 2.11.3. The CAS performs the containment isolation function for the CAS lines penetrating the containment.

2.7.5.1.2 Inspections, Tests, Analyses, and Acceptance Criteria

The ITAAC related to the CIVs and the piping between the CIVs of the CAS are described in Table 2.11.3-2.

2.7.5.2 Fire Protection System

2.7.5.2.1 Design Description

The fire protection system (FPS) is classified as a non-safety-related system with the exception of the containment isolation function. The FPS provides fire detection and suppression capabilities and mitigates fire propagation.

The FPS consists of a water distribution system, automatic and manual suppression systems, a fire detection and alarm system, and portable fire extinguishers. Main components of the FPS are located in yard and auxiliary building. The FPS provides fire protection for containment building, auxiliary building, turbine building, and compound building. The FPS has a safety-related containment isolation function as described in Subsection 2.11.3.

Seismic Category I design is applied to the FPS located in the auxiliary building, emergency diesel generator building, and containment building containing safe shutdown equipment.

To meet functional requirements, the FPS is designed as follows:

1. The functional arrangement of the FPS is as described in the Design Description of Subsection 2.7.5.2.1 and as shown in Figure 2.7.5.2-1.

2.a The main fire water storage tank has minimum volume for design flow rate for fire fighting during 2 hours.

2.b The seismic Category I fire water storage tank has minimum volume for 2 hose station during 2 hours.

3.a There are three 50 percent capacity fire pumps: one pump is motor driven and two pumps are diesel driven.

3.b There are two 100 percent capacity seismic Category I motor driven fire pumps.

4. The FPS fire water supply is available as emergency containment spray backup source for severe accident mitigation.

5. During and after safe-shutdown earthquake loading, the stand pipe system remains functional in areas containing equipment required for safe shutdown.

6. The fuel tank for the diesel-driven fire pump is capable of holding at least equal to 5.07 L per kW(1 gal per hp) plus 10 percent volume.

7. Manual pull stations or individual fire detectors provide fire detection capability and are used to initiate fire alarms.

8.a Displays and alarms exist and are retrievable in the MCR as defined in Table 2.7.5.2-2.

8.b Displays and alarms exist and are retrievable in the RSR as defined in Table 2.7.5.2-2.

2.7.5.2.2 Inspections, Tests, Analyses, and Acceptance Criteria

The inspections, tests, analyses and associated acceptance criteria for the fire protection system are described in Table 2.7.5.2-3.

The ITAAC associated with the FPS equipment, components and piping that comprise a portion of the CIS are described in Table 2.11.3-2.

Table 2.7.5.2-1

Fire Protection System Components List

Component Name	Item No.	ASME Section III Class	Seismic Category	Electrical Class 1E/Harsh Environ. Qual.	Display/ Control at MCR	Display/ Control at RSR	Control Signal	Active Safety Function	Loss of Motive Power Position
Normal Fire Pump	FP-PP01~03	-(1)	III	No/No	No/Yes	No/Yes	-	Start/Stop	-
Jockey Pump	FP-PP04	-	III	No/No	No/Yes	No/Yes	-	Start/Stop	-
Seismic Category I Fire Pump	FP-PP05/PP06	-	I	Yes/No	No/Yes	No/Yes	-	Start/Stop	Stop
Seismic Category I Valves	FP-V030 (AOV) V-1440 (CHK)	2	I	Yes/Yes	No/Yes No/No	No/Yes No/No	CIAS	Open/Close	Close
Seismic Category I Tank	TK-03, TK-04	-	I	No/No	Yes/No	Yes/No	-	No	-

(1) Dash(-) indicates not applicable.

Table 2.7.5.2-2

Fire Protection Systems Instruments List

Channel Name	Item No.	Seismic Category	Class 1E/ Harsh Envir. Qual.	Display/ Alarm at MCR	Display/ Alarm at RSR
Fresh Water Storage Tank Level	L-003/004	III	No/No	Yes/Yes	Yes/Yes
Seismic Category I Storage Tank Level	L-045/046	I	No/No	Yes/Yes	Yes/Yes
Fresh Water Storage Tank Temp	T-001/002	III	No/No	Yes/Yes	Yes/Yes
Fire Pump Discharge piping Pressure	P-004	III	No/No	Yes/Yes	Yes/Yes
Diesel Fuel Tank Level	L-072	III	No/No	Yes/Yes	Yes/Yes

Table 2.7.5.2-3 (1 of 2)

Fire Protection System ITAAC

Design Commitment		Inspections, Tests, Analyses		Acceptance Criteria	
1.	The functional arrangement of the FPS is as described in the Design Description of Subsection 2.7.5.2.1 and as shown in Figure 2.7.5.2-1.	1.	Inspection of the as-built FPS will be performed.	1.	The as-built FPS conforms with the functional arrangement as described in the Design Description of Subsection 2.7.5.2.1 and as shown in Figure 2.7.5.2-1.
2.a	The main fire water storage tank has minimum volume for design flow rate for fire fighting during 2 hours.	2.a	Inspection of the as-built main fire water storage tank will be performed.	2.a	The as-built main fire water storage tank has at least 1.136×10^6 L (300,000 gal).
2.b	The seismic Category I fire water storage tank has minimum volume for 2 hose station during 2 hours.	2.b	Inspection of the as-built Seismic Category I fire water storage tank will be performed.	2.b	The as-built seismic Category I fire water storage tank has at least 6.813×10^4 L (18,000 gal).
3.a	There are three 50 percent capacity fire pumps: one pump is motor driven and two pumps are diesel driven.	3.a	Test and analysis will be performed to determine design flow rate for the as-built each pump.	3.a	A report exists and concludes that each fire pump provides the design flow rate to satisfy the demand of any automatic sprinkler system plus 1,900 lpm (500 gpm) for fire hoses.
3.b	There are two 100 percent capacity seismic Category I motor driven fire pumps.	3.b	Test and analysis will be performed to determine design flow rate for each as-built pump.	3.b	A report exists and concludes that each seismic Category I fire pump provides the design flow rate to satisfy the demand of two fire hoses 284 lpm/each (75 gpm/each) in each area containing safe shutdown components.
4.	The FPS fire water supply is available as emergency containment spray backup source for severe accident mitigation.	4.	Inspection of the as-built FPS fire water supply system will be performed.	4.	The as-built FPS fire water supply system has the provision to connect to the containment spray system.

Table 2.7.5.2-3 (2 of 2)

Design Commitment	Inspections, Tests, Analyses	Acceptance Criteria
5. During and after safe shutdown earthquake loading, the stand pipe system remains functional in areas containing equipment required for safe shut down.	5. An inspection and analysis will be performed of the as-built stand pipe system as documented in a seismic design report.	5. The seismic design report exists and concludes that the as-built stand pipe system remains functional in areas containing equipment required for safe shutdown during and after safe shutdown earthquake loading.
6. The fuel tank for the diesel-driven fire pump is capable of holding at least equal to 5.07 L per kW (1 gal per hp) plus 10 % volume.	6. Inspection of the diesel-driven fire tank will be performed	6. The volume of the as-built diesel fire pump fuel tank is at least equal to 5.07 L per kW (1 gal per hp) plus 10 % volume.
7. Manual pull stations or individual fire detectors provide fire detection capability and are used to initiate fire alarms.	7. Inspection and testing of the as-built manual pull stations and individual fire detectors will be performed using simulated fire conditions.	7. The as-built manual pull stations initiate fire alarms when pulled, and individual fire detectors initiate fire alarms in response to simulated fire conditions.
8.a Displays and alarms exist and are retrievable in the MCR as defined in Table 2.7.5.2-2.	8.a Inspections of the as-built displays and alarms in the MCR will be performed.	8.a Displays and alarms exist and are retrieved in the as-built MCR as defined in Table 2.7.5.2-2.
8.b Displays and alarms exist and are retrievable in the RSR as defined in Table 2.7.5.2-2.	8.b Inspections of the as-built displays and alarms in the RSR will be performed.	8.b Displays and alarms exist and are retrieved in the as-built RSR as defined in Table 2.7.5.2-2.

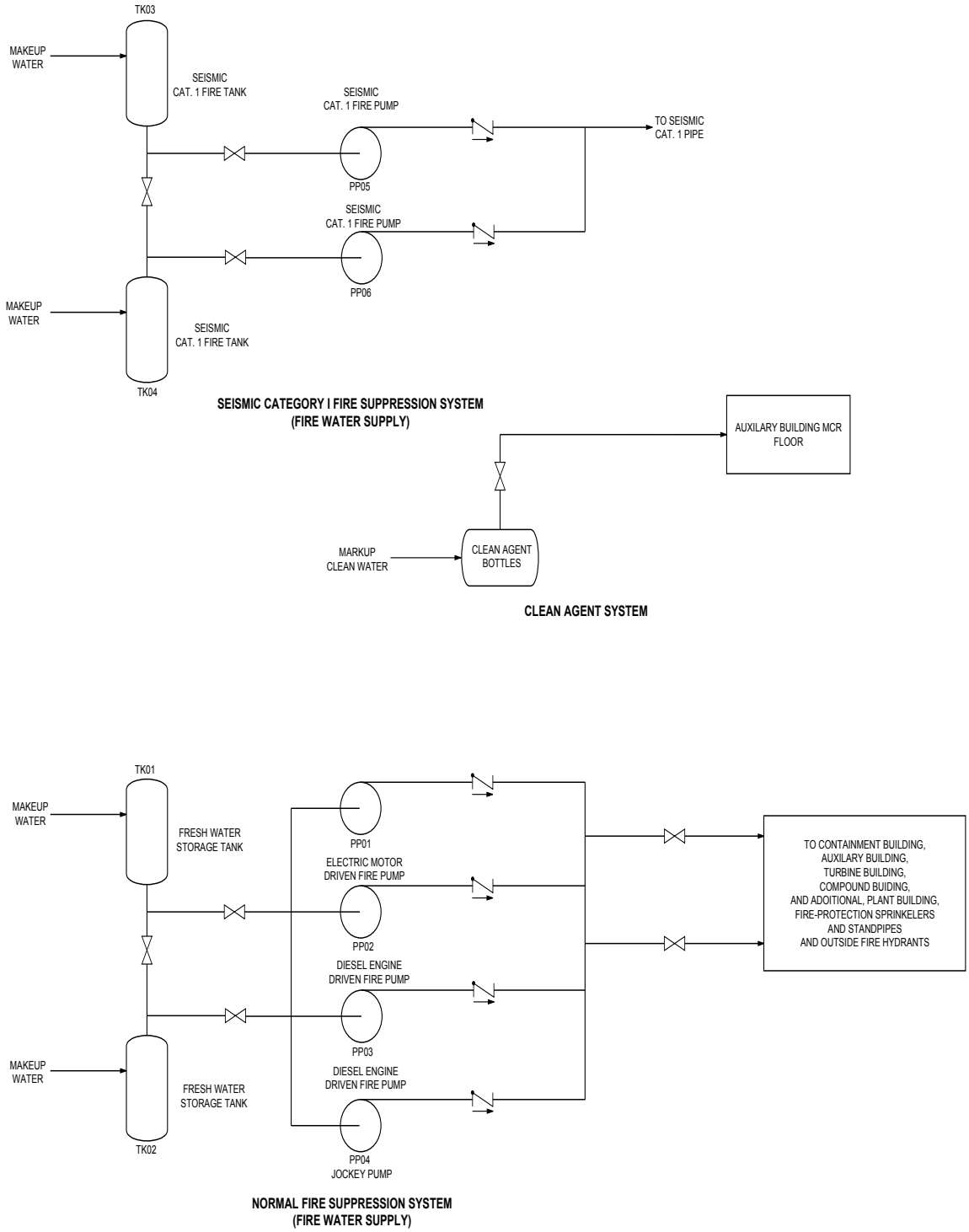

Figure 2.7.5.2-1 Fire Protection System

2.7.5.3 Domestic Water and Sanitary Systems

No entry for this system.

2.7.6 Radioactive Waste Management

2.7.6.1 Liquid Waste Management System

2.7.6.1.1 Design Description

The liquid waste management system (LWMS) is a non-safety-related system. The LWMS is designed to handle, process, store, and release the liquid radioactive waste generated during normal operation including anticipated operational occurrences (AOOs). The LWMS treats liquid radioactive waste using eight (8) collection tanks for segregated staging of liquids, two (2) reverse osmosis (R/O) package systems for processing, and two monitor tanks to collect treated effluent for staging confirmatory sampling and analysis. The R/O package system is designed to process liquid radioactive waste with a pretreatment module, an R/O module and a demineralizer module. By sampling from monitor tanks, LWMS provides means to monitor and confirm that the radioactivity levels in the processed liquid waste are below the release limits prior to discharge. The LWMS provides sufficient capacity, redundancy, and flexibility to treat the liquid radioactive waste in a manner to reduce the radionuclide concentrations to meet the effluent concentration and dose limits in 10 CFR Part 20, Appendix B, Table 2 and 10 CFR Part 50, Appendix I dose objectives for liquid effluents.

During plant operation, treated effluent is collected in the monitor tanks and each batch is sampled for confirmation that the effluent concentrations are within the discharge specifications prior to discharge operation. The effluent is also continuously monitored for radioactivity levels during discharge. The radiation monitor will provide alarms in the MCR and the radwaste control room for operator action in the event that the effluent exceeds a predetermined radiation setpoint, simultaneously turn off the monitor tank pump, and close the discharge valves. The tank contents will be recycled for further treatment before release.

The LWMS is located in the compound building. The component cubicles are designed with early detection features to minimize the spread of unintended contamination. The LWMS consists of equipment waste subsystem, floor drain subsystem, chemical waste subsystem and detergent waste subsystem.

1. The functional arrangement of the LWMS is as described in the Design Description of Subsection 2.7.6.1.1 and in Table 2.7.6.1-1 and as shown in Figure 2.7.6.1-1.

2. The LWMS has the sole liquid discharge line which is equipped with dual radiation monitors and an automatic discharge valve. The valve is to automatically close upon detection of a high radioactivity level in the liquid effluent that exceeds a predetermined setpoint.

3. The LWMS uses two (2) trains of industry-proven R/O technologies. The R/O trains are sized adequately to remove radionuclides to maintain radioactivity in the liquid releases within regulatory limits. Three (3) demineralizers in each demineralizer module are added to polish the permeate to further remove any residual nuclides in the effluent.

4. The LWMS uses two (2) sets of monitor tanks and pumps. The tanks are provided with eductors to thoroughly mix the tank content for sampling and analysis to confirm that the contamination level in the treated effluent is below the regulatory limits for discharge. Dual radiation monitors are provided to continuously monitor the radiation levels during discharge operation and alarm in the MCR and radwaste control room upon detection of a high radioactivity level.

5. The LWMS components are classified as RW-IIa, RW-IIb and RW-IIc in accordance with NRC RG 1.143 and designed to the corresponding requirements in order to maintain structural integrity under the design basis loads. Component Radiation Safety Classification is summarized in Table 2.7.6.1-1.

6. Dual radiation monitors and an isolation valve are provided on the LWMS sole discharge line.

7. Leak detection design for floor drain tanks provides an alarm in MCR and RCR of liquid detection.

8. Leak detection design for equipment waste tanks provides an alarm in MCR and RCR of liquid detection.

9. Leak detection design for monitor tanks provides an alarm in MCR and RCR of liquid detection.

2.7.6.1.2 Inspections, Tests, Analyses, and Acceptance Criteria

The ITAAC for the LWMS is described in Table 2.7.6.1-2.

Table 2.7.6.1-1

Liquid Waste Management System Component List

Component Name	Item No.	Quantity	Location	Radwaste Safety Class
Floor drain tanks	WV-TK01/02	2	Compound Building	RW-IIa
Equipment waste tanks	WV-TK03/04	2	Compound Building	RW-IIa
Chemical waste tanks	WV-TK05/06	2	Compound Building	RW-IIc
Monitor tanks	WV-TK07/08	2	Compound Building	RW-IIc
Detergent waste tanks	WY-TK01/02	2	Compound Building	RW-IIc
Floor drain pumps	WV-PP01/02	2	Compound Building	RW-IIc
Equipment waste pumps	WV-PP03/04	2	Compound Building	RW-IIc
Chemical waste tank pumps	WV-PP05/06	2	Compound Building	RW-IIc
Monitor tank pumps	WV-PP07/08	2	Compound Building	RW-IIc
Seal Water Storage Tank	WV-TK07	1	Compound Building	RW-IIc
Seal Water Pump	WV-PP07/08	2	Compound Building	RW-IIc
Seal Water Heat Exchanger	WV-HE01	1	Compound Building	RW-IIc
Detergent waste tank pumps	WY-PP01/02	2	Compound Building	RW-IIc
Detergent waste filter	WY-FT01	1	Compound Building	RW-IIc
R/O package systems (1)	WV-ZR01/02	2	Compound Building	RW-IIc
Pretreatment Module				RW-IIb
RO Feed Tank				RW-IIb
RO Feed Pump				RW-IIa
RO Module				RW-IIc
IX Feed Tank				RW-IIc
IX Feed Pump				RW-IIa
Cation Bed				RW-IIa
Mixed Bed 1				RW-IIc
Mixed Bed 2				RW-IIa
Concentrate Holding Tank				

(1) The detail configuration of R/O package may be site specific and the relevant radwaste safety classification is subject to adjustment based on the equipment type and the waste to be handled by the individual equipment.

Table 2.7.6.1-2 (1 of 3)

Liquid Waste Management System ITAAC

Design Commitment	Inspections, Tests, Analyses	Acceptance Criteria
1. The functional arrangement of the LWMS is as described in the Design Description of Subsection 2.7.6.1.1 and in Table 2.7.6.1-1 and as shown in Figure 2.7.6.1-1.	1. Inspection of the as-built LWMS will be performed.	1. The as-built LWMS conforms with the functional arrangement as described in the Design Description of Subsection 2.7.6.1.1 and in Table 2.7.6.1-1 and as shown in Figure 2.7.6.1-1.
2. The LWMS has the sole liquid discharge line which is equipped with dual radiation monitors and an automatic discharge valve. The valve is to automatically close upon detection of a high radioactivity level in the liquid effluent that exceeds a predetermined setpoint.	2. Tests of the as-built LWMS discharge valves will be performed using a simulated test signal.	2. The as-built LWMS discharge valves are automatically closed upon detection of a simulated high radiation test signal.
3. The LWMS uses two (2) trains of industry proven R/O technologies. The R/O trains are sized adequately to remove radionuclides to maintain radioactivity in the liquid releases within regulatory limits. Three (3) demineralizers in each demineralizer are added to polish the permeate to further remove any residual nuclides in the effluent.	3. Inspection and verification of media of the as-built R/O package will be performed per design specifications to verify that the DF and filtration efficiency of R/O package system meet or exceed the design specifications using verified test results.	3. A report concludes that the as-built R/O package has the decontamination factor and filtration efficiency equal to or greater than the design basis of the whole package including the R/O module and demineralizer module.

Table 2.7.6.1-2 (2 of 3)

Design Commitment	Inspections, Tests, Analyses	Acceptance Criteria
4. The LWMS uses two (2) sets of monitor tanks and pumps. The tanks are provided with eductors to thoroughly mix the tank content for sampling and analysis to confirm that the contamination level in the treated effluent is below the regulatory limits for discharge. Dual radiation monitors are provided to continuously monitor the radiation levels during discharge operation and alarm in the MCR and radwaste control room upon detection of a high radioactivity level.	4. Tests of the radiation monitor alarm signal will be performed to verify that the signal is annunciated in the MCR and radwaste control room using simulated test signals at the required setpoint.	4. An alarm from the radiation monitor at the liquid waste discharge line can be retrieved in the as-built MCR.
5. The LWMS components are classified as RW-IIa, RW-IIb and RW-IIc in accordance with NRC RG 1.143 and designed to the corresponding requirements in order to maintain structural integrity under the design basis loads. Component Radiation Safety Classification is summarized in Table 2.7.6.1-1.	5. Inspection and analysis will be performed on the as-built equipment classified as RW-IIa, RW-IIb and RW-IIc in Table 2.7.6.1-1.	5. A report exists and concludes that the as-built equipment classified as RW-IIa, RW-IIb and RW-IIc in Table 2.7.6.1-1 maintains structural integrity under the design basis loads.
6. Dual radiation monitors and an isolation valve are provided on the LWMS sole discharge line.	6. Inspection will be performed for the installation of dual radiation monitors and an isolation valve, and signal tests will be conducted to verify alarm, pump shut-off, and valve closure.	6. A report concludes that the as-built radiation monitors and isolation valve are installed as designed and verify alarm, pump shut-off, and valve closure by signal tests that are established consistent with the radiation monitor setpoints.

Table 2.7.6.1-2 (3 of 3)

Design Commitment	Inspections, Tests, Analyses	Acceptance Criteria
7. Leak detection design for floor drain tanks provides an alarm in MCR and RCR of liquid detection	7. Inspection of the as-built leak detection system, and signal test will be conducted to verify the alarm in the MCR and radwaste control room	7. The as-built leak detection instrumentation is installed as designed; and the alarm is verified in the MCR and radwaste control room
8. Leak detection design for equipment waste tanks provides an alarm in MCR and RCR of liquid detection	8. Inspection of as-built leak detection system, and signal test will be conducted to verify alarm in MCR and radwaste control room	8. The as-built leak detection instrumentation is installed as designed; and the alarm is verified in the MCR and radwaste control room
9. Leak detection design for monitor tanks provides an alarm in MCR and RCR of liquid detection	9. Inspection of as-built leak detection system, and signal test will be conducted to verify alarm in radwaste control room	9. The as-built leak detection instrumentation is installed as designed; and the alarm is verified in the MCR and radwaste control room

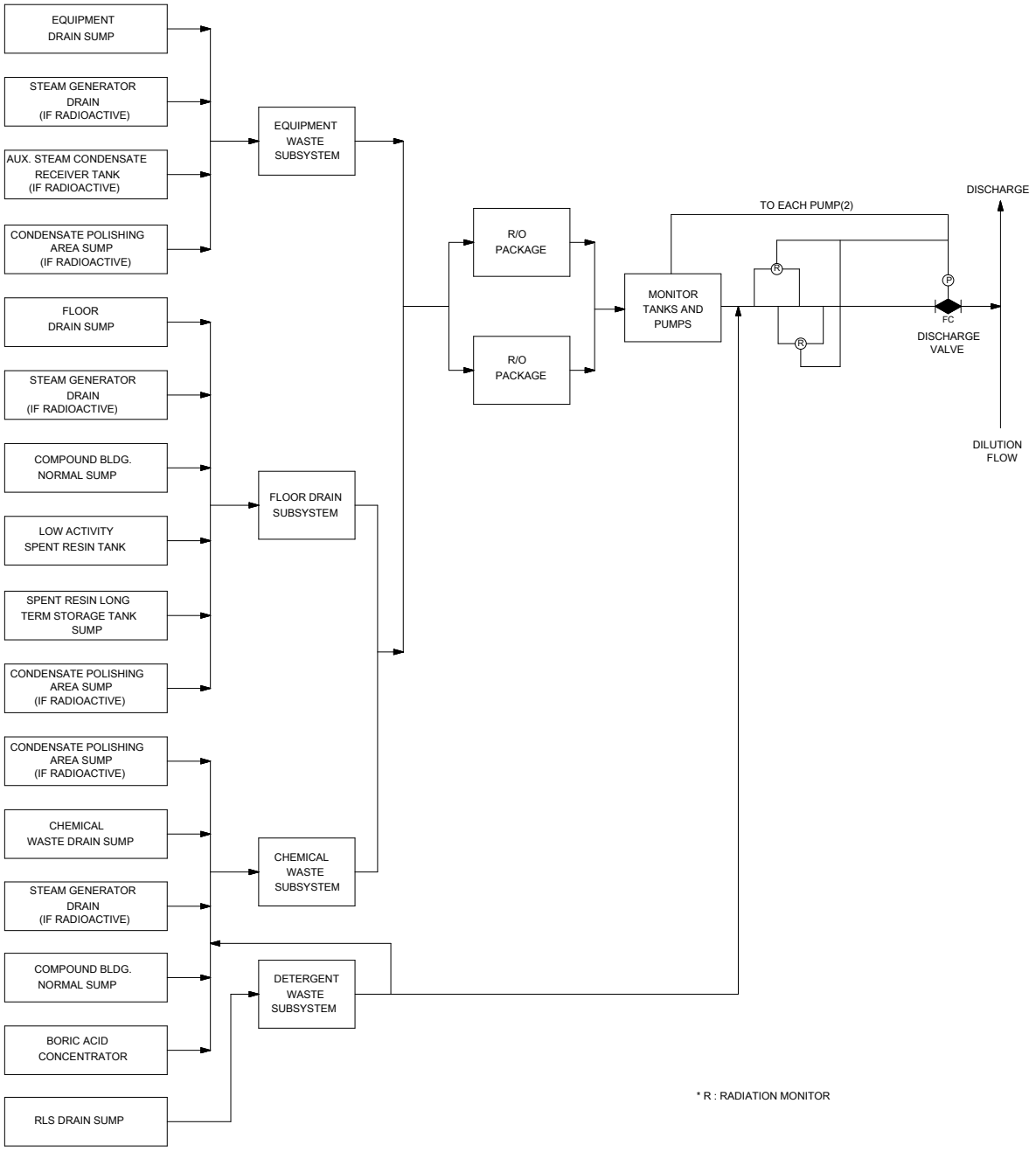

Figure 2.7.6.1-1 Liquid Waste Management System

2.7.6.2 Gaseous Waste Management System

2.7.6.2.1 Design Description

The gaseous waste management system (GWMS) consists of the gaseous radwaste system (GRS) and the building ventilation HVAC systems. The design and methods of treatment for the building ventilation subsystems are discussed in Section 9.4 of this DCD, Tier 2 and the condenser vacuum subsystem is discussed in Section 10.4 of the DCD, Tier 2. This subsection covers the design of the GRS, which handles and processes reactor offgas from the chemical and volume control system (CVCS). The GRS is non-safety-related with the exception of containment penetration isolation valves and the piping. The GRS is designed to collect, store, process, sample and monitor gaseous radioactive waste generated as a result of normal operation, including anticipated operational occurrences (AOOs). The GRS ensures that gaseous waste releases comply with effluent concentration and dose limit in 10 CFR Part 20, Appendix B, and 10 CFR Part 50, Appendix I dose objectives for gaseous effluents.

The GRS is located in the compound building. The GRS is designed to process gaseous radioactive waste with charcoal delay beds having adequate charcoal mass for adsorption of nuclides for decay in order to keep releases within regulatory limits. The waste gas dryer and charcoal guard bed remove the moisture in the radioactive waste to protect the charcoal delay beds. The GRS is designed for continuous operation. Treated effluent is continuously monitored for radioactivity levels during discharge. The radiation monitor will provide alarms in the MCR and the radwaste control room in the event that the effluent exceeds a predetermined radiation setpoint, and simultaneously close the discharge valve.

The GRS is designed as follows:

1. The functional arrangement of the GRS is as described in the Design Description of Subsection 2.7.6.2.1 and in Tables 2.7.6.2-1 and 2.7.6.2-3 and as shown in Figure 2.7.6.2-1.

2. The GRS charcoal delay beds contain the appropriate type, size, and mass of charcoal needed to facilitate adsorption of radionuclides (xenon and krypton gases) for decay to ensure that the gaseous releases are within the regulatory limits. Moisture instruments are provided for the protection of the charcoal delay beds.

3. The GRS discharge valve is closed automatically upon detection of a high radiation signal from the radiation monitor at the gaseous waste discharge. The discharge valve is also automatically closed when there is insufficient or no ventilation flow.

4. An alarm from the gaseous waste discharge radiation monitor is provided in the MCR, the RSR, and the radwaste control room.

5. The nitrogen injection valve is opened automatically upon receipt of a high oxygen concentration signal above the pre-determined setpoint.

6. The GRS components are classified as RW-IIa in accordance with NRC RG 1.143 and designed to the corresponding requirements in order to maintain structural integrity under the design basis loads. Component Radiation Safety Classification is summarized in Table 2.7.6.2-3.

2.7.6.2.2 Inspections, Tests, Analysis, and Acceptance Criteria

The inspections, tests, and analyses, and associated acceptance criteria for the gaseous radwaste system is specified in Table 2.7.6.2-4 except for containment penetration isolation valves and piping.

The inspection, tests, analyses, and associated acceptance criteria for the containment penetration isolation valves and piping of GRS are specified in Table 2.11.3-2.

Table 2.7.6.2-1

Gaseous Radwaste System Piping Location/Characteristics

Piping Name	Location	ASME Section III Class	Seismic Category
The portion of containment penetration piping including inside isolation valve	Reactor Containment Building	2	I
The portion of containment penetration piping including outside isolation valve	Auxiliary Building	2	I

Table 2.7.6.2-2

Gaseous Radwaste System Components List

Component Name	Item No.	ASME Section III Class	Seismic Category	Class 1E/ Harsh Envir. Qual.	Display/ Control at MCR	Display/ Control at RSR	Control Signal	Active Safety Function	Loss of Motive Power Position
Containment Isolation Valve(MOV)	V-0001	2	I	Yes/Yes	Yes/Yes	Yes/Yes	CIAS	Close	As Is
Containment Isolation Valve(SOV)	V-0002	2	I	Yes/Yes	Yes/Yes	Yes/Yes	CIAS	Close	Close

Table 2.7.6.2-3

Radwaste Safety Classification of Gaseous Radwaste System

Component Name	Item No.	Quantity	Location	Radwaste Safety Class
Header Drain Tank	GW-TK01	1	Compound Building	RW-IIa
Waste Gas Dryer	GW-CH71/72	2	Compound Building	RW-IIa
Charcoal Guard Bed	GW-PV71/72	2	Compound Building	RW-IIa
Charcoal Delay Bed	GW-PV73/74/75/76	4	Compound Building	RW-IIa
HEPA Filter	GW-FT01	1	Compound Building	RW-IIa

Table 2.7.6.2-4 (1 of 2)

Gaseous Radwaste System ITAAC

Design Commitment	Inspections, Tests, Analyses	Acceptance Criteria
1. The functional arrangement of the GRS is as described in Design Description of Subsection 2.7.6.2.1 and in Tables 2.7.6.2-1 and 2.7.6.2-3 and as shown in Figure 2.7.6.2-1.	1. Inspection of the as-built GRS will be performed.	1. The as-built GRS conforms with the functional arrangement as described in Design Description of Subsection 2.7.6.2.1 and in Tables 2.7.6.2-1 and 2.7.6.2-3 and as shown in Figure 2.7.6.2-1.
2. The GRS charcoal delay beds contain the appropriate type, size, and mass of charcoal needed to facilitate adsorption of radionuclides (xenon and krypton gases) for decay to ensure that the gaseous releases are within the regulatory limits. Moisture instruments are provided for the protection of the charcoal delay beds.	2. Inspection and verification of media in the as-built GRS charcoal beds per design specifications will be performed to verify adsorption efficiency of media.	2. A report concludes that the as-built charcoal delay beds have the appropriate mass and the adsorption efficiency equal to or greater than the design basis of the charcoal delay beds.
3. The GRS discharge valve is closed automatically upon detection of a high radiation signal from the radiation monitor at the gaseous waste discharge. The discharge valve is also automatically closed when there is insufficient or no ventilation flow.	3. Tests will be conducted for the GRS discharge valve using simulated test signal.	3. Upon receipt of a simulated GRS high radiation test signal, the as-built GRS discharge valve is closed automatically.
4. An alarm from the gaseous waste discharge radiation monitor is provided in the MCR, the RSR, and the radwaste control room.	4. Inspection will be performed for the retrievability of the alarm from the gaseous waste discharge monitor in the as-built MCR, the RSR, and the radwaste control room.	4. An alarm from gaseous waste discharge radiation monitor can be retrieved in the as-built MCR, the RSR, and the radwaste control room.

Table 2.7.6.2-4 (2 of 2)

Design Commitment	Inspections, Tests, Analyses	Acceptance Criteria
5. The nitrogen injection valve is opened automatically upon receipt of a high oxygen concentration signal above the pre-determined setpoint.	5. Tests will be conducted for the GRS nitrogen injection valve using a simulated test signal.	5. Upon receipt of a simulated high oxygen concentration test signal, the as-built nitrogen injection valve is opened automatically.
6. The GRS components are classified as RW-IIa in accordance with NRC RG 1.143 and designed to the corresponding requirements in order to maintain structural integrity under the design basis loads. Component Radiation Safety Classification is summarized in Table 2.7.6.2-3.	6. Inspection and analysis will be performed on the as-built equipment classified as RW-IIa in Table 2.7.6.2-3.	6. A report exists and concludes that the as-built equipment classified as RW-IIa in Table 2.7.6.2-3 maintains structural integrity under the design basis loads.

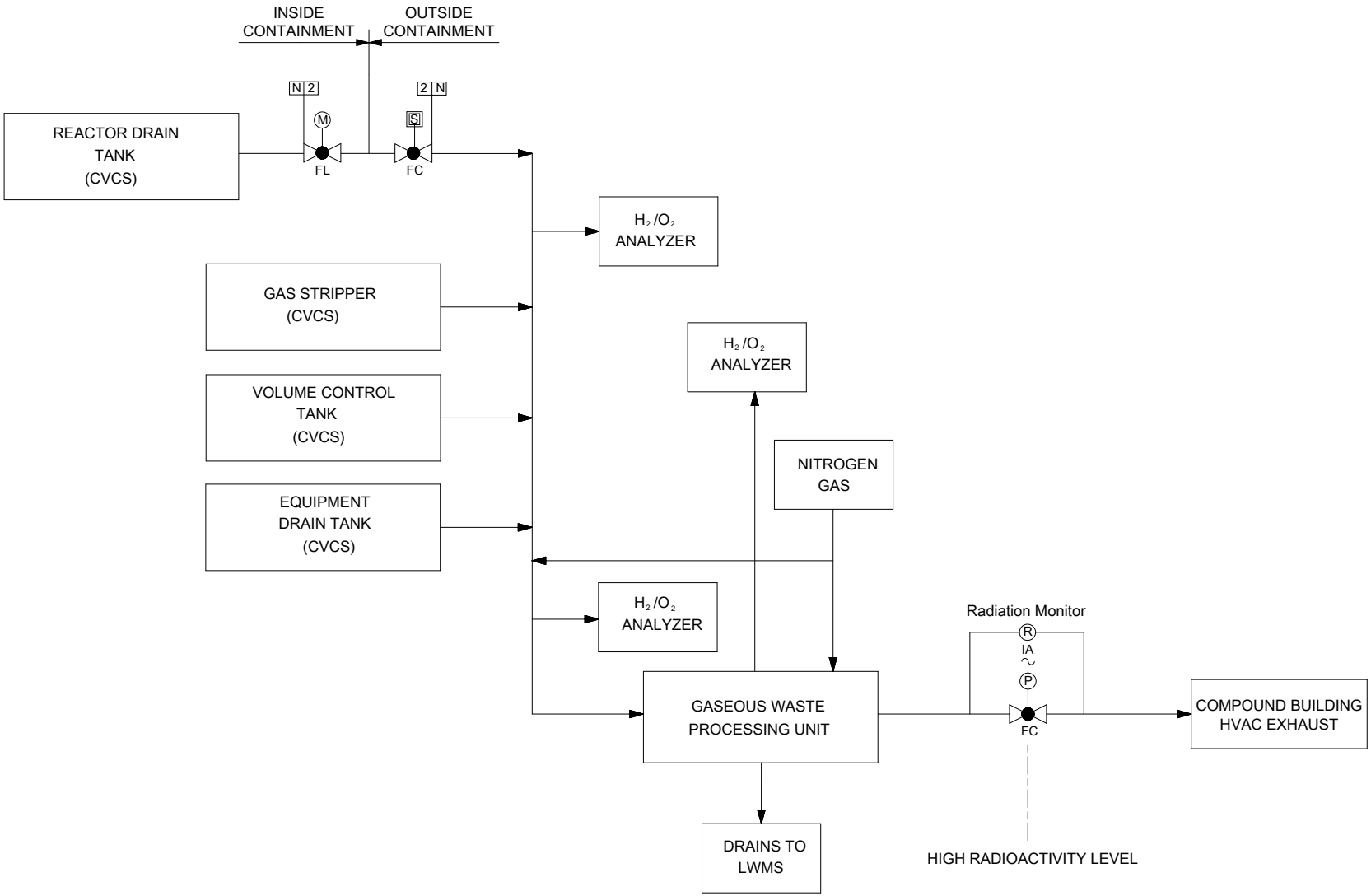

Figure 2.7.6.2-1 Gaseous Radwaste System

2.7.6.3 Solid Waste Management System

2.7.6.3.1 Design Description

The solid waste management system (SWMS) is designed as a non-safety-related system. The SWMS collects, packages, and temporarily stores the solid radioactive wastes prior to shipment.

The SWMS is located in the compound building. The SWMS consists of subsystems to manage various types of solid radioactive waste products, including spent resin, spent filter elements, reverse osmosis (R/O) concentrates, dry active waste (DAW).

1. The functional arrangement of the SWMS is as described in the Design Description of Subsection 2.7.6.3.1 and in Table 2.7.6.3-1.

2. The SWMS spent resin storage tanks listed in Table 2.7.6.3-1 have the capacity for radioactive spent resin storage.

3. The SWMS provides dewatering equipment for spent resin in order to meet transportation and waste acceptance criteria for disposal.

4. The SWMS provides drying equipment for R/O concentrate in order to meet transportation and waste acceptance criteria for disposal.

5. The SWMS components are classified as RW-IIa in accordance with NRC RG 1.143 and designed to the corresponding requirements in order to maintain structural integrity under the design basis loads. Component Radiation Safety Classification is summarized in Table 2.7.6.3-1.

2.7.6.3.2 Inspections, Tests, Analyses, and Acceptance Criteria

The inspections, tests, analyses, and associated acceptance criteria for the SWMS are listed in Table 2.7.6.3-2.

Table 2.7.6.3-1

Solid Waste Management System Component List

Component Name	Item No.	Quantity	Location	Radwaste Safety Class
Low Activity Spent Resin Tank	WX-TK01	1	Compound Building	RW-IIa
Spent Resin Long Term Storage Tank	WX-TK02	1	Compound Building	RW-IIa

Table 2.7.6.3-2 (1 of 2)

Solid Waste Management System ITAAC

Design Commitment	Inspections, Tests, Analyses	Acceptance Criteria
1. The functional arrangement of the SWMS is as described in the Design Description of Subsection 2.7.6.3.1 and in Table 2.7.6.3-1.	1. Inspection of the as-built SWMS will be performed.	1. The as-built SWMS conforms with the functional arrangement as described in the Design Description of Subsection 2.7.6.3.1 and in Table 2.7.6.3-1.
2. The SWMS spent resin storage tanks listed in Table 2.7.6.3-1 have the capacity for radioactive spent resin storage.	2. Inspection and analysis of the as-built spent resin storage capability will be performed.	2. A report exists and concludes that the low activity spent resin tank and spent resin longterm tank have storage capacities of at least 22,654 L (800 ft^3) and 90,189 L (3185 ft^3), respectively, to store waste volume expected during normal operation including anticipated operation occurrences.
3. The SWMS provides dewatering equipment for spent resin in order to meet transportation and waste acceptance criteria for disposal.	3. Test will be performed for the as-built equipment to verify water is removed to below 1% standing water inside the spent resin disposal container using clean resin.	3. A report concludes that the as-built equipment removes water to below 1% standing water inside the spent resin disposal container using clean resin.
4. The SWMS provides drying equipment for R/O concentrate in order to meet transportation and waste acceptance criteria for disposal.	4. Test will be performed for the as-built dryer using simulated sludge in a disposal drum and no gas and vapor leakage can be observed during drying test.	4. A report concludes that the as-built equipment dries simulated sludges and no gas or vapor is observed during test.

Table 2.7.6.3-2 (2 of 2)

Design Commitment	Inspections, Tests, Analyses	Acceptance Criteria
5. The SWMS components are classified as RW-IIa in accordance with NRC RG 1.143 and designed to the corresponding requirements in order to maintain structural integrity under the design basis loads. Component Radiation Safety Classification is summarized in Table 2.7.6.3-1.	5. Inspection and analysis will be performed on the as-built equipment classified as RW-IIa in Table 2.7.6.3-1.	5. A report exists and concludes that the as-built equipment classified as RW-IIa in Table 2.7.6.3-1 maintains structural integrity under the design basis loads.

2.7.6.4 Process and Effluent Radiation Monitoring and Sampling System

2.7.6.4.1 Design Description

The process and effluent radiation monitoring and sampling system (PERMSS) provide components to monitor liquid and gaseous effluents prior to release to unrestricted areas, and to monitor in-plant radioactivity.

The PERMSS is non-safety-related with the exception of the following, each of which is safety-related and Class 1E:

a. Main control room (MCR) air intake radiation monitors

b. Containment building operating area and upper operating area radiation monitors

c. Fuel handling area monitors

d. Containment air radiation monitors

Components of the PERMSS are located in the containment building, the auxiliary building, the compound building, and the turbine building.

1. The functional arrangement of the PERMSS is as described in the Design Description of Subsection 2.7.6.4.1 and in Table 2.7.6.4-1.

2. The PERMSS has components that provide radiation monitoring of gaseous and liquid processing systems.

3. Displays and alarms exist and are retrievable in the MCR and RSR as defined in Table 2.7.6.4-1.

4. Each PERMSS channel monitors the radiation level in its assigned area, and indicates its respective MCR alarm and local audible and visual alarm when the radiation level reaches a preset level.

5. The safety-related divisionalized cabinet (SRDC) of the PERMSS provides an automatic ESFAS initiation signals for each loop including the final component, as shown on Table 2.7.6.4-2.

6. The seismic Category I monitors identified in Table 2.7.6.4-1, including the supports and anchorages, can withstand seismic design basis loads without loss of safety function.

7. Physical separation and electrical isolation are provided (1) between Class 1E divisions, and (2) between Class 1E divisions and non-Class 1E divisions.

8. The steam generator blowdown radiation monitor provides an alarm in the MCR of high radioactive contamination and isolation signal to blowdown valve.

9. Each monitor channel function of PERMSS identified in Table 2.7.6.4-1 is functioning.

10. The containment air radiation monitor non-metallic parts, materials, and lubricants used in safety-related mechanical equipment perform their safety-related function up to the end of their qualified life in the design basis harsh environmental conditions (internal service conditions) experienced during normal operations, anticipated operational occurrences, design-basis accidents, and post accident conditions.

2.7.6.4.2 Inspections, Tests, Analyses, and Acceptance Criteria

Table 2.7.6.4-3 specifies the inspections, tests, analyses, and associated acceptance criteria for the process and effluent radiation monitoring and sampling system.

Table 2.7.6.4-1 (1 of 4)

Process and Effluent Radiation Monitoring and Sampling System Components List

Description	Tag No	Monitor Type (2)	Location	Class (3)			Range (μC/cc) (4)				Display & Alarm at MCR/RSR/ Local
				S	SE	E	Particulate Gross β	I-131 γ	Gas Gross β	Liquid Gross γ	
High Energy Line Break Area HVAC Effluent (offline)	PR-RE-006	Sampler (P,I)	Auxiliary Building	N	III	N	Sampler	Sampler	N/A	N/A	No/No/No
High Energy Line Break Area Exhaust ACU Inlet (offline)	PR-RE-007	P, I, G	Auxiliary Building	N	III	N	1.0×10^{-11} to 1.0×10^{-5}	1.0×10^{-11} to 1.0×10^{-5}	1.0×10^{-6} to 1.0×10^{3}	N/A	Yes/Yes/Yes
Aux BLDG Controlled Area I HVAC normal Exhaust ACU Inlet (offline)	PR-RE-013	P, I, G	Auxiliary Building	N	II	N	1.0×10^{-11} to 1.0×10^{2}	1.0×10^{-11} to 1.0×10^{2}	1.0×10^{-6} to 1.0×10^{3}	N/A	Yes/Yes/Yes
Aux BLDG Controlled Area II HVAC normal Exhaust ACU Inlet (offline)	PR-RE-014	P, I, G	Auxiliary Building	N	II	N	1.0×10^{-11} to 1.0×10^{2}	1.0×10^{-11} to 1.0×10^{2}	1.0×10^{-6} to 1.0×10^{3}	N/A	Yes/Yes/Yes
Aux BLDG Controlled Area I HVAC Normal Exhaust ACU Effluent (offline)	PR-RE-015	Sampler (P,I)	Auxiliary Building	N	II	N	Sampler	Sampler	N/A	N/A	No/No/No
Aux BLDG Controlled Area II HVAC Normal Exhaust ACU Effluent (offline)	PR-RE-016	Sampler (P,I)	Auxiliary Building	N	II	N	Sampler	Sampler	N/A	N/A	No/No/No
Aux BLDG Controlled Area I HVAC Emergency Exhaust ACU Inlet (offline)	PR-RE-017	P, I, G	Auxiliary Building	N	II	N	1.0×10^{-11} to 1.0×10^{2}	1.0×10^{-11} to 1.0×10^{2}	1.0×10^{-6} to 1.0×10^{3}	N/A	Yes/Yes/Yes
Aux BLDG Controlled Area II HVAC Emergency Exhaust ACU Inlet (offline)	PR-RE-018	P, I, G	Auxiliary Building	N	II	N	1.0×10^{-11} to 1.0×10^{2}	1.0×10^{-11} to 1.0×10^{2}	1.0×10^{-6} to 1.0×10^{3}	N/A	Yes/Yes/Yes
Aux BLDG Controlled Area I HVAC Emergency Exhaust ACU Effluent (offline)	PR-RE-019	Sampler (P,I)	Auxiliary Building	N	II	N	Sampler	Sampler	N/A	N/A	No/No/No
Aux BLDG Controlled Area II HVAC Emergency Exhaust ACU Effluent (offline)	PR-RE-020	Sampler (P,I)	Auxiliary Building	N	II	N	Sampler	Sampler	N/A	N/A	No/No/No
Containment Purge Effluent (offline)	PR-RE-037N01 PR-RE-037N02	P, I, G	Auxiliary Building	N	II	N	1.0×10^{-11} to 1.0×10^{2}	1.0×10^{-11} to 1.0×10^{2}	1.0×10^{-6} to 1.0×10^{5}	N/A	Yes/Yes/Yes
Containment Air (offline)	PR-RE-039A	P, I, G	Auxiliary Building	3	I	A	1.0×10^{-10} to 1.0×10^{-3}	1.0×10^{-9} to 1.0×10^{-3}	1.0×10^{-6} to 1.0×10^{1}	N/A	Yes/Yes/Yes

Table 2.7.6.4-1 (2 of 4)

Description	Tag No	Monitor Type (2)	Location	Class (3)			Range (μC/cc) (4)				Display & Alarm at MCR/RSR/ Local
				S	SE	E	Particulate Gross β	I-131 γ	Gas Gross β	Liquid Gross γ	
Containment Air (offline)	PR-RE-040B	P, I, G	Auxiliary Building	3	I	B	1.0×10^{-10} to 1.0×10^{-3}	1.0×10^{-9} to 1.0×10^{-3}	1.0×10^{-6} to 1.0×10^{1}	N/A	Yes/Yes/Yes
Fuel Handling Area HVAC Effluent (offline)	PR-RE-043	P, I, G	Auxiliary Building	N	II	N	1.0×10^{-11} to 1.0×10^{-5}	1.0×10^{-11} to 1.0×10^{-5}	1.0×10^{-6} to 1.0×10^{3}	N/A	Yes/Yes/Yes
Condenser Vacuum Pump Vent Effluent (offline)	PR-RE-063	Gas & Sampler (P, I)	Turbine Building	N	III	N	Sampler	Sampler	1.0×10^{-6} to 1.0×10^{-1}	N/A	Yes/Yes/Yes
Main Control Room Air Intake (inline)	PR-RE-071A	Gas	Auxiliary Building	3	I	A	N/A	N/A	1.0×10^{-6} to 1.0×10^{-1}	N/A	Yes/Yes/Yes
	PR-RE-072B	Gas	Auxiliary Building	3	I	B	N/A	N/A	1.0×10^{-6} to 1.0×10^{-1}	N/A	Yes/Yes/Yes
	PR-RE-073A	Gas	Auxiliary Building	3	I	A	N/A	N/A	1.0×10^{-6} to 1.0×10^{-1}	N/A	Yes/Yes/Yes
	PR-RE-074B	Gas	Auxiliary Building	3	I	B	N/A	N/A	1.0×10^{-6} to 1.0×10^{-1}	N/A	Yes/Yes/Yes
Gaseous Radwaste System Exhaust (offline)	PR-RE-080	Gas	Compound Building	N	III	N	N/A	N/A	1.0×10^{-3} to 1.0×10^{2}	N/A	Yes/Yes/Yes
Comp. BLDG HVAC Effluent (offline)	PR-RE-082	Sampler (P,I)	Compound Building	N	III	N	Sampler	Sampler	N/A	N/A	No/No/No
Comp. BLDG Exhaust ACU Inlet (offline)	PR-RE-083	P, I, G	Compound Building	N	III	N	1.0×10^{-11} to 1.0×10^{-5}	1.0×10^{-11} to 1.0×10^{-5}	1.0×10^{-6} to 1.0×10^{2}	N/A	Yes/Yes/Yes
Comp. BLDG Hot Machine Shop ACU outlet (offline)	PR-RE-084	P, I, G	Compound Building	N	III	N	1.0×10^{-11} to 1.0×10^{-5}	1.0×10^{-11} to 1.0×10^{-5}	1.0×10^{-6} to 1.0×10^{-1}	N/A	Yes/Yes/Yes
Condensate Receiver Tank	PR-RE-103	Liquid	Auxiliary Building	N	III	N	N/A	N/A	N/A	1.0×10^{-6} to 1.0×10^{-1}	Yes/Yes/Yes
CCW Supply Header (TRN A)	PR-RE-111	Liquid	Auxiliary Building	N	II	N	N/A	N/A	N/A	1.0×10^{-6} to 1.0×10^{-1}	Yes/Yes/Yes

Table 2.7.6.4-1 (3 of 4)

Description	Tag No	Monitor Type (2)	Location	Class (3)			Range (μC/cc) (4)				Display & Alarm at MCR/RSR/ Local
				S	SE	E	Particulate Gross β	I-131 γ	Gas Gross β	Liquid Gross γ	
CCW Supply Header (TRN B)	PR-RE-112	Liquid	Auxiliary Building	N	II	N	N/A	N/A	N/A	1.0×10^{-6} to 1.0×10^{-1}	Yes/Yes/Yes
ESW PUMP Discharge Header (TRN A)	PR-RE-113	Liquid	CCW HX Building	N	II	N	N/A	N/A	N/A	1.0×10^{-6} to 1.0×10^{-1}	Yes/Yes/Yes
ESW PUMP Discharge Header (TRN B)	PR-RE-114	Liquid	CCW HX Building	N	II	N	N/A	N/A	N/A	1.0×10^{-6} to 1.0×10^{-1}	Yes/Yes/Yes
Condensate Polishing Area Sump Water	PR-RE-164	Liquid	Turbine Building	N	III	N	N/A	N/A	N/A	1.0×10^{-6} to 1.0×10^{-1}	Yes/Yes/Yes
Liquid Radwaste System Effluent	PR-RE-183	Liquid	Compound Building	N	III	N	N/A	N/A	N/A	1.0×10^{-6} to 1.0×10^{-1}	Yes/Yes/Yes
	PR-RE-184	Liquid	Compound Building	N	III	N	N/A	N/A	N/A	1.0×10^{-6} to 1.0×10^{-1}	Yes/Yes/Yes
Steam Generator Blowdown	PR-RE-104	Liquid	Auxiliary Building	N	II	N	N/A	N/A	N/A	1.0×10^{-6} to 1.0×10^{-1}	Yes/Yes/Yes
CVCS Letdown	CV-RE-204	Liquid	Auxiliary Building	N	II	N	N/A	N/A	N/A	1.0×10^{-4} to 1.0×10^{2}	Yes/No/No
CVCS Gas Stripper Effluent	CV-RE-265	Liquid	Auxiliary Building	N	II	N	N/A	N/A	N/A	1.0×10^{-4} to 1.0×10^{1}	Yes/No/No
Steam Generator 1 Downcomer	PR-RE-185	Liquid	Compound Building	N	III	N	N/A	N/A	N/A	1.0×10^{-6} to 1.0×10^{-1}	Yes/Yes/Yes
Steam Generator 2 Downcomer	PR-RE-186	Liquid	Compound Building	N	III	N	N/A	N/A	N/A	1.0×10^{-6} to 1.0×10^{-1}	Yes/Yes/Yes
Fire pump and water/wastewater treatment building	PR-RE-190	Liquid	Waste Water Treatment Building	N	III	N	N/A	N/A	N/A	1.0×10^{-7} to 1.0×10^{-1}	Yes/Yes/Yes

Table 2.7.6.4-1 (4 of 4)

Description	Tag No	Monitor Type (2)	Location	Class (3)			Range (μC/cc) (4)					Display & Alarm at MCR/RSR/ Local
				S	SE	E	Particulate Gross β	I-131 γ	Gas Gross β	Liquid Gross γ	Area	
Main Steam Line	PR-RE-217	Gas (N-16)	Auxiliary Building	N	II	N	N/A	N/A	N/A	N/A	2.7×10^{-9} to 2.7×10^{-3} (Note 1)	Yes/Yes/Yes
	PR-RE-218	Gas (N-16)	Auxiliary Building	N	II	N	N/A	N/A	N/A	N/A	2.7×10^{-9} to 2.7×10^{-3} (Note 1)	Yes/Yes/Yes
	PR-RE-219	Gas (N-16)	Auxiliary Building	N	II	N	N/A	N/A	N/A	N/A	2.7×10^{-9} to 2.7×10^{-3} (Note 1)	Yes/Yes/Yes
	PR-RE-220	Gas (N-16)	Auxiliary Building	N	II	N	N/A	N/A	N/A	N/A	2.7×10^{-9} to 2.7×10^{-3} (Note 1)	Yes/Yes/Yes
Condenser pit sump water	PR-RE-165	Liquid	Turbine Building	(5)	(5)	(5)	N/A	N/A	N/A	1.0×10^{-6} to 1.0×10^{-1}	N/A	Yes/Yes/Yes
	PR-RE-167	Liquid	Turbine Building	(5)	(5)	(5)	N/A	N/A	N/A	1.0×10^{-6} to 1.0×10^{-1}	N/A	Yes/Yes/Yes
CCW heat exchanger building sump	PR-RE-166	Liquid	CCW HX Building	(5)	(5)	(5)	N/A	N/A	N/A	1.0×10^{-6} to 1.0×10^{-1}	N/A	Yes/Yes/Yes
	PR-RE-168	Liquid	CCW HX Building	(5)	(5)	(5)	N/A	N/A	N/A	1.0×10^{-6} to 1.0×10^{-1}	N/A	Yes/Yes/Yes

(1) Detector type for area radiation monitor is GM tube or ionization chamber.
(2) Monitor Type
P: Particulate, I : Iodine, G: Noble gas, Liquid
(3) S = Safety Class per ANSI/ANS 51.1: 1 = SC-1, 2 = SC-2, 3 = SC-3, N = NNS
SE = Seismic Category: I, II, III
E = Electrical Class: A, B, C, D = Class 1E Separation Division, N = Non-Class 1E
(4) Detector type and calibration nuclide for each measurement:
Particulate Gross β = β scintillator with Cs-137
Gas Gross β = β scintillator with Kr-85
Liquid Gross γ = γ scintillator with Cs-137
Iodine γ = γ scintillator with Ba-133
(5) The COL applicant is to determine the safety class (COL 11.5(9)).

Table 2.7.6.4-2

Engineered Safety Features Actuation System Initiation Conditions

Control Room Emergency Ventilation Actuation Signal
• High Radiation of MCR Intake Air

Table 2.7.6.4-3 (1 of 3)

Process and Effluent Radiation Monitoring and Sampling System ITAAC

Design Commitment	Inspections, Tests, Analyses	Acceptance Criteria
1. The functional arrangement of the PERMSS is as described in the Design Description of Subsection 2.7.6.4.1 and in Table 2.7.6.4-1.	1. Inspection of the as-built PERMSS will be conducted.	1. The as-built PERMSS conforms with the functional arrangement as described in the Design Description of Subsection 2.7.6.4.1 and in Table 2.7.6.4-1.
2. The PERMSS has components that provide radiation monitoring of gaseous and liquid processing systems.	2. Inspections will be performed to verify that the as-built gaseous and liquid processing systems are provided with radiation monitoring.	2. The components of radiation monitoring exist in gaseous and liquid processing systems of the as-built PERMSS.
3. Displays and alarms exist and are retrievable in the MCR and RSR as defined in Table 2.7.6.4-1.	3. Test of the as-built PERMSS will be performed on the displays and alarms in the MCR and RSR.	3. Displays and alarms exist and can be retrieved in the as-built MCR and RSR as defined in Table 2.7.6.4-1.
4. Each PERMSS channel monitors the radiation level in its assigned area, and indicates its respective MCR alarm and local audible and visual alarm when the radiation level reaches a preset level.	4. Testing of each channel of the as-built PERMSS will be conducted using simulated input signals for an alarm setpoint check.	4. MCR and local alarms are initiated when the simulated radiation level reaches a preset limit.
5. The safety-related divisionalized cabinet (SRDC) of the PERMSS provides an automatic ESFAS signals for each loop including the final component, as shown on Table 2.7.6.4-2.	5. A testing of the each loop including the final component and the SRDC of the as-built PERMSS will be performed using a simulated signal by observing the final actuated component at the actuation set point to verify that the SRDC and the system function as required.	5. As-built ESFAS initiation signal from SRDC is sent through ESF-CCS group controller cabinet to the final actuated component upon detection of high radiation of the MCR intake defined in Table 2.7.6.4-2, if the simulated radiation level exceeds predetermined setpoints for control room emergency ventilation actuation signal (CREVAS).

Table 2.7.6.4-3 (2 of 3)

Design Commitment	Inspections, Tests, Analyses	Acceptance Criteria
6. The seismic Category I monitors identified in Table 2.7.6.4-1, including the supports and anchorages, can withstand seismic design basis loads without loss of safety function.	6.a. Inspections will be performed to verify that the as-built seismic Category I monitor identified in Table 2.7.6.4-1 is located in seismic Category I structure	6.a. The as-built seismic Category I monitor identified in Table 2.7.6.4-1 is located in a seismic Category I structure.
	6.b. Type test, analyses, or a combination of type tests and analyses of seismic Category I monitor identified in Table 2.7.6.4-1 will be performed.	6.b. A report exists and concludes that the seismic Category I monitor identified in Table 2.7.6.4-1 withstands seismic design basis loads without loss of safety function.
	6.c. Inspections and analyses will be performed to verify that the as-built seismic Category I monitor identified in Table 2.7.6.4-1, including the supports and anchorages, is seismically bounded by the tested or analyzed conditions.	6.c. A report exists and concludes that the seismic Category I monitor identified in Table 2.7.6.4-1, including the supports and anchorages, is seismically bounded by the tested or analyzed conditions.
7. Physical separation and electrical isolation are provided (1) between Class 1E divisions, and (2) between Class 1E divisions and non-Class 1E divisions.	7. Inspection of the as-built Class 1E divisions will be performed.	7. Physical separation and electrical isolation exist in accordance with NRC RG 1.75 (1) between Class 1E divisions, and (2) between class 1E divisions and non-class 1E divisions.
8. The steam generator blowdown radiation monitor provides an alarm in the MCR of high radioactive contamination and isolation signal to blowdown valve	8. A signal test is conducted to verify the radiation monitor setpoint and alarm and isolation functions in the MCR.	8. Upon detection of high radiation levels above the predetermined setpoint, the steam generator blowdown monitor provides an alarm in the MCR and closes the blowdown valve, isolating the blowdown system.
9. Each monitor channel function of PERMSS identified in Table 2.7.6.4-1 is functioning.	9. Testing of each channel of the as-built PERMSS will be conducted using a radiation check source with fixed source strength to activate the channel.	9. Each monitor channel is functioning (alive) when the built-in radiation check source is remotely activated by the operator.

Table 2.7.6.4-3 (3 of 3)

Design Commitment	Inspections, Tests, Analyses	Acceptance Criteria
10. The containment air radiation monitor non-metallic parts, materials, and lubricants used in safety-related mechanical equipment perform their safety-related function up to the end of their qualified life in the design basis harsh environmental conditions (internal service conditions) experienced during normal operations, anticipated operational occurrences, design-basis accidents, and post accident conditions.	10. A type test or a combination of type test and analysis will be performed the containment air radiation monitor non-metallic parts, materials, and lubricants used in safety-related mechanical equipment.	10. A report exists and concludes that the containment air radiation monitor non-metallic parts, materials, and lubricants used in safety-related mechanical equipment perform their safety-related function up to the end of their qualified life under the design basis harsh environmental conditions (internal service conditions) experienced during normal operations, anticipated operational occurrences, designbasis accidents, and post accident conditions.

2.7.6.5 Area Radiation Monitoring System

2.7.6.5.1 Design Description

The area radiation monitoring system (ARMS) monitors the radiation levels in selected areas throughout the plant. The area monitors warn operators and station personnel of the visible and audible alarm when unusual radiological events occur.

Components of the ARMS are located in the containment building, the auxiliary building, and the compound building.

1. The functional arrangement of the ARMS is described in the Design Description of Subsection 2.7.6.5.1 and in Table 2.7.6.5-1.

2. The ARMS identified in table 2.7.6.5-1 provides for the indication, alarm, and recording of the defined plant area radiation levels within the MCR and RSR for operating personnel.

3. The monitors provide local readout and alarm units at the detector locations.

4. Physical separation and electrical isolation are provided (1) between Class 1E divisions, and (2) between Class 1E divisions and non-Class 1E divisions.

5. The seismic Category I monitors of the ARMS identified in Table 2.7.6.5-1 can withstand seismic design basis loads without loss of safety function.

6. The safety-related divisionalized cabinet (SRDC) of the ARMS provides an automatic ESFAS initiation signals for each loop including the final component, as shown in Table 2.7.6.5-2.

7. The containment monitors are located in a location for each intended function as follows:

   - Upper area monitor (RE-234B) is located level just below the containment polar crane for a direct, unimpeded exposure path of the entire containment free air volume. RE-233A is located to accommodate operator's easy access, but still at an elevation that provides observation of a large fraction of the containment free air volume.

- Lower area monitors (RE-231A and 232B) are located directly overhead with an unimpeded view of the refueling pool to detect fuel handling accident condition.

8. The Class 1E components and instruments identified in Table 2.7.6.5-1 as being qualified for a harsh environment (and the associated wiring, cables, and terminations) are capable of withstanding the environmental conditions that would exist before, during, and following a design basis accident without loss of safety function for the time required to perform the safety function.

9. Each monitor channel of ARMS identified in table 2.7.6.5-1 is functioning.

2.7.6.5.2 Inspections, Tests, Analyses, and Acceptance Criteria

The ITAAC for the area radiation monitoring system is described on Table 2.7.6.5-3.

Table 2.7.6.5-1

Area Radiation Monitoring System Components List

Description	Tag No	Class (1) S	SE	E	Harsh Environment Qualified	Range (mSv/hr)	Display & Alarm at MCR/RSR/ Local
Post Accident Primary Sample Room	RE-205	N	III	N	No	10^{-3}~10^{2}	Yes/Yes/Yes
Normal Primary Sample Room	RE-285	N	III	N	No	10^{-3}~10^{2}	Yes/Yes/Yes
Main Steam & FW Containment Piping Penetration Area	RE-237 RE-238	N	II	N	No	10^{0}~10^{5}	Yes/Yes/Yes
Containment Operating Area	RE-231A RE-232B	3	I	A B	Yes	10^{-3}~10^{2}	Yes/Yes/Yes
Containment Upper Operating Area	RE-233A RE-234B	3	I	A B	Yes	10^{1}~10^{8}	Yes/Yes/Yes
Incore Instrument	RE-235	N	II	N	No	10^{-3}~10^{2}	Yes/Yes/Yes
Containment Personnel Access Hatch Area	RE-236	N	II	N	No	10^{-3}~10^{2}	Yes/Yes/Yes
Spent Fuel Pool Area	RE-241A RE-242B	3	I	A B	No	10^{-3}~10^{2}	Yes/Yes/Yes
New Fuel Storage Area	RE-245	N	II	N	No	10^{-3}~10^{2}	Yes/Yes/Yes
Hot Machine Shop	RE-293	N	III	N	No	10^{-3}~10^{2}	Yes/Yes/Yes
Radiochemistry Lab	RE-257	N	III	N	No	10^{-3}~10^{2}	Yes/Yes/Yes
Main Control Room Area	RE-275	N	II	N	No	10^{-3}~10^{2}	Yes/Yes/Yes
TSC Area	RE-279	N	III	N	No	10^{-3}~10^{2}	Yes/Yes/Yes
Truck Bay Area	RE-288 RE-289	N	III	N	No	10^{-3}~10^{2}	Yes/Yes/Yes
Waste Drum Storage Area	RE-292	N	III	N	No	10^{-3}~10^{2}	Yes/Yes/Yes
Compound Building Dry Active Waste Storage Area	RE-284	N	III	N	No	10^{-3}~10^{2}	Yes/Yes/Yes

(1) S : Safety Class per ANSI/ANS-51.1; 1=SC-1, 2=SC-2, 3=SC-3, N=NNS
SE : Seismic Category; I, II, III
E : Electrical Class ; A, B, C, D=Class 1E Separation Division, N=Non-Class 1E

Table 2.7.6.5-2

Engineered Safety Features Actuation System Initiation Conditions

Containment Purge Isolation Actuation Signal • High Radiation of the Containment Operation Area (RE-231A, 232B) • High Radiation of the Containment Upper Operating Area (RE-233A, 234B) Fuel Handling area Emergency Ventilation Actuation Signal • High Radiation of Spent Fuel Pool Area (RE-241A, 242B)

Table 2.7.6.5-3 (1 of 4)

Area Radiation Monitoring System ITAAC

Design Commitment	Inspections, Tests, Analyses	Acceptance Criteria
1. The functional arrangement of the ARMS is as described in the Design Description of Subsection 2.7.6.5.1 and in Table 2.7.6.5-1.	1. Inspection of the as-built ARMS will be conducted.	1. The as-built ARMS conforms with the functional arrangement as described in the Design Description of Subsection 2.7.6.5.1 and in Table 2.7.6.5-1.
2. The ARMS identified in table 2.7.6.5-1 provides for the indication, alarm, and recording of the defined plant area radiation levels within the MCR and RSR for operating personnel.	2. Test of the as-built ARMS components will be performed using a simulated radiation signal.	2. Each of the area radiation monitors identified in Table 2.7.6.5-1 provides operating personnel with an indication and record of the radiation level which corresponds to the simulated radiation signal. MCR and RSR alarms are initiated when the simulated radiation signal reaches a preset limit.
3. The monitors provide local readout and alarm units at the detector locations.	3. Testing of local readout and alarm units at the as-built detectors will be conducted.	3. Local alarms are initiated when the simulated radiation level reaches a preset limit. Both audible and visual alarms are included for each local readout/alarm unit.
4. Physical separation and electrical isolation are provided (1) between Class 1E divisions, and (2) between Class 1E divisions and non-Class 1E divisions.	4. Inspection of the as-built Class 1E divisions will be performed.	4. Physical separation and electrical isolation exist in accordance with NRC RG 1.75 (1) between Class 1E divisions, and (2) between Class 1E divisions and non-Class 1E divisions.
5. The seismic Category I monitors of the ARMS identified in Table 2.7.6.5-1 can withstand seismic design basis loads without loss of safety function.	5.a. Inspections will be performed to verify that the as-built seismic Category I monitor identified in Table 2.7.6.5-1 is located in a seismic Category I structure(s).	5.a. The as-built seismic Category I monitor identified in Table 2.7.6.5-1 is located in a seismic Category I structure(s).

Table 2.7.6.5-3 (2 of 4)

Design Commitment	Inspections, Tests, Analyses	Acceptance Criteria
5. (cont.)	5.b. Type test, analyses, or a combination of type tests and analyses of seismic Category I monitor identified in Table 2.7.6.5-1 will be performed.	5.b. A report exists and concludes that the seismic Category I monitor identified in Table 2.7.6.5-1 withstands seismic design basis loads without loss of safety function.
	5.c. Inspections and analyses will be performed to verify that the as-built seismic Category I monitor identified in Table 2.7.6.5-1, including the supports and anchorages, is seismically bounded by the tested or analyzed conditions.	5.c. A report exists and concludes that the seismic Category I monitor identified in Table 2.7.6.5-1, including the supports and anchorages, is seismically bounded by the tested or analyzed conditions.
6. The safety-related divisionalized cabinet (SRDC) of the ARMS provides an automatic ESFAS signals for each loop including the final component, as shown in Table 2.7.6.5-2.	6. A Testing of the each loop including the final component and the SRDC of the as-built ARMS will be performed using a simulated signal by observing the final actuated component at the actuation setpoint to verify that the SRDC and the system function as required.	6. Each as-built ESFAS initiation signal from SRDC is sent through ESF-CCS group controller cabinet to the final actuated component upon detection of high radiation of containment operating area and fuel handling area defined in Table 2.7.6.5-2, if the simulated radiation level exceeds predetermined setpoints for containment purge isolation actuation signal (CPIAS) and fuel handling area emergency ventilation actuation signal (FHEVAS).

Table 2.7.6.5-3 (3 of 4)

Design Commitment	Inspections, Tests, Analyses	Acceptance Criteria
7. The containment monitors are located in an unimpeded location for each intended function as follows: - Upper area monitor (RE-234B) is located level just below the containment polar crane for a direct, unimpeded exposure path of the entire containment free air volume. RE-233A is located to accommodate operator's easy access, but still at an elevation that provides observation of a large fraction of containment free air volume. - Lower area monitors (RE-231A and 232B) are located directly overhead with an unimpeded view of the refueling pool to detect a fuel handling accident condition.	7. Inspections will be performed to verify that containment monitors are located in an unimpeded location for each intended function.	7. As-built containment monitors are located in an unimpeded location for each intended function described in the design commitment.

Table 2.7.6.5-3 (4 of 4)

Design Commitment	Inspections, Tests, Analyses	Acceptance Criteria
8. The Class 1E components and instruments identified in Table 2.7.6.5-1 as being qualified for a harsh environment (and the associated wiring, cables, and terminations) are capable of withstanding the environmental conditions that would exist before, during, and following a design basis accident without loss of safety function for the time required to perform the safety function.	8.a Type tests or a combination of type tests and analyses will be performed on Class 1E components and instruments located in a harsh environment.	8.a A report exists and concludes that the Class 1E components and instruments identified in Table 2.7.6.5-1 as being qualified for a harsh environment are capable of withstanding the environmental conditions that would exist before, during, and following a design basis accident without loss of safety function for the time required to perform the safety function.
	8.b Inspections will be performed on the as-built Class 1E components and instruments (and the associated wiring, cables, and terminations) located in a harsh environment.	8.b A report exists and concludes that the as-built Class 1E components and instruments identified in Table 2.7.6.5-1 as being qualified for a harsh environment (and the associated wiring, cables, and terminations) are bounded by type tests or a combination of type tests and analyses.
9. Each monitor channel of ARMS identified in table 2.7.6.5-1 is functioning.	9. Testing of each channel of the as-built ARMS will be conducted using the radiation check source with fixed source strength to activate the channel.	9. Each monitor channel is functioning (alive) when the built-in radiation check source is remotely activated by the operator.

2.8 Radiation Protection

2.8.1 Design Description

Radiation protection design features in the APR1400 provide the limitation of radiation exposures to plant personnel and to the public complying with the NRC RG and as low as reasonably achievable (ALARA) principles.

The design commitments for radiation protection are as follows:

1. Shielding design of rooms, corridors, cubicles, labyrinth access, and operating areas is commensurate with the minimum shielding requirements for significant radiation sources.

2. Ventilation systems for the radiological controlled areas are designed to keep the radiation exposure below the limits specified in 10 CFR Part 20, Appendix B.

3. Design features provide radiation protection so that operators can take actions necessary to mitigate or recover from the design basis accidents.

2.8.2 Inspections, Tests, Analyses, and Acceptance Criteria

The ITACC ensure that the target dose rates of all areas are below the limits of each area's radiation zone designations in Table 2.8-1, and Table 2.8-2 provides the ITAAC, which will be undertaken for radiation protection.

Radiation protection is to be based on the shielding design for walls and floors for individual cubicles inside RCB, AB and CB are summarized in DCD Tier 1, Tables 2.2.1-1 and 2.2.1-1a. The shield wall and floor thicknesses are designed to be the minimum for the protection of plant personnel for radiation ALARA in the corresponding radiation zone areas. Radiation protection ITAAC is to be performed in accordance with Table 2.8-2, item #1, and the wall and floor thicknesses as specified inTable 2.2.1-1 for RCB, AB and Table 2.2.1-2 for CB. In addition, the following document types are to be used for inspection and analysis of as-built shield walls and floors as applicable:

- General arrangement drawings
- Radiation zone drawings

- Radiation shield barrier drawings
- Concrete outline drawings
- Construction reports

Table 2.8-1

Radiation Zone Designations during Normal Operating Conditions Access Acceptance Criteria

Zone Designation	Design Dose Rate (mSv/hr)	Zone Description
1	DR ≤ 0.0025	Uncontrolled, Unlimited access
2	0.0025 < DR ≤ 0.025	Controlled, Limited access, 40 hr/wk
3	0.025 < DR ≤ 0.05	Controlled, Limited access, 20 to 40 hr/wk
4	0.05 < DR ≤ 0.2	Controlled, Limited access, 5 to 20 hr/wk
5	0.2 < DR ≤ 1	Controlled, Limited access, 1 to 5 hr/wk
6	1 < DR ≤ 10	Controlled access under supervision of radiation protection personnel
7	10 < DR ≤ 5,000	Controlled access under supervision of radiation protection personnel
8	DR > 5,000	Controlled access under supervision of radiation protection personnel

Table 2.8-2

Radiation Protection ITAAC

Design Commitment	Inspections, Tests, Analyses	Acceptance Criteria
1. Shielding design of rooms, corridors, cubicles, labyrinth access, and operating areas is commensurate with the minimum shielding requirements for significant radiation sources.	1. Inspections and analysis of the as-built shielding structure will be conducted in accordance with the shield barrier drawings to verify the materials of construction and the thicknesses of all shield walls and floors for confirmation of the adequacy of the shielding design in plant areas.	1. A report exists and concludes that the materials and the thicknesses of as-built shielding walls and floors ensure maximum radiation levels are maintained within the limits for Zone 1 through 8 specified in Table 2.8-1.
2. Ventilation systems for the radiological controlled areas are designed to keep the radioactivity concentration below the limits specified in 10 CFR Part 20, Appendix B.	2. Analysis will be performed to predict the airborne radioactivity concentrations and to confirm the ventilation design adequacy by considering ventilation flow rates and equipment leakages in the plant areas during normal operations.	2. Analysis exists and concludes that ventilation airflow in radiological controlled areas flows from areas of lower potential airborne contamination to areas of higher potential airborne contamination. The concentrations of airborne radionuclides shall not exceed the concentrations provided in 10 CFR Part 20, Appendix B.
3. Design features provide radiation protection so that operators can take actions necessary to mitigate or recover from the design basis accidents.	3. Analysis will be performed to predict maximum radiation exposure to the operators during the design basis accidents.	3. A report exists and concludes that maximum radiation exposure dose to operators is less than the limits specified in GDC 19.

2.9 Human Factors Engineering

2.9.1 Design Description

The human factors engineering (HFE) program ensures that human-system interface (HSI) of the main control room, remote shutdown room, technical support center, emergency operations facility, and local control stations associated with important human actions reflects state-of-the-art HFE principles, and satisfies all specific regulatory criteria and support the operator in safely operating the plant.

The HSI is designed in accordance with the HFE program to provide reasonable assurance that the HFE design is properly developed and effectively implemented to conform to NUREG-0711, Rev. 3. The HFE program objectives for the design are that the design is human-centered, it incorporates HFE principles and methods, and is developed according to a systematic top-down integrated approach in accordance with applicable requirements and performance of the HFE program element implementation plans (IPs) and results summary reports to support ITAAC closure. ITAAC is applied to the human factors verification and validation (HF V&V) for the APR1400. The HFE program and IPs are in effect at least from the start of the design cycle through completion of initial plant startup test program. The implementation plans are complete and conform to the review criteria of NUREG-0711, Rev. 3. The COL applicant is to provide a ITAAC closure schedule for implementing the V&V ITAAC. ITAAC will be closed in accordance with applicable regulatory guidance. Any changes and departures to the implementation plans will be governed by applicable regulatory guidance and requirements included with the design certification rulemaking.

The HFE program elements for ITAAC are as follows:

1. The HF V&V determines that the final HSI design conforms to accepted HFE design principles and it enables plant personnel to successfully perform their tasks to assure plant safety and operational goals.

2. The human factors design implementation verifies that the as-built design conforms to the verified and validated design resulting from the HFE design process.

The HF V&V program element is performed to confirm that the HSI design conforms to HFE design principles and that it enables plant personnel to successfully perform tasks to achieve plant safety and other operational goals. The HF V&V of the HSI design

demonstrates operator task performance capabilities and the capabilities to perform operator functions. All HF V&V activities are performed according to the HF V&V Implementation Plan and it applies to all HSIs in the main control room, remote shutdown room, and voice communications when it influences the main control room crew's performance, between the main control room and the technical support center, emergency operations facility, and other offsite emergency entities. The HF V&V also includes the HSIs on local control stations associated with the important human actions. The HF V&V consists of the following steps: (1) Sampling of operational conditions; (2) Design verification; (3) Integrated system validation (ISV); (4) Human engineering discrepancies; and (5) Documentation of results of the HF V&V program.

By applying performance-based testing of the final integrated system, the ISV validates that the final integrated design supports safe plant operation. The realistic scenarios, defined by the sampling of operating conditions, are used to determine if human errors could occur due to operational complexity or excessive task load. For ISV, it uses a method to reduce the bias due to the allocation of scenarios to the operators and the learning effect from the order in which the scenarios are run, and the test design is such that each operating team performs all scenarios. Plant participants in the ISV are trained in APR1400 plant operation and are divided into three crew teams. When the test personnel identify errors, loss of situation awareness, or work load increase conditions, these conditions are compared to the recorded plant parameters to evaluate the measure of performance. Two significant dimensions that are measured are situation awareness and workload. Measures of situation awareness include the use of the situation awareness rating tool and measures of workload use the workload rating tool and situational tool. These tools are valid, reliable and sensitive.

The situation awareness rating tool is the primary tool that is used to measure situation awareness, along with questionnaires and debriefings. The workload rating tool is used to measure the categories of workload, such as mental demand, physical demand, temporal demand, performance, effort, and frustration level. Situation awareness is used to evaluate the operator responses on each question (i.e., perception, comprehension, and projection) and it is measured using situation awareness rating tool after the scenario is complete. The data are sorted and compared with situation awareness data for a predecessor or reference plant. Appropriateness of the responses is converted into a percentage point based on a 7-point Likert scale and is compared with the value of the predecessor or reference plant using the T-test results. If the measure is equal or higher than the

predecessor or reference plant, it is determined that the situation awareness for the ISV is appropriate. The performance of the APR1400 is acceptable when it meets or exceeds the performance of predecessors.

Workload is measured using a questionnaire based on the workload rating tool that is completed at the end of the scenario, and results are compared with the results from a predecessor or reference plant. Workload analysis is performed by quantifying the operator responses to the questions (e.g. mental, physical, temporal, performance, effort, and frustration) and then comparing it with the workload values from the predecessor or reference plant. If the measure is equal or lower than that of the predecessor or reference, it is considered that the workload rate for the ISV is appropriate. The performance of the APR1400 is acceptable when it meets or exceeds the performance of predecessors.

Plant performance measures are plant process variables that are required to confirm whether the operator has checked the plant status correctly for each scenario and to verify that the operator has controlled the plant safely. For this reason, process variables are developed separately for each scenario in the ISV and are obtained through the simulator logging system. Process variable include trend graph data values recorded from the start of a scenario until the end. Suitability criteria of the plant performance measure are based on the plant's operating procedures, technical specifications and the DCD Tier 2, Chapters 7, 15, and 19. A requirement criterion is successful only if it is within the requirement range, and it has a pass/fail characteristic.

Primary task measures support the analysis of the plant performance measures and have a diagnostic characteristic. When a pass/fail requirement applies to the time measure, as when assessing credited manual actions and safe plant parameter envelopes, it is based on the amount of time required for an operator to execute an action. Time is measured for each scenario as applicable and includes the total execution time and partial execution time of tasks. Time measurements are taken from simulator history files or measured manually through observations of the HFE team. When time represents required normative criteria, a violation of the time required analysis from the DCD Tier 2, Chapters 7, 15, or 19, it is a pass/fail measure.

Secondary task measures are based on an operator survey, observation by HFE experts on the HFE team, and debriefing of the operators. The survey is completed by the operators after the scenario has ended, and HFE expert observations are used during the debriefing, with final questions included in the result summary report (ReSR). The observer survey

for secondary task measures will apply a questionnaire that will be developed later in the design process, when the final user interfaces have been completed. This will be done prior to the start of the HF V&V program. This questionnaire will be available for audit and will be included in the HF V&V ReSR. Acceptance of the performance of a secondary task is determined by averaging the points with all of 3 or less on a 7-point Likert scale with the average representing a failure.

Subjective reports of participants, based on expert judgment, are obtained through a debriefing with the operator at the completion of the ISV scenario, and through a detailed discussion about the performance of the operator tasks. Criteria for analyzing the measure are often based on expert judgment based on the operating plant experience of the SMEs and the decision process. The anthropometric and physiological survey uses a 7-point Likert scale. Operator surveys are completed by the operators when the scenario has ended. Operators are debriefed, and HFE specialist observations are recorded at the end of the scenario. The determination of the appropriateness of anthropometric and physiological measures is based on an acceptable measure of 4 points on a 7-point scale (e.g., median score agreed upon by the HFE specialists) using the data from the survey. The performance criteria for anthropometric and physiological measures have a pass/fail characteristic, and any unsatisfactory performance identified through any measure on important human actions, as listed in the treatment of important human actions ReSR, is identified as pass/fail.

2.9.2 Inspections, Tests, Analyses, and Acceptance Criteria

The ITAAC for HFE program elements are described in the Table 2.9-1.

Table 2.9-1

Human Factors Engineering ITAAC

Design Commitment	Inspections, Tests, Analyses	Acceptance Criteria
1. The control room design incorporates HFE principles that minimize the potential for operator error.	1. An Integrated System Validation Test will be performed in accordance with the Verification and Validation Implementation Plan.	1. An Integrated System Validation Report exists and concludes that acceptance criteria associated with each test scenario are satisfied upon initial performance of the scenarios or upon remediation of failures.
2. The as-built control room HSIs are consistent with the final validated design specifications.	2. An inspection of the as-built control room HSIs will be performed.	2. The as-built control room HSIs conform to the validated design with no configuration deviations.

2.10 Emergency Planning

2.10.1 Design Description

The technical support center (TSC) provides facilities for management and technical support to plant operations during emergency conditions. The operations support center (OSC) provides an assembly area where operations support personnel can assemble in an emergency. Subsections 2.7.3.1 describe a habitability of the TSC (TSC is included in control room envelope).

1. The TSC has at least 200 m^2 of floor space.
2. The TSC is located adjacent to the MCR in the auxiliary building.
3. The means exists for communications among the MCR, the TSC, the EOF, principal state and local emergency operations centers (EOCs), and radiological field assessment teams.
4. The means exists for communications from the MCR, the TSC, and the EOF to the NRC headquarters and regional office EOCs (including establishment of the emergency response data system (ERDS) between the onsite computer system and the NRC operations center).
5. The OSC is located in compound building, separate from the MCR and the TSC.
6. The OSC has equipment for voice communication with the MCR and the TSC.

2.10.2 Inspection, Tests, Analyses, and Acceptance Criteria

Table 2.10-1 specifies the inspections, tests, analyses, and associated acceptance criteria for emergency planning.

Table 2.10-1

Emergency Planning ITAAC

Design Commitment	Inspections, Tests, Analyses	Acceptance Criteria
1. The TSC has at least $200m^2$ of floor space.	1. Inspection of the as-built TSC will be performed.	1. A report exists and concludes that TSC has at least $200m^2$ of floor space.
2. The TSC is located adjacent to the MCR in the auxiliary building.	2. Inspection of the as-built TSC will be performed.	2. The TSC is adjacent to the MCR, and the walking distance from the TSC to the MCR does not exceed two minutes.
3. The means exists for communications among the MCR, the TSC, the EOF, principal state and local emergency operations centers (EOCs), and radiological field assessment teams.	3. A test of the communication systems will be performed.	3. Communications are established among the MCR, the TSC, the EOF, principal State and local EOCs, and radiological field assessment teams.
4. The means exists for communications from the MCR, the TSC, and the EOF to the NRC headquarters and regional office EOCs (including establishment of the Emergency Response Data System (ERDS) between the onsite computer system and the NRC Operations Center.)	4. A test of the communication systems will be performed.	4. Communications are established from the MCR, the TSC and the EOF to the NRC headquarters and regional office EOCs (including establishment of the ERDS between the onsite computer system and the NRC Operations Center).
5. The OSC is located in compound building, separate from the MCR and the TSC.	5. Inspection of the location of the as-built OSC will be performed.	5. The OSC is located in compound building, separate from the MCR and the TSC.
6. The OSC has equipment for voice communication with the MCR and the TSC.	6. An inspection of the as-built OSC will be performed, including a test of the equipment for voice communication.	6. The OSC voice communications equipment is installed, and voice transmission to and reception from the MCR and the TSC are accomplished.

2.11 Containment System

2.11.1 Containment Structure

2.11.1.1 Design Description

The geometric shape of the prestressed concrete containment structure is a vertically oriented cylinder topped by a hemispherical dome with no ring girder at the dome/cylinder interface.

The containment consists of a prestressed concrete shell containing unbonded tendons and reinforcement steel. Prestressing is obtained through post-tensioning – a method of prestressing in which tendons are tensioned after concrete has hardened. Reinforcing steel is provided overall in the cylinder and dome. Additional reinforcement is provided at discontinuities, such as the cylinder-basemat interface, around penetrations and openings, at buttresses, and at other areas.

The concrete shell inner surface is lined with a minimum 1/4-in. carbon steel plate that is anchored to the concrete shell and dome to provide the required pressure boundary leak tightness. The liner plate system is not designed or considered as a structural member in providing for the overall containment load resistance. The liner plate system is attached to the containment shell with an anchorage system.

The containment is designed to accommodate conditions during and following postulated accidents.

1. The reactor cavity floor area allows for the spreading of core debris, enhancing its coolability.

2. The reactor cavity has the core debris chamber to retain core debris.

3. The concrete filled slab of the reactor cavity floor protects againstcontainment liner plate melt through.

4. The containment design pressure provides over a 10% margin above the maximum calculated peak pressure for the design basis LOCA.

5. The design basis LOCA containment pressure at 24 hours after the postulated accident is less than 50% of its calculated maximum pressure.

6. The calculated subcompartment peak differential pressures do not exceed the design differential pressures.

7. The as-built containment volume, heat sink areas and compositions bound the assumptions used in the containment pressure analyses.

8. The as-built subcompartment accessway dimensions are at least as large as those assumed in the subcompartment anlayses.

2.11.1.2 Inspections, Tests, Analyses, and Acceptance Criteria

The inspection, tests, analyses, and associated acceptance criteria for the containment structure are specified in Table 2.11.1-2.

Table 2.11.1-1

Containment Design and Parameters Performance Characteristics

Design Parameter	Design value
Containment internal design pressure, kg/cm^2G (psig)	4.22 (60)
Containment design temperature, °C (°F)	143.3 (290.0)
Containment external design pressure, kg/cm^2G (psig)	0.28 (4.0)
Containment Net free volume, m^3 (ft^3)	8.8576×10^4 (3.128×10^6)
Design leak rate, First 24 hours (% free volume/day)	0.1
Design leak rate, After 1 day (% free volume/day)	0.05

Table 2.11.1-2 (1 of 2)

Containment Structure ITAAC

Design Commitment	Inspections, Tests, Analyses	Acceptance Criteria
1. The reactor cavity floor area allows for spreading of core debris, enhancing its coolability.	1. Inspections of the as-built reactor cavity will be performed.	1. A report exists and concludes that the reactor cavity area is larger than 0.02 m^2/MWt ($6.3\times10^{-8}ft^2$-h/Btu(th)), based on the design rated power.
2. The reactor cavity has the core debris chamber to retain core debris.	2. Inspections of the as-built reactor cavity will be performed.	2. A report exists and concludes that the core reactor cavity includes a core debris trap.
3. The concrete filled slab of the reactor cavity floor protects against containment liner plate melt through.	3. Inspections of the as-built reactor cavity will be performed.	3. A report exists and concludes that the thickness of concrete on the containment liner plate installed in the reactor cavity is at least 0.91 m (3 ft) with typical limestone-common-sand type concrete.
4. The containment design pressure provides over a 10% margin above the maximum calculated peak pressure for the design basis LOCA.	4. An analysis of the as-built containment pressure response to the design basis LOCA will be performed to determine the limiting peak pressure.	4. A report exists and concludes that the containment design pressure in Table 2.11.1-1 has more than 10% margin above the maximum calculated pressure for the design basis LOCA.
5. The design basis LOCA containment pressure at 24 hours after the postulated accident is less than 50 % of its calculated maximum pressure.	5. An analysis of the as-built containment pressure response to the design basis LOCA will be performed to show that the pressure at 24 hours after the postulated accident is less than 50% of its calculated peak pressure.	5. A report exists and concludes that the containment pressure at 24 hours after the accident initiation for the design basis LOCA does not exceed 50% of its calculated peak pressure.
6. The calculated subcompartment peak differential pressures do not exceed the design differential pressures.	6. An analysis of the as-built subcompartments' pressure response to a postulated line break will be performed to determine the calculated peak differential pressures.	6. A report exists and concludes that the calculated peak differential pressure does not exceed the design differential pressure for the subcompartments.

Table 2.11.1-2 (2 of 2)

Design Commitment	Inspections, Tests, Analyses	Acceptance Criteria
7. The as-built containment volume, heat sink areas and compositions bound the assumptions used in the containment pressure analyses.	7. Inspections of the as-built containment volume, heat sink areas and compositions will be performed.	7. A report exists and concludes that the as-built containment volume, heat sink areas and compositions bound the assumptions used in the containment pressure analyses.
8. The as-built subcompartment accessway dimensions are at least as large as those assumed in the subcompartment analyses.	8. Inspections of the as-built subcompartment accessway dimensions will be performed.	8. A report exists and concludes that the as-built subcompartment accessway dimensions are at least as large as those assumed in the subcompartment analyses.

2.11.2 Containment Spray System

2.11.2.1 Design Description

The containment spray system (CSS) is a safety-related system. It removes heat and reduces the concentration of radionuclides released from the containment atmosphere and transfers the heat to the component cooling water system following events which increase containment temperature and pressure. The CSS also remove heat from the in-containment refueling water storage tank (IRWST).

The CSS is located in the auxiliary building and the containment.

1. The functional arrangement of the CSS is as described in the Design Description of Subsection 2.11.2.1 and in Table 2.11.2-1 and as shown in Figure 2.11.2-1.

2.a The ASME Code components identified in Table 2.11.2-2 are designed and constructed in accordance with ASME Section III requirements.

2.b The ASME Code piping, including supports, identified in Table 2.11.2-1 is designed and constructed in accordance with ASME Section III requirements.

3.a Pressure boundary welds in ASME Code components identified in Table 2.11.2-2 meet ASME Section III requirements.

3.b Pressure boundary welds in ASME Code piping identified in Table 2.11.2-1 meet ASME Section III requirements.

4.a The ASME Code components identified in Table 2.11.2-2 retain their pressure boundary integrity at their design pressure.

4.b The ASME Code piping identified in Table 2.11.2-1 retains its pressure boundary integrity at its design pressure.

5.a The seismic Category I components and instruments identified in Tables 2.11.2-2 and 2.11.2-3, including the supports and anchorages, withstand seismic design basis loads without loss of safety function.

5.b The seismic Category I piping, including supports, identified in Table 2.11.2-1 withstand seismic design basis loads without loss of safety function.

6.a The Class 1E components and instruments identified in Tables 2.11.2-2 and 2.11.2-3 as being qualified for a harsh environment (and the associated wiring, cables, and terminations) withstand the environmental conditions that would exist before, during, and following a design basis accident without loss of safety function for the time required to perform the safety function.

6.b Each of the Class 1E components and instruments identified in Tables 2.11.2-2 and 2.11.2-3 is powered from its respective Class 1E division.

6.c Physical separation and electrical isolation are provided (1) between Class 1E divisions, and (2) between Class 1E divisions and non-Class 1E divisions.

7.a The CSS safety-related valves are designed and qualified to perform their safety-related function under the full range of fluid flow, differential pressure, electrical, and temperature conditions with debris-laden coolant fluids up to and including design basis accident conditions.

7.b After loss of motive power, MOVs identified in Table 2.11.2-2 assume the indicated loss of motive power position.

8.a Controls exist in the MCR to start and stop the CSS pumps, and to open and close the MOVs identified in Table 2.11.2-2.

8.b Controls exist in the RSR to start and stop the CSS pumps, and to open and close the MOVs identified in Table 2.11.2-2.

8.c Displays and alarms exist and are retrievable in the MCR as defined in Tables 2.11.2-2 and 2.11.2-3.

8.d Displays and alarms exist and are retrievable in the RSR as defined in Tables 2.11.2-2 and 2.11.2-3.

9. Two mechanical divisions of the CSS (A & B) are physically separated.

10. The CSS safety-related pumps are functionally designed and qualified to perform their safety-related function under the full range of fluid flow, differential pressure, electrical, and temperature conditions with debris laden coolant fluids up to and including design basis accident conditions.

11. The CSS pumps have sufficient net positive suction head (NPSH).

12. The CSS has heat removal capacity to control the containment atmosphere temperature and pressure.

13. The pumps identified in Table 2.11.2-2 can perform their safety functions under expected ranges of fluid flow, pump head, electrical, and temperature conditions up to and including design-basis conditions.

14. The containment heat removal function of the CSS will not be impaired by gas entrainment based on monitoring and venting at pre-determined intervals.

15. The CSS non-metallic parts, materials, and lubricants used in safety-related mechanical equipment perform their safety-related function up to the end of their qualified life in the design basis harsh environmental conditions (both internal service conditions and external environmental conditions) experienced during normal operations, anticipated operational occurrences, design-basis accidents, and post accident conditions.

2.11.2.2 Inspections, Tests, Analyses, and Acceptance Criteria

The inspection, tests, analyses, and associated acceptance criteria for the CSS are specified in Table 2.11.2-4.

The ITAAC related to the CIVs and the piping between the CIVs of the CSS are described in Table 2.11.3-2.

Table 2.11.2-1

Containment Spray System Equipment and Piping Location/Characteristics

Equipment and Piping Name	Location	ASME Section III Class	Seismic Category
All CS pumps, CS heat exchangers, CS pump miniflow heat exchangers, CSS piping and valves including the valves interfacing with a lower classification piping outside containment	Auxiliary Building	2	I
Containment Spray Nozzles	Containment	2	I

Table 2.11.2-2 (1 of 2)

Containment Spray System Components List

Component Name	Item No.	ASME Section III Class	Seismic Category	Class 1E/ Harsh Envir. Qual.	Display/ Control at MCR	Display/ Control at RSR	Control Signal	Active Safety Function	Loss of Motive Power Position
Containment Spray Pump 1, 2	CS - PP01A, PP01B	2	I	Yes/Yes	Yes/Yes	Yes/Yes	SIAS/ CSAS	Running	-
Containment Spray Heat Exchanger	CS - HE01A, HE01B	2	I	-	-	-	-	-	-
Containment Spray Miniflow Heat Exchanger	CS - HE02A, HE02B	2	I	-	-/-	-/-	-	-	-
Containment Spray Nozzles	-	2	I	-	-/-	-/-	-	-	-
Containment Spray Header Block Valve (MOV)	CS -V001, V002	2	I	Yes/Yes	Yes/Yes	Yes/Yes	CSAS	Open	As-Is
Containment Spray Header Isolation Valve (MOV)	CS -V003, V004	2	I	Yes/Yes	Yes/Yes	Yes/Yes	CSAS	Open	As-Is
Containment Spray Header Check Valve	CS -V1007, V1008	2	I	-	-/-	-/-	-	Open/ Closed	-
CSP Discharge Check Valve	CS - V1001, V1002	2	I	-	-/-	-/-	-	Open/ Closed	-

Table 2.11.2-2 (2 of 2)

Component Name	Item No.	ASME Section III Class	Seismic Category	Class 1E/ Harsh Envir. Qual.	Display/ Control at MCR	Display/ Control at RSR	Control Signal	Active Safety Function	Loss of Motive Power Position
CS IRWST Return Line Flow Control Valve (MOV)	CS - V005, V006	2	I	Yes/Yes	Yes/Yes	Yes/Yes	No	Closed	As-Is
CS IRWST Return Line Isolation Valve (MOV)	CS - V007, V008	2	I	Yes/Yes	Yes/Yes	Yes/Yes	-	Closed	As-Is
ECSBS Spray Header Isolation Valve (Manual)	CS - V1013	2	I	-/-	-/-	-/-	-	-	-
ECSBS Spray Header Check Valve	CS -V1014	2	I	-/Yes	-/-	-/-	-	Closed	-
CS Heat Exchanger Relief Valve	CS - V1005, V1006	2	I	-/Yes	-/-	-/-	-	Open/ Closed	-

(1) Dash(-) indicates not applicable.

Table 2.11.2-3

Containment Spray System Instruments List

Instrument Name	Item No.	Location	ASME Section III Class	Seismic Category	Class 1E/ Harsh Envir. Qual.	Display/ Alarm at MCR	Display/ Alarm at RSR
Pump Flow	F-338,348	Auxiliary Building	-	I	Yes/Yes	Yes/No	Yes/No
CS Heat Exchanger Outlet Temperature	T-071, 072	Auxiliary Building	-	I	Yes/Yes	Yes/No	Yes/No
IRWST Return Line Flow Control Valve Position	CS-V005,006	Auxiliary Building	-	I	Yes/Yes	Yes/No	Yes/No
CS Pump Suction Pressure	P-051, 061	Auxiliary Building	-	I	Yes/Yes	Yes/Yes	Yes/Yes
CS Pump Discharge Pressure	P-071, 081	Auxiliary Building	-	I	Yes/Yes	Yes/Yes	Yes/Yes
Containment Pressure	P-352A, 352B, 352C, 352D	Containment Building	-	I	Yes/Yes	Yes/Yes	Yes/No

(1) Dash(-) indicates not applicable.

Table 2.11.2-4 (1 of 8)

Containment Spray System ITAAC

Design Commitment	Inspections, Tests, Analyses	Acceptance Criteria
1. The functional arrangement of the CSS is as described in the Design Description of Subsection 2.11.2.1 and in Table 2.11.2-1 and as shown in Figure 2.11.2-1.	1. Inspection of the as-built CSS system will be conducted.	1. The as-built CSS conforms with the functional arrangement as described in the Design Description of Subsection 2.11.2.1 and in Table 2.11.2-1 and as shown in Figure 2.11.2-1.
2.a The ASME Code components identified in Table 2.11.2-2 are designed and constructed in accordance with ASME Section III requirements.	2.a Inspection of the as-built ASME Code components identified in Table 2.11.2-2 will be performed and documented in the ASME data report(s).	2.a The ASME Section III data report(s) exist and conclude that the as-built ASME Code components identified in Table 2.11.2-2 are designed and constructed in accordance with ASME Section III requirements.
2.b The ASME Code piping, including supports, identified in Table 2.11.2-1 is designed and constructed in accordance with ASME Section III requirements.	2.b Inspection of the as-built ASME Code piping, including supports, identified in Table 2.11.2-1 will be performed and documented in the ASME data report(s).	2.b The ASME Section III data report(s) exist and conclude that the as-built ASME Code piping, including supports, identified in Table 2.11.2-1 is designed and constructed in accordance with ASME Section III requirements.
3.a Pressure boundary welds in ASME Code components identified in Table 2.11.2-2 meet ASME Section III requirements.	3.a Inspections of the as-built pressure boundary welds in ASME Code components identified in Table 2.11.2-2 will be performed in accordance with the ASME Section III.	3.a A report exists and concludes that the ASME Section III requirements are met for non-destructive examination of the as-built pressure boundary welds in ASME Code components identified in Table 2.11.2-2.
3.b Pressure boundary welds in ASME Code piping identified in Table 2.11.2-1 meet ASME Section III requirements.	3.b Inspections of the as-built pressure boundary welds in ASME Code piping identified in Table 2.11.2-1 will be performed in accordance with the ASME Section III.	3.b A report exists and concludes that the ASME Section III requirements are met for non-destructive examination of the as-built pressure boundary welds in ASME Code piping identified in Table 2.11.2-1.

Table 2.11.2-4 (2 of 8)

Design Commitment	Inspections, Tests, Analyses	Acceptance Criteria
4.a The ASME Code components identified in Table 2.11.2-2 retain their pressure boundary integrity at their design pressure.	4.a A hydrostatic test will be conducted on the as-built ASME Code components identified in Table 2.11.2-2 required to be hydrostatically tested by the ASME Section III.	4.a A report exists and concludes that the results of the hydrostatic test of the as-built ASME Code components identified in Table 2.11.2-2 conform with ASME Section III requirements.
4.b The ASME Code piping identified in Table 2.11.2-1 retains its pressure boundary integrity at its design pressure.	4.b A hydrostatic test will be conducted on the as-built ASME Code piping identified in Table 2.11.2-1 required to be hydrostatically tested by the ASME Section III.	4.b A report exists and concludes that the results of the hydrostatic test of the as-built ASME Code piping identified in Table 2.11.2-1 conform with ASME Section III requirements.
5.a The seismic Category I components and instruments identified in Tables 2.11.2-2 and 2.11.2-3, including the supports and anchorages, withstand seismic design basis loads without loss of safety function.	5.a.i Inspections will be performed to verify that the as-built seismic Category I components and instruments are located in the seismic Category I structure.	5.a.i The as-built seismic Category I components and instruments identified in Tables 2.11.2-2 and 2.11.2-3 are located in a seismic Category I structure.
	5.a.ii Type tests, analyses, or a combination of type tests and analyses of seismic Category I components and instruments will be performed.	5.a.ii A report exists and concludes that the seismic Category I components and instruments identified in Tables 2.11.2-2 and 2.11.2-3 withstand seismic design basis loads without loss of safety function.
	5.a.iii Inspections will be performed to verify that the as-built seismic Category I components and instruments, including the supports and anchorages, are seismically bounded by the tested or analyzed conditions.	5.a.iii A report exists and concludes that the as-built seismic Category I components and instruments identified in Tables 2.11.2-2 and 2.11.2-3, including the supports and anchorages, are seismically bounded by the tested or analyzed conditions.

Table 2.11.2-4 (3 of 8)

Design Commitment	Inspections, Tests, Analyses	Acceptance Criteria
5.b The seismic Category I piping, including supports, identified in Table 2.11.2-1 withstand seismic design basis loads without loss of safety function.	5.b.i Inspections will be performed to verify that the as-built seismic Category I piping, including supports, is located in the seismic category I structure.	5.b.i The as-built seismic Category I piping, including supports, identified in Table 2.11.2-1 is located in the seismic Category I structure.
	5.b.ii Inspections and analyses of the as-built seismic Category I piping, including supports, will be performed.	5.b.ii A report exists and concludes that the as-built seismic Category I piping, including supports, identified in Table 2.11.2-1 withstand seismic design basis loads without loss of safety function.
6.a The Class 1E components and instruments identified in Tables 2.11.2-2 and 2.11.2-3 as being qualified for a harsh environment (and the associated wiring, cables, and terminations) withstand the environmental conditions that would exist before, during, and following a design basis accident without loss of safety function for the time required to perform the safety function.	6.a.i Type tests or a combination of type tests and analyses will be performed on Class 1E components and instruments located in a harsh environment.	6.a.i A report exists and concludes that the Class 1E components and instruments identified in Tables 2.11.2-2 and 2.11.2-3 as being qualified for a harsh environment withstand the environmental conditions that would exist before, during, and following a design basis accident without loss of safety function for the time required to perform the safety function.
	6.a.ii Inspections will be performed on the as-built Class 1E components and instruments (and the associated wiring, cables, and terminations) located in a harsh environment.	6.a.ii A report exists and concludes that the as-built Class 1E components and instruments identified in Tables 2.11.2-2 and 2.11.2-3 as being qualified for a harsh environment (and the associated wiring, cables, and terminations) are bounded by type tests or a combination of type tests and analyses.

Table 2.11.2-4 (4 of 8)

Design Commitment	Inspections, Tests, Analyses	Acceptance Criteria
6.b Each of the Class 1E components and instruments identified in Tables 2.11.2-2 and 2.11.2-3 is powered from its respective Class 1E division.	6.b Tests will be performed by providing a test signal in only one Class 1E division at a time.	6.b The test signal exists at the Class 1E components and instruments identified in Table 2.11.2-2 and 2.11.2-3 as being powered from the Class 1E division under test.
6.c Physical separation and electrical isolation are provided (1) between Class 1E divisions and (2) between Class 1E divisions and non-Class 1E divisions.	6.c Inspection of the as-built Class 1E divisions will be performed.	6.c Physical separation and electrical isolation exist in accordance with RG 1.75 (1) between Class 1E divisions and (2) between Class 1E divisions and non-Class 1E divisions.
7.a The CSS safety-related valves are functionally designed and qualified to perform their safety-related function under the full range of fluid flow, differential pressure, electrical, and temperature conditions with debris-laden coolant fluids up to and including design basis accident conditions.	7.a.i A type test or a combination of type test and analysis will be performed of the CSS safety-related valves.	7.a.i A Functional Qualification Report performed in conformance to ASME QME-1-2007, as accepted in Regulatory Guide 1.100 Revision 3, and a report addressing valve functional operability with debris-laden coolant fluids exist and conclude that the CSS safety-related valves listed in Table 2.11.2-2 are functionally designed and qualified to perform their safety-related function under the full range of fluid flow, differential pressure, electrical, and temperature conditions with debris laden coolant fluids up to and including design basis accident conditions.

Table 2.11.2-4 (5 of 8)

Design Commitment	Inspections, Tests, Analyses	Acceptance Criteria
7.a (cont.)	7.a.ii A diagnostic stroke test and analysis will be performed of the CSS safety-related valves under preoperational temperature, differential pressure, and flow conditions.	7.a.ii Each CSS safety-related valve listed in Table 2.11.2-2 strokes fully open and fully closed by remote operation (or manual operation if a manually operated valve) under preoperational temperature, differential pressure, and flow conditions. Analysis based on sufficient diagnostic data demonstrates that the valves will perform at their designbasis capability as established by the type test performed in accordance with 7.a.i.
	7.a.iii Tests of the as-built check valves will be performed under pre-operational test pressure, temperature, and fluid flow conditions.	7.a.iii Each check valve changes position as indicated in Table 2.11.2-2 under pre-operational test conditions.
7.b After loss of motive power, MOVs identified in Table 2.11.2-2 assume the indicated loss of motive power position.	7.b Tests of the as-built MOVs will be performed under the conditions of loss of motive power.	7.b Upon loss of motive power, each as-built MOV identified in Table 2.11.2-2 assumes the indicated loss of motive power position.
8.a Controls exist in the MCR to start and stop the CSS pumps, and to open and close the MOVs identified in Table 2.11.2-2.	8.a Tests will be performed using the controls in the MCR to start and stop the CSS pumps, and to open and close the MOVs.	8.a Controls in the as-built MCR start and stop the CSS pumps, and open and close the MOVs identified in Table 2.11.2-2.
8.b Controls exist in the RSR to start and stop the CSS pumps, and to open and close the MOVs identified listed in Table 2.11.2-2.	8.b Tests will be performed using the controls in the RSR to start and stop the CSS pumps, and to open and close the MOVs.	8.b Controls in the as-built RSR start and stop the CSS pumps, and open and close the MOVs identified in Table 2.11.2-2.

Table 2.11.2-4 (6 of 8)

Design Commitment	Inspections, Tests, Analyses	Acceptance Criteria
8.c Displays and alarms exist and are retrievable in the MCR as defined in Tables 2.11.2-2 and 2.11.2-3.	8.c Inspections of the as-built displays and alarms in the MCR will be performed.	8.c Displays and alarms exist and are be retrieved in the as-built MCR as defined in Tables 2.11.2-2 and 2.11.2-3.
8.d Displays and alarms exist and are retrievable in the RSR as defined in Tables 2.11.2-2 and 2.11.2-3.	8.d Inspections of the as-built displays and alarms in the RSR will be performed.	8.d Displays and alarms exist and are retrieved in the as-built RSR as defined in Tables 2.11.2-2 and 2.11.2-3.
9. Two mechanical divisions of the CSS (A & B) are physically separated.	9. Inspection of the as-built mechanical divisions of the CSS will be performed.	9. Two mechanical divisions of the CSS are physically separated by a divisional wall that is a 3-hour rated fire barrier.
10. The CSS safety-related pumps are functionally designed and qualified to perform their safety-related function under the full range of fluid flow, differential pressure, electrical, and temperature conditions with debris laden coolant fluids up to and including design basis accident conditions.	10. A type test or a combination of type test and analysis will be performed of the CSS safety-related pumps.	10. A Functional Qualification Report performed in conformance to ASME QME-1, as accepted in Regulatory Guide 1.100, and a report addressing pump functional operability with debris-laden coolant fluids exist and conclude that the CSS safety-related pumps listed in Table 2.11.2-2 are functionally designed and qualified to perform their safety-related function under the full range of fluid flow, differential pressure, electrical, and temperature conditions with debris-laden coolant fluids up to and including design basis accident conditions.

Table 2.11.2-4 (7 of 8)

Design Commitment	Inspections, Tests, Analyses	Acceptance Criteria
11. The CSS pumps have sufficient net positive suction head (NPSH).	11. A test to measure the as-built CSS pump suction pressure will be performed. Inspection and analyses to determine NPSH available to each pump will be performed based on test data and as-built data.	11. A report exists and concludes that the as-built calculated NPSH available exceeds each CSS pump's NPSH required.
12. The CSS has heat removal capacity to control the containment atmosphere temperature and pressure.	12.a Analyses will be performed to determine the heat removal capacities of each as-built CS heat exchanger.	12.a A report exists and concludes that the product of the overall heat transfer coefficient and the effective heat transfer area, UA, of each CS heat exchanger identified in Table 2.11.2-2 is greater than or equal to 7.793 × 105 cal/hr-°C (1.718 × 106 Btu/hr-°F).
	12.b A test of the as-built CS pump will be performed to measure the flow rate to the CS heat exchangers.	12.b The as-built CS pump identified in Table 2.11.2-2 delivers at least 18,927 L/min (5,000 gpm) to the CS heat exchangers.
13. The pumps identified in Table 2.11.2-2 can perform their safety functions under expected ranges of fluid flow, pump head, electrical, and temperature conditions up to and including design-basis conditions.	13.a Type tests or a combination of type tests and analyses of each pump identified in Table 2.11.2-2 will be performed to demonstrate the ability of the pump to perform its safety function under expected ranges of fluid flow, pump head, electrical, and temperature conditions up to and including design basis conditions.	13.a A report exists and concludes that the pumps identified in Table 2.11.2-2 can perform their safety functions under expected ranges of fluid flow, pump head, electrical, and temperature conditions up to and including design-basis conditions.
	13.b Inspections will be performed of each as-built pump identified in Table 2.11.2-2.	13.b Each as-built pump identified in Table 2.11.2-2 is bounded by the type tests, or a combination of type tests and analyses.

Table 2.11.2-4 (8 of 8)

Design Commitment	Inspections, Tests, Analyses	Acceptance Criteria
14. The containment heat removal function of the CSS will not be impaired by gas entrainment based on monitoring and venting at pre-determined intervals.	14.a An analysis of the potential for gas entrainment will be performed to identify specific gas intrusion mechanisms that affect each local and system high point of the as-built configuration of the CSS. The analysis will document the periodic monitoring and venting interval for the as-built system based on design limits.	14.a A report exists and identifies the specific gas intrusion mechanisms that affect each local and system high point of the as-built configuration of the CSS and documents the required periodic monitoring and venting interval for the as-built CSS system to ensure the containment heat removal function of the CSS will not be impaired by gas entrainment.
	14.b An inspection will be performed to verify high point vents are installed in the as-built CSS based on the analysis.	14.b High point vents are installed in the CSS based on the analysis.
15. The CSS non-metallic parts, materials, and lubricants used in safety-related mechanical equipment perform their safety-related function up to the end of their qualified life in the design basis harsh environmental conditions (both internal service conditions and external environmental conditions) experienced during normal operations, anticipated operational occurrences, design-basis accidents, and post accident conditions.	15. A type test or a combination of type test and analysis will be performed of the CSS non-metallic parts, materials, and lubricants used in safety-related mechanical equipment.	15. A report exists and concludes that the non-metallic parts, materials, and lubricants used in safety-related mechanical equipment listed in Table 2.11.2-2 perform their safety-related function up to the end of their qualified life under the design basis harsh environmental conditions (both internal service conditions and external environmental conditions) experienced during normal operations, anticipated operational occurrences, design-basis accidents, and post accident conditions.

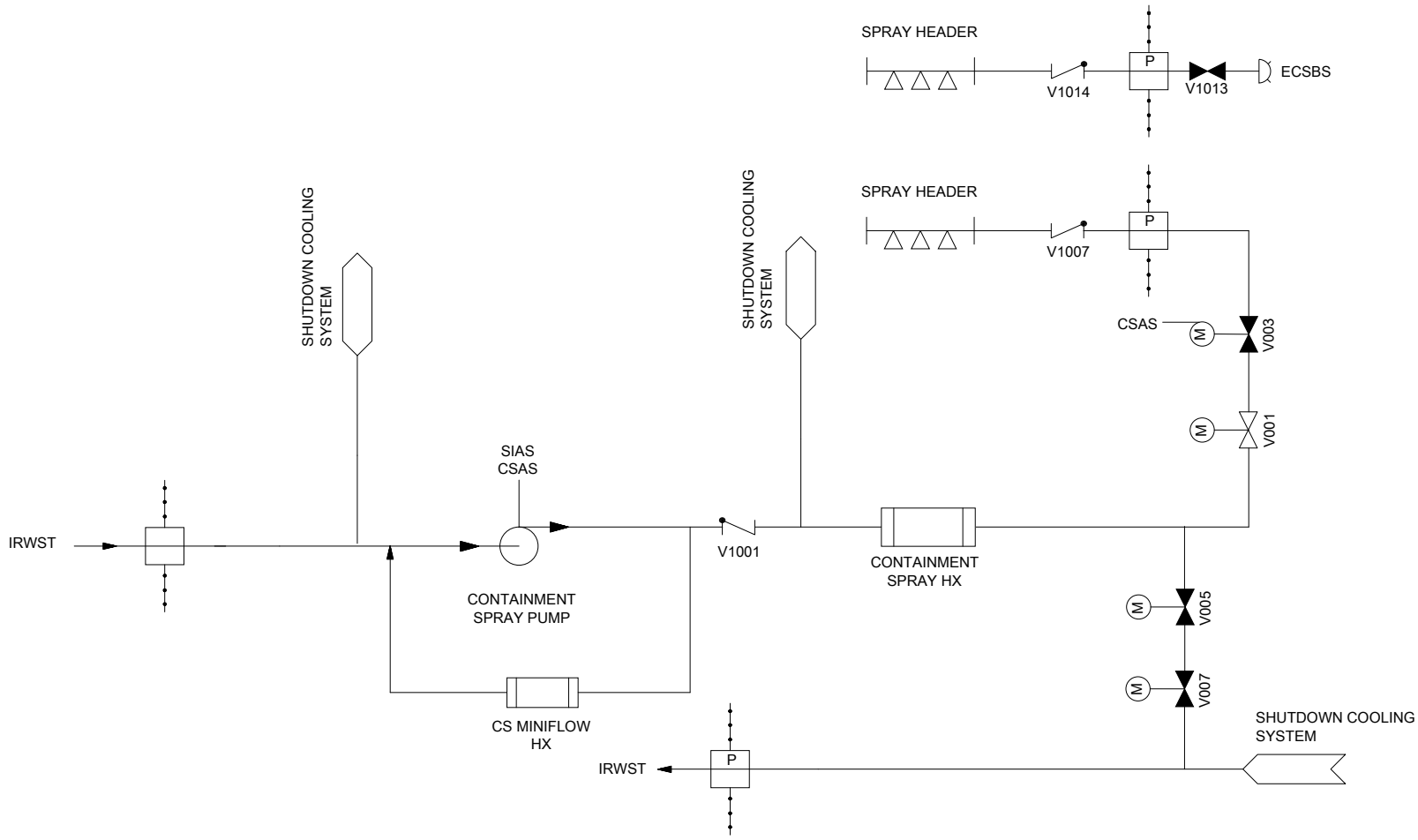

Note : Division I is shown for the representative configuration.

Figure 2.11.2-1 Containment Spray System

2.11.3 Containment Isolation System

2.11.3.1 Design Description

The containment isolation system (CIS) provides a safety-related means to close valves in fluid system piping that passes through containment penetrations. The CIS provides a pressure barrier at each of these containment penetrations.

The CIS has the following safety-related functions:

1. Provide automatic and leak-tight closure of those valves required to close for containment integrity following a design basis event to minimize release of any radioactive material.

2. Provide a double barrier at the containment penetration in those fluid systems that are not required to function following a design basis event.

To meet above functional requirements, the CIS is designed as follows:

1. The functional arrangement of the CIS is as described in the Design Description of Subsection 2.11.3.1 and in Table 2.11.3-1 and as shown in Figure 2.11.3-1.

2.a The ASME Code components identified in Table 2.11.3-1 are designed and constructed in accordance with ASME Section III requirements.

2.b The ASME Code piping, including supports, identified in Table 2.11.3-1 is designed and constructed in accordance with ASME Section III requirements.

3.a Pressure boundary welds in ASME Code components identified in Table 2.11.3-1 meet ASME Section III requirements.

3.b Pressure boundary welds in ASME Code piping identified in Table 2.11.3-1 meet ASME Section III requirements.

4.a The ASME Code components identified in Table 2.11.3-1 retain their pressure boundary integrity at their design pressure.

4.b The ASME Code piping identified in Table 2.11.3-1 retains its pressure boundary integrity at its design pressure.

5.a The seismic Category I components identified in Table 2.11.3-1, including the supports and anchorages, withstand seismic design basis loads without loss of safety function.

5.b The seismic Category I piping, including supports, identified in Table 2.11.3-1 withstand seismic design basis loads without loss of safety function.

6.a The Class 1E components identified in Table 2.11.3-1 as being qualified for a harsh environment (and the associated wiring, cables, and terminations) withstand the environmental conditions that would exist before, during, and following a design basis accident without loss of safety function for the time required to perform the safety function.

6.b Each of the Class 1E components identified in Table 2.11.3-1 is powered from its respective Class 1E division.

6.c Physical separation and electrical isolation are provided (1) between Class 1E divisions, and (2) between Class 1E divisions and non-Class 1E divisions.

7.a The CIS safety-related valves are designed and qualified to perform their safety-related function under the full range of fluid flow, differential pressure, electrical, and temperature conditions up to and including design basis accident conditions.

7.b After loss of motive power, MOVs, AOVs, SOVs, and E/H Valves identified in Table 2.11.3-1 assume the indicated loss of motive power position.

8.a Controls exist in the MCR to open and close the MOVs, AOVs, SOVs, and E/H Valves identified in Table 2.11.3-1.

8.b Controls exist in the RSR to open and close the MOVs, AOVs, SOVs, and E/H Valves identified in Table 2.11.3-1.

8.c Displays and alarms exist and are retrievable in the MCR as defined in Table 2.11.3-1.

8.d Displays and alarms exist and are retrievable in the RSR as defined in Table 2.11.3-1.

9. CIV closure times to limit potential releases of radioactivity as low as reasonably achievable are as shown in Table 2.11.3-1.

10. The CIS provides a safety-related function of containment isolation to prevent or limit the release of fission products to the environment.

11. MOVs, AOVs, SOVs, and E/H valves in series on the same containment penetration (whether located inside or outside containment) are powered from different Class 1E divisions.

12. Containment isolation valves outside the containment as listed in Table 2.11.3-1 and as shown in Figure 2.11.3-1, are located as close to the containment as practical, consistent with General Design Criteria 55, 56, and 57.

2.11.3.2 Inspections, Tests, Analyses, and Acceptance Criteria

The inspection, tests, analyses, and associated acceptance criteria for the CIAS are specified in Table 2.11.3-2.

Table 2.11.3-1 (1 of 19)

Containment Isolation System Components List

Item No.	Valve Type	Penetration No	Arrangement No.(2)	Closure Time (sec)	Location Relative to Containment	ASME Section III Class	Seismic Category	Class 1E/ Harsh Envir.	Control/ Display at MCR	Control/ Display at RCR	Control Signal (3)	Active Safety Function	Loss of Motive Power Position
Auxiliary Feedwater System													
AFW-V0043	MOV	PC0118	4	14	Outside	2	I	Yes/Yes	Yes/Yes	Yes/Yes	DPS-AFAS1 DMA-AFAS1 ESF-AFAS1	Close	As-is
AFW-V0044	MOV	PC0228	4	14	Outside	2	I	Yes/Yes	Yes/Yes	Yes/Yes	DPS-AFAS2 DMA-AFAS2 ESF-AFAS2	Close	As-is
AFW-V0045	MOV	PC0129	4	14	Outside	2	I	Yes/Yes	Yes/Yes	Yes/Yes	DPS-AFAS1 DMA-AFAS1 ESF-AFAS1	Close	As-is
AFW-V0046	MOV	PC0119	4	14	Outside	2	I	Yes/Yes	Yes/Yes	Yes/Yes	DPS-AFAS2 DMA-AFAS2 ESF-AFAS2	Close	As-is
AFW-V1007A	Check	PC0118	4	-	Inside	2	I	-/Yes	No/No	No/No	-	Close	-
AFW-V1007B	Check	PC0228	4	-	Inside	2	I	-/Yes	No/No	No/No	-	Close	-
AFW-V1008A	Check	PC0129	4	-	Inside	2	I	-/Yes	No/No	No/No	-	Close	-
AFW-V1008B	Check	PC0119	4	-	Inside	2	I	-/Yes	No/No	No/No	-	Close	-
Auxiliary Steam System													
AS-V1016	Manual	PC0143	26	-	Outside	2	I	No/No	No/No	No/No	-	Close	-
AS-V1017	Manual	PC0143	26	-	Inside	2	I	No/No	No/No	No/No	-	Close	-

Table 2.11.3-1 (2 of 19)

Item No.	Valve Type	Penetration No	Arrangement No.(2)	Closure Time (sec)	Location Relative to Containment	ASME Section III Class	Seismic Category	Class 1E/ Harsh Envir.	Control/ Display at MCR	Control/ Display at RCR	Control Signal (3)	Active Safety Function	Loss of Motive Power Position
Condenser Vacuum System													
CA-V0013	MOV	PC0242	5	30	Outside	2	I	Yes/Yes	Yes/Yes	Yes/Yes	CIAS	Close	As-is
CA-V1023	Check	PC0242	5	-	Inside	2	I	-/Yes	No/No	No/No	-	Close	-
Component Cooling Water System													
CC-V231	MOV	PC0137	6	50	Outside	2	I	Yes/Yes	Yes/Yes	Yes/Yes	CCWSTLLAS	Normal Open/Close	As-is
CC-V1099	Check	PC0137	6	-	Inside	2	I	-/Yes	No/No	No/No	-	Normal Open/Close	-
CC-V0249	MOV	PC0138	19	50	Inside	2	I	Yes/Yes	Yes/Yes	Yes/Yes	CCWSTLLAS	Normal Open/Close	As-is
CC-V0250	MOV	PC0138	19	50	Outside	2	I	Yes/Yes	Yes/Yes	Yes/Yes	CCWSTLLAS	Normal Open/Close	As-is
CC-V1100	Check	PC0138	19	-	Inside	2	I	-/ Yes	No/No	No/No	-	Close	-
CC-V0296	MOV	PC0162	23	40	Outside	2	I	Yes/Yes	Yes/Yes	Yes/Yes	CIAS	Close	As-is
CC-V297	MOV	PC0162	23	40	Inside	2	I	Yes/Yes	Yes/Yes	Yes/Yes	CIAS	Close	As-is
CC-V1685	Check	PC0162	23	-	Inside	2	I	-/ Yes	No/No	No/No	-	Close	-
CC-V301	MOV	PC0163	19	40	Inside	2	I	Yes/Yes	Yes/Yes	Yes/Yes	CIAS	Close	As-is
CC-V302	MOV	PC0163	19	40	Outside	2	I	Yes/Yes	Yes/Yes	Yes/Yes	CIAS	Close	As-is
CC-V1686	Check	PC0163	19	-	Inside	2	I	-/ Yes	No/No	No/No	-	Close	-

Table 2.11.3-1 (3 of 19)

Item No.	Valve Type	Penetration No	Arrangement No.(2)	Closure Time (sec)	Location Relative to Containment	ASME Section III Class	Seismic Category	Class 1E/ Harsh Envir.	Control/ Display at MCR	Control/ Display at RCR	Control Signal (3)	Active Safety Function	Loss of Motive Power Position
Containment Monitoring System													
CM-V001	SOV	PC0330	41	15	Inside	2	I	Yes/Yes	Yes/Yes	Yes/Yes	CIAS	Close	Close
CM-V002	SOV	PC0260	41	15	Inside	2	I	Yes/Yes	Yes/Yes	Yes/Yes	CIAS	Close	Close
CM-V003	SOV	PC0330	41	15	Outside	2	I	Yes/Yes	Yes/Yes	Yes/Yes	CIAS	Close	Close
CM-V004	SOV	PC0260	41	15	Outside	2	I	Yes/Yes	Yes/Yes	Yes/Yes	CIAS	Close	Close
CM-V009	SOV	PC0308	31	15	Outside	2	I	Yes/Yes	Yes/Yes	Yes/Yes	CIAS	Close	Close
CM-V010	SOV	PC0404	31	15	Outside	2	I	Yes/Yes	Yes/Yes	Yes/Yes	CIAS	Close	Close
CM-V011	SOV	PC0308	25	15	Inside	2	I	Yes/Yes	Yes/Yes	Yes/Yes	CIAS	Close	Close
CM-V012	SOV	PC0404	25	15	Inside	2	I	Yes/Yes	Yes/Yes	Yes/Yes	CIAS	Close	Close
CM-V013	SOV	PC0308	25	15	Outside	2	I	Yes/Yes	Yes/Yes	Yes/Yes	CIAS	Close	Close
CM-V014	SOV	PC0404	25	15	Outside	2	I	Yes/Yes	Yes/Yes	Yes/Yes	CIAS	Close	Close
CM-V023	SOV	PC0330	41	15	Inside	2	I	Yes/Yes	Yes/Yes	Yes/Yes	CIAS	Close	Close
CM-V024	SOV	PC0260	41	15	Inside	2	I	Yes/Yes	Yes/Yes	Yes/Yes	CIAS	Close	Close
CM-V1013	Check	PC0308	31	-	Inside	2	I	-/Yes	No/No	No/No	-	Close	-
CM-V1014	Check	PC0404	31	-	Inside	2	I	-/Yes	No/No	No/No	-	Close	-
CM-V17	SOV	PC0330	15	-	Outside	2	I	Yes/Yes	Yes/Yes	Yes/Yes	-	Close	Open
CM-V18	SOV	PC0260	15	-	Outside	2	I	Yes/Yes	Yes/Yes	Yes/Yes	-	Close	Open
CM-V19	SOV	PC0308	15	-	Outside	2	I	Yes/Yes	Yes/Yes	Yes/Yes	-	Close	Open
CM-V20	SOV	PC0404	15	-	Outside	2	I	Yes/Yes	Yes/Yes	Yes/Yes	-	Close	Open
CM-V21	SOV	PC0330	15	-	Outside	2	I	Yes/Yes	Yes/Yes	Yes/Yes	-	Close	Open
CM-V22	SOV	PC0260	15	-	Outside	2	I	Yes/Yes	Yes/Yes	Yes/Yes	-	Close	Open

Table 2.11.3-1 (4 of 19)

Item No.	Valve Type	Penetration No	Arrangement No.(2)	Closure Time (sec)	Location Relative to Containment	ASME Section III Class	Seismic Category	Class 1E/ Harsh Envir.	Control/ Display at MCR	Control/ Display at RCR	Control Signal (3)	Active Safety Function	Loss of Motive Power Position
Containment Spray System													
CS-V003	MOV	PC0116	5	15	Outside	2	I	Yes/Yes	Yes/Yes	Yes/Yes	CSAS	Normal Open/Close	As-is
CS-V004	MOV	PC0226	5	15	Outside	2	I	Yes/Yes	Yes/Yes	Yes/Yes	CSAS	Normal Open/Close	As-is
CS-V1007	Check	PC0116	5	-	Inside	2	I	-/Yes	No/No	No/No	-	Normal Open/Close	-
CS-V1008	Check	PC0226	5	-	Inside	2	I	-/Yes	No/No	No/No	-	Normal Open/Close	-
CS-V1013	Manual	PC0135	11	-	Outside	2	I	-/-	No/No	No/No	-	Normal Open/Close	-
CS-V1014	Check	PC0135	11	-	Inside	2	I	-/-	No/No	No/No	-	Normal Open/Close	-
Chemical and Volume Control System													
CV-V189	Check	PC0131	5	-	Inside	2	I	-/Yes	No/No	No/No	-	Close	-
CV-V255	MOV	PC0255	6	5	Outside	2	I	Yes/Yes	Yes/Yes	Yes/Yes	-	Close	As-is
CV-V362	Manual	PC0403	11	-	Outside	2	I	-/Yes	No/No	No/No	-	Close	-
CV-V363	Check	PC0403	11	-	Inside	2	I	-/Yes	No/No	No/No	-	Close	-
CV-V494	Check	PC0306	8	-	Inside	2	I	-/Yes	No/No	No/No	-	Close	-
CV-V505	AOV	PC0305	17	5	Outside	2	I	Yes/Yes	Yes/Yes	Yes/Yes	CSAS	Close	Close
CV-V506	AOV	PC0305	17	5	Inside	2	I	Yes/Yes	Yes/Yes	Yes/Yes	CSAS	Close	Close
CV-V509	MOV	PC0131	5	5	Outside	2	I	Yes/Yes	Yes/Yes	Yes/Yes	CIAS	Close	As-is
CV-V522	AOV	PC0402	17	5	Inside	2	I	Yes/Yes	Yes/Yes	Yes/Yes	CIAS	Close	Close
CV-V523	AOV	PC0402	17	5	Outside	2	I	Yes/Yes	Yes/Yes	Yes/Yes	CIAS	Close	Close

Table 2.11.3-1 (5 of 19)

Item No.	Valve Type	Penetration No	Arrangement No.(2)	Closure Time (sec)	Location Relative to Containment	ASME Section III Class	Seismic Category	Class 1E/ Harsh Envir.	Control/ Display at MCR	Control/ Display at RCR	Control Signal (3)	Active Safety Function	Loss of Motive Power Position
CV-V524	MOV	PC0230	6	5	Outside	2	I	Yes/Yes	Yes/Yes	Yes/Yes	-	Close	As-is
CV-V560	AOV	PC0232	20	5	Inside	2	I	Yes/Yes	Yes/Yes	Yes/Yes	CIAS	Close	Close
CV-V561	AOV	PC0232	20	5	Outside	2	I	Yes/Yes	Yes/Yes	Yes/Yes	CIAS	Close	Close
CV-V580	AOV	PC0306	8	5	Outside	2	I	Yes/Yes	Yes/Yes	Yes/Yes	CIAS	Close	Close
CV-V747	Check	PC0230	6	-	Inside	2	I	-/Yes	No/No	No/No	-	Close	-
CV-V835	Check	PC0255	6	-	Inside	2	I	-/Yes	No/No	No/No	-	Close	-
Radioactive Drain System													
DE-V0005	MOV	PC0141	33	20	Inside	2	I	Yes/ Yes	Yes/Yes	Yes/Yes	CIAS	Close	As-is
DE-V0006	AOV	PC0141	33	20	Outside	2	I	Yes/ Yes	Yes/Yes	Yes/Yes	CIAS	Close	Close
Spent Fuel Pool Cooling and Cleanup System													
FC-V1142	Manual	PC0239	26	-	Inside	2	I	-/-	No/No	No/No	-	Close	-
FC-V1143	Manual	PC0239	26	-	Outside	2	I	-/-	No/No	No/No	-	Close	-
FC-V1144	Manual	PC0240	11	-	Outside	2	I	-/-	No/No	No/No	-	Close	-
FC-V1145	Check	PC0240	11	-	Inside	2	I	-/-	No/No	No/No	-	Close	-
Fire Protection System													
FP-V0030	AOV	PC0253	8	30	Outside	2	I	Yes/ Yes	Yes/Yes	Yes/Yes	CIAS	Close	Close
FP-V1440	Check	PC0253	8	-	Inside	2	I	No/ Yes	No/No	No/No	-	Close	-

Table 2.11.3-1 (6 of 19)

Item No.	Valve Type	Penetration No	Arrangement No.(2)	Closure Time (sec)	Location Relative to Containment	ASME Section III Class	Seismic Category	Class 1E/ Harsh Envir.	Control/ Display at MCR	Control/ Display at RCR	Control Signal (3)	Active Safety Function	Loss of Motive Power Position
Feedwater System													
FW-V121	E/H	PC0511	40	5	Outside	2	I	Yes/Yes	Yes/Yes	Yes/Yes	MSIS	Close	Close
FW-V122	E/H	PC0511	40	5	Outside	2	I	Yes/Yes	Yes/Yes	Yes/Yes	MSIS	Close	Close
FW-V123	E/H	PC0521	40	5	Outside	2	I	Yes/Yes	Yes/Yes	Yes/Yes	MSIS	Close	Close
FW-V124	E/H	PC0521	40	5	Outside	2	I	Yes/Yes	Yes/Yes	Yes/Yes	MSIS	Close	Close
FW-V131	E/H	PC0512	12	5	Outside	2	I	Yes/Yes	Yes/Yes	Yes/Yes	MSIS	Close	Close
FW-V132	E/H	PC0512	12	5	Outside	2	I	Yes/Yes	Yes/Yes	Yes/Yes	MSIS	Close	Close
FW-V133	E/H	PC0522	12	5	Outside	2	I	Yes/Yes	Yes/Yes	Yes/Yes	MSIS	Close	Close
FW-V134	E/H	PC0522	12	5	Outside	2	I	Yes/Yes	Yes/Yes	Yes/Yes	MSIS	Close	Close
FW-V138	SOV	PC0512	12	15	Outside	2	I	Yes/Yes	Yes/Yes	Yes/Yes	MSIS	Close	Close
FW-V139	SOV	PC0522	12	15	Outside	2	I	Yes/Yes	Yes/Yes	Yes/Yes	MSIS	Close	Close
Gaseous Radwaste System													
GW-V0001	MOV	PC0307	36	15	Inside	2	I	Yes/Yes	Yes/Yes	Yes/Yes	CIAS	Close	As-is
GW-V0002	SOV	PC0307	36	15	Outside	2	I	Yes/Yes	Yes/Yes	Yes/Yes	CIAS	Close	Close
Instrument Air System													
IA-V0020	AOV	PC0145	34	15	Outside	2	I	Yes/Yes	Yes/Yes	Yes/Yes	CSAS	Close	Close
IA-V1601	Check	PC0145	34	-	Inside	2	I	No/Yes	No/No	No/No	-	Close	-

Table 2.11.3-1 (7 of 19)

Item No.	Valve Type	Penetration No	Arrangement No.(2)	Closure Time (sec)	Location Relative to Containment	ASME Section III Class	Seismic Category	Class 1E/ Harsh Envir.	Control/ Display at MCR	Control/ Display at RCR	Control Signal (3)	Active Safety Function	Loss of Motive Power Position
In-Containment Water Storage System													
IW-V005	MOV	-	37	20	Outside	2	I	Yes/Yes	Yes/Yes	Yes/Yes	CIAS	Close	As-is
IW-V006	MOV	-	37	20	Outside	2	I	Yes/Yes	Yes/Yes	Yes/Yes	CIAS	Close	As-is
IW-V010	SOV	PC0350	16	15	Outside	2	I	Yes/Yes	Yes/Yes	Yes/Yes	-	Normal Open/Close	Open
IW-V011	SOV	-	16	15	Outside	2	I	Yes/Yes	Yes/Yes	Yes/Yes	-	Normal Open/Close	Open
IW-V012	SOV	PC0344	16	15	Outside	2	I	Yes/Yes	Yes/Yes	Yes/Yes	-	Normal Open/Close	Open
IW-V013	SOV	-	16	15	Outside	2	I	Yes/Yes	Yes/Yes	Yes/Yes	-	Normal Open/Close	Open
IW-V014	SOV	PC0345	16	15	Outside	2	I	Yes/Yes	Yes/Yes	Yes/Yes	-	Normal Open/Close	Open
IW-V015	SOV	-	16	15	Outside	2	I	Yes/Yes	Yes/Yes	Yes/Yes	-	Normal Open/Close	Open
IW-V016	SOV	PC0346	16	15	Outside	2	I	Yes/Yes	Yes/Yes	Yes/Yes	-	Normal Open/Close	Open
IW-V017	SOV	-	16	15	Outside	2	I	Yes/Yes	Yes/Yes	Yes/Yes	-	Normal Open/Close	Open
IW-V018	SOV	PC0340	16	15	Outside	2	I	Yes/Yes	Yes/Yes	Yes/Yes	-	Normal Open/Close	Open
IW-V019	SOV	-	16	15	Outside	2	I	Yes/Yes	Yes/Yes	Yes/Yes	-	Normal Open/Close	Open
IW-V020	SOV	PC0341	16	15	Outside	2	I	Yes/Yes	Yes/Yes	Yes/Yes	-	Normal Open/Close	Open

Table 2.11.3-1 (8 of 19)

Item No.	Valve Type	Penetration No	Arrangement No.(2)	Closure Time (sec)	Location Relative to Containment	ASME Section III Class	Seismic Category	Class 1E/ Harsh Envir.	Control/ Display at MCR	Control/ Display at RCR	Control Signal (3)	Active Safety Function	Loss of Motive Power Position
IW-V021	SOV	-	16	15	Outside	2	I	Yes/Yes	Yes/Yes	Yes/Yes	-	Normal Open/Close	Open
IW-V022	SOV	PC0349	16	15	Outside	2	I	Yes/Yes	Yes/Yes	Yes/Yes	-	Open	Open
IW-V023	SOV	-	16	15	Outside	2	I	Yes/Yes	Yes/Yes	Yes/Yes	-	Open	Open
IW-V024	SOV	PC0351	16	15	Outside	2	I	Yes/Yes	Yes/Yes	Yes/Yes	-	Open	Open
IW-V025	SOV	-	16	15	Outside	2	I	Yes/Yes	Yes/Yes	Yes/Yes	-	Open	Open
IW-V026	SOV	PC0352	16	15	Outside	2	I	Yes/Yes	Yes/Yes	Yes/Yes	-	Open	Open
IW-V027	SOV	-	16	15	Outside	2	I	Yes/Yes	Yes/Yes	Yes/Yes	-	Open	Open
IW-V028	SOV	PC0347	16	15	Outside	2	I	Yes/Yes	Yes/Yes	Yes/Yes	-	Open	Open
IW-V029	SOV	-	16	15	Outside	2	I	Yes/Yes	Yes/Yes	Yes/Yes	-	Open	Open
IW-V030	SOV	PC0348	16	15	Outside	2	I	Yes/Yes	Yes/Yes	Yes/Yes	-	Open	Open
IW-V031	SOV	-	16	15	Outside	2	I	Yes/Yes	Yes/Yes	Yes/Yes	-	Open	Open
IW-V032	SOV	PC0342	16	15	Outside	2	I	Yes/Yes	Yes/Yes	Yes/Yes	-	Open	Open
IW-V033	SOV	-	16	15	Outside	2	I	Yes/Yes	Yes/Yes	Yes/Yes	-	Open	Open
IW-V034	SOV	PC0343	16	15	Outside	2	I	Yes/Yes	Yes/Yes	Yes/Yes	-	Open	Open
IW-V035	SOV	-	16	15	Outside	2	I	Yes/Yes	Yes/Yes	Yes/Yes	-	Open	Open

Table 2.11.3-1 (9 of 19)

Item No.	Valve Type	Penetration No	Arrangement No.(2)	Closure Time (sec)	Location Relative to Containment	ASME Section III Class	Seismic Category	Class 1E/ Harsh Envir.	Control/ Display at MCR	Control/ Display at RCR	Control Signal (3)	Active Safety Function	Loss of Motive Power Position
Main Steam System													
MS-V0109	AOV	PC0622	3	5	Outside	2	I	Yes/Yes	Yes/Yes	Yes/Yes	ESF-AFAS-2 DPS-AFAS-2	Normal Close/Open	Open
MS-V0110	AOV	PC0612	3	5	Outside	2	I	Yes/Yes	Yes/Yes	Yes/Yes	ESF-AFAS-1 DPS-AFAS-1	Normal Close/Open	Open
MS-V0111	AOV	PC0622	3	15	Outside	2	I	Yes/Yes	Yes/Yes	Yes/Yes	-	Normal Open	Open
MS-V0112	AOV	PC0612	3	15	Outside	2	I	Yes/Yes	Yes/Yes	Yes/Yes	-	Normal Open	Open
MS-V1030	Manual	PC0612	3	-	Outside	2	I	Yes/Yes	No/No	No/No	-	-	-
MS-V1257	Manual	PC0611	1	-	Outside	2	I	Yes/Yes	No/No	No/No	-	-	-
MS-V1073	Manual	PC0621	1	-	Outside	2	I	Yes/Yes	No/No	No/No	-	-	-
MS-V1051	Manual	PC0622	3	-	Outside	2	I	Yes/Yes	No/No	No/No	-	-	-
MS-V011	E/H	PC0612	3	5	Outside	2	I	Yes/Yes	Yes/Yes	Yes/Yes	MSIS DMA-MSIS	Close	Close
MS-V012	E/H	PC0611	1	5	Outside	2	I	Yes/Yes	Yes/Yes	Yes/Yes	MSIS DMA-MSIS	Close	Close
MS-V013	E/H	PC0621	1	5	Outside	2	I	Yes/Yes	Yes/Yes	Yes/Yes	MSIS DMA-MSIS	Close	Close
MS-V014	E/H	PC0622	3	5	Outside	2	I	Yes/Yes	Yes/Yes	Yes/Yes	MSIS DMA-MSIS	Close	Close
MS-V015	E/H	PC0612	3	10	Outside	2	I	Yes/Yes	Yes/Yes	Yes/Yes	MSIS	Close	Close
MS-V016	E/H	PC0611	1	10	Outside	2	I	Yes/Yes	Yes/Yes	Yes/Yes	MSIS	Close	Close
MS-V017	E/H	PC0621	1	10	Outside	2	I	Yes/Yes	Yes/Yes	Yes/Yes	MSIS	Close	Close

Table 2.11.3-1 (10 of 19)

Item No.)	Valve Type	Penetration No	Arrangement No.(2)	Closure Time (sec)	Location Relative to Containment	ASME Section III Class	Seismic Category	Class 1E/ Harsh Envir.	Control/ Display at MCR	Control/ Display at RCR	Control Signal (3)	Active Safety Function	Loss of Motive Power Position
MS-V018	E/H	PC0622	3	10	Outside	2	I	Yes/Yes	Yes/Yes	Yes/Yes	MSIS	Close	Close
MS-V090	AOV	PC0612	3	15	Outside	2	I	Yes/Yes	Yes/Yes	Yes/Yes	MSIS	Close	Close
MS-V091	AOV	PC0611	1	15	Outside	2	I	Yes/Yes	Yes/Yes	Yes/Yes	MSIS	Close	Close
MS-V092	AOV	PC0621	1	15	Outside	2	I	Yes/Yes	Yes/Yes	Yes/Yes	MSIS	Close	Close
MS-V093	AOV	PC0622	3	15	Outside	2	I	Yes/Yes	Yes/Yes	Yes/Yes	MSIS	Close	Close
MS-V101	E/H	PC0612	3	-	Outside	2	I	Yes/Yes	Yes/Yes	Yes/Yes	-	Close	Close
MS-V102	E/H	PC0611	1	-	Outside	2	I	Yes/Yes	Yes/Yes	Yes/Yes	-	Close	Close
MS-V103	E/H	PC0621	1	-	Outside	2	I	Yes/Yes	Yes/Yes	Yes/Yes	-	Close	Close
MS-V104	E/H	PC0622	3	-	Outside	2	I	Yes/Yes	Yes/Yes	Yes/Yes	-	Close	Close
MS-V1301	Safety V/V	PC0612	3	-	Outside	2	I	-/Yes	No/No	No/No	-	Close	-
MS-V1302	Safety V/V	PC0611	1	-	Outside	2	I	-/Yes	No/No	No/No	-	Close	-
MS-V1303	Safety V/V	PC0612	3	-	Outside	2	I	-/Yes	No/No	No/No	-	Close	-
MS-V1304	Safety V/V	PC0611	1	-	Outside	2	I	-/Yes	No/No	No/No	-	Close	-
MS-V1305	Safety V/V	PC0612	3	-	Outside	2	I	-/Yes	No/No	No/No	-	Close	-
MS-V1306	Safety V/V	PC0611	1	-	Outside	2	I	-/Yes	No/No	No/No	-	Close	-
MS-V1307	Safety V/V	PC0612	3	-	Outside	2	I	-/Yes	No/No	No/No	-	Close	-
MS-V1308	Safety V/V	PC0611	1	-	Outside	2	I	-/Yes	No/No	No/No	-	Close	Close
MS-V1309	Safety V/V	PC0612	3	-	Outside	2	I	-/Yes	No/No	No/No	-	Close	Close
MS-V1310	Safety V/V	PC0611	1	-	Outside	2	I	-/Yes	No/No	No/No	-	Close	-

Table 2.11.3-1 (11 of 19)

Item No.	Valve Type	Penetration No	Arrangement No.(2)	Closure Time (sec)	Location Relative to Containment	ASME Section III Class	Seismic Category	Class 1E/ Harsh Envir.	Control/ Display at MCR	Control/ Display at RCR	Control Signal (3)	Active Safety Function	Loss of Motive Power Position
MS-V1311	Safety V/V	PC0621	1	-	Outside	2	I	-/Yes	No/No	No/No	-	Close	-
MS-V1312	Safety V/V	PC0622	3	-	Outside	2	I	-/Yes	No/No	No/No	-	Close	-
MS-V1313	Safety V/V	PC0621	1	-	Outside	2	I	-/Yes	No/No	No/No	-	Close	-
MS-V1314	Safety V/V	PC0622	3	-	Outside	2	I	-/Yes	No/No	No/No	-	Close	-
MS-V1315	Safety V/V	PC0621	1	-	Outside	2	I	-/Yes	No/No	No/No	-	Close	-
MS-V1316	Safety V/V	PC0622	3	-	Outside	2	I	-/Yes	No/No	No/No	-	Close	-
MS-V1317	Safety V/V	PC0621	1	-	Outside	2	I	-/Yes	No/No	No/No	-	Close	-
MS-V1318	Safety V/V	PC0622	3	-	Outside	2	I	-/Yes	No/No	No/No	-	Close	-
MS-V1319	Safety V/V	PC0621	1	-	Outside	2	I	-/Yes	No/No	No/No	-	Close	-
MS-V1320	Safety V/V	PC0622	3	-	Outside	2	I	-/Yes	No/No	No/No	-	Close	-
Nitrogen System													
NT-V0004	SOV	PC0318	34	15	Outside	2	I	Yes/Yes	Yes/Yes	Yes/Yes	CIAS	Close	Close
NT-V1016	Check	PC0318	34	-	Inside	2	I	-/Yes	No/No	No/No	-	Close	-
Process Sampling System													
PR-V1433	Check	PC0319	7	-	Inside	2	I	-/Yes	No/No	No/No	-	-	-
PR-V431	MOV	PC0319	29	15	Inside	2	I	Yes/Yes	Yes/Yes	Yes/Yes	CIAS	Close	As-is
PR-V432	MOV	PC0319	29	15	Outside	2	I	Yes/Yes	Yes/Yes	Yes/Yes	CIAS	Close	As-is
PR-V434	MOV	PC0319	7	15	Outside	2	I	Yes/Yes	Yes/Yes	Yes/Yes	CIAS	Close	As-is

Table 2.11.3-1 (12 of 19)

Item No.	Valve Type	Penetration No	Arrangement No.(2)	Closure Time (sec)	Location Relative to Containment	ASME Section III Class	Seismic Category	Class 1E/ Harsh Envir.	Control/ Display at MCR	Control/ Display at RCR	Control Signal (3)	Active Safety Function	Loss of Motive Power Position
Radiation Monitoring System													
PS-V0031	SOV	PC0331	42	15	Outside	2	I	Yes/Yes	Yes/Yes	Yes/Yes	CIAS, AFAS, MSIS	Close	Close
PS-V0032	SOV	PC0438	42	15	Outside	2	I	Yes/Yes	Yes/Yes	Yes/Yes	CIAS, AFAS, MSIS	Close	Close
PS-V0033	SOV	PC0333	32	15	Outside	2	I	Yes/Yes	Yes/Yes	Yes/Yes	CIAS, AFAS, MSIS	Close	Close
PS-V0034	SOV	PC0436	32	15	Outside	2	I	Yes/Yes	Yes/Yes	Yes/Yes	CIAS, AFAS, MSIS	Close	Close
PS-V0035	SOV	PC0332	38	15	Outside	2	I	Yes/Yes	Yes/Yes	Yes/Yes	CIAS, AFAS, MSIS	Close	Close
PS-V0036	SOV	PC0437	38	15	Outside	2	I	Yes/Yes	Yes/Yes	Yes/Yes	CIAS, AFAS, MSIS	Close	Close
PS-V0257	SOV	PC0331	42	15	Outside	2	I	Yes/Yes	Yes/Yes	Yes/Yes	CIAS, AFAS, MSIS	Close	Close
PS-V0258	SOV	PC0438	42	15	Outside	2	I	Yes/Yes	Yes/Yes	Yes/Yes	CIAS, AFAS, MSIS	Close	Close

Table 2.11.3-1 (13 of 19)

Item No.	Valve Type	Penetration No	Arrangement No.(2)	Closure Time (sec)	Location Relative to Containment	ASME Section III Class	Seismic Category	Class 1E/ Harsh Envir.	Control/ Display at MCR	Control/ Display at RCR	Control Signal (3)	Active Safety Function	Loss of Motive Power Position
Primary Sampling System													
PX-V0001	SOV	PC0310	24	15	Inside	2	I	Yes/Yes	Yes/Yes	Yes/Yes	CIAS	Close	Close
PX-V0002	SOV	PC0310	24	15	Outside	2	I	Yes/Yes	Yes/Yes	Yes/Yes	CIAS	Close	Close
PX-V0003	SOV	PC0408	24	15	Inside	2	I	Yes/Yes	Yes/Yes	Yes/Yes	CIAS	Close	Close
PX-V0004	SOV	PC0408	24	15	Outside	2	I	Yes/Yes	Yes/Yes	Yes/Yes	CIAS	Close	Close
PX-V0005	SOV	PC0409	24	15	Inside	2	I	Yes/Yes	Yes/Yes	Yes/Yes	CIAS	Close	Close
PX-V0006	SOV	PC0409	24	15	Outside	2	I	Yes/Yes	Yes/Yes	Yes/Yes	CIAS	Close	Close
PX-V0020	SOV	PC0311	24	15	Outside	2	I	Yes/Yes	Yes/Yes	Yes/Yes	CIAS	Close	Close
PX-V0021	SOV	PC0311	24	15	Inside	2	I	Yes/Yes	Yes/Yes	Yes/Yes	CIAS	Close	Close
PX-V0041	MOV	PC0312	27	15	Inside	2	I	Yes/Yes	Yes/Yes	Yes/Yes	CIAS	Close	As-is
PX-V0042	MOV	PC0312	27	15	Outside	2	I	Yes/Yes	Yes/Yes	Yes/Yes	CIAS	Close	As-is
PX-V0043	MOV	PC0312	5	15	Outside	2	I	Yes/Yes	Yes/Yes	Yes/Yes	CIAS	Close	As-is
PX-V1020	Check	PC0312	5	-	Inside	2	I	Yes/Yes	No/No	No/No	-	Close	-
PX-V0053	SOV	PC0313	30	15	Outside	2	I	Yes/No	Yes/Yes	Yes/Yes	CIAS	Close	Close
PX-V1005	Check	PC0313	30	-	Inside	2	I	-/Yes	No/No	No/No	-	Close	-
Service Air System													
SA-V001	AOV	PC0144	8	15	Outside	2	I	Yes/Yes	Yes/Yes	Yes/Yes	CIAS	Close	Close
SA-V1401	Check	PC0144	8	-	Inside	2	I	No/Yes	No/No	No/No	-	Close	Close

Table 2.11.3-1 (14 of 19)

Item No.	Valve Type	Penetration No	Arrangement No.(2)	Closure Time (sec)	Location Relative to Containment	ASME Section III Class	Seismic Category	Class 1E/ Harsh Envir.	Control/ Display at MCR	Control/ Display at RCR	Control Signal (3)	Active Safety Function	Loss of Motive Power Position
Steam Generator Blowdown System													
SD-V0005	AOV	PC0911	35	40	Outside	2	I	Yes/No	Yes/Yes	Yes/Yes	MSIS/CIAS/ DPS-AFAS /AFAS	Close	Close
SD-V0006	AOV	PC0912	35	40	Outside	2	I	Yes/No	Yes/Yes	Yes/Yes	MSIS/CIAS/ DPS-AFAS /AFAS	Close	Close
SD-V0007	MOV	PC0911	35	40	Outside	2	I	Yes/No	Yes/Yes	Yes/Yes	MSIS/CIAS/ DPS-AFAS /AFAS	Close	Close
SD-V0008	MOV	PC0912	35	40	Outside	2	I	Yes/No	Yes/Yes	Yes/Yes	MSIS/CIAS/ DPS-AFAS /AFAS	Close	Close
SD-V1113	Manual	PC0134	11	-	Outside	2	I	No/No	No/No	No/No	-	Close	-
SD-V1114	Manual	PC0233	11	-	Inside	2	I	No/No	No/No	No/No	-	Close	-
SD-V1115	Check	PC0134	11	-	Outside	2	I	No/Yes	No/No	No/No	-	Close	-
SD-V1116	Check	PC0233	11	-	Inside	2	I	No/Yes	No/No	No/No		Close	-

Table 2.11.3-1 (15 of 19)

Item No.	Valve Type	Penetration No	Arrangement No.(2)	Closure Time (sec)	Location Relative to Containment	ASME Section III Class	Seismic Category	Class 1E/ Harsh Envir.	Control/ Display at MCR	Control/ Display at RCR	Control Signal (3)	Active Safety Function	Loss of Motive Power Position
Safety Injection System/Shutdown Cooling System													
SI-V100	Check	PC0111	14	-	Inside	2	I	No/Yes	No/No	No/No	-	Normal Close/Open	-
SI-V101	Check	PC0221	14	-	Inside	2	I	No/Yes	No/No	No/No	-	Normal Close/Open	-
SI-V113	Check	PC0212	22	-	Inside	2	I	No/Yes	No/No	No/No	-	Normal Close/Open	-
SI-V123	Check	PC0214	10	-	Inside	2	I	No/Yes	No/No	No/No	-	Normal Close/Open	-
SI-V133	Check	PC0122	22	-	Inside	2	I	No/Yes	No/No	No/No	-	Normal Close/Open	-
SI-V143	Check	PC0124	10	-	Inside	2	I	No/Yes	No/No	No/No	-	Normal Close/Open	-
SI-V179	Relief	PC0125	9	-	Inside	2	I	No/Yes	No/No	No/No	RV Setpoint	Close	-
SI-V189	Relief	PC0215	9	-	Inside	2	I	No/Yes	No/No	No/No	RV Setpoint	Close	-
SI-V293	Manual	PC0301	13	-	Outside	2	I	No/No	No/No	No/No	-	Close	-
SI-V300	MOV	PC0111	14	50	Outside	2	I	Yes/No	Yes/Yes	Yes/Yes	-	Close	As-is
SI-V301	MOV	PC0221	14	50	Outside	2	I	Yes/No	Yes/Yes	Yes/Yes	-	Close	As-is
SI-V302	MOV	PC0111	14	20	Outside	2	I	Yes/No	Yes/Yes	Yes/Yes	-	Normal Open/ Close	As-is
SI-V303	MOV	PC0221	14	20	Outside	2	I	Yes/No	Yes/Yes	Yes/Yes	-	Normal Open/ Close	As-is

Table 2.11.3-1 (16 of 19)

Item No.	Valve Type	Penetration No	Arrangement No.(2)	Closure Time (sec)	Location Relative to Containment	ASME Section III Class	Seismic Category	Class 1E/ Harsh Envir.	Control/ Display at MCR	Control/ Display at RCR	Control Signal (3)	Active Safety Function	Loss of Motive Power Position
SI-V304	MOV	-	18	60	Outside	2	I	Yes/No	Yes/Yes	Yes/Yes	-	Normal Open/Close	As-is
SI-V305	MOV	-	18	60	Outside	2	I	Yes/No	Yes/Yes	Yes/Yes	-	Normal Open/Close	As-is
SI-V308	MOV	-	18	60	Outside	2	I	Yes/No	Yes/Yes	Yes/Yes	-	Normal Open/Close	As-is
SI-V309	MOV	-	18	60	Outside	2	I	Yes/No	Yes/Yes	Yes/Yes	-	Normal Open/Close	As-is
SI-V321	MOV	PC0123	22	10	Outside	2	I	Yes/No	Yes/Yes	Yes/Yes	-	Normal Close/Open	As-is
SI-V331	MOV	PC0213	22	10	Outside	2	I	Yes/No	Yes/Yes	Yes/Yes	-	Normal Close/Open	As-is
SI-V474	Relief	PC0301	13	-	Inside	2	I	No/Yes	No/No	No/No	RV Setpoint	Close	-
SI-V523	Check	PC0123	22	-	Inside	2	I	No/Yes	No/No	No/No	-	Normal Close/Open	-
SI-V533	Check	PC0213	22	-	Inside	2	I	No/Yes	No/No	No/No	-	Normal Close/Open	-
SI-V600	MOV	PC0214	10	10	Outside	2	I	Yes/No	Yes/Yes	Yes/Yes	-	Normal Close/ Open	As-is
SI-V601	MOV	PC0124	10	10	Outside	2	I	Yes/No	Yes/Yes	Yes/Yes	-	Normal Close/ Open	As-is
SI-V602	MOV	PC0214	10	10	Outside	2	I	Yes/No	Yes/Yes	Yes/Yes	-	Normal Close/Open	As-is
SI-V603	MOV	PC0124	10	10	Outside	2	I	Yes/No	Yes/Yes	Yes/Yes	-	Normal Close/Open	As-is

Table 2.11.3-1 (17 of 19)

Item No.)	Valve Type	Penetration No	Arrangement No.(2)	Closure Time (sec)	Location Relative to Containment	ASME Section III Class	Seismic Category	Class 1E/ Harsh Envir.	Control/ Display at MCR	Control/ Display at RCR	Control Signal (3)	Active Safety Function	Loss of Motive Power Position
SI-V616	MOV	PC0212	22	10	Outside	2	I	Yes/No	Yes/Yes	Yes/Yes	SIAS, DPS-SIAS	Normal Close/Open	As-is
SI-V626	MOV	PC0214	10	10	Outside	2	I	Yes/No	Yes/Yes	Yes/Yes	SIAS, DPS-SIAS	Normal Close/Open	As-is
SI-V636	MOV	PC0122	22	10	Outside	2	I	Yes/No	Yes/Yes	Yes/Yes	SIAS, DPS-SIAS	Normal Close/Open	As-is
SI-V646	MOV	PC0124	10	10	Outside	2	I	Yes/No	Yes/Yes	Yes/Yes	SIAS, DPS-SIAS	Normal Close/Open	As-is
SI-V653	MOV	PC0125	9	160	Inside	2	I	Yes/Yes	Yes/Yes	Yes/Yes	-	Normal Close/Open	As-is
SI-V654	MOV	PC0215	9	160	Inside	2	I	Yes/Yes	Yes/Yes	Yes/Yes	-	Normal Close/Open	As-is
SI-V655	MOV	PC0125	9	80	Outside	2	I	Yes/No	Yes/Yes	Yes/Yes	-	Normal Close/Open	As-is
SI-V656	MOV	PC0215	9	80	Outside	2	I	Yes/No	Yes/Yes	Yes/Yes	-	Normal Close/Open	As-is
SI-V682	AOV	PC0301	13	5	Inside	2	I	Yes/Yes	Yes/Yes	Yes/Yes	SIAS, DPS-SIAS	Close	Close

Table 2.11.3-1 (18 of 19)

Item No.	Valve Type	Penetration No	Arrangement No.(2)	Closure Time (sec)	Location Relative to Containment	ASME Section III Class	Seismic Category	Class 1E/ Harsh Envir.	Control/ Display at MCR	Control/ Display at RCR	Control Signal (3)	Active Safety Function	Loss of Motive Power Position
Reactor Containment Building Purge System													
VQ-V0011	E/H	PC0250	28	5	Outside	2	I	Yes/No	Yes/Yes	Yes/Yes	CIAS ESF-CPIAS	Close	Close
VQ-V0012	MOV	PC0250	28	5	Inside	2	I	Yes/Yes	Yes/Yes	Yes/Yes	CIAS ESF-CPIAS	Close	As-is
VQ-V0013	MOV	PC0249	28	5	Inside	2	I	Yes/Yes	Yes/Yes	Yes/Yes	CIAS ESF-CPIAS	Close	As-is
VQ-V0014	E/H	PC0249	28	5	Outside	2	I	Yes/No	Yes/Yes	Yes/Yes	CIAS ESF-CPIAS	Close	Close
VQ-V0031	AOV	PC0247	2	5	Outside	2	I	Yes/No	Yes/Yes	Yes/Yes	CIAS ESF-CPIAS	Close	Close
VQ-V0032	AOV	PC0247	2	5	Inside	2	I	Yes/Yes	Yes/Yes	Yes/Yes	CIAS ESF-CPIAS	Close	Close
VQ-V0033	AOV	PC0246	21	5	Inside	2	I	Yes/Yes	Yes/Yes	Yes/Yes	CIAS ESF-CPIAS	Close	Close
VQ-V0034	AOV	PC0246	21	5	Outside	2	I	Yes/No	Yes/Yes	Yes/Yes	CIAS ESF-CPIAS	Close	Close
VQ-V2014	Manual	PC0417	43	-	Outside	2	I	No/No	No/No	No/No	-	Close	-
VQ-V2016	Manual	PC0316	43	-	Outside	2	I	No/No	No/No	No/No	-	Close	-
VQ-V2024	Manual	PC0166	43	-	Outside	2	I	No/No	No/No	No/No	-	Close	-

Table 2.11.3-1 (19 of 19)

Item No.[1]	Valve Type	Penetration No	Arrangement No.[2]	Closure Time (sec)	Location Relative to Containment	ASME Section III Class	Seismic Category	Class 1E/ Harsh Envir.	Control/ Display at MCR	Control/ Display at RCR	Control Signal [3]	Active Safety Function	Loss of Motive Power Position
Plant Chilled Water System													
WI-V0012	AOV	PC0151	39	50	Outside	2	I	Yes/Yes	Yes/Yes	Yes/Yes	CIAS	Close	Close
WI-V0013	AOV	PC0152	34	50	Outside	2	I	Yes/Yes	Yes/Yes	Yes/Yes	CIAS	Close	Close
WI-V0014	Relief	PC0151	39	-	Inside	2	I	-/Yes	No/No	No/No	-	-	-
WI-V0015	MOV	PC0151	39	50	Inside	2	I	Yes/Yes	Yes/Yes	Yes/Yes	CIAS	Close	As-is
WI-V1043	Check	PC0152	34	-	Inside	2	I	-/Yes	No/No	No/No	-	Close	-

(1) Dash(-) indicates not applicable.

(2) Valve arrangements are shown in Figure 2.11.3-1.

(3) Definition of actuation signals.
AFAS - Auxiliary Feedwater Actuation Signal
CIAS - Containment Isolation Actuation Signal
CPIAS - Containment Purge Isolation Actuation Signal
CSAS - Containment Spray Actuation Signal
SIAS - Safety Injection Actuation Signal
MSIS - Main Steam Isolation Signal
All above signals are engineered safety feature (ESF) signal and classified as ESF valves.

Table 2.11.3-2 (1 of 7)

Containment Isolation System ITAAC

Design Commitment	Inspections, Tests, Analyses	Acceptance Criteria
1. The functional arrangement of the CIS is as described in the Design Description of Subsection 2.11.3.1 and in Table 2.11.3-1 and as shown in Figure 2.11.3-1.	1. Inspection of the as-built system will be conducted.	1. The as-built CIS conforms with the functional arrangement as described in the Design Description of Subsection 2.11.3.1 and in Table 2.11.3-1 and as shown in Figure 2.11.3-1.
2.a The ASME Code components identified in Table 2.11.3-1 are designed and constructed in accordance with ASME Section III requirements.	2.a Inspection of the as-built ASME Code components identified in Table 2.11.3-1 will be performed and documented in the ASME data report(s).	2.a The ASME Section III data report(s) exist and conclude that the as-built ASME Code components identified in Table 2.11.3-1 are designed and constructed in accordance with ASME Section III requirements.
2.b The ASME Code piping, including supports, identified in Table 2.11.3-1 is designed and constructed in accordance with ASME Section III requirements.	2.b Inspection of the as-built ASME Code piping, including supports, identified in Table 2.11.3-1 will be performed and documented in the ASME data report(s).	2.b The ASME Section III data report(s) exist and conclude that the as-built ASME Code piping, including supports, identified in Table 2.11.3-1 is designed and constructed in accordance with ASME Section III requirements.
3.a Pressure boundary welds in ASME Code components identified in Table 2.11.3-1 meet ASME Section III requirements.	3.a Inspections of the as- built pressure boundary welds in ASME Code components identified in Table 2.11.3-1 will be performed in accordance with the ASME Section III.	3.a A report exists and concludes that the ASME Section III requirements are met for non-destructive examination of the as-built pressure boundary welds in ASME Code components identified in Table 2.11.3-1.
3.b Pressure boundary welds in ASME Code piping identified in Table 2.11.3-1 meet ASME Section III requirements.	3.b Inspections of the as- built pressure boundary welds in ASME Code piping identified in Table 2.11.3-1 will be performed in accordance with the ASME Section III.	3.b A report exists and concludes that the ASME Section III requirements are met for non-destructive examination of the as-built pressure boundary welds in ASME Code piping identified in Table 2.11.3-1.

Table 2.11.3-2 (2 of 7)

Design Commitment	Inspections, Tests, Analyses	Acceptance Criteria
4.a The ASME Code components identified in Table 2.11.3-1 retain their pressure boundary integrity at their design pressure.	4.a A hydrostatic test will be conducted on the as-built ASME Code components identified in Table 2.11.3-1 required to be hydrostatically tested by the ASME Section III.	4.a A report exists and concludes that the results of the hydrostatic test of the as-built ASME Code components identified in Table 2.11.3-1 conform with ASME Section III requirements.
4.b The ASME Code piping identified in Table 2.11.3-1 retains its pressure boundary integrity at its design pressure.	4.b A hydrostatic test will be conducted on the as-built ASME Code piping identified in Table 2.11.3-1 required to be hydrostatically tested by the ASME Section III.	4.b A report exists and concludes that the he results of the hydrostatic test of the as-built ASME Code piping identified in Table 2.11.3-1 conform with ASME Section III requirements.
5.a The seismic Category I components identified in Table 2.11.3-1, including the supports and anchorages, withstand seismic design basis loads without loss of safety function.	5.a.i Inspections will be performed to verify that the as-built seismic Category I components are located in the seismic Category I structure.	5.a.i The as-built seismic Category I components identified in Table 2.11.3-1 are located in a seismic Category I structure.
	5.a.ii Type tests, analyses, or a combination of type tests and analyses of seismic Category I components will be performed.	5.a.ii A report exists and concludes that the seismic Category I components identified in Table 2.11.3-1 withstand Seismic design basis loads without loss of safety function.
	5.a.iii Inspections will be performed to verify that the as-built seismic Category I components, including the supports and anchorages, are seismically bounded by the tested or analyzed conditions.	5.a.iii A report exists and concludes that the as-built seismic Category I components identified in Table 2.11.3-1, including the supports and anchorages, are seismically bounded by the tested or analyzed conditions.
5.b The seismic Category I piping, including supports, identified in Table 2.11.3-1 withstand seismic design basis loads without loss of safety function.	5.b.i Inspections will be performed to verify that the as-built seismic Category I piping, including supports, is located in the seismic Category I structure.	5.b.i The as-built seismic Category I piping, including supports, identified in Table 2.11.3-1 is located in the seismic Category I structure.

Table 2.11.3-2 (3 of 7)

Design Commitment		Inspections, Tests, Analyses		Acceptance Criteria	
5.b	(cont.)	5.b.ii	Inspections and analyses of the as-built seismic Category I piping, including supports, will be performed.	5.b.ii	A report exists and concludes that the as-built seismic Category I piping, including supports, identified in Table 2.11.3-1 withstand seismic design basis loads without a loss of safety function.
6.a	The Class 1E components identified in Table 2.11.3-1 as being qualified for a harsh environment (and the associated wiring, cables, and terminations) withstand the environmental conditions that would exist before, during and following a design basis accident without loss of safety function for the time required to perform the safety function.	6.a.i	Type tests or a combination of type tests and analyses will be performed on Class 1E components located in a harsh environment.	6.a.i	A report exists and concludes that the Class 1E components identified in Table 2.11.3-1 as being qualified for a harsh environment withstand the environmental conditions that would exist before, during, and following a design basis accident without loss of safety function for the time required to perform the safety function.
		6.a.ii	Inspections will be performed on the as-built Class 1E components (and the associated wiring, cables, and terminations) located in a harsh environment.	6.a.ii	A report exists and concludes that the as-built Class 1E components identified in Table 2.11.3-1 as being qualified for a harsh environment (and the associated wiring, cables, and terminations) are bounded by type tests or a combination of type tests and analyses.
6.b	Each of the Class 1E components identified in Table 2.11.3-1 is powered from its respective Class 1E division.	6.b	Tests will be performed by providing a test signal only one Class 1E division at a time.	6.b	The test signal exists at the at the Class 1E components identified in Table 2.11.3-1 as being powered form the Class 1E division under test.
6.c	Physical separation and electrical isolation are provided (1) between Class 1E divisions and (2) between Class 1E divisions and non-Class 1E divisions.	6.c	Inspection of the as-built Class 1E divisions will be performed.	6.c	Physical separation and electrical isolation exist in accordance with NRC RG 1.75 (1) between Class 1E divisions and (2) between Class 1E divisions and non-Class 1E divisions.

Table 2.11.3-2 (4 of 7)

Design Commitment	Inspections, Tests, Analyses	Acceptance Criteria
7.a The CIS safety-related valves are functionally designed and qualified to perform their safety-related function under the full range of fluid flow, differential pressure, electrical, and temperature conditions up to and including design basis accident conditions.	7.a.i A type test or a combination of type test and analysis will be performed of the CIS safety-related valves.	7.a.i A Functional Qualification Report performed in conformance to ASME QME-1-2007, as accepted in Regulatory Guide 1.100 Revision 3, exists and concludes that the CIS safety-related valves listed in Table 2.11.3-1 are functionally designed and qualified to perform their safety-related function under the full range of fluid flow, differential pressure, electrical, and temperature conditions up to and including design basis accident conditions.
	7.a.ii A diagnostic stroke test and analysis will be performed of the CIS safety-related valves under preoperational temperature, differential pressure, and flow conditions.	7.a.ii Each CIS safety-related valve listed in Table 2.11.3-1 strokes fully open and fully closed by remote operation (or manual operation if a manually operated valve) under preoperational temperature, differential pressure, and flow conditions. Analysis based on sufficient diagnostic data demonstrates that the valves will perform at their design-basis capability as established by the type test performed in accordance with 7.a.i.
	7.a.iii Tests of the as-built check valves will be performed under pre-operational test pressure, temperature, and fluid flow conditions.	7.a.iii Each check valve changes position as indicated in Table 2.11.3-1 under pre-operational test conditions.

Table 2.11.3-2 (5 of 7)

Design Commitment		Inspections, Tests, Analyses		Acceptance Criteria	
7.b	After loss of motive power, MOVs, AOVs, SOVs, and E/H valves identified in Table 2.11.3-1 assume the indicated loss of motive power position.	7.b	Tests of the as-built MOVs, AOVs, SOVs, and E/H valves will be performed under the conditions of loss of motive power.	7.b	Upon loss of motive power, each as-built MOV, AOV, SOV, or E/H valve identified in Table 2.11.3-1 assumes the indicated loss of motive power position.
8.a	Controls exist in the MCR to open and close the MOVs, AOVs, SOVs, and E/H valves identified in Table 2.11.3-1.	8.a	Tests will be performed using the controls in the MCR to open and close the MOVs, AOVs, SOVs, and E/H valves.	8.a	Controls in the as-built MCR open and close the MOVs, AOVs, SOVs, and E/H valves identified in Table 2.11.3-1.
8.b	Controls exist in the RSR to open and close the MOVs, AOVs, SOVs and E/H valves identified in Table 2.11.3-1.	8.b	Tests will be performed using the controls in the RSR to open and close the MOVs, AOVs, SOVs and E/H valves.	8.b	Controls in the as-built RSR open and close the MOVs, AOVs, SOVs and E/H valves identified in Table 2.11.3-1.
8.c	Displays and alarms exist and are retrievable in the MCR as defined in Table 2.11.3-1.	8.c	Inspections of the as-built displays and alarms in the MCR will be performed.	8.c	Displays and alarms exist and are retrieved in the as-built MCR as defined in Table 2.11.3-1.
8.d	Displays and alarms exist and are retrievable in the RSR as defined in Table 2.11.3-1.	8.d	Inspections of the as-built displays and alarms in the RSR will be performed.	8.d	Displays and alarms exist and are retrieved in the as-built RSR as defined in Table 2.11.3-1.
9.	CIV closure times to limit potential releases of radioactivity as low as reasonably achievable are as shown in Table 2.11.3-1.	9.	Tests will be performed to verify as-built CIVs close within the isolation response times.	9.	The as-built CIVs identified in Table 2.11.3-1 close within the required times.
10.	The CIS provides a safety-related function of containment isolation to prevent or limit the release of fission products to the environment.	10.	Tests will be performed to verify the as-built containment isolation valve leakage rates in accordance with 10 CFR Part 50, Appendix J, Type C tests.	10.	The as-built containment isolation valve leak rates are less than the allowable leakage rate specified in 10 CFR Part 50, Appendix J.

Table 2.11.3-2 (6 of 7)

Design Commitment	Inspections, Tests, Analyses	Acceptance Criteria
11. MOVs, AOVs, SOVs, and E/H valves in series on the same containment penetration (whether located inside or outside containment) are powered from different Class 1E divisions.	11. Inspection of the as-built MOVs, AOVs, SOVs, and E/H valves in series on the same containment penetration (whether located inside or outside containment) will be performed.	11. The following MOVs, AOVs, SOVs, and E/H valves in series on the same containment penetration (whether located inside or outside containment) are powered from different Class 1E divisions.

Inside containment	Outside containment
CC-V0249(MOV)	CC-V0250(MOV)
CC-V0297(MOV)	CC-V0296(MOV)
CC-V0301(MOV)	CC-V0302(MOV)
CV-V506(AOV)	CV-V505(AOV)
CV-V522(AOV)	CV-V523(AOV)
CV-V560(AOV)	CV-V561(AOV)
DE-V0005(MOV)	DE-V0006(AOV)
GW-V0001(MOV)	GW-V0002(SOV)
PR-V431(MOV)	PR-V432(MOV)
PX-V0001(SOV)	PX-V0002(SOV)
PX-V0003(SOV)	PX-V0004(SOV)
PX-V0005(SOV)	PX-V0006(SOV)
PX-V0021(SOV)	PX-V0020(SOV)
PX-V0041(MOV)	PX-V0042(MOV)
SI-V653(MOV)	SI-V655(MOV)
SI-V654(MOV)	SI-V656(MOV)
VQ-V0012(MOV)	VQ-V0011(E/H)
VQ-V0013(MOV)	VQ-V0014(E/H)
VQ-V0032(AOV)	VQ-V0031(AOV)
VQ-V0033(AOV)	VQ-V0034(AOV)
WI-V0015(MOV)	WI-V0012(AOV)

Table 2.11.3-2 (7 of 7)

Design Commitment	Inspections, Tests, Analyses	Acceptance Criteria
12. Containment isolation valves outside the containment as listed in Table 2.11.3-1 and as shown in Figure 2.11.3-1, are located as close to the containment as practical, consistent with General Design Criteria 55, 56, and 57.	12. An inspection or analysis will be performed to verify the as-built location of outside containment isolation valves.	12. A report exists and concludes that the as-built outside containment isolation valves listed in Table 2.11.3-1 and shown in Figure 2.11.3-1 are located as close to the containment as practical with consideration of the following: - Access for inspection of welds - Containment leak testing - Replacement - Valve maintenance

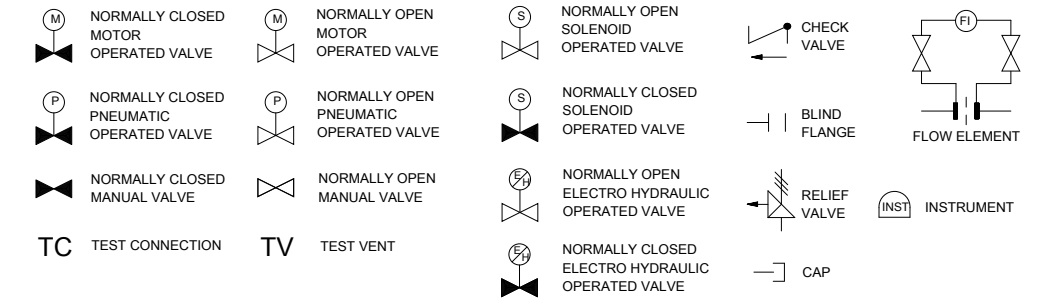

* This test connection / vent may be located outside the containment due to the space limitation of the actual pipe arrangement

** This test connection may be located inside the bypass loop due to the space limitation of actual pipe arrangement

*** The draining of the CIVs utilizes the nearby piping low point drain

VALVE ARRANGEMENT NO.	INSIDE CONTAINMENT	OUTSIDE CONTAINMENT
1		NT, AFWS, DRAIN
2	TV	TC, TV
3		NT, DRAIN

Figure 2.11.3-1 Containment Isolation Valves Functional Arrangement (1 of 9)

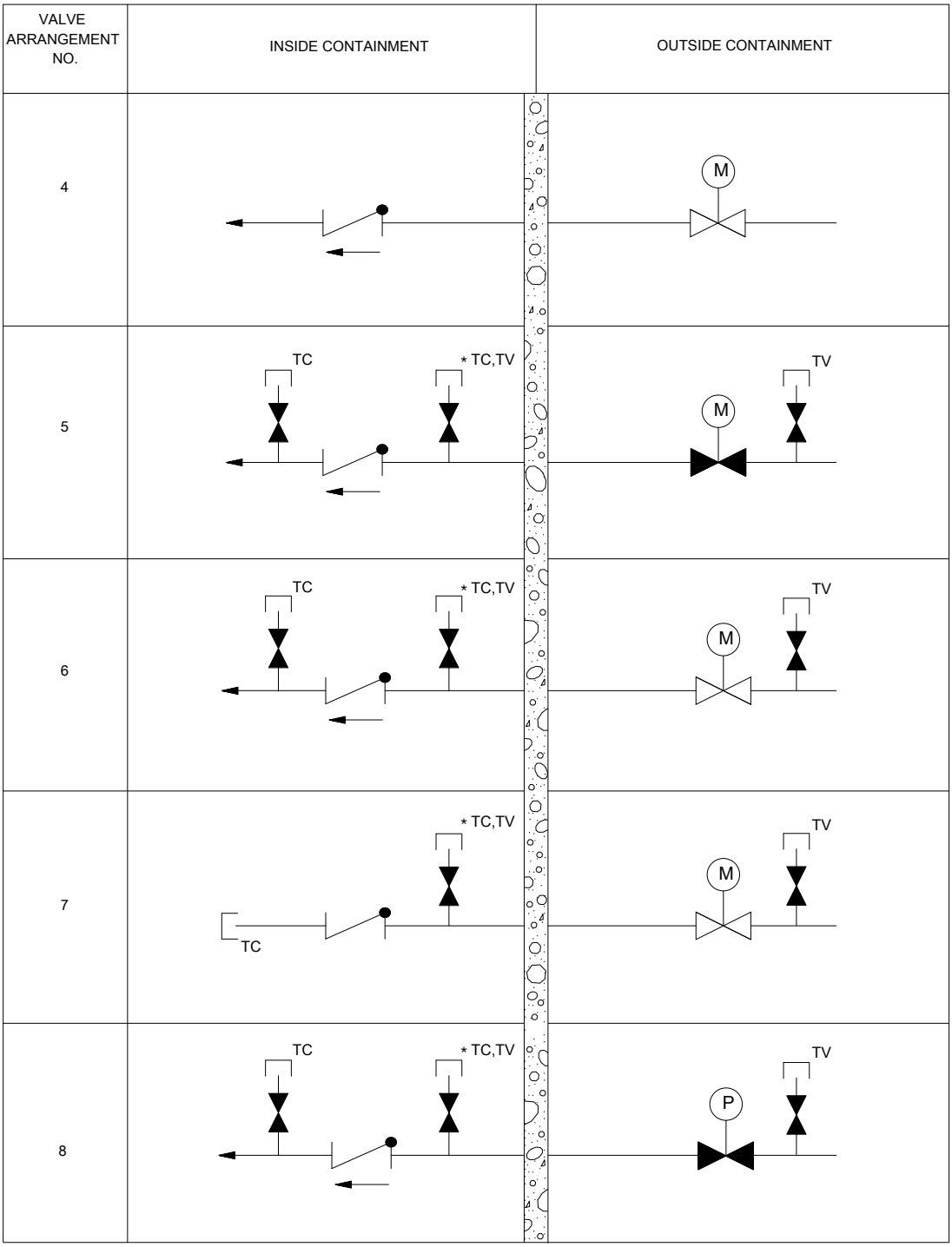

Figure 2.11.3-1 Containment Isolation Valves Functional Arrangement (2 of 9)

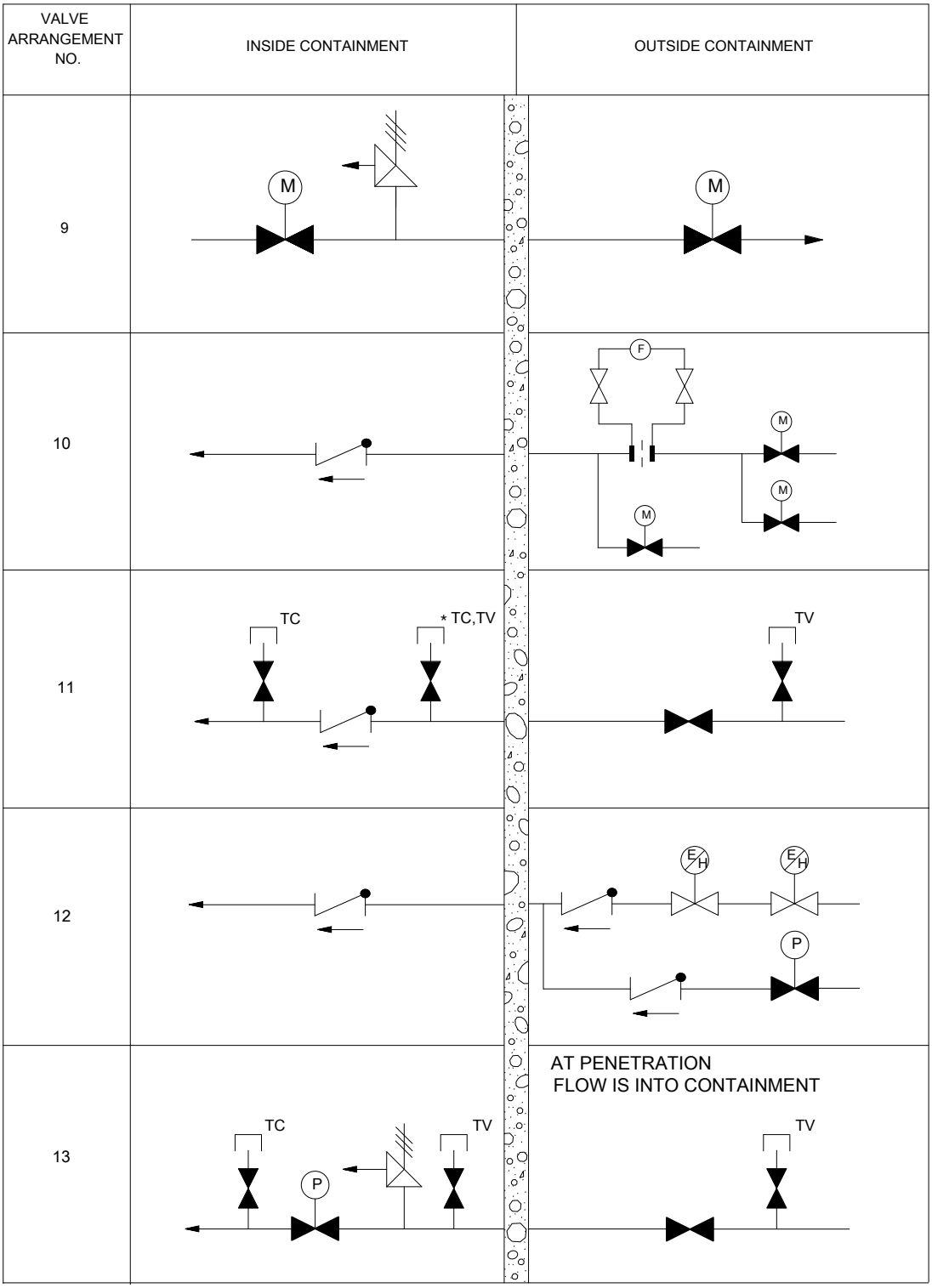

Figure 2.11.3-1 Containment Isolation Valves Functional Arrangement (3 of 9)

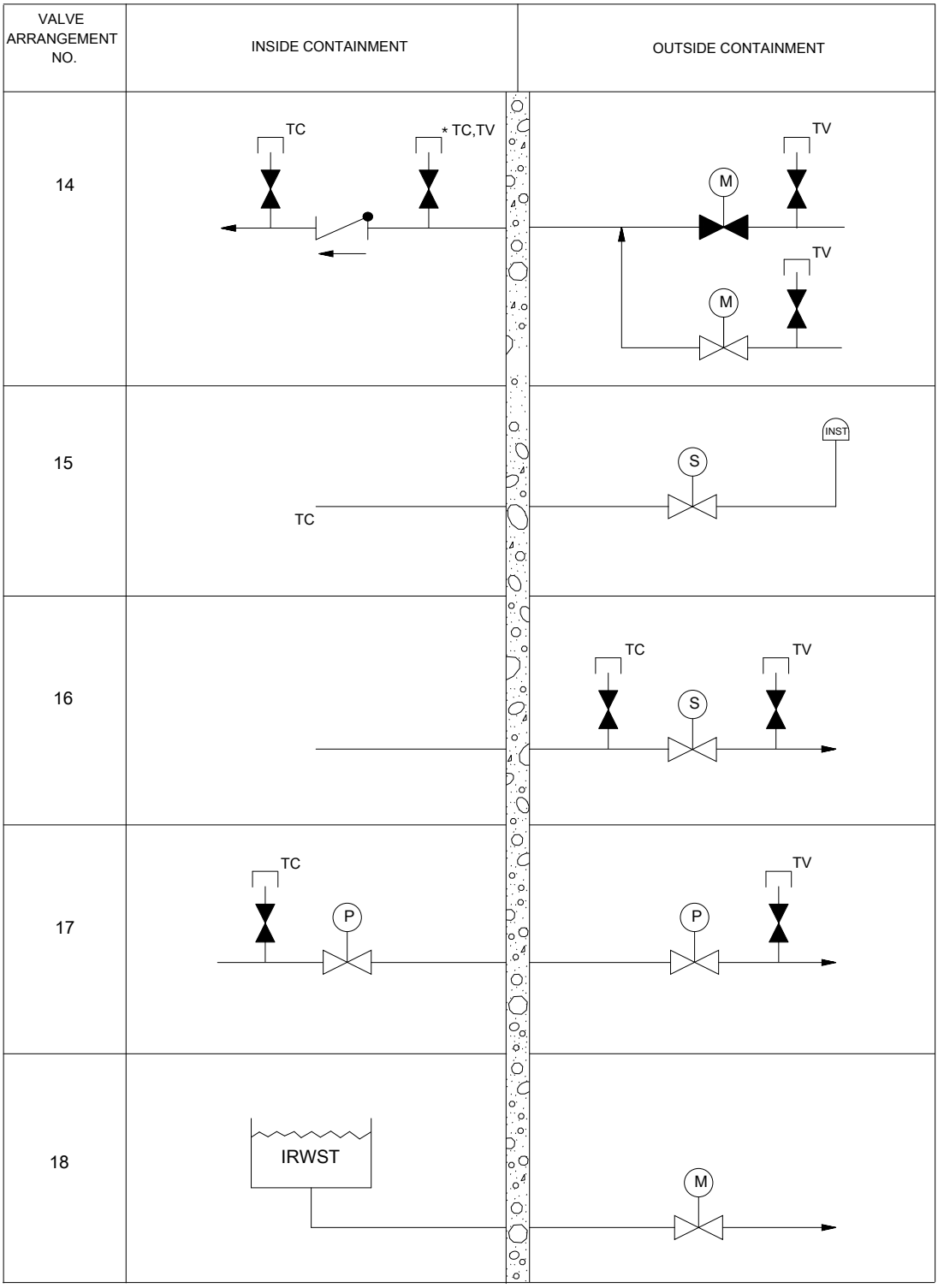

Figure 2.11.3-1 Containment Isolation Valves Functional Arrangement (4 of 9)

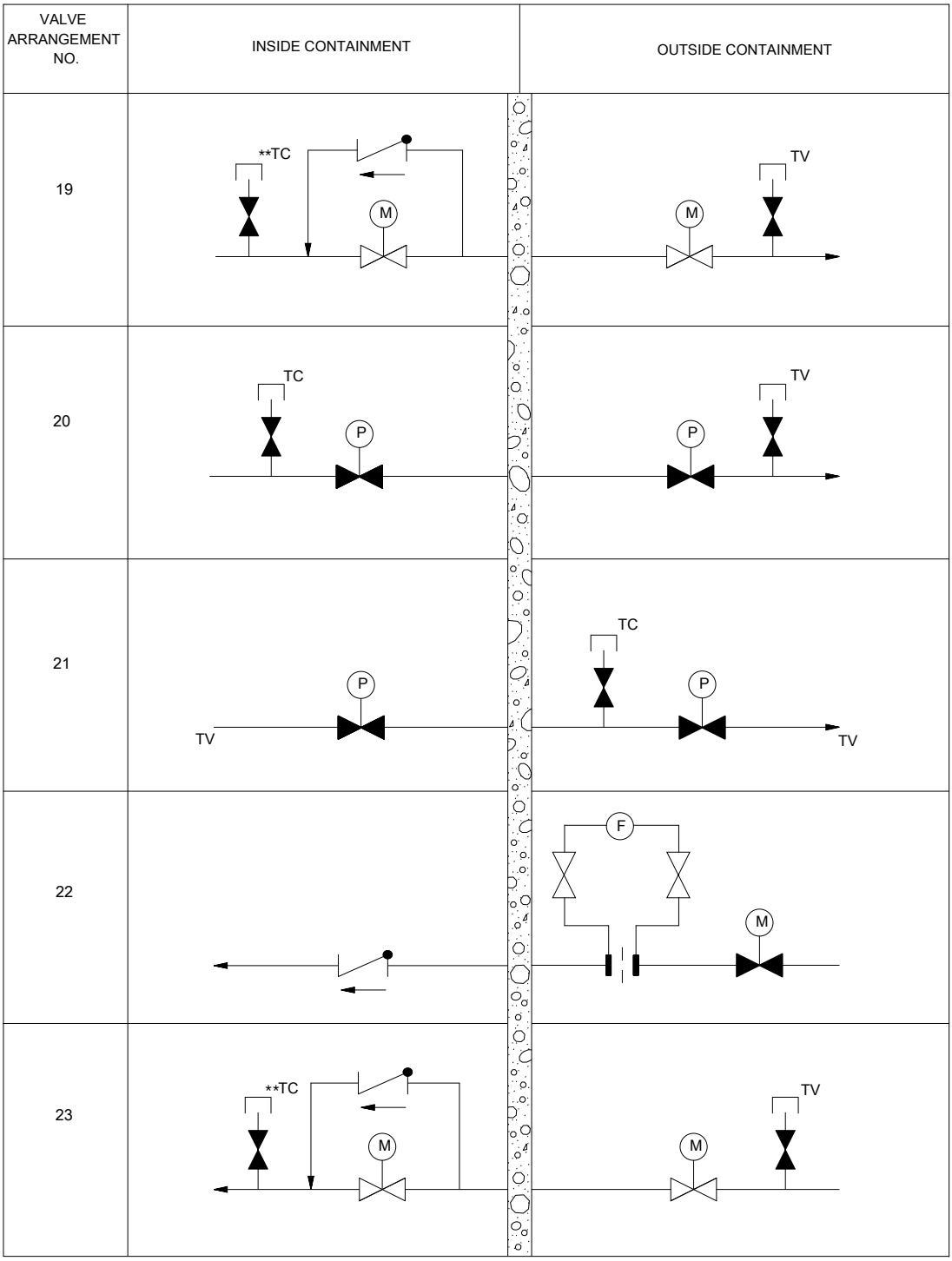

Figure 2.11.3-1 Containment Isolation Valves Functional Arrangement (5 of 9)

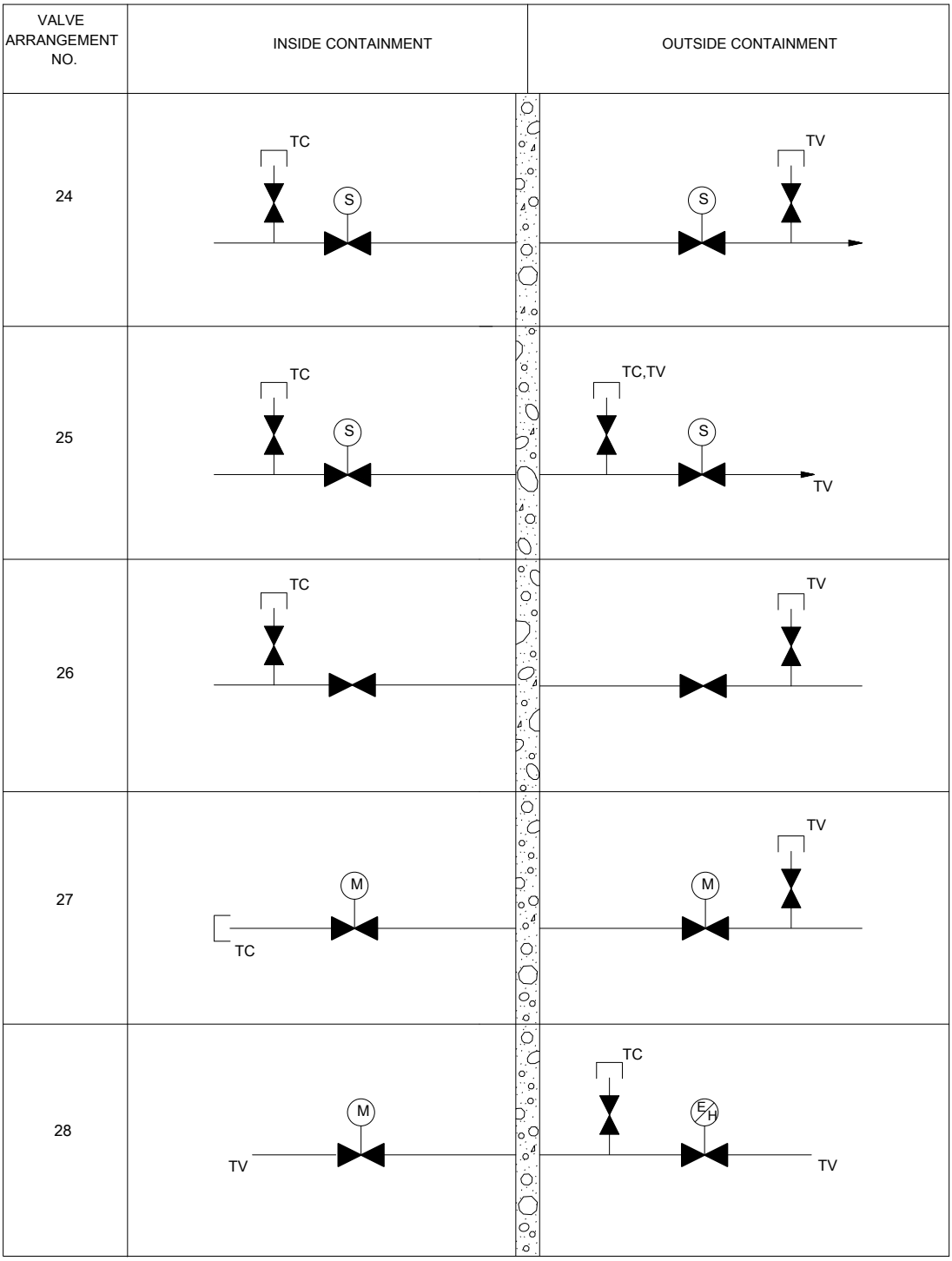

Figure 2.11.3-1 Containment Isolation Valves Functional Arrangement (6 of 9)

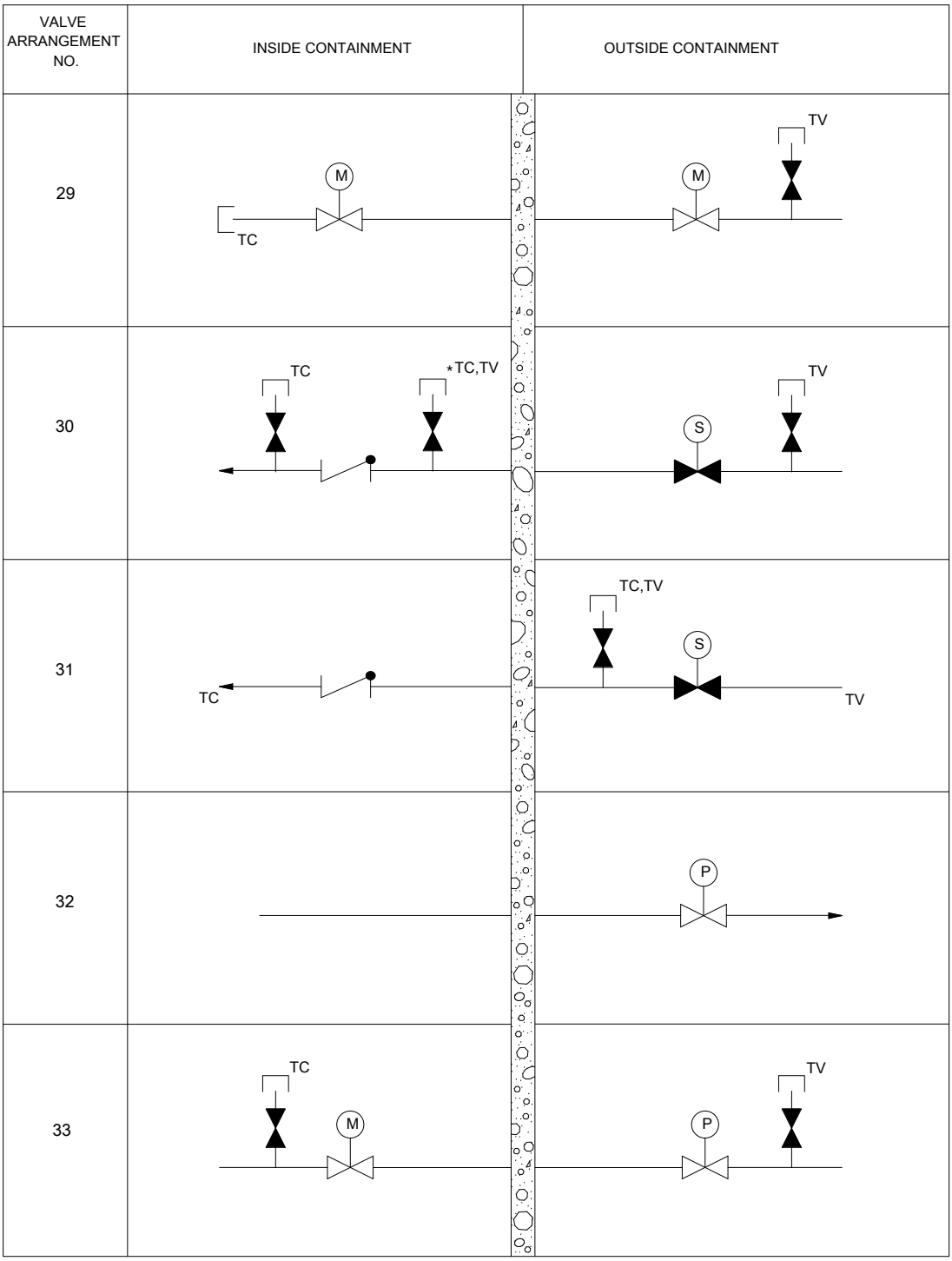

Figure 2.11.3-1 Containment Isolation Valves Functional Arrangement (7 of 9)

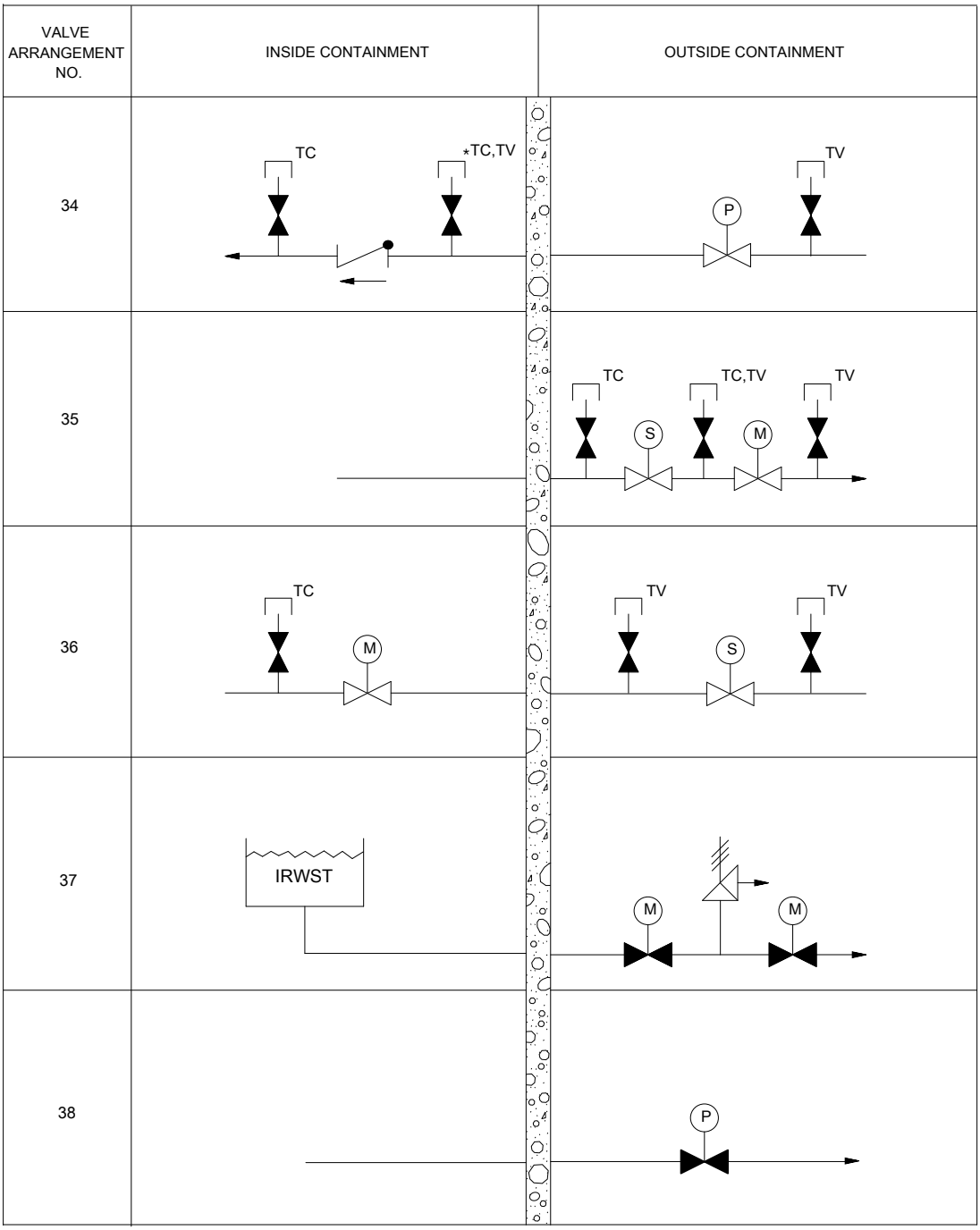

Figure 2.11.3-1 Containment Isolation Valves Functional Arrangement (8 of 9)

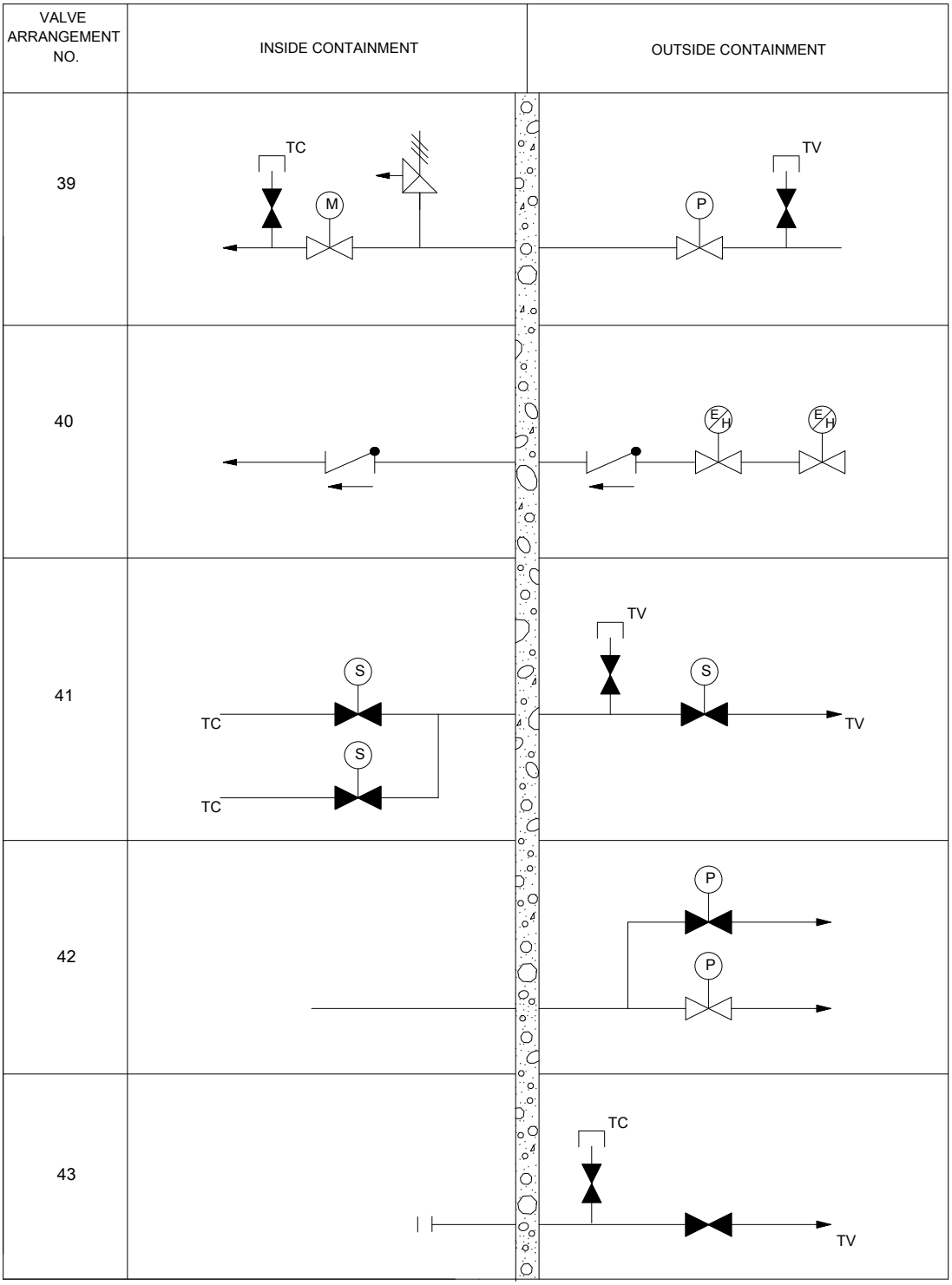

Figure 2.11.3-1 Containment Isolation Valves Functional Arrangement (9 of 9)

2.11.4 Containment Hydrogen Control System and Monitoring System

2.11.4.1 Design Description

The containment hydrogen control system (CHCS) is a non-safety-related system. The CHCS is used to maintain hydrogen gas concentration in containment at a level which precludes an uncontrolled hydrogen and oxygen recombination within containment following beyond design basis accidents.

The CHCS consists of the passive autocatalytic recombiners (PARs) and hydrogen igniters (HIs). The PARs and HIs are designed to control and allow adiabatic controlled burning of hydrogen at fairly low concentration in containment and in-containment refueling water storage tank (IRWST) from exceeding 10 volume percent during a degraded core accident with 100 percent fuel clad metal-water reaction.

The hydrogen monitoring system (CHMS) consists of hydrogen analyzer cabinets and monitoring cabinets. Each hydrogen analyzer cabinet includes a hydrogen detector located outside the containment and performs sampling, transmission, and measurement of the hydrogen concentration from the air sample extracted from inside the containment and in-containment refueling water storage tank. The monitoring cabinet performs data collection, calculation, and automatic or manual operation of all analyzers.

To meet above functional requirements, the CHCS and the CHMS are designed as follows:

1. The functional arrangement of the CHCS is as described in the Design Description of Subsection 2.11.4.1 and in Table 2.11.4-1 and as shown in Figure 2.11.4-1.

2. The seismic Category I equipment identified in Table 2.11.4-1, including the supports and anchorages, can withstand seismic design basis loads without loss of function.

3. The CHCS provides PARs complemented by HIs to control the containment hydrogen concentration to maintain containment integrity during beyond design basis accidents.

4. Sufficient electrical power to operate the HIs can be individually supplied from each of the following sources: the Class 1E division, the emergency diesel generator, the AAC generator, and the Class 1E DC battery.

5.a Controls exist in the MCR to start and stop the HIs identified in Table 2.11.4-1.

5.b Controls exist in the RSR to start and stop the HIs identified in Table 2.11.4-1.

5.c Displays and alarms for hydrogen concentration measured by a hydrogen concentration detector of the containment hydrogen monitoring system exist and are retrievable in the MCR, as defined in Table 2.11.4-2.

5.d Displays and alarms for hydrogen concentration measured by a hydrogen concentration detector of the containment hydrogen monitoring system exist and are retrievable in the RSR, as defined in Table 2.11.4-2.

6. The Class 1E components and instruments identified in Tables 2.11.4-1 and 2.11.4-2 as being qualified for a harsh environment (and the associated wiring, cables, and terminations) are capable of withstanding the environmental conditions that would exist before, during, and following a design basis accident without loss of safety function for the time required to perform the safety function.

7. The CHCS non-metallic parts, materials, and lubricants used in safety-related mechanical equipment perform their safety-related function up to the end of their qualified life in the design basis harsh environmental conditions (both internal service conditions and external environmental conditions) experienced during normal operations, anticipated operational occurrences, design-basis accidents, and post accident conditions.

2.11.4.2 Inspections, Tests, Analyses, and Acceptance Criteria

The inspections, tests, analyses, and associated acceptance criteria for the containment hydrogen control system are specified in Table 2.11.4-3.

Table 2.11.4-1

Containment Hydrogen Control System Components List

Component Name	Item No.	General Location	ASME Section III Class	Seismic Category	Class 1E/ Harsh Envir. Qual.	Display/ Control at MCR	Display/ Control at RSR	Control Signal	Active Safety Function	Loss of Motive Power Position
Large PAR	HR01A/01B ~ HR04A/04B	Containment Dome Area	-	I	-/-	-/-	-/-	-	No	-
	HR05A/05B ~ HR06A/06B	Steam Generator Compartment								
	HR07A/07B ~ HR08A/08B	Upper Compartment								
Medium PAR	HR09A/09B ~ HR10A/10B	Inside IRWST								
	HR11A/11B ~ HR13A/13B	Lower Compartment								
Small PAR	HR14A/14B	Reactor Detector Tube Compartment, Cavity Region								
	HR15A/15B	Regenerative heat exchanger and Pressurizer Compartment								
Hydrogen Igniter	HI01	Cavity Access Area	-	I	No/-	Yes/Yes	Yes/Yes	-	No	-
	HI02	Regenerative heat exchanger Room								
	HI03 ~ HI04	Pressurizer Compartment								
	HI05 ~ HI08	Steam Generator Compartment								
Containment Temperature Element	CM-TE-031A	Containment	-	I	Yes/Yes	Yes/No	Yes/No	-	No	-

(1) Dash (-) indicates not applicable.

Table 2.11.4-2

Containment Hydrogen Monitoring System Instrument List

Instrument Name	Tag No.	Location	ASME Section III Class	Seismic Category	Class 1E/ Harsh Envir. Qual.	Range	Pressure Range	Display & Alarm at MCR/RSR/ Local
Containment Hydrogen Concentration	AE-005,007	Containment Building 229′-0″, AZ. 330° and 215°, respectively	-	I	Yes/Yes	0~15 % Volume	(-) 0.352 kg/cm^2G ~ Maximum Containment Design Pressure	Yes/Yes/Yes
IRWST Hydrogen Concentration	AE-006,008	Containment Building 96′-9″, AZ. 27° and 215°, respectively	-	I	Yes/Yes	0~15 % Volume	(-) 0.352 kg/cm^2G ~ Maximum Containment Design Pressure	Yes/Yes/Yes

(1) Dash (-) indicates not applicable

Table 2.11.4-3 (1 of 4)

Containment Hydrogen Control System ITAAC

Design Commitment	Inspections, Tests, Analyses	Acceptance Criteria
1. The functional arrangement of the CHCS is as described in the Design Description of Subsection 2.11.4.1 and in Table 2.11.4-1 and as shown in Figure 2.11.4-1.	1. Inspection of the as-built CHCS will be conducted.	1. The as-built CHCS conforms with the functional arrangement as described in the Design Description of Subsection 2.11.4.1 and in Table 2.11.4-1 and as shown in Figure 2.11.4-1.
2. The seismic Category I equipment identified in Table 2.11.4-1, including the supports and anchorages, can withstand seismic design basis loads without loss of function.	2.a Inspections will be performed to verify that the as-built seismic Category I equipment is located in seismic Category I structures.	2.a The as-built seismic Category I equipment identified in Table 2.11.4-1 is located in seismic Category I structures.
	2.b Type tests, analyses, or a combination of type tests and analyses of seismic Category I equipment will be performed.	2.b A report exists and concludes that the seismic Category I equipment identified in Table 2.11.4-1 can withstand seismic design basis loads.
	2.c Inspections will be performed to verify that the as-built seismic Category I equipment, including the supports and anchorages, are seismically bounded by the tested or analyzed conditions.	2.c A report exists and concludes that the as-built equipment, including the supports and anchorages, are seismically bounded by the tested or analyzed conditions.
3. The CHCS provides PARs complemented by HIs to control the containment hydrogen concentration to maintain containment integrity during beyond design basis accidents.	3.a Inspection of the as-built containment for the number of PARs and hydrogen igniters and their general location, as described in Table 2.11.4-1 will be performed.	3.a At least thirty PARs and eight hydrogen igniters are provided inside containment.

Table 2.11.4-3 (2 of 4)

Design Commitment	Inspections, Tests, Analyses	Acceptance Criteria
3. (cont.)	3.b Testing will be performed on the hydrogen igniters. Analysis will be performed on the as-built PARs and hydrogen igniters.	3.b For hydrogen igniters, the surface temperature exceeds 1,700°F. A report exists and concludes that during beyond design basis accidents, the hydrogen depletion rates for the installed PARs and HIs will maintain containment hydrogen concentration, both locally and globally, of less than or equal to 10 percent by volume, or avoids DDT or detonation in order to maintain containment integrity.
4. Sufficient electrical power to operate the HIs can be individually supplied from each of the following sources: the Class 1E division, the emergency diesel generator, the AAC generator, and the Class 1E DC battery.	4. Tests will be performed on the as-built HIs.	4. Sufficient electrical power to operate the as-built HIs listed in Table 2.11.4-1 is individually supplied from each of the following sources: the class 1E division, the emergency diesel generator, the AAC generator, and the Class 1E DC battery.
5.a Controls exist in the MCR to start and stop the HIs identified in Table 2.11.4-1.	5.a Tests will be performed using the controls in the MCR to start and stop the HIs.	5.a Controls in the as-built MCR start and stop the hydrogen igniters listed in Table 2.11.4-1.
5.b Controls exist in the RSR to start and stop the HIs identified in Table 2.11.4-1.	5.b Tests will be performed using the controls in the RSR to start and stop the HIs.	5.b Controls in the as-built RSR start and stop the hydrogen igniters listed in Table 2.11.4-1.

Table 2.11.4-3 (3 of 4)

Design Commitment	Inspections, Tests, Analyses	Acceptance Criteria
5.c Displays and alarms for hydrogen concentration measured by a hydrogen concentration detector of the containment hydrogen monitoring system exist and are retrievable in the MCR, as defined in Table 2.11.4-2.	5.c Inspections of the as-built displays and alarms in the MCR will be performed.	5.c Displays and alarms exist and are retrieved in the MCR as defined in Tables 2.11.4-2.
5.d Displays and alarms for hydrogen concentration measured by a hydrogen concentration detector of the containment hydrogen monitoring system exist and are retrievable in the RSR, as defined in Table 2.11.4-2.	5.d Inspections of the as-built displays and alarms in the RSR will be performed.	5.d Displays and alarms exist and are retrieved in the RSR as defined in Table 2.11.4-2.
6. The Class 1E components and instruments identified in Tables 2.11.4-1 and 2.11.4-2 as being qualified for a harsh environment (and the associated wiring, cables, and terminations) are capable of withstanding the environmental conditions that would exist before, during, and following a design basis accident without loss of safety function for the time required to perform the safety function.	6.a Type tests or a combination of type tests and analyses will be performed on Class 1E components and instruments located in a harsh environment.	6.a A report exists and concludes that the Class 1E components and instruments identified in Tables 2.11.4-1 and 2.11.4-2 as being qualified for a harsh environment withstand the environmental conditions that would exist before, during, and following a design basis accident without loss of safety function for the time required to perform the safety function.
	6.b Inspections will be performed on the as-built Class 1E components and instruments (and the associated wiring, cables, and terminations) located in a harsh environment.	6.b A report exists and concludes that the as-built Class 1E components and instruments identified in Tables 2.11.4-1 and 2.11.4-2 as being qualified for a harsh environment (and the associated wiring, cables, and terminations) are bounded by type tests, or a combination of type tests and analyses.

Table 2.11.4-3 (4 of 4)

Design Commitment	Inspections, Tests, Analyses	Acceptance Criteria
7. The CHCS non-metallic parts, materials, and lubricants used in safety-related mechanical equipment perform their safety-related function up to the end of their qualified life in the design basis harsh environmental conditions (both internal service conditions and external environmental conditions) experienced during normal operations, anticipated operational occurrences, design-basis accidents, and post accident conditions.	7. A type test or a combination of type test and analysis will be performed of the CHCS non-metallic parts, materials, and lubricants used in safety-related mechanical equipment.	7. A report exists and concludes that the non-metallic parts, materials, and lubricants used in safety-related mechanical equipment listed in Table 2.11.4-1 perform their safety-related function up to the end of their qualified life under the design basis harsh environmental conditions (both internal service conditions and external environmental conditions) experienced during normal operations, anticipated operational occurrences, design-basis accidents, and post accident conditions.

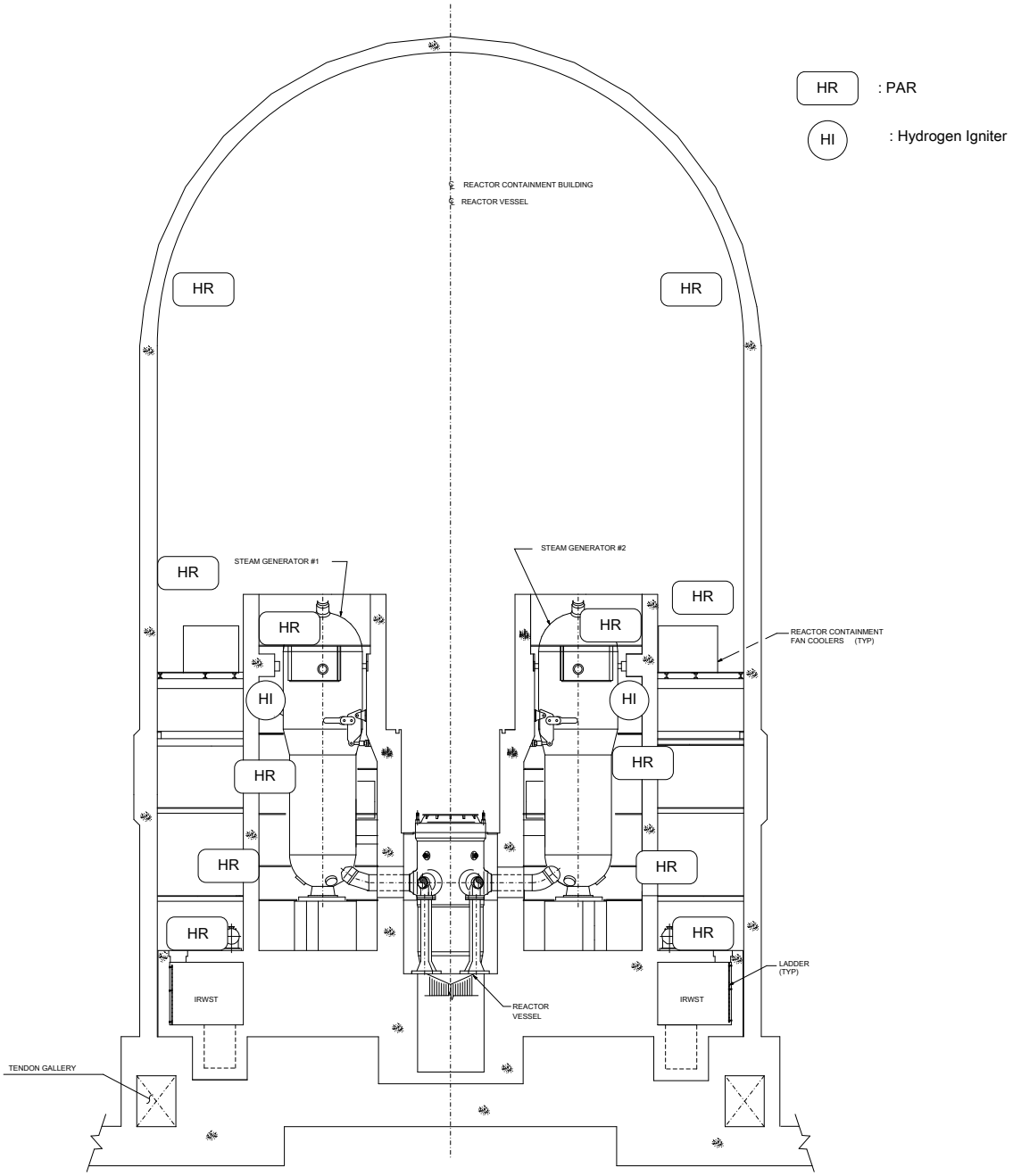

Figure 2.11.4-1 Containment Hydrogen Control System Functional Arrangement

2.12 Physical Security Hardware

2.12.1 Design Description

The physical security system provides physical features to detect, delay, assist response to, and defend against the design basis threat (DBT) for radiological sabotage. The physical security system consists of physical barriers, intrusion detection, surveillance, communications, alarm stations, and power supplies. These design descriptions only address the portions of the design of physical security systems that are included within the scope of the APR1400 DC document, and they provide the design descriptions necessary to meet all requirements specified in the corresponding requirement of 10 CFR 73.55. Additional design descriptions will be provided by the COL applicant for items where the APR1400 design descriptions provided only address a portion of the requirement for design in 10 CFR 73.55 and other design descriptions must be further developed by a COL applicant for site-specific design of the physical security system in order to complete the physical security ITAAC. The details of the design of physical security system are categorized as sensitive security information and are further described in APR1400-E-A-NR-14002-P technical report which is incorporated by reference.

1.a Vital equipment is located only within a vital area.

1.b Access to vital equipment requires passage through the vital area barrier at least two physical barriers.

2.a Physical barriers for the protected area perimeter. (This item is a site specific design description that the COL applicant will be providing and it will be similar to 2(a) in Appendix A to NUREG 0800 SRP 14.3.12 but the actual description will be written by the COL applicant.)

2.b Penetrations through the protected area barrier. (This item is a site specific design description that the COL applicant will be providing and it will be similar to 2(b) in Appendix A to NUREG 0800 SRP 14.3.12 but the actual description will be written by the COL applicant.)

2.c Unattended openings that intersect a security boundary. (This item is a site specific design description that the COL applicant will be providing and it will be similar to 2(c) in Appendix A to NUREG 0800 SRP 14.3.12 but the actual description will be written by the COL applicant.)

3.a Isolation zones for outdoor areas adjacent to the protected area. (This item is a site specific design description that the COL applicant will be providing and it will be similar to 3(a) in Appendix A to NUREG 0800 SRP 14.3.12 but the actual description will be written by the COL applicant.)

3.b Isolation zones will be monitored with intrusion detection and assessment equipment. (This item is a site specific design description that the COL applicant will be providing and it will be similar to 3(b) in Appendix A to NUREG 0800 SRP 14.3.12 but the actual description will be written by the COL applicant.)

3.c Areas where permanent buildings do not allow for an isolation zone will be monitored with intrusion detection equipment. (This item is a site specific design description that the COL applicant will be providing and it will be similar to 3(c) in Appendix A to NUREG 0800 SRP 14.3.12 but the actual description will be written by the COL applicant.)

4.a The perimeter intrusion detection system detects penetration or attempted penetration of the protected area perimeter barrier. (This item is a site specific design description that the COL applicant will be providing and it will be similar to 4(a) in Appendix A to NUREG 0800 SRP 14.3.12 but the actual description will be written by the COL applicant.)

4.b Included in 11.a below.

4.c The intrusion detection equipment at the protected area remains operable from a UPS during a loss of normal power. (This item is a site specific design description that the COL applicant will be providing and it will be similar to 4(c) in Appendix A to NUREG 0800 SRP 14.3.12 but the actual description will be written by the COL applicant.)

5.a Isolation zones and exterior areas within the protected area are provided with illumination to permit observation of abnormal presence or activity of persons or vehicles.

5.b The security alarm stations are provided with illumination to perform security functions.

6. The external walls, doors, ceilings, and floors in the main control room, the central alarm station, the secondary alarm station, and the location within which the last access control function for access to the protected area is performed are bullet-resistant to at least Underwrites Laboratory Ballistic Standard 752, level 4.

7. The vehicle barrier system is installed and located at the necessary standoff distance to protect against the design basis threat (DBT) vehicle bombs.

8.a Access control points will be established at the protected area to control personnel and vehicle access. (This item is a site specific design description that the COL applicant will be providing and it will be similar to 8(a) in Appendix A to NUREG 0800 SRP 14.3.12 but the actual description will be written by the COL applicant.)

8.b Access control points will have search equipment for detecting firearms, explosives, incendiary devices or other items. (This item is a site specific design description that the COL applicant will be providing and it will be similar to 8(b) in Appendix A to NUREG 0800 SRP 14.3.12 but the actual description will be written by the COL applicant.)

9. The access control system will use a numbered photo identification badge. (This item is a site specific design description that the COL applicant will be providing and it will be similar to 9 in Appendix A to NUREG 0800 SRP 14.3.12 but the actual description will be written by the COL applicant.)

10. Vital areas are locked and alarmed with active intrusion detection systems that annunciate in the central and secondary alarm stations upon intrusion into a vital area.

11.a Security alarm annunciation and video assessment information is displayed concurrently in the central alarm station and the secondary alarm station, and the video image recording with real time playback capability can provide assessment of activities before and after each alarm annunciation within the perimeter barrier.

11.b The central and secondary alarm stations are located inside the protected area and the interior of each alarm station is not visible from the perimeter of the protected area.

11.c The alarm system will not allow the status of a detection point, locking mechanism or access control device to be changed without the knowledge and concurrence of the alarm station operator in the other alarm station.

11.d The central and secondary alarm stations are designed and equipped such that, in the event of a single act, in accordance with the design basis threat of radiological sabotage, the design enables the survivability of equipment needed to maintain the functional capability of either alarm station to detect and assess alarms and communicate with onsite and offsite response personnel.

12. Secondary security power supply system for alarm annunciator equipment and non-portable communications equipment is located within a vital area.

13.a Security alarm devices including transmission lines to annunciators are tamper indicating and self-checking (e.g., an automatic indication is provided when failure of the alarm system or a component occurs, or when on standby power). Alarm annunciation shall indicate the type of alarm (e.g., intrusion alarms and emergency exit alarm) and location.

13.b Intrusion detection and assessment systems concurrently provide visual displays and audible annunciation of alarms in the central and secondary alarm stations.

14. Recording Equipment will record onsite security alarm annunciation, including the location of the alarm, false alarm, alarm check, and tamper indication; and the type of alarm, location, alarm circuit, date, and time.

15. Emergency exits through the protected area and vital area boundaries are locked, alarmed, and equipped with a mechanism to allow for emergency egress.

16.a The central and secondary alarm stations have conventional (landline) telephone service with the main control room and local law enforcement authorities.

16.b The central and secondary alarm stations are capable of continuous communications with security personnel.

16.c Non-portable communication equipment in the central and secondary alarm stations remains operable from an independent power source in the event of loss of normal power.

2.12.2 Inspections, Tests, Analyses, and Acceptance Criteria

Table 2.12-1 provides the ITAAC for the physical security hardware.

Table 2.12-1 (1 of 9)

Physical Security Hardware ITAAC

Design Commitment		Inspections, Tests, Analyses		Acceptance Criteria	
1.a	Vital equipment is located only within a vital area.	1.a	Inspection will be performed to confirm that vital equipment is located within a vital area.	1.a	All vital equipment is located only within a vital area.
1.b	Access to vital equipment requires passage through the vital area barrier.	1.b	Inspection will be performed to confirm that access to vital equipment requires passage through the vital area barrier.	1.b	Vital equipment is located within a protected area such that access to vital equipment requires passage through the vital area barrier.
2.a	Physical barriers for the protected area perimeter. (This item is a site specific design description that the COL applicant will be providing and it will be similar to 2(a) in Appendix A to NUREG 0800 SRP 14.3.12 but the actual description will be written by the COL applicant.)				
2.b	Penetrations through the protected area barrier. (This item is a site specific design description that the COL applicant will be providing and it will be similar to 2(b) in Appendix A to NUREG 0800 SRP 14.3.12 but the actual description will be written by the COL applicant.)				

Table 2.12-1 (2 of 9)

Design Commitment		Inspections, Tests, Analyses	Acceptance Criteria
2.c	Unattended openings that intersect a security boundary. (This item is a site specific design description that the COL applicant will be providing and it will be similar to 2(c) in Appendix A to NUREG 0800 SRP 14.3.12 but the actual description will be written by the COL applicant.)		
3.a	Isolation zones for outdoor areas adjacent to the protected area. (This item is a site specific design description that the COL applicant will be providing and it will be similar to 3(a) in Appendix A to NUREG 0800 SRP 14.3.12 but the actual description will be written by the COL applicant.)		
3.b	Isolation zones will be monitored with intrusion detection and assessment equipment. (This item is a site specific design description that the COL applicant will be providing and it will be similar to 3(b) in Appendix A to NUREG 0800 SRP 14.3.12 but the actual description will be written by the COL applicant.)		

Table 2.12-1 (3 of 9)

Design Commitment	Inspections, Tests, Analyses	Acceptance Criteria
3.c Areas where permanent buildings do not allow for an isolation zone will be monitored with intrusion detection equipment. (This item is a site specific design description that the COL applicant will be providing and it will be similar to 3(c) in Appendix A to NUREG 0800 SRP 14.3.12 but the actual description will be written by the COL applicant.)		
4.a The perimeter intrusion detection system detects penetration or attempted penetration of the protected area perimeter barrier. (This item is a site specific design description that the COL applicant will be providing and it will be similar to 4(a) in Appendix A to NUREG 0800 SRP 14.3.12 but the actual description will be written by the COL applicant.)		
4.b Included in 11.a below		

Table 2.12-1 (4 of 9)

Design Commitment	Inspections, Tests, Analyses	Acceptance Criteria
4.c The intrusion detection equipment at the protected area remains operable from a UPS during a loss of normal power. (This item is a site specific design description that the COL applicant will be providing and it will be similar to 4(c) in Appendix A to NUREG 0800 SRP 14.3.12 but the actual description will be written by the COL applicant.)		
5.a Isolation zones and exterior areas within the protected area are provided with illumination to permit observation of abnormal presence or activity of persons or vehicles.	5.a Inspection of the illumination in the isolation zones and external areas of the protected area will be performed.	5.a The illumination level in isolation zones and exterior areas within the protected area is 0.2 foot-candle measured horizontally at ground level or, alternatively, sufficient to permit observation.
5.b The security alarm stations are provided with illumination to perform security functions.	5.b Inspection of the illumination for the security alarm stations will be performed.	5.b The emergency illumination level for the security alarm stations is at least 10 foot-candles.
6. The external walls, doors, ceilings, and floors in the main control room, the central alarm station, the secondary alarm station, and the location within which the last access control function for access to the protected area is performed are bullet-resistant to at least Underwrites Laboratory Ballistic Standard 752, level 4.	6. Inspections and/or analysis of the central and secondary alarm station and the location within which the last access control function for access to the protected area is performed will be performed.	6. The external walls, doors, ceilings, and floors in the main control room, the central alarm station, the secondary alarm station, and the location within which the last access control function for access to the protected area is performed are bullet-resistant to at least Underwrites Laboratory Ballistic Standard 752, level 4.

Table 2.12-1 (5 of 9)

Design Commitment	Inspections, Tests, Analyses	Acceptance Criteria
7. The vehicle barrier system is installed and located at the necessary stand-off distance to protect against the design basis threat (DBT) vehicle bombs.	7. Inspections and analysis will be performed for the vehicle barrier system.	7. The vehicle barrier system will protect against the DBT vehicle bombs based upon the stand-off distance of the system.
8.a Access control points will be established at the protected area to control personnel and vehicle access. (This item is a site specific design description that the COL applicant will be providing and it will be similar to 8(a) in Appendix A to NUREG 0800 SRP 14.3.12 but the actual description will be written by the COL applicant.)		
8.b Access control points will have search equipment for detecting firearms, explosives, incendiary devices or other items. (This item is a site specific design description that the COL applicant will be providing and it will be similar to 8(b) in Appendix A to NUREG 0800 SRP 14.3.12 but the actual description will be written by the COL applicant.)		

Table 2.12-1 (6 of 9)

Design Commitment	Inspections, Tests, Analyses	Acceptance Criteria
9. The access control system will use a numbered photo identification badge. (This item is a site specific design description that the COL applicant will be providing and it will be similar to 9 in Appendix A to NUREG 0800 SRP 14.3.12 but the actual description will be written by the COL applicant.)		
10. Vital areas are locked and alarmed with active intrusion detection systems that annunciate in the central and secondary alarm stations upon intrusion into a vital area.	10. An inspection of the as-built vital areas and central and secondary alarm stations are performed.	10. Vital areas are locked and alarmed with active intrusion detection systems and intrusion is detected and annunciated in both the central and secondary alarm stations.
11.a Security alarm annunciation and video assessment information is displayed concurrently in the central alarm station and the secondary alarm station, and the video image recording with real time playback capability can provide assessment of activities before and after each alarm annunciation within the perimeter barrier.	11.a Test, inspection, or a combination of test and inspections of the installed systems will be performed	11.a Security alarm annunciation and video assessment information is displayed concurrently in the central alarm station and the secondary alarm station, and the video image recording with real time playback capability provides assessment of activities before and after alarm annunciation within the perimeter barrier.
11.b The central and secondary alarm stations are located inside the protected area and the interior of each alarm station is not visible from the perimeter of the protected area.	11.b Inspections of the central and secondary alarm stations will be performed.	11.b The central and secondary alarm stations are located inside the protected area and the interior of each alarm station is not visible from the perimeter of the protected area.

Table 2.12-1 (7 of 9)

Design Commitment	Inspections, Tests, Analyses	Acceptance Criteria
11.c The alarm system will not allow the status of a detection point, locking mechanism or access control device to be changed without the knowledge and concurrence of the alarm station operator in the other alarm station.	11.c Tests, inspections, or a combination of tests and inspections of intrusion detection equipment and access control equipment will be performed.	11.c The alarm system will not allow the status of a detection point, locking mechanism or access control device to be changed without the knowledge and concurrence of the alarm station operator in the other alarm station.
11.d The central and secondary alarm stations are designed and equipped such that, in the event of a single act, in accordance with the design basis threat of radiological sabotage, the design enables the survivability of equipment needed to maintain the functional capability of either alarm station to detect and assess alarms and communicate with onsite and offsite response personnel.	11.d Inspections and/or analysis of the central and secondary alarm station will be performed.	11.d The central and secondary alarm stations are designed and equipped such that, in the event of a single act, in accordance with the design basis threat of radiological sabotage, equipment needed to maintain the functional capability of either alarm station to detect and assess alarms and communicate with onsite and offsite response personnel exists.
12. Secondary security power supply system for alarm annunciator equipment and non-portable communications equipment is located within the vital area.	12. An inspection will be performed to ensure that the location of the secondary security power supply equipment for alarm annunciator equipment and non-portable communications equipment is within a vital area.	12. Secondary security power supply equipment for alarm annunciator equipment and non-portable communication equipment is located within a vital area.

Table 2.12-1 (8 of 9)

Design Commitment	Inspections, Tests, Analyses	Acceptance Criteria
13.a Security alarm devices, including transmission lines to annunciators, are tamper indicating and self-checking (e.g., an automatic indication is provided when failure of the alarm system or a component occurs, or when on standby power). Alarm annunciation shall indicate the type of alarm (e.g., intrusion alarms and emergency exit alarm) and location.	13.a A test will be performed to verify that security alarms, including transmission lines to annunciators, are tamper indicating and self-checking (e.g., an automatic indication is provided when failure of the alarm system or a component occurs, or when on standby power) and that alarm annunciation indicates the type of alarm (e.g., intrusion alarms and emergency exit alarms) and location.	13.a A report exists and concludes that security alarm devices, including transmission lines to annunciators, are tamper indicating and self-checking (e.g., an automatic indication is provided when failure of the alarm system or a component occurs, or when the system is on standby power) and that alarm annunciation indicates the type of alarm (e.g., intrusion alarms and emergency exit alarms) and location.
13.b Intrusion detection and assessment systems concurrently provide visual displays and audible annunciation of alarms in the central and secondary alarm stations.	13.b Tests will be performed on intrusion detection and assessment equipment.	13.b The intrusion detection system concurrently provides visual displays and audible annunciations of alarms in both the central and secondary alarm stations.
14. Recording Equipment will record onsite security alarm annunciation, including the location of the alarm, false alarm, alarm check, and tamper indication; and the type of alarm, location, alarm circuit, date, and time.	14. Test, analysis, or a combination of test and analysis will be performed to ensure that equipment is capable of recording each onsite security alarm annunciation, including the location of the alarm, false alarm, alarm check, and tamper indication; and the type of alarm, location, alarm circuit, date, and time.	14. A report exists and concludes that equipment is capable of recording each onsite security alarm annunciation, including the location of the alarm, false alarm, alarm check, and tamper indication; and the type of alarm, location, alarm circuit, date, and time.
15. Emergency exits through the protected area and vital area boundaries are locked, alarmed, and equipped with a mechanism to allow for emergency egress.	15. Test, inspection, or a combination of tests and inspections of the emergency exits through the protected area and vital area boundaries will be performed.	15. The emergency exits through the protected area and vital area boundaries are locked, alarmed, and equipped with a mechanism to allow for emergency egress.

Table 2.12-1 (9 of 9)

Design Commitment	Inspections, Tests, Analyses	Acceptance Criteria
16.a The central and secondary alarm stations have conventional (landline) telephone service with the main control room and local law enforcement authorities.	16.a Tests, inspections, or a combination of tests and inspections of the central and secondary alarm stations' conventional telephone services will be performed.	16.a The central and secondary alarm stations are equipped with conventional (landline) telephone service with the main control room and local law enforcement authorities.
16.b The central and secondary alarm stations are capable of continuous communication with security personnel.	16.b Tests, inspections, or a combination of tests and inspections of the central and secondary alarm stations' continuous communication capabilities will be performed.	16.b The central and secondary alarm stations are equipped with the capability to continuously communicate with security officers, watchmen, armed response individuals, or any security personnel that have responsibilities during a contingency event.
16.c Non-portable communication equipment in the central and secondary alarm stations remains operable from an independent power source in the event of loss of normal power.	16.c Tests, inspections, or a combination of tests and inspections of non-portable communication equipment will be performed.	16.c Non-portable communication devices (including conventional telephones systems) in the central and secondary alarm stations are wired to an independent power supply that enables the system to remain operable in the event of loss of normal power.

2.13 Design Reliability Assurance Program

2.13.1 Design Description

The purpose of the APR1400 design reliability assurance program (RAP) is to provide reasonable assurance that:

a. A plant is designed, constructed, and operated in a manner that is consistent with the risk insights and key assumptions (e.g., SSC design, reliability, and availability) from the probabilistic, deterministic, and other methods of analysis.

b. The RAP SSCs do not degrade to an unacceptable level of reliability, availability, or condition during plant operations.

c. The frequency of transients that challenge these SSCs is minimized.

d. These SSCs will function reliably when challenged.

The risk-significant SSCs including both safety-related and non-safety-related SSCs are identified for inclusion in the RAP through the expert panel.

1. For structures, systems, and components within the scope of the reliability assurance program (RAP SSCs), the design is consistent with risk insights and key assumptions.

2.13.2 Inspections, Tests, Analyses, and Acceptance Criteria

Table 2.13-1 describes the ITAAC for the design RAP.

Table 2.13-1

Design Reliability Assurance Program ITAAC

Design Commitment	Inspections, Tests, Analyses	Acceptance Criteria
1. For structures, systems, and components within the scope of the reliability assurance program (RAP SSCs), the design is consistent with risk insights and key assumptions.	1. An analysis will demonstrate that the initial design (for procurement and installation) of all RAP SSCs identified at the time of COL issuance is completed in accordance with the design RAP.	1. The initial design of all RAP SSCs identified at the time of the COL issuance has been subject to the applicable reliability assurance activities of the design RAP.

3.0 Interface Requirement

3.1 Electrical System

The offsite power system is site-specific. The offsite power system has interfaces with the onsite power system as follows:

a. The offsite power system is provided with a minimum of two independent offsite circuits from the transmission network to the onsite electrical distribution system.

b. The offsite transmission lines are designed to have the capacity and capability to power the required loads during steady state, transient, accident condition, and postulated events.

c. Independence is established between the onsite and offsite power systems physically and electrically.

d. The main transformer and the standby auxiliary transformers are connected to the switchyard.

e. The switchyard and its circuit breakers are sized to supply their load requirements and rated to interrupt fault currents.

f. Voltage variations of the transmission network do not cause voltage variations of more than acceptable tolerance of the normal voltage ratings of the loads.

g. The normal steady-state frequency of the offsite system is within acceptable tolerance of 60 Hz during recoverable periods of the offsite system instability.

h. The protocols are provided for the plant to remain cognizant of grid vulnerabilities.

i. Grounding and lightning protection systems are provided for the switchyard.

j. Alarms and displays are provided in order to monitor the switchyard.

3.2 Ultimate Heat Sink

The ultimate heat sink (UHS) is a safety-related and site-specific. The COL applicant is to provide the UHS design information based on the specific site characteristics including meteorological conditions. The COL applicant is to verify the following interface requirements:

a. The UHS provides the capability to reject the heat under normal and accident conditions (safe shutdown or post accident) assuming a single active failure concurrent with a loss of offsite power.

b. The UHS provides cooling capacity for at least 30 days without makeup water under worst case meteorological conditions in accordance with NRC RG 1.27.

c. The UHS provides the maximum supply temperature of 33.2 °C (91.8 °F) to the essential service water system.

d. The UHS design provides isolation between the UHS and the non-safety-related system.

e. The UHS provides the means to ensure the adequate NPSH of the ESW pumps under all operation modes if applicable to the site-specific design.

f. The UHS provides the means to prevent long-term fouling and mitigate short-term clogging anticipated at the site that may degrade system performance.

g. The UHS is designed to prevent water hammer if applicable to the site-specific design.

h. The UHS is designed to consider the evaluation of maximum evaporation and other losses if applicable to the site-specific design.

i. The components and piping, including supports, of the UHS are fabricated, installed and inspected in accordance with ASME Section III requirements if applicable to the site-specific design.

j. Pressure boundary welds in ASME Code components and piping of UHS meet ASME Section III requirements if applicable to the site-specific design.

k. The ASME Code components and piping of UHS maintain their pressure boundary integrity as its design pressure if applicable to the site-specific design.

l. The Seismic Category I structure, components, piping, including supports, and instruments of the UHS can withstand seismic design basis loads without loss of safety function if applicable to the site-specific design.

m. The Class 1E components and instruments can withstand the harsh environmental conditions during design basis accident without loss of safety function if applicable to the site-specific design.

n. Each of Class 1E components and instruments is powered from its respective Class 1E division, and separation is provided between Class 1E divisions, and between Class 1E divisions and non-Class 1E divisions if applicable to the site-specific design.

o. Alarms and indications for the UHS water temperature and level are provided in the MCR and RSR.

p. Controls required for the safety-related functions of the UHS are provided in the MCR and RSR if applicable to the site-specific design.

3.3 Essential Service Water System

Some of the Essential Service Water System (ESWS) are site-specific. The COL applicant is to provide the ESWS design information based on the specific site characteristics. The COL applicant is to verify the following interface requirements:

a. The ESWS piping outside the component cooling water heat exchanger building connected to the ultimate heat sink is designed and constructed in accordance with ASME Section III requirements.

b. The ESWS piping is designed and constructed to prevent the void formation in the pipe and minimize the water hammer.