TABLE OF CONTENTS

Section	Title	Page	
9.0	AUXILIARY SYSTEMS	9.1-1	
9.1	FUEL STORAGE AND HANDLING	9.1-1	
9.1.1	NEW FUEL STORAGE	9.1-1	
9.1.1.1	Design Bases	9.1-1	
9.1.1.2	Facilities Description	9.1-1	
9.1.1.3	Safety Evaluation	9.1-2	
9.1.2	SPENT FUEL POOL STORAGE	9.1-3	RN 13-018
9.1.2.1	Design Bases	9.1-3	
9.1.2.2	Facilities Description	9.1-4	
9.1.2.3	Safety Evaluation	9.1-4	
9.1.3	SPENT FUEL COOLING SYSTEM	9.1-4	
9.1.3.1	Design Bases	9.1-4	
9.1.3.2	System Description	9.1-6	
9.1.3.3	Safety Evaluation	9.1-7	
9.1.3.4	Inspection and Testing Requirements	9.1-9	
9.1.3.5	Instrumentation Requirements	9.1-10	
9.1.4	FUEL HANDLING SYSTEM	9.1-11	
9.1.4.1	Design Bases	9.1-11	
9.1.4.2	System Description	9.1-12	
9.1.4.3	Safety Evaluation	9.1-21	
9.1.4.4	Tests and Inspections	9.1-29	
9.1.5	SPENT FUEL DRY CASK STORAGE	9.1-30	RN 13-018 13-028
9.1.5.1	System Description	9.1-30	
9.1.5.2	Operations in the Fuel Handling Building	9.1-31	
9.1.6	REFERENCES	9.1-32	
9.2	WATER SYSTEMS	9.2-1	
9.2.1	SERVICE WATER SYSTEM	9.2-1	
9.2.1.1	Design Bases	9.2-1	
9.2.1.2	System Description	9.2-2	
9.2.1.3	Safety Evaluation	9.2-5	
9.2.1.4	Tests and Inspections	9.2-8	
9.2.1.5	Instrumentation Requirements	9.2-8	
9.2.2	COMPONENT COOLING WATER SYSTEM	9.2-11	
9.2.2.1	Design Bases	9.2-12	
9.2.2.2	System Description	9.2-14	
9.2.2.3	Safety Evaluation	9.2-19	
9.2.2.4	Tests and Inspections	9.2-22	
9.2.2.5	Instrumentation Requirements	9.2-22	
9.2.3	DEMINERALIZED WATER MAKEUP SYSTEM	9.2-24	
9.2.3.1	Design Bases	9.2-24	
9.2.3.2	System Description	9.2-25	
9.2.3.3	Safety Evaluation	9.2-26	
9.2.3.4	Testing and Inspection Requirements	9.2-26	
9.2.3.5	Instrumentation Requirements	9.2-26	
9.2.4	POTABLE AND SANITARY WATER SYSTEMS	9.2-26	
9.2.5	ULTIMATE HEAT SINK	9.2-26	
9.2.5.1	Design Bases	9.2-27	
9.2.5.2	System Description	9.2-27	
9.2.5.3	Safety Evaluation	9.2-27	
9.2.5.4	Testing and Inspection Requirements	9.2-31	

TABLE OF CONTENTS (Continued)

Section	Title	Page
9.2.5.5	Instrumentation Requirements	9.2-31
9.2.6	CONDENSATE STORAGE FACILITIES	9.2-31
9.2.6.1	Design Bases	9.2-31
9.2.6.2	System Description	9.2-32
9.2.6.3	Safety Evaluation	9.2-32
9.2.6.4	Tests and Inspections	9.2-33
9.2.6.5	Instrumentation Requirements	9.2-33
9.2.7	REACTOR MAKEUP WATER SUPPLY SYSTEM	9.2-33
9.2.7.1	Design Bases	9.2-33
9.2.7.2	System Description	9.2-34
9.2.7.3	Safety Evaluation	9.2-35
9.2.7.4	Inspection and Testing Requirements	9.2-36
9.2.7.5	Instrumentation Requirements	9.2-36
9.2.8	REFERENCES	9.2-37
9.3	PROCESS AUXILIARIES	9.3-1
9.3.1	COMPRESSED AIR SYSTEMS	9.3-1
9.3.1.1	Design Bases	9.3-1
9.3.1.2	System Description	9.3-2
9.3.1.3	Safety Evaluation	9.3-3
9.3.1.4	Testing and Inspection	9.3-4
9.3.1.5	Instrumentation Requirements	9.3-4
9.3.2	PROCESS SAMPLING SYSTEM	9.3-5
9.3.2.1	Design Bases	9.3-5
9.3.2.2	System Description	9.3-6
9.3.2.3	Safety Evaluation	9.3-9
9.3.2.4	Testing and Inspection Requirements	9.3-9
9.3.2.5	Instrumentation Requirements	9.3-9
9.3.3	EQUIPMENT AND FLOOR DRAINAGE SYSTEM	9.3-10
9.3.3.1	Design Bases	9.3-10
9.3.3.2	System Description	9.3-10
9.3.3.3	Safety Evaluation	9.3-14
9.3.3.4	Testing and Inspection Requirements	9.3-15
9.3.3.5	Instrumentation Requirements	9.3-15
9.3.4	CHEMICAL AND VOLUME CONTROL SYSTEM	9.3-15
9.3.4.1	Design Bases	9.3-16
9.3.4.2	System Description	9.3-17
9.3.4.3	Safety Evaluation	9.3-42
9.3.4.4	Tests and Inspections	9.3-44
9.3.4.5	Instrumentation Application	9.3-44
9.3.5	FAILED FUEL DETECTION SYSTEM	9.3-45
9.3.6	BORON RECYCLE SYSTEM	9.3-46
9.3.6.1	Design Bases	9.3-46
9.3.6.2	System Description	9.3-47
9.3.6.3	Safety Evaluation	9.3-52
9.3.6.4	Tests and Inspections	9.3-52
9.3.6.5	Instrumentation Application	9.3-52
9.3.7	REFERENCES	9.3-54

TABLE OF CONTENTS (Continued)

Section	Title	Page
9.4	AIR CONDITIONING, HEATING, COOLING, AND VENTILATION SYSTEMS	9.4-1
9.4.1	CONTROL BUILDING AREA VENTILATION SYSTEM	9.4-1
9.4.1.1	Design Bases	9.4-1
9.4.1.2	System Description	9.4-1
9.4.1.3	Safety Evaluation	9.4-13
9.4.1.4	Inspection and Testing Requirements	9.4-14
9.4.2	AUXILIARY AND RADWASTE AREA VENTILATION SYSTEM	9.4-15
9.4.2.1	Design Bases	9.4-16
9.4.2.2	System Description	9.4-16
9.4.2.3	Safety Evaluation	9.4-28
9.4.2.4	Inspection and Testing Requirements	9.4-29
9.4.3	FUEL HANDLING BUILDING VENTILATION	9.4-31
9.4.3.1	Design Bases	9.4-31
9.4.3.2	System Description	9.4-32
9.4.3.3	Safety Evaluation	9.4-34
9.4.3.4	Inspection and Testing Requirements	9.4-35
9.4.4	TURBINE BUILDING	9.4-36
9.4.4.1	Design Bases	9.4-36
9.4.4.2	System Description	9.4-36
9.4.4.3	Safety Evaluation	9.4-38
9.4.4.4	Inspection and Testing Requirements	9.4-38
9.4.5	ENGINEERED SAFETY FEATURES VENTILATION SYSTEM	9.4-38
9.4.6	INTERMEDIATE BUILDING VENTILATION SYSTEMS	9.4-39
9.4.6.1	Design Bases	9.4-39
9.4.6.2	System Description	9.4-39
9.4.6.3	Safety Evaluation	9.4-46
9.4.6.4	Inspection and Testing Requirements	9.4-46
9.4.7	MISCELLANEOUS BUILDING VENTILATION AND COOLING SYSTEMS	9.4-48
9.4.7.1	Design Bases	9.4-48
9.4.7.2	System Description	9.4-48
9.4.7.3	Safety Evaluation	9.4-65
9.4.7.4	Inspection and Testing Requirements	9.4-65
9.4.8	REACTOR BUILDING COOLING AND FILTERING SYSTEMS	9.4-66
9.4.8.1	Design Bases	9.4-66
9.4.8.2	System Description	9.4-67
9.4.8.3	Safety Evaluation	9.4-77
9.4.8.4	Inspection and Testing Requirements	9.4-79
9.4.9	REFERENCES	9.4-80
9.5	OTHER AUXILIARY SYSTEMS	9.5-1
9.5.1	FIRE PROTECTION	9.5-1
9.5.1.1	Design Basis Summary	9.5-2
9.5.1.2	System Description	9.5-4
9.5.1.3	Safety Evaluation	9.5-5
9.5.1.4	Fire Protection Program Documentation Configuration Control and Quality Assurance	9.5-6

RN 12-020

TABLE OF CONTENTS (Continued)

Section	Title	Page	
9.5.2	COMMUNICATION SYSTEMS	9.5-7	
9.5.2.1	Design Bases	9.5-7	
9.5.2.2	Description	9.5-7	
9.5.2.3	Inspection and Testing Requirements	9.5-10	
9.5.3	LIGHTING SYSTEMS	9.5-11	
9.5.3.1	Normal Lighting	9.5-11	
9.5.3.2	Essential Lighting	9.5-11	
9.5.3.3	Emergency Lighting	9.5-11	
9.5.3.4	Tests and Inspection	9.5-12	
9.5.4	DIESEL GENERATOR FUEL OIL STORAGE AND TRANSFER SYSTEM	9.5-12	
9.5.4.1	Design Bases	9.5-12	
9.5.4.2	System Description	9.5-13	
9.5.4.3	Safety Evaluation	9.5-14	
9.5.4.4	Test and Inspection Requirements	9.5-14	
9.5.4.5	Instrumentation Application	9.5-15	
9.5.5	DIESEL GENERATOR COOLING WATER SYSTEM	9.5-15	
9.5.5.1	Design Bases	9.5-15	RN 12-020
9.5.5.2	System Description	9.5-16	
9.5.5.3	Safety Evaluation	9.5-17	
9.5.5.4	Tests and Inspections	9.5-17	
9.5.5.5	Instrumentation Application	9.5-17	
9.5.6	DIESEL GENERATOR STARTING SYSTEM	9.5-18	
9.5.6.1	Design Bases	9.5-18	
9.5.6.2	System Description	9.5-18	
9.5.6.3	Safety Evaluation	9.5-19	
9.5.6.4	Tests and Inspections	9.5-19	
9.5.6.5	Instrumentation Application	9.5-19	
9.5.7	DIESEL GENERATOR LUBRICATION SYSTEM	9.5-20	
9.5.7.1	Design Bases	9.5-20	
9.5.7.2	System Description	9.5-20	
9.5.7.3	Safety Evaluation	9.5-21	
9.5.7.4	Tests and Inspections	9.5-22	
9.5.7.5	Instrumentation Application	9.5-22	
9.5.8	DIESEL GENERATOR COMBUSTION AIR INTAKE AND EXHAUST SYSTEM	9.5-22	
9.5.8.1	Design Bases	9.5-22	
9.5.8.2	System Description	9.5-23	
9.5.8.3	Safety Evaluation	9.5-24	
9.5.8.4	Inspection and Testing Requirements	9.5-24	
9.5.9	REFERENCES	9.5-25	

LIST OF TABLES

Table	Title	Page	
9.1-1	Spent Fuel Cooling System Component Data	9.1-33	
9.1-2	Spent Fuel Storage Racks - Design Data	9.1-35	
9.1-3	Spent Fuel Storage Racks - Module Data	9.1-36	
9.2-1	Major Service Water System Components	9.2-38	
9.2-2	Service Water System Failure Analysis	9.2-40	
9.2-3	CCWS Cooling Water Supply and Heat Removal Requirements Plant Startup to Hot Critical Minimum Load	9.2-41	
9.2-4	CCWS Cooling Water Supply and Heat Removal Requirements Normal Plant Operation	9.2-44	
9.2-5	CCWS Cooling Water Supply and Heat Removal Requirements Normal Plant Shutdown at 4 Hours	9.2-47	
9.2-6	CCWS Cooling Water Supply and Heat Removal Requirements Normal Power Shutdown at 24 Hours	9.2-50	
9.2-7	CCWS Cooling Water Supply and Heat Removal Requirements Refueling	9.2-53	
9.2-8	CCWS Cooling Water Supply and Heat Removal Requirements Safety Injection	9.2-56	
9.2-9	CCWS Cooling Water Supply and Heat Removal Requirements Recirculation	9.2-59	
9.2-10	CCWS Cooling Water Supply and Heat Removal Requirements Hot Standby, Loss of Offsite Power	9.2-62	
9.2-11	Component Cooling Water System Single Failure Analysis	9.2-65	
9.2-12	Major Component Cooling Water System Components	9.2-66	
9.2-13	Deleted RN 01-098		
9.2-14	Deleted RN 01-098		
9.2-15	Service Water Pond Thermal Performance Studies Maximum Service Water Intake and Discharge Temperature	9.2-68	
9.2-16	Condensate Storage Tank Data	9.2-69	
9.2-17	Reactor Makeup Water System Component Data	9.2-70	
9.3-1	Major Compressed Air System Components	9.3-55	
9.3-2	Nuclear Sampling System Sample Points	9.3-57	02-01
9.3-3	Nuclear Sampling System Major Components	9.3-58	
9.3-4	Chemical and Volume Control System Design Parameters	9.3-59	
9.3-5	Principal Component Data Summary Chemical and Volume Control System	9.3-60	
9.3-6	Principal Component Data Summary Boron Recycle System	9.3-68	

LIST OF TABLES (Continued)

Table	Title	Page	
9.4-1	Deleted by Amendment 99-01 (RN 98-064)	-	
9.4-2	Deleted by Amendment 99-01 (RN 98-064)	-	
9.4-3	Deleted by Amendment 99-01 (RN 98-064)	-	
9.4-4	Deleted by Amendment 99-01 (RN 98-064)	-	
9.4-5	Deleted by Amendment 99-01 (RN 98-064)	-	
9.4-6	Deleted by Amendment 99-01 (RN 98-064)	-	
9.5-1	Power Block Structures	9.5-26	RN 12-020
9.5-2	Single Failure Analysis Diesel Generator Fuel Oil System	9.5-27	
9.5-3	Diesel Generator Cooling Water System Heat Transfer and Flow Rate (Major Components)	9.5-28	

LIST OF FIGURES

Figure	Title	
9.1-1	New Fuel Storage Rack Assembly	
9.1-2	Spent Fuel Storage Racks - Module Layout	RN 03-017
9.1-2a	High Density Spent Fuel Storage Rack - Schematic View Region 1 Rack Structure	
9.1-2b	High Density Spent Fuel Storage Rack - Region 1 Storage Cell Assemblage	
9.1-2c	High Density Spent Fuel Storage Rack - Schematic View Region 2 Rack Structure	
9.1-2d	High Density Spent Fuel Storage Rack - Region 2 Storage Cell Assemblage	
9.1-3	Spent Fuel Cooling	
9.1-4	Refueling Machine	
9.1-5	Fuel Handling Machine	
9.1-6	New Fuel Elevator	
9.1-7	Fuel Transfer System	
9.1-8	Rod Cluster Control Changing Fixture	
9.1-9	Spent Fuel Handling Tool	
9.1-10	New Fuel Handling Tool	
9.1-11	Upper Core Barrel Handling Fixture	
9.1-12	Deleted RN 08-030 May 2009	
9.2-1	Service Water Cooling	
9.2-2	Service Water Cooling (4 Sheets)	RN 09-002
9.2-3	Deleted by Amendment 95-04	
9.2-4	Component Cooling	
9.2-5	Component Cooling System Inside Reactor Building	
9.2-6	Component Cooling System Nonessential Equipment Cooling	
9.2-7	Component Cooling System to NSSS Pumps	
9.2-8	Water Treatment System	
9.2-9	Demineralized Water	
9.2-9a	Filtered Water	
9.2-9b	Demineralized Water	RN 17-034
9.2-9c	Domestic Water System	
9.2-10	Heat Rejection to Service Water Pond Under LOCA Conditions	
9.2-11	Heat Rejection to Service Water Pond Under Normal Shutdown Conditions	
9.2-12	Deleted RN 01-098	
9.2-13	Deleted RN 01-098	
9.2-14	Deleted RN 01-098	
9.2-15	Deleted RN 01-098	

LIST OF FIGURES (Continued)

Figure	Title	
9.2-16	Service Water Intake and Discharge Temperatures During LOCA Shutdown with Full Pond Area	
9.2-17	Deleted RN 01-098	
9.2-18	Deleted RN 01-098	
9.2-19	Deleted RN 01-098	
9.2-20	Deleted RN 01-098	
9.2-21	Deleted RN 01-098	
9.2-22	Vertical Temperature Distribution During LOCA	
9.2-23	Deleted RN 01-098	
9.2-24	Reactor Makeup Water System	
9.3-1	Station Service Air	
9.3-2	Instrument Air	
9.3-3	Reactor Building Instrument Air Services	
9.3-3a	Instrument Air Backup	
9.3-4	Nuclear Sampling	
9.3-5	Station Drainage Flow Diagram - Reactor Building	
9.3-6	Station Drainage Flow Diagram - Auxiliary Building Elevations 485’-0” to 425’-6”	
9.3-7	Station Drainage Flow Diagram - Auxiliary Building Elevations 412’-0” to 374’-0”	
9.3-8	Station Drainage Flow Diagram - Turbine Building	
9.3-9	Station Drainage Flow Diagram - Control Building	
9.3-10	Station Drainage Flow Diagram - Intermediate Building	
9.3-11	Station Drainage Flow Diagram - Fuel Handling Building	
9.3-12	Reactor and Auxiliary Building Sump Pumps	
9.3-13	Nuclear Drains to Waste Holdup Tank	
9.3-13a	Nuclear Valve Leakoff Drains to Recycle Holdup Tank	
9.3-14	Non-Nuclear Plant Drains	RN 17-023
9.3-15	Plant Industrial and Sanitary Waste	
9.3-16	Chemical and Volume Control System - Flow Diagram (7 Sheets)	
9.3-17	Deleted	

LIST OF FIGURES (Continued)

Figure	Title	
9.3-18	Boron Recycle System Flow Diagram	
9.3-19	Deleted	
9.3-20	Normal and Post-Accident Sampling	
9.3-21	Deleted RN 00-070	
9.4-1	Control Room Normal and Emergency Air Handling Systems	
9.4-2	Relay and Computer Room Cooling System	
9.4-3	Controlled Access Supply Cooling System	
9.4-4	Control Building Controlled Access Exhaust	
9.4-5	Computer Rooms and SAS Room Cooling Unit	99-01
9.4-6	Auxiliary Building Main Supply System	
9.4-7	Auxiliary Building HEPA Exhaust System	
9.4-8	Auxiliary Building Charcoal Exhaust System	
9.4-9	Auxiliary Building Main Exhaust System	
9.4-10	Auxiliary Building Pump Room Cooling System	
9.4-10a	Hot Machine Shop Ventilation System	
9.4-11	Fuel Handling Building Charcoal Exhaust System and Air Supply Distribution	
9.4-12	Turbine Building Ventilation System	
9.4-13	Turbine Building Switchgear Room Cooling System	
9.4-14	CRDM Switchgear Room Cooling System and Water Chiller Area Ventilation System	
9.4-15	Intermediate Building ESF Switchgear Rooms Cooling System	
9.4-16	Battery Room and Charging Room, BOP Charger Area Ventilation System	
9.4-17	Intermediate Building General Ventilation and Pump Area Cooling System	
9.4-18	Diesel Generator Areas Vent System	
9.4-19	Service Water Intake Screen and Pumphouse Building Ventilation System	
9.4-20	Service Building First Floor and Second Floor	
9.4-21	Service Building Second Floor	
9.4-22	Chilled Water Pump and Chiller Area	
9.4-23	Chilled Water to Cooling Coils “A”	
9.4-24	Chilled Water to Cooling Coils “B”	
9.4-25	Industrial Cooling Water (2 Sheets)	RN 14-042 17-010
9.4-26	Substation Relay House Floor Elevation 436’-6”	
9.4-26a	East and West Penetration Area Cooling System	
9.4-26b	Miscellaneous Pump Room Systems and Lube Oil Room System	
9.4-26c	Water Treating Area Laboratory Heating and Cooling System	
9.4-26d	Unit 1 Relay House HVAC	RN 12-001

LIST OF FIGURES (Continued)

Figure	Title	
9.4-27	Deleted	
9.4-28	Reactor Building Purge Supply and Purge Exhaust Systems	
9.4-29	Reactor Building Charcoal Cleanup, Secondary Compartment Cooling and Reactor Compartment Cooling	02-01
9.4-30	Reactor Building Refueling Water Surface System	
9.4-31	Reactor Building CRDM Shroud Vent System	RN 16-003
9.4-32	CRDM Cooling Water	
9.4-33	Chilled Water - Turbine Building Switchgear Rooms	99-01
9.4-34	Non Nuclear Safety Chilled Water System	
9.4-35, SH. 1	EB HVAC – Electrical and Battery Room	RN 13-029
9.4-35, SH. 2	EB HVAC – Diesel Generator 1 Room	
9.4-36	AEB HVAC – Diesel Generator 2 Room	
9.5-1	Fire Service (5 Sheets)	RN 10-001 15-006 18-005
9.5-1a	Auxiliary, Reactor, and Fuel Handling Buildings - Plan Above Basement Floor Elevation 412’-0”	
9.5-1b	Auxiliary, Reactor, and Fuel Handling Buildings - Plan Above Mezzanine Floor Elevation 436’-0”	
9.5-1c	Auxiliary, Reactor, and Fuel Handling Buildings - Plan Above Operating Floor Elevation 463’-0”	
9.5-1d	Intermediate Building and Diesel Generator Building - Plan Above Mezzanine Floor Elevation 436’-0”	02-01
9.5-1e	Intermediate Building and Diesel Generator Building Plan Above Elevation 463’-0”	
9.5-1f	Control Complex Plan at Elevations 412’-0”, 436’-0", 463’-0” and 482’-0”	02-01
9.5-1g	Control Building Cable Spreading Floor	
9.5-1h	Turbine Building Basement Floor Plan Above Elevation 412’-0”	
9.5-2	Diesel Generator - Fuel Oil	
9.5-2a	Buried Diesel Generator Fuel Oil Storage Tanks Location	02-01
9.5-3	Intercooler Water System	
9.5-4	Jacket Water System	
9.5-5	Cooling Water Flow Through Engine	
9.5-6	Starting Air System	
9.5-7	Lubricating Oil System	
9.5-8	Engine Lubricating System Showing Flow Through Crankshaft, Bearings, Connecting Rod, and Piston	
9.5-9	Lubrication System for Valve Rockers	
9.5-10	Combustion Air Intake Labyrinth and Exhaust Piping Details	
9.5-11	Diesel Generator Miscellaneous Services	

LIST OF EFFECTIVE PAGES (LEP)

The following list delineates pages to Chapter 9 of the Virgil C. Summer Nuclear Station Final Safety Analysis Report which are current through April 2018. The latest changes to pages and figures are indicated below by Revision Number (RN) in the Amendment column along with the Revision Number and date for each page and figure included in the Final Safety Analysis Report.

Page / Fig. No.		Amend. No.	Date
Page	9-i	RN13-018	November 2017
		Reset	April 2018
	9-ii	Reset	April 2018
	9-iii	Reset	April 2018
	9-iv	Reset	April 2018
	9-v	Reset	April 2018
	9-vi	Reset	April 2018
	9-vii	Reset	April 2018
	9-viii	Reset	April 2018
	9-ix	Reset	April 2018
	9-x	RN13-029	November 2017
		Reset	April 2018
	9-xi	Reset	April 2018
	9-xii	Reset	April 2018
	9-xiii	Reset	April 2018
	9-xiv	Reset	April 2018
	9-xv	Reset	April 2018
	9-xvi	Reset	April 2018
Page	9.1-1	RN14-006	March 2014
	9.1-2	RN13-028	March 2014
	9.1-3	RN13-018	November 2015
	9.1-4	RN03-017	December 2003
	9.1-5	RN03-017	December 2003
	9.1-6	RN03-017	December 2003
	9.1-7	00-01	December 2000
		RN15-007	May 2016
	9.1-8	RN05-010	April 2005
	9.1-9	RN05-010	April 2005
	9.1-10	00-01	December 2000
	9.1-11	02-01	May 2002
	9.1-12	RN13-018	November 2015
	9.1-13	RN13-018	November 2015
	9.1-14	02-01	May 2002
	9.1-15	02-01	May 2002
	9.1-16	02-01	May 2002
	9.1-17	RN04-024	March 2005
	9.1-18	RN04-024	March 2005
	9.1-19	RN08-030	May 2009
		RN15-021	May 2016
		RN16-003	February 2018
	9.1-20	RN11-041	April 2015
		RN15-021	May 2016
Page	9.1-21	00-01	December 2000
	9.1-22	00-01	December 2000
	9.1-23	00-01	December 2000
	9.1-24	02-01	May 2002
	9.1-25	00-01	December 2000
	9.1-26	00-01	December 2000
	9.1-27	RN11-041	April 2015
	9.1-28	RN03-017	December 2003
	9.1-29	RN03-017	December 2003
	9.1-30	RN13-018	November 2015
	9.1-31	RN13-018	November 2015
	9.1-32	RN13-018	November 2015
	9.1-33	RN03-017	December 2003
	9.1-34	02-01	May 2002
	9.1-35	RN03-017	December 2003
	9.1-36	RN03-017	December 2003
Fig.	9.1-1	2	August 1986
	9.1-2	RN03-017	December 2003
	9.1-2a	RN03-017	December 2003
	9.1-2b	RN03-017	December 2003
	9.1-2c	RN03-017	December 2003
	9.1-2d	RN03-017	December 2003
	9.1-3	RN11-009	November 2011
		RN12-021	April 2013
		RN14-020	March 2016
		RN14-022	May 2016
		RN15-007	May 2016
	9.1-4	98-01	April 1998
	9.1-5	0	August 1984
	9.1-6	0	August 1984
	9.1-7	00-01	December 2000
	9.1-8	0	August 1984
	9.1-9	0	August 1984
	9.1-10	0	August 1984
	9.1-11	0	August 1984
	9.1-12	Deleted	RN08-030
Page	9.2-1	RN04-039	December 2005
	9.2-2	RN09-002	January 2010

Page / Fig. No.		Amend. No.	Date
Page	9.2-3	RN04-039	December 2005
		RN12-030	November 2017
	9.2-4	RN08-008	September 2008
	9.2-5	RN03-049	March 2004
	9.2-6	02-01	May 2002
	9.2-7	RN01-074	June 2002
	9.2-8	RN15-028	January 2016
	9.2-9	00-01	December 2000
	9.2-10	RN14-033	December 2014
	9.2-11	RN14-033	December 2014
	9.2-12	00-01	December 2000
	9.2-13	02-01	May 2002
	9.2-14	00-01	December 2000
	9.2-15	00-01	December 2000
	9.2-16	00-01	December 2000
	9.2-17	02-01	May 2002
	9.2-18	00-01	December 2000
	9.2-19	00-01	December 2000
	9.2-20	02-01	May 2002
	9.2-21	02-01	May 2002
	9.2-22	00-01	December 2000
	9.2-23	00-01	December 2000
	9.2-24	02-01	May 2002
	9.2-25	RN05-025	January 2006
	9.2-26	00-01	December 2000
	9.2-27	02-01	May 2002
	9.2-28	02-01	May 2002
	9.2-29	02-01	May 2002
	9.2-30	02-01	May 2002
	9.2-31	00-01	December 2000
	9.2-32	00-01	May 2002
	9.2-33	RN09-004	March 2009
	9.2-34	RN05-025	January 2006
	9.2-35	00-01	May 2002
	9.2-36	RN04-012	July 2004
		RN17-003	August 2017
	9.2-37	02-01	May 2002
	9.2-38	00-01	December 2000
	9.2-39	00-01	May 2002
	9.2-40	02-01	May 2002
	9.2-41	RN03-017	December 2003
Page	9.2-42	00-01	December 2000
	9.2-43	RN03-017	December 2003
	9.2-44	00-01	December 2000
	9.2-45	00-01	December 2000
	9.2-46	RN03-017	December 2003
	9.2-47	00-01	December 2000
	9.2-48	00-01	December 2000
	9.2-49	RN03-017	December 2003
	9.2-50	00-01	December 2000
	9.2-51	00-01	December 2000
	9.2-52	RN03-017	December 2003
	9.2-53	RN03-017	December 2003
	9.2-54	00-01	December 2000
	9.2-55	RN03-017	December 2003
	9.2-56	00-01	December 2000
	9.2-57	00-01	December 2000
	9.2-58	RN03-017	December 2003
	9.2-59	00-01	December 2000
	9.2-60	00-01	December 2000
	9.2-61	RN03-017	December 2003
	9.2-62	00-01	December 2000
	9.2-63	00-01	December 2000
	9.2-64	RN03-017	December 2003
	9.2-65	02-01	May 2002
	9.2-66	00-01	December 2000
	9.2-67	02-01	May 2002
	9.2-68	02-01	May 2002
	9.2-69	02-01	May 2002
	9.2-70	02-01	May 2002
Fig.	9.2-1	RN12-014	November 2012
		RN15-020	July 2017
	9.2-2 SH.1	RN10-012	May 2013
		RN17-006	September 2017
		RN12-030	November 2017
	9.2-2 SH.2	RN09-002	January 2010
		RN14-020	March 2016
	9.2-2 SH.3	RN10-012	May 2013
	9.2-2 SH.4	RN09-002	January 2010
		RN14-020	March 2016
	9.2-3	95-04	(Deleted)

Page / Fig. No.		Amend. No.	Date
	9.2-4	RN12-014	November 2012
Fig.	9.2-5	RN10-021 RN17-014	August 2012 September 2017
	9.2-6	RN09-006	May 2009
	9.2-7	RN09-016	September 2009
	9.2-8	RN10-031	July 2012
	9.2-9	RN08-027	November 2008
	9.2-9A	RN07-013	July 2007
	9.2-9B	RN15-028 RN17-034	January 2016 March 2018
	9.2-9C	RN07-029 RN07-013	November 2007 July 2007
	9.2-10	02-01	May 2002
	9.2-11	02-01	May 2002
	9.2-12	02-01	Deleted
	9.2-13	02-01	Deleted
	9.2-14	02-01	Deleted
	9.2-15	02-01	Deleted
	9.2-16	02-01	May 2002
	9.2-17	02-01	Deleted
	9.2-18	02-01	Deleted
	9.2-19	02-01	Deleted
	9.2-20	02-01	Deleted
	9.2-21	02-01	Deleted
	9.2-22	02-01	May 2002
	9.2-23	02-01	Deleted
	9.2-24	RN08-021	February 2010
Page	9.3-1	RN15-017	August 2015
	9.3-2	RN13-004	November 2013
	9.3-3	RN15-017	August 2015
	9.3-4	RN10-014	November 2011
	9.3-5	RN12-018	May 2013
	9.3-6	RN05-025	January 2006
	9.3-7	RN05-025	January 2006
	9.3-8	RN05-025	January 2006
	9.3-9	00-01	December 2000
	9.3-10	02-01 RN17-011	May 2002 July 2017
	9.3-11	02-01	May 2002

Page / Fig. No.		Amend. No.	Date
	9.3-12	02-01	May 2002
	9.3-13	02-01	May 2002
	9.3-14	RN08-017	December 2008
	9.3-15	00-01	December 2000
Page	9.3-16	00-01	December 2000
	9.3-17	RN11-027	May 2013
	9.3-18	00-01	December 2000
	9.3-19	RN11-027 RN16-018	May 2013 October 2016
	9.3-20	00-01	December 2000
	9.3-21	00-01	December 2000
	9.3-22	00-01	December 2000
	9.3-23	00-01	December 2000
	9.3-24	00-01	December 2000
	9.3-25	00-01	December 2000
	9.3-26	RN04-005	August 2007
	9.3-27	00-01	December 2000
	9.3-28	00-01	December 2000
	9.3-29	00-01	December 2000
	9.3-30	00-01	December 2000
	9.3-31	00-01	December 2000
	9.3-32	02-01	May 2002
	9.3-33	00-01	December 2000
	9.3-34	00-01	December 2000
	9.3-35	RN04-005	August 2007
	9.3-36	00-01	December 2000
	9.3-37	00-01	December 2000
	9.3-38	00-01	December 2000
	9.3-39	00-01	December 2000
	9.3-40	00-01	December 2000
	9.3-41	00-01	December 2000
	9.3-42	RN00-073	September 2003
	9.3-43	00-01	December 2000
	9.3-44	00-01	December 2000
	9.3-45	00-01	December 2000
	9.3-46	RN07-037	November 2011
	9.3-47	RN07-037	November 2011

Page / Fig. No.		Amend. No.	Date
	9.3-48	RN07-037	November 2011
	9.3-49	RN07-037	November 2011
	9.3-50	RN07-037	November 2011
	9.3-51	RN07-037	November 2011
Page	9.3-52	RN07-037	November 2011
	9.3-53	RN07-037	November 2011
	9.3-54	RN07-037	November 2011
	9.3-55	RN10-014	November 2011
	9.3-56	RN12-018	May 2013
	9.3-57	02-01	May 2002
	9.3-58	02-01	May 2002
	9.3-59	RN11-027	May 2013
	9.3-60	RN11-027	May 2013
	9.3-61	02-01	May 2002
	9.3-62	02-01	May 2002
	9.3-63	02-01	May 2002
	9.3-64	02-01	May 2002
	9.3-65	02-01	May 2002
	9.3-66	RN98-128	February 1999
	9.3-67	02-01	May 2002
	9.3-68	RN07-037	November 2011
	9.3-69	RN07-037	November 2011
	9.3-70	02-01	May 2002
Fig.	9.3-1	RN10-018	November 2011
	9.3-2	RN12-018	May 2013
	9.3-3	RN10-025	November 2011
	9.3-3A	RN04-004	May 2005
	9.3-4	RN06-018	August 2006
	9.3-5	RN10-017	November 2011
		RN11-019	November 2011
		RN12-014	November 2012
		RN17-014	September 2017
	9.3-6	00-01	December 2000
	9.3-7	00-01	December 2000
	9.3-8	RN10-014	November 2011
		RN10-018	November 2011
		RN11-015	November 2011
	9.3-9	RN02-056	February 2004

Page / Fig. No.		Amend. No.	Date
	9.3-10	RN11-018	July 2012
		RN12-014	November 2012
		RN16-027	August 2017
	9.3-11	RN08-032	December 2008
	9.3-12	RN05-041	October 2005
	9.3-13	RN05-041	October 2005
	9.3-13A	RN05-041	October 2005
	9.3-14	RN10-004	May 2010
		RN17-023	April 2018
	9.3-15	RN09-007	November 2011
		RN07-034	August 2012
	9.3-16(1a)	RN07-003	June 2010
		RN16-012	October 2016
	9.3-16(1b)	RN07-003	June 2010
		RN16-012	October 2016
	9.3-16(1c)	RN15-028	January 2016
		RN16-012	October 2016
		RN17-014	September 2017
	9.3-16 (2)	RN04-013	November 2006
	9.3-16 (3)	RN11-027	May 2013
		RN14-022	May 2016
	9.3-16 (4)	RN04-013	November 2006
		RN17-016	November 2017
	9.3-16 (5)	RN03-040	August 2004
		RN14-022	May 2016
	9.3-17	Deleted	
	9.3-18	RN11-009	November 2011
	9.3-19	Deleted	
	9.3-20	RN05-041	October 2005
	9.3-21	RN00-070	Deleted
Page	9.4-1	RN10-014	November 2011
	9.4-2	00-01	December 2000
	9.4-3	00-01	December 2000
	9.4-4	RN99-053	September 1999
	9.4-5	RN99-053	September 1999
	9.4-6	00-01	December 2000
	9.4-7	RN99-053	September 1999
	9.4-8	00-01	December 2000
	9.4-9	00-01	December 2000
	9.4-10	00-01	December 2000
	9.4-11	RN99-053	September 1999

Page / Fig. No.	Amend. No.	Date
9.4-12	00-01	December 2000
9.4-13	00-01	December 2000
9.4-14	RN01-081	May 2003
9.4-15	00-01	December 2000
9.4-16	02-01	May 2002
9.4-17	00-01	December 2000
9.4-18	00-01	December 2000
9.4-19	00-01	December 2000
Page 9.4-20	00-01	December 2000
9.4-21	00-01	December 2000
9.4-22	00-01	December 2000
9.4-23	RN99-053	September 1999
9.4-24	02-01	May 2002
9.4-25	00-01	December 2000
9.4-26	RN99-053	September 1999
9.4-27	00-01	December 2000
9.4-28	00-01	December 2000
9.4-29	00-01	December 2000
9.4-30	00-01	December 2000
9.4-31	00-01	December 2000
9.4-32	00-01	December 2000
9.4-33	00-01	December 2000
9.4-34	00-01	December 2000
9.4-35	RN12-034	July 2014
9.4-36	00-01	December 2000
9.4-37	00-01	December 2000
9.4-38	00-01	December 2000
9.4-39	00-01 RN17-011	December 2000 July 2017
9.4-40	00-01	December 2000
9.4-41	RN99-053	September 1999
9.4-42	RN99-053	September 1999
9.4-43	00-01	December 2000
9.4-44	RN99-053	September 1999
9.4-45	00-01	December 2000
9.4-46	00-01	December 2000
9.4-47	00-01	December 2000

Page / Fig. No.	Amend. No.	Date
9.4-48	00-01	December 2000
9.4-49	RN12-001 RN13-029	February 2015 March 2016
9.4-50	00-01	December 2000
9.4-51	00-01	December 2000
9.4-52	RN11-018 RN11-016	July 2012 May 2013
9.4-53	00-01	December 2000
9.4-54	RN11-018 RN16-025 RN17-010	July 2012 April 2017 April 2018
Page 9.4-55	00-01 RN16-025 RN17-010	December 2000 April 2017 April 2018
9.4-56	RN12-001 RN16-025 RN17-010	February 2015 April 2017 April 2018
9.4-57	00-01	December 2000
9.4-58	00-01	December 2000
9.4-59	00-01	December 2000
9.4-60	00-01	December 2000
9.4-61	00-01 RN16-015	December 2000 October 2016
9.4-62	02-01	May 2002
9.4-63	RN12-001 RN13-029	February 2015 March 2016
9.4-64	00-01 RN13-029	December 2000 March 2016
9.4-65	00-01	December 2000
9.4-66	00-01	December 2000
9.4-67	00-01	December 2000
9.4-68	00-01	December 2000
9.4-69	00-01	December 2000
9.4-70	RN13-016	June 2013
9.4-71	RN13-016	June 2013
9.4-72	RN13-016	June 2013
9.4-73	00-01	December 2000
9.4-74	RN13-016	June 2013
9.4-75	00-01	December 2000
9.4-76	00-01 RN16-003	December 2000 February 2018

Page / Fig. No.	Amend. No.	Date
9.4-77	00-01	December 2000
9.4-78	RN12-034	July 2014
Fig. 9.4-1	RN02-012	May 2002
9.4-2	02-01	May 2002
9.4-3	RN04-029 RN15-018	October 2006 January 2017
9.4-4	RN02-042	June 2003
9.4-5	02-01	May 2002
9.4-6	RN06-003	August 2006
9.4-7	RN02-042	June 2003
9.4-8	RN02-042	June 2003
9.4-9	RN02-042	June 2003
Fig. 9.4-10	02-01	May 2002
9.4-10a	RN02-042	June 2003
9.4-11	RN02-042	June 2003
9.4-12	RN14-017	January 2015
9.4-13	00-01	December 2000
9.4-14	02-01 RN17-011	May 2002 July 2017
9.4-15	02-01	May 2002
9.4-16	02-01	May 2002
9.4-17	02-01 RN16-030	May 2002 March 2017
9.4-18	RN01-108	March 2003
9.4-19	02-01	May 2002
9.4-20	RN11-016	May 2013
9.4-21	RN10-028	May 2013
9.4-22	RN11-018 RN12-014 RN17-006	July 2012 November 2012 September 2017
9.4-23	RN08-019	October 2008
9.4-24	RN08-019	October 2008
9.4-25 (Sh 1)	RN11-026 RN12-014 RN14-042 RN17-010	November 2011 November 2012 March 2016 April 2018
9.4-25 (Sh 2)	RN14-042 RN16-025 RN17-010	March 2016 April 2017 April 2018
9.4-26	RN11-003	January 2015
9.4-26a	RN02-042	June 2003
9.4-26b	02-01	May 2002
9.4-26c	00-01	December 2000
9.4-26d	RN12-001	February 2015
9.4-27	Deleted	
9.4-28	02-01	May 2002
9.4-29	RN09-023	June 2010
9.4-30	02-01	May 2002
9.4-31	RN09-023 RN16-003	June 2010 February 2018
9.4-32	RN15-017	August 2015
9.4-33	RN02-012	May 2002
9.4-34	99-01	June 1999
9.4-35 (Sh 1)	RN13-029	March 2016
9.4-35 (Sh 2)	RN13-029	March 2016
9.4-36	RN13-029	March 2016
Page 9.5-1	RN03-053 RN12-020	January 2004 March 2016
9.5-2	RN03-053 RN12-020	January 2004 March 2016
9.5-3	00-01 RN12-020	December 2000 March 2016
9.5-4	RN12-043 RN12-020	November 2014 March 2016
9.5-5	RN11-016 RN12-020	May 2013 March 2016
9.5-6	RN03-018 RN12-020	June 2003 March 2016
9.5-7	00-01 RN12-020	December 2000 March 2016
9.5-8	02-01	May 2002
9.5-9	00-01 RN12-020	December 2000 March 2016
9.5-10	00-01 RN12-020	December 2000 March 2016
9.5-11	00-01	December 2000
9.5-12	00-01	December 2000
9.5-13	00-01	December 2000
9.5-14	02-01	May 2002
9.5-15	00-01	December 2000
9.5-16	RN04-001	June 2004
9.5-17	RN02-008 RN04-001	May 2003 June 2004
9.5-18	RN02-008	May 2003
9.5-19	00-01	December 2000

Page / Fig. No.	Amend. No.	Date
9.5-20	00-01	December 2000
9.5-21	RN04-039	December 2005
9.5-22	00-01	December 2000
9.5-23	00-01	December 2000
9.5-24	00-01	December 2000
9.5-25	00-01	December 2000
9.5-26	00-01	December 2000
	RN12-020	March 2016
	RN12-024	March 2016
9.5-27	00-01	December 2000
9.5-28	02-01	May 2002
9.5-29	02-01	May 2002
9.5-30	02-01	May 2002
9.5-31	02-01	May 2002
9.5-32	02-01	May 2002
9.5-33	00-01	December 2000
Fig. 9.5-1 (Sh 1)	RN04-038	February 2005
	RN18-005	April 2018
9.5-1 (Sh 2)	RN13-006	October 2015
9.5-1 (Sh 3)	RN12-014	November 2012
	RN12-021	April 2013
9.5-1 (Sh 4)	98-01	April 1998
9.5-1 (Sh 5)	RN09-014	May 2010
	RN12-021	April 2013
	RN15-006	April 2018
9.5-1 (Sh 6)	deleted	November 2011
9.5-1a	RN10-009	May 2010
9.5-1b	02-01	May 2002
9.5-1c	00-01	December 2000
9.5-1d	02-01	May 2002
9.5-1e	02-01	May 2002
9.5-1f	RN14-012	April 2015
9.5-1g	02-01	May 2002
9.5-1h	RN10-018	November 2011
	RN 11-001	November 2011
9.5-2	RN05-028	December 2005
9.5-2a	0	August 1984
9.5-3	RN02-008	May 2003
9.5-4	0	August 1984
9.5-5	0	August 1984
9.5-6	0	August 1984
9.5-7	0	August 1984
9.5-8	0	August 1984
9.5-9	0	August 1984
9.5-10	0	August 1984
9.5-11	RN04-043	December 2004

9.0 AUXILIARY SYSTEMS

9.1 FUEL STORAGE AND HANDLING

9.1.1 NEW FUEL STORAGE

9.1.1.1 Design Bases

New fuel is stored in racks (see Figure 9.1-1). Each rack is composed of individual vertical cells which are fastened together in any number to form a module that is firmly bolted to anchors in the floor of the new fuel storage area. The racks consist of two arrays of storage cells, each containing 30 cells in a 2 x 15 pattern. The new fuel storage racks are designed to include storage for 60 assemblies at a center to center spacing of 21 inches. The new fuel storage rack cells are 14 ft-4 in. high and 0.078 inches thick. This spacing provides a minimum separation between adjacent fuel assemblies of 12 inches which is sufficient to maintain a subcritical array even in the event the building is flooded with unborated water. Surfaces that come into contact with the fuel assemblies are made of annealed austenitic stainless steel, whereas the supporting structure may be painted carbon steel.

The racks are designed to withstand nominal operating loads as well as safe shutdown earthquake (SSE) and operating basis earthquake (OBE) seismic loads. The racks are Safety Class 2b and meet the allowable stresses in the ASME Code, Section III, Appendix 17. The new fuel racks are designed to withstand a maximum uplift force of 5000 pounds.

The new fuel storage racks are designed to accommodate Westinghouse 17x17 fuel assemblies (STANDARD, VANTAGE 5, and VANTAGE+) with a maximum nominal enrichment of 5.0 weight percent U-235. RN 14-006

9.1.1.2 Facilities Description

The new fuel storage facility is located in the eastern end of the fuel handling building (see Figure 1.2-6). The facility consists of a concrete pit 27 feet deep by 15 feet wide by 28 feet long, covered by a removable grating. The new fuel storage racks are anchored to the floor of the facility and are designed to store fuel assemblies for 1/3 of a core.

9.1.1.3 Safety Evaluation

The design of normally dry new fuel storage racks is such that the effective multiplication factor does not exceed 0.98 with fuel of the highest anticipated enrichment in place, assuming optimum moderation (under dry, fogged, or flooded conditions). Credit is taken for the inherent neutron-absorbing effect of the materials of construction.

The new fuel assemblies are stored dry and the 21 inch center to center spacing ensures an eversafe geometric array. Space between storage positions is blocked to prevent insertion of fuel. Under these conditions, a critically accident during refueling and storage is precluded.

An exemption from the requirements of 10CFR70.24, "Criticality Accident Requirements", has been granted to VCSNS based on the design and administrative controls associated with new and spent fuel storage. In response to two VCSNS letters to the NRC requesting the 10 CFR 70.24 exemption (Reference 1 and Reference 2), the NRC granted an exemption listing seven criteria to maintain the exemption valid (Reference 3). RN 97-101

1. Plant procedures do not permit more than one PWR fuel assembly to be in storage or in transit between its associated shipping cask or storage rack at one time.

2. The k-effective of the fresh fuel storage racks filled with fuel of the maximum permissible U-235 enrichment and flooded with pure water does not exceed 0.95 at a 95% probability, 95% confidence level.

3. If optimum moderation of fuel in the fresh fuel storage racks occurs when the fresh fuel storage racks are not flooded, the k-effective corresponding to this optimum moderation does not exceed 0.98 at a 95% probability, 95% confidence level. RN 13-028

4. The k-effective of spent fuel storage racks filled with fuel of the maximum permissible U-235 enrichment and flooded with pure water does not exceed 0.95 at 95% probability, 95% confidence level.

5. The quantity of forms of special nuclear material, other than nuclear fuel, that are stored on site in any given area is less than the quantity necessary for critical mass.

6. Radiation monitors, as required by GDC 63, are provided in the fuel storage and handling areas to detect excessive radiation levels and to initiate appropriate safety actions.

7. The maximum nominal U-235 enrichment is 5 wt%.

9.1.2 SPENT FUEL POOL STORAGE

RN 13-018

9.1.2.1 Design Bases

Spent fuel is stored in racks (see Figure 9.1-2). The high density spent fuel racks consist of individual cells with 8.85" x 8.85" (nominal) square cross section, each of which accommodates a single fuel assembly. The cells are arranged in modules of varying size. A total of 1712 cells are arranged in 12 distinct modules in 2 regions. Figure 9.1-2a shows the arrangement of the rack modules in the spent fuel pool. Figures 9.1-2a and 9.1-2b show the typical Region 1 rack structure and cell assemblage detail. Figures 9.1-2c and 9.1-2d show the typical Region 2 rack structure and cell assemblage detail. Table 911-2 provides relevant design data on each region. The modules in the 2 regions are of 3 different types. Table 9.1-3 summarizes the physical data for each module type.

RN 03-017

Region 1 is designated for storage of new or freshly discharged fuel assemblies with a maximum nominal enrichment of 4.95 weight percent U-235.

Region 2 is designed to accommodate the storage of fuel assemblies with a maximum nominal initial enrichment of 4.95 weight percent U-235 with a minimum burnup and up to 5.0 weight percent U 235 with a minimum burnup of 41,611 MWD/MTU or fuel of initial enrichment and burnup combinations within the acceptable domain depicted in Figure 4.3-44. The above limits are applicable to Westinghouse 17x17 fuel assemblies (STANDARD, VANTAGE 5, and VANTAGE+).

RN 03-017

The modules are not anchored to the pool floor, to each other, or to the pool walls. A minimum gap of 1" is provided between the modules to ensure that kinematic movements of the modules during the plant design basis earthquake will not cause inter-module impact. Adequate clearance with other pool hardware, e.g., light fixtures, etc. is also provided.

The spent fuel storage rack design ensures the separation between spent fuel assemblies. Space between storage positions is sufficient to permit insertion of a fuel assembly. All rack surfaces that come into contact with fuel assemblies consist of austenitic stainless steel. These materials are resistant to corrosion during normal and emergency water quality conditions.

RN 03-017

Spent fuel racks are designed to withstand shipping, handling, normal operating loads (impact and dead loads of fuel assemblies) as well as SSE loads. The racks are Safety Class 2b and meet the American Institute of Steel Construction (AISC) requirements. The spent fuel racks are also designed to meet the Seismic Category 1 requirements of Regulatory Guide 1.13 (see Appendix 3A).

The spent fuel storage racks are designed with adequate energy absorption capabilities to withstand the impact of a dropped spent fuel assembly from the maximum lift height of the fuel handing machine. Cranes capable of carrying loads heavier than that

incurred in handling a failed fuel assembly are prevented by design from traveling over the spent fuel pool.

The spent fuel racks can withstand an uplift force greater than the uplift force of the fuel handling machine.

Shielding requirements are discussed in Section 9.1.4.3.4. Radiological considerations are discussed in Chapter 12.

9.1.2.2 Facilities Description

The spent fuel pool is located in the western end of the fuel handling building (see Figure 1.2-6). The pool is a stainless steel lined pit 39 feet long by 28 feet wide by 39 feet deep. The normal water level at elevation 461.5 feet provides approximately 24 feet of water shielding over the stored spent fuel assemblies. 00-01

During normal operation, the spent fuel pool is isolated from the fuel transfer canal by a removable stainless steel gate.

The stainless steel liner welds are equipped with a leak detection system to monitor and locate liner weld leaks.

9.1.2.3 Safety Evaluation

Design of this storage facility ensures a safe condition under normal and postulated accident conditions. Consideration of criticality safety analysis is discussed in Section 4.3.2.7. Compliance with Regulatory Guide 1.13 is discussed in Appendix 3A.

The spent fuel cooling system is discussed in Section 9.1.3. 98-01

9.1.3 SPENT FUEL COOLING SYSTEM

The spent fuel cooling system cools spent fuel pool water to remove decay heat from the spent fuel elements. It also provides for purification of the water in the spent fuel pool and refueling water storage tank (RWST), provides for transfer of water between the RWST and spent fuel pool, maintains boron concentrations, monitors radiation levels and monitors and maintains spent fuel pool water level to ensure adequate cooling and shielding.

9.1.3.1 Design Bases

The spent fuel cooling system is designed to perform the following functions:

1. While performing a core shuffle (72 assemblies off-loaded), maintain the Spent Fuel Pool Water temperature to less than 152.53°F using 1 Spent Fuel Cooling (SFC) heat exchange. This peak temperature is due to a heat load based on decay heat generation from 72 assemblies with an exposure of 55 GWD/MTU, RN 03-017

cooled for 72 hours, and moved to the Spent Fuel Pool in exactly 20 hours; plus 1709 spent fuel assemblies with exposures up to 55 GWD/MTU and cooled for 18 months or more. All fuel assemblies discharged through 1996 are assumed to have been burnt at 2775 MWt. All Fuel assemblies discharged after 1996 are assumed to have been burnt at 2900 MWt. The maximum net heat load for this case is 20.71 MBTU/HR, considering passive heat losses (including evaporative cooling effects) of 1.01 MBTU/HR.

2. For a full core off-load (157 assemblies off-loaded), maintain the Spent Fuel Pool Water temperature to less than 150.97°F using 2 SFC heat exchangers. This peak temperature is due to a heat load based on decay heat generation from 157 assemblies with exposures of 30.25 GWD/MTU (13 assemblies), 52.25 GWD/MTU (72 assemblies) and 55 GWD/MTU (72 assemblies) cooled for 72 hours, and moved to the SFP in exactly 20 hours; plus 1565 assemblies with exposures up to 55 GWD/MTU and cooled for 18 months, or more. All fuel assemblies discharged through 1996 are assumed to have been burnt at 2775 MWt. All fuel assemblies discharged after 1996 are assumed to have been burnt at 2900 MWt. The maximum net heat load coincident with peak bulk temperature for this case is 40.16 MBTU/HR, considering passive heat losses (including evaporative cooling effects) of 0.95 MBTU/HR.

3. For a full core off-load (157 assemblies off-loaded), maintain the Spent Fuel Pool Water temperature to less than 170°F using 1 SFC heat exchanger with an augmented Spent Fuel cooling system water flow rate of 2400 gpm. This peak temperature is due to a heat load based on decay heat generation from 157 assemblies with exposures of 30.25 GWD/MTU (13 assemblies), 52.25 GWD/MTU (72 assemblies) and 55 GWD/MTU (72 assemblies). Cooling times are calculated as a function of the component cooling water temperature into the SFC heat exchanger, which is varied from 85°F to 105°F, and range from 58 hours (85°F cooling water) to 146 hours (105°F cooling water). The full core off-load is moved into the SFP in exactly 20 hours; with the SFP already containing 1565 assemblies with exposures up to 55 GWD/MTU and cooled for 18 months or more. All fuel assemblies discharged through 1996 are assumed to have been burnt at 2775 MWt. All fuel assemblies discharged after 1996 are assumed to have been burnt at 2900 MWt. The maximum net heat load coincident with peak bulk temperature for this case is 40.74 MBTU/HR, considering passive losses (including credit for evaporative cooling effects of 1.77 MBTU/HR. RN 03-017

4. An abnormal fuel off-load is one where a full core is off-loaded 36 days after 72 assemblies were placed in the spent fuel pool. For an abnormal off-load, maintain the SFP water temperature to less than 149.53°F using 2 SFC heat exchangers. This peak temperature is due to a heat load based on decay heat generation from 157 assemblies with exposures of 2778 MWD/MTU (72 assemblies), 31884 MWD/MTU (72 assemblies) and 53884 MWD/MTU (13 assemblies), cooled for 72 hours and moved to the SFP in exactly 20 hours; plus 1565 assemblies with exposures up to 55 GWD/MTU and cooled for 19 months or more. The maximum

net heat load coincident with peak bulk temperature for this case is 38.84 MBTU/HR, considering passive losses (including evaporative cooling effects) of 0.90 MBTU/HR, and single failure does not have to be considered.

5. Transfer water between the RWST and the refueling cavity.

6. Maintain the purity and clarity of water in the spent fuel pool and/or the refueling cavity at acceptable levels by means of skimming, filtering and/or demineralizing the water to remove corrosion and fission products.

7. Provide means for adding boric acid to the spent fuel pool to maintain the boron concentrations at a nominal 2000 ppm. RN 03-017

8. Provide means to add demineralized water to the spent fuel pool to make up for evaporation losses.

9. Monitor spent fuel coolant for excessive radioactivity due to defective fuel elements.

10. Provide for filtering and/or demineralization to clean the water in the RWST.

11. Maintain a water shield above the spent fuel elements to limit radiation levels in the area of the pool to less than 2.5 mr/hr.

The components of the system are classified as Safety Class 2b, except for equipment and piping associated with the spent fuel purification pump, spent fuel cooling demineralizer and spent fuel purification filters; and radiation monitor, RM-L4. These components are not safety-related. The RWST is Safety Class 2a.

Safety Class 2a piping, valves and equipment are designed, fabricated, tested and inspected in accordance with the ASME Code, Section III, Class 2.

Safety Class 2b piping, valves and equipment are designed, fabricated, tested and inspected in accordance with the ASME Code, Section III, Class 3.

Isolation of nonessential portions of the spent fuel cooling system is provided.

9.1.3.2 System Description

A spent fuel cooling system diagram is included as Figure 9.1-3.

The spent fuel cooling system consists of three basic loops: The spent fuel cooling loop; the spent fuel cooling and transfer loop; and the spent fuel purification loop.

The spent fuel cooling loop provides for cooling of the spent fuel pool. Cooling water is removed from the pool through four 6 inch lines, is pumped by the spent fuel cooling pump through spent fuel heat exchanger A and is returned to the pool through four 6 inch lines.

The spent fuel cooling and transfer loop serves as an alternate or supplement to the spent fuel cooling loop when required. It also serves to transfer water between the several storage volumes associated with the fuel handling and storage systems, including the RWST, fuel transfer canal, refueling cavity, and the cask loading area. The loop consists of the spent fuel cooling and transfer pump, spent fuel heat exchanger B, and interconnecting piping as shown on Figure 9.1-3.

Loop seal piping is installed to ensure the minimum required Technical Specification RWST volume is protected from potential line breaks in the non-safety portion of the purification loop. RN 15-007

The major components of the purification loop are the spent fuel purification pump, spent fuel cooling demineralizer, and two spent fuel purification filters in parallel. Normally the purification loop takes suction from the spent fuel pool skimmers, pumps the water through the spent fuel cooling demineralizer and the spent fuel purification filters, and returns the water to the spent fuel pool. This loop can also take suction from the spent fuel pool, RWST, cask loading area skimmer, refueling cavity, fuel transfer canal drain or cask loading area drain. The purification loop can also discharge to the RWST, fuel transfer canal, refueling cavity, and the return line to the cask loading area.

The RWST is included in the spent fuel cooling system. It is an atmospheric storage tank in an open Seismic Category 1 structure. It is equipped with an overflow line, one vent line to the Auxiliary Building plant vent, and heat tracing. Outdoor system piping connecting to the tank is equipped with separate, redundant heat tracing circuits. 98-01

The RWST vent is piped directly to the auxiliary building charcoal exhaust system. The vent line is of 8 inch, schedule 40 pipe with runs of approximately 2 feet vertically, 25 feet horizontally and 4 feet sloping higher by 2-1/2 feet where it enters the auxiliary building. This vent piping is designed to Quality Related Standards to ensure that the vent piping remains functional following design wind and seismic loading. Since normally there is no air flow in the RWST vent line, it has been concluded that no appreciable amount of moisture could accumulate in the line. Therefore, the probability of blockage due to freezing is considered negligible.

Component data are presented in Table 9.1-1.

9.1.3.3 Safety Evaluation

Equipment, piping and components of the spent fuel cooling system are housed in Seismic Category 1 structures. Piping lines entering and exiting from the spent fuel pool are located at elevation 460’-3" and are provided with anti-siphoning holes to preclude draining the pool below this level. This low water level was established to satisfy the requirements of the following criteria:

1. Minimize the dose rate at the pool surface during spent fuel transfer in the unlikely event of a coincident pipe break in a line entering or exiting the spent fuel pool. 99-01

2. Assure that the Technical Specification requirement of 23 feet of water is maintained over the top of irradiated fuel assemblies located in the spent fuel pool storage racks.

3. Not to exceed the 10 CFR 71.73 cask drop design criterion for the spent fuel cask, a minimum water height above the cask loading area is required so that a cask drop through air and water will not generate a calculated impact velocity greater than 44 ft/sec. 98-076

   At the start of fuel handling operations, the water level in the cask load area is the same as and is controlled by the spent fuel pool water level. Therefore, at the design low water level of the pool, a minimum water level of 40.5 feet above the bottom of the cask load area is available to satisfy the cask drop design criterion. 98-076 It has been determined that the cask drop through 3.75 feet of air plus 40.5 feet through water will generate an impact velocity of less than 44 ft/sec at the cask load area floor. 98-076

The suction lines inside the spent fuel pool are positioned to take suction approximately 4 feet below the normal water level to minimize vortexing and the possibility of floating debris entering the system. The return cooling lines from the spent fuel heat exchangers are located inside the pool such that cooled water is discharged downward. RN 03-017 This ensures adequate dispersion of the cold water around the stored spent fuel assemblies. Each suction and return line in the pool is provided with a small anti-siphoning hole (approximately 1/2 inch) located 1 foot, three inches below the normal water level (460'3") to prevent draining the pool below the design low water level in the event of a postulated pipe break occurring outside the pool below the low water level. 98-076

Also, there are no drain lines connected to the spent fuel pool. The suction and return lines are located on opposite sides of the pool to prevent channeling and to obtain maximum circulation of the pool water. 98-076 During fuel handling operations with the pool at the normal water level, about 10 feet of water shielding is available during the transfer of spent fuel elements. 99-065 00-025

Normal makeup water to the pool is available from the demineralized water storage tank. Emergency makeup water to the pool is available from the RWST, which is Safety Class 2a, or from the reactor makeup water storage tank (RMWST), which is Safety Class 2b. Pumps from three separate systems: spent fuel cooling and purification pumps, Reactor Makeup Water pumps, and demineralized water transfer pumps are available for the transfer of water.

The spent fuel pool water is cooled by either one of two redundant spent fuel cooling water loops. Each loop contains a pump, heat exchanger, piping, valves and instrumentation. The pumps can be powered from separate emergency (diesel) power sources.

Typical refueling practice is to perform a full core off-load with two spent fuel cooling pumps in operation. For a full core offload, the spent fuel cooling system is required to maintain the spent fuel pool water below a temperature of 170°F (which is the limit of the structural integrity analysis) during normal operation with one spent fuel cooling loop in operation and at or below the bulk boiling temperature during an emergency (i.e., abnormal full core offload with both spent fuel cooling loops in operations). The design assumptions and peak SF Pool water temperatures are described in section 9.1.3.1 and preserved through plant procedures that require the following:

RN 05-010

1. Prior to the start of core offload, both SFC loops be available with a minimum of one loop in operation.

2. If the indicated pool temperature is ≥ 120°F,

   a. Both spent fuel cooling loops be in operation, or
   b. In the event of a spent fuel pump is unavailable, flow in the operating cooling loop is increased to ≥ 2400 gpm.

3. Multiple reliable sources of electric power be maintained to the SF pumps, including at least one diesel generator backed, safety related electrical bus for spent fuel pool cooling at all times that spent fuel is being moved and while the full core is off-loaded.

Although two SFP cooling loops are typically functional and are supplied by 1E electrical buses, administrative controls provide for an ESF bus outage when spent fuel is being moved or while the full core is offloaded. If 1E power is not available to one of the cooling loops, contingency plans call for temporary cables to be pre-staged so that the idle spent fuel cooling pump can be quickly connected to a reliable source of offsite power. In the unlikely case that all SF cooling is lost, sufficient time exists to provide makeup water to the pool to preclude the fuel from becoming uncovered.

RN 01-069 05-010

The degree of conformance of the design of the spent fuel cooling system and the fuel handling system with the recommendations of Regulatory Guide 1.13 is addressed in Appendix 3A.

9.1.3.4 Inspection and Testing Requirements

Testing requirements of this system are satisfied through system operation. The spent fuel cooling pump and spent fuel cooling and transfer pump are alternated during normal cooling to equalize wear. Routine inspections of system piping and components are made during system operation.

9.1.3.5 Instrumentation Requirements

Measurement and monitoring of radiation, pressure, level, flow rate, and temperature are performed for purposes of indication, alarm, control, and record maintenance. A leakage detection system is provided to detect leakage from the spent fuel pool and determine the location of the leakage.

9.1.3.5.1 Radiation Measurement

See Section 11.4 for details.

9.1.3.5.2 Pressure Measurement

Pressure gages provide local indication for the following points in the system: inlets to suction strainers, suctions and discharges of spent fuel cooling and transfer pump and spent fuel cooling pump, suction and discharge of spent fuel purification pump, and inlet and outlet of spent fuel purification filters.

Pressure test connections are provided on the outlet of each spent fuel heat exchanger.

9.1.3.5.3 Level Measurement

During transfer of spent resin to the spent resin storage tank from the spent fuel cooling demineralizer, the demineralizer resin probe lights a local status light when the demineralizer is empty.

RWST level measurement consists of four independent level channels, each having control room indication. These loops perform a post accident monitoring function (see Section 7.5 for more detail); provide annunciator inputs of maximum fill, minimum fill, low-low, and empty liquid levels; and analog input to the plant computer. Each loop is independent and physically separated from the other.

Safety classification of these loops is Class 1E for equipment which provides the post accident monitoring function.

The spent fuel pool has two level measurement loops, each having control room indication and one loop inputting to the plant computer. High and low pool levels are annunciated in the control room and locally. These level loops are physically separated.

The fuel transfer canal, refueling cavity, and cask loading area each have a level loop providing control room indication and control room annunciation of high and low water levels. Additionally, the fuel transfer canal and cask loading area level inputs are sent to the plant computer.

9.1.3.5.4 Flow Rate Measurement

The spent fuel cooling and the spent fuel cooling transfer piping loops each have flow rate measurement instrumentation providing control room indication, low flow annunciation in the control room (not actuated unless spent fuel cooling or transfer pump breaker is closed) and analog input to the plant computer. These flow loops are physically separated.

The purification piping loop has a local flow indicator which is located downstream of the purification filters.

9.1.3.5.5 Temperature Measurement

RWST temperature measurement consists of two temperature loops. Each loop provides control room indication and one loop provides analog input to the TSC computer.

The spent fuel pool has two temperature measurement loops, each providing control room indication and annunciation of high temperature. In addition, one of the loops provides analog inputs to the plant and TSC computers. These channels are physically separate and redundant.

The refueling cavity has a temperature loop which provides control room indication and high temperature annunciation in the control room.

02-01

Spent fuel heat exchangers A and B both have local temperature indicators on the inlet and outlet.

In the spent fuel purification demineralizer inlet piping there is a temperature switch with input to the control room annunciator for high temperature.

9.1.4 FUEL HANDLING SYSTEM

9.1.4.1 Design Bases

The Fuel Handling System (FHS) consists of equipment and structures utilized for the refueling operation in a safe manner meeting General Design Criteria 61 and 62 of 10 CFR 50, Appendix A.

The following design bases apply to the FHS.

1. Fuel handling devices have provisions to avoid dropping or jamming of fuel assemblies during transfer operation.

2. Handling equipment has provisions to avoid dropping of fuel handling devices during the fuel transfer operation.

3. Handling equipment used to raise and lower spent fuel have a limited maximum lift height so that the minimum required depth of water shielding is maintained.

4. The Fuel Transfer System (FTS), where it penetrates the containment, has provisions to preserve the integrity of the containment pressure boundary.

5. Criticality during fuel handling operations is prevented by geometrically safe configuration of the fuel handling equipment.

6. Handling equipment will not fail in such a manner as to preclude the safety function of Seismic Category 1 equipment in the event of a SSE.

7. The inertial loads imparted to the fuel assemblies or core components during handling operations are less than the loads which could cause damage.

8. Physical safety features are provided for personnel operating fuel handling equipment.

9.1.4.2 System Description

The FHS consists of the equipment needed for transporting and handling fuel from the time it reaches the station until it leaves the station. Basically this equipment is comprised of fuel assemblies, core component and reactor component hoisting equipment, fuel handling equipment, and the FTS. The structures associated with the fuel handling equipment are the refueling cavity, the refueling canal, the fuel transfer canal, the spent fuel pool, and the new fuel storage area.

New fuel assemblies received for initial fuel loading are removed one at a time from the shipping container and stored in both the new and spent fuel storage racks. Normally, new fuel assemblies received after the initial fuel loading are stored in the new fuel storage racks located in the new fuel storage area.

A new fuel assembly is delivered to the reactor by removing a new fuel assembly from the storage rack, placing it into the new fuel elevator, lowering it into the fuel transfer canal, rotating to horizontal and transferring it through the FTS.

The fuel handling equipment is designed to handle the spent fuel assemblies underwater from the time they leave the reactor vessel until they are placed in a cask for removal from the Fuel Handling Building (for either transfer to the ISFSI for dry cask storage or for shipment from the site). Underwater transfer of spent fuel assemblies provides an effective, economic, and transparent radiation shield, as well as a reliable cooling medium for removal of decay heat. The boric acid concentration in the water provides an additional margin to preclude criticality. RN 13-018

The associated fuel handling structures may be generally divided into: the refueling cavity, the refueling canal and fuel transfer canal which are flooded during plant shutdown for refueling, the spent fuel pool which is kept full of water and is accessible to operating personnel, and the new fuel storage area. The refueling canal and the fuel transfer canal are connected by a fuel transfer tube. This tube is fitted with a blind flange on the refueling canal end and a gate valve on the fuel transfer canal end. The blind flange is in place except during refueling to ensure containment integrity. Fuel is carried through the fuel transfer tube on an underwater transfer car.

During Dry Cask Storage operations in the Fuel Handling Building, the fuel transfer canal and the cask loading pit are flooded for cask loading and unloading. RN 13-018

Fuel is moved between the reactor vessel and the refueling canal by the refueling machine. A rod cluster control changing fixture is located in the refueling canal for transferring control elements from one fuel assembly to another fuel assembly. The FTS is used to move fuel assemblies between the reactor building and the fuel handling building. After a fuel assembly is placed in the fuel container, the lifting arm pivots the fuel assembly to the horizontal position for passage through the fuel transfer tube. After the transfer car transports the fuel assembly through the fuel transfer tube, the lifting arm at that end of the tube pivots the assembly to a vertical position so that the assembly can be lifted out of the fuel container. 00-01

In the spent fuel pool and the fuel transfer canal, fuel assemblies are moved about by the fuel handling machine. When lifting spent fuel assemblies, the hoist uses a long handled tool to assure that sufficient radiation shielding is maintained. A shorter tool is used to handle new fuel assemblies initially, but the new fuel elevator must be used to lower the assembly to a depth at which the fuel handling machine, using the long handled tool, can place the new fuel assemblies into or out of the fuel storage racks.

Decay heat, generated by the spent fuel assemblies in the spent fuel pool, is removed by the spent fuel cooling system. After a sufficient decay period, the spent fuel assemblies are removed from the spent fuel racks and loaded into casks for removal from the Fuel Handling Building. RN 13-018

9.1.4.2.1 Refueling Procedure

The refueling operation follows a detailed procedure which provides a safe and efficient refueling operation. Before refueling operations the reactor coolant system is borated and cooled down to refueling shutdown conditions as specified in the Technical Specifications. Criticality protection for refueling operations, including a requirement for checks of boron concentration, at least once per 72 hours is specified in the Technical Specifications. The following significant points are assured by the refueling procedure: 02-01

1. The refueling water and the reactor coolant contain over 2000 ppm boron. This concentration, together with the negative reactivity of control rods, is sufficient to keep the core reactivity less than or equal to 0.95 K_{eff} during the refueling operations. A reactivity penalty for the withdrawal of the highest worth rod is included in the reactivity calculation. 00-01

2. The water level in the refueling cavity is high enough to keep the radiation levels within acceptable limits when the fuel assemblies are being removed from the core.

The refueling operation is divided into four major phases: 1) preparation, 2) reactor disassembly, 3) fuel handling, and 4) reactor assembly. A general description of a typical refueling operation through the four phases is given below:

1. Phase I - Preparation

   The reactor is shutdown and cooled to cold shutdown conditions with a final $K_{eff} \leq 0.95$ (all rods in minus 1). Following a radiation survey, the reactor building is entered. At this time, the coolant level in the reactor vessel is lowered to a point slightly below the vessel flange. Checking of the fuel transfer equipment and refueling machine for proper operation is begun in this phase. 00-01 02-01

2. Phase II - Reactor Disassembly

   All cables, air ducts, and insulation are removed from the vessel head. The refueling cavity is then prepared for flooding by sealing off the reactor cavity; checking of the underwater lights, tools, and finishing checks of the fuel transfer system and continuing checks of the refueling machine; closing the refueling canal drain holes; and removing the blind flange from the fuel transfer tube. With the refueling cavity prepared for flooding, the vessel head is taken to its storage pedestal. Water from the refueling water storage tank is pumped either into the fuel transfer canal and the refueling cavity by the Spent Fuel Cooling system, or into the reactor coolant system by the residual heat removal pumps causing the water to overflow into the refueling cavity. When the water reaches a safe shielding depth, (see Section 9.1.4.3.4) the control rod drive shafts are disconnected and, with the upper internals, are removed from the vessel. The fuel assemblies and rod cluster control assemblies are now free from obstructions and the core is ready for refueling. Checking of the refueling machine is completed at this time. 02-01 98-01 02-01

3. Phase III - Fuel Handling

The refueling is accomplished by either a full core off-load and re-load to and from the Spent Fuel Pool or a core shuffle. The full core off-load removes all of the fuel from the reactor vessel to the spent fuel pool. There, the rod cluster control assemblies are shifted between fuel assemblies as necessary, by a portable rod cluster control changing tool suspended from the fuel handling machine. When ready, the fuel assemblies are loaded into the vessel in the designed pattern. New fuel assemblies are usually pre-staged in the spent fuel pool to expedite the reload, but can be moved from the new fuel pit into the fuel container with the new fuel elevator and fuel handling machine. The core shuffle moves fuel assemblies within the reactor vessel, only removing those most depleted to the spent fuel pool and replacing them with new or only partially depleted fuel assemblies brought from the spent fuel pool or new fuel pit. The rod cluster control assemblies are shifted between fuel assemblies as necessary by the rod cluster control changing fixture, which is in the refueling canal of the reactor building. 02-01

The following describes the steps of a core shuffle:

a. The refueling machine is positioned over a fuel assembly in the core.

b. The fuel assembly is lifted by the refueling machine to a predetermined height sufficient to clear the reactor vessel and still leave sufficient water covering the fuel assembly to eliminate any radiation hazard to the operating personnel.

c. If the removed assembly contains a rod cluster control assembly, the assembly is placed in the rod cluster control changing fixture by the refueling machine. The rod cluster control assembly is removed from the spent fuel assembly and put in a new fuel assembly or in a partially spent fuel assembly previously placed in the changing fixture.

d. The fuel transfer car is moved into the refueling canal from the fuel transfer canal.

e. The fuel assembly container is pivoted to the vertical position by the lifting arm.

f. The refueling machine is moved to line up the spent fuel assembly with the FTS.

g. The refueling machine loads a spent fuel assembly into the fuel assembly container of the transfer car.

h. The fuel assembly container is pivoted to the horizontal position by the lifting arm.

i. The fuel assembly container is moved through the fuel transfer tube to the fuel transfer canal by the transfer car.

j. The fuel assembly container is pivoted to the vertical position. The spent fuel assembly is unloaded by the spent fuel handling tool attached to the fuel handling machine.

k. The spent fuel assembly is moved into the spent fuel pool and placed in a spent fuel storage rack by the fuel handling machine.

l. The new fuel assembly is taken from the new fuel storage rack and loaded into the new fuel elevator by the fuel handling building crane. The fuel handling machine takes the fuel from the new fuel elevator and places it in the fuel assembly container. Alternatively the new fuel is pre-staged in the spent fuel pool and is moved to the fuel assembly container by the fuel handling machine. 02-01

m. The fuel assembly container is pivoted to the horizontal position and the transfer car is moved back into the refueling canal.

n. Partially spent fuel assemblies are relocated in the reactor core, and new fuel assemblies are added to the core.

o. Any new assembly or transferred fuel assembly that is placed in a control position is first placed in the rod cluster control changing fixture to receive a rod cluster control from a spent fuel assembly.

p. This procedure is continued until refueling is completed.

4. Phase IV - Reactor Assembly

Reactor assembly, following refueling, is essentially achieved by reversing the operations given in Phase II - Reactor Disassembly.

9.1.4.2.2 Component Description

9.1.4.2.2.1 Refueling Machine

The refueling machine (see Figure 9.1-4) is a rectilinear bridge and trolley system with a vertical mast extending down into the refueling water. The bridge spans the refueling cavity and the refueling canal and runs on rails. The bridge and trolley motions are used to position the vertical mast over a fuel assembly in the core. A long tube with a pneumatic gripper on the end is lowered down out of the mast to grip the fuel assembly. The gripper tube is long enough so that the upper end is still contained in the mast

when the gripper end contacts the fuel. A winch mounted on the trolley raises the gripper tube and fuel assembly up into the mast tube. The fuel is transported while inside the mast tube to its new position.

The refueling machine uses a single variable frequency drive mounted in the motor control console to control the speeds of the bridge, trolley and main hoist motors. This is an electronic device that provides step-less variable speeds from zero to full speed.

All controls for the refueling machine are mounted on a console in the trolley. The bridge is positioned on a coordinate system laid out on one rail. The trolley is positioned with the aid of a scale on the bridge structure. The drive for the bridge, trolley and main hoist provides for variable speeds and includes the ability for setting separate frequencies for setting jogging (inching) speeds for the bridge, trolley and main hoist. The maximum speed for the bridge is 65 fpm, 45 fpm for the trolley and 21 fpm for the main hoist. The auxiliary monorail hoist on the refueling machine has a two step magnetic controller to give hoisting speeds of approximately 7 and 20 fpm. 98-01

Refueling machine interlocks and permissives are provided by a Programmable Logic Controller (PLC) that is mounted inside the Control Console on the trolley. PLC interlocks and limit switches prevent damage to the fuel assemblies. The PLC tracks the inner mast position in order to stop the hoist from being raised above a safe shielding depth; this function is backed up with a physical limit switch. In an emergency, the bridge, trolley and main hoist can be operated manually using handwheels on the respective motors.

The refueling machine mast is equipped with hardware to support in-mast sipping - a failed fuel detection process.

9.1.4.2.2.2 Fuel Handling Machine

The fuel handling machine (see Figure 9.1-5) is a wheel-mounted walkway, spanning the spent fuel pool, the fuel transfer canal, and cask loading pit, which carries an electric monorail hoist on an overhead structure. The fuel handling machine is used for handling fuel assemblies within the spent fuel pool, the fuel transfer canal and the cask loading pit by means of a long handled tool suspended from the hoist. The hoist travel and tool length are designed to limit the maximum lift of a fuel assembly to a safe shielding depth.

The fuel handling machine has a 2 step magnetic controller for the bridge and hoist. The bridge speeds are 11 and 33 fpm and the hoist speeds are 7 and 20 fpm. A hydraulic coupling is used in the bridge drive to limit starting acceleration.

The hoist trolley is hand operated by a chain drive.

9.1.4.2.2.3 New Fuel Elevator

The new fuel elevator (see Figure 9.1-6) consists of a box-shaped assembly with its top end open, sized to house one fuel assembly that is raised and lowered by a winch and cable.

The new fuel elevator is normally used to lower a new fuel assembly to an elevation where it can be handled by the fuel handling machine with a long-handled spent fuel handling tool. The new fuel assembly can then be moved to the fuel basket of the transfer system during core loading or to the spent fuel pool to stage the assembly for core loading at a later date.

RN 04-024

The new fuel elevator is also used as a work platform for holding an irradiated fuel assembly. An example of this would be fuel assembly top nozzle reconstitution referred to in FSAR chapter 4. In this process, the irradiated fuel assembly is loaded into the New Fuel Elevator with the spent fuel handling tool and fuel handling machine and the elevator at the bottom of its travel. The elevator is then raised to a level with about 10 feet of water shielding available above the fuel. The New Fuel Elevator controls have been modified and administrative controls are also used to control the process to ensure that radiation dose rates to personnel remain within acceptable limits.

9.1.4.2.2.4 Fuel Transfer System

The FTS (see Figure 9.1-7) is a transfer car that runs on tracks extending from the refueling canal through the fuel transfer tube and into the fuel transfer canal. The car is moved along the track via a cable/winch system. A hydraulically actuated lifting arm is at each end of the fuel transfer tube. The fuel container in the refueling canal receives a fuel assembly in the vertical position from the refueling machine. The fuel assembly is then lowered to a horizontal position for passage through the fuel transfer tube. After passing through the tube, the fuel assembly is raised to a vertical position for removal by a tool suspended from a hoist mounted on the fuel handling machine. The fuel handling machine them moves to a storage loading position and places the spent fuel assembly in the spent fuel storage racks.

99-065

During reactor operation, the transfer car is stored in the fuel transfer canal. A blind flange is bolted on the refueling canal end of the fuel transfer tube to seal the containment. The terminus of the tube outside the reactor building is closed by a gate valve.

9.1.4.2.2.5 Rod Cluster Control Changing Fixture

The rod cluster control changing fixture is supplied for periodic rod cluster control element inspections and for transfer of rod cluster control elements from one fuel assembly to another (see Figure 9.1-8). The major subassemblies which comprise the changing fixture are the frame and track structure, the carriage, the guide tube, the gripper, and the drive mechanism. The carriage is a moveable container supported by the frame and track structure. The tracks provide a guide for the 4 flanged carriage

wheels and allow horizontal movement of the carriage during changing operation. The positioning stops on both the carriage and frame, locate each of the three carriage compartments directly below the guide tube. Two (2) of these compartments are designed to hold individual fuel assemblies and the third is made to support a single rod cluster control element. Situated above the carriage and mounted on the refueling canal wall is the guide tube. The guide tube provides for the guidance and proper orientation of the gripper and rod cluster control element as they are being raised and lowered. The gripper is a pneumatically actuated mechanism responsible for engaging the rod cluster control element. It has two flexure fingers which can be inserted into the top of the rod cluster control element when air pressure is applied to the gripper piston. Normally the fingers are locked in a radially extended position. Mounted on the operating deck is the drive mechanism assembly which consists of the manual carriage drive mechanism, the revolving stop operating handle, the pneumatic selector valve for actuating the gripper piston, and the electric hoist for elevation control of the gripper.

9.1.4.2.2.6 Spent Fuel Assembly Handling Tool

The spent fuel assembly handling tool (see Figure 9.1-9) is used to handle new and spent fuel assemblies in the fuel transfer canal and the spent fuel pool. It is a manually actuated tool, suspended from the fuel handling machine, which uses four cam actuated latching fingers to grip the underside of the fuel assembly top nozzle. The operating handle to actuate the fingers is located at the top of the tool. When the fingers are latched a pin is inserted into the operating handle, which prevents the fingers from being accidentally unlatched during fuel handling operations.

9.1.4.2.2.7 New Fuel Assembly Handling Fixture

The new fuel assembly handling fixture (see Figure 9.1-10) is used to lift and transfer new fuel assemblies from the new fuel storage area to the new fuel elevator. It is a manually actuated tool suspended from the fuel handling building crane, which uses 4 cam actuated latching fingers to grip the underside of the fuel assembly top nozzle. The operating handles to actuate the fingers are located on the side of the tool. When the fingers are latched, the safety screw is turned in to prevent the accidental unlatching of the fingers.

9.1.4.2.2.8 Reactor Vessel Head Lifting Rig

The original Reactor Vessel Head lifting rig has been replaced with a special lifting device integrated into the Integrated Head Assembly (IHA), typically referred to as the reactor head service structure. This lifting rig assembly is part of the IHA and stays installed on the IHA during both refueling activities and normal power operations. This device complies with ANSI 14.6-1978 design requirements as documented in the IHA Design Report.

RN 16-003

RN 02-024 08-030 15-021

9.1.4.2.2.9 Cranes

1. Polar Crane

The reactor building polar crane is a single trolley, electric, overhead crane with a main hoist capacity of 360 tons and an auxiliary hoist capacity of 25 tons. The polar crane is used to lift the reactor vessel head and reactor internals prior to refueling operations.

The Polar Crane has two loading conditions, a "Construction" load, and a "Normal Operation" load. The "Construction" loading is 360 ton and does not consider seismic interaction. The "Normal Operation" loading is 157.5 ton and does consider seismic forces (i.e., crane will continue to hold a suspended load during and after a seismic event). During normal plant shutdown for refueling, seismic interaction is considered when loads, such as the reactor vessel head assembly, are suspended above irradiated fuel in the reactor vessel. RN 02-024

2. Fuel Handling Building Crane

The fuel handling building crane is a single trolley, electric, overhead crane with a main hoist capacity of 125 tons and an auxiliary hoist capacity of 15 tons. The fuel handling building crane is used to remove and replace the spent fuel pool gate; unload and transfer new fuel assemblies; and move, load, and unload casks during spent fuel transfer operations. RN 11-041

The Fuel Handling Building overhead bridge crane is a single-failure-proof crane with a capacity of 125 tons as described in Section 3.12.4.3. The crane is designed to hold the full rated capacity during and after a postulated seismic event. RN 11-041 RN 02-024

9.1.4.2.2.10 Reactor Vessel Internals Lifting Device

The reactor vessel internals lifting device (see Figure 9.1-11) is a structural frame positioned by the polar crane. The frame is lowered onto the guide tube support plate at the internals, and is mechanically connected to the support plate by 3 breech lock type connectors. Bushings on the frame engage guide studs in the vessel flange to provide guidance during removal and replacement of the internals package.

9.1.4.2.2.11 Reactor Vessel Stud Tensioner

The stud tensioners are employed to secure the head closure joint at every refueling. The stud tensioner is a hydraulically operated device that uses oil as the working fluid. RN 08-030 15-021

9.1.4.3 Safety Evaluation

9.1.4.3.1 Safe Handling

9.1.4.3.1.1 Design Criteria for the Fuel Handling System

1. The primary design requirement of the equipment is reliability. A conservative design approach was used for all load bearing parts. Where possible, components are used that have a proven record of reliable service. Throughout the design, consideration was given to the fact that the equipment will spend long idle periods stored in an atmosphere of 80oF and high humidity.

2. Except as otherwise specified the refueling machine and fuel handling machine are designed and constructed in accordance with Crane Manufacturer Association of America (CMAA) Specification 70.

3. The design load for the refueling machine and fuel handling machine was the normal dead and live loads plus the maximum hoist load.

4. The allowable stresses for the refueling machine and fuel handling machine structures supporting the weight of the fuel, are as specified in Subarticle XVII-2200 of Appendix XVII of the ASME Code, Section III, 1974 Edition.

   Hoisting components loaded in simple tension have an allowable stress of 0.20 ultimate stress maximum.

5. All components critical to the operation of the equipment or located so that parts can fall into the reactor are assembled with the fasteners positively restrained from loosening under vibration. Spring or tooth type lock washers are not considered as positive restraints. If positive restraint cannot be achieved on fasteners on purchased components above the water line, then the fasteners must be lockwired, tack welded or backed out, coated with locking compound and retightened.

9.1.4.3.1.2 Industrial Codes and Standards Used in the Design of the Fuel Handling Equipment

1. Refueling Machine and Fuel Handling Machine: Applicable sections of CMAA Specification 70.

2. Structural: ASME Code, Section III, Appendix XVII, Subarticle XVII-2200, 1974 Edition.

3. Electrical: Applicable standards and requirements of IEEE Standard 279, National Electric Code, NFPA #70, and NEMA Standards MGI and ICS are used in the design, installation, and manufacturing of all electrical equipment.

4. Materials: Materials conform to the specifications of the ASTM standard.

5. Safety: OSHA Standards 29 CFR 1910, and 29 CFR 1926 including load testing requirements, the requirements of ANSI N18.2, Regulatory Guide 1.29 (see Appendix 3A) and General Design Criteria 61 and 62.

9.1.4.3.1.3 Refueling Machine

The refueling machine design includes the following provisions to ensure safe handling of fuel assemblies:

1. Electrical Interlocks

   a. Bridge, Trolley and Hoist Drive Mutual Interlocks

      The bridge, trolley, and hoist are interlocked such that only one motor can be operated at any one time either by the master or jog switches. If any one of the master or jog switches are actuated, all others are inactivated and have no effect on the current operating mode of the machine. The logic checks for actual motor operation and motor control relay status, and thus can stand a single failure. 98-01

   b. Bridge Trolley Drive - Gripper Tube Up

      With a fuel assembly attached, bridge and trolley motions are prevented except when the Gripper Tube Up interlock is actuated. The interlock is redundant and can withstand a single failure. 98-01

   c. Gripper Interlock

      Interlocks exists that prevent the solenoid valve that supplies air to the gripper actuator for disengagement to open except if both the mast is at the elevation that corresponds to Gripper Tube Down and a Slack Cable condition exists.

      As backup protection for this interlock the mechanical weight actuated lock in the gripper prevents operation of the gripper under load, even if air pressure is applied to the operating cylinder. This interlock is redundant and can withstand a single failure. 98-01

d. Excessive Suspended Weight

The load control system (integral to the PLC) will stop the hoist when overloads or underloads occur. A six way selector switch on the Control Console allows the operator to select between light and heavy assemblies and varying levels of overload. A master overload is programmable, yet non-bypassable and is set at a value to ensure fuel is protected. For underload, each of the positions on the selector switch has one value for hoist cut-out. 98-01

e. Hoist-Gripper Position Interlock

An interlock in the hoist drive circuit in the up direction, permits the hoist to be operated only when either the open or closed indicating switch on the gripper is actuated. The hoist-gripper position interlock consists of two logic paths that work parallel such that one path must be closed for the hoist to operate. If neither one of the gripper position limit switches are actuated, audible and visual alarms on the console will actuate. The interlock, therefore, is not redundant but can withstand a single failure since both an interlocking path and the monitoring path must fail to cause a hazardous condition. 98-01

2. Bridge and Trolley Hold-Down Devices

Both the refueling machine bridge and trolley are horizontally restrained on the rails by two pairs of guide rollers, one pair at each wheel location on one truck only. The rollers are attached to the bridge truck and contact the vertical faces on either side of the rail to prevent horizontal movement. Vertical restraint is accomplished by anti-rotation bars located at each of the four wheels for both the bridge and trolley. The anti-rotation bars are bolted to the trucks and, for the bridge restraints, extended under the rail flange, while for the trolley restraints, extended beneath the top flange of the bridge girder which supports the trolley rail. Both horizontal and vertical restraints are adequately designed to withstand the forces and overturning moments resulting from the SSE.

3. Design Load

The design load for structural components supporting the fuel assembly is the dead weight plus 4800 pounds (3 times the fuel assembly weight).

4. Main Hoist Braking System

The main hoists are equipped with 2 independent braking systems. A solenoid release-spring set electric brake is mounted on the motor shaft. This brake operates in the normal manner to release upon application of current to the motor and set when current is interrupted. The second brake is a mechanically actuated

load brake internal to the hoist gear box that sets if the load starts to overhaul the hoist. It is necessary to apply torque from the motor to raise or lower the load. In raising, this motor cams the brake open. In lowering, the motor slips the brake allowing the load to lower. This brake actuates upon loss of torque from the motor for any reason and is not dependent on any electrical circuits. 02-01

5. Fuel Assembly Support System

The main hoist system is supplied with redundant paths of load support such that failure of any one component will not result in free fall of the fuel assembly. Two wire ropes are anchored to the winch drum and carried over independent sheaves to a load equalizing mechanism on the top of the gripper tube. In addition, supports for the sheaves and equalizing mechanism are backed up by passive restraints to pick up the load in the event of failure of this primary support. Each cable system is designed to support 13,750 pounds or 27,500 pounds acting together.

The working load of a fuel assembly, with a Rod Cluster Control Assembling (RCCA) plus gripper is approximately 2000 pounds. 02-01

The gripper itself has four fingers gripping the fuel, any two of which will support the fuel assembly weight.

The gripper mechanism contains a spring actuated mechanical lock which prevents the gripper from opening unless the gripper is under a compressive load.

During each refueling outage and prior to removing fuel, the gripper and hoist system is routinely load tested to at least 3250 pounds. 02-01

9.1.4.3.1.4 Fuel Transfer System

The following safety features are provided for in the FTS.

1. Transfer Car Permissive Switch

The transfer car controls are located in the fuel handling building and conditions in the reactor building are, therefore, not visible to the operator. The transfer car permissive switch allows a second operator in the reactor building to exercise some control over car movement if conditions visible to him warrant such control. Transfer car operation is possible only when both lifting arms are in the down position as indicated by the limit switches. The permissive switch is a backup for the transfer car lifting arm interlock. Assuming the fuel assembly container is in the upright position in the reactor building and the lifting arm interlock circuit fails in the permissive condition, the operator in the fuel handling building still cannot operate the car because of the permissive switch interlock. The interlock, therefore, can withstand a single failure.

2. Lifting Arm - Transfer Car Position

Two redundant interlocks allow lifting arm operation only when the transfer car is at the respective end of its travel and therefore can withstand a single failure.

Of the two redundant interlocks which allow lifting arm operation only when the transfer car is at the end of its travel, one interlock is a position limit switch in the control circuit. The backup interlock is a frame down limit switch which not allow the car to traverse until both frame down limits are closed. Additionally, the lifting are will not operate while the car is traversing. 99-065

3. Transfer Car - Valve Open

A remote panel has been installed at the valve operator location which is equipped with lights which show the position of the valve. When the valve is full open only the red light is illuminated. While the valve is changing position (open - closed or closed - open) the red and green lights are illuminated. When fully closed the green light is illuminated. Tied to the red light only illumination (valve full open) is the traverse permissive. The carriage will not traverse with the valve not full open. In addition to the remote light indicating panel XPN5556, the control panel is equipped with a red light - valve open. 99-065

4. Transfer Car - Lifting Arm

The transfer car lifting arm is primarily designed to protect the equipment from overload and possible damage if an attempt is made to move the car when the fuel assembly container is in the vertical position. This interlock is redundant and can withstand a single failure.

The basic interlock is a position limit switch in the control circuit. The backup interlock is a mechanical latch device that is opened by the weight of the fuel assembly container when in the horizontal position.

5. Lifting Arm - Refueling Machine

The refueling canal lifting arm is interlocked with the refueling machine. Whenever the transfer car is located in the refueling canal, the lifting arm cannot be operated unless the refueling machine mast is in the fully retracted position or the refueling machine is over the core.

The circuits which interlock the refueling canal lifting arm with the refueling machine are redundant.

6. Lifting Arm - Fuel Handling Machine

   The lifting arm is interlocked with the fuel handling machine. The lifting arm cannot be operated unless the fuel handling machine is not over the lifting arm area. The interlocks are redundant.

7. Additional protective devices designed into the Raytheon modification:

   1) Load sensitive bases which open circuits if an underloaded or overload torque is sensed on the car.

   2) Overcurrent protection on the winch motors. 99-065

   3) Overtravel programmed limits to backup primary limits in case of failures. Additionally, hard stops are provided to create overtorque in case limit controls fail.

9.1.4.3.1.5 Fuel Handling Machine

The fuel handling machine includes the following safety features.

1. The fuel handling machine controls are interlocked to prevent simultaneous operation of the bridge drive and hoist.

2. Bridge drive operation in the normal 2 speeds is permitted only when the hoist is in the full up position. The bridge can be jogged in increments of less than one inch, at low speed, in timed intervals when the hoist is in other than the full up position.

3. An overload protection device is included on the hoist to limit the uplift force which could be applied to the fuel storage racks. The protection device limits the hoist load to 125 percent of the rated hoist capacity.

4. The design load on the hoist is the weight of one fuel assembly (1600 lbs), the weight of one failed fuel container (1000 lbs), and the weight of the tool which gives it a total weight of approximately 3000 lbs.

5. Restraining bars are provided on each truck to prevent the bridge from overturning.

9.1.4.3.1.6 Fuel Handling Tools and Equipment

All fuel handling tools and equipment handled over an open reactor vessel are designed to prevent inadvertent decoupling from machine hooks (i.e., lifting rigs are pinned to the machine hook and safety latches are provided on hooks supporting tools).

Tools required for handling internal reactor components are designed with fail safe features that prevent disengagement of the component in the event of an operating mechanism malfunction. These safety features apply to the following tools.

1. Control rod drive shaft unlatching tool: The air cylinders actuating the gripper mechanism are equipped with backup springs which close the gripper in the event of loss of air to the cylinder. Air operated valves are equipped with safety locking rings to prevent inadvertent actuation.

2. Spent fuel assembly handling tool: When the fingers are latched a pin is inserted into the operating handle and prevents inadvertent actuation. The tool weighs approximately 385 pounds and is preoperationally tested at 125 percent the weight of one fuel assembly (1600 lbs).

3. New fuel assembly handling fixture: When the fingers are latched a safety screw is screwed in preventing inadvertent actuations. The tool weighs approximately 100 pounds and is preoperationally tested at 125 percent the weight of one fuel assembly (1600 lbs).

9.1.4.3.1.7 Polar Crane

The reactor building polar crane is safety-related and is designed to Seismic Category 1 requirements. This crane is equipped with two completely independent and automatically operated brake systems. Each brake system is capable of stopping the rated crane load at any speed up to 150 percent of the rated speed.

9.1.4.3.1.8 Fuel Handling Building Crane

The fuel handling building crane is safety-related and is designed to Seismic Category 1 requirements. This crane is equipped with two completely independent and automatically operated brake systems. Each brake system has a minimum capacity of 125 percent of that required to hold the design rated loads. The fuel handling building crane rail installation allows operation over the cask loading pit, decontamination and new fuel storage area, but excludes operation over the spent fuel pool. Structural stops are provided at each end of the rails. RN 11-041

9.1.4.3.2 Seismic Considerations

The safety classifications for all fuel handling and storage equipment are listed in Table 3.2-1. These safety classes provide criteria for the seismic design of the various components. Safety Class 1 and 2a equipment is designed to withstand the forces of the OBE and SSE. For normal conditions plus OBE loadings, the resulting stresses are limited to allowable working stresses as defined in the ASME Code, Section III, Appendix XVII, Subarticle XVII-2200 for normal and upset conditions. For normal conditions plus SSE loadings, the stresses are limited to within the allowable values given by Subarticle XVII-2110 for critical parts of the equipment which are required to maintain the capability of the equipment to perform its safety function. Permanent deformation is allowed for the loading combination which includes the SSE to the extent that there is no loss of safety function.

The Safety Class 2b and 3 fuel handling and storage equipment satisfies the Safety Class 1 and 2a criteria given above for the SSE. Consideration is given to the OBE only in so far as failure of the Safety Class 2b and 3 equipment might adversely affect Safety Class 1 or 2a equipment.

For Non-Nuclear Safety equipment, design for the SSE is considered if failure might adversely affect a Safety Class 1, 2a, 2b, or 3 component.

Design for the OBE is considered if failure of the Non-Nuclear Safety component might adversely affect a Safety Class 1 or 2a component.

9.1.4.3.3 Containment Pressure Boundary Integrity

The fuel transfer tube which connects the refueling canal (inside the reactor building) and the fuel transfer canal (outside the reactor building) is closed on the refueling canal side by a blind flange at all times except during refueling operations. Two seals are located around the periphery of the blind flange with leak-check provisions between them.

9.1.4.3.4 Radiation Shielding

During all phases of spent fuel transfer, the gamma dose rate at the surface of the water is 2.5 mr/hr or less. This is accomplished by maintaining the spent fuel pool level at the normal elevation of 461’-6", thus providing a nominal 10 feet of water shielding above the active fuel assembly during all handling operations. 98-056 RN 03-017

The two fuel handling devices used to lift spent fuel assemblies are the refueling machine and the fuel handling machine. The refueling machine contains positive stops which prevent the top of a fuel assembly from being raised to within a nominal 10 feet of the normal water level in the refueling cavity. The hoist on the fuel handling machine moves spent fuel assemblies with a long handled tool. Hoist travel and tool length likewise limit the maximum lift of a fuel assembly to within a nominal 10 feet of the normal water level in the spent fuel pool.

RN 03-017

RN 03-017

9.1.4.3.5 Spent Fuel Shipping Cask Handling

The spent fuel shipping cask is designed to withstand a drop, in air, of 30 feet without release of the solid contents of the cask. Restrictive administrative procedures are followed during cask handling operations to minimize cask impact loadings in the event of a cask drop. The only area where the drop height exceeds 30 feet is above the cask loading pit. However, as discussed in Section 9.1.3.3, a cask drop into the flooded cask loading pit does not violate the 30 foot drop criteria since the calculated impact velocity of the cask at the floor of the cask loading pit is less than 44 ft/sec. The velocity of 44 ft/sec is the impact velocity generated by a 30 foot cask drop in air onto an unyielding surface. Water level in the cask loading pit is continuously controlled whenever the cask is placed in or removed from the pit. Therefore, for a cask drop into the flooded cask loading pit, there is no release of the solid contents of the cask.

To minimize the consequences of a cask drop, the cask is moved at a height of 1 foot above the operating floor by the fuel handling building crane. Handling of the cask in the plant proper is performed with the bottom impact limiter removed from the cask.

Since handling of the cask in the plant does not violate the 30 foot drop criterion, cask integrity is maintained and there is no release of the contents of the cask. Therefore, a design basis analysis of the radiological consequences of a spent fuel cask drop accident is not required.

The area of fuel handling building crane coverage precludes damage to safety-related equipment should a cask drop occur. There are no safety related systems or components located under the travel path of the fuel transfer cask. In addition, cask handling in this limited area will not violate the 30 foot drop criteria.

9.1.4.4 Tests and Inspections

As part of normal plant operations, the fuel handling equipment is inspected for operating conditions prior to each refueling operation. During the operational testing of this equipment, procedures are followed that will affirm the correct performance of the FHS interlocks.

9.1.5 SPENT FUEL DRY CASK STORAGE

9.1.5.1 System Description

The Virgil C. Summer Nuclear Station (VCSNS) has established an Independent Spent Fuel Storage Installation (ISFSI) located approximately 500 feet west of the Unit 1 Fuel Handling Building (FHB) and northeast of warehouses A and B in the plant Protected Area as shown on Figure 1.2-1. The ISFSI concrete pad has a capacity for 98 vertical spent fuel storage casks.

Spent Fuel Dry Cask Storage operations at the VCSNS are conducted under a general license in accordance with Subpart K of 10 CFR Part 72. The general license issued by 10 CFR 72.210 authorizes a 10 CFR Part 50 nuclear power plant licensee to store spent fuel at an onsite ISFSI. Subpart K of 10 CFR Part 72 also includes 10 CFR 72.212, “Conditions of general license issued under §72.210,” which requires the use of a dry cask storage system that is pre-approved by the Nuclear Regulatory Commission, as evidenced by its listing in 10 CFR 72.214.

The VCSNS ISFSI uses the Holtec HI-STORM Flood and Wind (FW) vertical cask storage overpack, the Holtec MPC-37 multi-purpose canister (MPC), and the HI-TRAC Variable Weight (VW) transfer cask as described in the HI-STORM FW MPC Storage System FSAR and approved by the Nuclear Regulatory Commission in HI-STORM FW Certificate of Compliance No. 1032, which includes the Technical Specifications for the HI-STORM FW MPC Storage System. RN 13-018

The MPC provides the confinement boundary for the stored fuel. The MPC is a welded, cylindrical canister with a honeycombed cell fuel basket to contain the spent fuel assemblies. All MPC confinement boundary components are made entirely of stainless steel. The honeycombed cell fuel basket construction includes the neutron absorbing material that provides criticality control. The MPC also provides axial shielding at the top and bottom ends.

The HI-STORM FW storage overpack provides additional radiation shielding and structural protection of the MPC during storage. The HI-STORM FW overpack design includes a lid which incorporates the air outlet duct. The overpack is a heavy-walled steel and concrete, cylindrical vessel whose side wall consists of non-reinforced concrete enclosed between inner and outer carbon steel shells. The carbon steel shells are coated on the exposed surfaces for corrosion protection. The overpack has eight air inlets at the bottom and a near 360 degree (excluding the support plates) air outlet at the top to allow air to circulate naturally through the cavity to cool the MPC inside. The inner shell has guide tubes attached to its interior surface to guide the MPC during insertion and removal and allow cooling air to circulate through the overpack.

The HI-TRAC VW is a metal transfer cask that provides a means to lift and handle the MPC. The Hi-TRAC VW provides shielding of the spent fuel assemblies in the MPC and structural protection of the MPC during loading, unloading, and movement of the MPC from the cask loading area to the storage overpack. The HI-TRAC VW is a multi-walled (carbon steel/lead/carbon steel) cylindrical vessel which utilizes a neutron shielding water jacket and a removable bottom lid used during MPC transfer operations.

9.1.5.2 Operations in the Fuel Handling Building

Loading the MPC-37 canisters with spent fuel assemblies takes place in the FHB. An empty MPC-37 canister is brought into the FHB rail bay in a HI-STORM FW overpack situated on top of a Low Profile Transporter (LPT). The empty MPC is loaded into the HI-TRAC VW transfer cask that is supported in the decontamination area by a Cask Support Pedestal. The HI-TRAC VW containing the empty MPC is lifted by the FHB single-failure-proof overhead crane, using a HI-TRAC lift yoke, from the decontamination area and placed in the cask loading pit of the spent fuel pool for spent fuel loading operations. A Variable Elevation Cask Staging Pedestal (VECASP) assembly is located on the floor of the cask loading pit. Using the lift yoke and a lift yoke extension, the HI-TRAC VW containing the empty MPC is moved to the lower position inside the VECASP in the cask loading pit. RN 13-018

The MPC is then loaded with spent fuel assemblies utilizing the fuel handling machine. The HI-TRAC VW and loaded MPC are transferred by the FHB crane to the stainless steel lined decontamination area, where the MPC is decontaminated, welded shut, drained, dried, and backfilled with helium. The HI-TRAC VW containing the MPC is then lifted and placed on top of the HI-STORM FW overpack inside the FHB rail bay so that the MPC can be transferred from the HI-TRAC to the HI-STORM. After the MPC has been placed in the HI-STORM, the loaded HI-STORM is transported out of the FHB on the LPT, where the loaded HI-STORM is lifted from the LPT by a vertical cask transporter (VCT), moved along the haul path by the VCT to the ISFSI pad, and placed in its storage location.

Critical load handling operations in the FHB associated with dry cask loading or unloading activities are conducted using single-failure-proof handling systems, which include the main hoist on the FHB overhead crane and lifting devices meeting the enhanced safety factors of ANSI N14.6 or ASME B30.9. These lifting devices and other cask handling system components meet the applicable requirements of ANSI N14.6, NUREG-0554, and applicable guidelines of NUREG-0612 per the VCSNS heavy loads program described in FSAR Section 3.12.

9.1.6 REFERENCES

RN 13-018

1. Taylor, G. J., “Virgil C. Summer Nuclear Station (VCSNS), Docket No. 50/395, Operating License No, NPF-12, Exemption from the Requirements of 10 CFR 70.24,” RC-97-0128, July 17, 1997.

2. Taylor, G. J., “Virgil C. Summer Nuclear Station (VCSNS), Docket No. 50/395, Operating License No, NPF-12, Exemption from the Requirements of 10 CFR 70.24 Supplement 1,” RC-97-0162, August 6, 1997.

3. Johnson, A. R. (NRC) to Taylor, G. J. (SCE&G), “Issuance of Exemption from the Requirements of 10 CFR 70.24 Virgil C. Summer Nuclear Station – (TAC NO. M99278),” September 9, 1997.

4. Final Safety Analysis Report for the HI-STORM FW MPC Storage System, Holtec Report HI-2114830, Docket 72-1032.

5. 10 CFR 72 Certificate of Compliance No. 1032, HI-STORM FW MPC Storage System, Effective Date June 13, 2011; including Appendix A - Technical Specifications for the HI-STORM FW MPC Storage System, and Appendix B - Approved Contents and Design Features for the HI-STORM FW MPC Storage System.

RN 13-028

RN 13-018

TABLE 9.1-1

SPENT FUEL COOLING SYSTEM COMPONENT DATA

Spent Fuel Cooling Pump and Spent Fuel Cooling and Transfer Pump		
Type	Centrifugal, electric motor driven, horizontal shaft	
Safety Class	2b	
Code	ASME Code, Section III, Class 3	02-01
Materials of Wetted Parts	Austenitic stainless seal	
Seal Type	Mechanical Seal	
Motor, hp	75	
Power Supply	460V, 3 phase, 60Hz	
Design Flow, gpm	1800	02-01
Design Head (TDH), ft	100	
Connections	Flanged: 8 inch Discharge 10 inch Suction	
Operating Speed, rpm	1750	
Spent Fuel Heat Exchangers		
Quantity	2	
Type	U-Tube	
Material of Wetted Parts	Tube: Austenitic stainless steel Shell: Carbon steel	
Heat Transfer Rate (Per Cooler)		
Normal (original), BTU/hr	14.02×10^6	
Peak (original), BTU/hr	19.23×10^6	
Partial Offload (Uprate)	20.71×10^6	RN 03-017
Full Core Offload (Uprate)	40.74×10^6 (85°F shell side inlet) 31.16×10^6 (105°F shell side inlet)	
Abnormal Offload (Uprate)	38.84×10^6	

Inlet temperature	Shell Side	Tube Side	
Normal (original),°F	105	135	
Peak (original), °F	105	146	02-01
Partial Offload (Uprate) °F	105	150	
Full Core Offload (Uprate) °F	105	186	
Abnormal Offload (Uprate) °F	105	200	
Flow Rate, lb/hr	8.9×10^5	8.9×10^5	
Pressure Drop, Total, psi	< 15	< 10	
Design Pressure, psig	150	150	
Design Temperature, °F	250	250	
Safety Class	2b	2b	
Design Code	ASME Code, Section III, Class 3	ASME Code, Section III, Class 3	

TABLE 9.1-1 (Continued)

SPENT FUEL COOLING SYSTEM COMPONENT DATA

Spent Fuel Purification Pump

Type	Centrifugal, electric motor driven, vertical shaft	
Materials of Wetted Parts	Austenitic stainless steel	
Seal Type	Packing gland	
Motor, hp	75	
Power Supply	460V, 3 phase, 60 Hz	
Design Flow, gpm	180	
Design Head, ft	200	
Connections	Flanged, 4” suction, 3” discharge	
Safety Class	NNS	

Spent Fuel Cooling Demineralizer

Purification Media	Anion and/or cation exchange resins as required	
Operating temp, max. °F	140	
Flow, gpm	180	
Safety Class	NNS	02-01

Spent Fuel Purification Filters

Quantity	2	
Type	Removable cartridge	
Removal Rating, microns abs.	≤ 30	
Flow, gpm, each	180	
Safety Class	NNS	

Refueling Water Storage Tank

Type	Cylindrical, vertical	
Normal Operating Capacity		
Minimum Contained Volume, gal	453,800	98-01
Maximum Contained Volume, gal	514,665	
Material	Stainless steel	
Design Pressure, psig	+3, -0.5	
Safety Class	2a	

TABLE 9.1-2

SPENT FUEL STORAGE RACKS - DESIGN DATA

Region	Cell Pitch (nominal)	B_{10} Loading (nominal)	Flux Trap Gap (nominal)
1	10.867 in.	0.0324 gm/cm^2	1.6 in.
2	9.070 in.	0.0324 gm/cm^2	0.0 in.

RN 03-017

TABLE 9.1-3

SPENT FUEL STORAGE RACKS - MODULE DATA

Region No.	Module Type	Quantity	Cells per module	Array Size	Approximate Weight (lb/module)	
						02-01
1	C	1	100	10 x 10	25300	
1	C	1	100	10 x 10	24900	
2	A	4	156	13 x 12	23300	RN 03-017
2	A	2	156	13 x 12	22800	
2	B	2	144	12 x 12	21600	
2	B	2	144	12 x 12	21200	

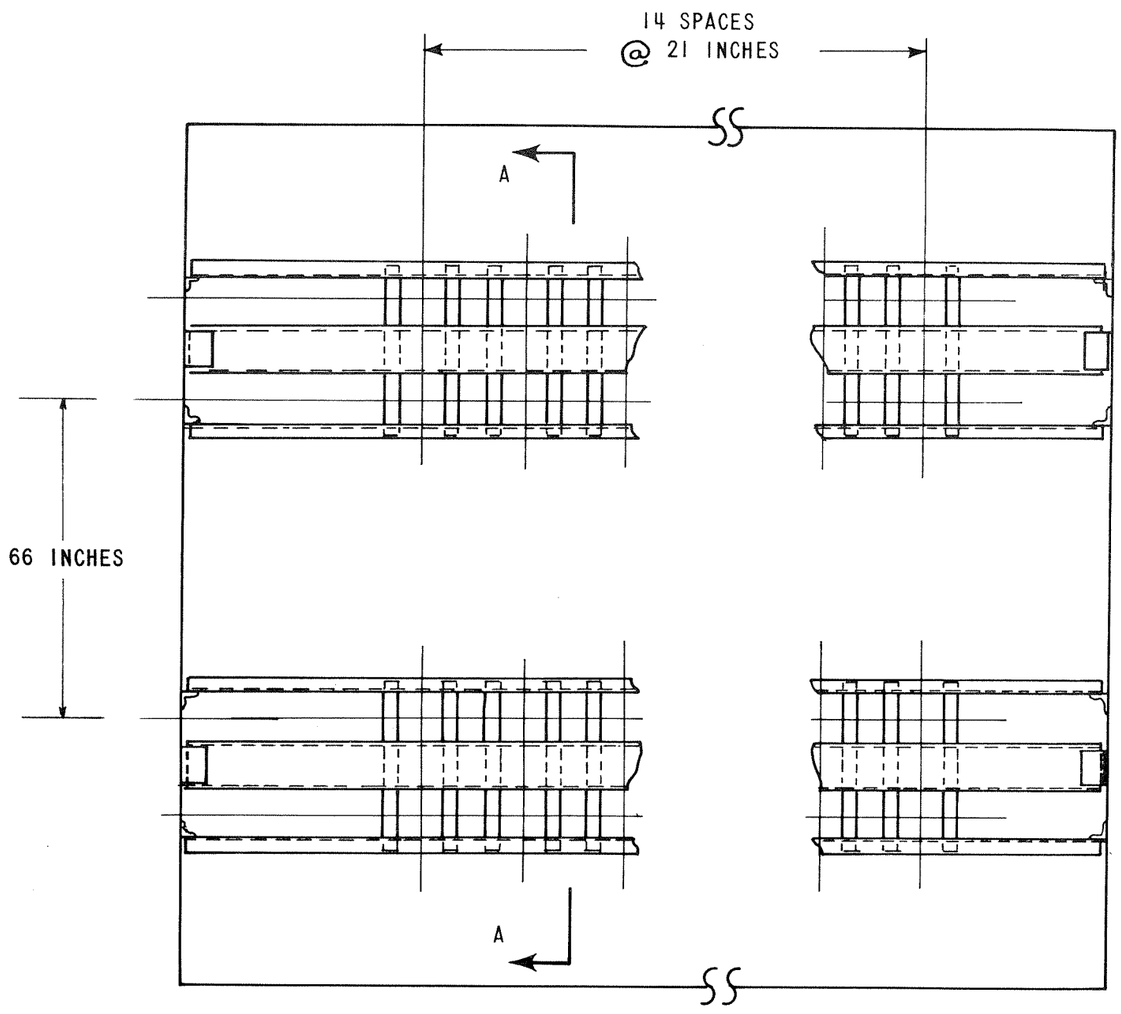

PLAN VIEW

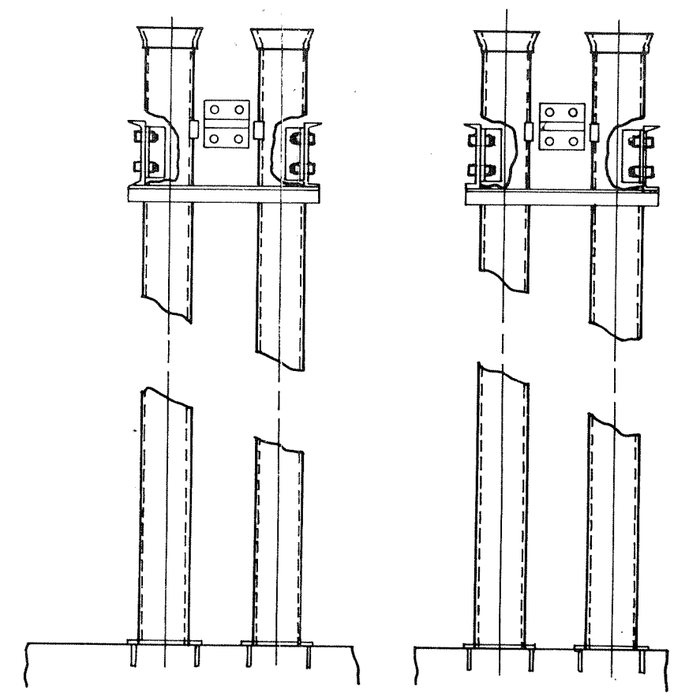

SECTION A-A

AMENDMENT 2
AUGUST, 1986

SOUTH CAROLINA ELECTRIC & GAS CO. VIRGIL C. SUMMER NUCLEAR STATION
New Fuel Storage Rack Assembly Figure 9.1-1

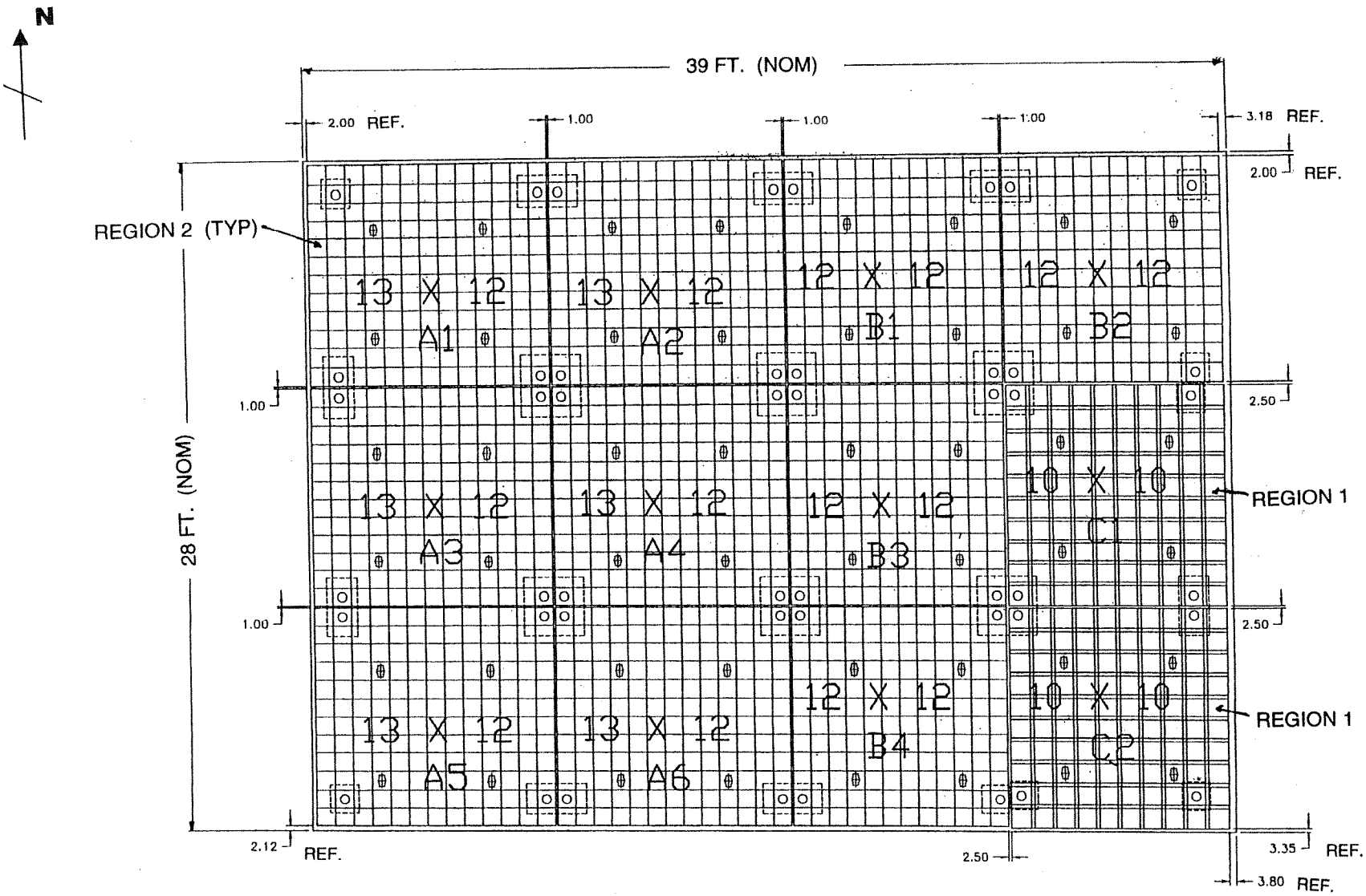

SPENT FUEL POOL RACK LAYOUT

NOTE: Clearance dimensions between racks are nominal design gaps in inches.

RN 03-017
December 2003

SOUTH CAROLINA ELECTRIC & GAS CO. VIRGIL C. SUMMER NUCLEAR STATION
Spent Fuel Storage Racks - Module Layout Figure 9.1-2

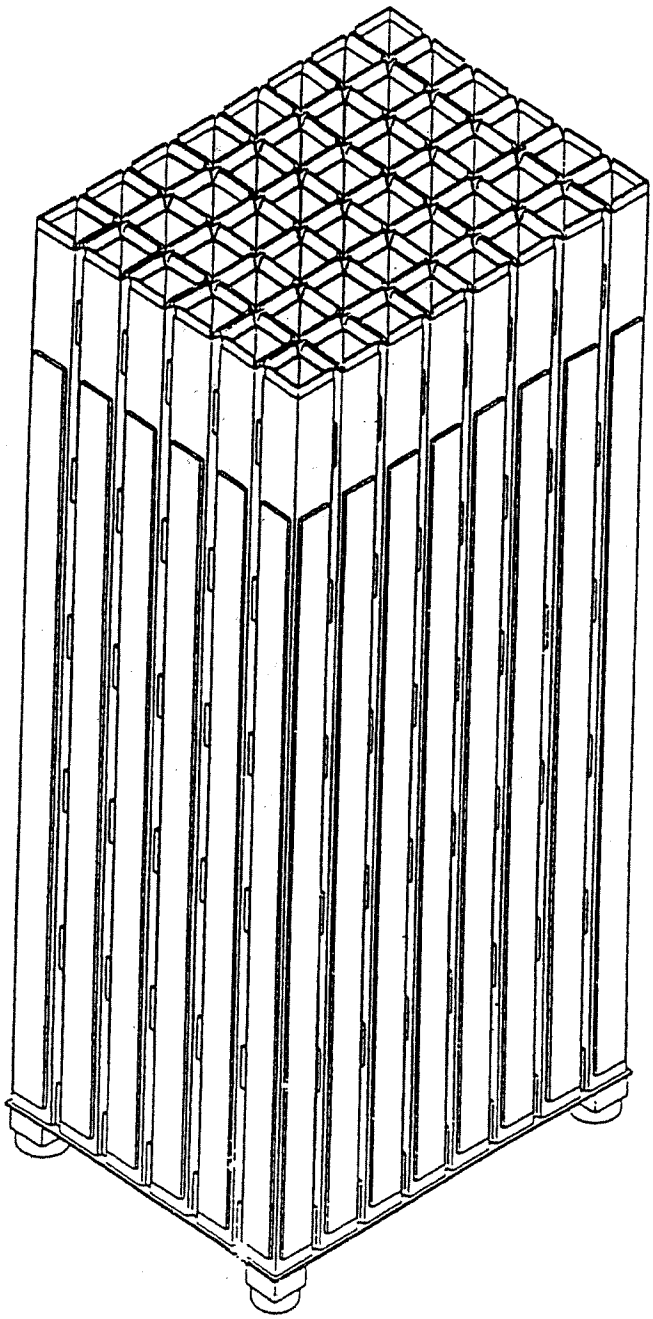

RN
03-017

RN 03-017
December 2003

SOUTH CAROLINA ELECTRIC & GAS CO
VIRGIL C. SUMMER NUCLEAR STATION

High Density Spent Fuel Storage Rack
Schematic View - Region 1 Rack Structure

Figure 9.1-2a

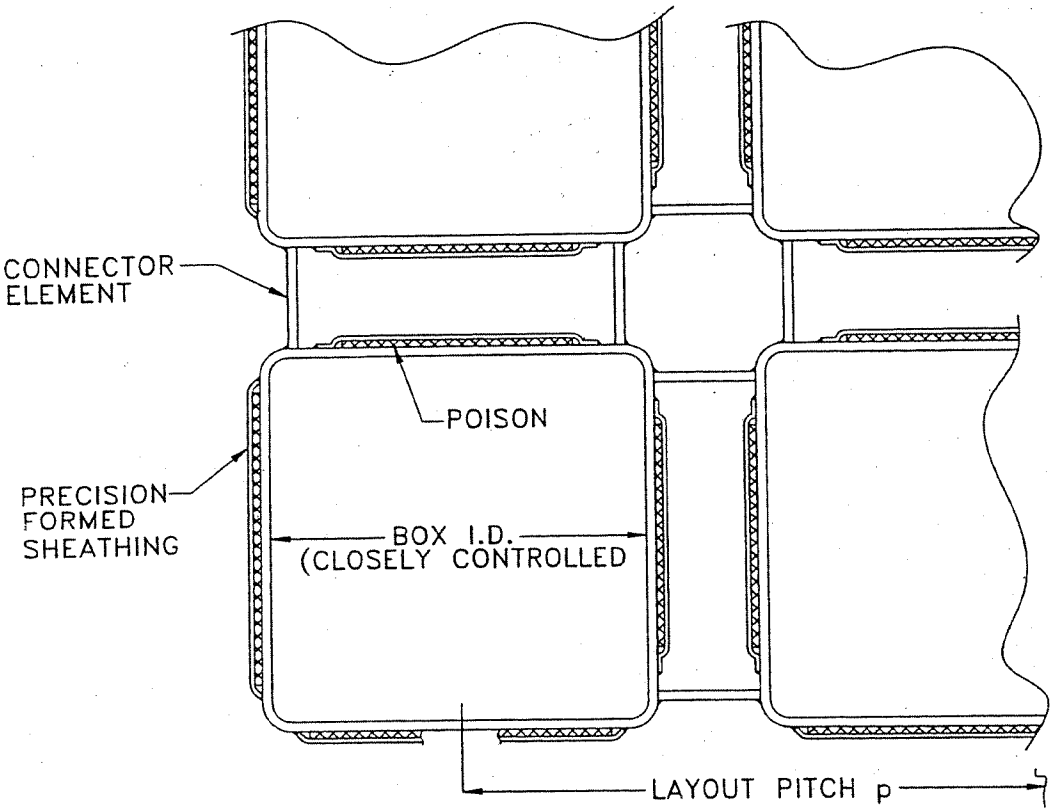

RN 03-017

RN 03-017
December 2003

SOUTH CAROLINA ELECTRIC & GAS CO VIRGIL C. SUMMER NUCLEAR STATION
High Density Spent Fuel Storage Rack Region 1 Storage Cell Assemblage Figure 9.1-2b

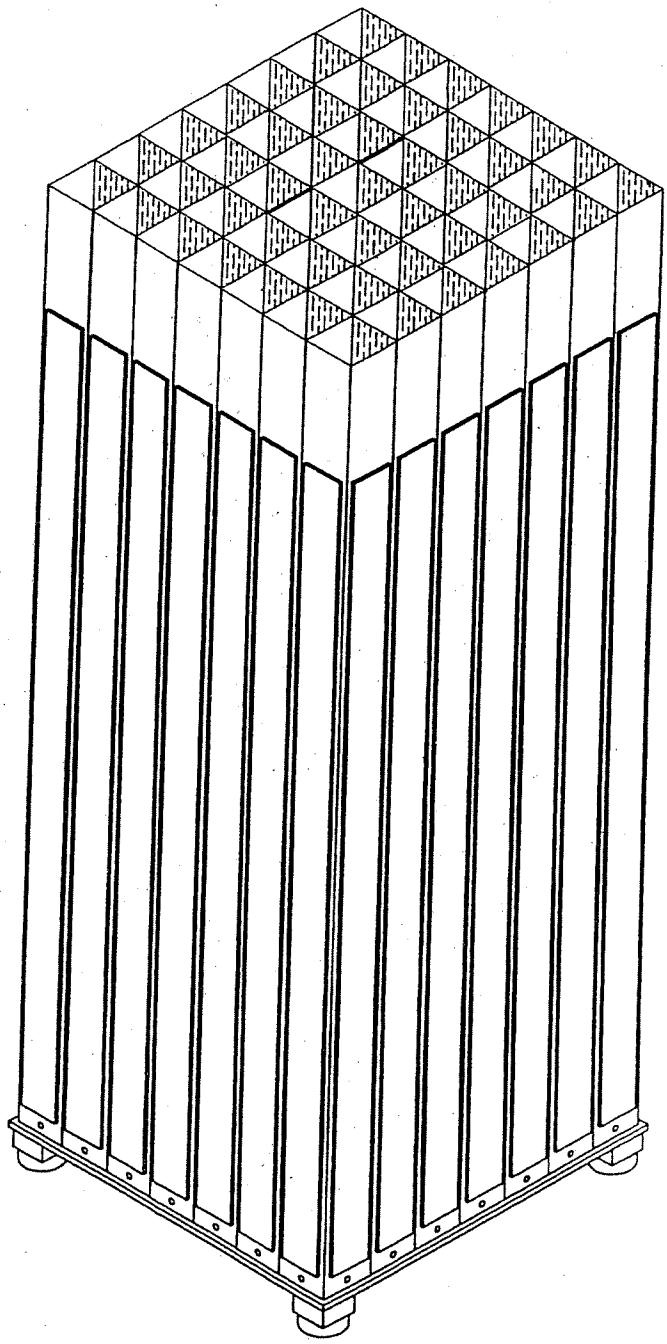

RN
03-017

RN 03-017
December 2003

SOUTH CAROLINA ELECTRIC & GAS CO
VIRGIL C. SUMMER NUCLEAR STATION

High Density Spent Fuel Storage Rack
Schematic View - Region 2 Rack Structure

Figure 9.1-2c

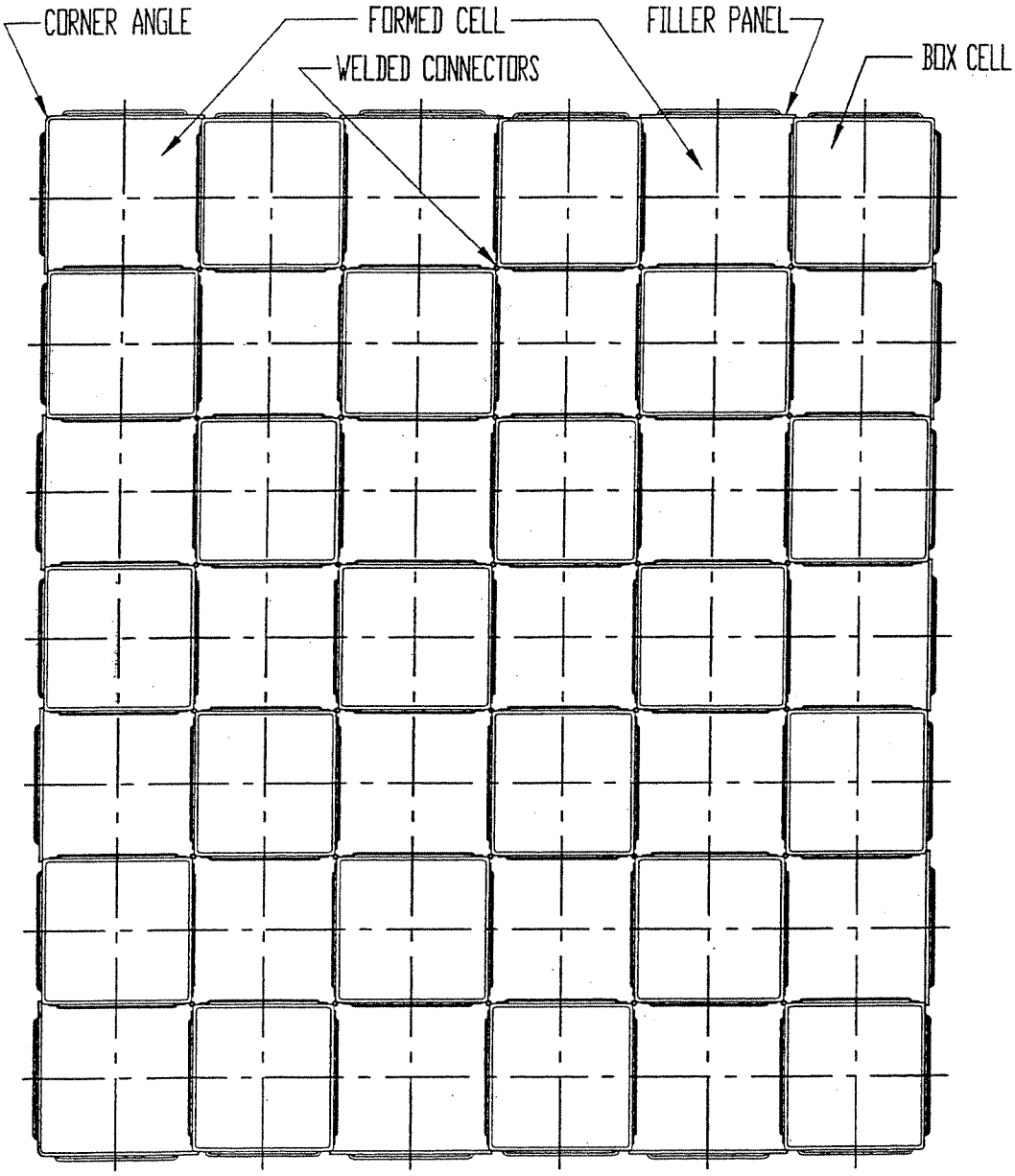

RN
03-017

RN 03-017
December 2003

SOUTH CAROLINA ELECTRIC & GAS CO
VIRGIL C. SUMMER NUCLEAR STATION

High Density Spent Fuel Storage Rack
Region 2 Storage Cell Assemblage

Figure 9.1-2d

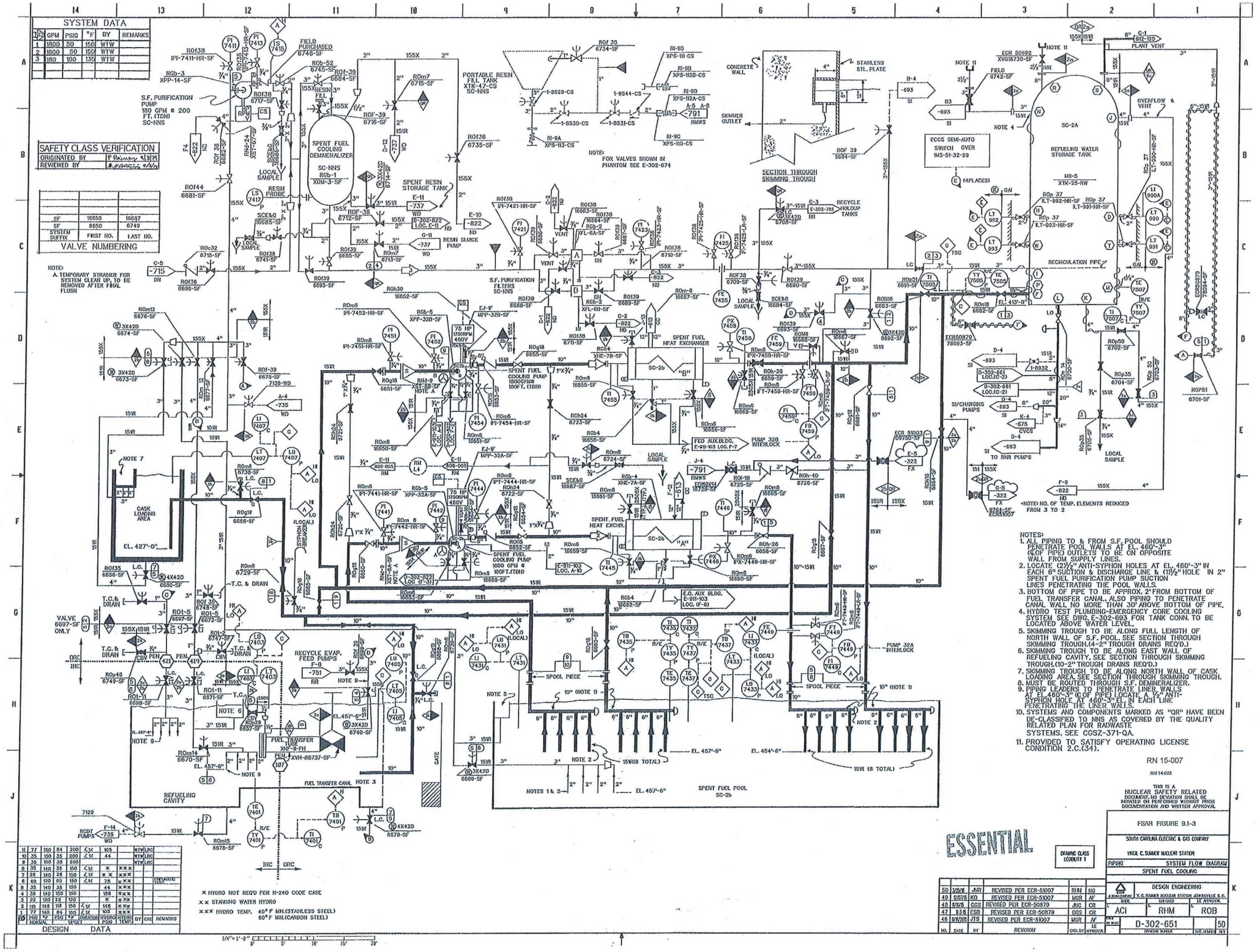

NOTES:
1. ALL PIPING TO & FROM S.F. POOL SHOULD PENETRATE POOL WALLS AT EL. 460'-3" (℄OF PIPE) OUTLETS TO BE ON OPPOSITE WALL FROM SUPPLY LINES.
2. LOCATE (2)½" ANTI-SYPHON HOLES AT EL. 460'-3" IN EACH 6" SUCTION & DISCHARGE LINE & (1)½" HOLE IN 2" SPENT FUEL PURIFICATION PUMP SUCTION LINES PENETRATING THE POOL WALLS.
3. BOTTOM OF PIPE TO BE APPROX. 2' FROM BOTTOM OF FUEL TRANSFER CANAL. ALSO PIPING TO PENETRATE CANAL WALL NO MORE THAN 30" ABOVE BOTTOM OF PIPE.
4. HYDRO TEST PLUMBING-EMERGENCY CORE COOLING SYSTEM SEE DWG. E-302-693 FOR TANK CONN. TO BE LOCATED ABOVE WATER LEVEL.
5. SKIMMING TROUGH TO BE ALONG FULL LENGTH OF NORTH WALL OF S.F. POOL. SEE SECTION THROUGH SKIMMING TROUGH.(4-2" TROUGH DRAINS REQ'D.)
6. SKIMMING TROUGH TO BE ALONG EAST WALL OF REFUELING CAVITY. SEE SECTION THROUGH SKIMMING TROUGH.(10-2" TROUGH DRAINS REQ'D.)
7. SKIMMING TROUGH TO BE ALONG NORTH WALL OF CASK LOADING AREA. SEE SECTION THROUGH SKIMMING TROUGH.
8. MUST BE ROUTED THROUGH S.F. DEMINERALIZER.
9. PIPING LEADERS TO PENETRATE LINER WALLS AT EL. 460'-3" (℄ OF PIPE) LOCATE A ½" ANTI-SYPHON HOLE AT 460'-3" EL. IN EACH LINE PENETRATING THE LINER WALLS.
10. SYSTEMS AND COMPONENTS MARKED AS "QR" HAVE BEEN DE-CLASSIFIED TO NNS AS COVERED BY THE QUALITY RELATED PLAN FOR RADWASTE SYSTEMS. SEE CGSZ-371-QA.
11. PROVIDED TO SATISFY OPERATING LICENSE CONDITION 2.C.(34).

RN 15-007

RN14022

THIS IS A NUCLEAR SAFETY RELATED DOCUMENT. NO DEVIATION SHALL BE INITIATED OR PERFORMED WITHOUT PRIOR DOCUMENTATION AND WRITTEN APPROVAL.

NO.	DATE	BY	REVISION	CKD. BY	APPROVAL
50	3/25/16	JMR	REVISED PER ECR-51007	RHM	NG
49	2/21/15	KG	REVISED PER ECR-51007	MGR	AF
48	8/14/15	CGS	REVISED PER ECR-50879	JNC	CR
47	1-3-8	ESG	REVISED PER ECR-50879	CGS	CH
46	1/4/2010	JTS	REVISED PER ECR-51007	MGR	AF

* HYDRO NOT REQ'D PER N-240 CODE CASE
** STANDING WATER HYDRO
*** HYDRO TEMP. 40° F MIN.(STAINLESS STEEL) 60° F MIN.(CARBON STEEL)

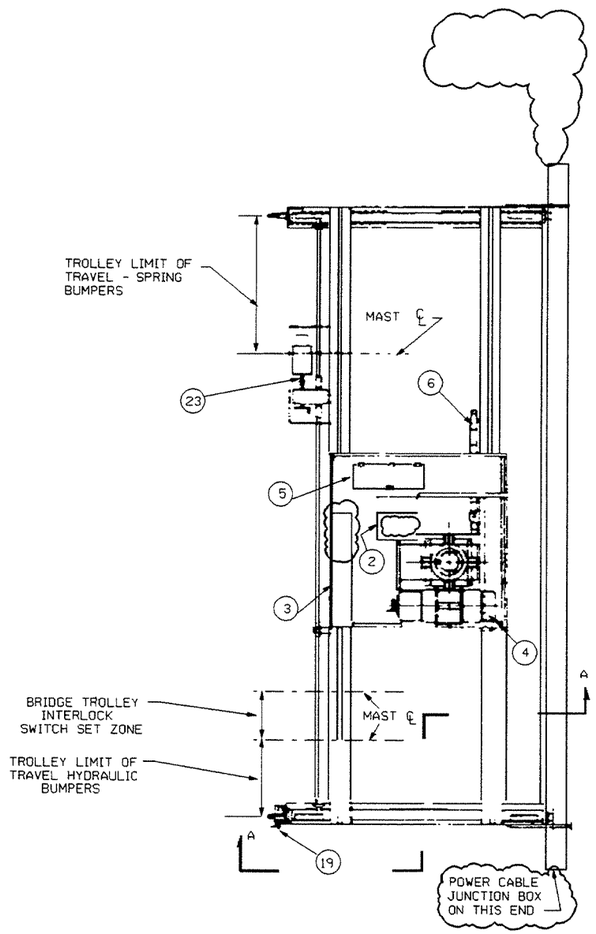

PLAN VIEW
(TOP OF SUPPORT STRUCTURE REMOVED FOR CLARITY)

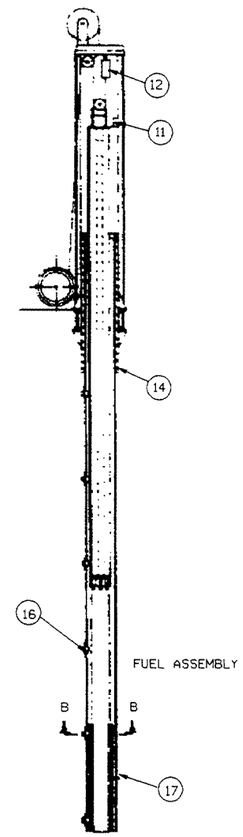

VIEW SHOWING GRIPPER TUBE ASSY. RETRACTED

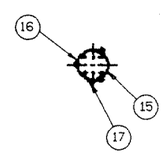

SECTION B - B

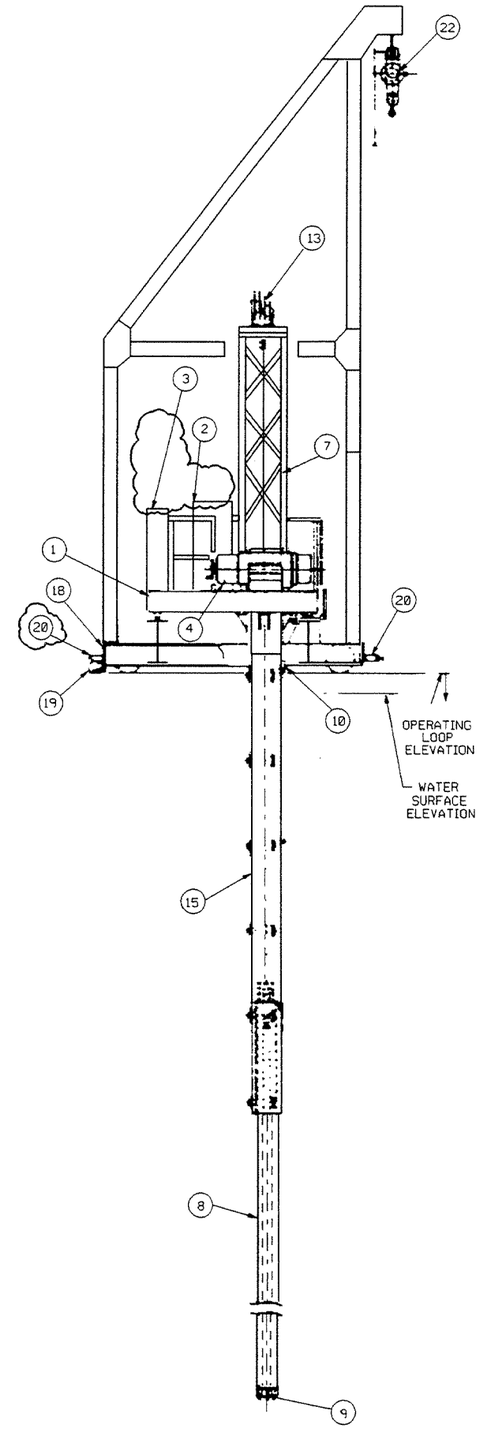

SECTION A - A

1. TROLLEY
2. CONTROL CONSOLE
3. MOTOR CONTROL CABINET
4. MAIN HOIST
5. TROLLEY DRIVE ACCESS HATCH
6. TROLLEY POSITION SCALE
7. SUPPORT STRUCTURE
8. GRIPPER TUBE
9. GRIPPER
10. GRIPPER TUBE DOWN POSITION SWITCH
11. GRIPPER TUBE UP POSITION SWITCH
12. LOAD CELL
13. AIR HOSE AND ELECTRIC CABLE REELS
14. MAST SUPPORT TUBE
15. OUTER MAST TUBE
16. GUIDE ROLLERS
17. FUEL ASSY. GUIDE BARS
18. BRIDGE
19. BRIDGE POSITION TRANSMITTER
20. HYDRAULIC BUMPER
22. MONORAIL HOIST
23. BRIDGE DRIVE

NOTE: THE MAST IS EQUIPPED WITH HARDWARE TO SUPPORT IN. MAST SIPPING - A FAILED FUEL DETECTION PROCESS.

SOUTH CAROLINA ELECTRIC & GAS CO.
VIRGIL C. SUMMER NUCLEAR STATION

REFUELING MACHINE

Figure 9.1-4 Rev. 0

fsar914.m(4297.dj14998) DJ14998@dj14998. Wed Oct 29 13:53:54 CST 1997

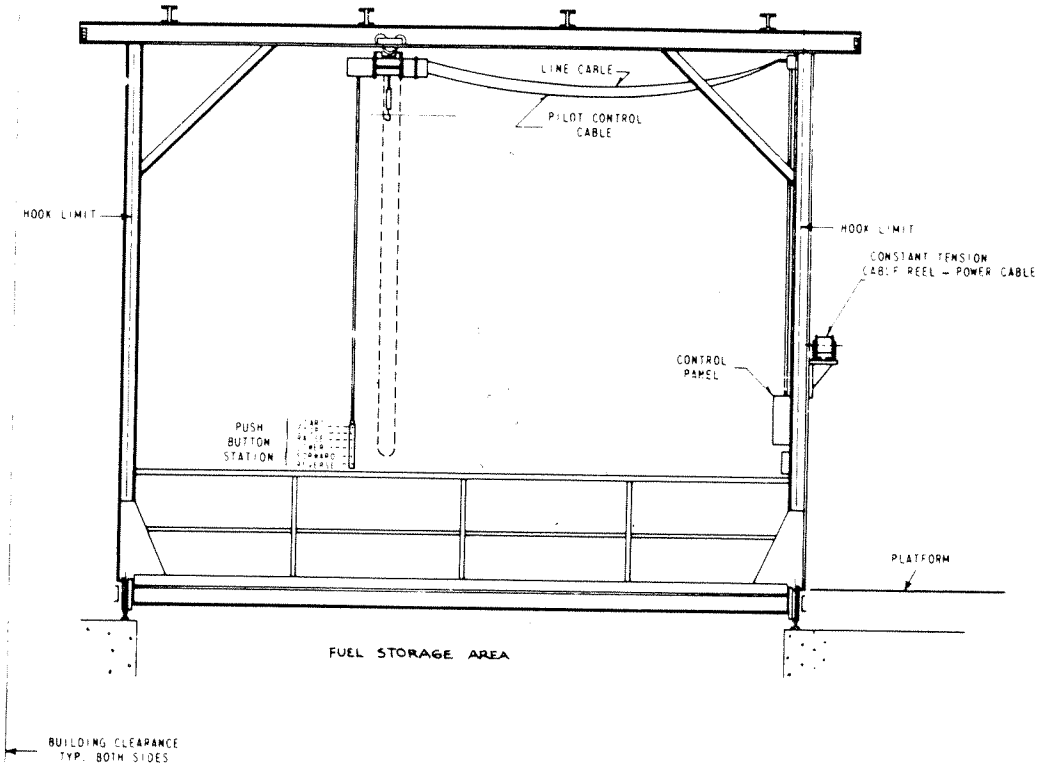

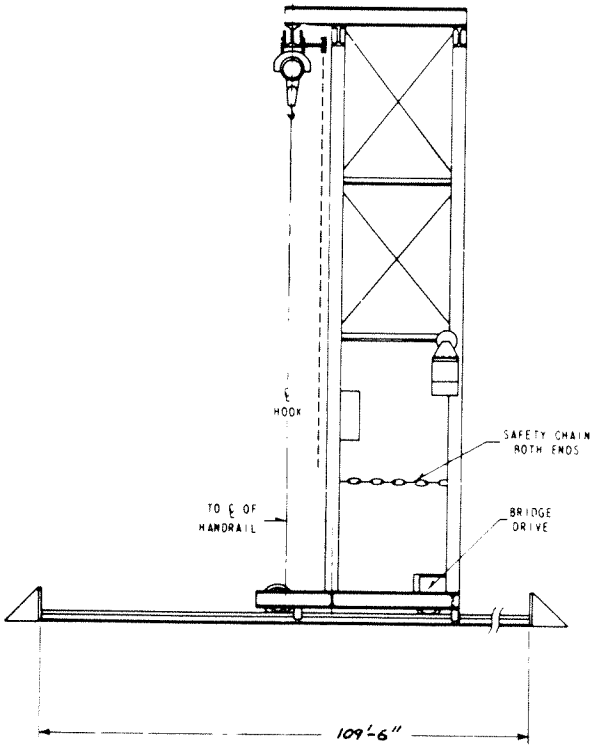

SOUTH CAROLINA ELECTRIC & GAS CO. VIRGIL C. SUMMER NUCLEAR STATION
Fuel Handling Machine Figure 9.1-5

Amendment 0
August 1984

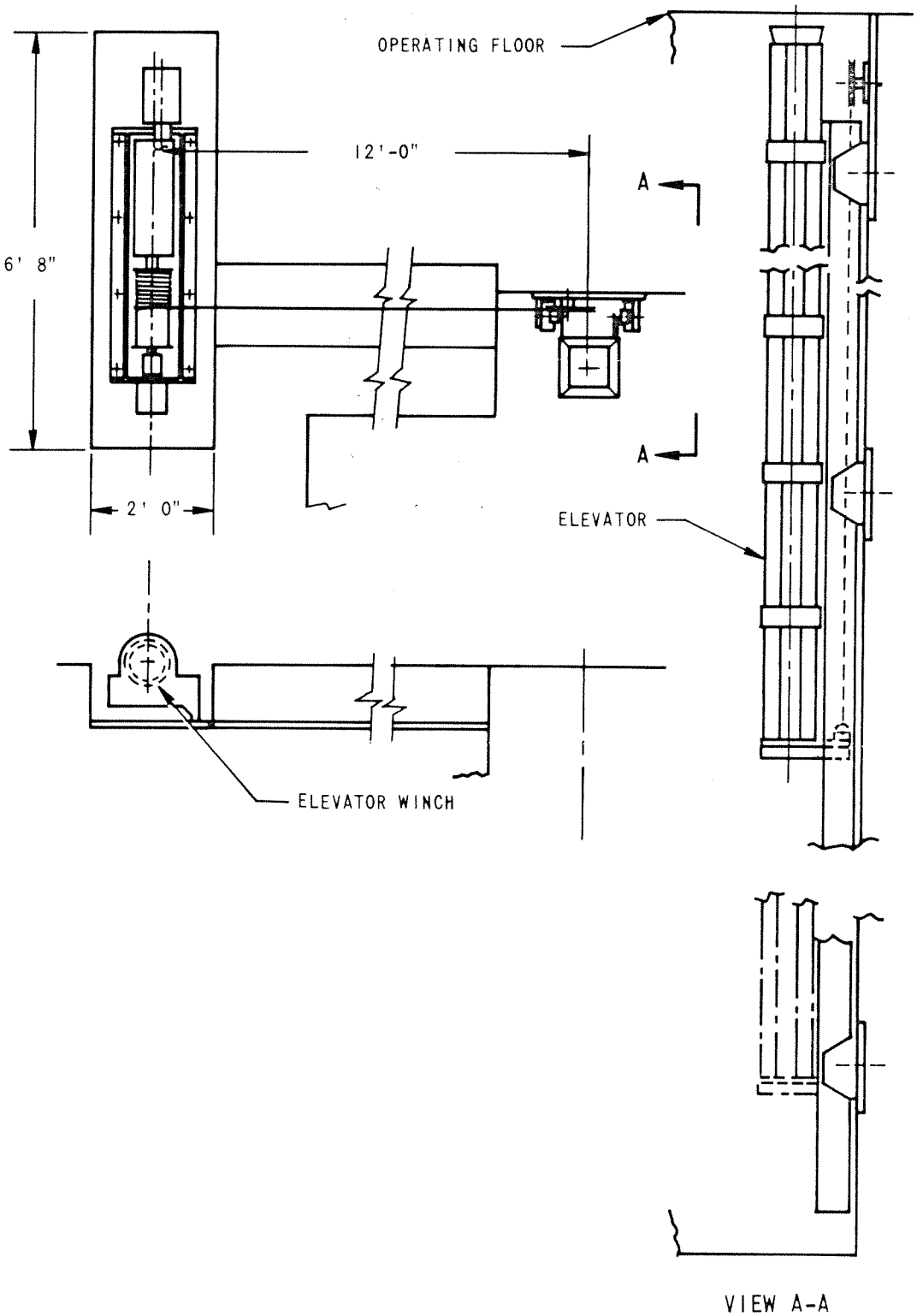

SOUTH CAROLINA ELECTRIC & GAS CO.
VIRGIL C. SUMMER NUCLEAR STATION

New Fuel
Elevator

Figure 9.1-6

Amendment 0
August 1984

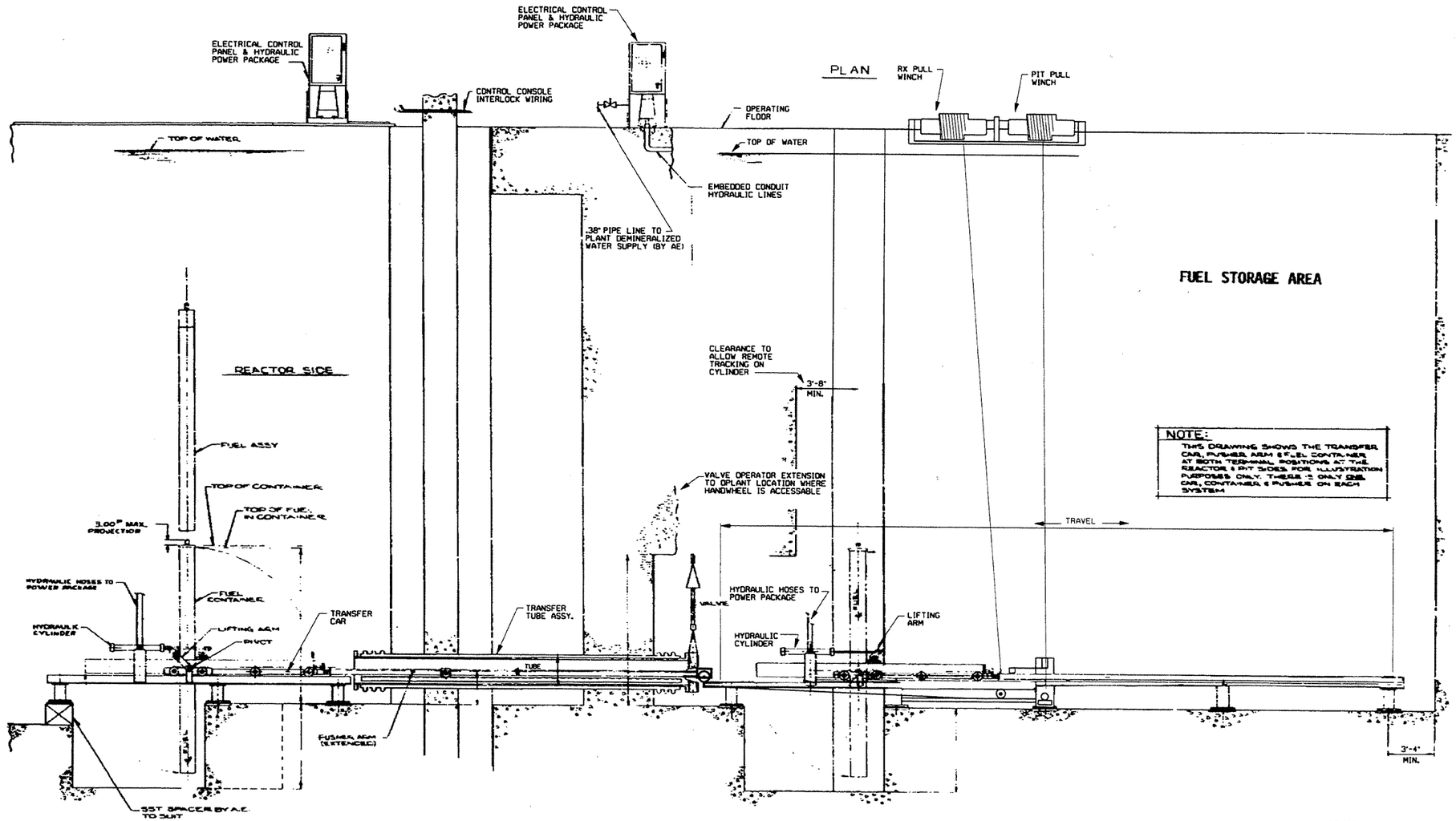

NOTE:
THIS DRAWING SHOWS THE TRANSFER CAR, PUSHER ARM & FUEL CONTAINER AT BOTH TERMINAL POSITIONS AT THE REACTOR & PIT SIDES FOR ILLUSTRATION PURPOSES ONLY. THERE IS ONLY ONE CAR, CONTAINER & PUSHER ON EACH SYSTEM

AMENDMENT 00-01
DECEMBER 2000

SOUTH CAROLINA ELECTRIC & GAS CO.
VIRGIL C. SUMMER NUCLEAR STATION

FUEL TRANSFER SYSTEM
REV. 0
Figure 9.1-7

...\ondeck\1890\fsar9.1-7.dgn Jun. 02, 1999 15:13:30

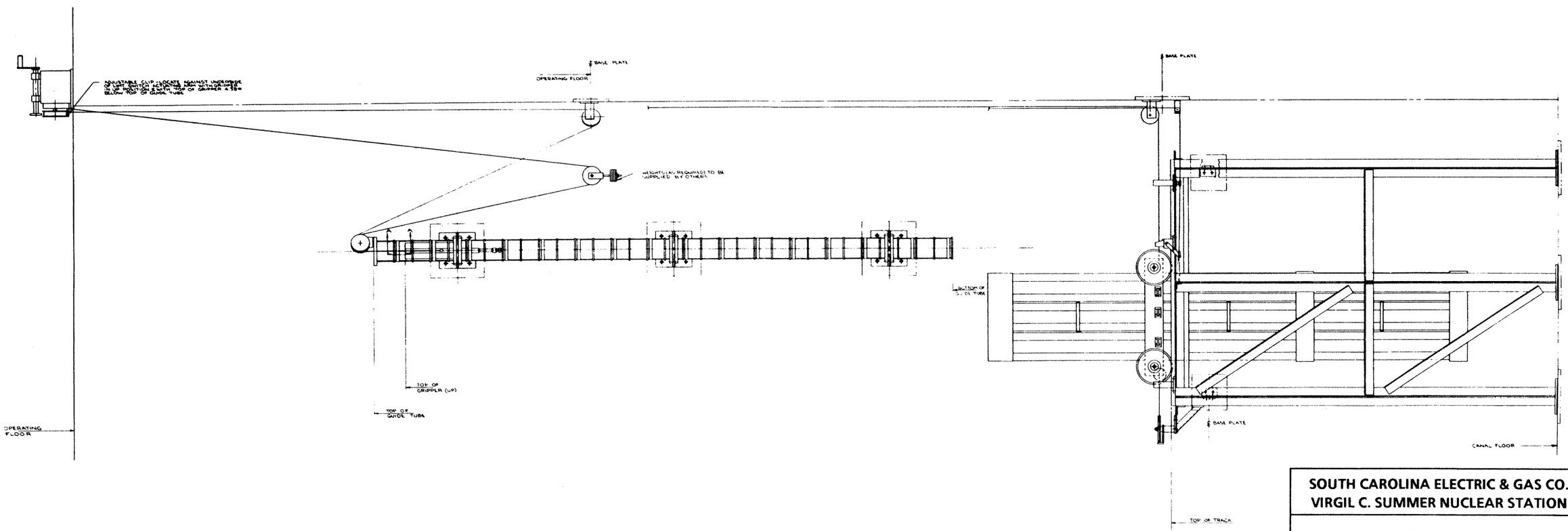

SOUTH CAROLINA ELECTRIC & GAS CO.
VIRGIL C. SUMMER NUCLEAR STATION

Rod Cluster Control Changing Fixture

Figure 9.1-8

Amendment 0
August 1984

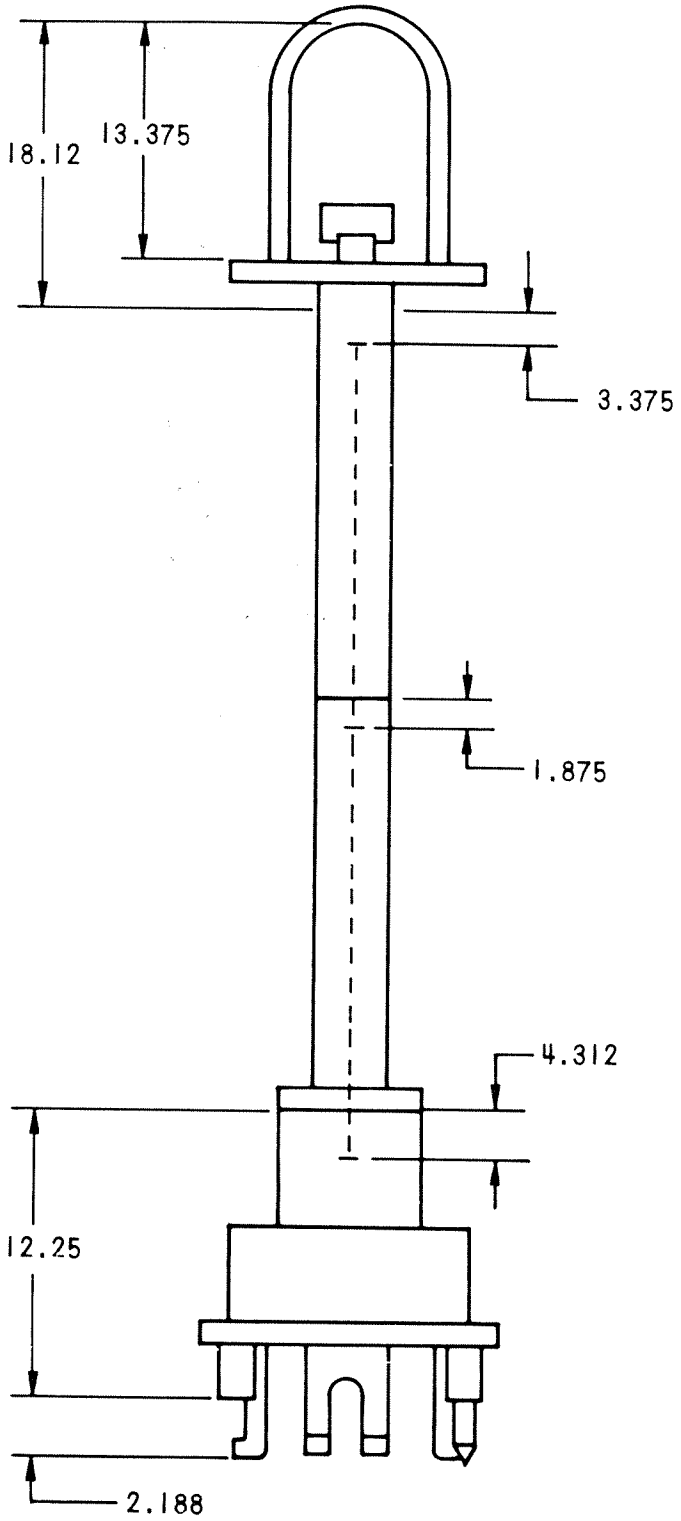

SOUTH CAROLINA ELECTRIC & GAS CO.
VIRGIL C. SUMMER NUCLEAR STATION

Spent Fuel Handling
Tool

Figure 9.1-9

Amendment 0
August 1984

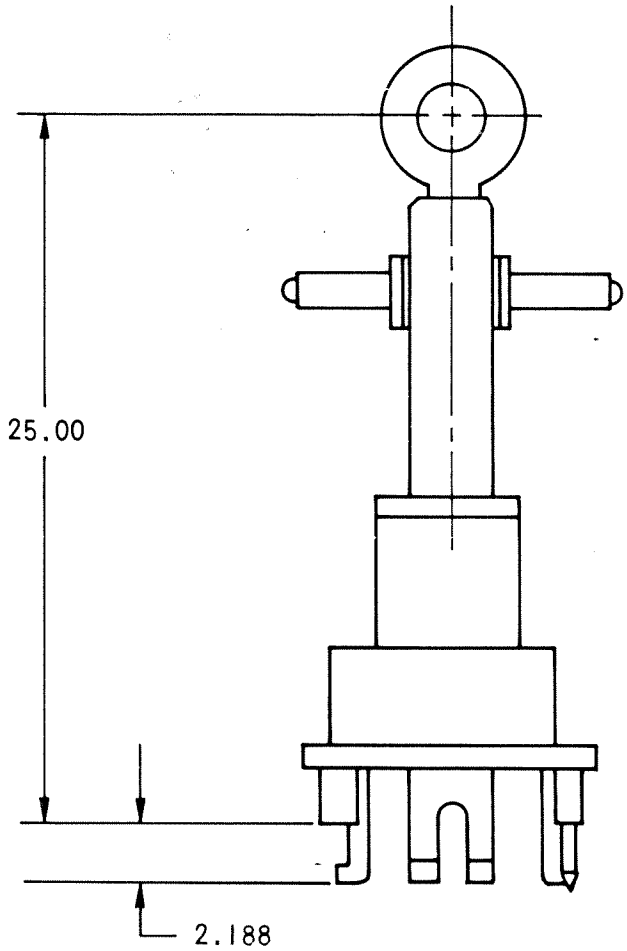

SOUTH CAROLINA ELECTRIC & GAS CO.
VIRGIL C. SUMMER NUCLEAR STATION

New Fuel Handling
Tool

Figure 9.1-10

Amendment 0
August 1984

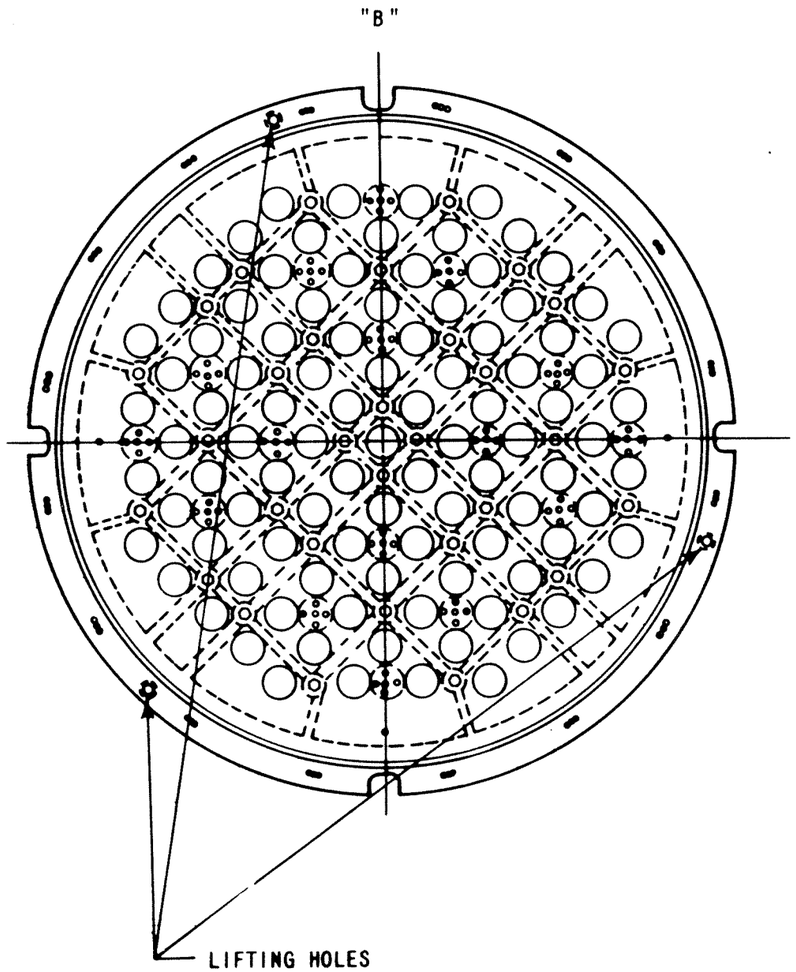

PLAN VIEW OF UPPER CORE SUPPORT STRUCTURE

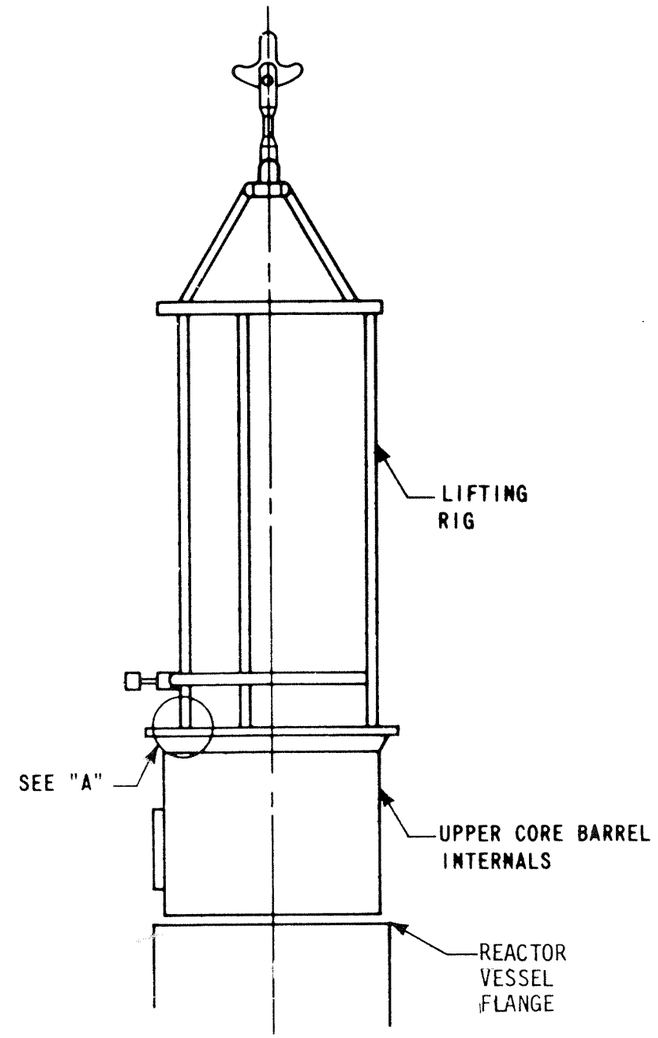

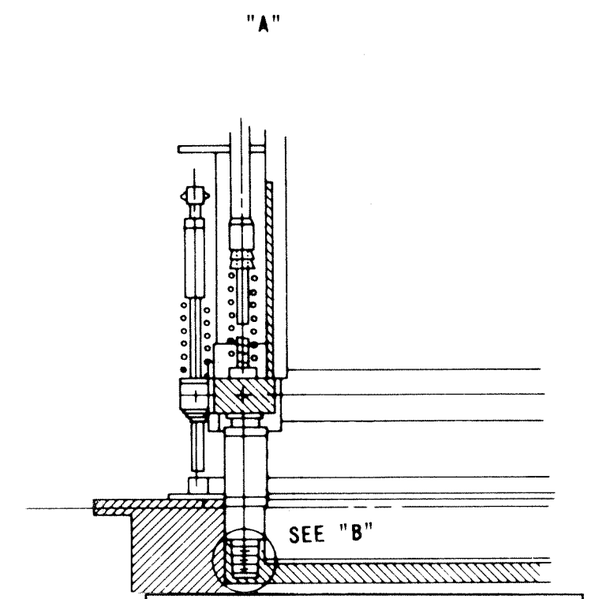

SOUTH CAROLINA ELECTRIC & GAS CO.
VIRGIL C. SUMMER NUCLEAR STATION

Upper Core Barrel Handling Fixture

Figure 9.1-11

Amendment 0
August 1984

9.2 WATER SYSTEMS

9.2.1 SERVICE WATER SYSTEM

The Service Water System (SWS) provides water from the Service Water pond, a Seismic Category 1 impoundment adjacent to Monticello Reservoir, for cooling of the emergency diesel generators, Component Cooling heat exchangers, HVAC (Heating Ventilating and Air
conditioning) mechanical water chiller condensers and the Service Water pump house cooling coils. The system also cools the reactor building cooling units (RBCUs) under: post accident or high containment pressure conditions, loss of non-Class 1E power; loss of industrial cooling water or during testing. In addition, this system is the backup water source for the Emergency Feedwater System and Component Cooling Water System. The system consists of two independent (A and B) full capacity loops with the capability of valving a third swing Service Water pump into either loop. The system is safety-related and is designed so that a single failure denies cooling to only 1 of the redundant loops. 98-01

9.2.1.1 Design Bases

The SWS is designed in accordance with the requirements of General Design Criterion 44, to provide sufficient redundant and independent capacity to ensure that cooling water is available to safety systems and components necessary to achieve and maintain a safe shutdown from normal plant operation or following a design basis accident.

SWS redundancy is protected through physical separation of equipment, barriers and double valving at interconnections of redundant loops. Physical separation is provided wherever possible to eliminate the potential for damage to both SWS headers by a missile which could be generated by equipment in the vicinity of the headers. Where physical separation is not feasible missile protection walls are employed where necessary.

SWS piping and components are classified as Safety Class 2b, except those portions of SWS piping conveying cooling water to the Digital Rod Position Indication System cooling unit, Service Water pump house cooling coils, and water jet air exhausters used to remove air from the line interconnecting the Circulating Water pumphouse and the Service Water pumphouse. Reactor Building penetrations, isolation valves and intermediate piping are classified as Safety Class 2a. The portions of SWS piping conveying cooling water to the Digital Rod Position Indication System cooling units and water jet air exhausters are classified as non-nuclear safety class and non-Seismic Category 1. The remaining system components are classified as Seismic Category 1. RN 04-039

The capacity of the SWS, with both redundant loops in operation, is adequate during a normal plant shutdown to reduce the RCS temperature to 140°F within 24 hours after reactor shutdown following an extended full power run at the current licensed RTP of 2900 MWt. With 1 of the 2 SWS loops inoperable (single failure), satisfactory cooldown can be achieved, except that the time to reduce the RCS temperature to 140°F will be extended. The SWS is capable of limiting the CCWS temperature to 105°F at the end of the 24 hour cooldown period is achieved through operation of both loops, the SWS is capable of limiting the CCWS temperature to 120°F with a single failure of the SWS. At no time during the cooldown does the CCWS temperature exceed 120°F.

The system is capable of satisfying these performance requirements with Service Water temperature at the design maximum of 95°F.

The control room operator is able to monitor the cooling performance of system components by means of instrumentation which indicates flows, temperatures and pressures or actuates alarms. Should the operating equipment fail to satisfy cooling requirements, the operator is able to place a redundant loop in service. Instrumentation for each heat exchanger and pump loop is applied so that abnormal operating conditions are identifiable by the operator.

Piping and pressure retaining components for this system satisfy the requirements of the ASME Code, Section III, Class 2 or 3, as applicable, except the non-nuclear safety class portions.

Piping and pressure retaining components of non-nuclear safety class portions of the SWS satisfy the requirements of ANSI B16.5 and ANSI B31.1.

9.2.1.2 System Description

System diagrams for the SWS are provided as Figures 9.2-1 and 9.2-2 (Sheets 1 through 4). Service water is supplied to the system by three, 100% capacity, vertical, wet pit pumps, each equipped with a two-speed motor which is permanently locked in the high speed position. Three (3) traveling water screens, each with independent controls, screen wash system and associated piping, valves, instrumentation and controls as shown by Figure 9.2-1 are also provided. The Service Water pumps can be controlled manually from the control room, the control room evacuation panel, locally or automatically as described in Section 9.2.1.3. RN 09-002

During normal plant operation, 1 of 3 Service Water pumps is in service at all times. A second SW pump may be run to limit biofouling in the inactive loop and is available for emergency use. The third Service Water pump is provided as an installed spare and its circuit breaker(s) is racked out. The spare pump can be aligned in parallel with the running Service Water pump in either loop through crossover connections. In the event of malfunction of the running Service Water pump, the spare pump is manually started to replace the running pump. The automatic start capability of the Service Water pumps is not used. RN 01-074

If 1 pump is out of service for maintenance, its circuit breaker must be placed in the test/maintenance position. The third pump must be aligned electrically and mechanically to replace the out of service pump.

Piping of the Service Water pump C is arranged so that it can be manually valved into either the A or B loop in place of Service Water pump A or B, as required. The interconnecting piping between Service Water pump C discharge and both A and B loops contains double manual valves to ensure the required double isolation between A and B loops.

Each Service Water pump has a corresponding traveling screen, screen wash system, and screen control system. The screen wash system take their water supply from the corresponding Service Water pump discharge header. Screen wash is provided using only the Service Water pumps discharge. This has been found to provide adequate screen wash force.

The diesel generator cooler in the operating SWS loop receive cooling water flow continuously, even though the diesel is not in operation. The plant Fire Protection System serves as a standby means of cooling the diesel generators. This includes automatic opening of the cross connect valves on high lube oil temperature or high jacket water temperature when the diesel is operating in the emergency mode. RN 04-039

Provision is made to supply Service Water to the Emergency Feedwater System through remotely operated valves if required. The 8” SW lines that provide backup flow to the Emergency Feedwater System are lined with a cured-in-place pipe lining to prevent MIC and general corrosion. Also, upon receipt of a "lo-lo" Component Cooling water surge tank level signal, Service Water is automatically provided for Component Cooling water makeup (see Sections 9.2.2 and 10.4.9). RN 12-030

SWS piping at the Component Cooling heat exchangers is arranged to allow back flushing of the heat exchangers, if required, by manual positioning of the valves.

A portion of the Service Water flow from each loop goes to a water jet exhauster. These air exhausters remove air that may be released from solution in the 36 inch pipe which interconnects the circulating water pumphouse and the Service Water Pumphouse. 98-01

Cooling water flow to the HVAC mechanical water chiller condensers is provided when the chiller is operating. The motor operated inlet valves open when their associated chillers are operating. Manual valves are available at the chiller outlets for isolation of these heat exchangers if required.

The RBCUs receive water from the Service Water booster pumps and the Digital Rod Position Indication System cooling unit is isolated from the Reactor Building cooling units by closing the isolation valves under safety injection, loss of non-Class 1E power, or test conditions. Upon receipt of a safety injection signal, the ESFLS starts the inactive loop at high speed. A description of safety injection actuation signals is presented in Section 7.3. The Service Water booster pumps, with throttling orifices in the discharge piping, maintain system pressure inside the Reactor Building above peak post accident pressure when Service Water flow is maintained to 2 RBCUs.

During normal operation, cooling water flow to the RBCUs and the Digital Rod Position Indication System cooling unit is provided by an industrial cooling system.

Valves XVB-3107A(B)-SW and XVB-3106A(B)-SW have been designed and interlocked to other equipment controls to mitigate two scenarios in which a pipe water hammer could occur. The first water hammer scenario was postulated to occur when the RBCUs are operating in their normal lineup where they are being cooled by the non-safety Industrial Cooling Water System and the Service Water booster pumps (SWBP) are started during normal swap over to the SW system for or after a Loss Of Offsite Power (LOOP). The second water hammer scenario is postulated to occur when the SW system is aligned to provide cooling for the RBCUs and a LOOP occurs.

To minimize the effects of the first water hammer scenario vacuum relief valves XVV-13143A(B)-SW downstream of valve XVB-3107A(B)-SW will replace, with air, any vacuum void downstream of closed valves XVB-3107A(B)-SW that may be formed due to gravity drain down of water to the SW pond. Upon the start of the SWBPs and opening of valves XVB-3107A(B)-SW, the air in the piping will act as a cushion to minimize any water hammer affects that could occur downstream of XVB-3107A(B)-SW. The opening logic of valves XVB-3107A(B)-SW has a delayed opening after valve XVB-3106A(B)-SW begins to open. The delay allows fluid flow momentum to build to assure that additional void formation in the RBCU piping inside containment will not occur during swap over to the SW system. RN 08-008

To minimize the effects of the second water hammer scenario XVB-3107A(B)-SW, fast closing air operated butterfly valves, close in seven seconds upon de-energizing of the SWBPs. During times that the RBCUs are aligned with the SW system, if a LOOP were to occur, the fast valve closure will trap water in the high points above the valve and prevent void formation due to gravity drain down of the water to the SW pond. Interface logic is provided to equipment controls that tie the start of the respective SWBP to the closed position of the respective valve XVB-3107A(B)-SW. The controls prevent a SWBP start if the respective valve XVB-3107A(B)SW failed to close within 10±1 seconds, allowing drain down of the water to the SW Pond. RN 14-044

A check valve with controlled closing speed is installed at the Service Water booster pump discharge to minimize water hammer in the event that electrical power to the pump and associated motorized discharge valve is momentarily interrupted.

Effluent from the SWS is returned to the Service Water pond by the 2 independent (A and B) loops. Motorized valves at the pump discharge and check valves at the system discharge prevent siphoning of the Service Water pond back into the system in the event of a major line rupture within the plant.

A biocide injection system was installed in the Service Water System for organic fouling control.

RN 03-049

A chemical injection system was installed to treat the Service Water System for corrosion and silt disposition.

Information concerning major SWS components is presented in Table 9.2-1.

9.2.1.3 Safety Evaluation

The Service Water System is safety-related and is used to remove heat released during the postulated loss of coolant accident (LOCA).

Three (3) 100% capacity Service Water pumps, located in the Service Water intake structure, take suction from the Seismic Category 1 Service Water pond. Thus, a positive supply of cooling water is assured.

Under emergency conditions, power is supplied to loop A and B Service Water pumps by emergency diesel generators A and B, respectively.

The Service Water pumps are vertical, wet pit pumps housed in the Service Water intake structure and are supplied with water from the Service Water pond. The Service Water pond is connected to Monticello Reservoir through an interconnecting pipe system between the circulating water intake structure and the Service Water intake structure. Piping is installed so that the flow path is interrupted if Monticello Reservoir is drawn down below elevation 415' coincident with the isolation valve being open for some unforeseen reason. The minimum required submergence, to the bottom of the suction bells, for the Service Water pumps is 5 feet. At minimum Service Water pond level, the available submergence to the bottom of the suction bell, is approximately 21 feet. A discussion of low Service Water pond level considerations is presented in Section 2.4.11.

00-01 00-01 98-01

The Service Water intake structure also has a weir to ensure that the water level in the intake structure does not drop below elevation 399', the bottom of the Service Water pump suction bell is at elevation 394'. Water may be supplied to the Service Water intake structure from Monticello Reservoir through the interconnecting pipe and thereby maintain the minimum 5 foot submergence requirement.

98-01

The Service Water pumps are valved to discharge into either of the 2 main headers supplying cooling water to the nuclear portion of the station. System design assures that a single failure does not result in loss of more than 1 of the redundant Service Water loops. Table 9.2-2 presents a SWS failure analysis. The 2 Service Water loops are designed so that all cross connections between the loops are double valved. At least 2 valves in series are closed during normal operation.

During a postulated LOCA, the 2 Service Water booster pumps supplying Service Water to the RBCUs are started. Throttling orifices in the return lines control back pressure to maintain Service Water pressure above long term post accident Reactor Building ambient pressure. This favorable pressure differentiated in conjunction with the leak-tight integrity of the RBCU coils and associated SWS piping, minimize the potential for transport of radioactive materials outside of containment in a postulated post-accident situation.

The RBCUs are normally used for Reactor Building temperature control. Normal cooling water supply to the RBCUs is provided by cooled water from the Industrial Cooling Water System. 02-01

In the event of a safety injection signal, both A and B Service Water loops, including the Service Water booster pumps are started to satisfy redundancy requirements. Each Service Water booster pump is supplied with power from the appropriate (A or B) emergency diesel generator.

During normal operation, and a postulated LOCA, 1 Service Water pump operates to supply up to 16,800 gpm of water at temperatures up to 95°F. This flow is adequate to provide sufficient cooling to one SWS loop. A second SW pump may be run to limit biofouling of the inactive loop. RN 01-074

During the postulated LOCA or upon receipt of a safety injection signal, the Digital Rod Position Indication System cooling unit is isolated from the RBCUs by closing the isolation valves.

Missile protection is discussed in Section 3.5. Pipe rupture considerations are discussed in Section 3.6.

The SWS is generally protected from radioactive contamination by 2 physical boundaries. Systems which contain radioactive materials are cooled by the Component Cooling Water System which is, in turn, cooled by the SWS. The SWS also cools the HVAC mechanical water chiller condensers where Service Water is separated from the potentially radioactive fluid by at least 3 physical barriers. The single application where Service Water is separated from radioactive fluid by only 1 physical barrier is post accident Reactor Building cooling. However, in this case, the Service Water booster pumps maintain Service Water pressure inside the Reactor Building above long term Reactor Building pressure. Reactor Building pressure exceeds SWS pressure for only a short time interval in the post accident case in the event that an individual RBCU is isolated in one or both trains.

The RBCU cooling coils, and associated SWS piping are classified as moderate energy components, in accordance with applicable pipe rupture rules. Therefore, only through wall leakage cracks may be postulated, in the long term, following a design basis accident. However, SWS pressure remains above Reactor Building pressure in the long term following a design basis accident.

The Service Water pumps can be manually controlled from the control room or from the control room evacuation panel.

The Service Water booster pumps can be manually controlled from the control room. The Service Water booster pumps automatically start upon receipt of a safety injection signal via the ESFLS. During an undervoltage condition on bus 1DA or 1DB the respective Service Water booster pumps are tripped and then loaded on the emergency diesel generator by the ESFLS. The low suction pressure trip is blocked when the booster pump starts in response to a safety injection signal.

Service water pump discharge valves are automatically driven open when their respective pumps start and are driven closed when their respective pump is shutoff. There are no operator controls provided for these valves on the main control board. The Service Water booster pump discharge valves, are automatically driven open when their respective pumps start, and close when the Service Water Booster Pump stops. 99-01

Differential pressure across each traveling screen is measured by 2 bubbler probes. Upon receipt of a high differential pressure signal from either bubbler probe (indicating dirty screens), the screen wash system is started and the screen wash isolation valve is opened. This provides high pressure water to the screen wash spray nozzles. Pressure in the spray nozzle header is sensed and provides a starting signal to the screen drive motor. This control scheme ensures that the screen wash systems do not start unless sufficient suction pressure is available and the screen is not driven unless sufficient pressure exists at the spray nozzles to ensure complete washing.

A timer ensures that the screen is washed and driven for a period corresponding to a minimum of 1-1/3 revolutions of the screen.

Capacity for local manual operation using a jog button is provided. Flow to the screens is not interrupted during the self-cleaning cycle. Upon receipt of a safety injection or loss of non-Class 1E power signal via the ESFLS, the normal screen controls are isolated and the screens cease rotation. RN 15-025

9.2.1.4 Tests and Inspections

The SWS is operated during all plant operating phases. Operation is alternated between the 2 loops during normal power operation; although a SW pump may be run to provide flow to the inactive loop to limit biofouling. Thus, normal operation verifies the operability and performance of the Service Water pumps. Therefore, no periodic testing of the pumps is necessary. Automatic startup of the system in response to a safety injection or loss of non-Class 1E power signal is verified periodically. RN 01-074

System actuation tests are performed during the refueling period when a loop is inactive. These tests check the automatic startup circuitry and operation of the actuation relays and associated components. One of the SWS loops is in operation throughout the refueling period.

Other system verifications are also performed periodically. Closure of the industrial cooler containment isolation valves in response to the applicable ESF signals during each refueling shutdown. Also, these valves are checked to verify their leak tightness (see Section 6.2.6). 98-01

9.2.1.5 Instrumentation Requirements

SWS instrumentation provides the necessary inputs for control, operation and performance/status monitoring of the system. This instrumentation is shown on Figures 9.2-1 and 9.2-2 (Sheets 1 through 4). In addition, indicators and/or controls are located on the control room evacuation panel, on local panels and near the components. RN 09-002

9.2.1.5.1 Pressure Measurement

1. Pressure Indicators

   Direct reading pressure indicators are provided on the discharge side of the Service Water pumps, on the suction side of the Service Water booster pumps, and on the discharge side of the Service Water screen wash system. 99-01

2. Pressure Transmitters

Pressure transmitters located on the discharge side of the Service Water and Service Water booster pumps and in the exit of the RBCUs provide signals for control room indication and low pressure alarms. In addition, the transmitters on the discharge side of the Service Water pumps provide auto-start signals for the Service Water pumps; however, auto-start on low pressure is no longer used because the standby concept has been replaced by an installed spare concept.

3. Pressure Switches

Switches located at the spray nozzle header provide contacts for the traveling screen start signal. Switches located on the suction side of the Service Water booster pumps provide contacts for an alarm. One switch is located on the suction side at the DRPI cooling unit booster pump providing interlock contacts which prevent the pump from starting and which trip the pump if suction pressure is not sufficient. 99-01

4. Pressure Test Connections 99-01

Pressure test connections are located throughout the system for use during performance testing.

5. Differential Pressure Switches

Two (2) independent differential pressure switches located across each traveling screen provide contacts for the respective screen wash isolation valve opening.

9.2.1.5.2 Liquid Level Measurement

Two (2) level transmitters located in the Service Water pond provide signals for control room indication and low level alarm.

9.2.1.5.3 Flow Rate Measurement

Direct reading flow indicators (locally mounted) are provided for cooling water flow to the upper and lower motor bearings for each Service Water pump A, B, and C. A flow element is provided on both the A and B 30" diameter Service Water pump discharge headers (IFE-4586 for A pump discharge; IFE-4587 for B pump discharge). The flow elements are mounted downstream of the tee in each respective discharge header which connects the header with the C pump discharge pipe. A locally mounted flow indictor (IFI-4586 or IFI-4587) is provided for flow indication for each flow element. 99-01

Flow transmitters located on the outlet side of the diesel generator coolers, Component Cooling heat exchangers and HVAC mechanical water chiller condensers provide signals to the Yokogawa units on the main control board (see Section 9.2.1.5.5), which provide both component low flow alarms and indication. RN 14-033 99-01

Flow transmitters located on the discharge side of the Service Water booster pumps and in the discharge loop headers from the RBCUs provide signals for control room indication and low flow alarms. 99-01

9.2.1.5.4 Temperature Measurement

1. Temperature Indicators

   Direct reading temperature indicators are provided on the outlet side of the diesel generator coolers, Component Cooling heat exchangers, Digital Rod Position Indication System cooling unit, HVAC mechanical water chiller condensers, and Service Water pump house cooling coils. RN 04-039

2. Temperature Elements

   Temperature elements (thermocouples) located on the outlet side of the diesel generator coolers, Component Cooling heat exchangers and HVAC mechanical water chiller condensers provide signals to the control room Yokogawa Recorders (see Section 9.2.1.5.5) which provide both high temperature alarms and indication. RN 14-033 Temperature elements which provide input through signal converters to control room indicators are located in each loop header from the reactor building cooling units and in each loop supply header. Temperature elements providing computer input are located at the motor inboard, outboard, thrust bearings and motor stators of each Service Water pump. 99-01

3. Temperature Test Connections

   Test wells are conveniently located throughout the system for use during performance testing. 99-01

9.2.1.5.5 Monitors

For those cooling heat exchangers which do not have individual flow and/or temperature indicators, Yokogawa Recorders are provided. These recorders, mounted on the main control board, accept analog signals from the individually measured temperatures and flows. For every measured variable there is an individual alarm condition window with capability provided to set an alarm condition signal limit from the measured variable. RN 14-033 For every 20 measured temperature or flow signals, an indicator is provided in temperature degrees or flow gallons per minute (GPM). Abnormal conditions are annunciated. If, at a sensor location, the temperature exceeds its maximum setpoint limit, or if the flow drops below its minimum setpoint limit, the event is alarmed. The operator checks the actual reading and takes appropriate action. To prevent RN 14-033

unnecessary alarm attendance by the operator, the variable signals are grouped so that when one Service Water loop is inactive, all of the temperature and flow variable alarms on that loop can be defeated together. Since HVAC mechanical water chiller C can be used with either Service Water loop A or loop B, flow readings appear on both A and B Yokogawa Recorders units to satisfy separation criteria. RN 14-033

9.2.1.5.6 Special Instrumentation

The main control board ESF monitor lights (see Section 7.5 for a more detailed explanation) provide an easily recognizable indication of the status of essential components and equipment. Included among the monitor lights for this system are status (position) indication of the containment isolation valves, the Service Water pump discharge valves and the valves in the return paths.

An audible and visual alarm is annunciated on the main control board if manual action by the operator deliberately bypasses the operation of the SWS.

The Service Water booster pump discharge flow and Service Water temperature in and out of the Reactor Building are part of the post accident monitoring instrumentation (see Section 7.5 for a more detailed explanation).

9.2.1.5.7 Instrumentation Qualifications

Sections 3.10, 3.11, and 7.1 outline the qualifications and diversity of the instrumentation utilized in this system.

9.2.2 COMPONENT COOLING WATER SYSTEM

The Component Cooling Water System (CCWS) serves as an intermediate, closed loop cooling system to transfer heat from components important to safety including those which may contain radioactive or potentially radioactive fluids to the Service Water System. These components are the residual heat removal (RHR) pumps, RHR heat exchangers, charging pump gear/oil coolers and Component Cooling water pump motors.

The CCWS is also utilized during normal plant operation to transfer heat from various systems and components that are not important to safety. This latter service is subsequently referred to as "nonessential". Use of the CCWS precludes release of radioactivity in the event of malfunction of one of the nonessential components. Nonessential recipients of Component Cooling water supply are as follows:

1. Reactor coolant drain tank heat exchanger.

2. Excess letdown heat exchanger.

3. Reactor coolant pumps (bearings and thermal barrier cooler).

4. Spent fuel heat exchangers.

5. Letdown heat exchanger.

6. Seal water heat exchanger.

7. Recycle evaporator package.

8. Waste evaporator package.

9. Waste gas compressors.

10. Sample heat exchangers.

11. Waste Process System recombiners.

Operation of the CCWS is required during all phases of normal plant operation, including startup through cold shutdown and refueling, as well as during emergency operation following a LOCA. Significant heat removal functions of the system are as follows:

1. Remove the excess heat generated during a plant startup.

2. Provide cooling of the letdown flow during normal power operation.

3. Remove residual and sensible heat from the Reactor Coolant System (RCS) during and after a plant shutdown.

4. Remove the residual heat released in the reactor during refueling operations and from the stored spent fuel.

5. Provide cooling to the components important to safety following a LOCA to achieve a safe shutdown or maintain a safe reactor operating condition.

9.2.2.1 Design Bases

The CCWS is designed to satisfy the requirements of General Design Criterion 44. Sufficient redundant and independent capacity ensures that cooling water is available to achieve and maintain a safe shutdown from normal plant operation, following an accident combined with a loss of offsite power and any single failure (including failure of one diesel generator). The redundancy within the CCWS is consistent with redundancies within other safety-related systems.

The basic CCWS is classified as Safety Class 2b except for the following:

1. The chemical injection system, portions of the surge tank makeup water systems and piping downstream of system relief vent and drain valves are non-nuclear safety class.

2. Penetration isolation valves and associated intermediate piping are classified as Safety Class 2a.

The basic CCWS is classified as Seismic Category 1, except for the following:

99-01

1. Radiation monitor instrument lines downstream of the seismic isolation root valves.

2. The Recycle Evaporator Package Sample Cooler and the Waste Evaporator Package Sample Cooler flow indicator's instrument lines downstream of the seismic isolation root valves.

The various systems supplied with Component Cooling water, corresponding required flow rates and heat loads associated with various plant operational modes are listed in Tables 9.2-3 through 9.2-10.

With both loops in operation, the CCWS capacity is adequate during a normal plant shutdown to reduce the RCS temperature to 140°F within 24 hours after reactor shutdown following an extended full power run at the current licensed RTP of 2900 MWt. With a single failure within the CCWS, satisfactory cooldown can be achieved, except that the time to reduce the RCS temperature to 140°F may be extended depending upon the failure. During the cooldown, the system is capable of limiting the CCWS temperature to 105°F at the end of the 24 hour cooldown period with both loops in operation. After an RCS temperature of 140°F at the end of the 24 hour cooldown period is achieved with both loops, the CCWS is capable of limiting the CCWS temperature to 120°F with a complete failure of either loop. At no time during the cooldown does the CCWS temperature exceed 120°F. The system is capable of meeting these performance requirements when provided with Service Water at a maximum temperature of 95°F. 02-01

02-01

The pressure on the Component Cooling water side of the CCWS heat exchanger is maintained at a pressure less than the pressure on the Service Water side to prevent CCW leakage into the Service Water pond should a tube leak develop within the heat exchanger. This is a non-safety related requirement.

CCWS components are accessible for necessary manual operations and maintenance. The post LOCA situation will render some of the CCWS inaccessible but will not neutralize the safety function of the system. The CCWS installation is removed or shielded from possibly radioactive process systems to preclude unacceptable personnel exposure.

CCWS components satisfy the intent of Regulatory Guide 1.48 (see Appendix 3A) and are seismically qualified.

Single failure incidents within the CCWS have been analyzed and analytical results demonstrate that no single failure precludes performance of the safety function of the system. Table 9.2-11 presents the single failure analysis.

9.2.2.2 System Description

The CCWS consists of 2 independent loops, providing 100% redundancy in the supply of cooling water for the safety-related systems, and a common supply for the nonessential systems.

System diagrams for the CCWS are included as Figures 9.2-4 through 9.2-7.

The ECCS components supplied with cooling water by the CCWS are as follows:

1. Residual heat removal pumps.

2. Residual heat removal heat exchangers.

3. Centrifugal charging pumps.

These components are parts of redundant, independent systems served by redundant, independent CCWS loops. Thus, upon loss of 1 CCWS cooling loop, or portion thereof, cooling water remains available to the redundant component in each of the safety-related systems.

As required by General Design Criterion 44, the same emergency power bus delivers power to essential components and essential elements in the same CCWS loop. Should a loss of offsite power, combined with failure of 1 onsite emergency power supply occur, the CCWS loop supplying cooling water to safety-related components receiving power from the operating emergency power supply remains operable.

The common circuit for the nonessential systems is connected to both CCWS loops through crossover connections and can be supplied from either CCWS loop. Normally, isolation valves (2 valves in series) in the crossover connections to 1 loop are closed and the circuit is aligned to receive Component Cooling water only from the operating loop. This alignment provides complete isolation between the 2 loops. Valve position status lights are provided in the control room. The crossover connections to both loops are open simultaneously only during a normal switchover operation. The crossover connections to both loops can be closed at the main control board by operator action for isolation of the nonessential circuit from both CCWS loops during safety injection or recirculation operating modes if cooling water is not required for the spent fuel pool cooling heat exchanger.

A third CCWS pump is provided which is aligned in parallel with the running pump in either loop through crossover connections. Two (2) valves in series are provided in each crossover header to maintain isolation and independence between the 2 loops. Incorrect valve alignment is alarmed in the control room. This third pump is normally aligned with the running loop and serves as a standby to the running pump. Should pressure decrease below a certain level due to a malfunction of the running pump, the standby pump is automatically started to maintain operation of the loop. The standby pump does not start as a result of a safety injection signal without loss of offsite power but remains as a backup to the running pump during subsequent operations.

If there is a loss of offsite power, the standby pump is locked out to ensure against its inadvertent startup during the restarting of the running pump by the engineered safety features load sequencer (ESFLS). It does not provide automatic backup to the running pump during subsequent operation. A manual electrical circuit realignment is performed if standby pump operation is required.

If one pump is out of service for maintenance, its circuit breaker must be placed in the test/maintenance position. The third pump must be aligned electrically and mechanically to replace the out of service pump.

Redundant valves (2 valves in series) are used in all cross connections between the two CCWS loops to ensure isolation or the capability for isolation of 1 loop from the other. Use of 2 valves ensures against loss of isolation in the event of valve pressure boundary failure or a line failure between valves combined with a valve functional failure.

The Component Cooling pumps have 2 speed capability. Operation of the pump at high speed is initiated only by manual operator action and is administratively permitted only when the nonessential circuit is connected to the loop and the RHR heat exchanger circuit is open. Only the low speed pump operating mode is associated with the CCWS safety function. One pump operating in the high speed mode satisfies normal shutdown criteria under design conditions but the capability of achieving a safe shutdown for normal operation or following an accident is not contingent upon availability of the high speed mode. Operation of a CCWS loop with the pump at high speed is an option available to the operator at any time subject to the previously noted restrictions.

The CCWS is operated during all phases of plant operation:

1. Startup.

2. Normal power operation.

3. Shutdown.

4. Refueling.

5. Under hot standby conditions.

6. Following an accident (including a LOCA).

The 2 loops are operated independently and can be operated singly or simultaneously. One (1) loop has the flow capacity to satisfy cooling water requirements under normal plant operating conditions except during normal shutdown. During normal shutdown, operation of the second loop is necessary to support operation of the second RHR pump and RHR heat exchanger to cool the reactor coolant system from 350°F to 140°F within 24 hours after reactor shutdown. A satisfactory cooldown of the Reactor Coolant System can be achieved with only 1 loop operating; however, this would extend the cooldown time.

Upon the occurrence of an accident resulting in a safety injection signal, both CCWS loops are activated. The active loop continues to operate in the normal mode. The pump in the inactive loop is automatically started in the low speed mode to provide cooling water flow through the RHR heat exchanger circuit and to its assigned safety-related pumps. If 1 loop does not operate in response to the safety injection signal, the other loop provides cooling water to the safety-related systems necessary to achieve a safe shutdown.

If 1 Component Cooling pump is out of service for repair or maintenance, its breaker must be placed in the test/maintenance position and each of the 2 remaining pumps is connected to a different loop. This maintains redundant, independent capacity for supplying cooling water to safety-related components. The valves in the crossover connections between the nonessential circuit and the inactive loop are closed.

A surge tank maintains adequate net positive suction head (NPSH) to each Component Cooling pump, provides makeup water to each loop as needed and provides compensation for fluid thermal expansion. The bottom half of the tank is partitioned such that each half serves 1 CCWS loop. Thus, a loss of water in 1 loop does not affect the other loop. Isolation and independency of the loops is thereby maintained.

Cooling water is demineralized and treated with corrosion inhibiting chemicals and an alkaline agent. Demineralized makeup water is automatically supplied to each compartment of the surge tank. An operator actuated chemical injection system prepares and injects chemical additives into the CCWS water as needed.

A connection to the pump suction piping for each loop is provided from the SWS for emergency makeup water supply to the CCWS. Emergency makeup is provided when leakage is in excess of the maximum demineralized water makeup rate of 50 gpm, or when normal makeup is not available. Breaks in miscellaneous non-nuclear safety related instrument lines as a result of seismic event would result in a maximum leakage rate of 153 gpm. A signal resulting from a lo-lo level in 1 of the baffled surge tank compartments would automatically open the Service Water isolation valve connected to that compartment. 02-01

Radiation monitors, located in each CCWS loop, detect leakage into the loop from those components containing radioactive fluid and initiate an alarm in the control room. The source of the leakage is identified by analyzing cooling water samples from the heat exchanger of each served component. The source of leakage is then isolated by closing the valves in the cooling water supply and return lines to that particular heat exchanger.

Excessive leakage of Component Cooling water is detected by pressure changes, flow rate changes, an increase in the frequency and/or duration of surge tank water makeup cycles or visual inspection of the system.

Valves are provided in the CCWS distribution circuits so that a particular circuit can be isolated from the CCWS in case of leakage or for maintenance of the heat exchanger supplied by that circuit. Also, manual shutoff valves are provided in each CCWS loop to permit isolation of a pump or Component Cooling heat exchanger for maintenance.

The CCWS loop and heat exchanger for the reactor coolant pump thermal barriers create a pressure head significantly greater than the other cooling circuits. To provide adequate pressure head for this circuit, booster pumps are utilized to create the additional pressure head required. Three (3) booster pumps are provided in a parallel arrangement. During normal operation, 1 of the pumps is operating. A second pump is in a standby condition to back up the operating pump and is started automatically if the discharge pressure decreases below a predetermined limit. The third pump is provided to maintain backup capability should 1 pump be out of service for repair or maintenance. 98-01

Since operation of the booster pumps is not a CCWS safety function requirement and the thermal barrier cooler serves only as a backup to flow from the charging pumps for reactor coolant pump seal cooling, the booster pumps receive electric power from the non-Class 1E supply buses. In the event of a safety injection signal, the operating booster pump continues to operate and the backup booster pump remains in a standby condition. However, in the event of a loss of offsite power, the operating booster pump stops and the booster pumps remain inoperable. (The reactor coolant pumps also stop if a loss of offsite power occurs.)

Flow rates, pressure and temperatures are measured in each of the CCWS circuits. At the Component Cooling heat exchangers, residual heat removal heat exchangers, RHR pumps and components necessary for normal operation, high temperature and low flow alarms are activated in the control room by the measurement systems. An alarm is also activated if a high RHR heat exchanger flow rate occurs to provide protection against excessive tube vibration. An excessive RHR heat exchanger flow can be reduced by throttling the manual valve in the CC system outlet line from the heat exchanger (XVB-9507A, B-CC). 00-01

Motor operated valves are located in the discharge lines from the reactor coolant pump thermal barrier coolers. These valves close in response to a high flow rate from the coolers and, in conjunction with a check valve upstream of the cooler, provide isolation of the CCWS from over pressurization in the event of a tube failure in the thermal barrier cooler. Corresponding isolation elements are provided in the CCWS circuit serving the excess letdown heat exchanger to isolate the balance of the CCWS from the effects of a failure in this heat exchanger.

Throttling and balancing capability is provided within each loop and within each CCWS supply circuit to balance loop flow characteristics to pump characteristics for either pump operating speed and to balance each parallel flow circuit so that it receives the required cooling flow. Likewise, if a circuit is removed from service, the other circuits and the loop balances must be adjusted accordingly. Pressure reducing orifices are used where throttling of a circuit is required under all operating conditions. Where the requirement for throttling depends upon the plant (or CCWS) operating mode, various valves in the circuits are used for temporary trim throttling.

The CCWS loops are each capable, with the pump operating at high speed, of supplying peak flow rate of approximately 11,700 gpm of water. At the beginning of plant cooldown with a maximum temperature of 120°F, the CCWS (with both loops operating) transfers a peak heat load of 251.8 x 10^6 BTU/hr (includes spent fuel pool load) to Service Water with a maximum temperature of 95°F. At a maximum CCWS temperature of 120°F and total flowrate of 7325 gpm, one CCWS Heat Exchanger can transfer 140.7 x 10^6 BTU/hr to the SWS assuming 95°F SW and 7680 gpm SWS flow. During the recirculation phase, the heat load on one CCWS loop is estimated to be 72.8 x 10^6 BTU/hr and 59.5 x 10^6 BTU/hr on the other. 00-01 98-01

Information concerning major CCWS components is presented by Table 9.2-12.

9.2.2.3 Safety Evaluation

Those portions of the CCWS required to ensure performance of safety-related functions are designed to satisfy Safety Class 2a or 2b and Seismic Category 1 requirements. All Safety Class 2a components are built in accordance with the ASME Code, Section III, Subsection NC. All Safety Class 2b components are built in accordance with the ASME Code, Section III, Subsection ND.

A single failure analysis is presented by Table 9.2-11. This analysis demonstrates that sufficient redundancy is provided with the system to ensure that safety-related functions are performed.

Protection of the CCWS from the dynamic effects of pipe rupture is discussed in Section 3.6.

Sections 9.2.2.3.1 through 9.2.2.3.3 describe CCWS operation during safety injection, recirculation and shutdown, respectively.

9.2.2.3.1 Safety Injection

Following the occurrence of a safety injection signal, the CCWS provides cooling water to both centrifugal charging pumps and RHR pumps. In subsequent phases, removal of heat from the RHR heat exchanger may be accomplished through operator action which depends upon the accident or event causing the safety injection signal.

Both CCWS loops operate during safety injection. This provides Component Cooling water to the centrifugal charging pumps and RHR pumps which ensures that the minimum safety function of these pumps is available under any accident condition, including loss of offsite power and any single failure.

Upon receipt of a safety injection signal (without loss of offsite power), the active CCWS loop continues to operate. The safety injection signal does not start the standby Component Cooling pump. However, the standby pump continues to remain active and starts automatically if there is a malfunction of the running Component Cooling pump resulting in a decrease in the loop pressure.

The inactive CCWS loop is activated in response to the safety injection signal. The supply and return lines to the RHR heat exchanger are normally open in this loop. The non-running Component Cooling pump is started automatically by the ESFLS. The loop operates to circulate cooling water through the RHR heat exchanger circuit, charging pump oil coolers, and to the RHR pump aligned with the loop.

If there is a loss of offsite power in conjunction with or subsequent to the safety injection signal, the running loop pump stops and is then restarted by the ESFLS. The pump in the non-running loop likewise stops and is restarted by the ESFLS if the loss of offsite power was preceded by a safety injection signal. The standby pump is locked out when a loss of offsite power occurs and does not start automatically if there is a subsequent malfunction of the running pump. The operating booster pump stops and the booster pumps remain inoperable.

The supply of Component Cooling water to the nonessential systems continues (unless terminated by the operators) except, if a containment, phase B isolation signal occurs, the CCWS containment isolation valves in the lines to and from the Reactor Building are closed terminating the cooling water supply to the reactor coolant pumps, the reactor coolant drain tank heat exchanger and the excess letdown heat exchanger.

The RHR heat exchanger circuit remains closed on the active loop during the injection phase. When operation of the heat exchanger is necessary for reactor cooldown or for recirculation, the RHR heat exchanger circuit is activated by the operator. The valves in the crossover connections to the nonessential circuit can be closed as the RHR heat exchanger circuit is activated and pump operation may be continued at low speed. However, if the nonessential circuit is not shut off when the RHR heat exchanger circuit is activated, the pump is switched to the high speed mode by the operator. An alternate arrangement is to isolate all of the components on the nonessential circuit except the spent fuel pool cooling heat exchanger and operate the pump at low speed. In anticipation of switchover, during the injection phase, the CC flow to the RHR Hx may be initiated in the active loop with the CC pump in slow speed; however, subsequent to completion of the switchover procedure (Table 6.3-3), the CC pump in the active loop will be placed in fast speed provided that the swing pump is available. 02-01

No operator action is required for normal operation of the CCWS during safety injection. Alarms are actuated in the event of an abnormal condition within either of the two loops. Following the occurrence of a safety injection signal, the operator may modify the operation of the system.

9.2.2.3.2 Recirculation

The post LOCA safety injection phase is followed by the recirculation phase during which the water collected in the Reactor Building from the accident and the safety injection phase is recirculated through the RHR heat exchanger and the Reactor Coolant System by the RHR pumps. During this phase the CCWS loops must transfer the heat load from the RHR heat exchangers, as well as provide cooling to the respective RHR and charging pumps.

The normally inactive loop operates during the safety injection phase with the RHR heat exchanger circuit open. Therefore, no change is necessary in the operation of this loop when recirculation is initiated. In the active loop, the RHR heat exchanger circuit is normally shut off throughout safety injection. The shutoff valve must be opened by manual operator action to activate the RHR heat exchanger for the recirculation phase. When the RHR heat exchanger circuit is opened, the operator either shuts off the nonessential supply circuit, switches the pump to the high speed mode or manually isolates the individual components on the nonessential circuit except for the spent fuel pool cooling heat exchangers. If required, the spent fuel heat exchanger may be temporarily removed from service. In anticipation of switchover, during the injection phase, the CC flow to the RHR Hx may be initiated in the active loop with the CC pump in slow speed; however, subsequent to completion of the switchover procedure (Table 6.3-3), the CC pump in the active loop will be placed in fast speed provided that the swing pump is available. 02-01 02-01

9.2.2.3.3 Shutdown

Shutdown is a transient condition which takes the plant from the hot, critical, minimum load condition to cold shutdown. During the initial shutdown period residual and sensible reactor heat are removed from the Reactor Coolant System through the steam generators. CCWS operation is continued through this initial period with no change from the normal power operation mode. After approximately 4 hours (when reactor coolant temperature and pressure are reduced to approximately 350°F and 400 psig) the cooldown heat removal function is transferred to the CCWS through the RHR heat exchangers.

Maximum heat removal demand is placed on the CCWS at this time. After maximum core operating life, the peak heat load of approximately 107 x 10^6 BTU/hr is transferred to the CCWS through each RHR heat exchanger to maintain the normal reactor cooldown rate. An additional heat load of approximately 38 x 10^6 BTU/hr is added from the RHR pumps and the nonessential systems. To handle this heat load, operation of both CCWS loops is necessary. The RHR heat exchanger circuit is opened on the operating loop and the pump is switched to the high speed mode. This loop supplies cooling water for the nonessential systems, assigned RHR pump and 1 RHR heat exchanger. Operation of the other loop in the low speed mode is initiated to supply cooling water to one RHR heat exchanger and the assigned RHR pump. Trim throttling of the high speed loop may be necessary to rebalance flows and meet temperature limits of components in the circuits for the high speed operating mode.

9.2.2.4 Tests and Inspections

The CCWS is operated during all plant operating phases. Operation is alternated between the two loops during normal power operation. In addition, the low speed mode is tested in accordance with ASME Code, Section XI. The operability and performance of the 2 Component Cooling pumps at low speed is therefore verified. Automatic startup of the system in response to a safety injection signal is verified periodically. Satisfactory startup and operation of each pump at low speed is verified prior to plant startup after each refueling period.

System tests are performed as required by Tech Specs. These tests check the automatic startup circuitry and operation of the actuation relays and associated components. One (1) of the loops is in operation throughout the refueling period. 00-01

Other system verifications are also performed periodically. Closure of the containment isolation valves in response to a "high-high" containment pressure signal is checked during each refueling shutdown. Also, these valves are checked to verify their leak tightness (see Section 6.2.6). Closure of the isolation valves in the thermal barrier discharge lines in response to a high flow signal from the downstream flow meter is verified periodically.

9.2.2.5 Instrumentation Requirements

Measurement and monitoring of radiation, pressure, liquid level, flow rate and temperature are performed for purposes of indication, alarm, control and record maintenance as required by the CCWS.

9.2.2.5.1 Radiation Measurement

A radiation monitor in each CCWS loop provides control room indication if either CCWS loop has become contaminated from the following:

1. Thermal barrier cooler leakage. 00-01

2. Tube leakage from heat exchangers with contaminated fluid served by the CCWS.

An excessive radiation level actuates control room alarms and closure of the valve in the surge tank vent line. The radiation monitoring system which performs these measurements is discussed in Section 11.4.

9.2.2.5.2 Pressure Measurement

Pressure measuring devices monitor the discharge header pressure from the Component Cooling pumps and Component Cooling booster pumps. These devices provide control room indication, alarms and automatic start of the backup Component Cooling pump when there is a decrease in discharge header pressure. Local pressure gages are used to indicate suction and discharge pressure for all CCWS pumps and the pressure in the surge tank vapor space.

9.2.2.5.3 Liquid Level Measurement

Surge tank liquid level is monitored on both sides of the baffle. High, low and low-low levels cause alarms in the control room. The low level indication causes the demineralized water makeup valve to the affected side of the tank to open. A low-low level indication causes the emergency Service Water makeup valve to the affected side of the tank to open. Clearing of low level indication causes the demineralized water makeup valve to close. Operator action is required to close the Service Water valve. 00-01

9.2.2.5.4 Flow Rate Measurement

Flow rate measurement is performed in both the essential and nonessential loops.

Identical instrumentation measures Component Cooling water flow rates in CCWS essential loops A and B. Flow rate measurements are made in the Component Cooling pump discharge headers, RHR heat exchanger inlet lines and the discharge lines from the RHR pump seals. The essential CCWS measurements provide control room indication of Component Cooling water flow to essential components.

Redundant safety related flow transmitters are provided in the supply header to the upper and lower reactor coolant pump bearings. These transmitters provide signals for flow indication and actuation of low flow alarms in the control room should CCWS flow to the pump bearings decrease to less than that required to serve three reactor coolant pumps. Redundant safety related flow transmitters are also provided in the supply header from the CCWS booster pumps to the reactor coolant pump thermal barriers. These transmitters provide signals for flow indication and actuation of low flow alarms in the control room should flow to the thermal barriers decrease to less than that required to serve three reactor coolant pumps.

Nonessential CCWS flow measurements provide the operator with flow information for each reactor coolant pump thermal barrier and bearing cooler outlet line, the waste evaporator heat exchanger package, the recycle evaporator package and the individual nonessential heat exchangers (except sample coolers) served by the CCWS. For the monitored nonessential components, an alarm is initiated when the cooling water flow rate falls below a preset limit.

9.2.2.5.5 Temperature Measurement

Temperature measurements are backup indications for control of flow measurements for both the essential and nonessential CCWS loops. For each analog flow signal transmitted to the control room (and its associated low flow limit alarm), there is a corresponding analog temperature signal transmitted to the control room and a corresponding high temperature limit alarm. Additional high temperature alarms from temperature switches are also provided. For certain analog temperature transmitting devices, there is either a local thermometer or a locally indicating temperature switch which permits local indication for checking and, in some cases, remote alarms or computer logging. By removing the adjacent thermometer or temperature switch from its thermal well, the well can be used as a reference to check the calibration of the adjacent analog temperature transmitting device. In addition, test wells are located throughout the system to allow checking of heat exchanger efficiencies.

9.2.2.5.6 Special Instrumentation

The main control board ESF monitor lights (see Section 7.5 for more detailed explanation) provide an easily recognizable indication of the status of essential components and equipment. Included among the monitor lights for this system are status (position) indication of the containment isolation valves. 02-01

An audible and visual alarm is annunciated on the main control board if manual action by the operator deliberately bypasses the operation of the CCWS.

9.2.2.5.7 Instrumentation Qualification

Sections 3.10, 3.11 and 7.1 outline the qualification and diversity of instrumentation utilized in this system.

9.2.3 DEMINERALIZED WATER MAKEUP SYSTEM

The Demineralized Water System is composed of the cycle makeup pretreatment system, which clarifies and filters raw water from Monticello Reservoir, and the cycle makeup demineralization system which demineralizes water from the cycle makeup pretreatment system for distribution to the Nuclear Steam Supply System (NSSS), the secondary (turbine) cycle, and for other miscellaneous uses. 02-01

9.2.3.1 Design Bases

The Demineralized Water System is designed to satisfy the makeup water requirements of the Reactor Coolant System and secondary (turbine) cycle systems.

The system is nonsafety-related. Piping and equipment is designed and fabricated in accordance with applicable American National Standards Institute, American Society of Testing and Materials and American Water Works Association codes and standards and the ASME Code, Section VIII.

9.2.3.2 System Description

Figures 9.2-8 and 9.2-9 show the Demineralized Water Makeup System.

In the cycle makeup pretreatment system, raw water from Monticello Reservoir is treated with a suitable flocculant and chlorine to precipitate suspended matter, remove color and adjust pH. The clarified water is filtered through automatic gravity filters, enters a 10,000 gallon filtered water break tank and is pumped into a 1,000,000 gallon filtered water storage tank. The filtered water is then pumped to miscellaneous pump seals, industrial cooler makeup, and through carbon filters to cycle makeup demineralization system. The carbon filters remove organic matter and excess chlorine as well as objectionable taste and odor. A portion of the carbon filter effluent serves as sterile water makeup for potable water service. The sterile water system includes provision for chemical treatment to disinfect and control the alkalinity of the system. RN 05-025

The cycle makeup demineralization system purifies water from the cycle makeup pretreatment system. Rated capacity of the cycle makeup demineralization system is 375 gpm (per train) and is based upon 1.5% of rated steam flow.

Two trains of demineralizer units are used. Each train includes a cation unit, anion unit and a mixed bed polishing unit. During normal operation 1 train is in service; the other, on standby or undergoing regeneration. The demineralized water is stored in a 500,000 gallon tank and pumped to the following major use points:

1. To a vacuum degasifier for primary plant cycle makeup (recycle makeup water system).

2. To miscellaneous nuclear related uses, such as resin sluicing and Component Cooling water makeup.

3. To the main condenser for secondary cycle makeup.

4. To laboratories and sampling rooms.

5. To Auxiliary Steam (AS) System Condensate Return Unit. RN 02-046

Regeneration of the demineralizer units is accomplished automatically after pushbutton initiation, using dilute sulfuric acid and dilute sodium hydroxide solution. Regenerant wastes are discharged to the neutralization waste basin for neutralization with sulfuric acid and sodium hydroxide. Neutralized wastes are pumped to Monticello Reservoir through the circulating water discharge.

9.2.3.3 Safety Evaluation

The Demineralized Water System is nonsafety-related and, therefore, is not required to operate under accident conditions.

Proper precautions are taken in the handling, storage and mixing of chemicals used in the cycle makeup pretreatment and demineralization systems. Leaks and accidental spills are confined and treated prior to disposal.

9.2.3.4 Testing and Inspection Requirements

The Demineralized Water System is tested and inspected in accordance with applicable codes and standards and vendor recommendations. Periodic monitoring of equipment controls, periodic inspection of system piping and components and testing and adjustment of equipment as suggested by the manufacturers are performed during normal operation.

9.2.3.5 Instrumentation Requirements

Measurement and monitoring of conductivity, silica, dissolved oxygen, sodium, pressures, levels, flow rates and temperatures are performed for purposes of indication, alarm, control and record maintenance at the equipment and at the local control panel. 98-01

9.2.4 POTABLE AND SANITARY WATER SYSTEMS

The potable water source and its treatment are described in Section 9.2.3. From the pressurized sterile water tank, potable water is distributed to plumbing fixtures, showers, laboratory units, laundry and emergency shower and eyewash facilities throughout the plant. No potable water is provided to potentially radioactive equipment. No radiological contamination of this system is expected during normal operation or during an accident.

9.2.5 ULTIMATE HEAT SINK

A safety class impoundment, referred to as the Service Water pond, is constructed in a small arm of Monticello Reservoir to perform ultimate heat sink functions under various conditions. The Service Water pond is created by three earth dams and the site embankment areas (see Figure 1.2-1) which are designed and constructed to meet the most severe natural phenomena as described in Chapter 2. The volume of water stored within the impoundment and the surface area related to water elevation are shown in Figure 2.4-13.

9.2.5.1 Design Bases

A description of the design bases for the ultimate heat sink is presented in Section 2.4.8.

9.2.5.2 System Description

The Service Water pond supplies water for the Service Water System under normal and emergency operating conditions. The intake for the Service Water System is located along the northwest shoreline of the pond on the west embankment. A discharge structure for this system is provided along the southwest edge of the pond and also on the west embankment.

The Service Water intake structure, as shown schematically in Figure 2.4-11, provides adequate water from either the Service Water pond or Monticello Reservoir through an interconnecting pipe and isolation valve. It is possible to safely shut down the plant using only the Service Water pond without reliance upon Monticello Reservoir. Hydraulic performance of the Service Water pond is described in Section 2.4.8. 00-01

9.2.5.3 Safety Evaluation

9.2.5.3.1 Analytical Model

A time dependent computer model developed to predict the thermal performance of the ultimate heat sink (Service Water Pond). The model used to describe the temporal and spatial thermal distribution within the Service Water pond (SWP) contained three coupled major components:

- Heat transfer between the pond and the atmosphere
- Transport of heated water discharged near the pond's surface 02-01
- Internal movement of heat within the pond (vertical transport)

Field studies of the thermal and flow characteristics of the SWP were conducted in October 1997, before and after Refueling Outage #10, the results of which were used in validating the computer model methodology. These studies included top to bottom temperature measurements to evaluate thermal stratification and dye studies to characterize the circulation patterns within the SWP.

9.2.5.3.2 Design Bases for Safety Evaluation

The Service Water pond is designed to satisfy the following requirements:

1. Service Water Flow Requirements

   a. For normal operation - 12,000 - 24,000 gpm. 02-01

   b. Under loss of coolant accident (LOCA) conditions - 32,000 gpm.

   c. For normal shutdown - 12,000 - 26,000 gpm.

      The normal operation and normal shutdown design basis SWP thermal study assumed two trains of Service Water in operation since this results in the limiting SWP temperatures for these modes. 02-01

2. Service Water System Heat Rejection

   a. During normal operation - 57.35 x 10^6 BTU/hour. 02-01

   b. Under LOCA conditions - (see Figure 9.2-10).

   c. During normal shut down - (see Figure 9.2-11).

3. Service Water Pond Levels

   a. Normal operation (mean level) - elevation 422.0’.

   b. Under LOCA conditions - elevation 414.75' - 415.0’.

   c. Normal shutdown - elevation 414.75' - 415.0’. 02-01

4. Service Water Pond Area and Capacity

   See Figure 2.4-13.

9.2.5.3.3 Analyses

The Service Water pond serves as the ultimate heat sink for the Virgil C. Summer Nuclear Station. The method used to determine the calculated heat loads for the ultimate heat sink was to sum the heat loads served by the Service Water System for the design basis LOCA. These heat loads are transferred to the Service Water System from other cooling systems as follows:

1. Component Cooling Water System

The Component Cooling Water System (CCWS) provides cooling for the residual heat removal (RHR) heat exchangers, spent fuel cooling and other NSSS auxiliaries. The RHR heat exchangers remove decay heat and sensible heat from the NSSS during the recirculation mode of Emergency Core Cooling System operation. The RHR heat duty following a LOCA is shown by Figure 9.2-10. Spent fuel cooling heat loads are included in the CCWS heat load transferred to the Service Water System following a LOCA and are listed in Table 9.2-9. 02-01

2. Reactor Building Cooling Units

The reactor building cooling units remove heat from the Reactor Building atmosphere following a LOCA and transfer it to the Service Water system. This heat load is shown by Figure 9.2-10. 02-01

3. Diesel Generator Coolers

The heat rejected from the diesel generators to the Service Water System is 21.36×10^6 BTU/hr, based upon two diesel generators operating at the 7 day load rated capacity. This heat load is assumed to remain constant over the 30 day period. 02-01

4. HVAC Mechanical Water Chillers

The Chilled Water System provides cooling for numerous safety related cooling coils. The HVAC mechanical water chillers reject the total heat load from the refrigeration system to the Service Water System. The heat load from two HVAC chillers plus compressor heat rejection is 9.9×10^6 BTU/hr assumed to remain constant throughout the 30 day period. 02-01

The analysis of the thermal performance of the Service Water pond is based upon the heat loads described in items 1 through 4, above, with added design margins, and the meteorological conditions described in Section 9.2.5.3.1. The analytical results indicate that the Service Water pond provides sufficient heat dissipation to limit Service Water intake temperature to a maximum value of less than 95°F under the most adverse conditions by restricting the pre-incident Service Water intake structure temperature to 90.5°F and the SWP level to 416.5' [6]. 02-01

9.2.5.3.3.1 Normal Operation

For the initial condition in the LOCA studies, it was considered appropriate to evaluate the thermal performance of the Service Water pond for normal meteorological and plant operating conditions. 02-01

Average monthly climatological data for a 32 year period of record (1965 through 1996) at Columbia, S. C., provided the bases for the generation of daily meteorological data for normal operation. The data included dry bulb temperatures, dewpoint temperatures and wind speeds. There are two other climatological recording stations in the vicinity of the site: Parr and Little Mountain. These stations are closer to the site than Columbia Station but do not have complete data. The nearest source of consistent and sufficiently complete data for analytical purposes is Columbia. For the parameters measured at Parr and Little Mountain, there is little difference from the Columbia data. Therefore, the Columbia data was used for the analysis. The operational conditions existing prior to RF-10 were used in the SWP computer model to estimate the SWP temperatures for the entire 32 year period. Rolling averages, over periods of 1 hour and 1 hour to 50 days, of the intake temperatures from the SWP were calculated for the 32 year period. The results indicated that the meteorological conditions from the time periods July to August 1968, 1986, and 1993 will provide the most restrictive intake temperatures. 02-01 02-01 02-01

9.2.5.3.3.2 Loss of Coolant Accident and Normal Shutdown Conditions

To study the effects of LOCA and normal shutdown heat rejection rates on the thermal performance of the Service Water pond, it is hypothesized that the most critical cases would occur if Monticello Reservoir failed completely, coincident with the interconnecting pipe isolation valve in the open position. This would cause the Service Water pond water surface elevation to drop to a minimum of elevation 415.0'. To establish the operating characteristics necessary to evaluate the thermal performance of the Service Water pond, it is further assumed that the reservoir failed instantaneously and the Service Water pond surface elevation dropped from its normal mean level at elevation 422.0' to elevation 415.0' instantaneously. An additional loss of 0.25' is included to account for seepage from the SWP. 00-01 02-01

The ultimate heat sink has been analyzed for a minimum water surface elevation of 414.75'. The volume evaporated from the surface of the SWP during the 10 day and 30 day period following the postulated LOCA initiation was determined to be $4.96X10^5$ ft^3 and $1.56X10^6$ ft^3, respectively. There are no drift losses from the pond. 02-01

The meteorological data described in Section 9.2.5.3.3.1 was used as input for LOCA cases. 02-01

9.2.5.3.4 Summary of Analytical Results

Based upon generated meteorological data and the proposed operating conditions, the analytical results show that the Service Water pond is an adequate heat sink and source of cooling water under the most adverse conditions with the pre-incident Service Water intake structure temperature limited to 90.5°F and the SWP level limited to 416.5' [6]. The maximum Service Water intake temperatures are summarized in Table 9.2-15. Vertical temperature distributions for the LOCA studies are provided on Figure 9.2-22. 02-01

Figure 2.4-1 shows the location of Service Water intake and discharge structures. The topography of the pond is also shown by this figure.

In the analysis it is assumed that the discharge to the Service Water pond is completely mixed with an equal flowrate of pond water. However, the Service Water discharge structure is designed to limit entrance mixing and encourage hot surface layer development. Figure 3.8-64 presents details of the discharge structures. This should improve the actual thermal structure by developing more satisfaction and reducing the extent of the epilimnium. It should also result in the withdrawal of cooler water at the level of the Service Water intake structure.

9.2.5.4 Testing and Inspection Requirements

Ultimate heat sink testing and inspection requirements include only periodic visual inspection of riprap.

9.2.5.5 Instrumentation Requirements

The instrumentation associated with the ultimate heat sink is described in Section 9.2.1.

9.2.6 CONDENSATE STORAGE FACILITIES

9.2.6.1 Design Bases

The condensate storage system is designed to provide and store sufficient demineralized water to satisfy secondary cycle makeup requirements.

The condensate storage system is designed to ensure that a reserve of condensate quality water is dedicated for use by the emergency feedwater system (EF). To accomplish this function, the condensate storage tank (CST) is designed to provide the EF a sufficient amount of water to refill the steam generators to no load program level plus the amount required to replenish the steam released from the steam generators through the MSSVs and PORVs. Under the uprated plant conditions with the Model Δ75 Steam Generators, the required CST volume to maintain Hot Standby for 2 hours followed by a 4 hour cooldown to RHR operation is 152,550 gallons; the required volume to maintain Hot Standby for an 11 hour period is 158,570 gallons. Therefore, 158,570 gallons is the minimum required CST inventory that is dedicated and available to the EF. The actual CST volume that is dedicated and available to the EF based on the physical configuration of the tank from the bottom of the condensate to condenser nozzle to the top of the emergency feedwater suction nozzle is 160,054 gallons. There is an additional unusable volume of 19,794 gallons below the top of the emergency feedwater suction nozzle. 99-01

Since the condensate storage tank is the primary source of emergency feedwater, it is a safety-related component. Therefore, this tank is designed, fabricated, inspected, tested and stamped in accordance with the requirements of the ASME Code, Section III, for Class 3 tanks.

9.2.6.2 System Description

The condensate storage tank and cycle makeup scheme are shown on the system diagram, Figure 10.4-8. The emergency feedwater supply is shown by Figure 10.4-16.

The system consists of one condensate storage tank, with a capacity of 500,000 gallons of condensate, and the associated makeup and distribution systems. The condensate storage tank is located outside, adjacent to the Water Treatment Building. Of the condensate storage tank capacity, 160,054 gallons is reserved for use by the emergency feedwater system. This reserve is the volume between the bottom of the condensate to condenser nozzle and the top of the emergency feedwater suction nozzle. It is maintained by having the tank connections, except those required for instrumentation, emergency feedwater pump suction, chemical analysis and tank drainage, above the level providing 160,054 gallons to the EF system. The tank is field fabricated of carbon steel, lined with an inert material. Table 9.2-16 presents tank physical details. A check valve in the drain line of the tank is provided to allow for nitrogen sparging as a method of controlling CST water oxygen levels; the sparging operation is not allowed in modes 1 - 3. 99-01

Makeup to the condensate storage tank is supplied from the 500,000 gallon demineralized water storage tank. The makeup water is routed through the main condenser for deaeration. As the makeup water enters the condenser, it increases the hotwell level. A level control valve then opens to permit condensate, from the discharge of the condensate pumps, to flow into the condensate storage tank. Makeup is cyclical in nature. The makeup control valve opens when the low tank level is reached, and closes at the high tank level.

Emergency feedwater pump recirculation lines also return water to the condensate storage tank when the emergency feedwater system is used during startup or any time an emergency feedwater pump is in a recirculating mode.

9.2.6.3 Safety Evaluation

The water contained in the condensate storage tank is normally supplied from the demineralized water storage tank through the main condenser. Radiological considerations are not a factor in design or tank location.

To assure the availability of the condensate storage tank contents, it is constructed in accordance with the ASME Code, Section III. The tank foundation is designed to satisfy Seismic Category 1 requirements. The location of the condensate storage tank ensures that releases of the stored water due to any unforeseen failure does not affect any safety-related equipment.

Freeze protection is not required for the condensate storage tank. During normal plant operation, recirculation between the condensate storage tank and the condenser hotwell may be accomplished. This technique may be used to maintain the temperature of the condensate storage tank contents well above freezing.

Freeze protection is provided, by means of electric heat tracing, for safety-related piping and instrument lines connected to the condensate storage tank, including the suction line to the emergency feedwater pumps. This line is heat traced at all exposed locations.

9.2.6.4 Tests and Inspections

Testing of this system includes operability tests associated with the tank level monitoring instrumentation that initiates the automatic transfer of the suctions of the emergency feedwater pumps on low suction pressure. Inspections are limited to periodic visual examinations of welds and connections to the tank. 02-01

9.2.6.5 Instrumentation Requirements

The condensate storage tank is provided with level instrumentation necessary for control of makeup to maintain an adequate tank operating level. Level switches initiate alarms in the control room upon detection of high level and if level decreases below that required for use by the Emergency Feedwater System. Level instrumentation associated with the Emergency Feedwater System is discussed in Section 10.4.9.

9.2.7 REACTOR MAKEUP WATER SUPPLY SYSTEM

The reactor makeup system provides for storage of tritiated but not aerated, recycled primary coolant grade water.

9.2.7.1 Design Bases

The Reactor Makeup Water Supply System is designed to perform the following functions:

1. Supply water to the Chemical and Volume Control System (CVCS). RN 09-004

2. Supply makeup water to the spent fuel pool at a rate of 150 gpm.

3. Provide a backup water supply for spray cooling in the pressurizer relief tank, capable of supplying 150 gpm.

4. Provide a water supply for makeup to and flushing of reactor auxiliary systems.

5. Provide storage capacity equal to or greater than the total 84,000 gallon capacity of the recycle holdup tanks for recycle primary coolant grade water produced in the boron recovery system and Liquid Waste Processing system.

The portion of the Reactor Makeup Water Supply System between the reactor makeup water storage tank and the CVCS and Spent Fuel Cooling System is safety related and is classified as Safety Class 2b. The remainder of the system is not safety related.

Two (2) isolation valves in series and monitor and control instrumentation ensure that flow related failures in nonsafety related portions of the system do not jeopardize the functional capability of the safety related portions.

Safety Class 2b piping, valves and equipment are designed, fabricated, tested and inspected in accordance with the ASME Code, Section III, Class 3. Nonsafety related piping and equipment satisfy the requirements of ANSI B31.1.0 and the ASME Code, Section VIII, as applicable.

9.2.7.2 System Description

Figure 9.2-24 is the Reactor Makeup Water Supply System flow diagram. Data for major system components is presented in Table 9.2-17.

The initial supply of primary coolant grade water is provided by the demineralized makeup water system. Subsequent primary grade makeup water requirements are satisfied from the 100,000 gallon capacity reactor makeup water storage tank. The principal source of makeup water in the reactor makeup water storage tank is the demineralized water system using the system vacuum degasifier transfer pumps. The boron recovery system evaporators and the liquid waste processing system evaporators are a secondary source of makeup water in the reactor makeup water storage tank when in operation. This water contains tritium. Therefore, its use is limited to reactor auxiliary systems containing radioactive fluid. RN 05-025

Water supplied to the boric acid blender for reactor coolant makeup is automatically controlled by the reactor coolant makeup control system, a part of the CVCS. Water is provided for the following upon demand by manually starting one of the two reactor makeup water pumps:

1. Makeup for evaporative losses from the spent fuel pool.

2. Flushing of boric acid and waste evaporator units, drumming station, demineralizers, resin fill hopper, reagent tanks, catalytic recombiner packages and gas decay tanks.

3. Transport of resin to and from the spent resin storage tank.

4. Dilution in the chemical mixing tank and boric acid batching tank.

5. Makeup for seal water losses in the waste gas compressors. RN 14-043

6. Cooling water to the pressurizer relief tank in the event of safety valve discharge.

The reactor makeup water storage tank is located outside the plant in the tank area adjacent to the Auxiliary Building. This tank and all outdoor system piping connecting to the tank are insulated and heat traced to maintain a minimum temperature at 40°F. The reactor makeup water pumps and most system piping are located in the Auxiliary Building.

9.2.7.3 Safety Evaluation

The portion of the reactor makeup water storage system that supplies water to the CVCS and the Spent Fuel Cooling System is Safety Class 2b since it supplies reactor coolant makeup required for normal plant shutdown, as well as makeup to the spent fuel pool. System operation is not required for ANS 18.2 [4] Condition III and IV events.

Two (2) valves in series are provided to isolate the safety-related portion of the system from the nonsafety related portion. A flow switch and a low pressure alarm provide means for detection of malfunction or operation of the nonsafety related portion of the system that could jeopardize the functional capability of the safety-related portion.

Two (2) 100% capacity reactor makeup water pumps assure that an adequate supply of water is available when required.

9.2.7.4 Inspection and Testing Requirements

Major components of the reactor makeup water system are in use during normal plant operation. The two reactor makeup water pumps are alternated during normal system operation to equalize wear. Routine observations of system piping and components are made during normal operation. Periodic tests are not required. RN 17-003

9.2.7.5 Instrumentation Requirements

RN 04-012

Measurement and monitoring of pressure, temperature, level and flow are performed for purposes of indication, alarm, control and record maintenance.

98-01

9.2.7.5.1 Pressure Instrumentation

Pressure transmitters with local indicating meters are located on the discharge of each reactor makeup water pump. These transmitters provide control room indication for monitoring pump operation. A pressure transmitter with local indicating meter is also located in the supply line from the demineralized water makeup system for purposes of control and indication.

A pressure switch located in the supply line to nonsafety related portions of the reactor makeup water system actuates an alarm in the control room should a pipe break or other malfunction occur which could cause loss of pressure. This alarm is interlocked with a low flow switch to preclude this alarm function when there is no flow in this line. 98-01

Test connections on the suction side of each pump are provided for measurement, in conjunction with the pressure transmitters, of differential pressure to check pump performance.

9.2.7.5.2 Temperature Instrumentation

Direct reading local temperature indicators are provided to permit monitoring of pump motor coolers. Redundant temperature elements in the reactor makeup water storage tank provide indication and actuate a low temperature alarm in the control room. Heat tracing circuits on the tank are automatically energized to maintain a minimum temperature of 40°F.

9.2.7.5.3 Level Instrumentation

Redundant level transmitters with local indicating meters are provided on the reactor makeup water storage tank to provide indication and high, low, and lo-lo level alarms in the control room. 00-01

9.2.7.5.4 Flow Instrumentation

A high/low flow switch with local indicating meter is provided in the supply line to the nonsafety related portions of the reactor makeup water system. The high flow switch actuates the two isolation valves in series whenever flow exceeds 150 gpm, the capacity of one reactor makeup water pump. The low flow switch provides an interlock to the low pressure switch in the non-safety related supply line to preclude the low pressure alarm when there is no flow in that line (i.e., when the header is isolated). A flow element with local indicating meter is located in the pump recirculation line from the common discharge header to the reactor makeup water storage tank to permit checking of pump performance. 98-01

9.2.8 REFERENCES

1. Deleted per RN 01-098

2. Deleted per RN 01-098 02-01

3. Deleted per RN 01-098

4. American Nuclear Society, "Nuclear Safety Criteria for the Design of Stationary Pressurized Water Reactor Plants," ANS 18.2, 1970.

5. Seckler, J. G., "Hydraulic Analysis of Interconnecting Pipe System for V. C. Summer Nuclear Station," Civil Engineering Department, Gilbert Associates, Inc., Reading, Pennsylvania, Internal Report, January, 1973.

6. Byrne, S. A., "Virgil C. Summer Nuclear Station, Docket No. 501395, Operating License No. NPF-12, Technical Specification Change Request, Ultimate Heat Sink - TSP 99-0280," RC-00-0249, June 12, 2000. 02-01

TABLE 9.2-1

MAJOR SERVICE WATER SYSTEM COMPONENTS

Service Water Pumps

Quantity	3
Type	Vertical, turbine
Location	Service water intake structure
Safety Class	2b
Speed (low/high), rpm *	880/1167
Capacity, gpm	16,800
Total Dynamic Head, ft	100
Shutoff Head, ft	233
Motor	
Two Speed	
Voltage Rating, volts a-c	6900
Rated Brake Horsepower, bhp *	
Low Speed	300
High Speed	700

99-01

99-01

* Motor locked in high speed position permanently.

Traveling Screens

Quantity	3
Type	Through flow, single speed, platform supported
Location	Service water intake structure
Safety Class	2b
Screen Width, ft	3
Screen material	304 stainless steel
Screen Mesh Opening, in	1/4
Screen Speed, ft/min	10
Design Water Velocity, ft/min	0.75 approach; 2.25 through, max
Shaft Center Distance, ft	47
Capacity, gpm	16,800

99-01

TABLE 9.2-1 (Continued)

MAJOR SERVICE WATER SYSTEM COMPONENTS

98-01

Service Water Booster Pumps

Quantity	2
Type	Single stage, double suction, horizontal, split case centrifugal, oil lubricated
Location	Service water intake structure
Safety Class	2b
Speed, rpm	1780
Capacity, gpm	4000
Total Dynamic Head, ft	235
Shutoff Head, ft	280
Motor	
Voltage Rating, volts a-c	460
Horsepower	350

TABLE 9.2-2

SERVICE WATER SYSTEM FAILURE ANALYSIS

Component	Malfunction	Comment	
Service Water Pump	Pump trips or fails to start	Service water pump in redundant loop operates to cool plant.	02-01
Service Water Booster Pump	Pump trips or fails to start	Service water booster pump in redundant loop operates to cool plant.	02-01
Traveling Screen	Jams or fails to run	Affected loop can operate for indefinite time period. Redundant loop operates to cool plant.	02-01
Electrical Channel A	Electrical malfunction	Alternate Service Water loop on B Channel operates to cool plant.	02-01
Electrical Channel B	Electrical malfunction	Alternate Service Water loop on A Channel operates to cool plant.	

TABLE 9.2-3

CCWS COOLING WATER SUPPLY AND HEAT REMOVAL REQUIREMENTS
PLANT STARTUP TO HOT CRITICAL MINIMUM LOAD

Equipment	Units in Service	Heat Load (BTU/hr, each)	Total Heat Load (BTU/hr)	Required Flow (gpm, each)	Total Flow (gpm)	
RHR Heat Exchangers	1	10.17×10^6	10.17×10^6 [(1) (6) (8)]	5600	5600	RN 03-017
Spent Fuel Heat Exchanger	1	13.32×10^6	13.32×10^6 (2)	1800	1800	
Letdown Heat Exchanger	1	16.10×10^6	16.10×10^6 (3)	1100	1100	
Excess Letdown Heat Exchanger	1	5.17×10^6	5.17×10^6 (3)	262	262	
Reactor Coolant Pumps	3	1.20×10^6	3.60×10^6 (3)	216	648	00-01
Seal Water Heat Exchanger	1	1.50×10^6	1.50×10^6	250	250	
Recycle Evaporator Package	1	8.80×10^6	8.80×10^6	780	780	
Recycle Evaporator Sample Cooler	1	0.11×10^6	0.11×10^6	10	10	
Reactor Coolant Drain Tank Heat Exchanger	1	0.64×10^6	0.64×10^6	240	240	
Waste Evaporator	1	8.80×10^6	8.80×10^6	780	780	
Waste Evaporator Sample Cooler	1	0.11×10^6	0.11×10^6	10	10	

TABLE 9.2-3 (Continued)

CCWS COOLING WATER SUPPLY AND HEAT REMOVAL REQUIREMENTS
PLANT STARTUP TO HOT CRITICAL MINIMUM LOAD

Equipment	Units in Service	Heat Load (BTU/hr, each)	Total Heat Load (BTU/hr)	Required Flow (gpm, each)	Total Flow (gpm)	
Waste Gas Compressors	1 {2}	0.135×10^6	0.135×10^6 (4)	50	100	
Sample Heat Exchangers	7	0.212×10^6	1.5×10^6	14	98	
RHR Pumps	1	0.05×10^6	0.05×10^6 (1) (6)	5	5	
Waste Process System Recombiner	1 {2}	0.07×10^6	0.07×10^6 (4)	10	20	
Radiation Monitors	1	-	-	3	3 (9)	00-01
Charging Pump oil Coolers	1	0.028×10^6	0.028×10^6 (6)	5 (5)	5 (5)	
Charging Pump gear oil coolers	1	0.0225×10^6	0.0225×10^6 (6)	5 (5)	5 (5)	00-01
Charging Pump Bypass	1	-	-	60 (5)	60 (5)	
Component Cooling Water Pump Motor	1	0.17×10^6	0.17×10^6 (6)	50	50	

TABLE 9.2-3 (Continued)

CCWS COOLING WATER SUPPLY AND HEAT REMOVAL REQUIREMENTS

PLANT STARTUP TO HOT CRITICAL MINIMUM LOAD

Totals	Single CCWS Loop in Operation	Both CCWS Loops in Operation		
		Loop 1	Loop 2	
Heat load before reactor coolant pumps started, BTU/hr	45.43×10^6	35.21×10^6	10.39×10^6	RN 03-017
Heat load after reactor coolant pumps started, BTU/hr	60.13×10^6	60.13×10^6	-	00-01
Flow, gpm, before reactor coolant pumps started	11826	6226	5658	
Flow, gpm, after reactor coolant pumps started	6226	6226	0	

{ } Units receiving CCWS flow.
(1) Discontinued after reactor coolant pumps started.
(2) Based on 72 assemblies at 21days and 1709 cooled for more than 18 months. RN 03-017
(3) No heat load until reactor coolant pumps started.
(4) CCWS water supplied to both units, however only one in operation.
(5) The total flow of Component Cooling water to the branch serving the Charging pump is 70 GPM. The 70 GPM flow includes the 5 GPM used for lube oil cooling, 5 GPM for gear oil cooling, and the remainder passes through a flow balancing bypass at the inlet to the pump cooling water piping. The flow totals are based on the 70 GPM flow required to the branch.
(6) Essential Load
(7) During startup, the running charging pump is typically in the loop carrying the non-essentials (Loop 1).
(8) Based on 85 assembles at 21 days. RN 03-017
(9) Flow exists per loop if respective CCWS pump is operating.

TABLE 9.2-4

CCWS COOLING WATER SUPPLY AND HEAT REMOVAL REQUIREMENTS
NORMAL POWER OPERATION

Equipment	Units in Service	Heat Load (BTU/hr, each)	Total Heat Load (BTU/hr)	Required Flow (gpm, each)	Total Flow (gpm)
RHR Heat Exchangers	-	-	-	-	-
Spent Fuel Heat Exchangers	1	13.32×10^6	13.32×10^6 (3)	1800	1800
Letdown Heat Exchanger	1	11.05×10^6 (1) 5.21×10^6 (2)	11.05×10^6 (1) 5.21×10^6 (2)	575 (1) 155 (2)	575 (1) 155 (2)
Excess Letdown Heat Exchanger	-	-	-	-	-
Reactor Coolant Pumps	3	1.2×10^6	3.6×10^6	216	648
Seal Water Heat Exchanger	1	1.5×10^6	1.5×10^6	250	250
Recycle Evaporator Package	1	8.8×10^6	8.8×10^6	780	780
Recycle Evaporator Sample Cooler	1	0.11×10^6	0.11×10^6	10	10
Reactor Coolant Drain Tank Heat Exchanger	1	2.23×10^6	2.23×10^6	240	240
Waste Evaporator	1	8.8×10^6	8.8×10^6	780	780
Waste Evaporator Sample Cooler	1	0.11×10^6	0.11×10^6	10	10

00-01

TABLE 9.2-4 (Continued)

CCWS COOLING WATER SUPPLY AND HEAT REMOVAL REQUIREMENTS
NORMAL POWER OPERATION

Equipment	Units in Service	Heat Load (BTU/hr, each)	Total Heat Load (BTU/hr)	Required Flow (gpm, each)	Total Flow (gpm)	
Waste Gas Compressors	1 {2}	0.135×10^6	0.135×10^6	50	100 (6)	
Sample Heat Exchangers	7	0.212×10^6	1.5×10^6	14	98	
RHR Pumps (5)	- {1}	-	-	5	5	
Waste Process System Recombiner	1 {2}	0.07×10^6	0.07×10^6	10	20 (6)	
Radiation Monitors	1	-	-	3	3 (7)	00-01
Charging Pump oil cooler	1	0.028×10^6	0.028×10^6 (5)	5 (4)	5 (4)	
Charging Pump gear oil cooler	1	0.0225×10^6	0.0225×10^6 (5)	5 (4)	5 (4)	
Charging Pump Bypass	1	-	-	60 (4)	60 (4)	00-01
Component Cooling Water Pump Motor	1	0.17×10^6	0.17×10^6 (5)	50	50	

TABLE 9.2-4 (Continued)

CCWS COOLING WATER SUPPLY AND HEAT REMOVAL REQUIREMENTS
NORMAL POWER OPERATION

Totals	Maximum (1)	Normal (2)	
Heat Load, BTU/hr	51.5×10^6	45.6×10^6	00-01
Flow, gpm	5439	5019	

{ } Units receiving CCWS flow.
(1) Maximum letdown (load following or purification),
(2) Normal letdown
(3) Based on 72 assemblies at 21days and 1709 cooled for more than 18 months. RN 03-017
(4) The total flow of Component Cooling water to the branch serving the Charging pump is 70 GPM. The 70 GPM flow includes the 5 GPM used for lube oil cooling, 5 GPM for gear oil cooling, and the remainder passes through a flow balancing bypass at the inlet to the pump cooling water piping. The flow totals are based on the 70 GPM flow required to the branch.
(5) Essential Load.
(6) CCWS water supplied to both units; however, only one is in operation.
(7) Flow exists per loop if respective CCWS pump is operating. 00-01

TABLE 9.2-5

CCWS COOLING WATER SUPPLY AND HEAT REMOVAL REQUIREMENTS
NORMAL PLANT SHUTDOWN AT 4 HOURS

Equipment	Units in Service	Heat Load (BTU/hr, each)	Total Heat Load (BTU/hr)	Required Flow (gpm, each)	Total Flow (gpm)	
RHR Heat Exchangers	1 2	122.53×10^6 107×10^6 (2)	122.53×10^6 (1) 214×10^6 (2)	5600	11,200	00-01
Spent Fuel Heat Exchanger	1	-	13.32×10^6 (3) (6)	1800 (3)	1800 (3)	
Letdown Heat Exchanger	1	1.88×10^6	1.88×10^6 (4)	700	700	
Excess Letdown Heat Exchanger	-	-	-	-	-	
Reactor Coolant Pumps	1 {3}	1.2×10^6	1.2×10^6	216	648	00-01
Seal Water Heat Exchanger	1	1.5×10^6	1.5×10^6	250	250	
Recycle Evaporator Package	1	8.8×10^6	8.8×10^6	780	780	
Recycle Evaporator Sample Cooler	1	0.11×10^6	0.11×10^6	10	10	
Reactor Coolant Drain Tank Heat Exchanger	1	-	-	240	240	
Waste Evaporator	1	8.8×10^6	8.8×10^6	780	780	
Waste Evaporator Sample Cooler	1	0.11×10^6	0.11×10^6	10	10	

TABLE 9.2-5 (Continued)

CCWS COOLING WATER SUPPLY AND HEAT REMOVAL REQUIREMENTS
NORMAL PLANT SHUTDOWN AT 4 HOURS

Equipment	Units in Service	Heat Load (BTU/hr, each)	Total Heat Load (BTU/hr)	Required Flow (gpm, each)	Total Flow (gpm)	
Waste Gas Compressors	1 {2}	0.135×10^6	0.135×10^6	50	100	
Sample Heat Exchangers	7	0.2×10^6	1.4×10^6	14	98	
RHR Pumps	2	0.05×10^6	0.1×10^6	5	10	
Waste Process System Recombiner	1 {2}	0.07×10^6	0.07×10^6	10	20	
Radiation Monitors	2	-	-	3	6 (9)	
Charging Pump oil coolers	1	0.028×10^6	0.028×10^6	5 (5)	5 (5)	
Charging Pump gear oil cooler	1	0.0225×10^6	0.0225×10^6	5 (5)	5 (5)	
Charging Pump Bypass	1	-	-	60 (5)	60 (5)	00-01
Component Cooling Water Pump Motor	2	0.17×10^6	0.34×10^6	50	100	

TABLE 9.2-5 (Continued)

CCWS COOLING WATER SUPPLY AND HEAT REMOVAL REQUIREMENTS
NORMAL PLANT SHUTDOWN AT 4 HOURS

Totals		CCWS Loop 1 (4) (8)	CCWS Loop 2 (4)	
Two loops operating	Heat Load, BTU/hr	144.6×10^6	107.22×10^6	00-01
	Flow, gpm	11164	5658	
One loop operating	Heat Load, BTU/hr	138.23		
	Flow, gpm	9364 (10)		

{ } Units receiving CCWS flow.
(1) Includes one RCP, decay heat at 4 hours, and a 0° F/hr cooldown. 00-01
(2) Includes one RCP, decay heat at 4 hours, and sensible heat from a 50° F/hr cooldown rate of the RCS.
(3) Normally not required during cooldown but included for system design purposes.
(4) Both loops in operation.
(5) The total flow of Component Cooling water to the branch serving the Charging pump is 70 GPM. The 70 GPM flow includes the 5 GPM used for lube oil cooling, 5 GPM for gear oil cooling, and the remainder passes through a flow balancing bypass at the inlet to the pump cooling water piping. The flow totals are based on the 70 GPM flow required to the branch.
(6) Based on 72 assemblies at 21days and 1709 cooled for more than 18 months. RN 03-017
(7) Essential Load.
(8) The running charging pump is in the loop carrying the non-essential loads (Loop 1).
(9) Flow exits per loop if respective CCWS pump is operating.
(10) Assumes no flow to spent fuel heat exchanger. 00-01

TABLE 9.2-6

CCWS COOLING WATER SUPPLY AND HEAT REMOVAL REQUIREMENTS
NORMAL PLANT SHUTDOWN AT 24 HOURS

Equipment	Units in Service	Heat Load (BTU/hr, each)	Total Heat Load (BTU/hr)	Required Flow (gpm, each)	Total Flow (gpm)	
RHR Heat Exchangers	2	30.3×10^6 (1)	60.6×10^6	5600	11,200	
Spent Fuel Heat Exchanger	1	-	13.32×10^6 (6)	1800	1800 (2)	00-01
Letdown Heat Exchanger	-	-	-	700	700 (8)	
Excess Letdown Heat Exchanger	-	-	-	-	-	
Reactor Coolant Pumps	{3}	-	-	216	648 (8)	00-01
Seal Water Heat Exchanger	-	-	-	250	250 (8)	
Recycle Evaporator Package	1	8.8×10^6	8.8×10^6	780	780	
Recycle Evaporator Sample Cooler	1	0.11×10^6	0.11×10^6	10	10	
Reactor Coolant Drain Tank Heat Exchanger	1	-	-	240	240	
Waste Evaporator	1	8.8×10^6	8.8×10^6	780	780	
Waste Evaporator Sample Cooler	1	0.11×10^6	0.11×10^6	10	10	

TABLE 9.2-6 (Continued)

CCWS COOLING WATER SUPPLY AND HEAT REMOVAL REQUIREMENTS
NORMAL PLANT SHUTDOWN AT 24 HOURS

Equipment	Units in Service	Heat Load (BTU/hr, each)	Total Heat Load (BTU/hr)	Required Flow (gpm, each)	Total Flow (gpm)
Waste Gas Compressors	1 {2}	0.135×10^6	0.135×10^6	50	100
Sample Heat Exchangers	7	0.2×10^6	1.4×10^6	14	98
RHR Pumps	2	0.05×10^6	0.10×10^6 (5)	5	10
Waste Process System Recombiner	1 {2}	0.07×10^6	0.07×10^6	10	20
Radiation Monitors	2	-	-	3	6 (7)
Charging Pump oil coolers	1	0.028×10^6	0.028×10^6 (5)	5 (4)	5 (4)
Charging Pump gear oil cooler	1	0.0225×10^6	0.0225×10^6 (5)	5 (4)	5 (4)
Charging Pump Bypass	1	-	-	60 (4)	60 (4)
Component Cooling Water Pump Motor	2	0.17×10^6	0.34×10^6 (5)	50	100

00-01

TABLE 9.2-6 (Continued)

CCWS COOLING WATER SUPPLY AND HEAT REMOVAL REQUIREMENTS
NORMAL PLANT SHUTDOWN AT 24 HOURS

Totals	CCWS (3) Loop 1	CCWS (3) Loop 2	
Heat Load, BTU/hr	63.32×10^6	30.52×10^6	00-01
Flow, gpm	11164	5658	

{ } Units receiving CCWS flow.
(1) Design heat load (core residual heat only)
(2) Normally not required during cooldown but included for system design purposes.
(3) Both loops in operation.
(4) The total flow of Component Cooling water to the branch serving the Charging pump is 70 GPM. The 70 GPM flow includes the 5 GPM used for lube oil cooling, 5 GPM for gear oil cooling, and the remainder passes through a flow balancing bypass at the inlet to the pump cooling water piping. The flow totals are based on the 70 GPM flow required to the branch.
(5) Essential Load.
(6) Based on 72 assemblies at 21days and 1709 cooled for more than 18 months. RN 03-017
(7) Flow exists per loop when respective CCWS pump is running.
(8) Flow continues to components not in service. 00-01

TABLE 9.2-7

CCWS COOLING WATER SUPPLY AND HEAT REMOVAL REQUIREMENTS
REFUELING

00-01

Equipment	Units in Service	Heat Load (BTU/hr, each)	Total Heat Load (BTU/hr)	Required Flow (gpm, each)	Total Flow (gpm)	
RHR Heat Exchangers	2 1	21.05×10^6 20.65×10^6	42.09×10^6 [(6) (2)] 20.65×10^6 [(6) (1) (5)]	5600 5600	11,200 (2) 5600 (1)	RN 03-017
Spent Fuel Heat Exchanger	1 1	5.52×10^6 20.71×10^6	5.52×10^6 [(3) (2)] 20.71×10^6 [(5) (1)]	1800 1800	1800 1800	RN 03-017
Letdown Heat Exchanger	-	-	-	700	700	00-01
Excess Letdown Heat Exchanger	-	-	-	-	-	00-01
Reactor Coolant Pumps	-	-	-	216	648	00-01
Seal Water Heat Exchanger	-	-	-	250	250	
Recycle Evaporator Package	1	8.8×10^6	8.8×10^6	780	780	
Recycle Evaporator Sample Cooler	1	0.11×10^6	0.11×10^6	10	10	
Reactor Coolant Drain Tank Heat Exchanger	-	-	-	240	240	
Waste Evaporator	1	8.8×10^6	8.8×10^6	780	780	
Waste Evaporator Sample Cooler	1	0.11×10^6	0.11×10^6	10	10	

Reformatted Per
Amendment 00-01

TABLE 9.2-7 (Continued)

CCWS COOLING WATER SUPPLY AND HEAT REMOVAL REQUIREMENTS
REFUELING

00-01

Equipment	Units in Service	Heat Load (BTU/hr, each)	Total Heat Load (BTU/hr)	Required Flow (gpm, each)	Total Flow (gpm)	
Waste Gas Compressors	1 {2}	0.135×10^6	0.135×10^6	50	100	
Sample Heat Exchangers	-	-	-	14	98	
RHR Pumps	2	0.05×10^6	0.10×10^6 (2) (6)	5	10	00-01
Waste Process System Recombiner	1 {2}	-	-	10	20	
Radiation Monitors	2	-	-	3	6 (7)	
Charging Pump oil coolers	1 (8)	0.028×10^6	0.028×10^6 (6)	5 (4)	5 (4)	00-01
Charging Pump gear oil cooler	1 (8)	0.0225×10^6	0.0225×10^6 (6)	5 (4)	5 (4)	
Charging Pump Bypass	1	-	-	60 (4)	60 (4)	
Component Cooling Water Pump Motor	2	0.17×10^6	0.34×10^6 (6)	50	100	

Reformatted Per
Amendment 00-01

TABLE 9.2-7 (Continued)

CCWS COOLING WATER SUPPLY AND HEAT REMOVAL REQUIREMENTS
REFUELING

Totals	Both Loops in Operation (2)		Single CCWS Loop in Operation (1)	00-01
	CCWS Loop 1	CCWS Loop 2		
Heat Load, BTU/hr	44.79×10^6	21.27×10^6	59.58×10^6	RN 03-017
Flow, gpm	11164	5658	11164	

{ } Units receiving CCWS flow.
(1) Subsequent to transfer of spent fuel to spent fuel pool.
(2) Spent fuel still in core at 72 hours after shutdown.
(3) Heat load based on 1709 assemblies cooled for > 18 months. RN 03-017
(4) The total flow of Component Cooling water to the branch serving the Charging pump is 70 GPM. The 70 GPM flow includes the 5 GPM used for lube oil cooling, 5 GPM for gear oil cooling, and the remainder passes through a flow balancing bypass at the inlet to the pump cooling water piping. The flow totals are based on the 70 GPM flow required to the branch. 00-01
(5) Based on 1709 assemblies cooled for > 18 months plus 72 assemblies @ 103 hours after shutdown. RN 03-017
(6) Essential Load.
(7) Flow exists if respective CCWS pump is operating.
(8) Normally one charging pump is operated during refueling to prevent backflushing of cavity water through the reactor coolant pump seals. 00-01

Reformatted Per
Amendment 00-01

TABLE 9.2-8

CCWS COOLING WATER SUPPLY AND HEAT REMOVAL REQUIREMENTS
SAFETY INJECTION

Equipment	Units in Service	Heat Load (BTU/hr, each)	Total Heat Load (BTU/hr)	Required Flow (gpm, each)	Total Flow (gpm)	
RHR Heat Exchangers	- {1}	-	-	5600 (1)	5600 (1)	
Spent Fuel Heat Exchanger	1	13.32×10^6	13.32×10^6 (5)	1800	1800	
Letdown Heat Exchanger	-	-	-	-	-	
Excess Letdown Heat Exchanger	-	-	-	-	-	
Reactor Coolant Pumps	- {3}	-	-	216 (2)	648 (2)	00-01
Seal Water Heat Exchanger	- {1}	-	-	250	250	
Recycle Evaporator Package	- {1}	-	-	780	780	
Recycle Evaporator Sample Cooler	- {1}	-	-	10	10	
Reactor Coolant Drain Tank Heat Exchanger	- {1}	-	-	240 (2)	240 (1) (2)	00-01
Waste Evaporator	- {1}	-	-	780	780	
Waste Evaporator Sample cooler	- {1}	-	-	10	10	

TABLE 9.2-8 (Continued)

CCWS COOLING WATER SUPPLY AND HEAT REMOVAL REQUIREMENTS
SAFETY INJECTION

Equipment	Units in Service	Heat Load (BTU/hr, each)	Total Heat Load (BTU/hr)	Required Flow (gpm, each)	Total Flow (gpm)
Waste Gas Compressors	1 {2}	-	-	50	100
Sample Heat Exchangers	- {7}	-	-	14	98
RHR Pumps	2	0.05×10^6	0.10×10^6 (7)	5	10
Waste Process System Recombiner	1 {2}	-	-	10	20
Radiation Monitors	2	-	-	3	6 (6)
Charging Pump oil coolers	2	0.028×10^6	0.056×10^6 (7)	5 (4)	10 (4)
Charging Pump gear oil cooler	2	0.0225×10^6	0.045×10^6 (7)	5 (4)	10 (4)
Charging Pump Bypass	1	-	-	60 (4)	60 (4)
Component Cooling Water Pump Motor	2	0.17×10^6	0.34×10^6 (7)	50	100

00-01

Reformatted Per
Amendment 00-01

TABLE 9.2-8 (Continued)

CCWS COOLING WATER SUPPLY AND HEAT REMOVAL REQUIREMENTS
SAFETY INJECTION

Totals	CCWS (1) LOOP 1	CCWS (1) LOOP 2	
Heat Load, BTU/hr	13.59×10^6	0.27×10^6	
Flow, gpm	4864 (3)	5728	00-01

{ } Units receiving CCWS flow.
(1) No change in operating loop. Inactive loop started to low speed with RHR heat exchanger on line.
(2) CCW flow terminated on containment, Phase B isolation signal.
(3) If containment, Phase B isolation signal occurs, flow required is 3976 gpm.
(4) The total flow of Component Cooling water to the branch serving the Charging pump is 70 GPM. The 70 GPM flow includes the 5 GPM used for lube oil cooling, 5 GPM for gear oil cooling, and the remainder passes through a flow balancing bypass at the inlet to the pump cooling water piping. The flow totals are based on the 70 GPM flow required to the branch.
(5) Based on 72 assemblies at 21 days and 1709 cooled for > 18 months. RN 03-017
(6) Flow exists if respective CCWS pump is operating.
(7) Essential Load.

TABLE 9.2-9

CCWS COOLING WATER SUPPLY AND HEAT REMOVAL REQUIREMENTS
RECIRCULATION

Equipment	Units in Service	Heat Load (BTU/hr, each)	Total Heat Load (BTU/hr)	Required Flow (gpm, each)	Total Flow (gpm)	
RHR Heat Exchangers	2	59.244×10^6	118.488×10^6	5600	11,200	
Spent Fuel Heat Exchanger	1	13.32×10^6 (4)	-	1600 (2)	1600 (2)	
Letdown Heat Exchanger	-	-	-	-	- (7)	00-01
Excess Letdown Heat Exchanger	-	-	-	-	- (7)	
Reactor Coolant Pumps	-	-	-	-	(1)	
Seal Water Heat Exchanger	-	-	-	-	(1)	
Recycle Evaporator Package	-	-	-	-	(1)	
Recycle Evaporator Sample Cooler	-	-	-	-	(1)	
Reactor Coolant Drain Tank Heat Exchanger	-	-	-	-	(1)	
Waste Evaporator	-	-	-	-	(1)	
Waste Evaporator Sample Cooler	-	-	-	-	(1)	

TABLE 9.2-9 (Continued)

CCWS COOLING WATER SUPPLY AND HEAT REMOVAL REQUIREMENTS
RECIRCULATION

Equipment	Units in Service	Heat Load (BTU/hr, each)	Total Heat Load (BTU/hr)	Required Flow (gpm, each)	Total Flow (gpm)
Waste Gas Compressors	-	-	-	-	(1)
Sample Heat Exchangers	-	-	-	-	(1)
RHR Pumps	2	0.05×10^6	0.1×10^6 (6)	5	10
Waste Process System Recombiner	-	-	-	-	(1)
Radiation Monitors	2	-	-	3	6 (5)
Charging Pump oil coolers	2	0.028×10^6	0.056×10^6 (6)	5 (3)	10 (3)
Charging Pump gear oil cooler	2	0.0225×10^6	0.045×10^6 (6)	5 (3)	10 (3)
Charging Pump Bypass	1	-	-	60 (3)	60 (3)
Component Cooling Water Pump Motor	2	0.17×10^6	0.34×10^6 (6)	50	100

00-01

TABLE 9.2-9 (Continued)

CCWS COOLING WATER SUPPLY AND HEAT REMOVAL REQUIREMENTS
RECIRCULATION

Totals	CCWS LOOP 1	CCWS LOOP 2	00-01
Heat Load, BTU/hr	72.83×10^6	59.51×10^6	
Flow, gpm	7328	5728	

{ } Units receiving CCWS flow
(1) CCW flow assumed to be shut off, for slow speed operation in the active loop.
(2) Flow reduced from the normal 1800 gpm, to allow slow speed operation of the CC pump in the active loop. 00-01
(3) The total flow of Component Cooling water to the branch serving the Charging pump is 70 GPM. The 70 GPM flow includes the 5 GPM used for lube oil cooling, 5 GPM for gear oil cooling, and the remainder passes through a flow balancing bypass at the inlet to the pump cooling water piping. The flow totals are based on the 70 GPM flow required to the branch.
(4) Based on 72 assemblies at 21 days and 1709 assemblies cooled for > 18 months. RN 03-017
(5) Flow exists if respective CCWS pump is running.
(6) Essential Load
(7) Excess letdown valve must be closed by operator if it was not closed. Letdown flow is shut by letdown temperature control. 00-01

TABLE 9.2-10

CCWS COOLING WATER SUPPLY AND HEAT REMOVAL REQUIREMENTS
HOT STANDBY, LOSS OF OFFSITE POWER

Equipment	Units in Service	Heat Load (BTU/hr each)	Total Heat Load (BTU/hr)	Required Flow (gpm, each)	Total Flow (gpm)	
RHR Heat Exchangers	-	-	-	-	-	
Spent Fuel Heat Exchanger	1	13.32×10^6	13.32×10^6 (3)	1800	1800	
Letdown Heat Exchanger	1	5.21×10^6	5.21×10^6	155	155	
Excess letdown Heat Exchanger	-	-	-	-	-	
Reactor Coolant Pumps	-	-	-	216	648	00-01
Seal Water Heat Exchanger	1	1.5×10^6	1.5×10^6	250	250	
Recycle Evaporator Package	{1}	-	-	780(1)	780 (1)	
Recycle Evaporator Sample Cooler	{1}	-	-	10(1)	10 (1)	
Reactor Coolant Drain Tank Heat Exchanger	1	-	-	240	240	00-01
Waste Evaporator	{1}	-	-	780(1)	780 (1)	
Waste Gas Compressors	{2}	-	-	50(1)	100 (1)	

TABLE 9.2-10 (Continued)

CCWS COOLING WATER SUPPLY AND HEAT REMOVAL REQUIREMENTS
HOT STANDBY, LOSS OF OFFSITE POWER

Equipment	Units in Service	Heat Load (BTU/hr each)	Total Heat Load (BTU/hr)	Required Flow (gpm, each)	Total Flow (gpm)	
Waste Evaporator Sample Cooler	{1}	-	-	10 (1)	10 (1)	00-01
Sample Heat Exchangers	7	0.212×10^6	1.5×10^6	14	98	
RHR Pumps	{1}	-	-	5	5	
Waste Process System Recombiner	1 {2}	0.07×10^6	0.07×10^6	10	20	
Radiation Monitors	1	-	-	3	3 (4)	
Charging Pump oil coolers	1	0.028×10^6	0.028×10^6 (5)	5 (2)	5 (2)	
Charging Pump gear oil cooler	1	0.0225×10^6	0.0225×10^6 (5)	5 (2)	5 (2)	00-01
Charging Pump Bypass	1	-	-	60 (2)	60 (2)	
Component Cooling Water Pump Motor	1	0.17×10^6	0.17×10^6 (5)	50	50	

TABLE 9.2-10 (Continued)

CCWS COOLING WATER SUPPLY AND HEAT REMOVAL REQUIREMENTS
HOT STANDBY, LOSS OF OFFSITE POWER

TOTALS		
Heat Load, BTU/hr	21.82×10^6	00-01
Flow, gpm	5019	

{ } Units receiving CCWS flow.
(1) Flows can be shut off.
(2) The total flow of Component Cooling water to the branch serving the Charging pump is 70 GPM. The 70 GPM flow includes the 5 GPM used for lube oil cooling, 5 GPM for gear oil cooling, and the remainder passes through a flow balancing bypass at the inlet to the pump cooling water piping. The flow totals are based on the 70 GPM flow required to the branch.
(3) Based on 72 assemblies at 21 days and 1709 assemblies cooled for > 18 months. RN 03-017
(4) Flow exists if respective CCWS pump is operating.
(5) Essential Load

TABLE 9.2-11

COMPONENT COOLING WATER SYSTEM SINGLE FAILURE ANALYSIS

	Component	Malfunction	Comments and Consequences
1.	Component Cooling Pumps	Rupture of Pump casing	The casing is designed for 200 psig and 200° F. The pump is protected from over pressurization by a relief valve in the discharge line. The pumps are inspectable and are located in the Intermediate Building, protected against credible missiles. All pumps can be isolated from the system.
2.	Component Cooling Pump	Standby pump fails to start	The pump in the inactive loop is started to ensure that required safety functions of the system are satisfied.
3.	Component Cooling Heat Exchanger	Shell or tube rupture	A very unlikely event. However, the heat exchanger can be isolated from the system.
4.	Piping	Pipe Crack	Since this system is low energy, only through wall leakage cracks are postulated. The maximum postulated pipe crack size would require isolation of one CCW loop. The other loop will remain operable to provide cooling water to system heat loads. (Per BTPAPCSB3-1, a failure in the redundant train need not be postulated.) 02-01

TABLE 9.2-12

MAJOR COMPONENT COOLING WATER SYSTEM COMPONENTS

Component Cooling Pumps

Quantity	3
Type	Horizontal, single stage, centrifugal
Location	Intermediate Building, elevation 412'
Safety Class	2b
Rated Operating Speed (low/high), rpm	880/1170
Rated Capacity (low speed/high speed),gpm	7200/11,700
Rated Total Dynamic Head (low speed/high speed),ft	100/165 (1)
Materials	
Casing	Cast steel
Impeller	Cast Steel
Shaft	Stainless steel
Motor	
Two Speed	
Voltage Rating	6900 volts a-c
Rated Horsepower	
Low Speed	Approximately 340
High Speed	Approximately 600

Component Cooling Heat Exchangers

Quantity	2
Type	Horizontal, shell and tube
Location	Intermediate Building elevation 412'
Safety Class	2b
Material	
Shell	Carbon steel
Tube	Stainless steel
Size (approx.) ft	50 x 7-1/2

Design Requirements (Peak Heat Load) (1)	Shell	Tube
Flow, gpm	11,700	9,000
Pressure Drop, max, psi	15	10
Pressure, psig	150	65
Heat Transfer, BTU/hr	130×10^6	
Water Inlet Temp.,°F	-	95
Water Outlet Temp., max, °F	120	-

00-01

(1) Design Requirements are performance conditions specified for heat exchanger design and may not match specific operating conditions. 00-01

TABLE 9.2-12 (Continued)

MAJOR COMPONENT COOLING WATER SYSTEM COMPONENTS

Component Cooling Heat Exchangers

Alternate Design Requirements (Normal Heat Load) [1]	Shell	Tube	
Flow, gpm	7185/5320	9,000	00-01
Heat Transfer, BTU/hr	44.5×10^6		

Surge Tank

Quantity	1	
Type	Cylindrical, bottom half divided into two compartments	
Location	Auxiliary Building elevation 463'	
Safety Class	2b	
Capacity		
Total, gal	2300	
Each Compartment, gal usable	Usable Surge Capacity Available to Accommodate Inleakage and Thermal Expansion (total), gallons 567	00-01
	Usable Surge Capacity Available Below Divider Plate to Accommodate Out-leakage (per compartment), gallons 626	
Material	Carbon steel	
Overpressure Protection, psig	+3	

Component Cooling Water Booster Pumps

Quantity	3	
Type	Horizontal, single stage centrifugal	
Location	Intermediate Bldg., Elev. 412'	
Safety Class	2b	
Rated Operating Speed, RPM	3450	
Rated Capacity, gpm	120	
Rated Total Dynamic Head, ft.	106	99-01
Materials		
Casing	SA-351 Gr CF8M	
Impeller	A-351 Gr 316SS	02-01
Shaft	A-479 Gr 316SS	
Motor		
Voltage Rating, Volts a-c	460	
Rated Horsepower	8.5	99-01

(1) Design Requirements are performance conditions specified for heat exchanger design and may not match specific operating conditions. 00-01

TABLE 9.2-15

MAXIMUM SWP INTAKE TEMPERATURE DURING A LOCA[1]

SWP Surface Elevation Feet	Maximum Intake Temperature °F	Intake Temperature at LOCA Initiation °F
414.75	95.12	90.92
415	95.06	90.88
417.5	94.44	90.49

MAXIMUM SWP INTAKE TEMPERATURE DURING NORMAL SHUTDOWN[1]

SWP Surface Elevation Feet	Maximum Intake Temperature °F	Intake Temperature at LOCA Initiation °F
414.75	95.04	90.90
415	94.97	90.86
417.5	94.33	90.48

02-01

(1) Maximum calculated values without taking into account Technical Specification limits established in Reference [6]. Under the most adverse conditions with the service water intake structure temperature and the SWP level limited to the Technical Specification values of 90.5°F and 416.5', respectively, the design basis maximum service water intake structure temperature of 95°F is not exceeded.

TABLE 9.2-16

CONDENSATE STORAGE TANK DATA

Capacity, gal	500,000
Diameter, ft	47
Height, ft	41
Material	Carbon steel
Internal Coating	Inert plastic

TABLE 9.2-17

REACTOR MAKEUP WATER SYSTEM
COMPONENT DATA

Reactor Makeup Water Pumps	
Quantity	2
Type	Canned, end suction, centrifugal
Design Flow, gpm	150
Design Head, ft	400
Speed, rpm	3450
Power required, full load kW	51
Power supply, volts	460, 3 ∅
Materials	Wetted parts, austenitic stainless steel
Connections	Flanged; 2 inch discharge, 3 inch suction
Safety Class	2b
Code	ASME III, Class 3
Reactor Makeup Water Storage Tank	
Type	Cylindrical, vertical
Capacity, gal	100,000
Design Pressure	Atmospheric
Safety Class	2b

9.3 PROCESS AUXILIARIES

9.3.1 COMPRESSED AIR SYSTEMS

The compressed air systems include the Station Service Air System, Instrument Air System, the condensate polisher compressed air system (see Section 10.4.6) and Reactor Building Instrument Air System. The Station Service Air System provides air for general plant use. The Instrument Air System provides air for instruments and controls. The Reactor Building Instrument Air System provides clean, dry air for Nuclear Steam Supply System (NSSS) instruments and valves inside the Reactor Building. Breathing air, when required, is obtained from the backup instrument air compressor.

9.3.1.1 Design Bases

The compressed air systems are designed to satisfy NSSS and balance of plant (BOP) requirements for compressed air. Piping and valves associated with the compressed air systems, except for Reactor Building penetrations, are designed, fabricated, inspected and erected in accordance with ANSI B16.5[1] and ANSI B31.1[2]. Piping and valves between and including containment isolation valves are designed, fabricated, inspected and erected in accordance with the requirements of the ASME Code, Section III, Class 2. Receiver tanks are designed, fabricated, inspected and erected in accordance with ASME Code, Section VIII, Division 1, requirements.

98-01

Seismic classification of compressed air system components is as follows:

1. Seismic Category 1

   Reactor Building piping penetrations and process piping between and including containment isolation valves.

2. Nonseismic Category.

   Remaining Service Air System piping and Instrument Air System piping.

Containment isolation valves are provided on each Reactor Building penetration for isolation during a postulated loss of coolant accident (LOCA). Isolation valves are provided on equipment and components for maintenance purposes.

Air compressors are supplied with electric power from 480 volt buses.

RN 15-017

9.3.1.2 System Description

Figures 9.3-1 through 9.3-3a provide compressed air system diagrams. Design parameters for major system components are presented in Table 9.3-1.

Two (2) electric motor driven, full capacity, oil-free rotary screw compressors located in the turbine room supply compressed air to the Station Service Air System and Instrument Air System. The air compressors take suction locally and discharge to the common air receiver. Each air compressor motor receives electric power from a different non-safety related 480 volt bus and is controlled locally or from the control room. Control switches permit placing 1 air compressor in operation and the other in standby. The standby air compressor is activated by a pressure switch mounted on the air receiver if air receiver pressure decreases to less than a predetermined value. RN 10-014

RN 10-014

A normally open valve (with limit switches) interconnects the Instrument Air System with the instrument air system backup compressor, including its air receiver, filter and dryer. This provides the Instrument Air System with a third compressor, and each is a standby to the other with similar controls.

When required, the instrument air backup compressor is isolated from the system and its output is totally dedicated to breathing air.

The instrument air backup compressor receives electric power from a 480 volt diesel bus which is isolated in the event of loss of offsite power or safety injection. In the event of a loss of offsite power, this compressor can be manually loaded onto the diesel bus after the operator has determined that all automatically sequenced loads have started. The instrument air backup compressor is an air cooled unit. RN 10-014

A diesel driven, full capacity, oil-free rotary screw compressor located outside of the Turbine Building is provided with an underground pipe connection to the main air receiver discharge. A moisture separator is installed inside the Turbine Building to protect the air system from moisture slugs. This connection allows the diesel driven compressor to supply the Station Service Air or Instrument Air System and provides an additional back-up air supply. The line from the compressor is provided with a check valve to prevent air loss if the compressor fails. The diesel driven compressor is activated by a pressure switch mounted downstream of the check valve if instrument air pressure decreases to less than a predetermined value. RN 12-018

Station Service Air is distributed to quick disconnect hose connections for use throughout the plant. A backpressure regulated valve is provided in the line supplying station service air to isolate the Station Service Air System in the event of low pressure in the Instrument Air System. Reactor Building service air is supplied by the Station Service Air System through a removable spool piece. The only anticipated need for service air within the Reactor Building is for the performance of maintenance during outages. During normal operation, the Reactor Building service air line is disconnected from the service air piping by closing the containment isolation valve and removing the spool piece.

Instrument air is filtered to remove particles larger than 5 microns and dried to a dew point of - 40°F at 100 psig. Each of the two dryers have a prefilter and afterfilter which are provided for ease of maintenance. The dryer is of the electrically heated, dual chamber, desiccant type with full flow automatic bypass piping. The Instrument Air System serves as a backup for the Reactor Building Instrument Air Services. RN 10-014

Two (2) electric motor driven, full capacity, nonlubricated, reciprocating type air compressors located in the penetration access area supply air for the Reactor Building Instrument Air System. The air compressors take suction from the Reactor Building and discharge to air receivers.

Each Reactor Building instrument air compressor receives electric power from a different 480 volt, nonessential bus and is controlled locally or from the control room. Switches are provided which allow either constant speed control or automatic start/stop air compressor operation. Under constant speed control, when demand decreases, the air compressor continues to operate but is unloaded. When automatic start/stop is selected, the air compressor stops when demand decreases and starts when demand increases. RN 15-017

Reactor Building instrument air is filtered to remove particles larger than 5 microns and dried to a dew point of 35°F at 100 psig. Two (2) full capacity, refrigerated type dryers with integral moisture separators are provided for this service. Condensate drains from the dryers, moisture separators and air receivers are piped to the nuclear drain system for sampling and disposal, due to the possibility of radioactive contamination of the system. If Reactor Building instrument air system pressure decreases to less than 90 psig, the backup instrument air valve automatically opens to supply air from the Instrument Air System.

Cooling water required for the station service and instrument air compressor water jackets and interstage coolers is supplied from the turbine building closed cycle cooling water system. Cooling water required for the reactor building instrument air compressor water jackets and aftercoolers is supplied from the Industrial Cooling Water System.

9.3.1.3 Safety Evaluation

Neither the Station Service Air System, the Instrument Air System, Instrument Air Backup System nor the Reactor Building Instrument Air System is required to mitigate the consequences of a LOCA or to achieve safe shutdown. Instruments and controls served by the Instrument Air System and the Reactor Building Instrument Air System are: 1) non-nuclear safety class and are either not required to function during a LOCA or to achieve safe shutdown; 2) nuclear safety class and fail in a safe position after loss of air supply. The only air operated devices which do not fall into one of the 2 categories described above are the feedwater isolation valves, the control room outside air dampers, the emergency feedwater system control valves and the turbine driven steam isolation valve. These air operated devices are equipped with safety related air volume tanks or accumulators.

The fire service to diesel generator cooling water isolation valves are equipped with quality related air accumulators.

Reactor building instrument air system containment isolation valves are normally open. Status lights are provided in the control room to indicate the position of these valves. Automatic closure of these containment isolation valves is initiated by receipt of a containment isolation Phase A signal.

The reactor building service air line is normally disconnected from the service air piping by a closed isolation valve and removal of the spool piece. No outleakage through the reactor building service air line is anticipated during a LOCA or under other emergency conditions.

The breathing air system containment isolation valves are normally locked closed. They will be permitted to be opened under administrative control during refueling and maintenance shutdown periods.

9.3.1.4 Testing and Inspection

Operability and performance of the air compressors is verified during normal operation of the systems.

Air compressors are subjected to manufacturer's performance testing. In addition, the completed compressed air systems are subjected to preoperational testing under design conditions.

9.3.1.5 Instrumentation Requirements

Instrumentation and controls for the compressed air systems are provided, as shown by Figures 9.3-1 through 9.3-3a to control and monitor system operation and the performance of equipment.

Local control panels are provided in the Turbine Building for the station service and instrument air compressors and in the penetration access area for the reactor building instrument air compressors. Operational control devices and monitoring instruments, as well as numerous alarms are provided on these control panels. In addition, air pressure and air flow rate are continuously monitored by local pressure indicators and flow elements mounted on the system piping. The presence of any alarm condition at one of the local panels or switches results in annunciation at a common alarm in the control room. The Breathing Air System has a carbon monoxide monitor to monitor the breathing air for carbon monoxide concentration when breathing air is in use. An alarm results in a local alarm, a remote alarm in the Health Physics Laboratory and a compressor trip and subsequent alarm in the control room. RN 10-014

A local control panel is provided in the yard beside the diesel driven compressor. An operational control switch for the auto-start of the compressor is provided on this panel. RN 12-018

An additional panel is provided on the compressor skid. This panel provides additional operational control devices and alarms.

A control switch for each compressor except the diesel driven compressor is provided in the control room to permit remote operation.

9.3.2 PROCESS SAMPLING SYSTEM

Fluid system sampling capabilities are available at numerous local sampling points located throughout the plant. Samples requiring cooling and depressurization and which are, or may be, radioactive (and therefore require frequent monitoring) are piped to the nuclear sample room through the Nuclear Sampling System. This system also provides continuous, automatic analysis of steam generator secondary side water (see Section 10.3.5 for details). In addition, the Nuclear Sampling System provides centralized sampling of vital process fluids. For turbine cycle sampling, see Section 10.3.5. The system also has the capability to sample the Reactor Coolant System during post-accident conditions.

9.3.2.1 Design Bases

The design bases for the nuclear sampling system are as follows:

1. Cool and depressurize liquid samples.
2. Provide a minimum delay of 60 seconds for reactor coolant samples, thus allowing sufficient time for N16 to decay to acceptable levels prior to leaving the Reactor Building.
3. Provide a hooded sample sink suitable for sample collection and disposition of wastes to the waste holdup tank.
4. Provide ample ventilation to protect personnel from inhalation of radioactive gases and vapors.
5. Provide demineralized rinse water.
6. Provide sufficiently high fluid velocity during purging of the lines and during sampling to retain solid particles in suspension.
7. Use lines as small as possible to control purge volumes.
8. Provide for obtaining all samples manually in accordance with a specified schedule.
9. Provide capability for purging sample lines and equipment so that representative samples are obtained. Plateout of samples is reduced by maintaining sample velocities of 2.0 ft/sec.
10. Provide for measurement of temperature, pressure and purge flow rate for each sample point.

11. Provide passive flow restriction by use of 3/8 inch OD (0.245 inch ID) tubing which restricts flow sufficiently that a passive failure of a downstream component does not prevent a safety system function required for a Condition III or Condition IV event.

12. Provide a special sampling panel for reactor coolant and RHR systems which allows for post accident sampling of these systems.

13. Provide shielding for personnel protection consistent with GDC-19.

System equipment and components are classified in accordance with the safety classifications discussed in Section 3.2. Construction of safety class equipment and components is in accordance with the ASME Code, Section III. Seismic design and safety classification of sampling lines and components conform to the classification of the system to which each sampling line is connected. The degree of compliance with Regulatory Guides 1.26 and 1.29 is discussed in Appendix 3A. Components and piping downstream of the second isolation valve are designed to non-nuclear safety class and non-Seismic Category 1 requirements. Radiation shielding is provided to protect personnel from exposure to lines or equipment containing radioactive fluids for all types of sampling (See FSAR Appendix 12A for radiation exposure and shielding discussion). RN 05-025

Provision is made for continuous flow through the sample lines from the steam generator secondary sides. Shutoff valves, which close upon receipt of a containment isolation signal (Phase A), are provided. These valves are also interlocked such that they close upon receipt of an emergency feedwater start signal, but these interlocks may be overridden by operation of a switch located at the sampling rack. This switch does not, however, override the containment isolation signal (Phase A).

9.3.2.2 System Description

The Nuclear Sampling System diagram is presented by Figures 9.3-4 and 9.3-20. Points sampled by the system are tabulated in Table 9.3-2.

Tubing from each of the nuclear sampling system sample points is routed to the nuclear sample room, located at the northwest corner of the nuclear control access area at elevation 412'. Shielding is provided for these lines where required to minimize personnel exposure.

The sampling system for obtaining a reactor coolant sample following a TMI-2 type accident will have sufficient shielding to limit general plant personnel whole body exposure to significantly less than 70 mr/hr during use of the system.

Operators of the sampling system will be protected from excessive radiation by the use of lead shielding as for example, the on-line monitors will have a 4 inch thick lead brick wall to limit whole body exposure to significantly less than 70 mr/hr. Transportable sample bombs containing the diluted liquid sample and the containment air sample may be shielded to minimize exposure to radiation during transport to the Radio-Chem 99-01 RN 05-025

Laboratory or count room for the required analyses. Slightly higher exposure may be experienced by the operators at the hands and fingers when the sample bombs are removed from their attachment point. RN 05-025

Dilution of the sample will minimize exposure of laboratory personnel to radiation during analysis of the samples. RN 05-025

System isolation valves, penetration isolation valves, test connections and reactor coolant N16 delay coils are located in the Reactor Building. Residual heat removal system isolation valves, the chemical and volume control system N16 delay coils, test vent connections and penetration isolation valves are located in the Auxiliary Building. The majority of the balance of valves and equipment are located in the nuclear sample room in the Control Building. Samples from the following extraction points are cooled using heat exchangers served by the Component Cooling Water System: 99-01

1. Residual heat removal loops (2 points).
2. Pressurizer liquid and steam spaces (2 points). 99-01
3. Reactor coolant loop B (hot leg).
4. Reactor coolant loop C (hot leg).
5. Steam generator A, secondary water (shell and blowdown).
6. Steam generator B, secondary water (shell and blowdown).
7. Steam generator C, secondary water (shell and blowdown).

An auxiliary cooler is provided for points 1 through 4 to assure samples are at required temperatures during periods of high sample flow rates.

Samples from points 5 through 7 and from accumulators A, B and C are depressurized by use of globe type throttle valves located where flashing of the sample fluid to steam does not occur. 99-01

Samples from the reactor coolant loops pass through a delay coil designed to allow sufficient time for decay of N16 prior to leaving the Reactor Building. Sample lines from extraction points 5 through 7, above, provide continuous flow of secondary fluid from the steam generators (see Section 10.3.5). 99-01

All liquids are routed to the sample sinks where purging samples can be individually collected. Mixing of primary and secondary fluids is prevented by the use of separate subsystems without interties as shown by Figures 9.3-4 and 9.3-20. Purge volumes from primary extraction points are routed to the volume control tank or waste holdup RN 05-025

tank and for the accident case, to the pressurizer relief tank. Upon completion of purging, samples can be routed to the sample sink. Sufficient volume is drawn into the sink prior to taking the sample to purge the line from the normal purge path to the sink to assure a representative sample. The liquid in the sample sink from purging and sampling is routed to the waste holdup tank. Purge volumes from secondary system extraction points are routed to a separate sink and thence to the nuclear blowdown holdup tank. RN 05-025

Extraction points 1 through 4 are directed through a special sampling panel which is designed to be used for both normal and post-accident sampling. Liquid can be analyzed for dissolved solids and isotopes. Dilution of the liquid sample can be accomplished. 99-01 RN 05-025

In addition to the sample points which require cooling and depressurization, as previously described, there are numerous local sample points throughout the plant. Local sample points on tanks are either on the discharge side of the corresponding pump or the tank has the capability of being recirculated to ensure that samples are representative. Sample lines are purged for a sufficient period of time prior to sample extraction to remove sediment deposits and air and gas pockets.

Remote manual, fail closed, solenoid valves are the primary functional valves used during sampling and for shutoff of sample lines leaving the Reactor Building and certain other high pressure, high temperature extraction points. These valves are located close to the point where the process system is tapped. Air operated valves, located in the nuclear sample room are used for throttling, shutoff and sample routing. All containment isolation valves fail closed and are closed upon receipt of a containment isolation signal (Phase A). Test connections and test vents are provided in appropriate locations to permit leak testing of the containment isolation valves.

The special sampling panel has pneumatically operated valves for control of the sampling flow path.

For sampling of gases, refer to ANSI N13.1 [3].

Component data are presented in Table 9.3-3.

9.3.2.3 Safety Evaluation

Those portions of the Nuclear Sampling System which interface with safety class systems or perform a containment isolation function are designated as Safety Class 3 or 2a. These portions of the system are designed in accordance with appropriate codes and standards as discussed in Section 3.2. The Nuclear Sampling System performs no additional safety related functions.

The seismic design and safety classification of sampling lines and components conform to the classification of the system to which each sampling line is connected. The degree of compliance with Regulatory Guides 1.26 and 1.29 is discussed in Appendix 3A. Components and piping downstream of the second isolation valve are designed to non-nuclear safety class and non-Seismic Category 1 requirements.

The system is designed to provide radiological protection consistent with GDC-19 and protection from industrial safety risks which could result from the high temperatures and pressures of some samples.

9.3.2.4 Testing and Inspection Requirements

Containment isolation valves are tested and inspected as described in Sections 6.2.4 and 6.2.6. Inservice inspection of ASME Class 2 and 3 components is discussed in Section 5.7.

Routine preventive maintenance requirements are stated in the station maintenance procedures.

9.3.2.5 Instrumentation Requirements

Nuclear sampling system instrumentation provides the signals required for reliable operation, control and performance/status monitoring of the system. Functional descriptions of system instrumentation are as follows:

1. Pressure Indicators

   Pressure indicators located throughout the system permit monitoring of the sample lines.

2. Temperature Indicators

   Temperature indicators located throughout the system permit monitoring of sample lines.

3. Flow Indicators

   Flow indicators permit monitoring of sample flow.

4. Radiation Monitor

The radiation monitor, RM-L1, shown in Figure 9.3-4, measures gross gamma activity from the reactor coolant letdown line. An increase in the activity level in this line may be indicative of a fuel clad failure. This condition also causes an alarm in the control room.

The radiation monitor RE 6992 shown in Figure 9.3-20 measures gross gamma activity from extraction points 1 through 4, as described in Section 9.3.2.2. 99-01

9.3.3 EQUIPMENT AND FLOOR DRAINAGE SYSTEM

9.3.3.1 Design Bases

To preclude backflooding as a cause of degradation of any safety related equipment or piping, an extensive network of 4 inch floor drains is provided in all buildings. Drain headers terminate in a series of sumps or tanks which are equipped with high level alarms. All sumps except the east penetration access, waste holdup tank room, chemical feed equipment drains and IB sump D-battery room sumps have automatic, redundant sump pumps. Engineered safety features equipment and piping areas are provided with floor drain sumps which are instrumented to actuate alarms in the control room when flow into the sumps exceeds the maximum expected flow of 45 to 50 gpm (alarm drains). All such alarms are audible at the main control board. Measurements, such as reactor building sump level, are displayed on the main control board. Separate drain systems are provided for reactor grade and low level waste depending upon the location served. These separate systems distribute drain flow to the proper sump or tank. Exact locations of equipment and piping and associated drain systems are shown by Figures 9.3-5 through 9.3-15 and are described in Section 9.3.3.2. Portions of the system which contain additional safety features are also discussed in Section 9.3.3.2. Reactor coolant leakage detection is discussed in Section 5.2.7. 02-01

Technical Requirements for steam propagation barriers/components (SPB) in the equipment and floor drainage system required to maintain area environmental conditions for equipment qualification (EQ) purposes are provided in plant procedures. These procedures specify the technical criteria for design, procurement, installation / maintenance and inspection of these QR components. Components may include orifice plates, check valves, or loop seals designed to segregate EQ zones to ensure that the conditions for which the equipment qualification were based on are not exceeded. RN 17-011

9.3.3.2 System Description

The equipment and floor drainage system and related sump pumping systems are shown by Figures 9.3-5 through 9.3-15.

1. Reactor Building

Reactor grade or low activity leakage may originate from equipment inside the Reactor Building. All floors above the basement, inside the Reactor Building, are

interconnected by grating or are individual structural platforms which support equipment. Consequently, safety related equipment located at these levels cannot be backflooded during normal operation. In addition, floor drains and equipment drains are installed to isolate any leakage to the local floor area concerned. These drain headers, in addition to the ones in the basement, terminate inside and below the floor opening of the reactor building sump. The refueling cavity liner seepage detection trough is part of this system.

The incore instrument sump at elevation 387'-6" collects any leakage that occurs directly around the reactor vessel and instrument chase. This affords protection for the bottom of the hot reactor vessel and instrument cable bundles.

A removable spool piece is installed in the discharge line from the incore instrumentation sump to facilitate removal of reactor cavity leakage to the reactor coolant drain tanks during refueling outages.

The accumulated drainage or leakage flows in the Reactor Building or incore instrument sump are normally sent to the floor drain tank. If increased activity is detected, the flow is aligned to the waste holdup tank. 02-01 02-01

2. Fuel Handling Building

Four inch floor drains in the Fuel Handling Building discharge to a header in the Auxiliary Building. Normal low level effluent from this header flows to the Auxiliary Building sump. The spent fuel pool liner seepage detection trough is part of this system.

The Excess Liquid Waste System, located in a separate area of the Fuel Handling Building, has its own sump system which collects floor and equipment drains. No safety class equipment is contained in this area. The sump system includes three sumps, one for each of the decontamination pit collecting tank and excess waste holdup tank cubicles and one for the general area. All sump pumps discharge to the 10,000 gallon decontamination pit collecting tank or the 10,000 gallon excess waste holdup tank, both integral to the system. The sump system also collects low level effluent from the hot machine shop decontamination room trench drain. 99-01

3. Penetration Access Areas

Floor and equipment drains in the penetration access areas flow to the 10,000 gallon floor drain tank located at the lowest level (elevation 374'-0") in the Auxiliary Building. This system contains alarm drains.

The component cooling surge tank, the reactor building instrument air compressors and dryers are all on the operating floor. The component cooling surge tank and the reactor building instrument air compressors are located in the personnel access area. The air dryers are in an area monitored by alarm drains. Main steam relief valve compartments on the mezzanine have floor drains. The basement penetration access area has floor drains and several alarm drains for leakage 99-01

detection. Floor drains in the east penetration access area flow to a common sump in the basement. The sump pump discharges to the floor drain tank.

4. Auxiliary Building

a. Drains to Waste Holdup Tank

Reactor grade equipment drains and tank overflows in the Auxiliary Building flow to the 10,000 gallon waste holdup tank at the lowest level in the building. There are no floor drains or alarms associated with this system. Equipment drains in the sub-basement flow to the 1000 gallon miscellaneous waste drain tank. A small centrifugal pump empties this tank to the waste holdup tank at the same floor elevation.

b. Drains to Floor Drain Tank

Low activity floor and equipment drains above the mezzanine and approximately one-half of all floor and equipment drains at or below the mezzanine flow directly to the 10,000 gallon floor drain tank. Alarm drains for this portion of the system alert the operator to leakage from piping above shield slabs at elevations 426’-6" and 400’-0", residual heat removal heat exchangers at elevation 412’-0" and Safety Injection System low head piping and valve chambers at floor elevation 397’-0".

c. Drains to Auxiliary Building Sump

The balance of floor and equipment drains at or below the mezzanine flow to the 1,945 gallon Auxiliary Building sump at elevation 374’-0". Alarm drains for this portion of the system protect the gas decay tank valve gallery and the charging pumps at elevation 388’-0" and the reactor building spray pumps at elevation 374’-0". Sump pumps discharge to the floor drain tank. 02-01

d. Other Auxiliary Building Sumps

The boron recycle holdup tank room sump pumps at elevation 388’-0" discharge to the liquid waste holdup tank. The liquid waste holdup tank room area sump at elevation 374’-0" is pumped to the floor drain tank.

Residual heat removal pump room sump B sump pumps at elevation 374’-0" normally discharge to the floor drain tank. Pump flow may be aligned to the waste holdup tank if necessary. Residual heat removal pump room sump A and the waste evaporator feed pump room sump contain no sump pumps. They drain to the residual heat removal pump room sump B.

The Nuclear Blowdown System reservoir, at elevation 374’-0", collects effluent from the system demineralizers and floor drains at elevation 452’-6".

Blowdown monitor and holdup tanks with demineralizers and pumps at elevation 436'-0", along with basement equipment and floor drains for this system also flow to the reservoir. Steam generator blowdown samples from the nuclear sampling room are drained to this reservoir. Reservoir sump pumps discharge to the blowdown holdup tank at elevation 436'-0".

5. Outside

The refueling water storage tank and reactor makeup water storage tank, located in an enclosure outside the Auxiliary Building at elevation 412'-0", are protected by sump pumps which discharge to a waste monitor tank.

The refueling water storage pit drain tank, installed on elevation 436'-0" northwest of refueling water storage tank sump, discharges the contents to a waste monitor tank if contents show unacceptable level of radioactivity, or to yard drainage system if contents show acceptable for release. 02-01

The sodium hydroxide storage tank is located in a cubicle outside the Auxiliary Building at elevation 412'-0". It is protected by sump pumps which discharge to the 10,000 gallon neutralization waste tank trench.

6. Intermediate Building

The alarm drains from the shield slab which run between the penetration access areas at elevation 422'-3" flow to the east penetration access area sump. The contents of this sump are pumped to the floor drain tank.

Three (3) Intermediate Building basement sumps contain a total of 6 pumps, each rated at 75 gpm. These sumps protect the component cooling water pumps and heat exchangers at the same level by discharging to the Turbine Building sump. Two (2) out of 3 sump high level alarms cause the main feedwater isolation valves and other valves to close and eliminate the most probable cause of flooding in this area (see Section 7.6).

7. Control Building

Lavatories within the normal radiation control area, hot showers, hot laundry and the floor drains in these areas flow to the laundry and hot shower tank at elevation 374'-0" in the Auxiliary Building. Fume hood sinks in the radiochemical laboratory flow to the chemical drain tank, also at elevation 374'-0" in the Auxiliary Building. The sample sink and panel drains for steam generator blowdown empty into the nuclear blowdown reservoir. The primary sample sink drainage flows to the waste holdup tank. Floor and equipment drains for the 482'-0" elevation, (except the charcoal filter plenum drains) drain via the Turbine Building sump system. The charcoal plenums, most of the floor drains, sinks in the health physics laboratory and equipment drains in the radiochemical laboratory flow to the floor drain tank.

8. Tendon Access Gallery

The tendon access gallery is provided with floor sumps which drain to a building sump. This building sump is equipped with sump pumps to pump sump contents to the Turbine Building sump.

9. Turbine Building Drains

The 250 gpm turbine room sump pumps discharge to the 6000 gallon (normal operating capacity) industrial and sanitary waste collection sump. This sump is located north of the substation fence. Releases to this system, associated with the remote possibility of low level activity spillage in the Turbine Building, are discussed in Section 11.2.7. Figure 9.3-15 illustrates this connection.

10. Valve Packing Box Leakage

Valve packing box leakage is monitored by directing any leakage from 12 groups of packing boxes to level switches. The valve groups are illustrated by Figures 9.3-13 and 9.3-13a. Each of the 12 level switches actuates a local alarm annunciator and causes a common alarm in the control room if leakage from any valve in the associated group is detected.

9.3.3.3 Safety Evaluation

The equipment and floor drain system has no active valves except for the Reactor Building sump drain system which is provided with containment isolation valves. These valves close automatically upon receipt of a Phase A containment isolation signal rendering the Reactor Building sump drains essentially inoperable.

Leakage detection floor alarm drains are provided to identify the most probable location of a leaking component or pipe line. These are located in those areas which contain safety class equipment and systems which are most important to safe plant operation. Alarm response time for leakage in excess of the maximum expected (i.e., 45 to 50 gpm) ranges from a few seconds for the alarm drains to less than 4 minutes for residual heat removal pump room B sump.

Alarm systems for greater than 1 gpm and greater than 10 gpm flow to the Reactor Building sump and an unidentified leakage indication alarm for the Incore Instrument Sump are provided. Level instruments are provided for the Reactor Building sump. The residual heat removal pump room sumps and the waste evaporator feed pump room sump are each equipped with alarms actuated by a flow of greater than 45 gpm to the sump. The residual heat removal pump rooms have a 1 foot high curb at the access openings and thus have the capacity to contain a 50 gpm leak in either room for greater than 30 minutes, without flooding equipment, if the sump pumps should fail. RN 08-017

If the contents of either the recycle holdup tank or waste holdup tank should flood either tank compartment, the spillage into the recycle holdup tank compartment is pumped to the waste holdup tank and spillage into the waste holdup tank compartment is pumped to the floor drain tank. If sump pumps are inoperative, each compartment is designed to hold the tank contents. 99-01

The plant drain system assures that spillage is collected and can be processed before being recycled or released to the environment.

9.3.3.4 Testing and Inspection Requirements

The drain system is given an extensive check for leakage and proper routing prior to actual operation. Pumps are checked for level switch control and operation. Valves in sump pump systems are aligned as shown on various system flow diagrams. Systems can be checked periodically by utilizing local control switches. Alarms are calibrated locally and checked in the control room.

9.3.3.5 Instrumentation Requirements

Display instrumentation in the control room which is related to the reactor coolant pressure boundary leakage detection system is described in Section 5.2.7 as are the information displayed and allowance for operator action. Section 7.6 discusses system instrumentation in further detail.

9.3.4 CHEMICAL AND VOLUME CONTROL SYSTEM

The Chemical and Volume Control System (CVCS) is shown in Figure 9.3-16 (Sheets 1 through 5). It is designed to provide the following services to the reactor coolant system (RCS):

1. Maintenance of programmed water level in the pressurizer, i.e., maintain required water inventory in the RCS.

2. Maintenance of seal-water injection flow to the reactor coolant pumps.

3. Control of reactor coolant water chemistry conditions, activity level, soluble chemical neutron absorber concentration and makeup.

4. Emergency core cooling (part of the system is shared with the Emergency Core Cooling System).

5. Provide means for filling, draining and pressure testing of the RCS.

9.3.4.1 Design Bases

Quantitative design bases are given in Table 9.3-4 with qualitative descriptions given below.

9.3.4.1.1 Reactivity Control

The CVCS regulates the concentration of chemical neutron absorber (boron) in the reactor coolant to control reactivity changes resulting from the change in reactor coolant temperature between cold shutdown and hot full power operation, burnup of fuel and burnable poisons, buildup of fission products in the fuel, and xenon transients.

9.3.4.1.1.1 Reactor Makeup Control

1. The CVCS is capable of borating the RCS through either 1 of 2 flow paths and from either 1 of 2 boric acid sources.

2. The amount of boric acid stored in the CVCS always exceeds that amount required to borate the RCS to cold shutdown concentration assuming that the control assembly with the highest reactivity worth is stuck in its fully withdrawn position. This amount of boric acid also exceeds the amount required to bring the reactor to hot shutdown and to compensate for subsequent xenon decay.

9.3.4.1.1.2 Boron Thermal Regeneration

The load following capabilities of the Boron Thermal Regeneration System were removed by plant modification MRF 21511. The system continues to be used as de-borating demineralizers to reduce reactor coolant boron concentration towards the end of core life. The Boron Thermal Regeneration System (BTRS) also is used to cool the letdown flow for enhanced RCP seal performance and to clean up the RCS before shutting down the reactor. RN 99-075 RN 99-027

9.3.4.1.2 Regulation of Reactor Coolant Inventory

The CVCS maintains the coolant inventory in the RCS within the allowable pressurizer level range for normal modes of operation including startup from cold shutdown, full power operation and plant cooldown. This system also has sufficient makeup capacity to maintain the minimum required inventory in the event of minor RCS leaks (see Technical Specifications for a discussion of maximum allowable RCS leakage). 00-01

9.3.4.1.3 Reactor Coolant Purification

The CVCS is capable of removing fission and activation products, in ionic form or as particulates, from the reactor coolant in order to provide access to those process lines carrying reactor coolant during operation and to reduce activity releases due to leaks.

9.3.4.1.4 Chemical Additions for Corrosion Control

The CVCS provides a means for adding chemicals to the RCS which control the pH of the coolant during initial startup and subsequent operation, scavenge oxygen from the coolant during startup, and counteract the production of oxygen in the reactor coolant due to radiolysis of water in the core region.

The CVCS is capable of maintaining the oxygen content and pH of the reactor coolant within limits specified in Table 5.2-10.

9.3.4.1.5 Seal Water Injection

The CVCS is able to continuously supply filtered water to each reactor coolant pump seal, as required by the reactor coolant pump design. In situations where the charging pumps are not available, the seals can be supplied by the Alternate Seal Injection Pump. RN 11-027

9.3.4.1.6 Emergency Core Cooling

The centrifugal charging pumps in the CVCS also serve as the high-head safety injection pumps in the Emergency Core Cooling System. Other than the centrifugal charging pumps and associated piping and valves, the CVCS is not required to function during a loss of coolant accident (LOCA). During a LOCA, the CVCS is isolated except for the centrifugal charging pumps and the piping in the safety injection path and the reactor coolant pump seal injection path. Also, at strategically identified local high points, the CVCS is provided with indicating air-traps to ensure that the ECCS portions of the CVCS remain void free (reference NRC GL 2008-01). RN 09-003

9.3.4.2 System Description

The CVCS is shown in Figure 9.3-16 (Sheets 1 through 5) with system design parameters listed in Table 9.3-4. The CVCS consists of several subsystems: the charging, letdown and seal water system; the reactor coolant purification and chemistry control system; the reactor makeup control system; and the boron thermal regeneration system.

9.3.4.2.1 Charging, Letdown and Seal Water System

The charging and letdown functions of the CVCS are employed to maintain a programmed water level in the RCS pressurizer, thus maintaining proper reactor coolant inventory during plant operation. This is achieved by means of continuous feed and bleed process during which the feed rate is automatically controlled based on pressurizer water level. The bleed rate can be chosen to suit various plant operational requirements by selecting the proper combination of letdown orifices in the letdown flow path. Normal letdown flow consists of the flow from a single 60 gpm letdown orifice or any combination of two orifices aligned in parallel. RN 99-027

Reactor coolant is discharged to the CVCS from a reactor coolant loop crossover leg; it then flows through the shell side of the regenerative heat exchanger where its

temperature is reduced by heat transfer to the charging flow passing through the tubes. The coolant then experiences a large pressure reduction as it passes through the letdown orifice(s) and flows through the tube side of the letdown heat exchanger where its temperature is further reduced. Downstream of the letdown heat exchanger a second pressure reduction occurs. This second pressure reduction is performed by the low pressure letdown valve, the function of which is to maintain upstream pressure thus preventing flashing downstream of the letdown orifices.

The coolant then flows through one of the mixed bed demineralizers. The flow may then pass through the cation bed demineralizer which is used intermittently when additional purification of the reactor coolant is required.

From a point upstream of the reactor coolant filters, a small sample flow may be diverted from the letdown stream to the Boron Concentration Measurement System (see Section 7.7). The read-out on the boron concentration is given in the control room.

The letdown flow leaving the demineralizers may be directed to the Boron Thermal Regeneration System. The coolant then flows through the reactor coolant filter and into the volume control tank through a spray nozzle in the top of the tank. Hydrogen (from the gaseous waste processing system) is continuously supplied to the volume control tank where it mixes with fission gases which are stripped from the reactor coolant into the tank gas space. The contaminated hydrogen is vented back to the Gaseous Waste Processing System. The partial pressure of hydrogen in the volume control tank determines the concentration of hydrogen dissolved in the reactor coolant for control of oxygen produced by radiolysis of water in the core. RN 99-027

Three (3) centrifugal charging pumps are provided to take suction from the volume control tank and return the cooled, purified reactor coolant to the RCS. Normal charging flow is handled by 1 of the 3 charging pumps. This charging flow splits into 2 paths. The bulk of the charging flow is pumped back to the RCS through the tube side of the regenerative heat exchanger. The letdown flow in the shell side of the regenerative heat exchanger raises the charging flow to a temperature approaching the reactor coolant temperature. The flow is then injected into a cold leg of the RCS. Two (2) charging paths are provided from a point downstream of the regenerative heat exchanger. A flow path is also provided from the regenerative heat exchanger outlet to the pressurizer spray line. An air operated valve in the spray line is employed to provide auxiliary spray to the vapor space of the pressurizer during plant cooldown. This provides a means of cooling the pressurizer near the end of plant cooldown, when the reactor coolant pumps, which normally provide the driving head for the pressurizer spray, are not operating.

A portion of the charging flow is directed to the reactor coolant pumps (nominally 8 gpm per pump) through a seal water injection filter. It is directed down to a point between the pump shaft bearing and the thermal barrier cooling coil. Here the flow splits and a portion (nominally 5.5 gpm per pump) enters the RCS through the labyrinth seals and thermal barrier. The remainder of the flow is directed up the pump shaft, cooling the RN 14-043

lower bearing, and to the RCP seal. The seal controlled bleed-off flow discharges to a common manifold, exits from the containment, and then passes through the seal water return filter and the seal water heat exchanger to the suction side of the charging pumps, or by alternate path to the volume control tank. A very small portion of the seal flow leaks through the seal faces. A number 3 seal provides a final barrier to leakage of reactor coolant to the Reactor Building atmosphere. The number 3 leakoff flow is discharged to the reactor coolant drain tank in the liquid waste processing system. In situations where the charging pumps are not available, the seals can be supplied by the positive-displacement Alternate Seal Injection (ASI) Pump, which provides a total of 20 gpm (approximately 7 gpm per RCP seal) directly from the RWST. The ASI pump is powered by a dedicated NNS diesel generator and is designed to operate continuously for no less than 24 hours following a station black-out event (SBO). The ASI system is a sub-system of CVCS (Figure 9.3-16, Sheet 3) and is designed as an ASME III, Code Class 2 system (safety-related for pressure boundary integrity). The Alternate Seal Injection pump was conservatively designed and procured as an active pump, although it is not credited in station analysis which would require its function to be active.

RN 14-043

RN 14-043

RN 11-027

RN 16-018

The excess letdown path is provided as an alternate letdown path from the RCS in the event that the normal letdown path is inoperable. Reactor coolant can be discharged from a crossover leg to flow through the tube side of the excess letdown heat exchanger where it is cooled by component cooling water. Downstream of the heat exchanger a remote-manual control valve controls the letdown flow. The flow normally joins the RCP seal controlled bleed-off discharge manifold and passes through the seal water return filter and heat exchanger to the suction side of the charging pumps. The excess letdown flow can also be directed to the reactor coolant drain tank or directly into the volume control tank via a spray nozzle. When the normal letdown line is not available, the normal purification path is also not in operation. Therefore, this alternate condition would allow continued power operation for a limited period of time, dependent on RCS chemistry and activity. The excess letdown flow path is also used to provide additional letdown capability during the final stages of plant heatup. This path removes some of the excess reactor coolant due to expansion of the system as a result of the RCS temperature increase.

RN 14-043

Surges in RCS inventory due to load changes are accommodated for the most part in the pressurizer. The volume control tank provides surge capacity for reactor coolant expansion not accommodated by the pressurizer. If the water level in the volume control tank exceeds the normal operating range, a proportional controller modulates a three-way valve downstream of the reactor coolant filter to divert a portion of the letdown to the Boron Recycle System. If the high-level limit in the volume control tank is reached, an alarm is actuated in the control room and the letdown flow is completely diverted to the Boron Recycle System.

The Boron Recycle System (Section 9.3.6) receives and processes reactor coolant effluent prior to discharge to the environment or alternatively for reuse in the plant. The system decontaminates the effluent by means of demineralization and gas stripping.

RN 07-037

Low level in the volume control tank initiates makeup from the reactor makeup control system. If the reactor makeup control system does not supply sufficient makeup to keep the volume control tank level from falling to a lower level, a low alarm is actuated. Manual action may correct the situation or, if the level continues to decrease, an emergency low level signal from both level channels causes the suction of the charging pumps to be transferred to the refueling water storage tank.

9.3.4.2.2 Reactor Coolant Purification and Chemistry Control System

9.3.4.2.2.1 pH Control

The pH control chemical employed is lithium hydroxide. This chemical is chosen for its compatibility with the materials and water chemistry of borated water/stainless steel/zirconium/inconel systems. In addition, Lithium-7 is produced in the core region due to irradiation of the dissolved boron in the coolant.

The concentration of Lithium-7 in the RCS is coordinated with boron concentration for RCS pH control (Table 5.2-10). If the concentration is too high, as it may be during the early stages of a core cycle, the cation bed demineralizer may be employed in the letdown line in series operation with a mixed bed demineralizer. Lithium may also be removed via a mixed bed demineralizer which has not had its cation resin converted to the lithium form. If the concentration of Lithium-7 is too low, lithium hydroxide can be introduced into the RCS via the charging flow. The solution is prepared in the laboratory and poured into the chemical mixing tank. Reactor makeup water is then used to flush the solution to the suction manifold of the charging pumps. 99-01 99-01

9.3.4.2.2.2 Oxygen Control

During reactor startup from the cold condition, hydrazine is employed as an oxygen scavenging agent. The hydrazine solution is introduced into the RCS in the same manner as described above for the pH control agent. Hydrazine is not employed at any time other than startup from the cold shutdown state.

Dissolved hydrogen is employed to control and scavenge oxygen produced due to radiolysis of water in the core region. Sufficient partial pressure of hydrogen is maintained in the volume control tank such that the specified equilibrium concentration of hydrogen is maintained in the reactor coolant. A pressure control valve maintains a minimum pressure in the vapor space of the volume control tank. This valve can be adjusted to provide the correct equilibrium hydrogen concentration (25 to 50 cc hydrogen at STP per kilogram of water). Hydrogen is supplied from the hydrogen manifold in the gaseous processing system. RN 99-027

9.3.4.2.2.3 Reactor Coolant Purification

Mixed bed demineralizers are provided in the letdown line to provide cleanup of the letdown flow. The demineralizers remove ionic corrosion products and certain fission products. One demineralizer is in continuous service and can be supplemented

intermittently by the cation bed demineralizer, if necessary, for additional purification. The cation resin removes principally cesium and lithium isotopes from the purification flow. The second mixed bed demineralizer serves as a standby unit for use if the operating demineralizer becomes exhausted during operation.

A further cleanup feature is provided for use during residual heat removal. A remote operated valve admits a bypass flow from the Residual Heat Removal System (RHRS) into the letdown line upstream of the letdown heat exchanger. In addition, all 3 letdown orifice isolation valves may be opened at this time. The flow passes through the heat exchanger, through a mixed bed demineralizer and the reactor coolant filter to the volume control tank. The fluid is then returned to the RCS via the normal charging route. RN 99-027

Filters are provided at various locations to ensure filtration of particulate and resin fines and to protect the seals on the reactor coolant pumps.

Fission gases are removed from the reactor coolant by continuous purging of the volume control tank to the gaseous waste processing system.

9.3.4.2.3 Reactor Makeup Control System

The soluble neutron absorber (boric acid) concentration is controlled by the Boron Thermal Regeneration System and by the reactor makeup control system. The reactor makeup control system is also used to maintain proper reactor coolant inventory. In addition, for emergency boration and makeup, the capability exists to provide refueling water or 4 weight percent boric acid directly to the suction of the charging pump.

The reactor makeup control system provides a manually preselected makeup composition to the charging pump suction header or to the volume control tank. The makeup control functions are those of maintaining desired operating fluid inventory in the volume control tank and adjusting reactor coolant boron concentration for reactivity control. Reactor makeup water and boric acid solution (4 weight percent) are blended together at the reactor coolant boron concentration for use as makeup to maintain volume control tank inventory or they can be used separately to change the reactor coolant boron concentration.

A boron concentration measurement system (see Section 7.7) is provided to monitor the boron content of the reactor coolant in the letdown line. The boron concentration is indicated in the main control room.

The boric acid is stored in two boric acid tanks. Two (2) boric acid transfer pumps are provided with 1 pump normally aligned to provide boric acid to the suction header of the charging pumps, and the second pump in reserve. On a demand signal by the reactor makeup controller, the pump starts and delivers boric acid to the suction header of the charging pumps. The pump can also be used to recirculate the boric acid tank fluid.

All portions of the CVCS which normally contain concentrated boric acid solution (4 weight percent boric acid) are located within a heated area in order to maintain solution temperature at ≥ 65°F. If a portion of the system which normally contains concentrated boric acid solution is not located in a heated area, it is provided with some other means (e.g., heat tracing) to maintain solution temperature at ≥ 65°F.

The reactor makeup water pumps, taking suction from the reactor makeup water storage tank, are employed for various makeup and flushing operations throughout the systems. One of these pumps also starts on demand from the reactor makeup controller and provides flow to the suction header of the charging pumps or the volume control tank through the letdown line or spray nozzle, respectively.

During reactor operation, changes are made in the reactor coolant boron concentration for the following conditions:

1. Reactor startup - boron concentration must be decreased from shutdown concentration to achieve criticality.

2. Load follow - boron concentration must be either increased or decreased to compensate for the xenon transient following a change in load.

3. Fuel burnup - boron concentration must be decreased to compensate for fuel burnup and the buildup of fission products in the fuel.

4. Cold shutdown - boron concentration must be increased to the cold shutdown concentration.

The Boron Thermal Regeneration System can be used in conjunction with dilution operations of the reactor makeup control system to reduce the amount of effluent to be processed by the Boron Recycle System. RN 99-075

The reactor makeup control system can be set up for the following modes of operation:

1. Automatic Makeup

   The "automatic makeup" mode of operation of the reactor makeup control system provides blended boric acid solution, preset to match the boron concentration in the RCS. Automatic makeup compensates for minor leakage of reactor coolant without causing significant changes in the reactor coolant boron concentration.

   Under normal plant operating conditions, the mode selector switch is set in the "automatic makeup" position. This switch position establishes a preset control signal to the total makeup flow controller and establishes positions for the makeup stop valves for automatic makeup. The boric acid flow controller is set to blend to the same concentration of borated water as is contained in the RCS. A preset low level signal from the volume control tank level controller causes the automatic

makeup control action to start a reactor makeup water pump, start a boric acid transfer pump, open the makeup stop valve to the charging pump suction, and position the boric acid flow control valve and the reactor makeup water flow control valve. The flow controllers then blend the makeup stream according to the preset concentration. Makeup addition to the charging pump suction header causes the water level in the volume control tank to rise. At a preset high level point, the makeup is stopped. This operation may be terminated manually at any time.

If the automatic makeup fails or is not aligned for operation and the tank level continues to decrease, a low level alarm is actuated. Manual action may correct the situation or, if the level continues to decrease, an emergency low level signal opens the stop valves in the refueling water supply line to the charging pumps, and closes the stop valves in the volume control tank outlet line.

2. Dilution

The "dilute" mode of operation permits the addition of a preselected quantity of reactor makeup water at a preselected flowrate to the RCS. The operator sets the mode selector switch to "dilute," the total makeup flow controller setpoint to the desired flowrate, the total makeup batch integrator to the desired quantity and initiates system start. This opens the reactor makeup water flow control valve, opens the makeup stop valve to the volume control tank inlet, and starts a reactor makeup water pump. Excessive rise of the volume control tank water level is prevented by automatic actuation (by the tank level controller) of a three-way diversion valve which routes the reactor coolant letdown flow to the boron recycle system. When the present quantity of water has been added, the batch integrator causes makeup to stop. Also, the operation may be terminated manually at any time.

Dilution can also be accomplished by operating the boron thermal regeneration system in the boron storage mode.

3. Alternate Dilution

The "alternate dilute" mode of operation is similar to the dilute mode except a portion of the dilution water flows directly to the charging pump suction and a portion flows into the volume control tank via the spray nozzle and then flows to the charging pump suction. This decreases the delay in diluting the RCS caused by directing dilution water to the volume control tank.

4. Boration

The "borate" mode of operation permits the addition of a preselected quantity of concentrated boric acid solution at a preselected flowrate to the RCS. The operator sets the mode selection switch to "borate," the concentrated boric acid flow controller setpoint to the desired flowrate, the concentrated boric acid batch

integrator to the desired quantity, and initiates system start. This opens the makeup stop valve to the charging pumps suction, positions the boric acid flow control valve, and starts the selected boric acid transfer pump, which delivers a 4 weight percent boric acid solution to the charging pumps suction header. The total quantity added in most cases is so small that it has only a minor effect on the volume control tank level. When the preset quantity of concentrated boric acid solution is added, the batch integrator causes makeup to stop. Also, the operation may be terminated manually at any time.

RN 99-075

5. Manual

The "manual" mode of operation permits the addition of a preselected quantity and blend of boric acid solution to the refueling water storage tank, to the recycle holdup tanks in the Boron Recycle System, or to some other location via a temporary connection. While in the manual mode of operation, automatic makeup to the RCS is precluded. The discharge flow path must be prepared by opening manual valves in the desired path.

The operator sets the mode selector switch to "manual," the boric acid and total makeup flow controllers to the desired flowrates, the boric acid and total makeup batch integrators to the desired quantities, and actuates the makeup start switch.

The start switch actuates the boric acid flow control valve and the reactor makeup water flow control valve and starts the preselected reactor makeup water pump and boric acid transfer pump.

When the preset quantities of boric acid and reactor makeup water have been added, the batch integrators cause makeup to stop. This operation may be stopped manually by actuating the makeup stop switch.

If either batch integrator is satisfied before the other has recorded its required total, the pump and valve associated with the integrator which has been satisfied will terminate flow. The flow controlled by the other integrator will continue until the integrator is satisfied. In the manual mode, the boric acid flow is terminated first to prevent piping systems from remaining filled with 4 weight percent boric acid solution.

The quantities of boric acid and reactor makeup water injected are totalized by the batch counters and the flowrates are recorded on strip recorders. Deviation alarms sound for both boric acid and reactor makeup water if flowrates deviate from setpoints.

9.3.4.2.4 Boron Thermal Regeneration System

Downstream of the mixed bed demineralizers, the letdown flow can be diverted to the Boron Thermal Regeneration System (BTRS) for processing when boron concentration reductions are desired. The BRTS can process any letdown flow rate up to the maximum design flow rate of 120 gpm. Part or all of the letdown flow can be directed through the thermal regeneration demineralizers for processing. After processing, the flow is returned to a point upstream of the reactor coolant filter. RN 99-027 99-075

The boron concentration measurement system (see Section 7.7) can be used to monitor the boron content in the letdown stream prior to placing the Boron Thermal Regeneration System in service; or, it can monitor the adjusted boron content of the letdown stream after it has been treated by the thermal regeneration process.

Storage of boron is determined by the temperature of fluid entering the thermal regeneration demineralizers. A chiller unit and a group of heat exchangers are employed to provide the desired fluid temperatures at the demineralizer inlets. RN 99-075

During boron storage, the letdown stream enters the moderating heat exchanger and from there it passes through the letdown chiller heat exchanger. These two heat exchangers cool the letdown stream prior to its entering the demineralizers. The letdown reheat heat exchanger is permanently piped out of service on the tube side and performs no function. The temperatures of the letdown stream at the point of entry to the demineralizers is controlled automatically by the temperature control valve which controls the shell side flow to the letdown chiller heat exchanger. After passing through the demineralizers, the letdown enters the moderating heat exchanger shell side, where it is heated by the incoming letdown stream before going to the volume control tank. RN 99-075

Therefore, for boron storage, a decrease in the boric acid concentration in the reactor coolant is accomplished by sending the letdown flow at relatively low temperatures to the thermal regeneration demineralizers. Reactor coolant with a decreased concentration of boric acid leaves the demineralizers and is directed to the RCS via the charging system.

As an additional function, a thermal regeneration demineralizer can be used as a deborating demineralizer, which would be used to dilute the RCS down to very low boron concentrations towards the end of a core cycle. To make such a bed effective, the effluent concentration from the bed must be kept very low, close to zero ppm boron. This low effluent concentration can be achieved by using fresh resin. Use of fresh resin can be coupled with the normal replacement cycle of the resin; one resin bed being replaced during each core cycle. RN 99-075

9.3.4.2.5 Component Description

A summary of principal component design parameters is given in Table 9.3-5, and safety classifications and design codes are given in Section 3.2.

In addition, portions of the system that are required to carry ECCS fluid outside containment during the recirculation phase of ECCS operation are designed to minimize leakage to the atmosphere as described in Section 6.3.2.11.3. RN 04-005

9.3.4.2.5.1 Piping

CVCS piping that handles radioactive liquid is austenitic stainless steel. Piping joints and connections are welded, except where flanged connections are required to facilitate equipment removal for maintenance and hydrostatic testing.

9.3.4.2.5.2 Charging Pumps

Three (3) charging pumps of the single speed, horizontal, centrifugal type are supplied to inject coolant into the RCS. One (1) pump is normally running, 1 is a nonrunning pump and the third is a spare with its breaker(s) normally racked out. The third pump can be used as a replacement if 1 of the other pumps is out of service. Parts in contact with the reactor coolant are fabricated of austenitic stainless steel or other material of adequate corrosion resistance. There is a minimum flow recirculation line to protect the centrifugal charging pumps from a closed discharge valve condition. The component cooling water cooling flow to the charging pump lube oil system is established through the air operated component cooling water valves which open when the charging pumps start.

Charging flowrate is determined from a pressurizer level signal. When operating a centrifugal charging pump, charging flow control is accomplished by a modulating valve on the discharge side of the centrifugal pumps. The centrifugal charging pumps also serve as high-head safety injection pumps in the Emergency Core Cooling System.

9.3.4.2.5.3 Boric Acid Transfer Pumps

Two (2) canned motor pumps are supplied. One (1) pump is normally aligned to supply boric acid to the suction header of the charging pumps while the second serves as a standby. Manual or automatic initiation of the reactor coolant makeup system will start the aligned pump to provide normal makeup of boric acid solution to the suction header of the charging pumps. Miniflow from this pump flows back to the associated boric acid tank and helps maintain thermal equilibrium. The standby pump can be used intermittently to circulate boric acid solution through the other tank to maintain thermal equilibrium in this part of the system. Emergency boration, supplying 4 weight percent boric acid solution directly to the suction of the charging pumps, can be accomplished by manually starting either or both pumps. The transfer pumps also function to transfer boric acid solution from the batching tank to the boric acid tanks.

The pumps are located in a heated area to prevent crystallization of the boric acid solutions. Parts in contact with the solution are of austenitic stainless steel.

9.3.4.2.5.4 BTRS Chiller Pumps

These centrifugal pumps circulate the water through the chilled water loop in the Boron Thermal Regeneration System. One (1) pump is normally operated, with the second serving as a standby.

9.3.4.2.5.5 Regenerative Heat Exchanger

The regenerative heat exchanger is designed to recover heat from the letdown flow by reheating the charging flow, which reduces thermal effects on the charging penetrations into the reactor coolant loop piping.

The letdown stream flows through the shell of the regenerative heat exchanger and the charging stream flow through the tubes. The unit is constructed of austenitic stainless steel, and is of all welded construction.

The temperatures of both outlet streams from the heat exchanger are monitored with indication given in the control room. A high temperature alarm is actuated on the main control board if the temperature of the letdown stream exceeds desired limits.

9.3.4.2.5.6 Letdown Heat Exchanger

The letdown heat exchanger cools the letdown stream to the operating temperature of the mixed bed demineralizers. Reactor coolant flows through the tube side of the exchanger while component cooling water flows through the shell side. Surfaces in contact with the reactor coolant are austenitic stainless steel, and the shell is carbon steel.

The low pressure letdown valve, located downstream of the heat exchanger, maintains the pressure of the letdown flow upstream of the heat exchanger in a range sufficiently high to prevent two phase flow. Pressure indication and high pressure alarm are provided on the main control board.

The letdown temperature control indicates and controls the temperature of the letdown flow exiting from the letdown heat exchanger. A temperature sensor, which is part of the CVCS, provides input to the controller in the Component Cooling Water System. The exit temperature of the letdown stream is thus controlled by regulating the component cooling water flow through the letdown heat exchanger. Temperature indication is provided on the main control board. If the outlet temperature from the heat exchanger is excessive, a high temperature alarm is actuated and a temperature controlled valve diverts the letdown directly to the volume control tank.

9.3.4.2.5.7 Excess Letdown Heat Exchanger

The excess letdown heat exchanger cools reactor coolant letdown flow at a rate which is equivalent to the portion of the nominal seal injection flow which flows into the RCS through the reactor coolant pump labyrinth seals.

The excess letdown heat exchanger can be employed either when normal letdown is temporarily out of service to maintain inventory control in the RCS or it can be used to supplement maximum letdown during heatup. The letdown flows through the tube side f the unit and component cooling water is circulated through the shell. Surfaces in contact with reactor coolant are austenitic stainless steel and the shell is carbon steel. Tube joints are welded. A temperature detector measures the temperature of the excess letdown flow downstream of the excess letdown heat exchanger. Temperature indication and high temperature alarm are provided on the main control board. RN 99-027

A pressure sensor indicates the pressure of the excess letdown flow downstream of the excess letdown heat exchanger and excess letdown control valve. Pressure indication is provided on the main control board.

9.3.4.2.5.8 Seal Water Heat Exchanger

The seal water heat exchanger is designed to cool fluid from 3 sources: reactor coolant pump controlled bleed-off flow, reactor coolant discharged from the excess letdown heat exchanger, and miniflow from a centrifugal charging pump. Reactor coolant flows through the tube side of the heat exchanger and component cooling water is circulated through the shell. The seal water heat exchanger is sized for a design basis case, for which the flowrate through the tube side is equal to maximum design reactor coolant pump seal leakage and miniflow from two centrifugal charging pumps. The heat exchanger is also sized for an alternate case, for which the flowrate through the tube side is equal to the sum of the nominal excess letdown flow, maximum design reactor coolant pump seal leakage, and miniflow from one centrifugal charging pump. The unit is designed to cool the above flows to the temperature normally maintained in the volume control tank. Surfaces in contact with reactor coolant are austenitic stainless steel and the shell is carbon steel. RN 14-043 00-01 00-01

9.3.4.2.5.9 Moderating Heat Exchanger

The moderating heat exchanger operates as a regenerative heat exchanger between incoming and outgoing streams to and from the thermal regeneration demineralizers.

The incoming flow enters the tube side of the moderating heat exchanger. The shell side fluid, which comes directly from the demineralizers, enters at low temperature during boron storage. The unit is constructed of austenitic stainless steel. RN 99-075

9.3.4.2.5.10 Letdown Chiller Heat Exchanger

During the boron storage operation, the process stream enters the tube side of the letdown chiller heat exchanger after leaving the tube side of the moderating heat exchanger. The letdown chiller heat exchanger cools the process stream to allow the thermal regeneration demineralizers to remove boron from the coolant. The desired cooling capacity is adjusted by controlling the chilled water flowrate passed through the shell side of the heat exchanger.

The letdown chiller heat exchanger surfaces in contact with reactor coolant are austenitic stainless steel and the shell is carbon steel. RN 99-075

9.3.4.2.5.11 Letdown Reheat Heat Exchanger

The letdown reheat heat exchanger is no longer used. RN 99-075

9.3.4.2.5.12 Volume Control Tank

The volume control tank provides surge capacity for part of the reactor coolant expansion volume not accommodated by the pressurizer. When the level in the tank reaches the high level setpoint, the remainder of the expansion volume is accommodated by diversion of the letdown stream to the Boron Recycle System. The tank also provides a means for introducing hydrogen into the coolant to maintain the required equilibrium concentration and is used for degassing the reactor coolant. It also serves as a head tank for the charging pumps.

A spray nozzle located inside the tank on the letdown line provides liquid to gas contact between the incoming fluid and the hydrogen atmosphere in the tank.

The tank is constructed of austenitic stainless steel.

Hydrogen (from the hydrogen manifold in the gaseous waste processing system) is continuously supplied to the volume control tank while a remotely operated vent valve, discharging to the gaseous waste processing system, permits continuous removal of gaseous fission products which are stripped from the reactor coolant and collected in this tank. Relief protection, gas space sampling, and nitrogen purge connections are also provided. The tank also accepts the seal water return flow from the reactor coolant pumps; this flow can be routed directly to the suction of the charging pumps.

Volume control tank pressure is monitored with indication given in the control room. Alarm is actuated in the control room for high and low pressure conditions. 98-01

Two (2) level channels govern the water inventory in the volume control tank. Level indication with high and low alarms is provided on the main control board for one channel and local level indication is provided for the other channel.

If the volume control tank level rises above the normal operating range, 1 level channel provides an analog signal to the proportional controller which modulates the three-way valve downstream of the reactor coolant filter to maintain the volume control tank level within the normal operating band. The three-way valve can split letdown flow so that a portion goes to the Boron Recycle System and a portion to the volume control tank. The controller would operate in this fashion during a dilution operation when reactor makeup water is being fed to the volume control tank from the reactor makeup control system.

If the modulating function of the channel fails and the volume control tank level continues to rise, the high level alarm will alert the operator to the malfunction and the full letdown flow will be automatically diverted by the backup level channel.

During normal power operation, a low level in the volume control tank initiates auto makeup which injects a preselected blend of boric acid solution and reactor makeup water into the charging pump suction header. When the volume control tank level is restored to normal, auto makeup stops.

If the automatic makeup fails and the tank level continues to decrease, a low level alarm is actuated. Manual action may correct the situation or, if the level continues to decrease, a low-low signal from both level channels opens the stop valves in the refueling water supply line, and closes the stop valves in the volume control tank outlet line.

9.3.4.2.5.13 Boric Acid Tanks

The combined boric acid tank capacity is sized to store sufficient boric acid solution for refueling plus enough for a cold shutdown from full power operation immediately following refueling with the most reactive control rod not inserted.

The concentration of boric acid solution in storage is maintained between 7000 and 7700 ppm. Periodic manual sampling and corrective action, if necessary, assure that these limits are maintained. As a consequence, measured amounts of boric acid solution can be delivered to the reactor coolant to control the boron concentration. 00-01

A temperature sensor provides temperature measurement of each tank's contents. Temperature indication as well as high and low temperature alarms are provided locally.

Three (3) level detectors indicate the level in each boric acid tank. Redundant level indication with high, low, low-low and empty level alarms is provided on the main control board for each tank. The high alarm indicates that the tank may soon overflow. The low alarm warns the operator to start makeup to the tank. The low-low alarm is set to indicate the minimum level of boric acid in the tank to ensure sufficient boric acid is available for a cold shutdown with one stuck rod. The empty level alarm is set to give warning of loss of pump suction.

9.3.4.2.5.14 Batching Tank

The batching tank is used for mixing a makeup supply of boric acid solution for transfer to the boric acid tanks.

A local sampling point is provided for verifying the solution concentration prior to transferring it out of the tank. The tank is provided with an agitator to improve mixing during batching operations and a steam jacket for heating the boric acid solution.

9.3.4.2.5.15 Chemical Mixing Tank

The primary use of the chemical mixing tank is in the preparation of caustic solutions for pH control and hydrazine solution for oxygen scavenging.

9.3.4.2.5.16 BTRS Chiller Surge Tank

The BTRS chiller surge tank handles the thermal expansion and contraction of the water in the chiller loop. The surge volume in the tank also acts as a thermal buffer for the chiller. The fluid level in the tank is monitored with level indication and high and low level alarms provided on the main control board.

9.3.4.2.5.17 Mixed Bed Demineralizers

Two (2) flushable mixed bed demineralizers assist in maintaining reactor coolant purity. A hydrogen-form cation resin and a hydroxyl-form anion resin are charged into the demineralizers. The cation resin is converted to lithium-form and the anion resin is converted to the borate form in operation. Both types of resin remove fission and corrosion products. The resin bed is designed to reduce the concentration of ionic isotopes in the purification stream, except for cesium, yttrium and molybdenum, by a minimum factor of 10.

Each demineralizer has more than sufficient capacity for 1 core cycle with 1% of the rated core thermal power being generated by failed fuel. One (1) demineralizer is normally in service with the other in standby.

A temperature sensor monitors the temperature of the letdown flow downstream of the letdown heat exchanger and if the letdown temperature exceeds the maximum allowable resin operating temperature (approximately 140°F), a three-way valve is automatically actuated to bypass the flow around the demineralizers. Temperature indication and high alarm are provided on the main control board. The air operated three-way valve failure mode directs flow to the volume control tank.

9.3.4.2.5.18 Cation Bed Demineralizer

A flushable demineralizer with cation resin in the hydrogen form is located downstream of the mixed bed demineralizers and is used intermittently to control the concentration of Li^7 which builds up in the coolant from the B^{10} (n, α) Li^7 reaction. The demineralizer also has sufficient capacity to maintain the Cesium-137 concentration in the coolant below the value listed in Table 11.1-2. The resin bed is designed to reduce the concentration of ionic isotopes, particularly cesium, yttrium, and molybdenum by a minimum factor of 10. The demineralizer is sized to accommodate a letdown flow rate of 60 gpm when in service, which is more than adequate to control Li^7 or cesium in the RCS. Any letdown flow in excess of 60 gpm is diverted through the bypass line around the cation bed demineralizer. 02-01 00-01 RN 99-027

The demineralizer has more than sufficient capacity for 1 core cycle with 1% of the rated core thermal power being generated by failed fuel.

9.3.4.2.5.19 Thermal Regeneration Demineralizers

The function of the thermal regeneration demineralizers was to store the total amount of boron that must be removed from the RCS to accomplish the required dilution during a load cycle in order to compensate for xenon buildup resulting from a decreased power level. Furthermore, the demineralizers were able to release the previously stored boron to accomplish the required boration of the reactor coolant during the load cycle in order to compensate for a decrease in xenon concentration resulting from an increased power level. The load following capabilities of the thermal regeneration demineralizers was removed by plant modification MRF 21511. The resins continue to be used to store boron. However, the boron release feature of the system has been disabled. RN 99-075

The thermal regeneration demineralizer resin capacity is directly proportional to the solution boron concentration and inversely proportional to the temperature. Further, the differences in capacity as a function of both boron concentration and temperature are reversible.

RN 99-075

Temperature instrumentation is provided upstream of the thermal regeneration demineralizers to control the temperature of the process flow. During boron storage operations, it controls the flow through the shell side of the letdown chiller heat exchanger to maintain the process flow at 50°F as it enters the demineralizers. Temperature indication and a high temperature alarm are provided on the main control board.

RN 99-075

An additional temperature instrument is provided to protect the demineralizer resins from a high temperature condition. On reaching the high temperature setpoint, an alarm is sounded on the main control board and the letdown flow is diverted to the volume control tank from a point upstream of the mixed bed demineralizers.

Failure of the temperature controls resulting in hot water flow to the demineralizers would result in a release of boron stored on the resin with a resulting increase in reactor coolant boron concentration and increased margin for shutdown. If the temperature of the resin rises significantly above 140°F, the number of ion storage sites will gradually decrease, thus reducing the capability of the resin to remove boron from the process stream. Degradation of ion removal capability will occur for temperatures of approximately 160°F and above. The extent of the degradation and rate at which it will occur depend upon the temperature experienced by the resin and the length of time that the resin experiences this elevated temperature.

Failure of the temperature control system resulting in cold water flow to the demineralizers would result in storage of boron on the resin and reduction of the reactor coolant boron concentration. The amount of reduction in reactor coolant boron concentration is limited by the capacity of the resin to remove boron from the water. As the boron concentration is reduced, the control rods would be driven into the core to maintain power level. If the rods were to reach the shutdown limit setpoint, an alarm would be actuated informing the operator that emergency boration of the RCS is necessary in order to maintain capability of shutting the reactor down with control rods alone.

9.3.4.2.5.20 Reactor Coolant Filter

The reactor coolant filter is located in the letdown line upstream of the volume control tank. The filter collects resin fines and particulates from the letdown stream. The flow capacity of the filter is designed to accept the maximum purification flowrate.

Two (2) local pressure indicators are provided to show the pressures upstream and downstream of the reactor coolant filter and thus provide filter differential pressure.

9.3.4.2.5.21 Seal Water Injection Filters

Two (2) seal water injection filters are located in parallel in a common line to the reactor coolant pump seals; they collect particulate matter that could be harmful to the seal faces. Each filter is sized to accept flow in excess of the normal seal water flow requirements.

A differential pressure indicator monitors the pressure drop across each seal water injection filter and gives local indication with high differential pressure alarm on the main control board.

9.3.4.2.5.22 Seal Water Return Filter

This filter collects particulates from the reactor coolant pump seal water return and from the excess letdown flow. The filter is designed to pass the sum of the excess letdown flow and the maximum design seal leakage from all reactor coolant pumps.

Two (2) local pressure indicators are provided to show the pressures upstream and downstream of the filter and thus provide differential pressure across the filter.

9.3.4.2.5.23 Boric Acid Filter

The boric acid filter collects particulates from the boric acid solution being pumped from the boric acid tanks by the boric acid transfer pumps. The filter is designed to pass the design flow of 2 boric acid transfer pumps operating simultaneously.

Local pressure indicators indicate the pressure upstream and downstream of the boric acid filter and thus provide filter differential pressure.

9.3.4.2.5.24 Letdown Orifices

Three (3) letdown orifices are provided to reduce the letdown pressure from reactor conditions and to control the flow of reactor coolant leaving the RCS. The orifices are placed into or out of service by remote operation of their respective isolation valves. Normal letdown ranges from 60 to 120 gpm and is obtained by placing one 60 gpm orifice or any combination of two orifices aligned in parallel. All 3 orifices may be used in parallel for either flow control when the RCS pressure is less than normal or greater letdown flow during maximum purification or heatup. Each orifice consists of an assembly which provides for permanent pressure loss without recovery, and is made of austenitic stainless steel or other adequate corrosion resistant material. RN 99-027

A flow monitor provides indication in the control room of the letdown flowrate, and a high alarm to indicate unusually high flow.

A low pressure letdown controller located downstream of the letdown heat exchanger controls the pressure upstream of the letdown heat exchanger to prevent flashing of the letdown liquid. Pressure indication and high pressure alarm are provided on the main control board.

9.3.4.2.5.25 Number 1 Seal Bypass Orifices

Number 1 Seal bypass flow was necessary for Westinghouse RCP seal to ensure adequate flow for cooling of the pump's lower radial bearing and to limit the temperature rise of the water cooling the number 1 seal during startup or shutdown when the RCS pressure was low. The number 1 seal bypass orifice is constructed of austenitic stainless steel and designed to pass adequate flow for the differential pressure existing at the lowest allowable RCS pressure for reactor coolant pump operation. The Westinghouse RCP seals were replaced with N-9000 seals which have sufficient cooling flow at low RCS pressure. Therefore the bypass flow is no longer required. The number 1 seal bypass orifices remain in the piping system but the downstream piping is capped. RN 14-043

9.3.4.2.5.26 Boric Acid Blender

The boric acid blender, made of austenitic stainless steel, is provided to ensure thorough mixing of the 4 weight percent solution of boric acid and reactor makeup water when required. The blender is designed to pass the maximum letdown flow.

9.3.4.2.5.27 DELETED RN 14-043

9.3.4.2.5.28 BTRS Chiller

The BTRS chiller is located in a chilled water loop containing a surge tank, chiller pumps, the letdown chiller heat exchanger, piping, valves and controls.

The purpose of the chiller is to cool down the process stream during storage of boron on the resin. RN 99-075

9.3.4.2.5.29 Valves

Where pressure and temperature conditions permit, diaphragm type valves are used to essentially eliminate leakage to the atmosphere. Packed valves which are larger than 2 inches and which are designated for radioactive services are provided with a stuffing box and lantern leakoff connections. Design requirements for zero-leakage valves and dual vent and drain isolation, described in Section 6.3.2.11.3 apply to valves 2 inches and smaller located in portions of the system designed to carry ECCS fluid outside containment during post-LOCA recirculation. Control (modulating) and three-way valves are either provided with stuffing box and leakoff connections or are totally enclosed. Leakage to the atmosphere is essentially 0 for these valves. Basic material of construction is stainless steel for valves which handle radioactive liquid or boric acid solutions. RN 04-005

Relief valves are provided for lines and components that might be pressurized above design pressure by improper operation or component malfunction.

1. Charging Line Downstream of Regenerative Heat Exchanger

   If the charging side of the regenerative heat exchanger is isolated while the hot letdown flow continues at its maximum rate, the volumetric expansion of coolant on the charging side of the heat exchanger is relieved to the RCS through a spring loaded check valve.

2. Letdown Line Downstream of Letdown Orifices

   The pressure relief valve downstream of the letdown orifices protects the low pressure piping and the letdown heat exchanger from overpressure when the low pressure piping is isolated. The capacity of the relief valve is equal to the maximum flowrate through all letdown orifices. The valve set pressure is equal to the design pressure of the letdown heat exchanger tube side. 99-01

3. Letdown Line Downstream of Low Pressure Letdown Valve

   The pressure relief valve downstream of the low pressure letdown valve protects the low pressure piping and equipment from overpressure when this section of the system is isolated. The overpressure may result from leakage through the low pressure letdown valve. The capacity of the relief valve exceeds the maximum flowrate through all letdown orifices. The valve set pressure is equal to the design pressure of the demineralizers.

4. Volume Control Tank

   The relief valve on the volume control tank permits the tank to be designed for a lower pressure than the upstream equipment. This valve has a capacity equal to the summation of the following items: maximum letdown, normal seal water return, excess letdown and nominal flow from one reactor makeup water pump. The valve set pressure equals the design pressure of the volume control tank.

5. Charging Pump Suction

   A relief valve on the charging pump suction header relieves pressure that may build up if the suction line isolation valves are closed or if the system is overpressurized. The valve set pressure is equal to the design pressure of the associated piping and equipment.

6. Seal Water Return Line (Inside Reactor Building)

This relief valve is designed to relieve overpressurization in the seal water return piping inside the Reactor Building if the motor operated isolation valve is closed. The valve is designed to relieve the total controlled bleed-off flow of the reactor coolant pump seals plus the design excess letdown flow. The valve is set to relieve at the design pressure of the piping. RN 14-043

7. Seal Water Return Line (Charging Pumps Bypass Flow)

This relief valve protects the seal water heat exchanger and its associated piping from overpressurization. If either of the isolation valves for the heat exchanger are closed and if the bypass line is closed, the piping would be overpressurized by the miniflow from the centrifugal charging pumps. The valve is sized to handle the design basis flowrate of the Excess Letdown Heat Exchanger, the fluid from the reactor coolant pump seals returning to the volume control tank, and the miniflow from two operating centrifugal charging pumps, which bounds that of the Seal Water Heat Exchanger. The valve is set to relieve at the design pressure of the heat exchanger. 00-01

8. Letdown Reheat Heat Exchanger

The relief valve is located on the piping leading from the shell side of the heat exchanger. If the shell side were filled with cold water and isolated, overpressurization could occur when the water warms to room temperature. The valve is set to relieve at the design pressure of the heat exchanger shell side. RN 99-075

9. Letdown Chiller Heat Exchanger

The relief valve is located on the piping leading from the shell side of the heat exchanger. If the shell side were isolated while flow was maintained in the tube side, overpressurization could occur. The valve is set to relieve at the design pressure of the heat exchanger shell side.

10. Steam Line to Batching Tank

The relief valve on the steam line to the batching tank protects the low pressure piping and batching tank heating jacket from overpressure when the condensate return line is isolated. The capacity of the relief valve equals the maximum expected steam inlet flow. The set pressure equals the design pressure of the heating jacket.

9.3.4.2.6 System Operation

9.3.4.2.6.1 Reactor Startup

Reactor startup is defined as the operations which bring the reactor from cold shutdown to normal operating temperature and pressure.

It is assumed that:

1. Normal residual heat removal is in progress.

2. RCS boron concentration is at the cold shutdown concentration.

3. Reactor makeup control system is set to provide makeup at the cold shutdown concentration.

4. RCS is either water solid or drained to minimum level for the purpose of refueling or maintenance. If the RCS is water solid, system pressure is maintained by operation of a charging pump and controlled by the low pressure letdown valve in the letdown line (letdown is achieved via the low pressure letdown connection from the residual heat removal system, as well as one or more letdown orifices). RN 99-027

5. The charging and letdown lines of the CVCS are filled with coolant at the cold shutdown boron concentration. The letdown orifice isolation valves are closed.

If the RCS requires filling and venting, the procedure is as follows:

1. One (1) charging pump is started, which provides blended flow from the reactor makeup control system at the cold shutdown boron concentration.

2. The vents on the head of the reactor vessel and pressurizer are opened.

3. The RCS is filled and the vents closed.

The system pressure is raised by using the charging pump and controlled by the low pressure letdown valve. When the system pressure is adequate for operation of the reactor coolant pumps, seal water flow to the pumps is established and the pumps are operated and vented sequentially until all gases are cleared from the system. Final venting takes place at the pressurizer.

After the filling and venting operations are completed, charging and letdown flows are established. All pressurizer heaters are energized and the reactor coolant pumps are employed to heatup the system. After the reactor coolant pumps are started, the residual heat removal pumps are stopped but pressure control via the Residual Heat Removal System (RHRS) and the low pressure letdown line is continued as the pressurizer steam bubble is formed. At this point, steam formation in the pressurizer is accomplished by manual control of the charging flow and low pressure letdown valve with all letdown orifices open. When the pressurizer water level reaches the no-load programmed setpoint, the pressurizer level control is shifted to control the charging flow to maintain programmed level. The RHRS is then isolated from the RCS and the normal letdown path is established. The pressurizer heaters are used to increase RCS pressure.

The reactor coolant boron concentration is now reduced by operating the reactor makeup control system in the "dilute" mode. The reactor coolant boron concentration is corrected to the point where the control rods may be withdrawn and criticality achieved. Nuclear heatup may then proceed with corresponding manual adjustment of the reactor coolant boron concentration to balance the temperature coefficient effects and maintain the control rods within their operating range. During heatup, the appropriate combination of letdown orifices is used to provide necessary letdown flow. RN 99-075

Prior to or during the heating process, the CVCS is employed to obtain the correct chemical properties in the RCS. The reactor makeup control system is operated on a continuing basis to ensure correct control rod position. Chemicals are added through the chemical mixing tank as required to control reactor coolant chemistry such as pH and dissolved oxygen content. Hydrogen overpressure is established in the volume control tank to assure the appropriate hydrogen concentration in the reactor coolant.

9.3.4.2.6.2 Power Generation and Hot Standby Operation

1. Base Load

   At a constant power level, the rates of charging and letdown are dictated by the requirements for seal water to the reactor coolant pumps and the normal purification of the RCS. One (1) charging pump is employed and charging flow is controlled automatically from pressurizer level. The only adjustments in boron concentration necessary are those to compensate for core burnup. These adjustments are made at infrequent intervals to maintain the control groups within their allowable limits. Rapid variations in power demand are accommodated automatically by control rod movement. If variations in power level occur, and the new power level is sustained for long periods, some adjustment in boron concentration may be necessary to maintain the control groups within their maneuvering band.

During normal operation, normal letdown flow (60 to 120 gpm) is maintained and 1 mixed bed demineralizer is in service. Reactor coolant samples are taken periodically to check boron concentration, water quality, pH and activity level. The charging flow to the RCS is controlled automatically by the pressurizer level control signal through the discharge header flow control valve. RN 99-027

2. Load Follow

A power reduction will initially cause a xenon buildup followed by xenon decay to a new, lower equilibrium value. The reverse occurs if the power level increases; initially, the xenon level decreases and then it increases to a new and higher equilibrium value associated with the amount of the power level change.

The reactor makeup control system is used to vary the boron concentration in the reactor coolant to compensate for xenon transients occurring when reactor power is changed. RN 99-075

The most important intelligence available to the plant operator, enabling him to determine whether dilution or boration of the RCS is necessary, is the position of the control rods. For example, if the control rods are below their desired position, the operator must borate the reactor coolant to bring the rods outward. If, on the other hand, the control rods are above their desired position, the operator must dilute the reactor coolant to bring the rods inward.

During periods of plant loading, the reactor coolant expands as its temperature rises. The pressurizer absorbs this expansion as the level controller raises the level setpoint to the increased level associated with the new power level. The excess coolant due to RCS expansion is letdown and stored in the volume control tank. During this period, the flow through the letdown orifice remains constant and the charging flow is reduced by the pressurizer level control signal, resulting in an increased temperature at the regenerative heat exchanger outlet. The temperature controller downstream from the letdown heat exchanger increases the component cooling water flow to maintain the desired letdown temperature.

During periods of plant unloading, the charging flow is increased to make up for the coolant contraction not accommodated by the programmed reduction in pressurizer level.

3. Hot Standby

If required, for periods of maintenance, or following spurious reactor trips, the reactor can be held subcritical, but with the capability to return to full power within the period of time it takes to withdraw control rods. During this hot standby period, temperature is maintained at no-load T_{avg} by initially dumping steam to remove core residual heat, or at later stages, by running reactor coolant pumps to maintain system temperature.

Following shutdown, xenon buildup occurs and increases the degree of shutdown; i.e., initially, with initial xenon concentration and all control rods inserted, the core is maintained at a minimum of 1% $\Delta k/k$ subcritical. The effect of xenon buildup is to increase this value to a maximum of about 3% $\Delta k/k$ at about 8 hours following shutdown from equilibrium full power conditions. If hot standby is maintained past this point, xenon decay results in a decrease in degree of shutdown. Since the value of the initial xenon concentration is about 3% $\Delta k/k$ (assuming that an equilibrium concentration had been reached during operation), boration of the reactor coolant is necessary to counteract the xenon decay and maintain shutdown.

If a rapid recovery is required, dilution of the system may be performed to counteract this xenon buildup. However, after the xenon concentration reaches a peak, boration must be performed to maintain the reactor subcritical as the xenon decays out.

4. Cold Shutdown

Cold shutdown is the operation which takes the reactor from hot shutdown conditions to cold shutdown conditions (reactor is subcritical by at least 1% $\Delta k/k$ and $T_{avg} \leq 200°F$).

Before initiating a cold shutdown, the RCS hydrogen concentration is lowered by reducing the volume control tank overpressure, by replacing the volume control tank hydrogen atmosphere with nitrogen, and by continuous purging to the gaseous waste processing system.

Before cooldown and depressurization of the reactor plant is initiated, the reactor coolant boron concentration is increased to the cold shutdown value. After the boration is completed and reactor coolant samples verify that the concentration is correct, the operator resets the reactor makeup control system for leakage makeup and system contraction at the shutdown reactor coolant boron concentration.

Contraction of the coolant during cooldown of the RCS results in actuation of the pressurizer level control to maintain normal pressurizer water level. The charging flow is increased, relative to letdown flow, and results in a decreasing volume control tank level. The volume control tank level controller automatically initiates makeup to maintain the inventory.

After the RHRS is placed in service and the reactor coolant pumps are shutdown, further cooling of the pressurizer liquid is accomplished by charging through the auxiliary spray line. Coincident with plant cooldown, a portion of the reactor coolant flow is diverted from the RHRS to the CVCS for cleanup. Demineralization of ionic radioactive impurities and stripping of fission gases reduce the reactor coolant activity level sufficiently to permit personnel access for refueling or maintenance operations.

9.3.4.3 Safety Evaluation

9.3.4.3.1 Reactivity Control

Any time that the plant is at power, the quantity of boric acid retained and ready for injection always exceeds that quantity required for the normal cold shutdown assuming that the control assembly of greatest worth is in its fully withdrawn position. This quantity always exceeds the quantity of boric acid required to bring the reactor to hot shutdown and to compensate for subsequent xenon decay. An adequate quantity of boric acid is also available in the refueling water storage tank to achieve cold shutdown.

When the reactor is subcritical; i.e., during cold or hot shutdown, refueling and approach to criticality, the neutron source multiplication is continuously monitored and indicated. Any appreciable increase in the neutron source multiplication, including that caused by the maximum physical boron dilution rate, is slow enough to give ample time to start a corrective action to prevent the core from becoming critical. The rate of boration, with a single boric acid transfer pump operating, is sufficient to take the reactor from full power operation to 1% shutdown in the hot condition, with no rods inserted, in less than 90 minutes. In less than 90 additional minutes, enough boric acid can be injected to compensate for xenon decay, although xenon decay below the equilibrium operating level will not begin until approximately 25 hours after shutdown. Additional boric acid is employed if it is desired to bring the reactor to cold shutdown conditions.

Two (2) separate and independent flow paths are available for reactor coolant boration; i.e., the charging line and the reactor coolant pump seal injection line. Solution temperature requirements are maintained. A single failure does not result in the inability to borate the RCS. Two (2) separate high head safety injection flow paths are also available.

If the normal charging line is not available, charging to the RCS is continued via reactor coolant pump seal injection at the rate of approximately 5 gpm per pump. At the charging rate of 15 gpm (5 gpm per reactor coolant pump), approximately 6 hours are required to add enough boric acid solution from the Boric Acid Tank to counteract xenon decay, although xenon decay below the full power equilibrium operating level will not begin until approximately 25 hours after the reactor is shutdown. RN 00-073

As backup to the normal boric acid supply, the operator can align the refueling water storage tank outlet to the suction of the charging pumps.

Since inoperability of a single component does not impair ability to meet boron injection requirements, plant operating procedures allow components to be temporarily out of service for repairs. However, with an inoperable component, the ability to tolerate additional component failure is limited. Therefore, operating procedures require immediate action to effect repairs of an inoperable component, restrict permissible repair time, and require demonstration of the operability of the redundant component.

9.3.4.3.2 Reactor Coolant Purification

The CVCS is capable of reducing the concentration of ionic isotopes in the purification stream as required in the design basis. This is accomplished by passing the letdown flow through 1 of the mixed bed demineralizers which removes ionic isotopes, except those of cesium, molybdenum and yttrium, with a minimum decontamination factor of 10. Through occasional use of the cation bed demineralizer the concentration of cesium can be maintained below the Cs-137 value listed in Table 11.1-2. 00-01

99-01

The maximum temperature that will be allowed for the mixed bed and cation bed demineralizers is approximately 140°F. If the temperature of the letdown stream approaches this level, the flow will be automatically diverted so as to bypass the demineralizers. If the letdown is not diverted, the only consequence would be a decrease in ion removal capability. Ion removal capability starts to decrease when the temperature of the resin goes above approximately 160°F for anion resin or above approximately 250°F for cation resin. The resins do not lose their exchange capability immediately. Ion exchange still takes place (at a faster rate) when temperature is increased. However, with increasing temperature, the resin loses some of its ion exchange sites along with the ions that are held at the lost sites. The ions lost from the sites may be re-exchanged farther down the bed. The number of sites lost is a function of the temperature reached in the bed and of the time the bed remains at the high temperature. Capability for ion exchange will not be lost until a significant portion of the exchange sites are lost from the resin.

There would be no safety problem associated with over-heating of the demineralizer resins. The only effect on reactor operating conditions would be the possibility of an increase in the reactor coolant activity level. If the activity level in the reactor coolant were to exceed the limit given in the Technical Specifications, reactor operation would be restricted as required by the Technical Specifications.

9.3.4.3.3 Seal Water Injection

Flow to the reactor coolant pumps' seals is assured by the fact that there are 3 charging pumps, any 1 of which is capable of supplying the normal charging line flow plus the nominal seal water flow.

9.3.4.3.4 Leakage Provisions

CVCS components, valves, and piping which see radioactive service are designed to limit leakage to the atmosphere. Leakage to the atmosphere is limited through:

1. Welding of all piping joints and connections except where flanged connections are provided to facilitate maintenance and hydrostatic testing,

2. Extensive use of leakoffs to collect leakage, and

3. Use of diaphragm valves where conditions permit.

The volume control tank in the CVCS provides an inferential measurement of leakage from the CVCS as well as the RCS. Low level in the volume control tank actuates makeup at the prevailing reactor coolant boron concentration. The amount of leakage can be inferred from the amount of makeup added by the reactor makeup control system.

9.3.4.3.5 Ability to Meet the Engineered Safety Features Function

A failure analysis of the portion of the CVCS which is safety-related (used as part of the emergency core cooling system) is included as part of the emergency core cooling system failure analysis resented in Tables 6.3-6 and 6.3-7.

9.3.4.4 Tests and Inspections

As part of plant operation, periodic tests, surveillance inspections and instrument calibrations are made to monitor equipment condition and performance. Most components are in use regularly; therefore, assurance of the availability and performance of the systems and equipment is provided by control room and/or local indication.

9.3.4.5 Instrumentation Application

Process control instrumentation is provided to acquire data concerning key parameters about the CVCS. The location of the instrumentation is shown on Figure 9.3-16. The instrumentation furnishes input signals for monitoring and/or alarming purposes. Indications and/or alarms are provided for the following parameters:

1. Temperature.

2. Pressure.

3. Flow.

4. Water level.

The instrumentation also supplies input signals for control purposes. Some specific control functions are:

1. Letdown flow is diverted to the volume control tank upon high temperature indication upstream of the mixed bed demineralizers.

2. Pressure upstream of the letdown heat exchanger is controlled to prevent flashing of the letdown liquid.

3. Charging flowrate is controlled during charging pump operation.

4. Water level is controlled in the volume control tank.

5. Temperature of the boric acid solution in the batching tank is maintained.

6. Reactor makeup is controlled.

7. Temperature of letdown flow to the Boron Thermal Regeneration System is controlled.

8. Temperature of the chilled water flow to the letdown chiller heat exchanger is controlled.

9. Temperature of letdown flow return from the boron thermal regeneration demineralizers is controlled.

9.3.5 FAILED FUEL DETECTION SYSTEM

The Virgil C. Summer Nuclear Station does not employ a specific failed fuel detection system. However, provision is made for detection of failed fuel by utilization of the process sampling system and the Radiation Monitoring System, discussed in Sections 9.3.2 and 11.4, respectively. In addition, the refueling machine mast is equipped with hardware to support in-mast sipping - a failed fuel detection process that can be used during refueling.

Radiation monitor, RM-L1, provides indication of the gross gamma activity in the reactor coolant. Alarms are provided in the control room to alert the operator to an excessive increase in reactor coolant activity. Laboratory analysis of a reactor coolant sample is used to establish that fission products are present and, if so, the concentration. In this manner information for the determination of fuel failure is obtained.

9.3.6 BORON RECYCLE SYSTEM

This section describes the design and operating features of the Boron Recycle System (BRS) which includes the Reactor Grade Water System (RGWS) demineralizers. RN 07-037

9.3.6.1 Design Basis

9.3.6.1.1 Collection Requirements

The BRS primarily collects and processes water from the recycle holdup tank. Provisions are made to sample and analyze fluids before they are discharged. Based on the laboratory analysis, these wastes are either released under controlled conditions via the penstocks of the Fairfield Pumped Storage Facility or retained for further processing. Permanent records of liquid releases are provided by analyses of known volumes of waste. Alternatively, the liquid may be reused in the plant. For the most part, this effluent is the deaerated, tritiated, borated, and radioactive water from the letdown and drains. RN 07-037

The BRS is designed to collect, via the letdown line in the Chemical and Volume Control System (CVCS), the excess reactor coolant that results from the following plant operations during 1 core cycle:

1. Dilution for core burnup from approximately 1800 ppm boron at the beginning of an 18 month core cycle to approximately 10 ppm near the end of the core cycle. 02-01

2. Hot shutdowns and startups. Four (4) hot shutdowns are assumed to take place during an 18 month core cycle. 02-01

3. Cold shutdowns and startups. Three (3) cold shutdowns are assumed to take place during an 18 month core cycle. 02-01

4. Refueling shutdown and startup.

The BRS also collects water from the following sources:

1. Reactor coolant drain tank (liquid waste processing system) - collects leakoff type drains from equipment inside the containment.

2. Volume control tank and charging pump suction pressure reliefs (CVCS) and residual heat removal pumps pressure reliefs (Emergency Core Cooling System).

3. Boric acid blender (CVCS) - provides storage of boric acid if a boric acid tank must be emptied for maintenance. The boric acid solution is stored in a recycle holdup tank after first being diluted with reactor makeup water by the blender to ensure against precipitation of the boric acid in the unheated recycle holdup tank.

4. Spent fuel pool pumps (Spent Fuel Cooling System) - provides a means of storing the fuel transfer canal water in case maintenance is required on the transfer equipment. RN 07-037

5. Valve leakoffs and equipment drains.

9.3.6.1.2 Capacity Requirement

The BRS is designed to process the total volume of water collected during a core cycle as well as short term surges. The design surge is that produced by a cold shutdown and subsequent startup during the latter part of a core cycle or by a refueling shutdown and startup.

9.3.6.1.3 Purification Requirement

The water collected by the BRS contains dissolved gases, boric acid, and suspended solids. Based on reactor operations with 1% of the rated core thermal power being generated by failed fuel, the BRS is designed to provide sufficient cleanup of the water to allow discharge to the environment within regulatory limits. RN 07-037

The maximum radioactivity concentration buildup in the BRS components is based on operation of the reactor at its engineered safeguards design rating with failed fuel generating 1% of the rated core thermal power. For each component, the shielding design considers the maximum buildup on an isotopic basis including only those isotopes which are present in significant amounts. Filtration and demineralization are the means by which the activity concentrations are controlled. RN 07-037

9.3.6.2 System Description

The BRS is shown in Figure 9.3-18 (piping and instrumentation diagram). When water is directed to the BRS, the flow passes first through the recycle evaporator feed demineralizers and filters and then into the recycle holdup tanks.

The recycle evaporator feed pumps can be used to transfer liquid from one recycle holdup tank to the other if desired. When sufficient water is accumulated to warrant cleanup operation, the recycle evaporator feed pumps take suction from the selected recycle holdup tank. The fluid then flows through the RGWS demineralizers after which it normally is transferred to one of the waste monitor tanks for eventual release from the plant. Alternatively, the water may be sent back to the other monitor tank or to the excess liquid waste system for further processing. RN 07-037

9.3.6.2.1 Component Descriptions

A summary of principal component data is given in Table 9.3-6 and the code requirements are given in Section 3.2.

9.3.6.2.1.1 Recycle Evaporator Feed Pumps

Two (2) centrifugal, canned pumps supply feed to the RGWS demineralizers from the recycle holdup tanks. The pumps can also be used to recirculate water from the recycle holdup tanks through the recycle evaporator feed demineralizers for cleanup if desired. An auxiliary discharge connection is provided to return water to the transfer canal from the recycle holdup tanks, if those tanks were used for storage of transfer canal water during refueling equipment maintenance. Another auxiliary discharge connection is provided to supply water to the suction of the charging pumps (CVCS) for refilling the RCS after loop or system drain. RN 07-037

9.3.6.2.1.2 Recycle Holdup Tanks

Two (2) recycle holdup tanks provide storage of radioactive fluid which is discharged from the RCS during startup, shutdown, load changes and boron dilution. The sizing criteria for the tanks is based on the design surge cold shutdown and startup. The tanks are constructed of austenitic stainless steel.

Each tank has a diaphragm which prevents air from dissolving in the water and prevents the hydrogen and fission gases in the water from mixing with the air. The volume in the tank above the diaphragm is continuously ventilated with building supply air, and the volume of gas below the diaphragm is vented to the gaseous waste processing system.

In addition to the collection of effluent the recycle holdup tanks provide the following functions:

1. Serve as a head tank for the recycle evaporator feed pumps.

2. Provide holdup for draining the RCS to the centerline of the reactor vessel nozzles, including the pressurizer and steam generators.

3. Provide storage for refueling transfer canal water during refueling equipment maintenance.

4. Collect discharge from the relief valve which bypasses the recycle evaporator feed demineralizers.

9.3.6.2.1.3 Recycle Evaporator Feed Demineralizers

Two (2) sluiceable demineralizers remove fission products from the fluid directed to the recycle holdup tanks. The demineralizers also provide a means of cleaning the recycle holdup tank contents via recirculation. RN 07-037

9.3.6.2.1.4 Recycle Evaporator Condensate Demineralizer

A flushable demineralizer is provided as a polishing demineralizer and provides a means of cleanup of the reactor makeup water storage tank contents. RN 07-037

9.3.6.2.1.5 Recycle Evaporator Feed Filter RN 07-037

This filter collects resin fines and particulates from the fluid entering the recycle holdup tanks.

9.3.6.2.1.6 Recycle Evaporator Condensate Filter

This filter collects resin fines and particulate and may be used in conjunction with the recycle evaporator condensate demineralizer. RN 07-037

9.3.6.2.1.7 Recycle Evaporator Concentrates Filter

This filter removes particulates and may be used during certain fluid transfer operations. RN 07-037

9.3.6.2.1.8 Reactor Grade Water System Demineralizers

The Reactor Grade Water System demineralizers are provided to process radioactive waste prior to release to the environment. The demineralizers are located on the 447' elevation of the Auxiliary Building.

The liquid waste stream enters the demineralizers through a booster pump, a mechanical filter, and an Influent Control Leg which monitors waste stream parameters and provides attachments for service air and water. From the Influent Control Leg, the waste may enter one of the three pressure vessels that contain media for cleanup of the liquid waste. The media normally include: RN 07-037

- Cation resin to remove metals and transition metals.
- Mixed bed resin that reduces undesired positive and negative ions.
- Charcoal media for cleanup as a prefilter providing mechanical filtration capability to protect the other demineralizer beds.

A typical lineup for the three Duratek demineralizers in series could be charcoal, cation and mixed bed with cation.

The actual required vessel lineup during normal plant operation is determined prior to processing by sampling the recycle holdup tank to be processed and determining the parameter(s) that are out of specification. Selection of the appropriate vessels is made by a quick-disconnect logic arrangement. After processing, decontaminated effluent passes through an Effluent Control Leg which records waste volume. RN 07-037

9.3.6.2.1.9 Recycle Holdup Tank Vent Ejector RN 07-037

The ejector is designed to pull gases from under the diaphragm in a recycle holdup tank and deliver them to the gaseous waste processing system. Nitrogen, provided by the standby waste gas compressor, provides the motive force. 02-01

9.3.6.2.1.10 Valves RN 07-037

The basic material of construction for most valves is stainless steel. All valves are welded to the piping except the three-way and relief valves, which are flanged. All three-way valves are provided with a stuffing box and lantern leakoff connections. The relief valve upstream of the recycle evaporator feed demineralizers protects the piping which feeds these demineralizers.

9.3.6.2.1.11 Piping

Piping that handles radioactive liquid is austenitic stainless steel. All piping joints and connections are welded, except where flanged connections are required to facilitate equipment removal for maintenance and hydrostatic testing. Stainless steel flex hose is used in a portion of the system. RN 07-037

9.3.6.2.2 System Operation

The BRS is manually operated with the exception of a few automatic protection functions. These automatic functions protect the recycle evaporator feed demineralizers from a high inlet temperature and a high differential pressure, prevent a high vacuum from being drawn on the recycle holdup tank diaphragm and protect the recycle evaporator feed pumps from low net positive suction head. The BRS has sufficient instrumentation readouts and alarms to provide the operator information to assure proper system operation. RN 07-037

9.3.6.2.2.1 Demineralization

Water is accumulated in the recycle holdup tank until sufficient quantity exists to warrant processing through the Reactor Grade Demineralizer System demineralizers. Prior to cleanup operation the contents of the recycle holdup tank are analyzed and if required the demineralizer sequence or resin mix adjusted. Following processing by the demineralizers the flow is sent to the waste monitor tank for discharge to the environment. When the water has been sufficiently processed, it is discharged via the waste monitor tank into the penstocks of the Fairfield Pumped Storage Facility at a rate so as not to exceed a small fraction of the 10 CFR 20 limits. Water leaving this system RN 07-037

is monitored for radiation. This radiation monitor, RM-L5, is described in Section 11.4. Should the radiation monitor close the discharge valve, it must be reset/bypassed before the valve can be reopened. RN 07-037

9.3.6.2.2.2 Recycle Holdup Tank Venting

Because hydrogen is dissolved in the reactor coolant at approximately 1 atmosphere overpressure, a portion of the hydrogen along with fission gases will come out of solution in the recycle holdup tank under the diaphragm. The hydrogen and fission gases are vented to the gaseous waste processing system as required. The total integrated flow from the letdown line and the reactor coolant drain tank to the recycle holdup tanks is monitored. An alarm indicates when a sufficient amount of water has passed to the recycle holdup tanks to require venting of the accumulated gases. A recycle holdup tank should also be vented before and after a RCS loop drain or a drain from the spent fuel pool (or fuel transfer canal).

When venting of either recycle holdup tank is required, the following steps are observed:

1. All inlets to the recycle holdup tank are closed.

2. The recycle holdup tank is lowered to less than or equal to 15%. 02-01

3. Both waste gas compressors are lined up to the recycle holdup tank vent ejector. 02-01

4. The compressors are started up and the vent from the holdup tank is opened. The vent flow is throttled to approximately 1.2 scfm. At this time, a sample of the vent gases can be taken to check the composition.

5. When the gases have been vented from the recycle holdup tank, the pressure in the vent line decreases, which automatically trips the recycle holdup tank vent isolation valve closed.

6. After the vent isolation valve closes, the manual vent valve is closed, the gas compressor is shut down, and the recycle holdup tank inlets and outlets are lined up for normal use.

9.3.6.2.2.3 Maintenance Drains

When large amounts of water must be drained from the RCS or the spent fuel pool (or fuel transfer canal) to the BRS, a recycle holdup tank is drained of water and vented to the gaseous waste processing system. The water can then be stored in this tank until maintenance is completed and, after checking the chemistry, returned. After returning the water, the recycle holdup tank is again vented to the gaseous waste processing system where it is directed to a shutdown gas decay tank to prevent accumulation of air (i.e., nitrogen) in the high activity gas decay tanks during the venting.

9.3.6.2.2.4 Reactor Makeup Water Cleanup

If the reactor makeup water requires purification, it can be recirculated through the recycle evaporator condensate demineralizer until its chemistry is within specifications. If further processing is necessary, water from the reactor makeup water storage tank can be directed through the recycle evaporator condensate demineralizer and into the recycle holdup tanks for processing via the RGWS demineralizers. RN 07-037

9.3.6.3 Safety Evaluation

Malfunctions in the BRS do not affect the safety of station operations. The BRS is designed to tolerate equipment faults with critical functions being met by the use of 2 pieces of equipment so that the failure of 1 will, at most, reduce the capacity of the BRS but not completely shut it down. Because of the large surge capacity of the BRS, the nonavailability of the RGWS demineralizers can be tolerated for periods of time. RN 07-037

9.3.6.4 Tests and Inspections

The BRS is in intermittent use throughout normal reactor operation. Periodic visual inspection and preventive maintenance are conducted using normal industry practice.

9.3.6.5 Instrumentation Application

The instrumentation available for the BRS is discussed below. Alarms are provided as noted. There is also a common alarm on the main control board which indicates any alarms on the BRS panel.

9.3.6.5.1 Temperature at Inlet to the Recycle Evaporator Feed Demineralizer

Instrumentation is provided to measure the temperature of the inlet flow to the recycle evaporator feed demineralizers and to control a three-way bypass valve. If the inlet temperature becomes too high, the instrumentation aligns the valve to bypass the demineralizers. Local temperature indication and a high temperature alarm on the BRS panel are provided by this instrumentation.

9.3.6.5.2 Pressure

1. Pressure Differential Across the Recycle Evaporator Feed Demineralizers

   Instrumentation is provided to measure the pressure differential across the recycle evaporator feed demineralizers and to control the same three-way valve as discussed above (but independently of the temperature control). If the pressure drop through the demineralizers is too high, this instrumentation aligns the valve to divert flow directly to the recycle evaporator feed filters. Local pressure differential indication and a high alarm on the BRS panel are provided by this instrumentation.

2. Pressure at Inlet and Outlet of Filters

Instrumentation is provided to measure the pressure differential across each recycle evaporator feed filter, the recycle evaporator concentrates filter, and the recycle evaporator condensate filter. Local indication of the pressure in each inlet and outlet line is provided.

3. Pressure at Discharge of Recycle Evaporator Feed Pump

   Instrumentation is provided to measure and give local indication of the discharge pressure of each recycle evaporator feed pump.

4. Pressure in Vent Line from the Recycle Holdup Tanks

   Instrumentation is provided to measure the pressure in the recycle holdup tank vent line and to control a shutoff valve in the vent line. This instrumentation is used during holdup tank venting operations. When the pressure in this line becomes too low, the valve will be automatically closed to protect the holdup tank diaphragm from an excessive differential pressure across it. Local pressure indication and low pressure alarm on the BRS panel are provided.

9.3.6.5.3 Flow

1. Boron Recycle System Flow Totalizer

   Instrumentation is provided to monitor the total integrated flow received by the BRS from the letdown line (CVCS) and the reactor coolant drain tank (waste processing system). Indication of integrated flow and high alarm are given on the BRS panel. Actuation of the high alarm indicates that the integrated flow has reached a value at which the volume of gases (hydrogen and fission gases) which have come out of solution should be vented from the recycle holdup tanks.

2. Flow in Vent Line from Recycle Holdup Tanks

   Instrumentation is provided which gives local indication of the recycle holdup tank vent purge flow.

3. Flow in Feed Line to the RGWS Demineralizers

   Instrumentation is provided which gives local indication of RGWS demineralizers feed flow.

RN 07-037

9.3.6.5.4 Level in the Recycle Holdup Tanks

Instrumentation is provided to give an indication of the water level of each recycle holdup tank. Both high level and low level alarms are provided by this instrumentation at the BRS panel. If, after reaching the low level alarm setpoint, the recycle evaporator

feed pumps are not stopped, the holdup tank level will continue to decrease until a second low level point is reached and a level actuated control circuit stops the pumps.

9.3.7 REFERENCES

RN 07-037

1. American National Standards Institute, "Steel Pipe, Flanges, Flanged Valves and Fittings," ANSI B16.5, 1968.

2. American National Standards Institute, "Power Piping," ANSI B31.1, 1967, Addenda through 1972.

3. American National Standards Institute, "American National Standard Guide to Sampling Airborne Radioactive Materials in Nuclear Facilities," ANSI N13.1, 1969.

TABLE 9.3-1

MAJOR COMPRESSED AIR SYSTEM COMPONENTS

Instrument and Service Air Compressors		
Quantity	2	
Type	Oil-free rotary screw, two stage, water cooled	
Location	Turbine Building	
Safety Class	NNS	
Capacity, scfm	990	RN 10-014
Discharge Pressure, psig	125	
Main Motor		
Horsepower	250	
Speed, rpm	1800	
Electrical Characteristics	460V, 3Φ 60 Hz	
Reactor Building Instrument Air Compressors		
Quantity	2	
Type	Reciprocating, single stage, single cylinder, water cooled, nonlubricated	
Location	Penetration Access Area	
Safety Class	NNS	
Capacity, scfm	154	
Discharge Pressure, psig	90 - 125	
Motor		
Horsepower	50	00-01
Speed, rpm	1800	
Electrical Characteristics	460V, 3Φ, 60 Hz	98-01
Instrument Air Dryer		
Quantity	2	
Type	Dual chamber, heated, activated alumina desiccant	RN 10-014
Location	Turbine Building	
Safety Class	NNS	
Guaranteed Capacity, scfm	750	
Dew Point, °F at 100 psig	-40	
Pressure Drop, psi	5	00-01

TABLE 9.3-1 (Continued)

MAJOR COMPRESSED AIR SYSTEM COMPONENTS

Reactor Building Instrument Air Dryers		
Quantity	2	
Type	Refrigerated	
Location	Penetration Access Area	
Safety Class	NNS	
Capacity, scfm	150	
Dew Point, °F at 100 psig	35	
Pressure Drop, psi	<5	
Backup Instrument Air Compressor		
Quantity	1	
Type	Single Stage, Rotary screw	
Location	Auxiliary Building	
Safety Class	NNS	
Capacity, Scfm	636	00-01
Discharge Pressure, psig	120	
Motor		
Horsepower	150	
Speed, rpm	1800	
Electrical Characteristics	460V, 3Φ, 60 Hz	
Diesel Driven Air Compressor		
Quantity	1	
Type	Oil-free, rotary screw, two-stage	
Location	Yard	
Safety Class	NNS	RN 12-018
Capacity, Scfm	1500	
Discharge Pressure, psig	150	
Engine		
Horsepower	600	
Speed, rpm	1800	

TABLE 9.3-2

NUCLEAR SAMPLING SYSTEM SAMPLE POINTS

Points of Extraction	Number of Points
Residual Heat Removal Loops	2
Pressurizer Steam Space	1
Pressurizer Liquid Space	1
Reactor Coolant Loop B (hot leg)	1
Reactor Coolant Loop C (hot leg)	1
Steam Generator A, Secondary Water	2 (shell and blowdown)
Steam Generator B, Secondary Water	2 (shell and blowdown)
Steam Generator C, Secondary Water	2 (shell and blowdown)
Accumulators A, B, C	3 (one each accumulator)
Chemical and Volume Control System	
Downstream of Letdown Heat Exchanger	1
Downstream of Mixed Bed Demineralizer No. 1	1
Downstream of Mixed Bed Demineralizer No. 2	1
Downstream of Demineralizers and Upstream of Reactor Coolant Filter	1
Volume Control Tank, Gas Space	1
Reactor Coolant Drain Tank	1
Thermal Regeneration Demineralizer Outlet	1

TABLE 9.3-3

NUCLEAR SAMPLING SYSTEM MAJOR COMPONENTS

Sample Heat Exchangers	Service (1)			
	(a)	(b)	(c)	(d)
Quantity	1	2	1	3
Cooling Water (shell)				
Inlet Temperature, max., °F	105	105	105	105
Inlet Temperature, normal range, °F	54-98	54-98	54-98	54-98
Flow, gpm	14	14	14	14
Pressure, max., psig	150	150	150	150
Pressure Drop, psi	< 10	< 10	< 10	< 10
Cooled Water (tube)				
Inlet Temperature, °F	680	650	400	540
Outlet Temperature, °F	< 100	< 100	< 100	< 100
Outlet Temperature, max., °F	120	120	120	120
Flow, gpm	0.3	0.68	0.47	0.64
Design Pressure, psig	2485	2485	600	1185
Pressure Drop, psi	< 50	< 50	< 50	< 50
Velocity, min., ft/sec	2.0	4.7	3.2	4.4
Delay Coils				
Design Pressure, psig	2485			
Size, inches	1/2 OD; 0.188 wall			
Length, ft				
Reactor Coolant Loop Sample	142			
Sample Downstream Letdown Heat Exchanger (two coils)	240, 120			
Orientation	Vertical runs connected by 180° bends			
Material	Type 304 stainless steel			
Code	ASME Code, Section III Class 2			

02-01

(1) Service

Pressurizer Steam and Liquid Space	(a)
Reactor Coolant Loops B and C	(b)
Residual Heat Removal Loop	(c)
Steam Generators A, B, and C	(d)

TABLE 9.3-4

CHEMICAL AND VOLUME CONTROL SYSTEM DESIGN PARAMETERS

General

Seal Water supply flowrate, for three reactor coolant pumps nominal, gpm	24	
Seal Water return flowrate, for three reactor coolant pumps, nominal, gpm	7.5	RN 14-043
Letdown Flow, gpm	60 - 120	
Charging flow (excludes seal water), gpm	45 - 105	
Temperature of letdown reactor coolant entering system maximum, °F	557	RN 99-027
Temperature of charging flow directed to reactor coolant system min. @ 105 gpm charging, °F	438	
Temperature of effluent directed to boron recycle system, °F	115	
Centrifugal charging pump bypass Flow (each), gpm	60	
Alternate Seal Injection Pump Flow, gpm	20	RN 11-027

TABLE 9.3-5

PRINCIPAL COMPONENT DATA SUMMARY
CHEMICAL AND VOLUME CONTROL SYSTEM

Centrifugal Charging Pumps		
Number	3	
Design pressure, psig	2900	
Design temperature,°F	300	
Design flow, gpm	150	
Design head, ft	5800	
Material	Austenitic Stainless Steel	
Boric Acid Transfer Pumps		
Number	2	
Design Pressure, psig	150	
Design temperature, °F	200	
Design Flow, gpm	75	
Design Head, ft	235	
Material	Austenitic Stainless Steel	
BTRS Chiller Pumps		
Number	2	
Design Pressure, psig	150	
Design temperature, °F	200	
Design Flow, gpm	400	
Design head, ft	150	
Material	Carbon Steel	
Regenerative Heat Exchanger		
Number	1	
Heat transfer rate at 60 gpm letdown, BTU/hr	8.62×10^6	RN 99-027
Shell Side		
Design Pressure, psig	2485	
Design temperature, °F	650	
Fluid	Borated Reactor Coolant	
Material	Austenitic Stainless Steel	
Alternate Seal Injection Pump		
Number	1	
Design Pressure, psig	3107	RN 11-027
Design temperature, °F	120	
Design Flow, gpm	20	
Design head, ft	7120	
Material	Austenitic Stainless Steel	

TABLE 9.3-5 (Continued)

PRINCIPAL COMPONENT DATA SUMMARY
CHEMICAL AND VOLUME CONTROL SYSTEM

Regenerative Heat Exchanger (Continued)		
Tube Side		
Design pressure, psig	3100	
Design temperature,°F	650	
Fluid	Borated Reactor Coolant	
Material	Austenitic Stainless Steel	
Shell Side (@ 60 gpm Letdown)		RN 99-027
Flow, lb/hr (Normal)	29,800	
Inlet temperature, °F	554	
Outlet temperature, °F	290	
Tube Side (@ 45 gpm Charging)		RN 99-027
Flow, lb/hr	22,400	
Inlet temperature, °F	130	
Outlet temperature, °F	501	
Letdown Heat Exchanger		
Number	1	
Heat transfer rate at 120 gpm letdown, BTU/hr	16.1×10^6	RN 99-027
Shell Side		
Design pressure, psig	150	
Design temperature, °F	250	
Fluid	Component Cooling Water	
Material	Carbon Steel	
Tube Side		
Design pressure, psig	600	
Design temperature, °F	400	02-01
Fluid	Borated reactor Coolant	
Material	Austenitic Stainless Steel	

TABLE 9.3-5 (Continued)

PRINCIPAL COMPONENT DATA SUMMARY
CHEMICAL AND VOLUME CONTROL SYSTEM

Letdown Heat Exchanger (Continued)

Shell Side	@ 120 gpm Letdown	@ 60 gpm Letdown	RN 99-027
Flow, lb/hr	551,000	76,500	
Inlet temperature, °F	105	105	
Outlet temperature, °F	134	173	
Tube Side (Letdown)			
Flow, lb/hr	59,600	29,800	
Inlet temperature, °F	380	290	
Outlet temperature, °F	115	115	

Excess Letdown Heat Exchanger

Number		1
Heat transfer rate at design conditions, BTU/hr		5.2×10^6
	Shell Side	Tube Side
Design pressure, psig	150	2485
Design temperature, °F	250	650
Design flow, lb/hr	129,000	12,410
Inlet temperature, °F	105	557
Outlet temperature, °F	145	165
Fluid	Component Cooling Water	Borated Reactor Coolant
Material	Carbon Steel	Austenitic Stainless Steel

Seal Water Heat Exchanger (Design Case) 00-01

Number		1	
Heat transfer rate at design conditions, BTU/hr		1.51×10^6	00-01
Design pressure, psig	150	150	
Design temperature, °F	250	250	
Design flow, lb/hr	115,000	64,075	
Inlet temperature, °F	105	138	
Outlet temperature, °F	118	115	
Fluid	Component Cooling Water	Borated Reactor Coolant	
Material	Carbon Steel	Austenitic Stainless Steel	

TABLE 9.3-5 (Continued)

PRINCIPAL COMPONENT DATA SUMMARY
CHEMICAL AND VOLUME CONTROL SYSTEM

Seal Water Heat Exchanger (Alt. Case)	Shell Side	Tube Side	
Heat transfer rate, BTU/hr		1.58×10^6	00-01
Design flow, lb/hr	115,000	46,660	
Inlet temperature, °F	105.0	148.8	
Outlet temperature, °F	118.7	115.0	
Moderating Heat Exchanger			
Number		1	
Heat transfer rate at design conditions, BTU/hr		2.53×10^6	
Design pressure, psig	300	300	
Design temperature, °F	200	200	
Design flow, lb/hr	59,600	59,600	
Design inlet temperature (boron storage mode), °F	50	115	
Design outlet temperature (boron storage mode), °F	92.4	72.6	
Inlet temperature (boron release mode), °F	140	115	
Outlet temperature (boron release mode), °F	123.7	131.3	02-01
Material	Austenitic Stainless Steel	Austenitic Stainless Steel	
Letdown Chiller Heat Exchanger			
Number		1	
Heat transfer rate at design conditions (boron storage mode), BTU/hr		1.65×10^6	
Design pressure, psig	150	300	
Design temperature, °F	200	200	
Design flow (boron storage mode), lb/hr	175,000	59,600	
Design inlet temperature (boron storage mode), °F	39	72.6	
Design outlet temperature (boron storage mode), °F	48.4	45	

TABLE 9.3-5 (Continued)

PRINCIPAL COMPONENT DATA SUMMARY
CHEMICAL AND VOLUME CONTROL SYSTEM

	Shell Side	Tube Side
Letdown Chiller Heat Exchanger (Continued)		
Flow (boron release mode), lb/hr	175,000	59,600
Inlet temperature (boron release mode), °F	90	123.7
Outlet temperature (boron release mode), °F	99.4	96.1
Material	Carbon Steel	Austenitic Stainless Steel
Letdown Reheat Heat Exchanger		
Number		1
Heat transfer rate at design conditions, BTU/hr		1.49×10^6
Design pressure, psig	300	600
Design temperature, °F	200	400
Design flow, lb/hr	59,600	44,700
Inlet temperature, °F	115	280
Outlet temperature, °F	140	246.7
Material	Austenitic Stainless Steel	Austenitic Stainless Steel
NOTE: The tube side of the Letdown Reheat Heat Exchanger is no longer in use.		
Volume Control Tank		
Number		1
Volume, ft^3		300
Design Pressure, psig		75
Design temperature, °F		250
Material		Austenitic Stainless Steel
Boric Acid Tanks		
Number		2
Usable capacity, gal		21,000
Design pressure, psig		Atmospheric
Design temperature, °F		170
Material		Austenitic Stainless Steel

RN 99-075

TABLE 9.3-5 (Continued)

PRINCIPAL COMPONENT DATA SUMMARY
CHEMICAL AND VOLUME CONTROL SYSTEM

Batching Tank	
Number	1
Capacity, gal	400
Design pressure	Atmospheric
Design temperature, °F	300
Material	Austenitic Stainless Steel
Chemical Mixing Tank	
Number	1
Capacity, gal	5
Design pressure, psig	150
Design temperature, °F	200
Material	Austenitic Stainless Steel
BTRS Chiller Surge Tank	
Number	1
Volume, gal	500
Design pressure	Atmospheric
Design temperature, °F	200
Material	Carbon Steel
Mixed Bed Demineralizers	
Number	2
Design pressure, psig	300
Design temperature, °F	250
Design flow, gpm	120
Resin volume, each, ft^3	30
Material	Austenitic Stainless Steel
Cation Bed Demineralizer	
Number	1
Design pressure, psig	300
Design temperature, °F	250
Design flow, gpm	60
Resin volume, ft^3	20
Material	Austenitic Stainless Steel

02-01

TABLE 9.3-5 (Continued)

PRINCIPAL COMPONENT DATA SUMMARY
CHEMICAL AND VOLUME CONTROL SYSTEM

Thermal Regeneration Demineralizers		
Number	4	
Design pressure, psig	300	
Design temperature, °F	250	
Design flow, gpm	120	
Resin volume, ft^3 *	74	99-01
Material	Austenitic Stainless Steel	
Reactor Coolant Filter		
Number	1	
Design pressure, psig	300	
Design temperature, °F	250	
Design flow, gpm	150	
Particle size, 98% retention	≤ 25 micron	
Material, (vessel)	Austenitic Stainless Steel	
Seal Water Injection Filters		
Number	2	
Design pressure, psig	2735	
Design temperature, °F	200	
Design flow, gpm	80	
Particle size, 98% retention	≤ 5 micron	RN 98-128
Material, (vessel)	Austenitic Stainless Steel	
Seal Water Return Filter		
Number	1	
Design pressure, psig	150	
Design temperature, °F	250	
Design flow, gpm	150	
Particle size, 98% retention	≤ 25 micron	
Material, (vessel)	Austenitic Stainless Steel	

* More resin must be added to allow for compaction. 99-01

TABLE 9.3-5 (Continued)

PRINCIPAL COMPONENT DATA SUMMARY
CHEMICAL AND VOLUME CONTROL SYSTEM

Boric Acid Filter		
Number	1	
Design pressure, psig	150	
Design temperature, °F	250	
Design flow, gpm	150	
Particle size, 98% retention	≤ 25 micron	
Material, (vessel)	Austenitic Stainless Steel	
Letdown Orifice	45 gpm	60 gpm
Number	1	2
Design flow, lb/hr	22,400	29,800
Differential pressure at design flow, psia	1,700	1,700
Design pressure, psig	2,485	2,485
Design temperature, °F	650	650
Material	Austenitic Stainless Steel	Austenitic Stainless Steel
Boric Acid Blender		
Number	1	
Design pressure, psig	150	
Design temperature, °F	200	
Material	Austenitic Stainless Steel	
BTRS Chiller		
Number	1	
Capacity, BTU/hr	1.66×10^6	
Design flow, gpm	352	
Inlet temperature, °F	48.3	
Outlet temperature, °F	39	

RN 14-043

TABLE 9.3-6

PRINCIPAL COMPONENT DATA SUMMARY
BORON RECYCLE SYSTEM

Recycle Evaporator Feed Pumps	
Number	2
Design pressure, psig	150
Design temperature, °F	200
Design flow, gpm	30/100
Design head, ft	320/250
Material	Stainless Steel
Recycle Holdup Tanks	
Number	2
Capacity, gal	42,000
Design pressure	Atmospheric
Design temperature, °F	200
Material	Stainless Steel
Recycle Evaporator Reagent Tank -NO LONGER IN SERVICE-	
Number	1
Capacity, gal	5
Design pressure, psig	150
Design temperature, °F	200
Material	Stainless Steel
Reactor Grade Water System Demineralizers	
Number	3
Type	Sluiceable
Design pressure, psig	150
Design temperature, °F	200
Design flow, gpm	35
Resin volume, ft^3	28
Material	Stainless Steel
Recycle Evaporator Feed Demineralizers	
Number	2
Design pressure, psig	150
Design temperature, °F	200
Design flow, gpm	120
Resin volume, ft^3	30
Material	Stainless Steel
Recycle Evaporator Condensate Demineralizer	
Number	1
Design pressure, psig	150
Design temperature, °F	200
Design flow, gpm	35
Resin volume, ft^3	20
Material	Stainless Steel

RN 07-037

02-01

TABLE 9.3-6 (Continued)

PRINCIPAL COMPONENT DATA SUMMARY
BORON RECYCLE SYSTEM

Recycle Evaporator Feed Filter		02-01
Number	1	
Design pressure, psig	300	02-01
Design temperature, °F	250	
Design flow, gpm	150	
Filtration rating, 98% removal	5 micron	02-01
Material (vessel)	Stainless Steel	
Recycle Evaporator Condensate Filter		
Number	1	
Design pressure, psig	200	02-01
Design temperature, °F	250	
Design flow, gpm	35	
Filtration rating, 98% removal	25 micron	02-01
Material (vessel)	Stainless Steel	
Recycle Evaporator Concentrates Filter		
Number	1	
Design pressure, psig	200	
Design temperature, °F	250	02-01
Design flow, gpm	35	
Filtration rating, 98% removal	25 micron	02-01
Material, (vessel)	Stainless Steel	
Recycle Evaporator Package **-NO LONGER IN SERVICE-**		
Number	1	
Design flow, gpm	15	
Concentration of concentrate (boric acid), wt percent	4	RN 07-037
Concentration of condensate	< 10 ppm boron as H_3BO_3	
Material	Stainless Steel	
Recycle Holdup Tank Vent Ejector		02-01
Number	1	
Design pressure, psig	150	
Design temperature, °F	200	
Suction flow, lb/hour	0.248 – 0.3	
Motive flow, lb/hour	158	02-01
Material	Stainless Steel	

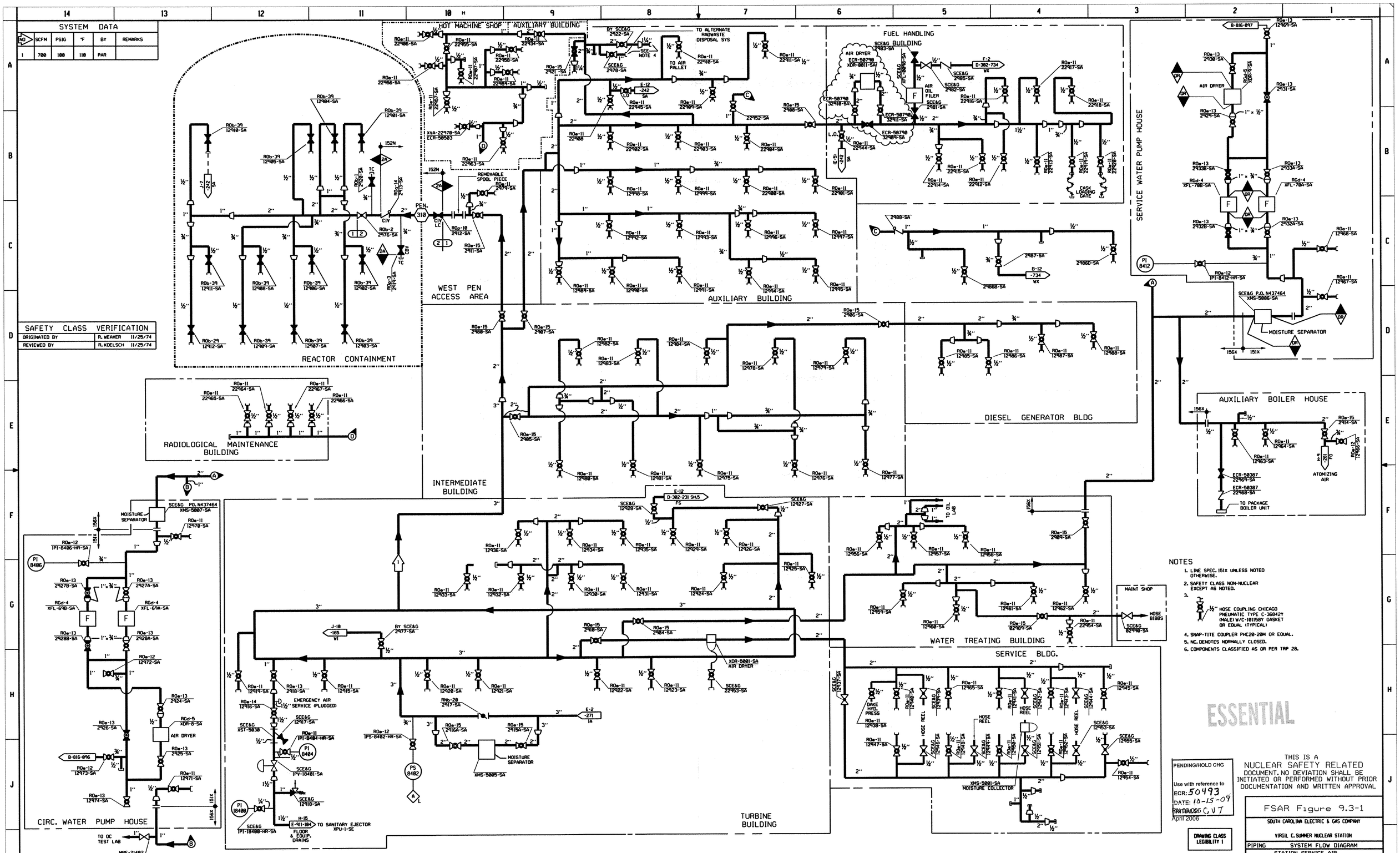

SYSTEM DATA					
NO	SCFM	PSIG	°F	BY	REMARKS
1	700	100	110	PAR	

SAFETY CLASS VERIFICATION		
ORIGINATED BY	R. WEAVER	11/25/74
REVIEWED BY	R. KOELSCH	11/25/74

DESIGN DATA										
P	PSIG (NORMAL)	°F (NORMAL)	PSIG (UPSET)	°F (UPSET)	DURATION (UPSET)	HY DRO	BY	CKD	REMARKS
2	120	110	135	290	< 1%	170	JN		PNEUMATIC
1	120	110	135	290	< 1%	100	JN		PNEUMATIC

NOTES

1. LINE SPEC. 151X UNLESS NOTED OTHERWISE.
2. SAFETY CLASS NON-NUCLEAR EXCEPT AS NOTED.
3. ½" HOSE COUPLING CHICAGO PNEUMATIC TYPE C-36842Y (MALE) W/C-101158Y GASKET OR EQUAL (TYPICAL)
4. SNAP-TITE COUPLER PHC20-20M OR EQUAL.
5. NC. DENOTES NORMALLY CLOSED.
6. COMPONENTS CLASSIFIED AS OR PER TRP 28.

PENDING/HOLD CHG
Use with reference to
ECR: 50493
DATE: 10-15-09
INITIALS: C, VT
April 2006

DRAWING CLASS LEGIBILITY I

THIS IS A NUCLEAR SAFETY RELATED DOCUMENT. NO DEVIATION SHALL BE INITIATED OR PERFORMED WITHOUT PRIOR DOCUMENTATION AND WRITTEN APPROVAL

FSAR Figure 9.3-1

SOUTH CAROLINA ELECTRIC & GAS COMPANY

VIRGIL C. SUMMER NUCLEAR STATION

PIPING — SYSTEM FLOW DIAGRAM

STATION SERVICE AIR

SCE&G A SCANA COMPANY — DESIGN ENGINEERING — V. C. SUMMER NUCLEAR STATION JENKINSVILLE, S. C.

MADE	CHECKED	LE APPROVAL
1. SRM	2. RHM	3. TQL

SCALE: NO SCALE — DRAWING NUMBER: D-302-241 — SHT. NUMBER: — REV: 38

NO.	DATE	BY	REVISION	CKD. BY	LE APPROVAL	
38	8/27/15	GGS	REVISED PER ECR-50790	BEC	CR	
37	12/1/14	GS	REVISED PER ECR-50790B	MP	CR	
36	5/10/11	DDJ	REVISED PER ECR-50680	MGR	GJM	
35	12/15/05	JMR	REVISED PER ECR-70601	MGR	GAR	
34	10/16/03	JTS	CADD ENHANCED PER ECR-50239	MGR	DDJ	
33	10/2/03	RHM	REVISED PER ECR-50503	RHM	DLM	

1/4"=1'-0" 0' 5' 10' 15' 20'

SYSTEM DATA					
NO	SCFM	PSIG	TEMP	BY	REMARKS
1	990	120	110		
2	990	0	95		INLET
3					DELETED
4	600	100	110	PAR	I.A.
5	700	100	110	PAR	S.A.
6	150	100	110	PAR	SEE NOTE 4
7	50	100	110	PAR	
8	250	100	110	PAR	
9	300	100	110	PAR	
10	30	100	110	PAR	SEE NOTE 2

VALVE NO	B-816 DWG	GRID. LOC THIS DWG	VALVE NO	B-816 DWG	GRID. LOC THIS DWG
12636	-078	D-1	12691	-010	B-11
12637	-056	D-1	12692	-009	B-11
12638	-055	D-1	12693		C-11
12639	-053	D-2	12694	-008	C-11
12640	-052	D-2	12695		C-11
12641	-051	D-3	12696	-020	B-7
12642	-049	D-3	12697	-020	B-7
12643	-057	C-3	12698	-100	B-7
12644	-050	C-3	12699	-099	B-8
12645	-041	C-3			
12646	-042	C-3	22600	-105	B-8
12647	-043	C-3			
12648	-044	C-4	22603	-018	A-6
12649	-045	C-4	22604		A-6
12650	-045	C-4	22605		A-6
12651	-040	B-2	22606	-019	A-7
12652	-039	B-2	22607		A-7
12653	-038	B-2	22608	-017	A-7
12654	-037	B-2	22609	-017	A-7
12655	-036	B-2	22610	-016	A-7
12656	-047	B-3	22611	-016	A-7
12657		B-3	22612	-015	A-8
12658	-035	B-3	22613		A-8
12659	-026	D-4	22614	-002	A-8
12660	-028	D-4	22615		A-8
12661	-102	C-4	22616		A-6
12662	-103	C-4	22617	-064	A-6
12663	-098	D-4	22618		A-7
12664		B-3	22619	-065	A-7
12665	-024	B-3	22620	-066	A-7
12666	-025	B-3	22621	-066	A-7
12667	-023	B-3	22622	-022	A-9
12668		B-3	22623	-021	A-9
12669	-059	A-4	22624		A-10
12670	-061	A-4	22625		A-8
12671		A-4	22626	-071	A-9
12672		A-4	22627	-072	A-9
12673	-062	A-4	22628	-070	A-9
12674	-063	A-4	22629		A-9
12675	-058	B-3	22630	-069	A-9
12676		B-3	22631	-068	A-10
12677	-058	B-3	22632	-067	A-10
12678	-058	B-3	22633	-067	A-10
12679	-077	B-4	22634	-075	A-11
12680	-014	B-6	22635	-073	A-9
12681	-012	B-6			
12682	-011	B-7	22637	-034	C-1
12683		B-7	52614	-103	C-4
12684	-013	B-7	72629	-109	G-1
12685	-012	C-6			
12686	-001	C-7			
12687	-001	C-7			
12688	-001	C-7			
12689	-001	C-7			
12690	-010	B-11			

1. LINE SPEC TO BE 151X EXCEPT AS NOTED.
2. STERILE WATER TANK REQUIRES 136 SCFM FOR 15 MIN/8 HOURS & MIXED BED DEMINERALIZERS REQUIRE 330 SCFM FOR 30 MIN/24 HOURS.
3. PIPING AND COMPONENTS ARE NON-NUCLEAR, EXCEPT AS NOTED.
4. REACTOR BLDG BACKUP INSTRUMENT AIR SUPPLY, REQUIRED ONLY WHEN REACTOR BLDG INSTRUMENT AIR SYSTEM FAILS.
5. ITEMS DESIGNATED WITH (F) ARE FURNISHED BY THE COMPRESSOR SUPPLIER.
6. FOR COMPONENTS CLASSIFIED AS OR, SEE TRP-28.
7. THIS HOSE CONNECTION IS USED TO CONNECT A PRESSURE SENSING LINE TO THE TEMPORARY DIESEL AIR COMPRESSOR FOR PRESSURE CONTROL.

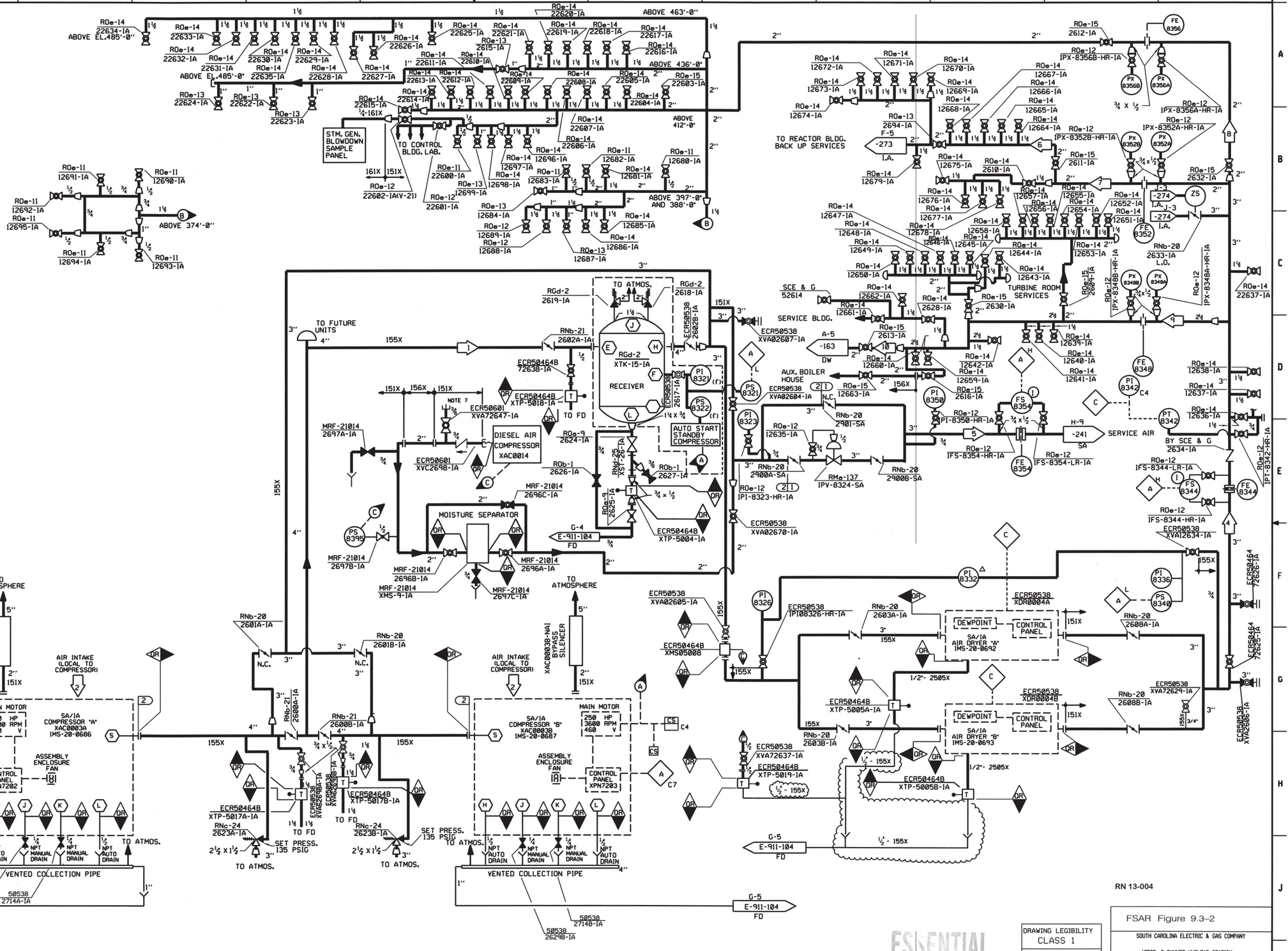

#	PSIG	°F	PSIG	°F	DURA.	HY-DRG	BY	CHKD	REMARKS
	NORMAL		UPSET						
1	120	110	135	290	<1%	100			
2	120	110	135	150	<1%	203	PAR		

DESIGN DATA

1/4"=1'-0"

RN 13-004

ESSENTIAL

DRAWING LEGIBILITY CLASS 1

SCE&G CAD ENHANCED

NO.	DATE	BY	REVISION	CKD. BY	LE APPROVAL
41	10/04/2002	JTS	REVISED PER ECR-50577	MGR	KW
40	7/7/10	RHM	REVISED PER ECR-50538	MGR	LS
39	6/22/10	RHM	REVISED PER ECR-50538	MGR	LS
38	1/20/06	JTS	REVISED PER ECR-70829 (CER#05-1412)	MGR	GAR
37	5/24/05	RHM	REVISED PER ECR-50601	RHM	AME
36	10/25/04	RHM	REVISED PER ECR-50581	MGR	MH
42	3/04/2013	DDJ	REVISED PER ECR-50538	MGR	LS

FSAR Figure 9.3-2

SOUTH CAROLINA ELECTRIC & GAS COMPANY

VIRGIL C. SUMMER NUCLEAR STATION

PIPING — SYSTEM FLOW DIAGRAM

INSTRUMENT AIR

SCE&G A SCANA COMPANY — DESIGN ENGINEERING — V.C. SUMMER NUCLEAR STATION JENKINSVILLE, S.C.

MADE: 1. ACI — CHECKED: 2. RHM — LE APPROVAL: 3. RBS

SCALE: NO SCALE

DRAWING NUMBER: D-302-271 — SHT. NUMBER: 42 — REV

SYSTEM DATA

#	SCFM	PSIG	°F	BY	REMARKS
1	150	110	125	PAR	
2	150	0	AMB	PAR	

SAFETY CLASS VERIFICATION

ORIGINATED BY	P. A. RAINEY	8-21-74
REVIEWED BY	C. C. SEEH	8-21-74

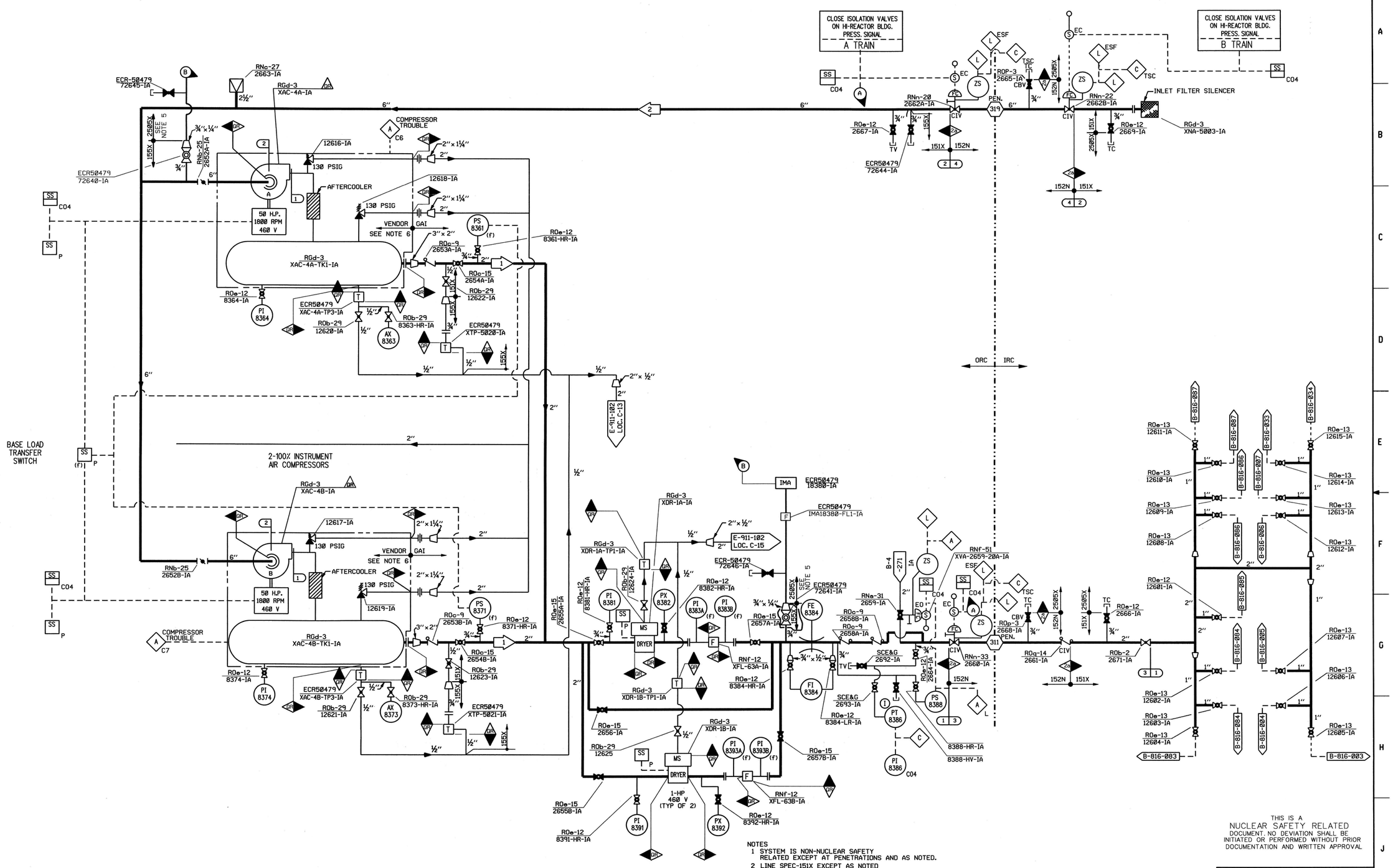

MINIMUM HYDROSTATIC TEST TEMP. 60°F

#	PSIG NORMAL	F NORMAL	PSIG UPSET	F UPSET	DURATION UPSET	HYDRO	BY	CHK'D	REMARKS
5	125	120	220	400	< 1%	—	WTW		PNEUMATIC SEE NOTE 7
4	0	120	66	283	< 1%	85	JN		PNEUMATIC
3	125	120	130	225	< 1%	160	JN		PNEUMATIC
2	0	120	0	120	< 1%	—	JN		———
1	125	120	130	225	< 1%	100	JN		PNEUMATIC

DESIGN DATA

1/4" = 1'-0" 0' 5' 10' 15' 20'

NOTES
1. SYSTEM IS NON-NUCLEAR SAFETY RELATED EXCEPT AT PENETRATIONS AND AS NOTED.
2. LINE SPEC-151X EXCEPT AS NOTED
3. ITEMS DESIGNATED WITH (f) ARE FURNISHED BY EQUIPMENT SUPPLIER
4. FOR COMPONENTS CLASSIFIED AS QR SEE TRP-28
5. TUBING WALL THICKNESS IS 0.035
6. SEE IMS-20-220 SH.2 FOR DETAILS OF AIR COMPRESSOR SKID
7. SEE DRAWING B-817-130 FOR PORTIONS OF SYSTEM SUBJECT TO DESIGN FLAG #5 CONDITIONS

ESSENTIAL

THIS IS A NUCLEAR SAFETY RELATED DOCUMENT. NO DEVIATION SHALL BE INITIATED OR PERFORMED WITHOUT PRIOR DOCUMENTATION AND WRITTEN APPROVAL

DRAWING LEGIBILITY CLASS 1

SCE&G CAD ENHANCED

NO.	DATE	BY	REVISION	CKD. BY	LE APPROVAL
20	5/12/2011	TGB	REVISED PER ECR-50768	DDJ	WTW
19	2/1/10	RHM	REVISED PER ECR-50479	MGR	AME
18	04/24/03	TGB	REVISED PER ECR-71116	MGR	GK
17	11/2/061	RHM	REVISED PER ECR-50479	RHM	AME
16	11/08/05	DDJ	REVISED PER ECR-50479	MGR	AME
15	10/31/05	DDJ	REVISED PER ECR-50479	MGR	AME

FSAR Figure 9.3-3

SOUTH CAROLINA ELECTRIC & GAS COMPANY

VIRGIL C. SUMMER NUCLEAR STATION

PIPING — SYSTEM FLOW DIAGRAM

REACTOR BUILDING INSTRUMENT AIR SERVICES

SCE&G A SCANA COMPANY — DESIGN ENGINEERING — V. C. SUMMER NUCLEAR STATION JENKINSVILLE, S. C.

MADE: VGS — CHECKED: PS — LE APPROVAL: PJS

SCALE: NO SCALE — DRAWING NUMBER: D-302-273 — SHT. NUMBER — REV. 20

SYSTEM DATA					
#	SCFM	PSIG	°F	BY	REMARKS
1	636	120	100	JN	

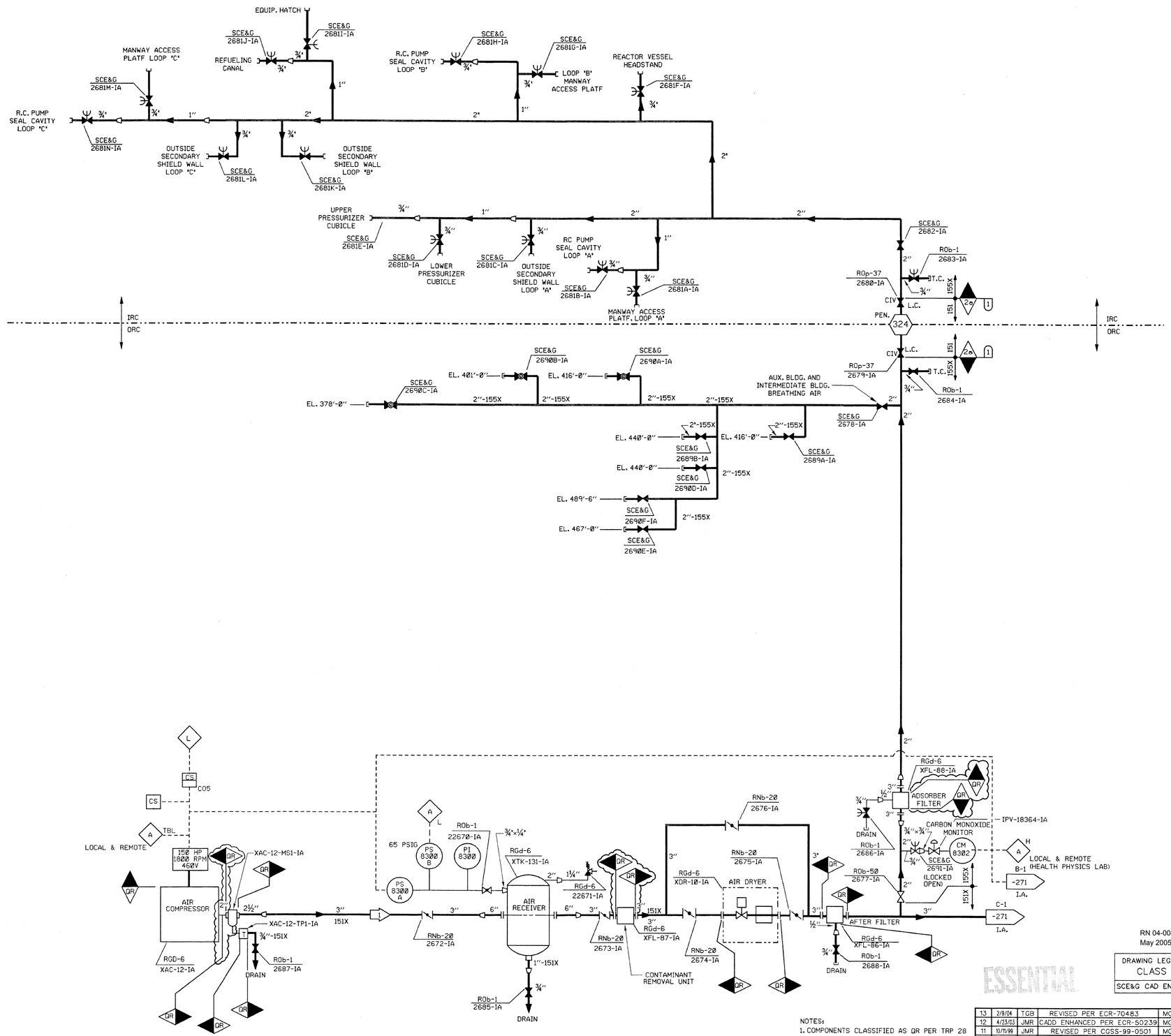

IA	22670	22671
IA	2672	2691
SYSTEM SUFFIX	FIRST NO.	LAST NO.
VALVE NUMBERING		

1	120	110	135	150	<1%	170	JN		PNEUM. TEST
■	PSIG	°F	PSIG	°F	DURA.	HY-DRG	BY	CHKD	REMARKS
	NORMAL		UPSET						
DESIGN DATA									

NOTES:
1. COMPONENTS CLASSIFIED AS QR PER TRP 28

NO.	DATE	BY	REVISION	CKD. BY	LE APPROVAL
13	2/9/04	TGB	REVISED PER ECR-70483	MGR	AME
12	4/23/03	JMR	CADD ENHANCED PER ECR-50239	MGR	DDJ
11	10/11/99	JMR	REVISED PER CGSS-99-0501	MGR	DKW
10	01/08/98	JTS	REVISED PER CGSS-97-0569	LEK	MGR
9	09/27/95	AVN	REVISED PER MRF-22640	MGR	JEW
8	11/15/94	JHM	REVISED BORDER PER CGSS-94-1680	RHM	MGR
7	10-15-93	SRM	REVISED PER MRF-21475	MGR	RLJ

RN 04-004
May 2005

DRAWING LEGIBILITY
CLASS 1
SCE&G CAD ENHANCED

ESSENTIAL

THIS IS A
NUCLEAR SAFETY RELATED
DOCUMENT. NO DEVIATION SHALL BE
INITIATED OR PERFORMED WITHOUT PRIOR
DOCUMENTATION AND WRITTEN APPROVAL

FSAR Figure 9.3-3A

SOUTH CAROLINA ELECTRIC & GAS COMPANY

VIRGIL C. SUMMER NUCLEAR STATION

PIPING — SYSTEM FLOW DIAGRAM
INSTRUMENT AIR BACKUP

SCE&G — A SCANA COMPANY
DESIGN ENGINEERING
V. C. SUMMER NUCLEAR STATION JENKINSVILLE, S. C.

MADE	CHECKED	LE APPROVAL
1. SRM	2. MGR	3. RLJ

SCALE: NO SCALE
DRAWING NUMBER: D-302-274
SHT. NUMBER: 13
REV:

1/4"= 1'-0" 0' 5' 10' 15' 20'

302274_0001.rm Printed by tb17771 Wednesday February 25 2004 11:16:01 AM EST

SYSTEM DATA					
#	GPM	PSIG	°F	BY	REMARKS
1	0.5	600	350	DTK	NORMAL
2		2235	653		
3	0.5	2235	653		NORMAL
4	1.0	2235	618		NORMAL
5	.68	1893	557		NORMAL
6	0.5	660	AMT		
7	1.0	125	115		
8	0.5	110	115		
9	0.5	125	115		
10	0.5	35	115		
11	0.6	15	115		
12	0.5	125	130		
13	.50	600	120		NORMAL
14	.50	2235	120		NORMAL
15	1.0	2235	120		NORMAL
16	.64	900	120		
17	0.5	250	100		
18	1.5	600	80		FLUSH
19	1.2	600	350		POST ACCIDENT
20	1.2	2235	653		POST ACCIDENT
21	1.2	2235	618		POST ACCIDENT
22	1.2	600	136		POST ACCIDENT
23	1.2	2235	265		POST ACCIDENT
24	1.2	2235	144		POST ACCIDENT

(L) NEXT LETTER

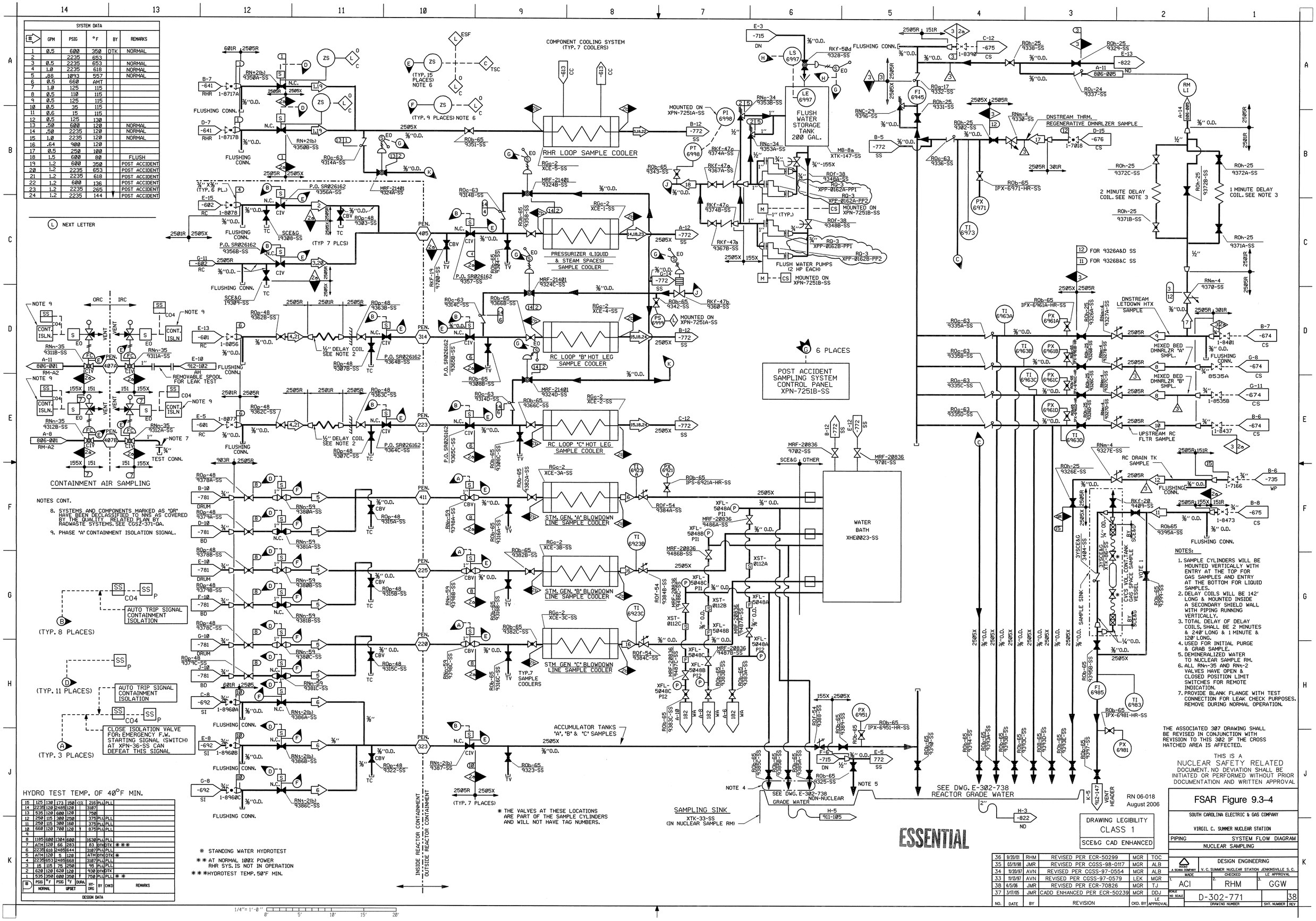

NOTES CONT.

8. SYSTEMS AND COMPONENTS MARKED AS "QR" HAVE BEEN DECLASSIFIED TO NNS AS COVERED BY THE QUALITY RELATED PLAN BY RADWASTE SYSTEMS. SEE CGSZ-371-QA.
9. PHASE "A" CONTAINMENT ISOLATION SIGNAL.

(B) (TYP. 8 PLACES) — AUTO TRIP SIGNAL CONTAINMENT ISOLATION

(D) (TYP. 11 PLACES) — AUTO TRIP SIGNAL CONTAINMENT ISOLATION

(A) (TYP. 3 PLACES) — CLOSE ISOLATION VALVE FOR EMERGENCY F.W. STARTING SIGNAL (SWITCH) AT XPN-36-SS CAN DEFEAT THIS SIGNAL

HYDRO TEST TEMP. OF 40°F MIN.

#	PSIG	°F	PSIG	°F	DURA.	HY-DRO	BY	CHKD	REMARKS
	NORMAL		UPSET						
15	125	130	173	150	∞	216	PLL	PLL	
14	2235	120	2485	120		3187			
13	535	120	600	120		750			
12	250	115	300	250		375	PLL	PLL	
11	250	115	300	160		375	PLL	PLL	
10	660	120	700	120	1	875	PLL	PLL	
9									
8	1185	600	1384	600		1630	PLL	PLL	
7	ATM	120	66	283		83	DTK	DTK	* * *
6	2235	618	2485	644		3187	PLL	PLL	
5	ATM	120	5	120		ATM	DTK	DTK	*
4	2235	653	2485	668		3187	PLL	PLL	
3	15	115	75	250		95	PLL	PLL	
2	620	120	620	120		930	DTK	DTK	
1	535	350	600	350	1	750	PLL	PLL	* *

DESIGN DATA

* STANDING WATER HYDROTEST

** AT NORMAL 100% POWER RHR SYS. IS NOT IN OPERATION

*** HYDROTEST TEMP. 50°F MIN.

* THE VALVES AT THESE LOCATIONS ARE PART OF THE SAMPLE CYLINDERS AND WILL NOT HAVE TAG NUMBERS.

NOTES:

1. SAMPLE CYLINDERS WILL BE MOUNTED VERTICALLY WITH ENTRY AT THE TOP FOR GAS SAMPLES AND ENTRY AT THE BOTTOM FOR LIQUID SAMPLES.
2. DELAY COILS WILL BE 142' LONG & MOUNTED INSIDE A SECONDARY SHIELD WALL WITH PIPING RUNNING VERTICALLY.
3. TOTAL DELAY OF DELAY COILS, SHALL BE 2 MINUTES & 240' LONG & 1 MINUTE & 120' LONG.
4. USED FOR INITIAL PURGE & GRAB SAMPLE.
5. DEMINERALIZED WATER TO NUCLEAR SAMPLE RM.
6. ALL RNn-35 AND RNt-2 VALVES HAVE OPEN & CLOSED POSITION LIMIT SWITCHES FOR REMOTE INDICATION.
7. PROVIDE BLANK FLANGE WITH TEST CONNECTION FOR LEAK CHECK PURPOSES. REMOVE DURING NORMAL OPERATION.

THE ASSOCIATED 307 DRAWING SHALL BE REVISED IN CONJUNCTION WITH REVISION TO THIS 302 IF THE CROSS HATCHED AREA IS AFFECTED.

THIS IS A NUCLEAR SAFETY RELATED DOCUMENT. NO DEVIATION SHALL BE INITIATED OR PERFORMED WITHOUT PRIOR DOCUMENTATION AND WRITTEN APPROVAL

RN 06-018
August 2006

DRAWING LEGIBILITY CLASS 1
SCE&G CAD ENHANCED

NO.	DATE	BY	REVISION	CKD. BY	LE APPROVAL
36	9/20/01	RHM	REVISED PER ECR-50299	MGR	TOC
35	03/11/98	JMR	REVISED PER CGSS-98-0117	MGR	ALB
34	11/20/97	AVN	REVISED PER CGSS-97-0554	MGR	ALB
33	11/13/97	AVN	REVISED PER CGSS-97-0579	LEK	MGR
38	4/5/06	JMR	REVISED PER ECR-70826	MGR	TJ
37	3/17/05	JMR	CADD ENHANCED PER ECR-50239	MGR	DDJ

FSAR Figure 9.3–4

SOUTH CAROLINA ELECTRIC & GAS COMPANY

VIRGIL C. SUMMER NUCLEAR STATION

PIPING — SYSTEM FLOW DIAGRAM

NUCLEAR SAMPLING

SCE&G A SCANA COMPANY — DESIGN ENGINEERING — V. C. SUMMER NUCLEAR STATION JENKINSVILLE S. C.

MADE: ACI — CHECKED: RHM — LE APPROVAL: GGW

SCALE: NO SCALE — D-302-771 — SHT. NUMBER 38 — REV

1/4" = 1'-0"

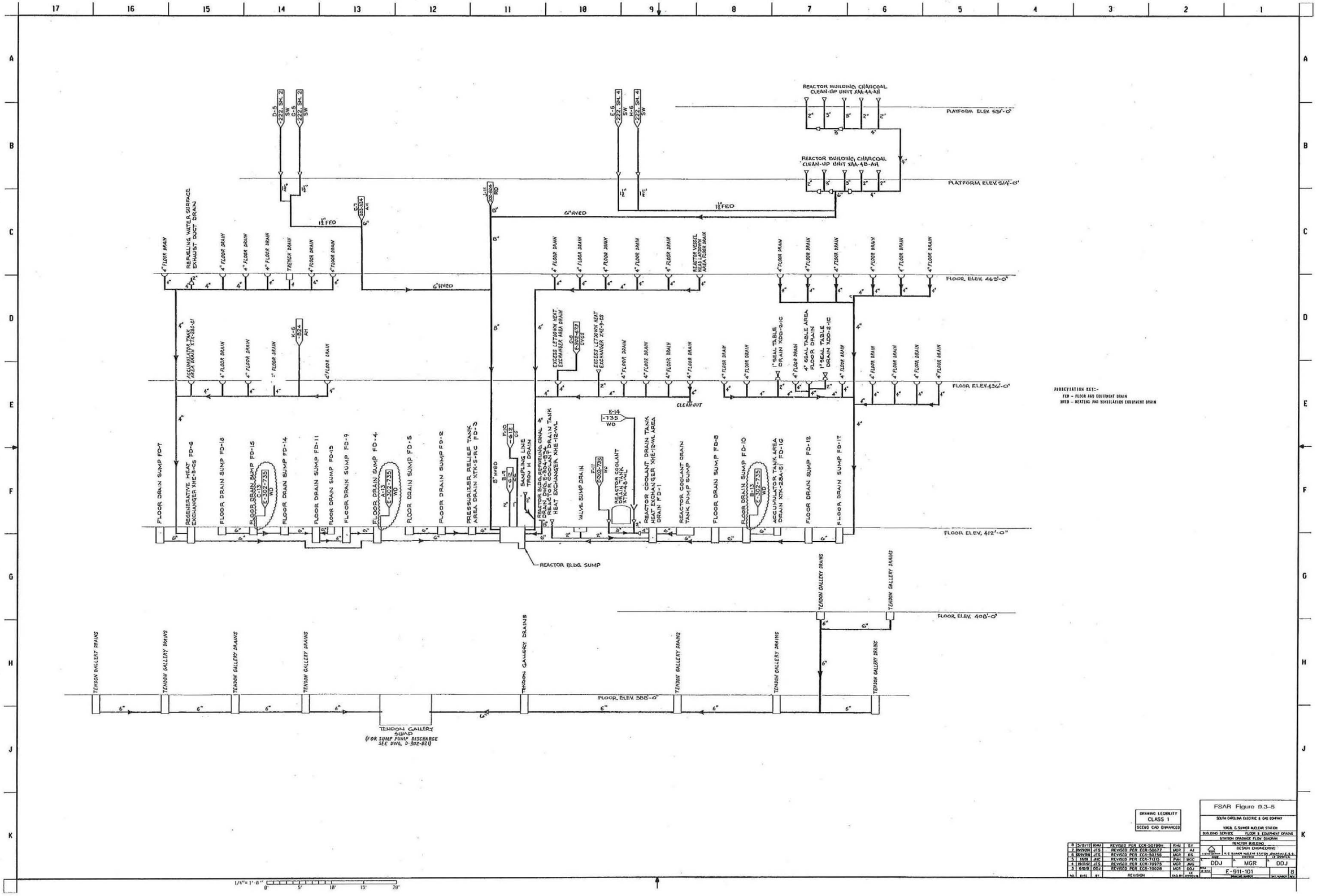
REACTOR BUILDING CHARCOAL CLEAN-UP UNIT XAA-4A-AH
REACTOR BUILDING CHARCOAL CLEAN-UP UNIT XAA-4B-AH
PLATFORM ELEV. 531'-0"
PLATFORM ELEV. 514'-0"
FLOOR ELEV. 463'-0"
FLOOR ELEV. 436'-0"
FLOOR ELEV. 412'-0"
FLOOR ELEV. 408'-0"
FLOOR ELEV. 388'-0"
REFUELING WATER SURFACE EXHAUST DUCT DRAIN
4" FLOOR DRAIN
TRENCH DRAIN
REACTOR VESSEL HEAD LAYDOWN AREA FLOOR DRAIN
ACCUMULATOR TANK AREA DRAIN XTK-2B6-S1
EXCESS LETDOWN HEAT EXCHANGER AREA DRAIN
EXCESS LETDOWN HEAT EXCHANGER XHE-5-1S
1" SEAL TABLE DRAIN XDD-2-1C
4" SEAL TABLE AREA FLOOR DRAIN
1" SEAL TABLE DRAIN XDD-2-1B
CLEAN-OUT
FLOOR DRAIN SUMP FD-7
REGENERATIVE HEAT EXCHANGER XHE-3-C5 FD-6
FLOOR DRAIN SUMP FD-18
FLOOR DRAIN SUMP FD-15
FLOOR DRAIN SUMP FD-14
FLOOR DRAIN SUMP FD-11
FLOOR DRAIN SUMP FD-13
FLOOR DRAIN SUMP FD-9
FLOOR DRAIN SUMP FD-4
FLOOR DRAIN SUMP FD-5
FLOOR DRAIN SUMP FD-2
PRESSURIZER RELIEF TANK AREA DRAIN XTK-5-RC FD-3
REACTOR BLDG. SEPARATING CANAL DRAIN, DWG. E-304-B34
REACTOR COOLANT DRAIN TANK HEAT EXCHANGER XHE-12-WL
SAMPLING LINE TROU H DRAIN
VALVE SUMP DRAIN
REACTOR COOLANT DRAIN TANK XTK-4B-WL
REACTOR COOLANT DRAIN TANK HEAT EXCHANGER XHE-12-WL AREA DRAIN FD-1
REACTOR COOLANT DRAIN TANK FLOOR DRAIN SUMP FD-8
FLOOR DRAIN SUMP FD-10
ACCUMULATOR TANK AREA DRAIN XTK-2B4-S1 FD-16
FLOOR DRAIN SUMP FD-12
FLOOR DRAIN SUMP FD-17
REACTOR BLDG. SUMP
TENDON GALLERY DRAINS
TENDON GALLERY SUMP (FOR SUMP PUMP DISCHARGE SEE DWG. D-302-821)
6" HVED
1½" FED
8" HVED
8" FED
ABBREVIATION KEY:-
FED - FLOOR AND EQUIPMENT DRAIN
HVED - HEATING AND VENTILATION EQUIPMENT DRAIN
DRAWING LEGIBILITY CLASS 1
SCEG CAD ENHANCED
FSAR Figure 9.3-5
SOUTH CAROLINA ELECTRIC & GAS COMPANY
VIRGIL C. SUMMER NUCLEAR STATION
BUILDING SERVICE FLOOR & EQUIPMENT DRAINS
STATION DRAINAGE FLOW DIAGRAM
REACTOR BUILDING
DESIGN ENGINEERING
DDJ
MGR
DDJ
E-911-101
B
8 5/8/97 RHM REVISED PER ECR-50799H RHM SY
7 09/29/96 JTS REVISED PER ECR-50677 MGR AJ
6 05/09/96 JTS REVISED PER ECR-50755 MGR RS
5 11/08 JRC REVISED PER ECR-71315 PAM MGC
4 05/05/97 JTS REVISED PER ECR-70975 MGR AKG
3 6/9/95 DDJ REVISED PER ECR-70028 MGR DDJ
NO. DATE BY REVISION DRG BY LEAD ENGR APPROVAL
1/4" = 1'-0"
0' 5' 10' 15' 20'

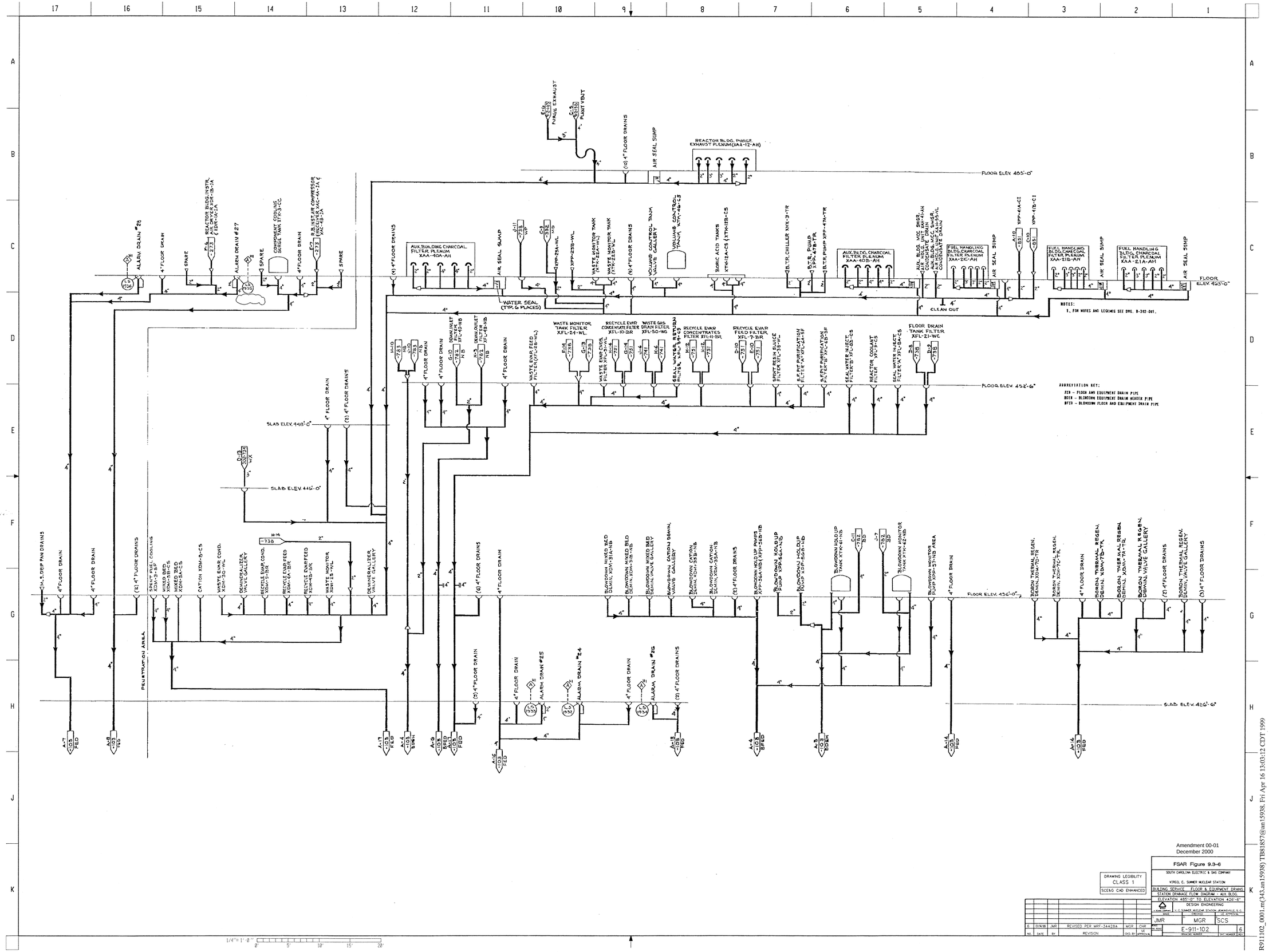

R911102_0001.m(343.an15938) TB81857@an15938, Fri Apr 16 13:03:12 CDT 1999

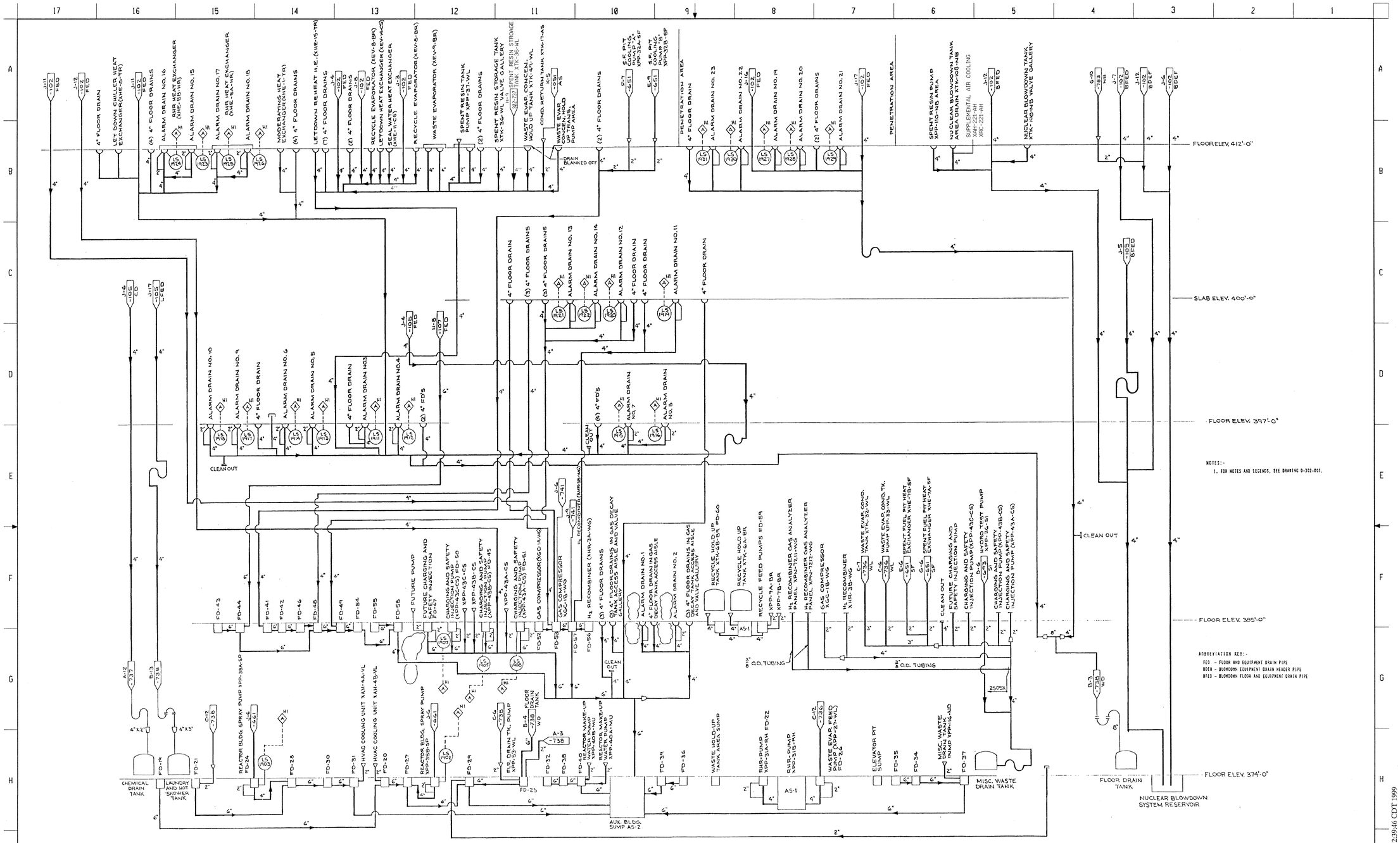

DRAWING LEGIBILITY CLASS 1

SCE&G CAD ENHANCED

FSAR Figure 9.3-7

SOUTH CAROLINA ELECTRIC & GAS COMPANY

VIRGIL C. SUMMER NUCLEAR STATION

BUILDING SERVICE FLOOR & EQUIPMENT DRAINS STATION DRAINAGE FLOW DIAGRAM-AUXILIARY BUILDING EL. 412'-0" TO EL. 374'-0"

DESIGN ENGINEERING

V. C. SUMMER NUCLEAR STATION JENKINSVILLE, S.C.

NO.	DATE	BY	REVISION	DWN BY	CHECKED	LEAD APPROVAL
12	3/17/96	JMR	REVISED PER MRF-34428A	MCR	SCS	
11	2/10/95	RHM	REVISED PER MRF-34428	MCR	TRC	
10	8/28/90	RHM	REVISED PER MRF-22009	MCR	JMC	
9	5/20/93	ACI	REVISED PER MRF-21737	MCR	JEW	

SCALE: NONE | CHECKED: ACI | LEAD APPROVAL: MGR | DWN BY: JEW

DRAWING NUMBER: E-911-103 | CUT HEADER REV: 12

R911103_0001.m(354.am15938) TB81857@am15938, Thu Apr 22 12:39:46 CDT 1999

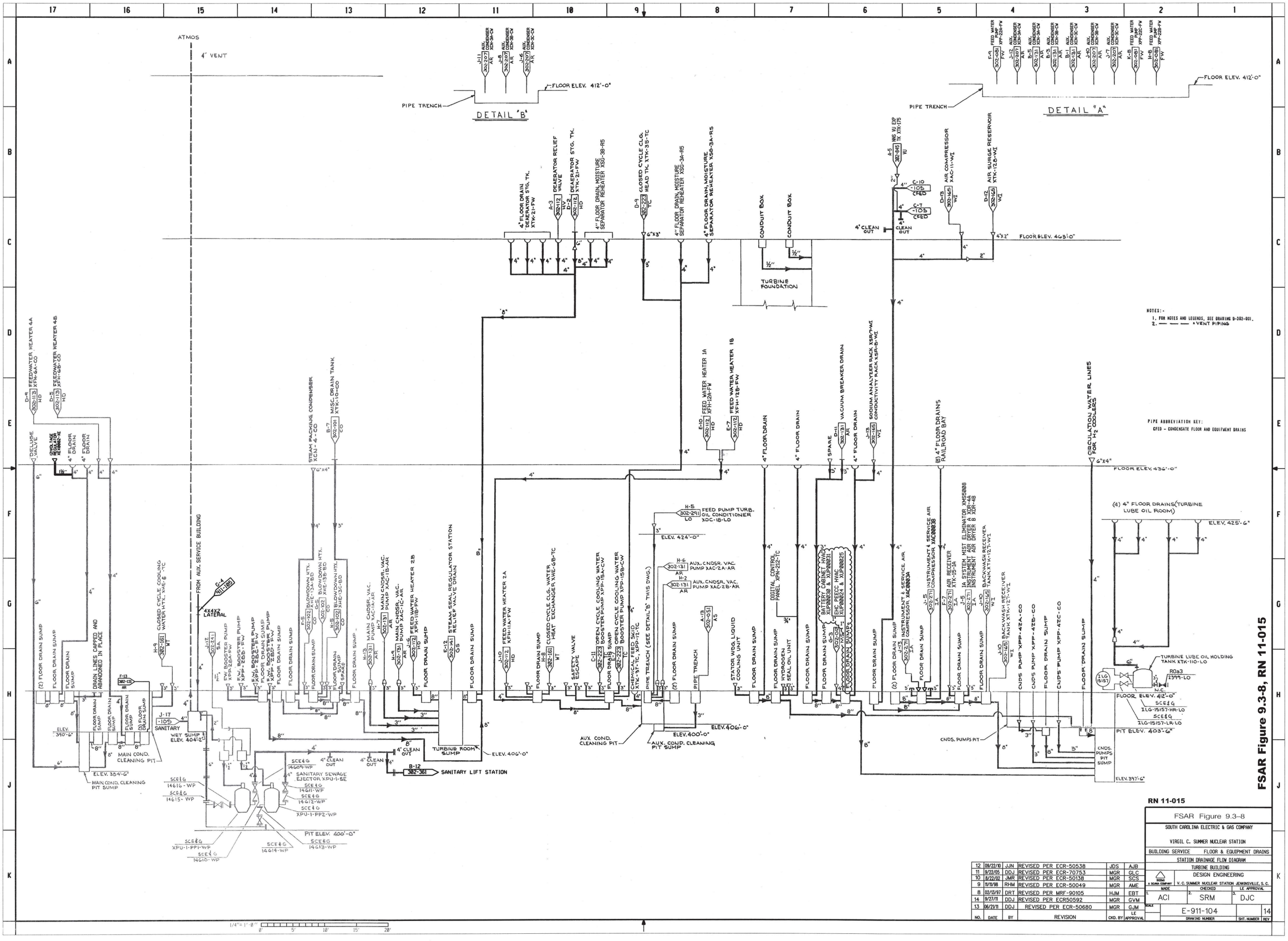

FSAR Figure 9.3-8, RN 11-015

RN 11-015

NO.	DATE	BY	REVISION	CKD. BY	LE APPROVAL
12	09/22/10	JJN	REVISED PER ECR-50538	JDS	AJB
11	9/22/05	DDJ	REVISED PER ECR-70753	MGR	GLC
10	8/22/02	JMR	REVISED PER ECR-50138	MGR	SCS
9	11/11/98	RHM	REVISED PER ECR-50049	MGR	AME
8	02/13/97	DRT	REVISED PER MRF-90105	HJM	EBT
14	9/27/11	DDJ	REVISED PER ECR50592	MGR	GVM
13	06/21/11	DDJ	REVISED PER ECR-50680	MGR	GJM

FSAR Figure 9.3-8

SOUTH CAROLINA ELECTRIC & GAS COMPANY

VIRGIL C. SUMMER NUCLEAR STATION

BUILDING SERVICE — FLOOR & EQUIPMENT DRAINS

STATION DRAINAGE FLOW DIAGRAM

TURBINE BUILDING

SCE&G A SCANA COMPANY — DESIGN ENGINEERING — V. C. SUMMER NUCLEAR STATION JENKINSVILLE, S. C.

MADE: ACI — CHECKED: SRM — LE APPROVAL: DJC

SCALE: 1/4"=1'-0"

DRAWING NUMBER: E-911-104 — SHT. NUMBER: 14 — REV.

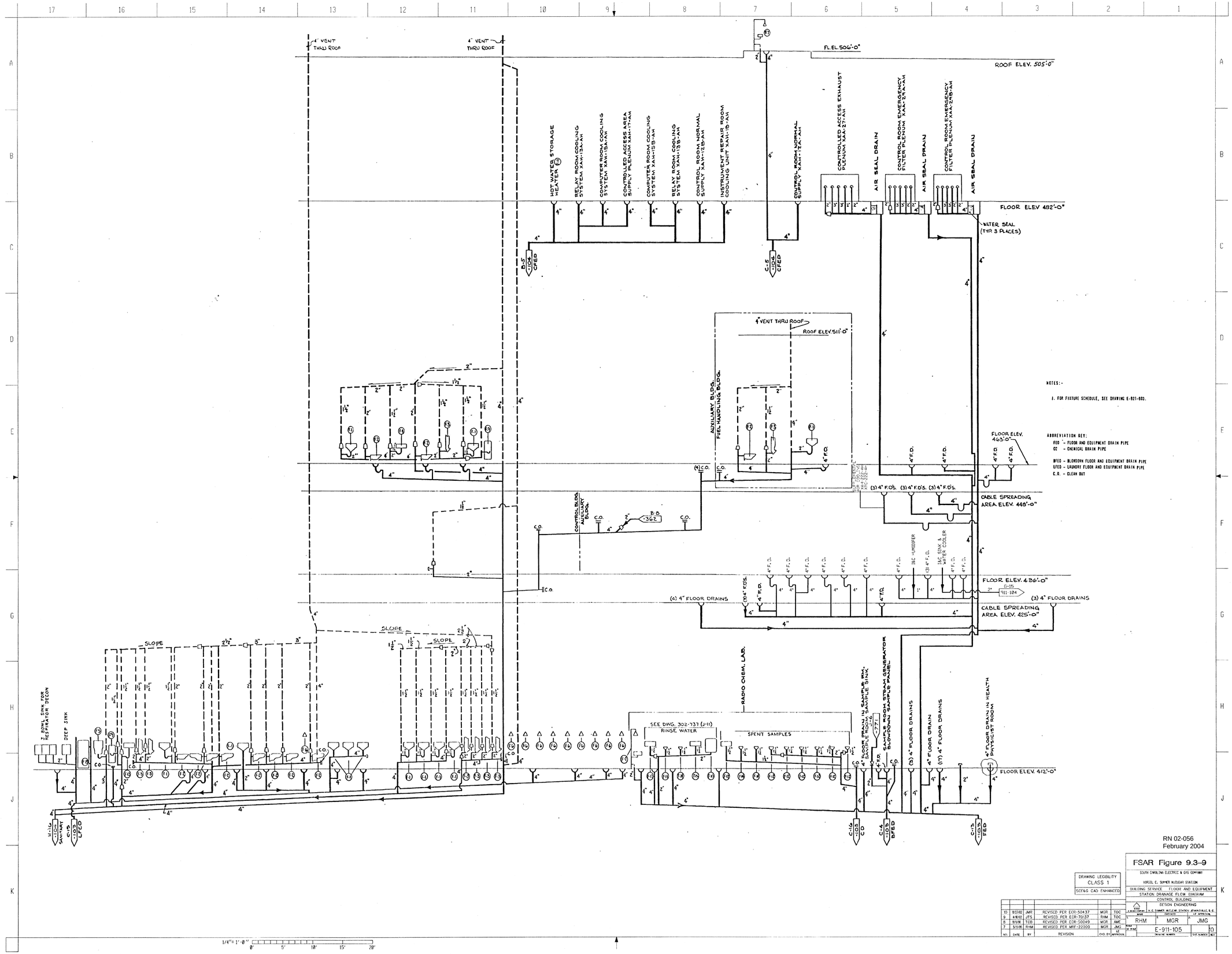

NOTES:-

1. FOR FIXTURE SCHEDULE, SEE DRAWING E-921-003.

ABBREVIATION KEY:

FED - FLOOR AND EQUIPMENT DRAIN PIPE
CC - CHEMICAL DRAIN PIPE
BFED - BLOWDOWN FLOOR AND EQUIPMENT DRAIN PIPE
LFED - LAUNDRY FLOOR AND EQUIPMENT DRAIN PIPE
C.O. - CLEAN OUT

RN 02-056
February 2004

FSAR Figure 9.3-9

DRAWING LEGIBILITY CLASS 1
SC&G CAD ENHANCED

SOUTH CAROLINA ELECTRIC & GAS COMPANY
VIRGIL C. SUMMER NUCLEAR STATION
BUILDING SERVICE FLOOR AND EQUIPMENT
STATION DRAINAGE FLOW DIAGRAM
CONTROL BUILDING
DESIGN ENGINEERING
V.C. SUMMER NUCLEAR STATION JENKINSVILLE, S.C.

NO.	DATE	BY	REVISION	CKD. BY	APPROVAL
10	8/27/02	JMR	REVISED PER ECR-50437	MGR	TOC
9	4/8/02	JTS	REVISED PER ECR-70137	RHM	TOC
8	8/5/98	TCB	REVISED PER ECR-50049	MGR	AME
7	5/5/95	RHM	REVISED PER MRF-22000	MGR	JMG

DRAWN BY RHM | CHECKED BY MGR | APPROVED BY JMG

DRAWING NUMBER E-911-105 | SHT NUMBER | REV 10

911105_0001.m Printed by JR14325 Wednesday August 28 2002 02:09:40 PM EDT

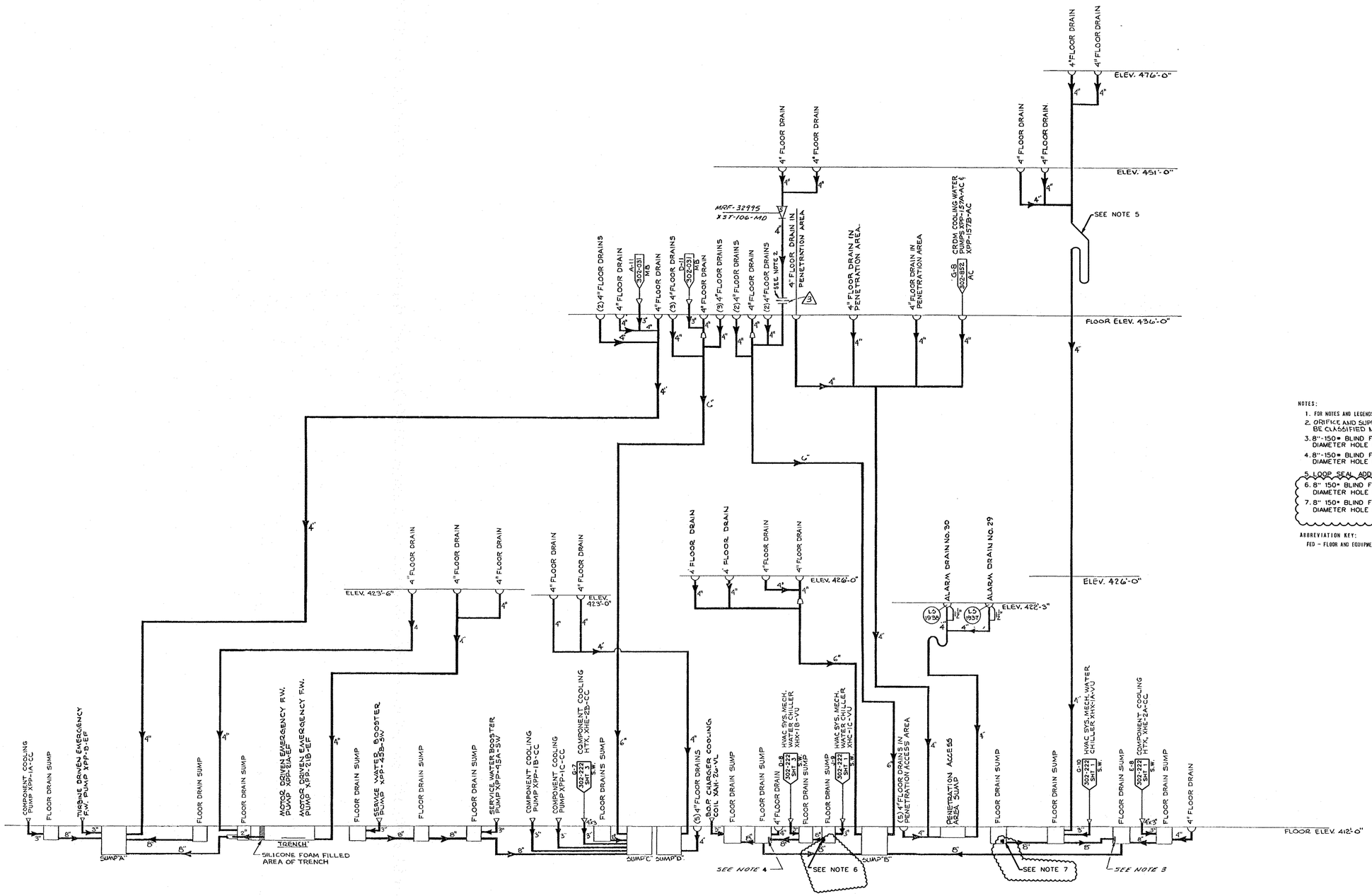

NOTES:

1. FOR NOTES AND LEGENDS SEE DWG. D-302-001.
2. ORIFICE AND SUPPORT, AREA C-8 TO BE CLASSIFIED NSR CL. 3
3. 8"-150# BLIND FLANGE WITH 11/32" DIAMETER HOLE PER ECR-50585.
4. 8"-150# BLIND FLANGE WITH 1/4" DIAMETER HOLE PER ECR-50585.
5. LOOP SEAL ADDED PER ECR-50585
6. 8" 150# BLIND FLANGE WITH 1/4" DIAMETER HOLE PER NC-16-04716.
7. 8" 150# BLIND FLANGE WITH 11/32" DIAMETER HOLE PER NC-16-04716.

ABBREVIATION KEY:

FED – FLOOR AND EQUIPMENT DRAIN PIPE

DRAWING LEGIBILITY CLASS 1

NUCLEAR SAFETY RELATED

NO.	DATE	BY	REVISION	CKD. BY	APPROVAL
9	1/31/17	KO	REVISED PER NC-16-04716	RM	RB
8	3/18/08	JTS	REVISED PER ECR 50585	MGR	RS
7	1/6/08	JNC	REVISED PER ECR-7225	PAH	MGC
6	10/02/01	DDJ	REVISED PER ECR-70028	MGR	DDJ

FSAR Figure 9.3-10

SOUTH CAROLINA ELECTRIC & GAS COMPANY

VIRGIL C. SUMMER NUCLEAR STATION

BUILDING SERVICE — FLOOR & EQUIPMENT DRAINS

STATION DRAINAGE FLOW DIAGRAM

INTERMEDIATE BLDG.

DESIGN ENGINEERING

S.C. ELECTRIC & GAS CO. — V. C. SUMMER NUCLEAR STATION, JENKINSVILLE, S. C.

DRAWN BY	CHECKED BY	APPROVED BY
DDJ	MGR	DDJ

DRAWING NUMBER: E-911-106 — SHT. NUMBER: 9 — REV. NUMBER: 9

1/4" = 1'-0"

NOTES:
1. FOR NOTES AND LEGENDS, SEE DRAWING D-302-001.

PIPE ABBREVIATION KEY:
FED-FLOOR AND EQUIPMENT DRAINS.

DRAWING LEGIBILITY
CLASS 1
SCENG CAD ENHANCED

NO.	DATE	BY	REVISION	CHK BY	APPROVAL
10	9/8/98	DDJ	REVISED PER EOR-50550	MGR	RJR
9	5/2/93	TGB	REVISED PER EOR-50503	MGR	DLM
8	10/30/89	TGB	REVISED PER EOR-50306	RHM	MWD
7	01-26-83	SRM	REVISED PER MOF-20993	RHM	DJC
6	09-24-8	AVN	REVISED PER OGS-27273	RHM	WDS

FSAR Figure 9.3-11
SOUTH CAROLINA ELECTRIC & GAS COMPANY
VIRGIL C. SUMMER NUCLEAR STATION
BUILDING SERVICE — PLUMBING
STATION DRAINAGE FLOW DIAGRAM
FUEL HANDLING BUILDING
DESIGN ENGINEERING
U. S. NUCLEAR REGULATORY COMMISSION, DIVISION OF L.W.R. REVIEW
DRAWN BY: AVN | CHK BY: RHM | APPROVED BY: WDS
DWG. NO. E-911-107 | REV. 10
SHEET 1 OF 1 | U.S. NRC DOCKET NO. 50-395

SYSTEM DATA					
#	GPM	PSIG	°F	BY	REMARKS
1	50	35	100	DJK	
2	50	20	100	DJK	
3	50	30	100	DJK	
4	50	30	100	DJK	
5	50	20	100	DJK	
6	100	40	100	PLL	
7	50	20	100	DJK	
8	150	40	100	PLL	
9	50	40	100	PLL	
10	75	55	100	DJK	

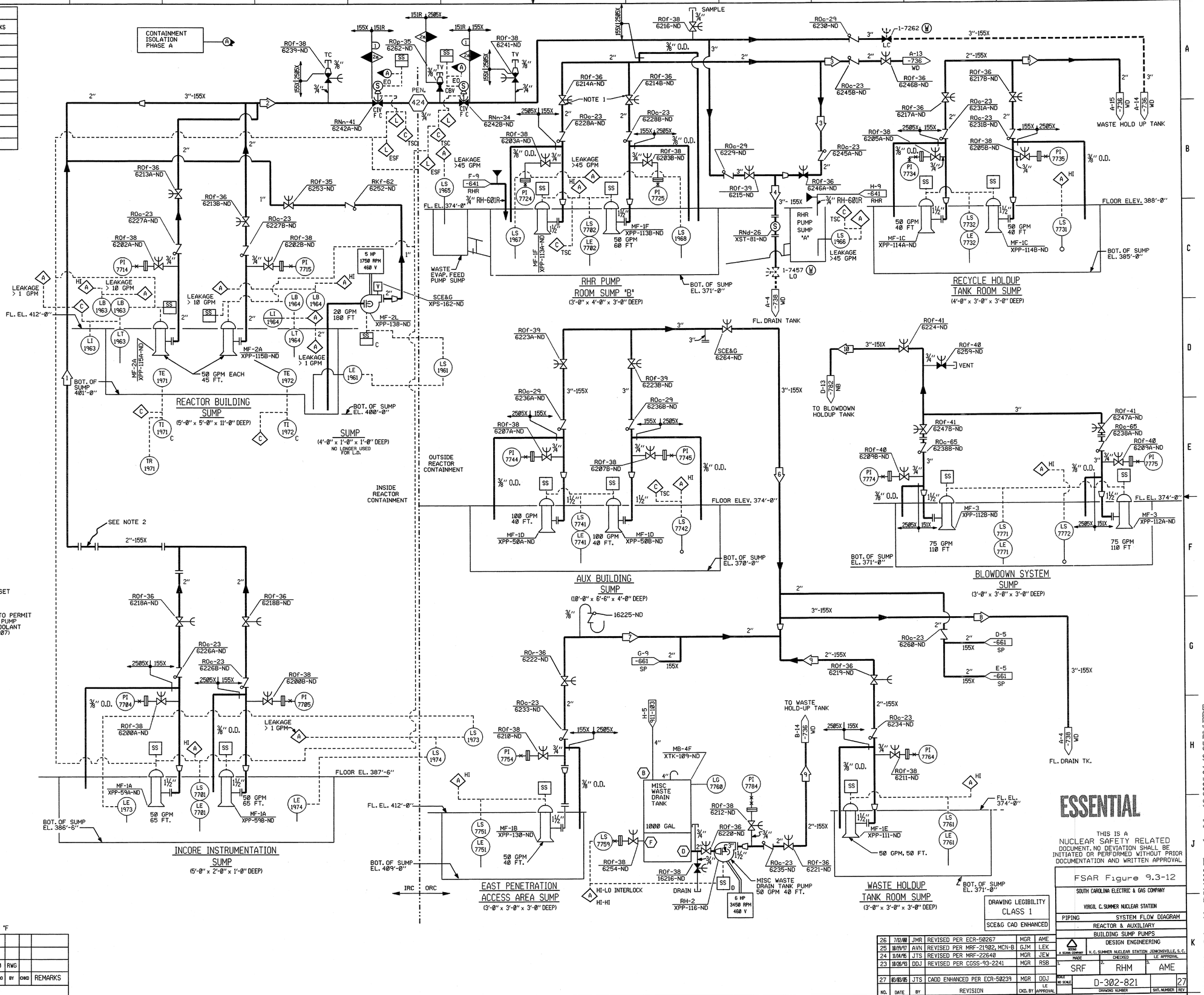

NOTE:

1. THESE VALVES SHALL BE SET TO OBTAIN FLOW RATE OF 50 GPM MAXIMUM.
2. REMOVABLE SPOOL PIECE TO PERMIT INCORE INSTRUMENT SUMP PUMP DISCHARGE TO REACTOR COOLANT DRAIN TANK (PER MRF 20707)

HYDRO TEST TEMP. 60 °F

1	100	145	125	200	30 MIN	160	RWG		
⊞	PSIG	°F	PSIG	°F	DURATION	HYDRO	BY	CKKD	REMARKS
	NORMAL		UPSET						

DESIGN DATA

1/4"=1'-0"

ESSENTIAL

THIS IS A NUCLEAR SAFETY RELATED DOCUMENT. NO DEVIATION SHALL BE INITIATED OR PERFORMED WITHOUT PRIOR DOCUMENTATION AND WRITTEN APPROVAL.

NO.	DATE	BY	REVISION	CKD. BY	LE APPROVAL
26	7/12/00	JMR	REVISED PER ECR-50267	MGR	AME
25	10/15/97	AVN	REVISED PER MRF-21902, MCN-B	GJM	LEK
24	11/14/96	JTS	REVISED PER MRF-22640	MGR	JEW
23	10/26/93	DDJ	REVISED PER CGSS-93-2241	MGR	RSB
27	10/03/05	JTS	CADD ENHANCED PER ECR-50239	MGR	DDJ

DRAWING LEGIBILITY CLASS 1

SCE&G CAD ENHANCED

FSAR Figure 9.3-12

SOUTH CAROLINA ELECTRIC & GAS COMPANY

VIRGIL C. SUMMER NUCLEAR STATION

PIPING — SYSTEM FLOW DIAGRAM

REACTOR & AUXILIARY BUILDING SUMP PUMPS

DESIGN ENGINEERING

SCE&G A GENERAL COMPANY — V. C. SUMMER NUCLEAR STATION JENKINSVILLE, S. C.

MADE: SRF — CHECKED: RHM — LE APPROVAL: AME

SCALE: NO SCALE — DRAWING NUMBER: D-302-821 — SHT. NUMBER: 27 — REV: K

302821_0001.m Printed by DJ14998 Thursday May 12 2005 04:43:27 PM EDT

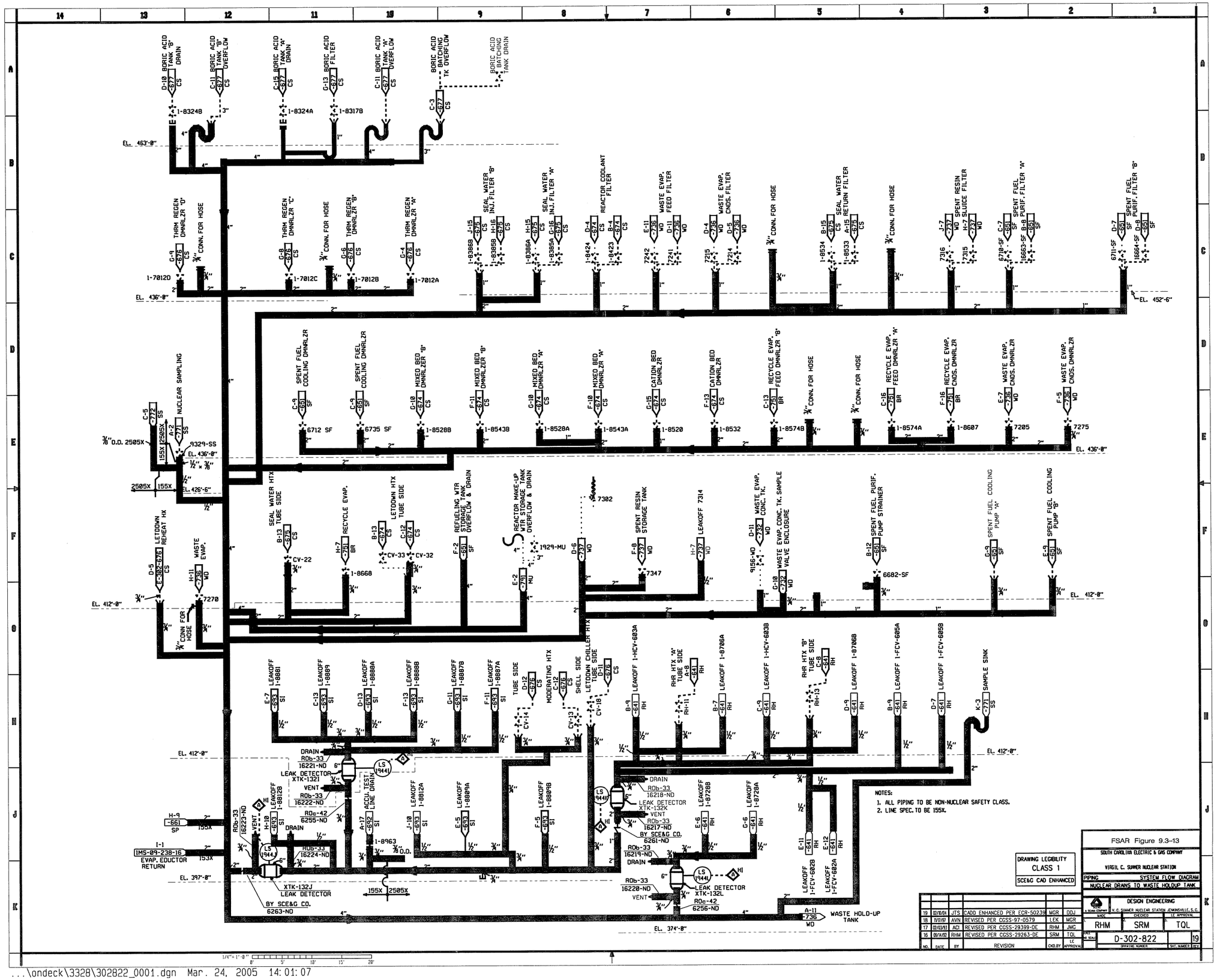

...\ondeck\3328\302822_0001.dgn Mar. 24, 2005 14:01:07

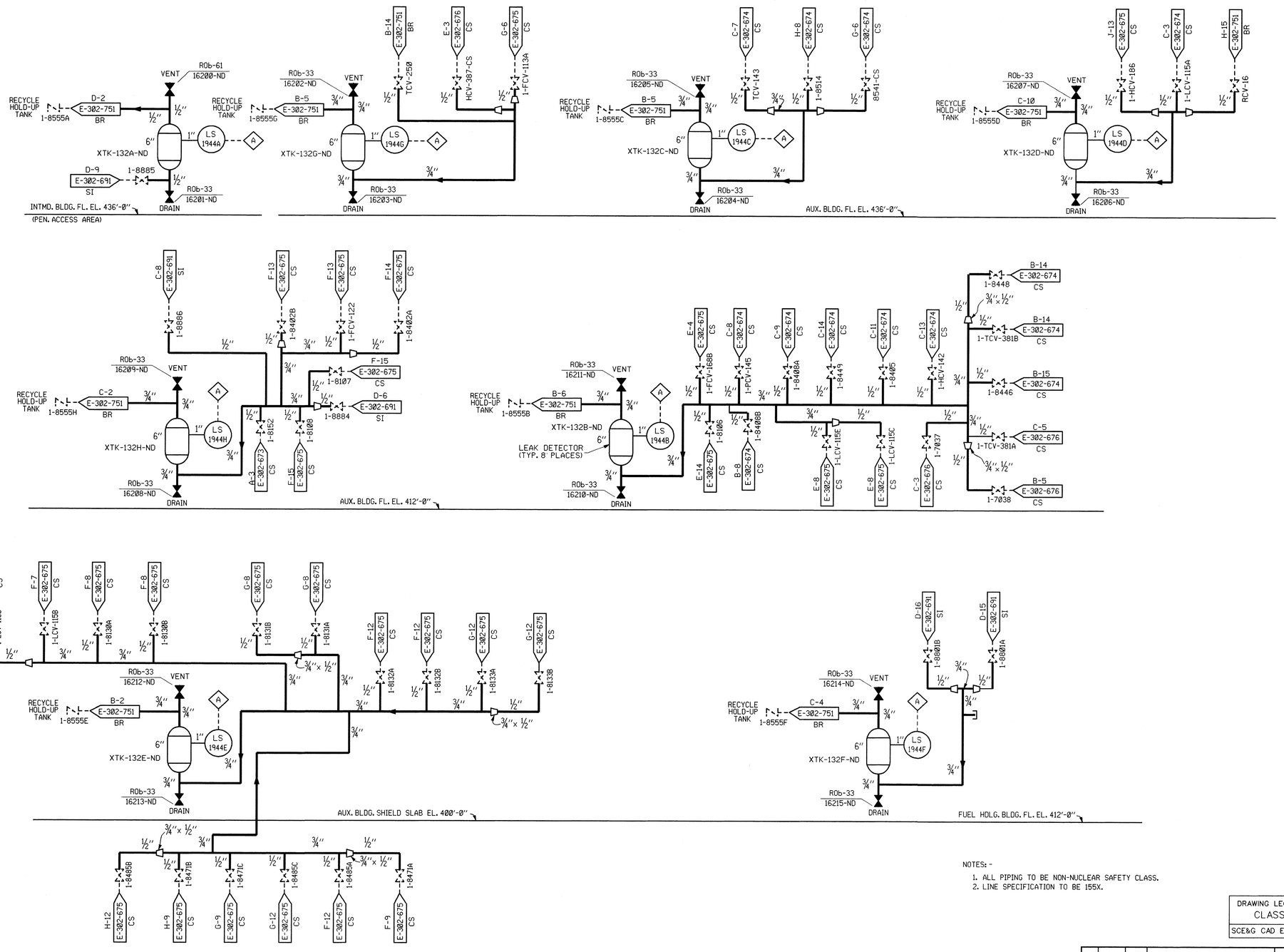

NOTES: -

1. ALL PIPING TO BE NON-NUCLEAR SAFETY CLASS.
2. LINE SPECIFICATION TO BE 155X.

DRAWING LEGIBILITY
CLASS 1
SCE&G CAD ENHANCED

NO.	DATE	BY	REVISION	CKD. BY	LE APPROVAL
7	02/02/05	JTS	CADD ENHANCED PER ECR-50239	MGR	DDJ
6	11/12/97	AVN	REVISED PER CGSS-97-0579	LEK	MGR

FSAR Figure 9.3-13A

SOUTH CAROLINA ELECTRIC & GAS COMPANY

VIRGIL C. SUMMER NUCLEAR STATION

PIPING — SYSTEM FLOW DIAGRAM

NUCLEAR VALVE LEAK-OFF DRAINS TO RECYCLE HOLDUP TANK

SCE&G A SCANA COMPANY — DESIGN ENGINEERING — V. C. SUMMER NUCLEAR STATION JENKINSVILLE, S. C.

MADE: A.V.N. — CHECKED: L.E.K. — LE APPROVAL: M.G.R.

SCALE: NO SCALE

DRAWING NUMBER: D-302-823 — SHT. NUMBER: 7 — REV:

1/4" = 1'-0" 0' 5' 10' 15' 20'

SYSTEM DATA

NO	GPM	FT	°F	BY	REMARKS
1	50	70	120	JJW	
2	50	70	120	JJW	
3	75	70	150	JJW	
4	50	30	150	JJW	
5	500	100	120	SCE&G	
6	1500	100	120	JJW	1700 GPM FROM FIRE PROTECT.
7	75	70	150	JJW	
8	75	70	150	JJW	
9	250	80	150	JJW	
10	25	50	100	JJW	
11	20	50	100	JJW	
12	20	50	100	JJW	
13	25	50	100	JJW	
14	30	30	100	JJW	
15	40	50	100	JJW	
16	30	30	100	JJW	

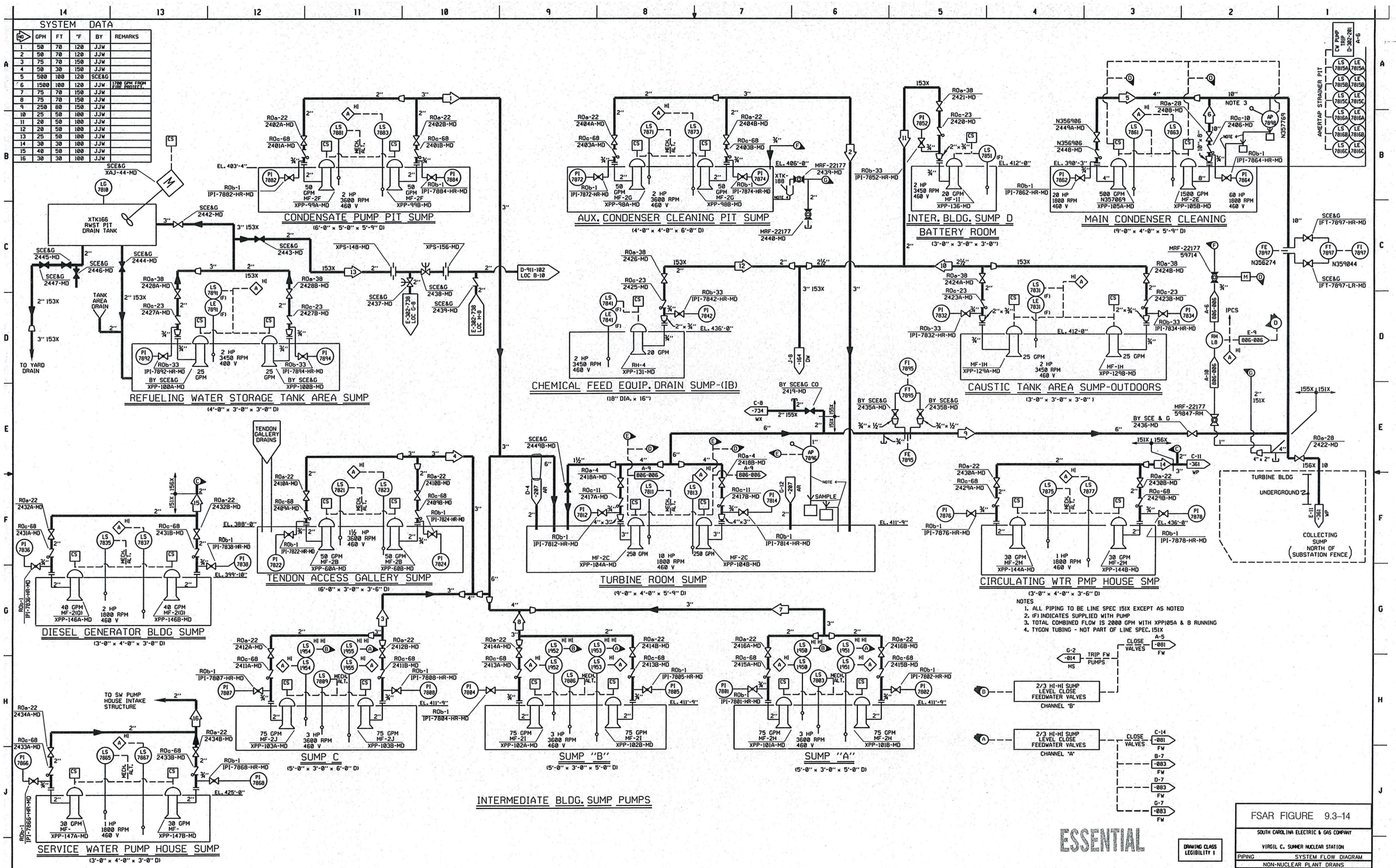

NOTES
1. ALL PIPING TO BE LINE SPEC 151X EXCEPT AS NOTED
2. (F) INDICATES SUPPLIED WITH PUMP
3. TOTAL COMBINED FLOW IS 2000 GPM WITH XPP105A & B RUNNING
4. TYGON TUBING - NOT PART OF LINE SPEC. 151X

ESSENTIAL

DRAWING CLASS LEGIBILITY 1

DESIGN DATA

HYDROSTATIC TEST TEMP - 60°

P	PSIG.	F	PSIG.	F	DURATION	HY-DRO	BY	CHK'D	REMARKS
ALL	75	150	—	—	—	—	JJW	—	ENTIRE SYSTEM

NORMAL — UPSET

NO.	DATE	BY	REVISION	CKD. BY	LE APPROVAL
29	3/9/16	JMR	REVISED PER ECR-72140	RHM	DB
28	02/09/2010	JTS	REVISED PER ECR-71250	MGR	DDJ
27	09/22/03	JTS	CADD ENHANCED PER ECR-50239	DDJ	RHM
26	01/10/98	JTS	REVISED PER CGSS-97-0369	LEK	MGR
25	7/25/96	DDJ	REVISED PER MRF-22177	MGR	JLL
30	12/11/17	JMR	REVISED PER ECR-71635	RHM	AL

FSAR FIGURE 9.3-14

SOUTH CAROLINA ELECTRIC & GAS COMPANY

VIRGIL C. SUMMER NUCLEAR STATION

PIPING — SYSTEM FLOW DIAGRAM

NON-NUCLEAR PLANT DRAINS

SCE&G A SCANA COMPANY — DESIGN ENGINEERING — V. C. SUMMER NUCLEAR STATION JENKINSVILLE S. C.

MADE: SRF — CHECKED: RHM — LE APPROVAL: DDS

SCALE NO SCALE — D-302-352 (DRAWING NUMBER) — SHT. NUMBER — REV. 30

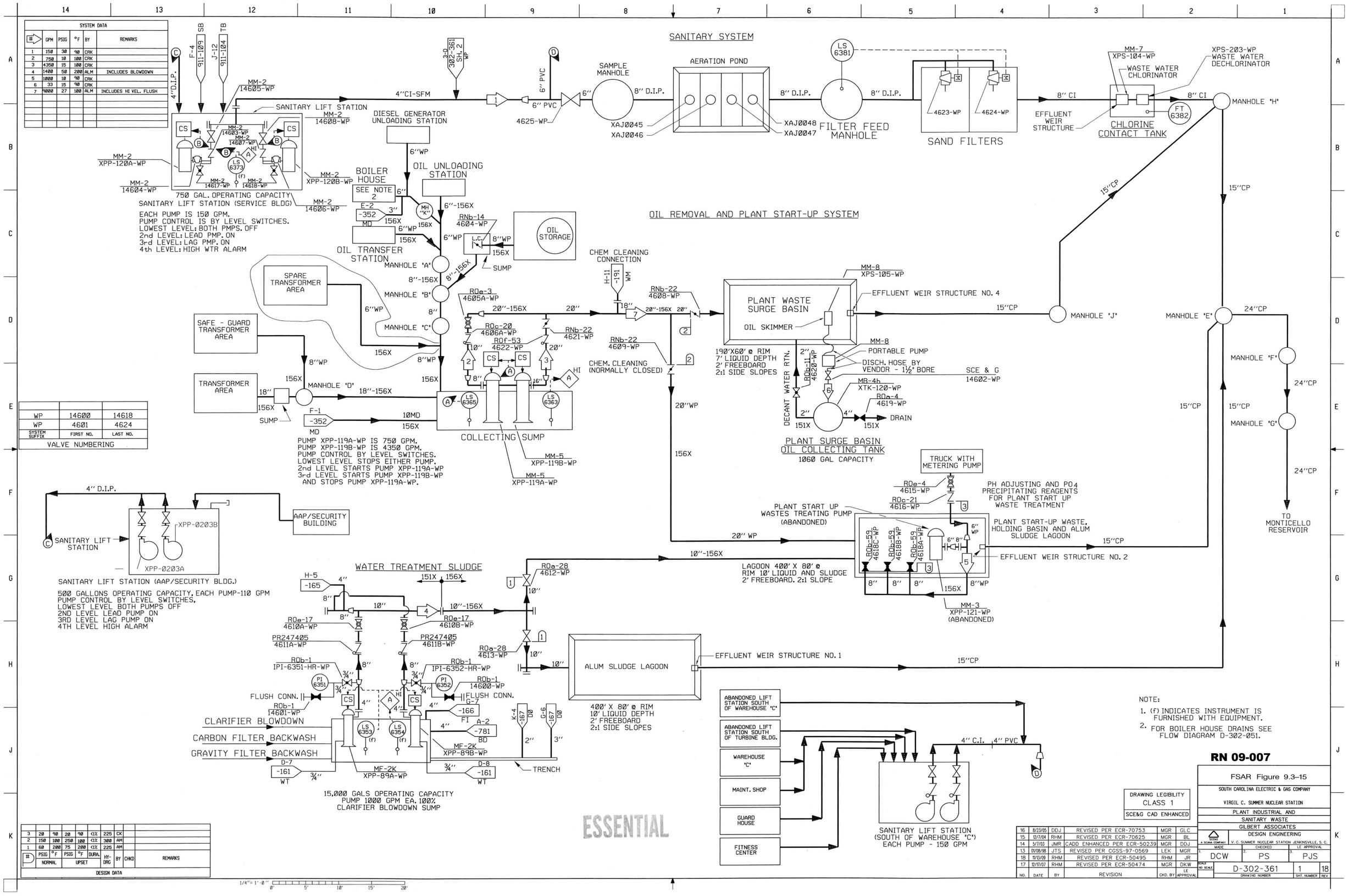

SYSTEM DATA					
#	GPM	PSIG	°F	BY	REMARKS
1	150	30	90	CRK	
2	750	10	100	CRK	
3	4350	15	100	CRK	
4	1400	50	200	ALM	INCLUDES BLOWDOWN
5	1000	10	90	CRK	
6	33	15	90	CRK	
7	9000	27	100	ALM	INCLUDES HI VEL. FLUSH

VALVE NUMBERING		
WP	14600	14618
WP	4601	4624
SYSTEM SUFFIX	FIRST NO.	LAST NO.

DESIGN DATA										
#	NORMAL PSIG	NORMAL °F	UPSET PSIG	UPSET °F	DURA.	HY-DRG	BY	CHKD	REMARKS
3	20	90	20	90	<1%	225	CK		
2	150	100	250	100	<1%	300	AM		
1	60	200	75	200	<1%	225	AM		

NOTE:
1. (f) INDICATES INSTRUMENT IS FURNISHED WITH EQUIPMENT.
2. FOR BOILER HOUSE DRAINS SEE FLOW DIAGRAM D-302-051.

RN 09-007

NO.	DATE	BY	REVISION	CKD. BY	LE APPROVAL
16	8/23/05	DDJ	REVISED PER ECR-70753	MGR	GLC
15	12/7/04	RHM	REVISED PER ECR-70625	MGR	BL
14	5/7/03	JMR	CADD ENHANCED PER ECR-50239	MGR	DDJ
13	01/08/98	JTS	REVISED PER CGSS-97-0569	LEK	MGR
18	11/13/09	RHM	REVISED PER ECR-50495	RHM	JR
17	12/17/07	RHM	REVISED PER ECR-50474	MGR	DKW

DRAWING LEGIBILITY CLASS 1
SCE&G CAD ENHANCED

FSAR Figure 9.3-15

SOUTH CAROLINA ELECTRIC & GAS COMPANY
VIRGIL C. SUMMER NUCLEAR STATION
PLANT INDUSTRIAL AND SANITARY WASTE
GILBERT ASSOCIATES
SCANA — DESIGN ENGINEERING
V. C. SUMMER NUCLEAR STATION JENKINSVILLE, S. C.

MADE: DCW | CHECKED: PS | LE APPROVAL: PJS

SCALE: NO SCALE | DRAWING NUMBER: D-302-361 | SHT. NUMBER: 1 | REV: 18

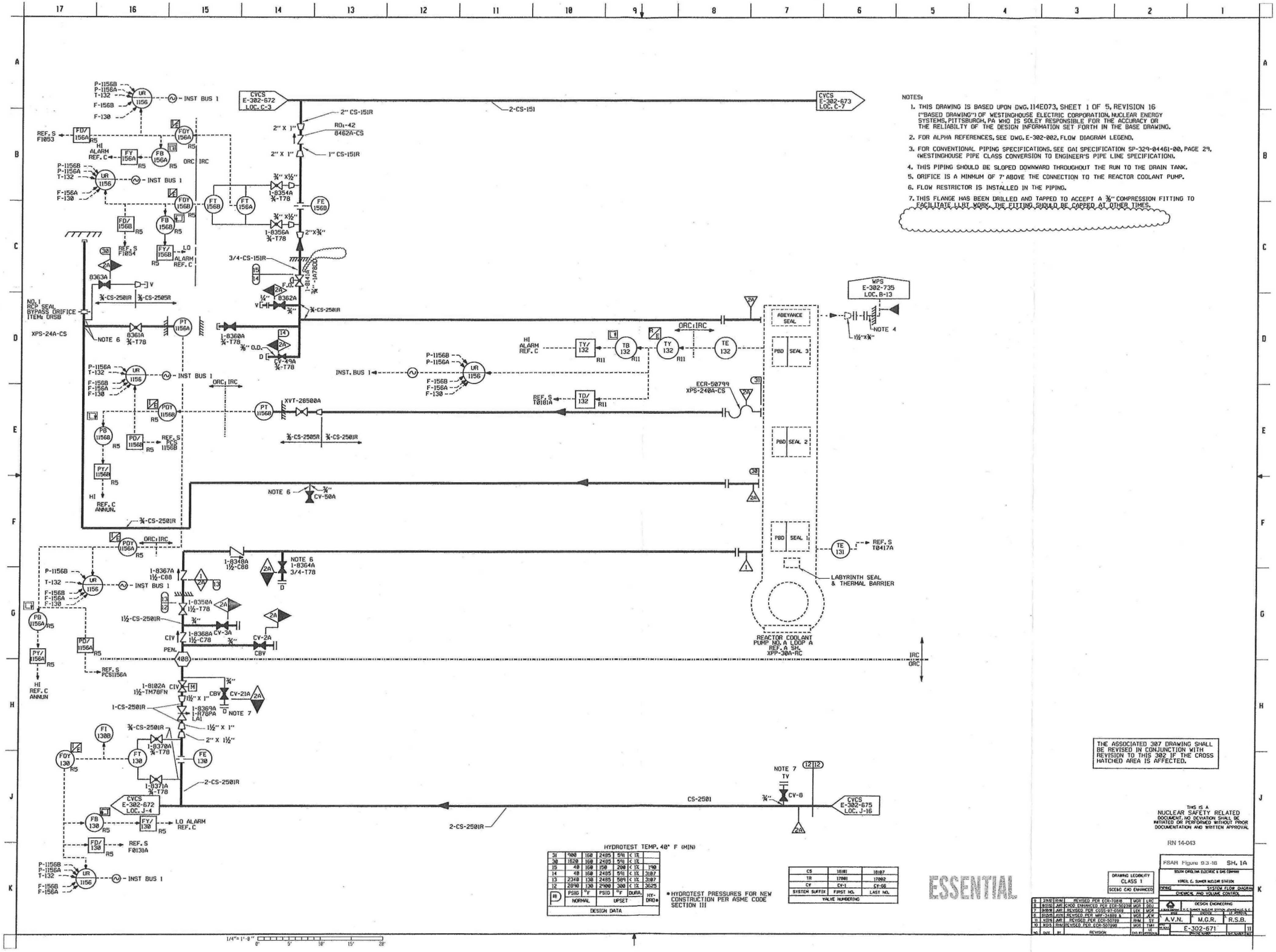

NOTES:

1. THIS DRAWING IS BASED UPON DWG. 114E073, SHEET 1 OF 5, REVISION 16 ("BASED DRAWING") OF WESTINGHOUSE ELECTRIC CORPORATION, NUCLEAR ENERGY SYSTEMS, PITTSBURGH, PA WHO IS SOLEY RESPONSIBLE FOR THE ACCURACY OR THE RELIABILTY OF THE DESIGN INFORMATION SET FORTH IN THE BASE DRAWING.
2. FOR ALPHA REFERENCES, SEE DWG. E-302-002, FLOW DIAGRAM LEGEND.
3. FOR CONVENTIONAL PIPING SPECIFICATIONS, SEE GAI SPECIFICATION SP-329-04461-00, PAGE 29, (WESTINGHOUSE PIPE CLASS CONVERSION TO ENGINEER'S PIPE LINE SPECIFICATION).
4. THIS PIPING SHOULD BE SLOPED DOWNWARD THROUGHOUT THE RUN TO THE DRAIN TANK.
5. ORIFICE IS A MINMUM OF 7' ABOVE THE CONNECTION TO THE REACTOR COOLANT PUMP.
6. FLOW RESTRICTOR IS INSTALLED IN THE PIPING.
7. THIS FLANGE HAS BEEN DRILLED AND TAPPED TO ACCEPT A ⅜" COMPRESSION FITTING TO FACILITATE LIST WORK. THE FITTING SHOULD BE CAPPED AT OTHER TIMES.

HYDROTEST TEMP. 40° F (MIN)

31	900	150	2485	591	< 1%		
30	1620	150	2485	591	< 1%		
15	40	150	150	200	< 1%	190	
14	40	150	2485	591	< 1%	3107	
13	2348	130	2485	589	< 1%	3107	
12	2090	130	2900	300	< 1%	3625	
#	PSIG	°F	PSIG	°F	DURA.	HYDRO*	
	NORMAL		UPSET				
DESIGN DATA							

*HYDROTEST PRESSURES FOR NEW CONSTRUCTION PER ASME CODE SECTION III

CS	18181	18187
TR	17881	17882
CY	CY-1	CY-66
SYSTEM SUFFIX	FIRST NO.	LAST NO.
VALVE NUMBERING		

THE ASSOCIATED 307 DRAWING SHALL BE REVISED IN CONJUNCTION WITH REVISION TO THIS 302 IF THE CROSS HATCHED AREA IS AFFECTED.

THIS IS A NUCLEAR SAFETY RELATED DOCUMENT. NO DEVIATION SHALL BE INITIATED OR PERFORMED WITHOUT PRIOR DOCUMENTATION AND WRITTEN APPROVAL

RN 14-043

ESSENTIAL

9	3/9/81	RHM	REVISED PER ECR-70818	MGR LEC
8	8/21/81	AR	ICAD ENHANCED PER ECR-50239	MGR DCJ
7	3/19/91	AR	REVISED PER CCPS-91-0569	LCK MGR
6	01/29/91	AVN	REVISED PER MRF-34809 &	MGR JCW
11	4/29/14	AR	REVISED PER ECR-50799	RHM SY
10	3/2/13	RHM	REVISED PER ECR-50799	MGR TMH
NO.	DATE	BY	REVISION	CHK BY APPROVAL

DRAWING LEGIBILITY CLASS 1
SCEGC CAD ENHANCED

FSAR Figure 9.3-16 SH. 1A

SOUTH CAROLINA ELECTRIC & GAS COMPANY
VIRGIL C. SUMER NUCLEAR STATION

DRAWING: SYSTEM FLOW DIAGRAM
CHEMICAL AND VOLUME CONTROL

DESIGN ENGINEERING
A JOINT VENTURE OF S.C. SUMMER NUCLEAR STATION CONTRACTORS, L.P.

DRAWN	CHECKED	APPROVED
A.V.N.	M.G.R.	R.S.B.

E-302-671 — REVISION 11

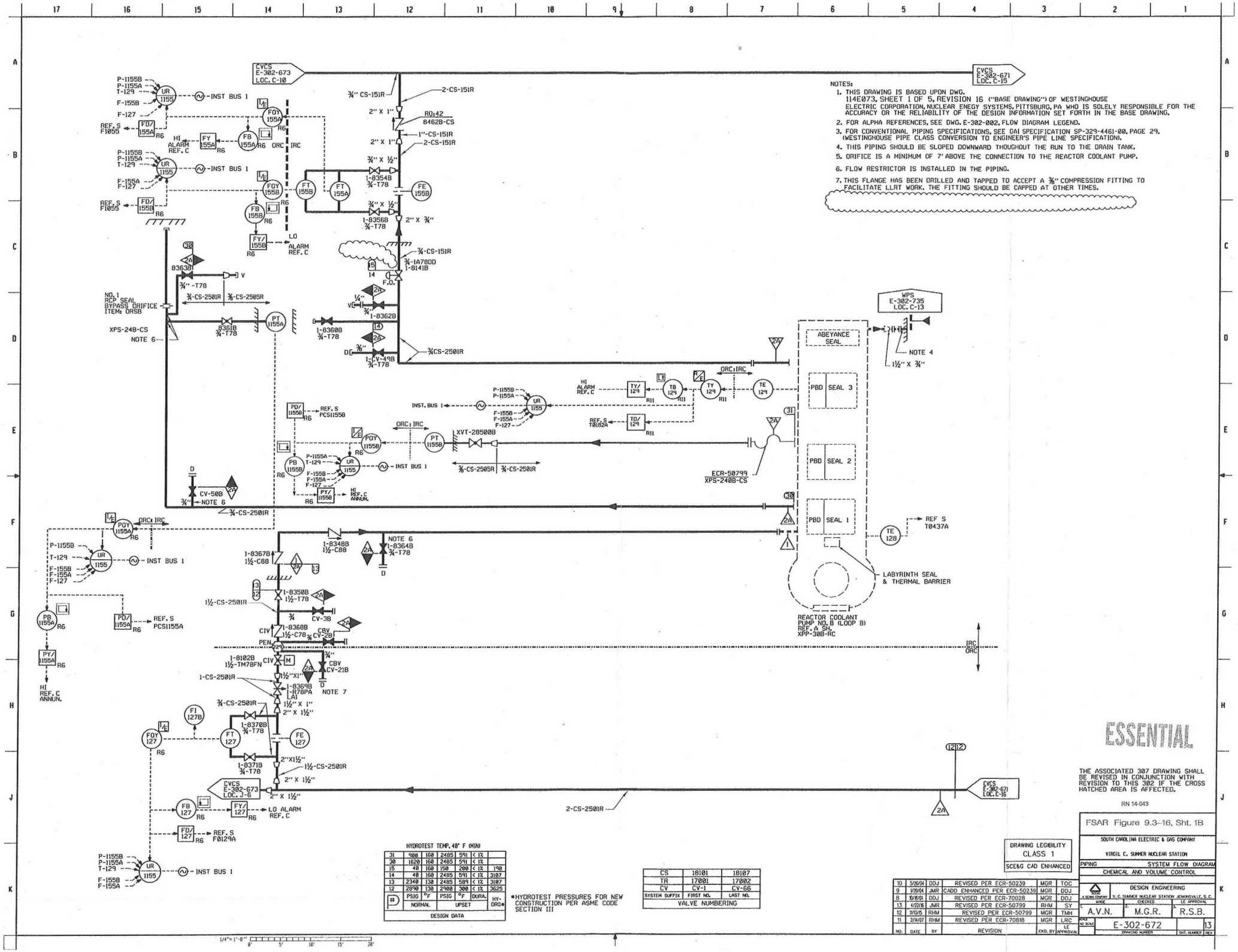

NO.	DATE	BY	REVISION	CKD. BY	LE APPROVAL
10	5/26/04	DDJ	REVISED PER ECR-50239	MGR	TOC
9	1/26/04	JMR	CADD ENHANCED PER ECR-50239	MGR	DDJ
8	10/8/01	DDJ	REVISED PER ECR-70028	MGR	DDJ
13	4/22/16	JMR	REVISED PER ECR-50799	RHM	SY
12	11/10/5	RHM	REVISED PER ECR-50799	MGR	TMH
11	2/14/07	RHM	REVISED PER ECR-70818	MGR	LRC

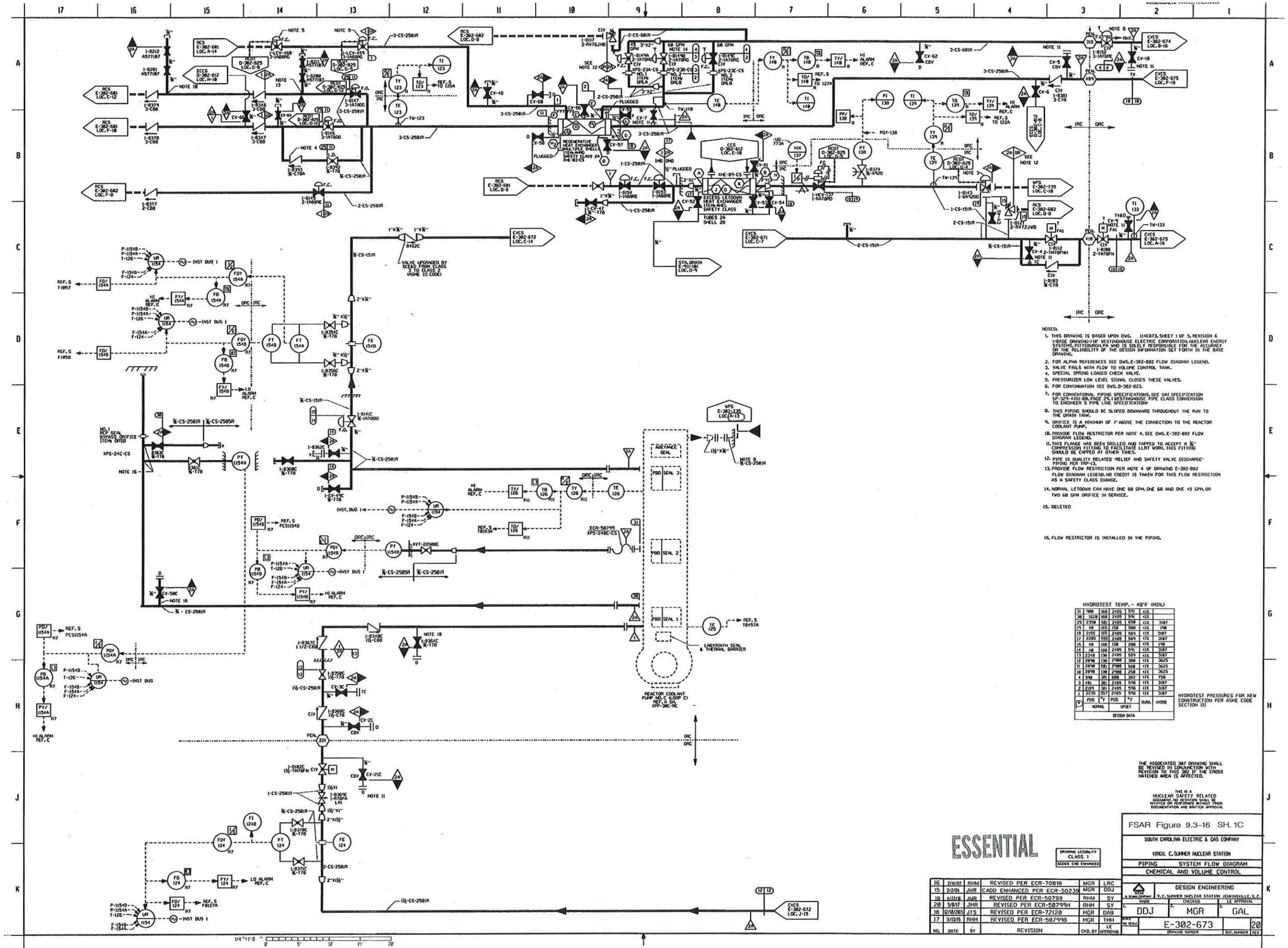

NOTES:

1. THIS DRAWING IS BASED UPON DWG. 114E073, SHEET 1 OF 5, REVISION 6 (BASE DRAWING) OF WESTINGHOUSE ELECTRIC CORPORATION, NUCLEAR ENERGY SYSTEMS, PITTSBURGH, PA WHO IS SOLELY RESPONSIBLE FOR THE ACCURACY OR THE RELIABILITY OF THE DESIGN INFORMATION SET FORTH IN THE BASE DRAWING.
2. FOR ALPHA REFERENCES SEE DWG. E-302-002 FLOW DIAGRAM LEGEND.
3. VALVE FAILS WITH FLOW TO VOLUME CONTROL TANK.
4. SPECIAL SPRING LOADED CHECK VALVE.
5. PRESSURIZER LOW LEVEL SIGNAL CLOSES THESE VALVES.
6. FOR CONTINUATION SEE DWG. D-302-023.
7. FOR CONVENTIONAL PIPING SPECIFICATIONS, SEE GAI SPECIFICATION SP-329-4481-00, PAGE 2% (WESTINGHOUSE PIPE CLASS CONVERSION TO ENGINEER'S PIPE LINE SPECIFICATION
8. THIS PIPING SHOULD BE SLOPED DOWNWARD THROUGHOUT THE RUN TO THE DRAIN TANK.
9. ORIFICE IS A MINIMUM OF 7' ABOVE THE CONNECTION TO THE REACTOR COOLANT PUMP.
10. PROVIDE FLOW RESTRICTOR PER NOTE 4. SEE DWG. E-302-002 FLOW DIAGRAM LEGEND.
11. THIS FLANGE HAS BEEN DRILLED AND TAPPED TO ACCEPT A ¾" COMPRESSION FITTING TO FACILITATE LLRT WORK. THIS FITTING SHOULD BE CAPPED AT OTHER TIMES.
12. PIPE IS QUALITY RELATED "RELIEF AND SAFETY VALVE DISCHARGE" PIPING PER TRP-13.
13. PROVIDE FLOW RESTRICTION PER NOTE 4 OF DRAWING E-302-002 FLOW DIAGRAM LEGEND. NO CREDIT IS TAKEN FOR THIS FLOW RESTRICTION AS A SAFETY CLASS CHANGE.
14. NORMAL LETDOWN CAN HAVE ONE 60 GPM, ONE 60 AND ONE 45 GPM, OR TWO 60 GPM ORIFICE IN SERVICE.
15. DELETED
16. FLOW RESTRICTOR IS INSTALLED IN THE PIPING.

HYDROTEST TEMP. - 40°F (MIN.)

31	900	168	2485	596	412	
30	1620	168	2485	596	412	
25	2250	581	2485	656	412	3187
19	48	155	150	300	412	190
18	2155	155	2485	564	412	3187
17	2205	555	2485	564	412	3187
15	48	150	150	200	412	190
14	48	150	2485	564	412	3187
13	2310	130	2485	564	412	3187
12	2090	130	2500	300	412	3625
11	2090	130	2500	568	412	3625
10	2090	130	2500	258	412	3625
4	390	301	600	302	412	750
3	481	301	2485	596	412	3187
2	2185	301	2485	596	412	3187
1	2235	557	2485	596	412	3187
	PSIG	°F	PSIG	°F	DUPA	HYDRO
	NORMAL		UPSET			
	DESIGN DATA					

HYDROTEST PRESSURES FOR NEW CONSTRUCTION PER ASME CODE SECTION III

THE ASSOCIATED 307 DRAWING SHALL BE REVISED IN CONJUNCTION WITH REVISION TO THIS 302 IF THE CROSS HATCHED AREA IS AFFECTED.

THIS IS A NUCLEAR SAFETY RELATED DOCUMENT. NO DEVIATION SHALL BE INITIATED OR PERFORMED WITHOUT PRIOR DOCUMENTATION AND WRITTEN APPROVAL

DRAWING LEGIBILITY CLASS 1
SCEGQ CAD ENHANCED

NO.	DATE	BY	REVISION	CKD. BY	LE APPROVAL
16	2/14/07	RHM	REVISED PER ECR-70818	MGR	LRC
15	2/2/04	JMR	CADD ENHANCED PER ECR-50239	MGR	DDJ
19	4/22/16	JMR	REVISED PER ECR-50799	RHM	SY
20	5/8/17	JMR	REVISED PER ECR-50799H	RHM	SY
18	12/18/085	JTS	REVISED PER ECR-72120	MGR	DAB
17	11/11/15	RHM	REVISED PER ECR-50799B	MGR	THH

FSAR Figure 9.3-16 SH. 1C

SOUTH CAROLINA ELECTRIC & GAS COMPANY

VIRGIL C. SUMMER NUCLEAR STATION

PIPING SYSTEM FLOW DIAGRAM
CHEMICAL AND VOLUME CONTROL

SCE&G A NEXTERA COMPANY

DESIGN ENGINEERING
V.C. SUMMER NUCLEAR STATION JENKINSVILLE, S.C.

MADE	CHECKED	LE APPROVAL
DDJ	MGR	GAL

SCALE: NO SCALE

DRAWING NUMBER: E-302-673 — SHT. NUMBER — REV 20

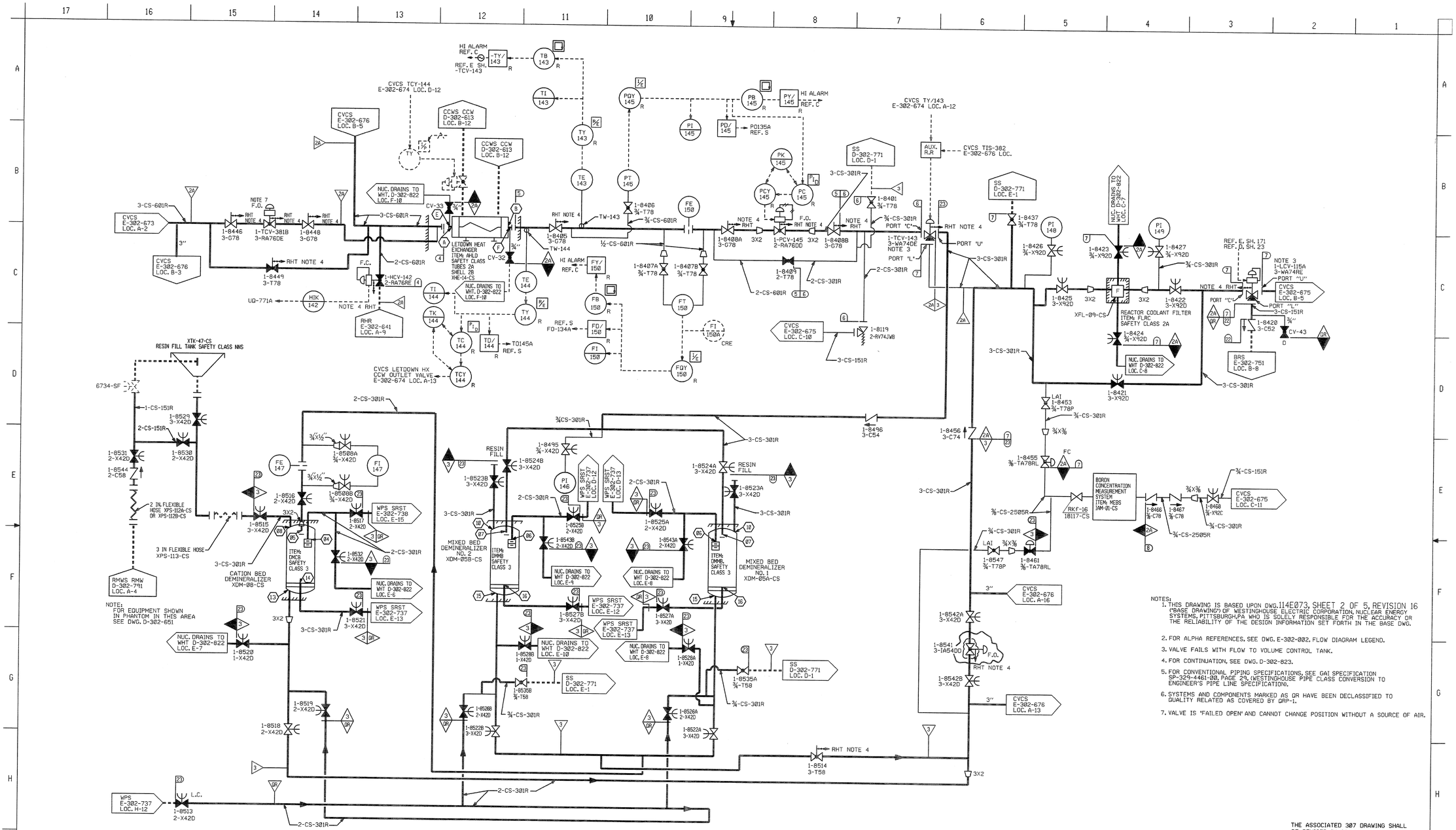

NOTE:
FOR EQUIPMENT SHOWN IN PHANTOM IN THIS AREA SEE DWG. D-302-651

NOTES:

1. THIS DRAWING IS BASED UPON DWG.114E073, SHEET 2 OF 5, REVISION 16 ("BASE DRAWING") OF WESTINGHOUSE ELECTRIC CORPORATION, NUCLEAR ENERGY SYSTEMS, PITTSBURGH,PA WHO IS SOLELY RESPONSIBLE FOR THE ACCURACY OR THE RELIABILITY OF THE DESIGN INFORMATION SET FORTH IN THE BASE DWG.
2. FOR ALPHA REFERENCES, SEE DWG. E-302-002, FLOW DIAGRAM LEGEND.
3. VALVE FAILS WITH FLOW TO VOLUME CONTROL TANK.
4. FOR CONTINUATION, SEE DWG. D-302-823.
5. FOR CONVENTIONAL PIPING SPECIFICATIONS, SEE GAI SPECIFICATION SP-329-4461-00, PAGE 29, (WESTINGHOUSE PIPE CLASS CONVERSION TO ENGINEER'S PIPE LINE SPECIFICATION.
6. SYSTEMS AND COMPONENTS MARKED AS QR HAVE BEEN DECLASSIFIED TO QUALITY RELATED AS COVERED BY QRP-1.
7. VALVE IS 'FAILED OPEN' AND CANNOT CHANGE POSITION WITHOUT A SOURCE OF AIR.

THE ASSOCIATED 307 DRAWING SHALL BE REVISED IN CONJUNCTION WITH REVISION TO THIS 302 IF THE CROSS HATCHED AREA IS AFFECTED.

ESSENTIAL

THIS IS A NUCLEAR SAFETY RELATED DOCUMENT. NO DEVIATION SHALL BE INITIATED OR PERFORMED WITHOUT PRIOR DOCUMENTATION AND WRITTEN APPROVAL

HYDROTEST TEMP. 40°F (MIN.)

23	250	117	300	160	<1%	290	
22	35	115	150	250	<1%	190	
8	105	115	115	250	<1%	145	
7	90	117	300	250	<1%	290	
6	250	117	300	250	<1%	290	
5	356	140	600	382	<1%	750	
4	390	321	600	382	<1%	750	
#	PSIG	°F	PSIG	°F	DURATION	HYDRO	
	NORMAL		UPSET				

DESIGN DATA

1/4"= 1'-0" 0' 5' 10' 15' 20'

NO.	DATE	BY	REVISION	CKD. BY	LE APPROVAL
11	3/16/04	DDJ	REVISED PER ECR-50506	MGR	KL
10	01/29/01	JTS	REVISED PER ECR-50374	MGR	CCB/BCB
9	04/01/99	TGB	REVISED PER ECR-50102	RHM	LRC
8	1/8/98	JMR	REVISED PER CCSS-97-0569	LEK	MGR
13	12/6/05	RHM	REVISED PER ECR-50506D	MGR	BCB
12	05/16/05	JTS	CADD ENHANCED PER ECR-50239	MGR	DDJ

DRAWING LEGIBILITY CLASS 1
SCE&G CAD ENHANCED

FSAR Figure 9.3-16 SH. 2

SOUTH CAROLINA ELECTRIC & GAS COMPANY

VIRGIL C. SUMMER NUCLEAR STATION

PIPING — SYSTEM FLOW DIAGRAM

CHEMICAL AND VOLUME CONTROL

DESIGN ENGINEERING — V. C. SUMMER NUCLEAR STATION JENKINSVILLE, S. C.

MADE: 1. ACI — CHECKED: 2. RHM — LE APPROVAL: 3. ROB

SCALE

E-302-674 — DRAWING NUMBER — SHT. NUMBER — REV 13

302674_0001.m Printed by rm15043 Wednesday December 07 2005 12:59:34 PM EST

NOTES:

1. THIS DRAWING IS BASED UPON DWG. 114E073, SHEET 3 OF 5, REVISION 16 ("BASE DRAWING") OF WESTINGHOUSE ELECTRIC CORPORATION, NUCLEAR ENERGY SYSTEMS, PITTSBURGH, PA WHO IS SOLELY RESPONSIBLE FOR THE ACCURACY OR THE RELIABILITY OF THE DESIGN INFORMATION SET FORTH IN THE BASE DRAWING.
2. FOR ALPHA REFERENCES, SEE DWG. E-302-002, FLOW DIAGRAM LEGEND.
3. FOR CONTINUATION, SEE DWG. D-302-823.
4. FOR CONVENTIONAL PIPING SPECIFICATIONS, SEE QAI SPECIFICATION SP-329-4461-00, PAGE 29. (WESTINGHOUSE PIPE CLASS CONVERSION TO ENGINEER'S PIPE LINE SPECIFICATION.
5. SYSTEMS AND COMPONENTS MARKED AS QR OR QR-G HAVE BEEN DECLASSIFIED TO QUALITY RELATED AS COVERED BY QRP-1.
6. TEMPORARY STRAINER IS PLACED IN SPOOL PIECE DURING INITIAL FLUSHING OPERATIONS. STRAINER MUST BE REMOVED BEFORE PLANT START-UP. STRAINER AND SPOOL PIECE SUPPLIED BY OTHERS. ¾" CAPPED LINE IS CONNECTED TO PRESSURE GAUGE DURING INITIAL FLUSHING.
7. PRIOR HYDRO PRESSURES WERE BASED ON DESIGN FLAG 8 VALUES. HYDRO TESTING IS NOT REQUIRED PER ASME CODE SECTION XI SINCE AN OPEN FLOW PATH EXISTS.
8. CONTROL AIR IS NORMALLY REMOVED
9. PIPING FROM BLENDER TO THE CHARGING PUMP SUCTION HEADER MUST NOT EXCEED 50' IN TOTAL LENGTH.

12. WASTE GAS LINES WHICH HAVE THE POTENTIAL OF CARRYING COMBUSTIBLE CONCENTRATION GAS MIXTURES SHALL BE SEISMICALLY SUPPORTED.
13. THIS VALVE IS EQUIPPED WITH A FAST OPERATOR, HOWEVER, THE STROKE TIME MAY EXTEND BEYOND WESTINGHOUSE EQUIPMENT SPECIFICATION 677473. FOR DETAILS REFER TO FCN CGEO-10684.
14.
15. THIS FLANGE HAS BEEN DRILLED AND TAPPED TO ACCEPT A ¾" COMPRESSION FITTING TO FACILITATE LLRT WORK. THE FITTINGS SHOULD BE CAPPED AT OTHER TIMES.

SYSTEM SUFFIX	FIRST NO.	LAST NO.
CS	18101	18542
TR	17801	17828
CV	CV-1	CV-66

VALVE NUMBERING

29	2890	120	2900	120	0%		
28	220	120	220	120	0%		
27	30	120	30	120	0%		
24	39	117	221	250	0%	0%	NOTE 7
21	45	115	148	220	0%	0%	190
16	15	115	150	200	0%	0%	190
15	40	150	150	200	0%	0%	190
12	2890	130	2900	300	0%	0%	3625
10	2890	130	2900	250	0%	0%	3625
9	115	115	170	300	0%	0%	215
8	185	115	115	250	0%	0%	145
7	90	117	300	250	0%	0%	290
*	PSIG	°F	PSIG	°F	DURATION		HYDRO *
	NORMAL		UPSET				

HYDROTEST TEMP. -40°F (MIN)

DESIGN DATA

* HYDROTEST PRESSURES FOR NEW CONSTRUCTION PER ASME CODE SECTION III

1/4"=1'-0" 0" 5" 10" 15" 20"

ESSENTIAL

RN 14-022

THIS IS A NUCLEAR SAFETY RELATED DOCUMENT. NO DEVIATION SHALL BE INITIATED OR PERFORMED WITHOUT PRIOR DOCUMENTATION AND WRITTEN APPROVAL.

FSAR Figure 9.3-16 SHT. 3

SOUTH CAROLINA ELECTRIC & GAS COMPANY

VIRGIL C. SUMMER NUCLEAR STATION

PREPARED: SYSTEM FLOW DIAGRAM

CHEMICAL AND VOLUME CONTROL

DRAWING LEGIBILITY CLASS 1

A.E. DESIGN ENGINEER	DESIGN ENGINEERING V.C. SUMMER NUCLEAR STATION JENKINSVILLE S.C.	
DATE	DESIGNED	LEAD APPROVAL
DDJ	MGR	GAL

NO.	DATE	BY	REVISION	CKD. BY	APPROVAL
32	5/5/8	RHM	REVISED PER ECR-50780	MGR	SY
31	5/5/8	RHM	REVISED PER ECR-50725	MGR	WW
30	3/29/8	MAR	REVISED PER ECR-51007	MGR	RG
29	8/07/87	LKO	REVISED PER ECR-51007	RHM	HG
34	8/3/8	RHM	REVISED PER ECR-51007	MGR	AF
33	6/9/87	DDJ	REVISED PER ECR50780C	DDJ	DR

CONTRACT NO. 00-00-0000 | LC

E-302-675 | 36

PRINTED BEFORE | SHT. NUMBER | REV

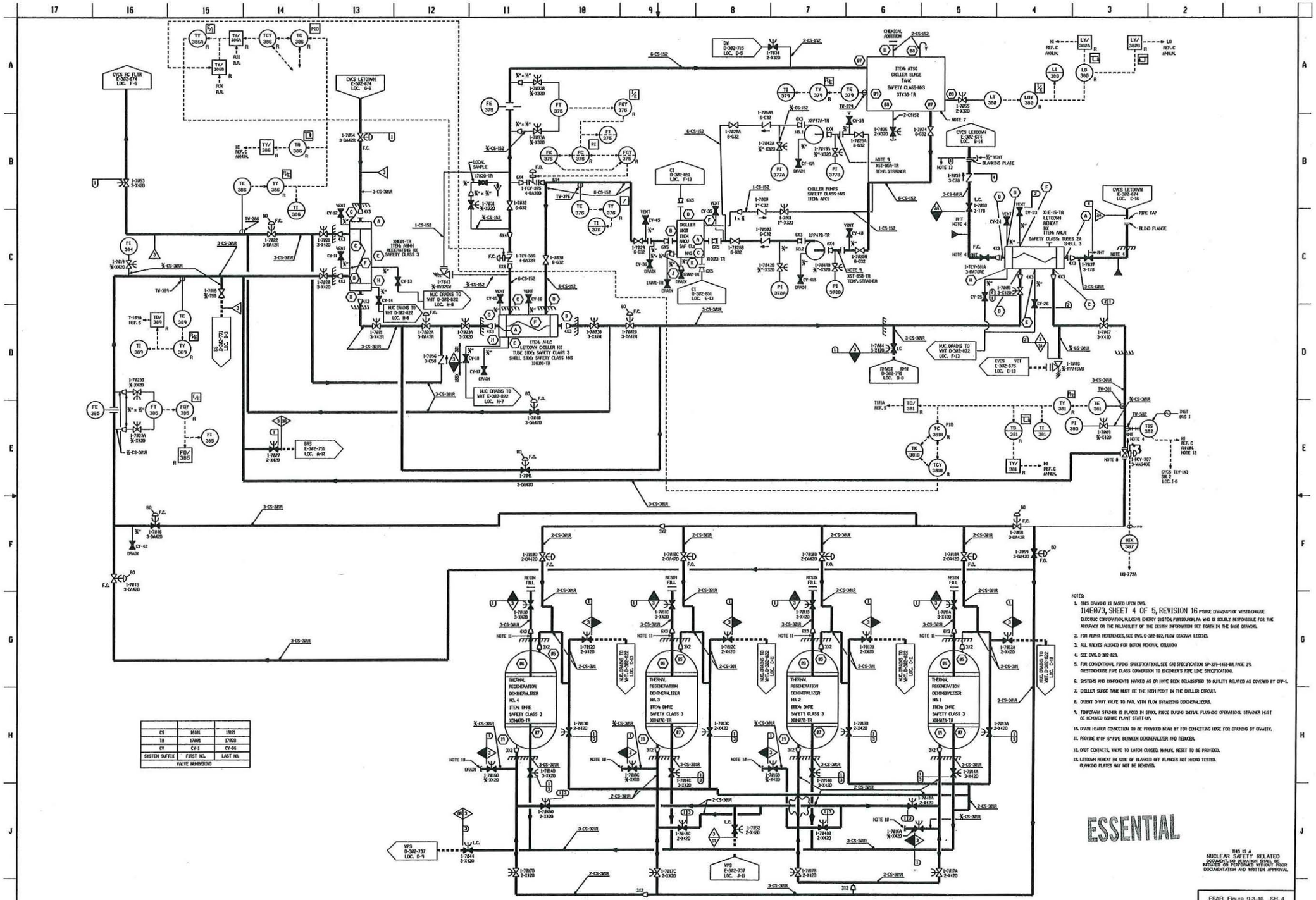

CS	1610L	1612L
TR	1780R	1782R
CV	CV-1	CV-66
SYSTEM SUFFIX	FIRST NO.	LAST NO.
VALVE NUMBERING		

4	398	381	600	382	< 1%	750	750
3	28	140	150	140	< 1%	190	22
2	298	140	300	380	< 1%	375	338
1	298	140	300	160	< 1%	290	275
	PSIG	°F	PSIG	°F	DURATION	DESIGN HYDRO	ISI HYDRO
	NORMAL		UPSET				

HYDROTEST TEMP. 48°F (MIN)

DESIGN DATA

NOTES:

1. THIS DRAWING IS BASED UPON DWG. 114E073, SHEET 4 OF 5, REVISION 16 (PAGE DRAWING) OF WESTINGHOUSE ELECTRIC CORPORATION, NUCLEAR ENERGY SYSTEM, PITTSBURGH, PA AND IS SOLELY RESPONSIBLE FOR THE ACCURACY OR THE RELIABILITY OF THE DESIGN INFORMATION SET FORTH IN THE BASE DRAWING.
2. FOR ALPHA REFERENCES, SEE DWG. E-302-802, FLOW DIAGRAM LEGEND.
3. ALL VALVES ALIGNED FOR BORON REMOVAL (DEMINS)
4. SEE DWG. D-302-823.
5. FOR CONVENTIONAL PIPING SPECIFICATIONS, SEE GAI SPECIFICATION SP-329-1401-00, PAGE 2%. WESTINGHOUSE PIPE CLASS CONVERSION TO ENGINEER'S PIPE LINE SPECIFICATION.
6. SYSTEMS AND COMPONENTS MARKED AS OR HAVE BEEN DECLASSIFIED TO QUALITY RELATED AS COVERED BY QTP-1.
7. CHILLER SURGE TANK MUST BE THE HIGH POINT IN THE CHILLER CIRCUIT.
8. ORIENT 3-WAY VALVE TO FAIL WITH FLOW BYPASSING DEMINERALIZERS.
9. TEMPORARY STRAINER IS PLACED IN SPOOL PIECE DURING INITIAL FLUSHING OPERATIONS. STRAINER MUST BE REMOVED BEFORE PLANT START-UP.
10. DRAIN HEADER CONNECTION TO BE PROVIDED NEAR BY FOR CONNECTING HOSE FOR DRAINING BY GRAVITY.
11. PROVIDE 6"FF 6" PIPE BETWEEN DEMINERALIZER AND REDUCER.
12. DPDT CONTACTS, VALVE TO LATCH CLOSED, MANUAL RESET TO BE PROVIDED.
13. LETDOWN REHEAT HX SIDE OF BLANKED OFF FLANGES NOT HYDRO TESTED. BLANKING PLATES MAY NOT BE REMOVED.

THIS IS A NUCLEAR SAFETY RELATED DOCUMENT. NO DEVIATION SHALL BE INITIATED OR PERFORMED WITHOUT PRIOR DOCUMENTATION AND WRITTEN APPROVAL.

DRAWING LEGIBILITY CLASS 1
SCE&G CAD ENHANCED

NO.	DATE	BY	REVISION	DES. BY	DR.	CHK. BY	APPROVAL
11	3/5/91	JMR	REVISED PER EDR-70502	MGR	GK		
10	3/8/90	DDJ	REVISED PER EDR-50506	MGR	TL		
9	8/1/0	JTS	REVISED PER EDR-72275	RWM/GRAR			
11	3/5/91	JTS	CADD ENHANCED PER EDR-50339	LEK	MGR		
13	3/5/0	RHM	REVISED PER EDR-70783	MGR	RHM		
12	6/5/0	RHM	REVISED PER EDR-505060	MGR	BCG		

FSAR Figure 9.3-16 SH. 4

SOUTH CAROLINA ELECTRIC & GAS COMPANY
VIRGIL C. SUMMER NUCLEAR STATION
PIPING SYSTEM FLOW DIAGRAM
CHEMICAL AND VOLUME CONTROL

DESIGN ENGINEERING
S.C. SUMMER NUCLEAR STATION JENKINSVILLE, S.C.

DRAWN	DESIGN	SE REVIEW
ACI	MGR	JMG

E-302-676 | 15

1/4" = 1'-0"

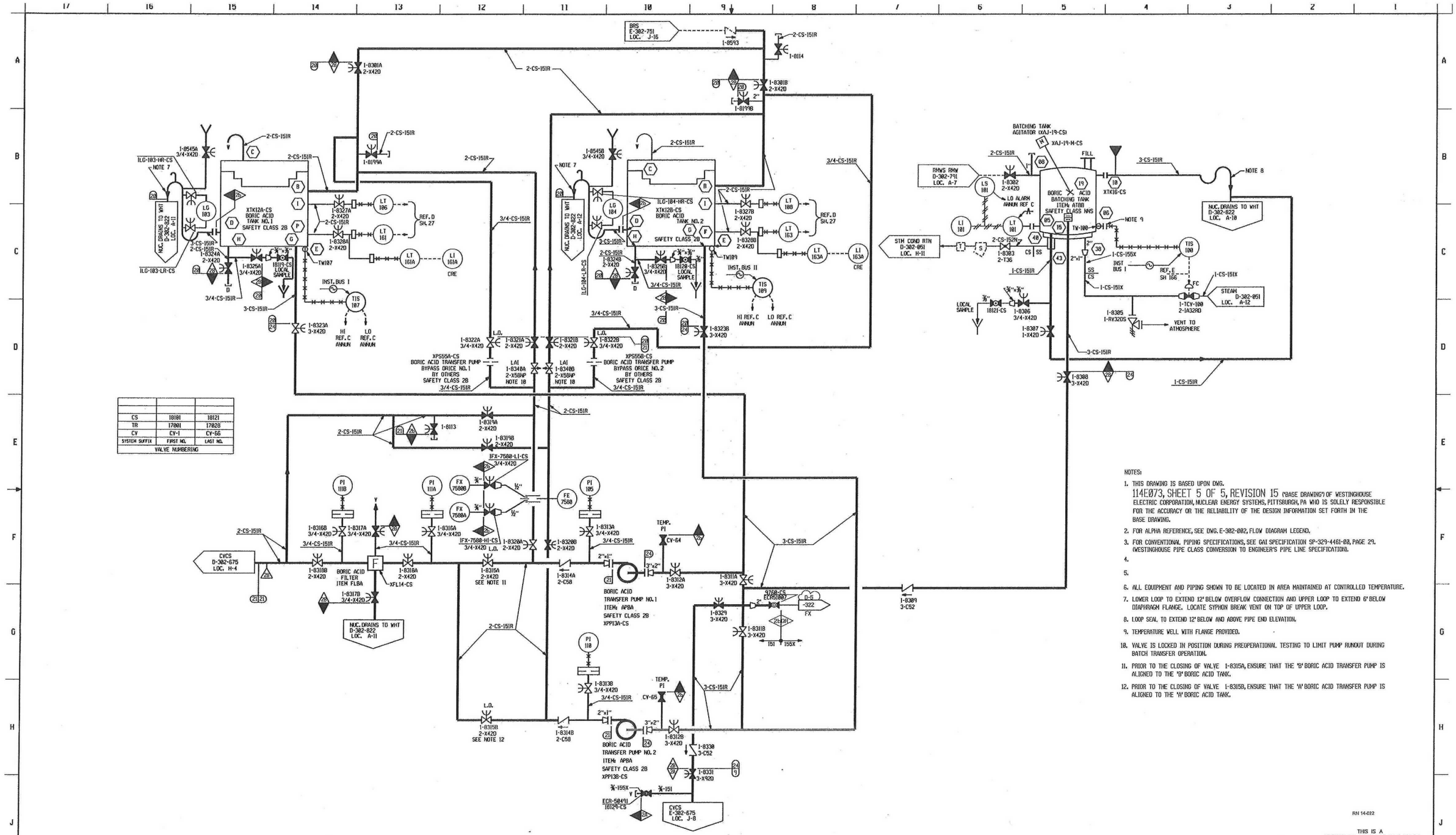

CS	18101	18121
TR	17001	17028
CV	CV-1	CV-66
SYSTEM SUFFIX	FIRST NO.	LAST NO.
VALVE NUMBERING		

HYDROTEST TEMP. 40°F (MIN.)

24	45	115	158	220	0%	190
21	45	115	148	220	0%	190
20	ATM.	75	ATM.	220	0%	20
9	15	115	178	300	0%	2.15
(B)	PSIG	°F	PSIG	°F	DURATION	HYDRO
NORMAL			UPSET			
DESIGN DATA						

1/4" = 1'-0"

NOTES:

1. THIS DRAWING IS BASED UPON DWG. 114E073, SHEET 5 OF 5, REVISION 15 ("BASE DRAWING") OF WESTINGHOUSE ELECTRIC CORPORATION, NUCLEAR ENERGY SYSTEMS, PITTSBURGH, PA WHO IS SOLELY RESPONSIBLE FOR THE ACCURACY OR THE RELIABILITY OF THE DESIGN INFORMATION SET FORTH IN THE BASE DRAWING.
2. FOR ALPHA REFERENCE, SEE DWG. E-302-002, FLOW DIAGRAM LEGEND.
3. FOR CONVENTIONAL PIPING SPECIFICATIONS, SEE GAI SPECIFICATION SP-329-4461-00, PAGE 29. (WESTINGHOUSE PIPE CLASS CONVERSION TO ENGINEER'S PIPE LINE SPECIFICATION).
4.
5.
6. ALL EQUIPMENT AND PIPING SHOWN TO BE LOCATED IN AREA MAINTAINED AT CONTROLLED TEMPERATURE.
7. LOWER LOOP TO EXTEND 12" BELOW OVERFLOW CONNECTION AND UPPER LOOP TO EXTEND 6" BELOW DIAPHRAGM FLANGE. LOCATE SYPHON BREAK VENT ON TOP OF UPPER LOOP.
8. LOOP SEAL TO EXTEND 12" BELOW AND ABOVE PIPE END ELEVATION.
9. TEMPERATURE WELL WILL WITH FLANGE PROVIDED.
10. VALVE IS LOCKED IN POSITION DURING PREOPERATIONAL TESTING TO LIMIT PUMP RUNOUT DURING BATCH TRANSFER OPERATION.
11. PRIOR TO THE CLOSING OF VALVE 1-8315A, ENSURE THAT THE 'B' BORIC ACID TRANSFER PUMP IS ALIGNED TO THE 'B' BORIC ACID TANK.
12. PRIOR TO THE CLOSING OF VALVE 1-8315B, ENSURE THAT THE 'A' BORIC ACID TRANSFER PUMP IS ALIGNED TO THE 'A' BORIC ACID TANK.

RN 14-022

THIS IS A
NUCLEAR SAFETY RELATED
DOCUMENT. NO DEVIATION SHALL BE INITIATED OR PERFORMED WITHOUT PRIOR DOCUMENTATION AND WRITTEN APPROVAL

ESSENTIAL

DRAWING LEGIBILITY
CLASS 1
SCE&G CAD ENHANCED

NO.	DATE	BY	REVISION	CKD. BY	APPROVED
12	12/4/12	RLBH	REVISED PER ECR-71589	MGR	RHM
11	10/17/08	JTS	CADD ENHANCED PER ECR-68239	MGR	DDJ
10	10/30/03	RHM	REVISED PER ECR-50491	RHM	AMC
15	3/29/96	JMR	REVISED PER ECR-51087	RHM	NG
14	12/01/01	KG	REVISED PER ECR-51087	MGR	AF
13	6/2/98	RHM	REVISED PER ECR-51087	MGR	AF

FSAR Fig. 9.3-16 SH. 5

SOUTH CAROLINA ELECTRIC & GAS COMPANY
VIRGIL C. SUMMER NUCLEAR STATION

PIPING — SYSTEM FLOW DIAGRAM
CHEMICAL AND VOLUME CONTROL

DESIGN ENGINEERING
A SUBSIDIARY OF SCANA CORPORATION — V. C. SUMMER NUCLEAR STATION JENKINSVILLE, S. C.

DRAWN BY	DESIGNED BY	CHECKED BY	APPROVED BY
SRM	RHM	RLJ	

E-302-677 — 15
DRAWING NUMBER — REV. NUMBER — REV. NUMBER

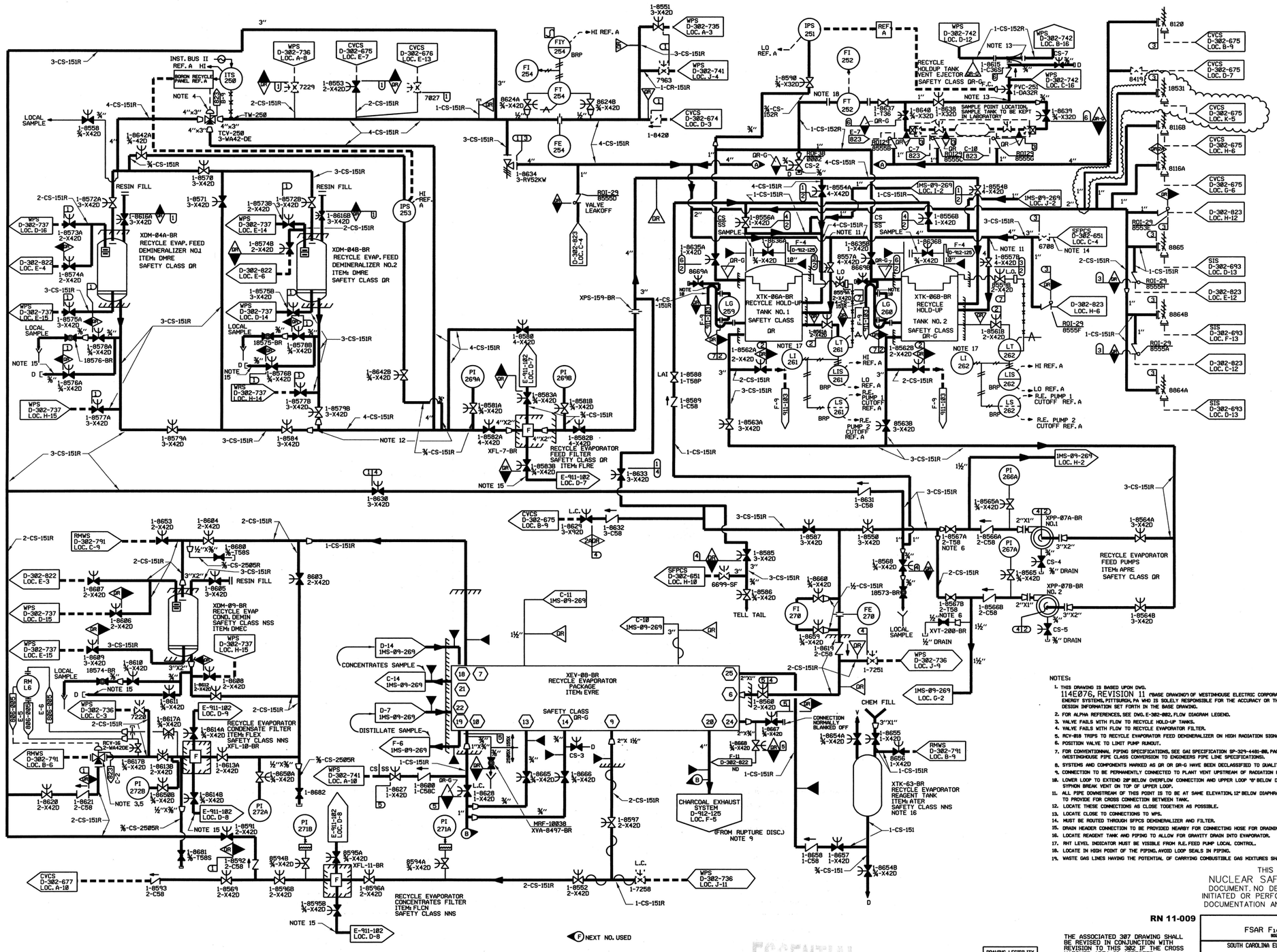

NOTES:

1. THIS DRAWING IS BASED UPON DWG. 114E076, REVISION 11 (BASE DRAWING) OF WESTINHOUSE ELECTRIC CORPORATION, NUCLEAR ENERGY SYSTEMS, PITTSBURGH, PA WHO IS SOLELY RESPONSIBLE FOR THE ACCURACY OR THE RELIABILITY OF THE DESIGN INFORMATION SET FORTH IN THE BASE DRAWING.
2. FOR ALPHA REFERENCES, SEE DWG. E-302-002, FLOW DIAGRAM LEGEND.
3. VALVE FAILS WITH FLOW TO RECYCLE HOLD-UP TANKS.
4. VALVE FAILS WITH FLOW TO RECYCLE EVAPORATOR FILTER.
5. RCV-010 TRIPS TO RECYCLE EVAPORATOR FEED DEMINERALIZER ON HIGH RADIATION SIGNAL.
6. POSITION VALVE TO LIMIT PUMP RUNOUT.
7. FOR CONVENTIONAL PIPING SPECIFICATIONS, SEE GAI SPECIFICATION SP-329-4481-00, PAGE 2%. (WESTINGHOUSE PIPE CLASS CONVERSION TO ENGINEERS PIPE LINE SPECIFICATIONS).
8. SYSTEMS AND COMPONENTS MARKED AS QR OR QR-G HAVE BEEN DECLASSIFIED TO QUALITY RELATED AS COVERED BY DRP-1.
9. CONNECTION TO BE PERMANENTLY CONNECTED TO PLANT VENT UPSTREAM OF RADIATION MONITOR RT-814.
10. LOWER LOOP TO EXTEND 28" BELOW OVERFLOW CONNECTION AND UPPER LOOP "B" BELOW DIAPHRAGM FLANGE. LOCATE SYPHON BREAK VENT ON TOP OF UPPER LOOP.
11. ALL PIPE DOWNSTREAM OF THIS POINT IS TO BE AT SAME ELEVATION, 12" BELOW DIAPHRAGM FLANGE. TO PROVIDE FOR CROSS CONNECTION BETWEEN TANK.
12. LOCATE THESE CONNECTIONS AS CLOSE TOGETHER AS POSSIBLE.
13. LOCATE CLOSE TO CONNECTIONS TO WPS.
14. MUST BE ROUTED THROUGH SFPCS DEMINERALIZER AND FILTER.
15. DRAIN HEADER CONNECTION TO BE PROVIDED NEARBY FOR CONNECTING HOSE FOR DRAINING BY GRAVITY.
16. LOCATE REAGENT TANK AND PIPING TO ALLOW FOR GRAVITY DRAIN INTO EVAPORATOR.
17. RHT LEVEL INDICATOR MUST BE VISIBLE FROM R.E. FEED PUMP LOCAL CONTROL.
18. LOCATE IN HIGH POINT OF THE PIPING. AVOID LOOP SEALS IN PIPING.
19. WASTE GAS LINES HAVING THE POTENTIAL OF CARRYING COMBUSTIBLE GAS MIXTURES SHALL BE SEISMICALLY SUPPORTED.

THIS IS A
NUCLEAR SAFETY RELATED
DOCUMENT. NO DEVIATION SHALL BE
INITIATED OR PERFORMED WITHOUT PRIOR
DOCUMENTATION AND WRITTEN APPROVAL

RN 11-009

THE ASSOCIATED 307 DRAWING SHALL BE REVISED IN CONJUNCTION WITH REVISION TO THIS 302 IF THE CROSS HATCHED AREA IS AFFECTED.

DRAWING LEGIBILITY CLASS I
(SCANS CAD ENHANCED)

ESSENTIAL

PENDING/HOLD CHG
Use with reference to
ECR: 50493
DATE: 10/16/2009
INITIALS: CVT

#	PSIG	°F	PSIG	°F	PSIG	°F
	NORMAL		UPSET		HYDROTEST	
7	ATM.	150	ATM.	150	ATM.	350(MIN.)
6	-0.4	185	5	185	8	350(MIN.)
5	0.5	140	13	200	17	350(MIN.)
4	140	150	150	150	188	350(MIN.)
3	15	150	150	150	188	350(MIN.)
2	15	150	15	150	•	350(MIN.)
1	60	150	150	150	188	350(MIN.)

DESIGN DATA

BR	18573	18576
CS	CS-1	CS-7
SYSTEM SUFFIX	FIRST NO.	LAST NO.

VALVE NUMBERING

• STANDING WATER HYDROTEST

NO.	DATE	BY	REVISION	CKD. BY	LE APPROVAL
16	12/15/97	AVN	REVISED PER CGSS-97-0609	MGR	LEK
15	11/17/97	AVN	REVISED PER CGSS-97-0579	LEK	MGR
14	6/17/96	DDJ	REVISED PER CGSS-96-0095	MGR	GAR
13	10/28/94	JTS	REVISED PER CGSS-94-1353	MGR	WHB
18	5/8/11	JMR	REVISED PER ECR-50780	MGR	SY
17	1/25/05	JMR	CADD ENHANCED PER ECR-50239	MGR	DDJ

FSAR Figure 9.3-18
SOUTH CAROLINA ELECTRIC & GAS COMPANY

SOUTH CAROLINA ELECTRIC & GAS COMPANY

VIRGIL C. SUMMER NUCLEAR STATION

PIPING SYSTEM FLOW DIAGRAM
BORON RECYCLE

DESIGN ENGINEERING
A SCANA COMPANY — V. C. SUMMER NUCLEAR STATION JENKINSVILLE, S. C.

MADE	CHECKED	LE APPROVAL
1. JTS	2. MGR	3. WHB

SCALE: NO SCALE

E-302-751 — DRAWING NUMBER — SHT. NUMBER — REV 18

SYSTEM DATA					
#	GPM	PSIG	°F	BY	REMARKS
1	05	600	80	DTK	NORMAL
2	05	2235	80	DTK	NORMAL
3	05	2235	80	DTK	NORMAL
4	10	2235	80	DTK	NORMAL
5	12	2235	80	DTK	POST ACCIDENT
6	15	600	80	DTK	FLUSH
7	15	500	80	DTK	-
8	10	110	80	DTK	FLUSH & DILUTION
9	24	39	50	JDM	
10	24	39	60	JDM	

SAFETY CLASS VERIFICATION	
ORIGINATED BY	14 JAN '81
REVIEWED BY	15 JAN '81

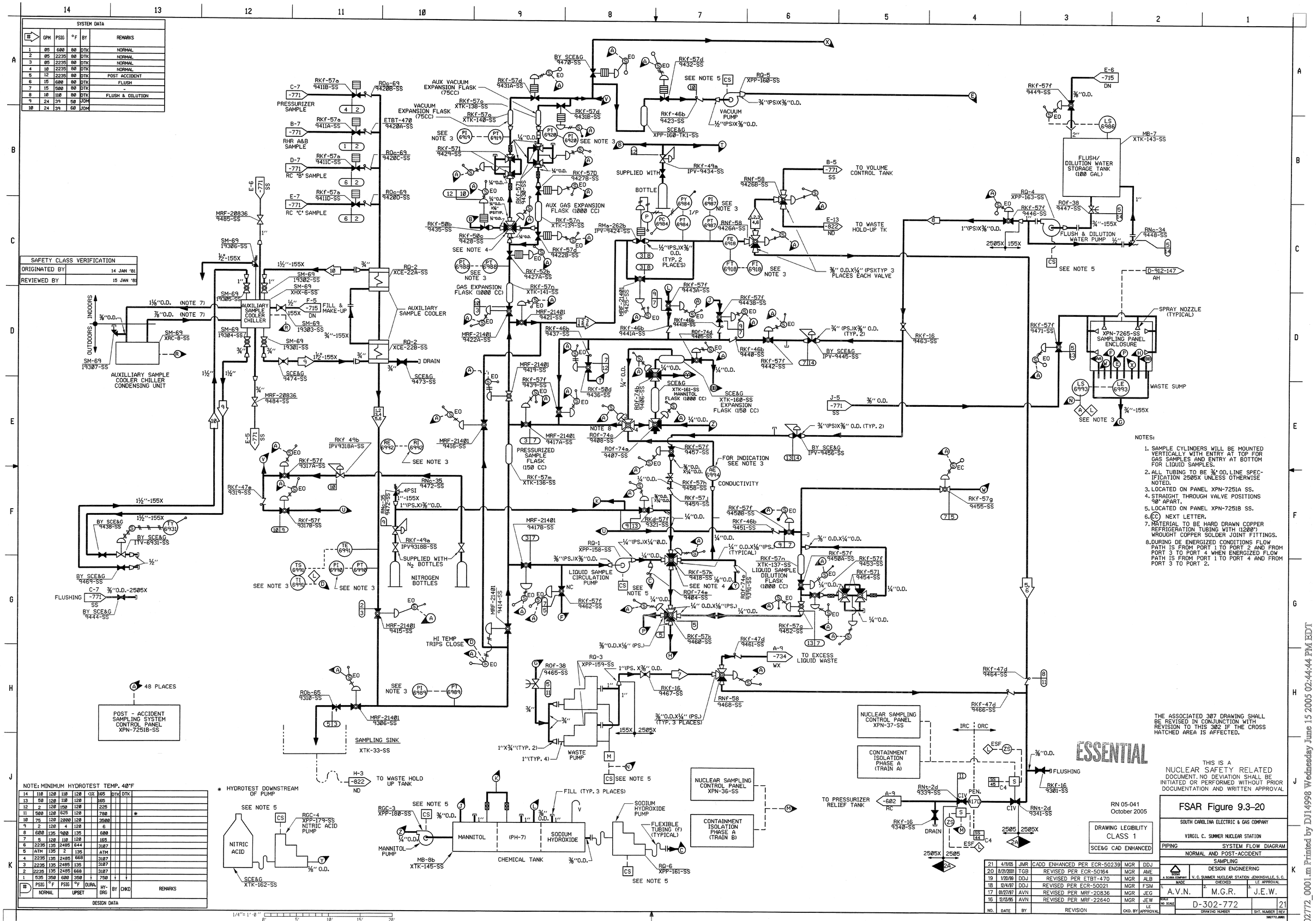

NOTE: MINIMUM HYDROTEST TEMP. 40°F

#	PSIG	°F	PSIG	°F	DURA.	HY-DRO	BY	CHKD	REMARKS
	NORMAL		UPSET						
14	110	120	110	120	<1X	165	DTK	DTK	
13	50	120	110	120		165			
12	2	120	150	120		225			
11	500	120	625	120		780			*
10	75	120	2000	120		3500			
9	2	120	4	120		6			
8	600	135	900	135		600			
7	5	120	110	120		165			
6	2235	135	2485	644		3107			
5	ATM	135	2	135		ATM			
4	2235	135	2485	668		3107			
3	2235	135	2485	135		3107			
2	2235	135	2485	668		3107			
1	535	350	600	350		750			

DESIGN DATA

NOTES:

1. SAMPLE CYLINDERS WILL BE MOUNTED VERTICALLY WITH ENTRY AT TOP FOR GAS SAMPLES AND ENTRY AT BOTTOM FOR LIQUID SAMPLES.
2. ALL TUBING TO BE ⅜" OD, LINE SPECIFICATION 2505X UNLESS OTHERWISE NOTED.
3. LOCATED ON PANEL XPN-7251A SS.
4. STRAIGHT THROUGH VALVE POSITIONS 90° APART.
5. LOCATED ON PANEL XPN-7251B SS.
6. (CC) NEXT LETTER.
7. MATERIAL TO BE HARD DRAWN COPPER REFRIGERATION TUBING WITH (1200°) WROUGHT COPPER SOLDER JOINT FITTINGS.
8. DURING DE ENERGIZED CONDITIONS FLOW PATH IS FROM PORT 1 TO PORT 2 AND FROM PORT 3 TO PORT 4 WHEN ENERGIZED FLOW PATH IS FROM PORT 1 TO PORT 4 AND FROM PORT 3 TO PORT 2.

THE ASSOCIATED 307 DRAWING SHALL BE REVISED IN CONJUNCTION WITH REVISION TO THIS 302 IF THE CROSS HATCHED AREA IS AFFECTED.

ESSENTIAL

THIS IS A NUCLEAR SAFETY RELATED DOCUMENT. NO DEVIATION SHALL BE INITIATED OR PERFORMED WITHOUT PRIOR DOCUMENTATION AND WRITTEN APPROVAL

RN 05-041
October 2005

DRAWING LEGIBILITY CLASS 1
SCE&G CAD ENHANCED

NO.	DATE	BY	REVISION	CKD. BY	LE APPROVAL
21	4/11/05	JMR	CADD ENHANCED PER ECR-50239	MGR	DDJ
20	8/21/2001	TGB	REVISED PER ECR-50164	MGR	AWE
19	1/20/99	DDJ	REVISED PER ETBT-470	MGR	ALB
18	12/4/97	DDJ	REVISED PER ECR-50021	MGR	FSM
17	01/27/97	AVN	REVISED PER MRF-20836	MGR	JEG
16	12/13/95	AVN	REVISED PER MRF-22640	MGR	JEW

FSAR Figure 9.3-20

SOUTH CAROLINA ELECTRIC & GELECTRIC & GAS COMPANY

VIRGIL C. SUMMER NUCLEAR STATION

PIPING — SYSTEM FLOW DIAGRAM

NORMAL AND POST-ACCIDENT SAMPLING

SCE&G A SCANA COMPANY — DESIGN ENGINEERING — V. C. SUMMER NUCLEAR STATION JENKINSVILLE, S. C.

MADE: A.V.N. — CHECKED: M.G.R. — LE APPROVAL: J.E.W.

SCALE NO SCALE — DRAWING NUMBER D-302-772 — SHT. NUMBER 1 — REV 21

302772-0001

302772_0001.rn Printed by DJ14998 Wednesday June 15 2005 02:44:44 PM EDT

9.4 AIR CONDITIONING, HEATING, COOLING, AND VENTILATION SYSTEMS

9.4.1 CONTROL BUILDING AREA VENTILATION SYSTEM

Air conditioning, heating, cooling and ventilating systems are provided for the control room and other Control Building areas to satisfy the following general requirements:

1. To maintain ambient air temperatures in all areas as required for the comfort and safety of personnel.

2. To satisfy environmental requirements of equipment.

3. To meet the radiation control requirements of 10 CFR 20.

4. To satisfy the design requirements of General Design Criterion 19, relative to the control room.

9.4.1.1 Design Basis

The systems for the Control Building areas are designed in accordance with the following:

1. The general requirements indicated in Section 9.4.1 are satisfied.

2. Equipment, motors and controls in Safety Class 2b systems are supplied from Class 1E power sources and are separated and redundant to meet the single failure criteria. RN 10-014

3. Instrumentation and control is provided to detect abnormal conditions, such as smoke, high temperature or high radiation levels which require operation in a recirculation mode, emergency filtration mode or outside air purging mode.

4. Operation, monitoring and control of these systems, except for the NNS cooling for office space, in the control room is provided. 99-01

9.4.1.2 System Description

The system diagrams for the various Control Building area systems are provided by the following figures:

1. Figure 9.4-1, Control Room System.

2. Figure 9.4-2, Relay Room System and Computer Room System.

3. Figure 9.4-3, Controlled Access Area Supply System and Miscellaneous Room Systems.

4. Figure 9.4-4, Controlled Access Area Exhaust System.

5. Figure 9.4-5, Computer Rooms and SAS Room Cooling System. 99-01

Design and performance data are indicated on these figures.

9.4.1.2.1 Control Room System

The main components of this system include:

1. Two (2) 100% capacity air handling units, each with roughing filters (80% efficiency on National Bureau of Standards (NBS) dust), chilled water cooling coil, face and bypass damper section and fan section.

2. Electric reheat coils in the supply ducts.

3. Redundant supply, return, relief and outside air ducts, including necessary fire dampers.

4. Two (2) 100% capacity emergency filter systems, each with filter plenum fan, filter train consisting of roughing filters (80% efficiency on NBS dust), HEPA filters (99.97% efficiency on 0.3 micron particles), charcoal filters (95% efficiency on methyl iodide at 70% relative humidity, 77°F) and final HEPA filters (same efficiency as previous HEPA filter). Each filter plenum also includes a water deluge system. 00-01

   The control room emergency filter plenums have been nominally sized for a capacity of 20,000 cfm (21,270 cfm as built) each. The individual filter banks of each plenum have been sized as follows: 00-01

   a. Roughing filters: 15 units at 2000 cfm each. Total capacity 30,000 cfm.

   b. HEPA filters: 15 units at 1500 cfm each. Total capacity 22,500 cfm.

   c. Charcoal filters: 11 vertical beds at 2000 cfm each. Total capacity 22,000 cfm.

5. Air operated, spring opposed dampers to isolate the emergency filter systems when not in use; in the face and bypass damper sections of the air handling units; and in the relief air ducts. Air operated butterfly valves with the safety related air accumulators are located in outside air ducts.

6. Instrumentation and control devices to perform the following functions:

   a. Measure pressure drop across normal and emergency filter banks (local indication only).

b. Cause an alarm in the control room upon detection of high concentration of smoke in the air handling unit return duct or in the emergency filter return duct.

c. Cause an alarm in the control room upon detection of high temperature in the discharge duct or in the emergency filter charcoal bed.

d. Indicate, in the control room, the air flow rate in the outside air duct.

e. Indicate, in the control room, the position of the outside air valves, relief dampers and the emergency filter system isolation dampers.

f. Provide means for automatically placing the system in the emergency mode and starting the emergency filter system upon receipt of safety injection or high radiation signal from the gaseous activity channel of RM-A1. Provide means to automatically start the normal air handling units and emergency filter fans following loss of offsite power.

g. Provide means, in the control room, for manually initiating system damper positioning for the emergency modes of operation and starting the emergency filter system.

h. Provide means, in the control room, for manually overriding the emergency mode of system operation and to indicate, in the control room, that system override is in effect.

i. Maintain positive control room pressure by adjusting outside air valves. Control room pressure in excess of system setpoints causes an alarm in the control room.

j. Automatically maintain control room temperature by modulating face and bypass damper position and an electric reheat coil in the supply duct.

k. Automatically maintain control room humidity by controlling a humidifier.

l. Indicate, in the control room, air handling unit or emergency filter fan operation.

The system continuously supplies filtered, cooled or heated air to the control room, the technical support center and the cable spreading area under the control room, during normal conditions. Filtered and cooled air is provided during post accident and loss of offsite power conditions. By operation of either one of the two supply air trains, and control of the proper dampers and valves, the system admits small amounts of outside make-up air to the control room to maintain positive pressure during normal and emergency operation, or admits 100% outside air during purge mode. The system maintains space temperature by automatically varying the volume of air passing through the cooling coil and by energizing circuits in the electric reheat coil. The cooling coil is supplied with chilled water from the safety class Chilled Water System (see Section 9.4.7.2.4). 00-01

Upon receipt of a safety injection or high radiation signal from the gaseous activity channel of RM-A1, the system automatically places the dampers in the emergency mode and starts the normal air handling unit and emergency filter fan. A loss of offsite power causes the air handling units and emergency filter fans to start automatically. In the event of loss of offsite power, the system can be manually reset for normal operation. Operation of the emergency filter fans passes control room return air through the emergency filter system. Normal operation of the system is accomplished using manual switches in the control room.

The mechanical components, control devices and supply and return ductwork are redundant and separated to ensure system availability. Each system component requiring electrical power is supplied from the Class 1E electrical system. Both systems are supplied with required instrument air from the non-nuclear safety class instrument air system. Since instrument air is not safety-related, system design is such that failure of instrument air will not inhibit system operation in the safety related mode.

During normal operation control room air is recirculated through the control room toilets and kitchen, via an exhaust fan and carbon filter, and is discharged into the return ductwork.

9.4.1.2.2 Relay Room System

The main components of this system include:

1. Two (2) 100% capacity air handling units, each with roughing filters (80% efficiency on NBS dust), face and bypass section, chilled water cooling coil and fan section.

2. Electric reheat coils in the supply duct.

3. Redundant supply, return, relief and outside air ducts.

4. Air operated, spring opposed dampers in the face and bypass damper sections of the air handling units and in the return and relief air ducts.

5. Instrumentation and control devices in each system to perform the following functions:

   a. Measure the pressure drop across the air handling unit filter bank (local indication only).

   b. Cause an alarm in the control room upon detection of high air temperature in the discharge duct and upon detection of high or low temperature in the relay room.

   c. Indicate, in the control room, damper position for the outside air dampers and relief air dampers.

   d. Provide means for automatically placing the system in the emergency recirculation mode (close outside air and relief dampers and open return dampers) and starting the air handling units upon receipt of a safety injection signal or high radiation signal from the gaseous activity channel of RM-A1. Loss of offsite power starts the air handling units but does not cause dampers to be positioned for operation in the recirculation mode.

   e. Provide means for manually initiating system damper positioning for the emergency recirculation mode of operation.

   f. Provide means for manual control of outside, return, and relief damper position.

   g. Automatically maintain relay room temperature by modulating face and bypass damper position and an electric reheat coil in the supply duct.

   h. Indicate, in the control room, air handling unit operation.

The system continuously supplies filtered, cooled, or heated air to the relay room under normal conditions. Filtered and cooled air is provided under post accident and loss of offsite power conditions. By operation of either 1 of the 2 supply air trains and by automatic control of the proper dampers, the system admits fixed amounts of outside ventilation air, no outside air (i.e., recirculation mode), or 100% outside air (i.e., purge mode). The system maintains space temperature by automatically varying the volume of air passing through the cooling coil and by energizing circuits in the electric reheat coil. The cooling coil is supplied by the safety class Chilled Water System (see Section 9.4.7.2.4). Upon receipt of a safety injection or high radiation signal from the gaseous activity channel of RM-A1, the system automatically positions the outside air dampers for the recirculation mode. Receipt of an ESFLS signal starts the fans in both air handling units. The units are normally operated from the control room. Mechanical components, controls, duct system redundancy, separation, power supply, and equipment location are the same as for the control room system, discussed in Section 9.4.1.2.1. 00-01

9.4.1.2.3 Computer Room System

The main components of this system include:

1. Two (2) 100% capacity air handling units, each with roughing filters (80% efficiency on NBS dust), face and bypass section, chilled water cooling coil and fan section. Chilled water is provided by the Non-nuclear Safety Related Chilled Water System. See 9.4.7.2.12.

2. Electric reheat coils in the supply duct.

3. Redundant supply, return, relief, and outside air ducts.

4. Air operated, spring opposed dampers in the face and bypass damper sections of the air handling units and in the outside, return, and relief air ducts.

5. Instrumentation and control devices to perform the following functions:

    a. Measure the pressure drop across the air handling unit filter bank (local indication only).

    b. Cause an alarm in the control room upon detection of high air temperature in the discharge duct and upon detection of high or low temperature in the computer room.

    c. Indicate, in the control room, damper position for the outside air dampers and relief air dampers.

    d. Provide means for manually initiating system damper positioning for recirculation mode of operation.

    e. Provide means for manual control of outside, return, and relief damper position.

    f. Automatically maintain computer room temperature by modulating face and bypass damper position, and an electric reheat coil in the supply duct.

    g. Indicate, in the control room, air handling unit operation.

    h. Provide means for automatically placing system dampers in the emergency recirculation mode positions (close outside air and relief dampers) upon receipt of a safety injection signal or high radiation signal from the gaseous activity channel of RM-A1.

    i. Automatically maintain constant computer room relative humidity by controlling a humidifier.

The system continuously supplies filtered, cooled, or heated air to the computer room under normal and post accident conditions if offsite power is available. By operation of either 1 of the 2 supply air trains and by automatic control of the proper dampers, the system admits fixed amounts of outside ventilation air, no outside air (i.e., recirculation mode), or admits 100% outside air (i.e., purge mode). The system maintains space temperature by automatically varying the volume of air passing through the cooling coils and by energizing circuits in the electric reheat coil. The cooling coil is supplied by the non-nuclear safety related Chilled Water System. Upon receipt of a safety injection or high radiation signal, the system dampers are automatically placed in the recirculation mode position, and the system continues to operate if normal power is available. Upon receipt of an ESF signal, the system dampers are automatically placed in the recirculation mode position with the fan motors blocked from operation until manually reset. The units are connected to Class 1E power buses. The units are normally operated from the control room. 00-01

9.4.1.2.4 Controlled Access Area Supply System

The main components of this system include:

1. A 100% capacity air handling unit including roughing filters (80% efficiency on NBS dust), electric preheating coil, fan section, coil section with chilled water coil and electric heating coil, and a hot and cold deck zoning damper section. Chilled water is provided by the Non-nuclear Safety Related Chilled Water System. See 9.4.7.2.12.

2. A 100% capacity sample room and radiochemical laboratory hood supply fan.

3. Outside air, zone supply and hood supply ducts.

4. Air operated, spring opposed dampers to isolate the controlled access air handling unit and laboratory hood supply fan when not in use; in the air handling unit zoning damper section; and in the outside air intake duct.

5. Fire dampers in the zone supply ducts.

6. Instrumentation and control devices in each system to perform the following functions:

    a. Measure the pressure drop across the filter bank (local indication only).

    b. Cause an alarm in the control room upon detection of high temperature in the hood fan discharge duct or in the air handling unit supply duct to Zone II.

    c. Cause an alarm in the control room upon detection of high concentration of smoke in the laboratory hood supply fan discharge, or in the air handling unit supply duct to Zone II.

d. Indicate, in the control room, the operating status of the laboratory hood supply fan and position of the isolation dampers.

e. Interlock the position of the dampers with supply fan operation.

f. Provide permissive interlocks so that controlled access air handling unit and the laboratory hood supply fan cannot operate unless control access filter exhaust fans are operating.

g. Provide interlocks so that the outside air isolation dampers close on receipt of safety injection signal. 00-01

h. Automatically maintain space temperature in each of four zones by modulating zoning dampers in the hot and cold decks of the air handling unit and by controlling the electric heating coil in the hot deck.

i. Automatically maintain space temperature downstream of the preheat coil by energizing circuits of this coil as required by the temperature controller.

j. Indicate, in the control room, the operating status of the air handling unit and the position of associated outside air dampers.

k. Measure and indicate locally, the differential pressure between the controlled access area and the outside and alarm in the control room upon detection of a high or low differential.

The system continuously supplies filtered, cooled or heated air to 4 zones of the controlled access area under normal and post accident conditions if offsite power is available. The system is connected to Class 1E buses. The air handling unit supplies a mixture of makeup and outside air. The laboratory hood supply fan furnishes air from the Turbine Building. The controlled access area ambient pressure and temperatures are controlled, and the various system motors are interlocked as indicated in the listing of instrumentation and control devices above. The cooling coils are each supplied from the NNS Chilled Water System. The air handling unit is located in the Control Building equipment area. The laboratory hood supply fan is located in the Turbine Building. The air handling unit and the laboratory hood supply fan is manually operated from the control room. 00-01

9.4.1.2.5 Controlled Access Area Exhaust System

The main components of the system include:

1. A 100% capacity controlled access area filter plenum, including roughing filters (80% efficiency on NBS dust), HEPA filters (99.97% efficiency on 0.3 micron particles), charcoal filters (95% efficiency on methyl iodide at 85% relative humidity and 70°F), and final HEPA filters (same efficiency as previous HEPA filters). The filter plenum also includes a water deluge system.

2. Two (2) 100% capacity controlled access area filter exhaust fans.

3. Exhaust ducts from controlled access areas to the filter plenum, exhaust fans, and plant vent.

4. Air operated, spring opposed dampers to isolate the exhaust fans when not in use.

5. Fire dampers in zone exhaust ducts.

6. Instrumentation and control devices for each component to perform the following functions:

    a. Measure the pressure drop across each filter bank (local indication only).

    b. Cause an alarm in the control room upon detection of high concentration of smoke at the filter inlet.

    c. Cause an alarm in the control room upon detection of high air temperature in the filter fan discharge ducts.

    d. Cause an alarm in the control room upon detection of high temperature of the plenum discharge air or in the filter charcoal bed.

    e. Indicate, in the control room, the position of the filter exhaust fan isolation dampers and interlock damper position with exhaust fan operation.

    f. Indicate, in the control room, exhaust fan operation.

The system operates continuously under normal conditions and emergency conditions if power is available. Power for the controlled access area exhaust and the laboratory hood exhaust fans is normally supplied from the Class 1E bus. The system exhausts and filters air from normal and hot toilet, shower and locker areas, laundry areas, laboratory hood areas, count room, medical room, and storage areas of the controlled access area. After being filtered, the exhaust air is directed by either of the operating exhaust fans to the main plant vent. The controlled access area filter plenum and exhaust fans are in a shielded location in the Control Building. The exhaust fans are manually operated from the control room.

9.4.1.2.6 SAS/CPU Computer Rooms Cooling System

The main components of this system include:

1. A 32% capacity air handling unit (XAH-18-AH), including roughing filters (80% efficiency on NBS dust), coil face, bypass dampers, coil section with chilled water coil, and fan section. Chilled water is provided by the Non-nuclear Safety Related Chilled Water System. See 9.4.7.2.12.

2. A 68% capacity air handling unit (XAH-51-AH), including filters, coil section with R-22 refrigerant coil, and fan section.

3. Electric reheat coils in the supply duct.

4. Supply, return, relief, and outside air ducts.

5. Air operated, spring opposed dampers in the outside air, relief air, and return air ducts.

6. Instrumentation and control devices to perform the following functions:

   a. Measure the pressure drop across the air handling unit XAH-18-AH filter bank (local indication only).

   b. Cause an alarm in the control room upon detection of high air temperature in the air handling unit XAH-18-AH discharge.

   c. Cause an alarm in the control room upon detection of high or low SAS/CPU computer rooms space temperature.

   d. Indicate, in the control room, damper position for the outside air, return air, and the relief air dampers.

   e. Provide means for manual control from the control room of the outside, return, and relief damper positions.

   f. Provide means for automatically placing the system in the emergency recirculation mode (close outside air and relief dampers and open return dampers) upon receipt of a safety injection signal or high radiation signal (RM-A1).

   g. Automatically maintain SAS/CPU computer rooms temperature by modulating coil face and bypass damper position and an electric reheat coil in the supply duct.

   h. Interlock the reheat coil so it is inoperative when its corresponding air handling unit fan is not energized.

   i. Indicate, in the control room, air handling unit operation (XAH-18-AH only).

   j. Automatically shut down air handling unit XAH-18-AH and XAH-51-AH upon halon release to either computer room or the SAS room. | 99-01

The system continuously supplies filtered, cooled or heated air to the SAS/CPU computer rooms when normal power is available. Outside air flow is manually controlled from the control room. The room temperature is maintained and system dampers are operated as indicated by the listing of instrumentation and control devices, above. The cooling coil in XAH-18-AH is supplied from the non-nuclear safety related Chilled Water System. The XAH-18-AH air handling unit is located in the Control Building equipment area. The units XAH-18-AH and XAH-51-AH, and the outside, return and relief dampers are manually operated from the control room. The cooling coil in XAH-51-AH is supplied from condensing unit XRC-24-AH. The XAH-51-AH air handling unit is located in the Control Building on elevation 436'-0". 00-01

9.4.1.2.7 Microwave Relay Room System

The major components of the microwave relay room system include the following:

1. A 100% capacity air conditioning unit, including refrigeration system, electric heating coil, and fan.

2. Supply and return air ducts.

3. Filter-grille with roughing filter (30% efficiency on NBS dust).

4. Instrumentation and control devices to perform the following functions:

    a. Cause an alarm in the control room upon detection of high or low microwave relay room space temperature.

    b. Automatically maintain microwave relay room temperature by cycling the refrigeration system and the electric heating coil in the air conditioning unit.

The system continuously supplies filtered, cooled or heated air to the microwave relay room when normal power is available. This is a total recirculation system with no outside/exhaust air. Room temperature is maintained by the instrumentation and control devices noted above. The refrigeration system is self-contained and is air cooled. The air conditioning unit is located on the Control Building roof.

9.4.1.2.8 Microwave Battery Room System

Major components of the microwave battery room system include the following:

1. A 100% capacity exhaust fan.

2. A 100% capacity outside air intake head.

3. Supply and exhaust air ducts.

4. Filter-grille with roughing filter (30% efficiency on NBS duct).

5. Instrumentation and control devices to perform the following functions: 99-01

   a. Cause an alarm in the control room upon detection of high or low microwave battery room space temperature.

   b. Automatically maintain minimum microwave battery room temperature by cycling the electric unit heater.

   c. Provide means to shift exhaust fan from low speed to high speed when outside air temperature exceeds the setpoint temperature.

The system continuously exhausts air from the microwave battery room to the atmosphere when normal power is available. Makeup air enters the space through louvers in the battery room door adjoining the corridor space. Outside air is drawn into the corridor space through an intake head and filter-grille in the corridor roof. An electric unit heater, located in the corridor heats the air as necessary to maintain the desired minimum microwave battery room space temperature. Equipment is located on the microwave battery room roof.

9.4.1.2.9 Control Building Office Space System

The major components of the Control Building office space cooling system include the following:

1. A 100% capacity air handling unit with roughing filter and refrigerant coil.

2. A 100% capacity remotely mounted condensing unit, including refrigerant compressor and controls. 99-01

3. Ductwork between the air handling unit and the office space for supply and return. The function of this system is to provide cooling for personnel comfort.

4. A 100% capacity electric unit heater.

9.4.1.2.10 Control Building Elevator Machine Room System

Major components of the Control Building elevator machine room system include the following:

1. A 100% capacity exhaust fan.

2. Fixed, wall inlet louvers.

3. A 100% capacity electric unit heater.

4. Instrumentation and control devices to perform the following functions:

   a. Automatically limit maximum elevator machine room temperature by cycling the exhaust fan.

   b. Automatically limit minimum elevator machine room temperature by cycling the electric unit heater.

The system cyclically exhausts air from the elevator machine room to the atmosphere in response to a room thermostat when normal power is available. Makeup air enters the room through wall louvers. A built-in thermostat cycles the electric unit heater to maintain minimum room temperature. Equipment is located in the Control Building elevator machine room.

9.4.1.3 Safety Evaluation

The control room and relay room systems are designed, protected and arranged with sufficient redundancy to ensure system cooling and filtering operation after a LOCA, assuming a single failure. Loss of the nonredundant instrument air results in decreased space temperatures which do not adversely affect installed equipment. The control room and relay room areas are independent of each other. Each area is served by 2, separated, independent HVAC and filtering subsystems supplied from separate Class 1E electric power supplies. Each system is served by separate instrumentation for control and monitoring. This equipment is Seismic Category 1, located in a Seismic Category 1 structure, and is not subject to floods, weather, external missiles, jet impingement or pipe whip.

The equipment areas are separated by fire walls. Ducts from equipment areas to the control room and relay room are protected by fire dampers. Thus, fire in either equipment area is isolated to that area and operation of the standby system is not affected.

The gaseous activity channel of RM-A1 automatically closes the outside air dampers of the relay room places both systems in the recirculation or emergency mode upon detection of high activity in the air supplied to the control room. High temperature in the supply ducts to the control room and to the relay room or in the discharge duct from the emergency filter system causes an alarm to be actuated in the control room. Smoke in the return duct from the control room to the normal and emergency filter air handling systems causes an alarm to be actuated in the control room. Air flow rates in the outside air ducts to the control room and to the relay room are indicated in the control room. 99-01 99-01

During normal and emergency operation, the control room is pressurized through the introduction of a fixed amount of outside air. The flow of outside air to the relay room is fixed but is manually adjustable. In the emergency mode control room air is filtered through roughing, HEPA and charcoal filters. Recirculated relay room air is not filtered.

For smoke removal, system dampers for both control and relay room systems can be positioned manually to purge with outside air at rates up to 100%. Prior to purging the control room, the chlorine bottles in the chlorine shed must have their cylinder valves closed, then the relief damper blanking plates and outside air duct blanking plates must be removed in conjunction with closing the system return air damper. Degradation of equipment performance as a result of excess temperature and humidity is not anticipated since the control and relay room systems are designed in accordance with the criteria specified above. RN 01-081

9.4.1.4 Inspection and Testing Requirements

The Control Building area systems are subjected to preoperational testing in accordance with written procedures to verify proper wiring and control hookup, filter and duct system inplace integrity and leak tightness, proper function of system components and control devices and to establish system design water and air flow rates.

To ensure a continued state of readiness of the Control Building area systems after completion of the preoperational tests, the following inspection, maintenance and test procedures are performed.

1. Control Room System

   a. Record filter pressure drops.

   b. Verify function of dampers, valves and control devices necessary for monitoring or component isolation or changeover from normal to emergency mode.

   c. Bearing lubrication.

   d. Switch components that normally operate from standby to operating mode

   e. Laboratory test of charcoal filter test canisters for decontamination efficiency.

   f. Inplace leak test of the HEPA and charcoal filters.

2. Relay Room System

   Relay room system inspection, maintenance and test requirements are the same as control room system requirements a. through d.

3. Computer Room System

   Computer room system inspection, maintenance and test requirements are the same as control room system requirements a. through d.

4. Controlled Access Area Supply System

   Controlled access area supply system inspection, maintenance and test requirements are the same as control room system requirements a. through d.

5. Controlled Access Area Exhaust System

   Controlled access area exhaust system inspection, maintenance and test requirements are the same as control room system requirements a. through f.

6. SAS/CPU Computer Room Cooling System

   SAS/CPU Computer room cooling system inspection, maintenance and test requirements are the same as control room system requirements a. and c.

7. Microwave Relay Room System

   Microwave relay room system inspection, maintenance and test requirements are the same as control room system requirement c.

8. Microwave Battery Room System

   Microwave battery room system inspection, maintenance and test requirements are the same as control room system requirement c.

9. Control Building Elevator Machine Room System

   Control Building elevator machine room system inspection, maintenance and test requirements are the same as control room system requirement c.

9.4.2 AUXILIARY AND RADWASTE AREA VENTILATION SYSTEM

Heating, cooling, ventilation, exhaust and filtering are provided throughout various Auxiliary Building, radwaste and hot machine shop areas to satisfy the following general requirements:

1. Maintain ambient air temperatures in all areas between minimum and maximum levels suitable for personnel and equipment.

2. Minimize the release of radioactive airborne particulates and gaseous activity to the atmosphere.

3. Provide for filtration of the refueling water storage tank vent discharge.

9.4.2.1 Design Bases

The systems for the Auxiliary Building and radwaste areas are designed in accordance with the following:

1. The general requirements indicated in Section 9.4.2 are satisfied.

2. Equipment, motors and controls in the Safety Class 2b portions of these systems are supplied from Class 1E electric power sources and have sufficient separation and redundancy to satisfy the single failure criteria.

3. Provision is made for monitoring and actuating alarms in the control room upon detection of: high temperature in ducts, HEPA/charcoal plenums, or pump cubicles; high smoke concentration in ducts; high vibration at fan motors; and motor trip. Provisions are also made for monitoring the following in the control room: damper positions, main plant vent flow rate, and radiation levels in the main plant vent (RM-A3) and waste gas decay tank vent (RM-A10). 02-01

4. Manual control of these systems as indicated is provided in the control room. Pump room units operate automatically when the respective pump operates.

5. Continuous, controlled air flow is maintained from areas of low to progressively higher radiation levels. Maintenance of a negative Auxiliary Building pressure ensures that exfiltration from the Auxiliary Building does not occur.

6. Exhaust air flows through roughing and HEPA filters or through roughing, HEPA, charcoal and HEPA filters, depending upon the potential radioactivity of the areas exhausted.

99-01

9.4.2.2 System Description

The system diagrams for the various auxiliary building and radwaste area systems are as follows:

1. Figure 9.4-6, Auxiliary Building Main Supply System.

2. Figure 9.4-7, Auxiliary Building HEPA Exhaust System.

3. Figure 9.4-8, Auxiliary Building Charcoal Exhaust System.

4. Figure 9.4-9, Auxiliary Building Main Exhaust System.

5. Figure 9.4-10, Auxiliary Building Pump Room and Motor Control Center Cooling Systems

6. Figure 9.4-10a, Hot Machine Shop Ventilation System.

7. Figure 9.4-11, Fuel Handling Building Charcoal Exhaust System and Air Supply Distribution

9.4.2.2.1 Auxiliary Building Main Supply System

The main components of this system include:

1. A 100% capacity supply fan directing ventilation air to various areas of the Auxiliary Building, radwaste areas and to the Fuel Handling Building.

2. Two (2) 50% capacity supply air filter plenums, each consisting of roughing filters (80% efficiency on NBS dust) and electric preheat coils.

3. Electric reheat coils in the zone supply ducts.

4. Air operated, spring opposed dampers to isolate the supply fan when not in use and to close or control the outside air supply.

5. Ductwork from the outside air connection to the filtering and preheating plenums, to the supply fan and to the various Auxiliary Building and radwaste areas.

6. Instrumentation and control devices to perform the following functions:

    a. Measure the pressure drop across the roughing filter banks (local indication only).

    b. Cause an alarm in the control room upon detection of high concentration of smoke in the supply main to the various Auxiliary Building areas.

    c. Cause an alarm in the control room upon detection of high temperature in the supply main to the various Auxiliary Building areas.

    d. Indicate, in the control room, supply fan isolation damper and outside air damper position.

    e. Cause an alarm in the control room upon detection of excessive vibration of the supply fan.

    f. Cause an alarm in the control room upon detection of high or low Auxiliary Building ambient air pressure.

    g. Provide means for manual operation, from the control room, of the supply fan interlocked with its isolation dampers and with the main exhaust fan.

h. Automatically maintain minimum supply air temperature by controlling the supply system preheat coils and provide interlocks to prevent preheat coil operation unless supply fans are operating.

i. Automatically maintain fixed zone supply air temperature by controlling the zone reheat coils.

j. Maintain negative ambient static pressure within the Auxiliary Building by the setting of manual balancing dampers.

k. Indicate, in the control room, supply air fan operation.

l. Cause an alarm in the control room upon detection of supply air fan motor trip.

The Auxiliary Building main supply system continuously supplies outside air that is drawn through the Auxiliary Building supply air plenums where it is filtered and heated as required. The supply air is then ducted to various corridors, demineralizer tank areas, gas decay tank and holdup tank areas, valve areas, and stand-by air compressor area at elevations 485', 463', 436', 412', 397', 388', and 374'. This supply air is then drawn by various exhaust systems through equipment areas and through equipment cubicles. The supply air distribution is arranged so that the resultant exhaust air flow is toward progressively greater levels of activity. The Auxiliary Building supply air fan is manually controlled from the control room and operates continuously if normal power is available. The supply fan is electrically interlocked so that it cannot operate unless one of the Auxiliary Building main exhaust fans is operating, thereby ensuring that the Auxiliary Building ambient pressure does not become positive. The components for this system are located as follows:

1. Supply fan in the Auxiliary Building.

2. Filtering and heating plenums in the Auxiliary Building.

Outside air is drawn into the system through stormproof louvers in a mechanical equipment room roof penthouse.

9.4.2.2.2 Auxiliary Building HEPA Exhaust System

The main components of this system include:

1. Two (2) 100% capacity exhaust fans which exhaust air through the HEPA filter plenum.

2. A 100% capacity filter plenum with roughing filters (80% efficiency on NBS dust) and HEPA filters (99.97% efficiency on 0.3 micron particles).

3. Air operated, spring opposed dampers to isolate the exhaust fans when not in use.

4. Ductwork to direct the exhaust air from various Auxiliary Building areas to the HEPA filter plenum, the exhaust fans and, finally, to the plant vent.

5. Instrumentation and control devices to perform the following functions:

    a. Measure the pressure drop across the roughing/HEPA filter banks (local indication only).

    b. Cause an alarm in the control room upon detection of high concentration of smoke at the inlet of the exhaust filter plenum.

    c. Cause an alarm in the control room upon detection of high temperature in the discharge of either exhaust fan.

    d. Indicate, in the control room, fan isolation damper position.

    e. Cause an alarm in the control room upon detection of excessive vibration of the exhaust fans.

    f. Provide means for manual operation, from the control room, of the exhaust fans interlocked with their respective isolation dampers and with the Auxiliary Building charcoal exhaust fans.

    g. Indicate, in the control room, exhaust fan operation.

    h. Cause an alarm in the control room upon detection of exhaust fan motor trip.

The Auxiliary Building exhaust system continuously exhausts the air furnished by the supply system described in Section 9.4.2.2.1. The exhaust air is drawn from auxiliary building areas with minimum potential for contamination at elevations 485’, 463’, 436’, 412’, 388’, and 374’. The supply and exhaust ducts are arranged so that air flow is always in the direction of progressively greater potential radioactivity. The exhaust air from these areas is continuously drawn through the roughing/HEPA filter plenum prior to ducting to the main exhaust fans and the main plant vent. There is no bypass around this filter plenum. The exhaust fans for this system are manually controlled from the control room and operate continuously if normal power is available. The HEPA exhaust fans are electrically interlocked so that they cannot be operated unless the Auxiliary Building charcoal exhaust fans are in operation. Thus, exhaust flow is always toward the potentially more radioactive areas. The components for this system are located as follows:

1. Exhaust fans, in the Auxiliary Building.

2. Filter plenum, in the Auxiliary Building.

9.4.2.2.3 Auxiliary Building Charcoal Exhaust System

The Auxiliary Building charcoal exhaust system consists of 2 subsystems, one which serves the north portion of the building and the other which serves the south portion of the building. Each subsystem provides approximately 50% of the total building filtration.

The main components of this system include:

99-01

1. Two (2) 100% capacity exhaust fans for each subsystem which exhaust air through the HEPA/charcoal plenum.

2. One (1) 100% capacity filter plenum for each subsystem, which corresponds to 50% capacity relative to the entire Auxiliary Building, each with roughing filters (80% efficiency on NBS dust), HEPA filters (99.97% efficiency on 0.3 micron particles), charcoal filters (95% efficiency on methyl iodide at 85% relative humidity and 70°F) and final HEPA filter (same efficiency as previous HEPA filter bank). The filter plenum also includes a water deluge system.

3. Air operated, spring opposed dampers to isolate the exhaust fans not in use.

4. Ductwork to direct the exhaust air from various Auxiliary Building areas of potentially moderate contamination to the HEPA/charcoal plenum, the exhaust fans and, finally, to the main plant vent.

5. Instrumentation and control devices to perform the following functions:

   a. Measure the pressure drop across the roughing/HEPA/charcoal filter banks (local indication only). 99-01

   b. Cause an alarm in the control room upon detection of high concentration of smoke in the inlet of each filter plenum.

   c. Cause an alarm in the control room upon detection of high temperature in the discharge of any exhaust fan or in either charcoal filter plenum.

   d. Indicate, in the control room, fan isolation damper position.

   e. Cause an alarm in the control room upon detection of excessive vibration of the exhaust fans.

   f. Provide means for manual operation, from the control room, of the exhaust fans interlocked with their respective isolation dampers.

   g. Indicate, in the control room, exhaust fan operation.

   h. Cause an alarm in the control room upon detection of exhaust fan motor trip.

i. Cause an alarm in the control room upon detection of high radiation in the gas decay vent discharge (RM-A10).

The Auxiliary Building charcoal exhaust system continuously exhausts the air furnished by the supply system described in Section 9.4.2.2.1. The exhaust air is drawn from Auxiliary Building areas with moderate potential for radioactive contamination (demineralizers, storage tanks, gas decay tanks, evaporators, pump rooms, etc.) at elevations 463', 436', 412', 397', 388', and 374'. The vent from the refueling water storage tank also discharges into this exhaust system. The supply and exhaust ducts are arranged so that air flow is always in the direction of progressively greater potential radioactivity. Exhaust air from these areas is drawn through the roughing/HEPA/ charcoal filter plenums continuously and is ducted to the main exhaust fans and the main plant vent. There is no bypass around this filter plenum. The exhaust fans for this system are manually controlled from the control room and operate continuously if power is available. The fans stop upon loss of Class 1E bus voltage but may be restarted after Class 1E electric power is regained.

Components of this system are located as follows:

1. Exhaust fans, in the Auxiliary Building.

2. Filter plenum, in the Auxiliary Building.

9.4.2.2.4 Auxiliary Building Main Exhaust System

The main components of this system include:

1. Two (2) 100% capacity main exhaust fans which exhaust air from various Auxiliary and Fuel Handling Building areas to the main plant vent.

2. Two (2) 100% capacity exhaust fan bypass dampers.

3. Air operated, spring opposed dampers to isolate the exhaust fans when not in use.

4. Ductwork to direct the exhaust air from the various systems through the main plant vent.

5. Instrumentation and control devices to perform the following functions:

   a. Cause an alarm in the control room upon detection of high concentrations of smoke in the discharge of either exhaust fan.

   b. Cause an alarm in the control room upon detection of high temperature in the discharge of either exhaust fan.

   c. Cause an alarm in the control room upon detection of excessive vibration of the exhaust fans.

   d. Indicate, in the control room, fan isolation damper position.

   e. Provide means for manual operation, from the control room, of the main exhaust fans. Fan isolation dampers operate in conjunction with associated fans. The Auxiliary Building HEPA exhaust fans must be operating prior to starting one of the main exhaust fans.

   f. Provide means for automatically opening the bypass dampers when neither of the main exhaust fans is operating.

   g. Indicate, in the control room, the main plant vent flow rate.

   h. Indicate, in the control room, exhaust fan operation.

   i. Cause an alarm in the control room upon detection of exhaust fan motor trip.

   j. Cause an alarm in the control room upon detection of a high radiation level in the main plant vent (RM-A3).

The Auxiliary Building main exhaust system operates continuously to direct all air from the Fuel Handling Building exhaust system, the Auxiliary Building HEPA exhaust system and the Auxiliary Building charcoal exhaust system to the main plant vent. Interlocking of the various systems prevents operation of the Auxiliary or Fuel Handling Building supply fans unless the exhaust system is operating. Similar interlocking prevents operation of the Auxiliary Building HEPA exhaust fans unless the Auxiliary Building charcoal exhaust fans are operating. Thus, the Auxiliary Building and Fuel Handling Building ambient pressure does not become positive and the exhaust flow paths toward increasing potential radioactivity are not violated. The main exhaust fans are manually controlled from the control room and use non-Class 1E power.

9.4.2.2.5 Auxiliary Building Pump Room Cooling Systems

The main components of these systems include:

1. For each charging pump room and each residual heat removal/Reactor Building spray pump room, a 100% capacity air handling unit consisting of fan section, chilled water coil and roughing filter.

2. Ductwork supply and return from each air handling unit to its respective room.

3. Instrumentation and control devices for each system to perform the following functions:

    a. Measure the pressure drop across the roughing filter (local indication only).

    b. Cause an alarm in the control room upon detection of high concentration of smoke at the inlet of the charging pump room fans or at the discharge of the residual heat removal/Reactor Building spray pump room fans.

    c. Cause an alarm in the control room upon detection of high temperature in the discharge of the fan.

    d. Indicate, in the control room, fan operation.

    e. Cause an alarm in the control room upon detection of fan motor trip.

    f. Cause an alarm in the control room upon detection of high pump room temperature.

    g. Provide the means for manual control of pump room air handling units from the control room and for automatic operation of the units interlocked with pumps.

The air handling units are mounted in locations shielded from the pump rooms, accessible for maintenance, supplied with safety class chilled water and operate either manually or automatically when the pumps are energized. The units are powered from the Class 1E electric system. 00-01

9.4.2.2.6 Hot Machine Shop Ventilation System

A. Auxiliary Building Hot Machine Shop

The main components of this system include:

1. A 100% capacity supply fan directing ventilation air to the hot machine shop.

2. A 100% capacity, two-speed exhaust fan exhausting air from various hot machine shop areas.

3. Ductwork to the supply fan from an outside air inlet connection with roughing filters and electric heating coil. Ductwork from various hot machine shop areas to the fuel handling building exhaust filter plenums.

4. Three (3) electric unit heaters along the perimeter walls of the hot machine shop.

5. Instrumentation and control devices to perform the following functions:

   a. Modulate return and outside air dampers in the system ductwork in accordance with a differential pressure controller. The differential pressure controller maintains a negative differential pressure between the hot machine shop and the outside.

   b. Control the electric duct heater with a room thermostat.

   c. Control the electric unit heaters with integral thermostats.

When normal power is available, the hot machine shop supply and exhaust fans are operated so as to maintain air supply to and exhaust from the hot machine shop when required. The supply and exhaust fans are controlled from location stations and are supplied from non-Class 1E power sources. 02-01

B. Radiological Maintenance Building Hot Machine Shop

The main components of this system include:

1. Two (2) air handling units, each comprised of a roughing filter, electric heating coil, a direct expansion cooling coil, and fan section continuously operate. Each air handling unit is rated at 50% of the required supply air flow.

2. Each air handling unit has an associated air cooled condensing unit.

3. A centrifugal exhaust fan rated at 100% of the required exhaust air flow.

4. A filter plenum containing a roughing and HEPA filter bank. The filter is rated at 100% of the exhaust air flow.

5. Four (4) electric unit heaters provide perimeter heating. Two (2) electric unit heaters are installed at the outside roll-up door.

6. Ductwork between the air handling units and points of distribution, between exhaust registers and HEPA filter plenum, between HEPA filter plenum and exhaust fan, and between exhaust fan and the plant vent.

7. Instrumentation and control devices to perform the following functions:

    a. Each air handling unit, condensing unit, and exhaust fan is energized from a local disconnect switch.

    b. Air handling unit fans are interlocked with the exhaust fan.

    c. Room thermostats set at 104°F control the operation of the condensing units and cycle them as necessary.

    d. A smoke detector in the discharge duct of each air handling unit de-energizes the associated fan if smoke is present in the duct.

    e. Each electric unit heater is controlled by a built-in thermostat.

9.4.2.2.7 Hot Machine Shop Decontamination Area Ventilation System

The main components of this system include:

1. An air handling unit comprised of a roughing filter section, an electric heating coil section and a fan section. The unit is rated at 100% of the required supply air flow.

2. An exhaust fan rated at 100% of the required exhaust air flow.

3. A filter plenum containing a roughing and a HEPA filter bank. The filter is rated at 100% of the exhaust air flow.

4. Ductwork between the air handling unit and the points of distribution, between the wall hoods and the filter, between the filter and the exhaust fan, and between the exhaust fan and the plant vent. The ductwork contains an automatic isolation damper for each fan which closes when the respective fan is off and vice versa.

5. Instrumentation and control devices to perform the following functions:

   a. To sense and correct the air handling unit supply air temperature by energizing the electric heating coil.

   b. To sense and alarm locally in the event of high temperature air in both the supply and exhaust ducts.

   c. To indicate locally the pressure differential air on each exhaust filter bank.

   All components of this system are non-nuclear safety. When normal power is available, both fans operate continuously to supply air to and exhaust air from the wall hoods when required. The fans are controlled from local stations and are supplied from non-Class 1E power sources. 02-01

9.4.2.2.8 Auxiliary Building Motor Control Center and Switchgear Areas Cooling Systems

The main components of these systems include:

1. Three (3) 100% capacity air handling units and 2 non-nuclear safety class supplemental air handling units for the safety class switching gear areas on elevation 412' and 463'. Each of these air handling units serves 1 of the 3 motor control center and switchgear areas. The safety class air handling units serving motor control center and switchgear areas at elevations 412' and 463' each include a fan section, chilled water coil supplied with safety class chilled water (see Section 9.4.7.2.4) and roughing filter. The non-safety class air handling units serving the motor control center and switchgear areas includes a fan section, direct expansion type cooling coil and roughing filter. Also a part of the non-safety class systems are a remotely mounted condensing unit, including refrigerant compressor, condensing section, piping and controls. 00-01

2. Ductwork from the various air handling units to the areas requiring cooling.

3. Instrumentation and control devices for each system to perform the following functions:

   a. Measure the pressure drop across the roughing filter (local indication only), except the non-safety class units.

   b. Cause an alarm in the control room upon detection of high concentration of smoke in the electrical equipment room.

   c. Cause an alarm in the control room upon detection of high temperature in the discharge of the air handling unit or in the electrical equipment room.

d. Indicate, in the control room, fan operation (safety related fans only).

e. Cause an alarm in the control room upon detection of fan motor trip (safety related fans only).

f. Automatically cycle the selected air handling unit in response to a room thermostat (safety related fans only).

The air handling units in each of the two safety related systems recirculate and cool while cycling on/off in response to a room thermostat. Under emergency conditions, the thermostat control of the safety related air handling unit is bypassed and the units start and operate continuously following receipt of a safety injection or loss of offsite power signal. Power is supplied to the safety related units at elevations 412' and 463' from separated, independent Class 1E power sources. Power is supplied to the non-safety related system from a non-Class 1E source. The air handling unit at elevation 436' operates continuously when started at the local control station. The non-safety class cooling systems for the switchgear areas at elevation 412' and 463' are controlled by temperature switches in the rooms. A room thermostat controls the refrigerant solenoid valves. The safety related air handling units can be manually started or stopped from the control room.

9.4.2.2.9 Hot Instrument Repair Shop Ventilation System

The main components of this system are contained in a single, factory-assembled, through the wall, air conditioner with built-in electric heating coil. All controls are self-contained. No ductwork is employed with this system which is classed as non-nuclear safety.

This system operates continuously. The unit compressor and electric heating coil cycle as required to maintain the room temperature controlled by the self-contained thermostat.

9.4.2.2.10 Auxiliary Building Elevator Machine Room Exhaust System

The main components of this system are an exhaust fan with back-draft damper, a gravity-operated air louver and electric unit heater. A room thermostat cycles the fan. A self-contained thermostat cycles the unit heater. No ductwork is employed. The system is non-nuclear safety class.

9.4.2.2.11 HP Calibration Lab and Repair Shop HVAC System

The main components of this system include:

1. A self-contained, air-cooled heat pump containing a compressor motor, an indoor fan motor, an outdoor fan motor and an electric heating coil.

2. Ductwork to and from the lab and shop including manual balancing dampers in the return and outside air ducts, a splitter damper in the supply duct, supply air diffusers, return registers and a roughing filter.

3. Controls include a compressor crankcase heater, automatic defrost package, room thermostat and switchbase, emergency heat relay and outdoor thermostat package. All motors have thermal-and-current- sensitive overload devices.

This system is classed as non-nuclear safety.

The heat pump is started by a remote manual switch which causes its indoor fan to operate continuously to provide air circulation and ventilation. The compressor and electric heating coil cycle automatically under thermostatic control to maintain the space temperature.

9.4.2.3 Safety Evaluation

The auxiliary and radwaste area systems, excluding the pump room units, and motor control center and switchgear cooling units at elevations 412' and 463', are not safety class systems. However, redundant fans are provided for the main exhaust, the charcoal exhaust and the HEPA exhaust systems. Charcoal exhaust fans and plenums are physically separated, housed in shielded concrete enclosures and the fans receive power from the Class 1E electric system. All charcoal and HEPA filter plenums are constructed in accordance with Seismic Category 1 requirements. Additionally, provision is made for suitable maintenance and change-out space and adequate instrumentation and lighting, all of which reduce personnel exposure.

The pump room systems and the motor control center and switchgear cooling units are not redundant but are arranged as single units for each pump room. Loss of a pump room, motor control center or switchgear cooling unit requires use of redundant equipment and its cooling unit. The cooling units are separated, located in an accessible, shielded location and are not subject to floods, weather, external missiles, jet impingement or pipe whip. The pump room units are powered from separated Class 1E power supplies.

Where indicated, units are administratively controlled from the control room during normal operating or refueling periods. This control is subject to protective electric interlocking so that negative auxiliary building pressure and design air flow paths are maintained. Operation of the pump room units is automatic. These units operate when the associated pump operates.

Where indicated, units are monitored from and alarms are provided in the control room. The charcoal plenums have manually actuated water deluge systems for fire protection.

Radiation levels in the charcoal filters, the exhaust from the gas decay vent and the main plant vent exhaust are monitored from, and alarms are provided in, the control room. Exhaust filter plenums provide a minimum of 95% removal efficiency for both organic and elemental forms of iodine.

9.4.2.4 Inspection and Testing Requirements

The auxiliary and radwaste area ventilation systems are subjected to preoperational test procedures to verify proper wiring and control hookup, system inplace integrity and leak tightness, proper function of system components and control devices and to establish system design air flows.

To ensure a continued state of readiness of the auxiliary and radwaste area ventilation systems after completion of the preoperational tests, the following inspection, maintenance and test procedures are performed:

1. Auxiliary Building Charcoal Exhaust System

    a. Record filter pressure drops.

    b. Verify function of dampers or control devices necessary for monitoring, component isolation or changeover from normal to emergency mode.

    c. Bearing lubrication.

    d. Switch components that normally operate from standby to operating mode.

    e. Laboratory test of charcoal filter test canisters for decontamination efficiency.

    f. Inplace leak test of HEPA and charcoal filters.

2. Auxiliary Building HEPA Exhaust System

    Auxiliary Building HEPA exhaust system inspection, maintenance and testing requirements are the same as Auxiliary Building charcoal exhaust system requirements a. through d. and inplace leak test of HEPA filters.

3. Auxiliary Building Main Exhaust System

   Auxiliary Building main exhaust system inspection, maintenance and testing requirements are the same as Auxiliary Building charcoal exhaust system requirements b. through d.

4. Auxiliary Building Main Supply System

   Auxiliary Building main supply system inspection, maintenance and testing requirements are the same as Auxiliary Building charcoal exhaust system requirements a., c., and d.

5. Auxiliary Building Pump Room Cooling System

   Auxiliary Building pump room cooling system inspection, maintenance and testing requirements are the same as Auxiliary Building charcoal exhaust system requirements a. through d.

6. Hot Machine Shop Ventilation System

   Hot machine shop ventilation system inspection, maintenance and testing requirements are the same as the Auxiliary Building charcoal exhaust system requirements a. through d.

7. Hot Machine Shop Decontamination Ventilation System

   Hot machine shop decontamination ventilation system inspection, maintenance and testing requirements are the same as the Auxiliary Building charcoal exhaust requirements a. through d., plus inplace leak test of HEPA filters.

8. Auxiliary Building Motor Control Center and Switchgear Areas Cooling System

   Auxiliary Building motor control center and switchgear areas cooling system inspection, maintenance and testing requirements are the same as the Auxiliary Building charcoal exhaust system requirements a. through d.

9. Hot Instrument Repair Shop Ventilation System

   Hot instrument repair shop package HVAC system inspection, maintenance and testing requirements are the same as the Auxiliary Building charcoal exhaust system requirement d.

10. Auxiliary Building Elevator Machine Room Exhaust System

    Auxiliary Building elevator machine room exhaust system inspection, maintenance and testing requirements are the same as the Auxiliary Building charcoal exhaust system requirement d.

11. HP Calibration Lab and Repair Shop HVAC System

    Calibration lab and repair shop air conditioning system inspection, maintenance and testing requirements are the same as the Auxiliary Building charcoal exhaust system requirements b. and d.

9.4.3 FUEL HANDLING BUILDING VENTILATION

Continuous ventilation and exhaust of the spent fuel pool area and the Fuel Handling Building results in an environment suitable for personnel and equipment. Additionally condensation from the fuel pool area and the release of airborne radioactivity to the atmosphere is minimized.

9.4.3.1 Design Bases

The system for the spent fuel pool area are designed in accordance with the following:

1. Equipment motors and controls in the safety class portions of the systems are supplied from Class 1E electric power sources and have sufficient redundancy to satisfy the single failure criteria.

2. Provision is made for monitoring and manual control of the safety class portions of the systems from the control room. Operation of exhaust system fans and dampers is initiated automatically by a loss of offsite power signal.

3. The supply and exhaust systems provide continuous flow across the spent fuel pool water surface and provide controlled ventilation air flow in other Fuel Handling Building spaces. Ventilation air flow is from areas of low to progressively higher radiation levels.

4. Ventilation air is supplied to the Fuel Handling Building from the Auxiliary Building by two non-safety related fans. These fans are not automatically tripped during accident or high radiation situations and will usually operate during normal and emergency conditions. One of two safety related exhaust fans is operated during normal and emergency conditions. Supply and exhaust air flow are balanced so that a negative pressure with respect to the outside of at least 1/8 inch water gage is maintained in the Fuel Handling Building with both supply fans and one exhaust fan operating. Postulated failures of the non-safety related supply fans would result in a negative pressure of more than 1/8 inch which would provide additional assurance in preventing the outflow of unfiltered air.

5. Ventilation air flow is directed through a roughing, HEPA and charcoal filter assembly to minimize the radioactivity being released to the plant vent.

6. Provision is made to maintain a minimum ventilating supply air temperature to the Fuel Handling Building of 65°F.

7. Provision is made to monitor normal and abnormal radiation levels in the area.

99-01

9.4.3.2 System Description

The system diagrams for the various spent fuel pool area systems are as follows:

1. Figure 9.4-11, Fuel Handling Building Charcoal Exhaust System and Air Supply Distribution.

2. Figure 9.4-6, Auxiliary Building Main Supply System.

Design and performance data are indicated on these figures.

9.4.3.2.1 Fuel Handling Building Supply and Charcoal Exhaust System

The main components of this system include:

1. Two (2) 100% capacity fuel handling building exhaust fans which draw air through the HEPA/charcoal filter plenums.

2. Three (3) 50% capacity filter plenums, each consisting of roughing filters (80% efficiency on NBS dust), HEPA filters (99.97% efficiency on 0.3 micron particles), charcoal filters (95% efficiency on methyl iodide at 95% relative humidity and 86° F, and final HEPA filters (same efficiency as previous HEPA filter). The filter plenum also includes a water deluge system. 00-01

3. A 100% capacity supply fan which directs outside air across the spent fuel pool surface.

4. Air operated, spring opposed dampers to isolate the supply and exhaust fans when not in use.

5. One electric reheat coil in each supply duct.

6. Ductwork which directs the supply air to the spent fuel pool surface, and various areas of the building, exhausts this air from the spent fuel pool surface and exhausts air from various Fuel Handling Building areas through the charcoal/HEPA filter plenum to the exhaust fans and the plant vent.

7. Instrumentation and control devices to perform the following functions:

   a. Measure the pressure drop across the HEPA/charcoal filter banks (local indication only).

   b. Cause an alarm in the control room upon detection of high concentration of smoke in the inlet of the exhaust plenum.

   c. Cause an alarm in the control room upon detection of high temperature in any one of the charcoal filter plenums, in the discharge of either exhaust fan or in the discharge of the supply fan.

   d. Indicate, in the control room, supply and exhaust fan isolation damper position.

   e. Cause an alarm in the control room upon detection of excessive vibration of the supply or exhaust fans.

   f. Provide means for manual operation of the following components from the control room:

      (1) Exhaust fans interlocked with associated isolation dampers.

      (2) Supply fan interlocked with associated dampers and the exhaust fans.

   g. Provide means for automatic operation of the exhaust fans upon receipt of a loss of offsite power signal.

   h. Automatically maintain minimum supply air temperature by controlling the supply system reheat coil.

   i. Indicate, in the control room, supply or exhaust fan operation.

   j. Cause an alarm in the control room upon detection of exhaust fan motor trip.

   k. Provide for radiation monitoring (RM-A6) and cause an alarm in the control room upon detection of radioactivity levels exceeding the setpoint in the Fuel Handling Building exhaust (see Section 12.2.4).

The system continuously supplies outside air that has been drawn through the Auxiliary Building supply air plenums where it is filtered and heated as required. The supply air is directed across the width of the spent fuel pool water surface so that gases or particles are entrained in the "push-pull" air flow above the water surface. The exhaust air is collected along the opposite side of the spent fuel pool. Supply air is also directed to various other parts of the building. Exhaust air is also drawn from various decontamination, holdup, filter and general areas of the Fuel Handling Building with air flow rates varying from 6 to 10 changes per hour. Ventilation air flow is directed from areas of low to progressively higher activity. Higher ventilation air flow rates occur in potentially high radioactive areas.

The total exhaust from the Fuel Handling Building is drawn through the HEPA/charcoal filters and ducted to the Auxiliary Building main exhaust fans and the main plant vent. Both Fuel Handling Building exhaust fans operate following a loss of offsite power. Continuing exhaust flow maintains Fuel Handling Building negative pressure under loss of offsite power conditions.

The supply system may be operated if normal power is available. The components for this system are located as follows:

1. Exhaust fans, in the Auxiliary Building.

2. Exhaust filters, in the Auxiliary Building.

3. Supply fan, in the Auxiliary Building.

A comparison of the spent fuel pool area charcoal filter plenums with Regulatory Guide 1.52 requirements is given in Table 6.5-1. General compliance with Regulatory Guide 1.52 is discussed in Appendix 3A.

9.4.3.3 Safety Evaluation

The Fuel Handling Building exhaust system fans and filters are arranged with sufficient redundant equipment to ensure that the system can sustain a single failure without impairing full functional capability of the standby system or component. The exhaust system fans and filters are separated, shielded and are served by separate Class 1E electric power supplies. Each is served by separate instrumentation, control and monitoring components. The fans and filters are Seismic Category 1, located in a Seismic Category 1 structure and are not subject to floods, weather, external missiles, jet impingement or pipe whip. Additionally, provision is made for suitable maintenance and change-out space and adequate instrumentation and lighting, all of which reduce personnel exposure.

The supply and exhaust system are administratively controlled during normal operating or refueling periods. However, the exhaust system starts automatically upon loss of offsite power, thus ensuring that a negative pressure is maintained in the Fuel Handling Building.

Exhaust air from the spent fuel area and from potentially radioactive areas of the Fuel Handling Building is monitored for particulate, iodine and gaseous activity (RM-A6). A control room alarm is actuated upon detection of high radiation. The charcoal exhaust plenums have internal temperature sensing devices and water deluge systems for fire protection.

The spent fuel ventilation system filter trains provide a minimum of 99.95% removal efficiency for particulates and a minimum of 95% removal efficiency for methyl iodine at 95% relative humidity and 86°F. 00-01

RN 12-034

9.4.3.4 Inspection and Testing Requirements 02-01

The spent fuel pool equipment is subjected to preoperational testing in accordance with written procedures to verify proper wiring and control hookup, system inplace integrity and leaktightness, proper function of system components and control devices and to establish system design air flow rates.

To ensure a continued state of readiness of the spent fuel pool area ventilation system after completion of the preoperation tests, the following inspection, maintenance and test procedures are performed:

1. Spent Fuel Pool Exhaust Fans and Filters

    a. Record filter pressure drops.

    b. Verify function of dampers or control devices necessary for monitoring, component isolation or changeover from normal to emergency mode.

    c. Bearing lubrication.

    d. Switch components that normally operate from standby to operating mode.

    e. Laboratory test of charcoal filter test canisters for decontamination efficiency.

    f. Inplace leak test of HEPA and charcoal filters.

2. Spent Fuel Pool Supply Fan

   Spent fuel pool supply fan inspection, maintenance and testing requirements are the same as spent fuel pool exhaust fan and filter requirements b and c.

9.4.4 TURBINE BUILDING

Ventilation and cooling of the Turbine Building areas are provided by the Turbine Building ventilation system and by the Turbine Building switchgear room cooling system.

9.4.4.1 Design Bases

1. Limit the maximum average turbine building temperature to 120°F by means of the Turbine Building exhaust system.

2. Limit the maximum average switchgear room temperature to 104°F and the minimum average temperature to 40°F by means of the Turbine Building switchgear room cooling system.

All components of the Turbine Building ventilation system and switchgear room cooling system are non-nuclear safety class and non-Seismic Category 1.

9.4.4.2 System Description

The system diagrams for the Turbine Building area ventilation system are as follows:

1. Figure 9.4-12, Turbine Building Ventilation System.

2. Figure 9.4-13, Turbine Building Switchgear Room Cooling System.

9.4.4.2.1 Turbine Building Ventilation System and Switchgear Room Cooling System

The main components of this system include:

1. Seven (7) 120 inch diameter roof exhaust fans with powered isolation dampers over the general Turbine Building roof.

2. Three (3) 48 inch diameter roof exhaust fans with powered isolation dampers over the heater bay roof.

3. Inlet wall louvers along the north and east walls of the heater bay and along the south wall of the general Turbine Building.

4. Two (2) "draw-through" type air handling units for the switchgear rooms, each with roughing filters, chilled water cooling coil, fan and motor section. Chilled water is provided by the Turbine Building switchgear rooms chilled water system. See Section 9.4.7.2.11.

5. Supply and return ductwork from the switchgear units to the turbine room switchgear areas at elevations 412', 436', and 463'.

6. Five (5) thermostatically controlled electric unit heaters for the switchgear rooms. | 00-01

7. Instrumentation and control devices to perform the following functions:

   a. Measure the pressure drop across the switchgear room air handling unit roughing filter bank (local indication only).

   b. Cause an alarm in the control room upon detection of high temperature in the switchgear cooling system air handling unit supply duct or in the switchgear rooms.

   c. Cause an alarm in the control room upon detection of high concentration of smoke in the switchgear room cooling system air handling unit supply duct or at the Turbine Building exhaust fans.

   d. Provide interlocks so that the Turbine Building exhaust fans do not operate unless the exhaust dampers at the roof exhaust fans are open.

   e. Provide means for manual operation and control of the roof exhaust fans from a local control station.

   f. Provide for operation of switchgear room cooling system air handling units from a local station and automatic control of chilled water pumps by means of room thermostats.

   g. Provide interlocks so that switchgear room cooling system air handling units do not operate unless isolation dampers are fully open.

   h. Cause an alarm in the control room upon trip of the switchgear room cooling system air handling unit.

   i. Provide interlocks so that Turbine Building exhaust fan dampers open upon detection of high temperature.

   j. Automatically close the inlet wall louvers along the south wall of the Turbine Building upon receipt of a signal from the transformer area fire protection system.

9.4.4.3 Safety Evaluation

The Turbine Building ventilation system and the Turbine Building switchgear room cooling system serve no safety function. They maintain acceptable temperatures in the building during all seasons. Redundancy of equipment is provided to maintain Turbine Building switchgear room cooling. Failure of Turbine Building ventilation system or switchgear room cooling system components does not result in conditions affecting safe operation of the plant. There is no requirement to maintain any preferred air flow pattern or specific building pressure. The function and fire safety aspects of all units of these systems are monitored, and appropriate alarms are actuated upon the occurrence of abnormal conditions, in the control room.

9.4.4.4 Inspection and Testing Requirements

The Turbine Building ventilation system and the Turbine Building switchgear room cooling system are subjected to preoperational testing to verify proper wiring and functioning of system components and control devices. Turbine Building ventilation systems are maintained as necessary to provide adequate ventilation.

9.4.5 ENGINEERED SAFETY FEATURES VENTILATION SYSTEM

The engineered safety features ventilation system design bases, system description, safety evaluation and inspection and testing requirements are described in the following sections:

1. Reactor Building cooling units - Section 6.2.2.

2. Control room normal ventilation and emergency filter system - Section 9.4.1.2.1.

3. Relay room cooling system - Section 9.4.1.2.2.

4. Cooling units for residual heat removal/Reactor Building spray pump rooms - Section 9.4.2.2.5.

5. Cooling units for charging pump rooms - Section 9.4.2.2.5.

6. Engineered safety features switchgear rooms cooling systems - Section 9.4.6.2.2.

7. Battery rooms ventilation system - Section 9.4.6.2.3.

8. Service water booster pumps area cooling system - Section 9.4.6.2.5. | 99-01

9. Cooling units for emergency feedwater pump rooms - Section 9.4.6.2.5.

10. Diesel Generator Building ventilation system - Section 9.4.7.2.1.

11. Service Water Pumphouse ventilation system - Section 9.4.7.2.2.

9.4.6 INTERMEDIATE BUILDING VENTILATION SYSTEMS

Heating, cooling, ventilating and exhaust are provided for various Intermediate Building systems to the extent indicated to maintain ambient air temperatures in all areas between minimum and maximum levels suitable for personnel and equipment.

9.4.6.1 Design Bases

1. Furnish continuous outside air ventilation for the battery room system.

2. Safety Class 2b systems are designed for adequate physical separation and are so located as not to be affected by floods, weather, external missiles, jet impingement or pipe whip.

3. Equipment, motors and controls in Safety Class 2b systems are supplied from Class 1E power sources and have sufficient redundancy to satisfy the single failure criterion. 99-01

4. Provide, in the control room, for monitoring of process conditions and equipment status necessary for operation of the systems.

5. Provide for operation and manual control of the Intermediate Building ventilation systems as described in Sections 9.4.6.2.1, 9.4.6.2.2, 9.4.6.2.3, 9.4.6.2.4, 9.4.6.2.5, and 9.4.6.2.6.

6. Provide steam propagation barriers / components (SPB) in the equipment and floor drainage system required to maintain area environmental conditions for equipment qualification (EQ) purposes. SPB components may include orifice plates, check valves, or loop seals designed to segregate EQ zones to ensure that the conditions for which the equipment qualification were based on are not exceeded. Plant procedures specify the technical criteria for design, procurement, installation / maintenance and inspection of these QR components. RN 17-011

9.4.6.2 System Description

The system diagrams for the various intermediate building systems are as follows:

1. Figure 9.4-14, CRDM Switchgear Room Cooling System and Chiller Area Ventilation System.

2. Figure 9.4-15, ESF Switchgear Rooms and Speed Switch Rooms Cooling Systems.

3. Figure 9.4-16, Battery Room System and BOP Charger Area System.

4. Figure 9.4-17, Intermediate Building and Intermediate Building Pump Room Cooling System.

9.4.6.2.1 CRDM Switchgear Room Cooling System

The main components of this system include:

1. Two (2) 100% capacity air handling units, each consisting of roughing filters (20% efficiency on NBS dust), chilled water cooling coil, fan and motor section. Chilled water is provided by the Non-nuclear Safety Related Chilled Water System. See 9.4.7.2.12.

2. Ductwork to direct air from each air handling unit to the CRDM switchgear room and return air from this room to the air handling unit.

3. Instrumentation and control devices to perform the following functions:

    a. Measure the pressure drop across the roughing filter banks (local indication only).

    b. Cause an alarm in the control room upon detection of high smoke concentration in the CRDM switchgear room.

    c. Cause an alarm in the control room upon detection of high temperature in the supply duct of either air handling unit or upon detection of high room temperature.

    d. Automatically cycle the selected air handling unit in response to a room thermostat.

The CRDM switchgear room cooling system operates continuously during all normal operating and shutdown periods unless normal power is not available. The cooling coils are normally provided by the NNS Chilled Water System. In the event this system is unavailable, a back-up source from the Turbine Building switchgear rooms Chilled Water System can be used. The air handling units are normally powered from non-Class 1E buses. The air handling units are controlled from a local control station, the unit selected for automatic operation cycles in response to a room thermostat.

9.4.6.2.2 ESF Switchgear Rooms and Speed Switch Rooms Cooling Systems

The main components of these systems include:

1. One (1) 100% capacity air handling unit for each ESF switchgear room, one (1) 100% capacity air handling unit for the A and C speed switch room and A evacuation panel room, and 1 similar unit for the B and C speed switch room and B evacuation panel room. Each air handling unit consists of roughing filters (20% efficiency on NBS dust), chilled water cooling coil, and a fan and motor section. 00-01

Each ESF switchgear room air handling unit is also equipped with a standby direct expansion cooling coil. These non-safety related standby cooling coils provide ESF switchgear room cooling when the safety class chilled water train is not operating. 00-01

The standby cooling coil rejects heat to an air-cooled condensing unit located on the Intermediate Building roof.

2. Ductwork to direct air from each air handling unit to the ESF switchgear room and return air from this room to the air handling unit; ductwork to direct air from the A air handling unit to the A and C speed switch room and A evacuation panel room and return ductwork to the A air handling unit; similar ductwork to and from the B air handling unit and B and C speed switch room and B evacuation panel room.

3. Instrumentation and control devices to perform the following functions:

   a. Measure the pressure drop across the roughing filter banks (local indication only).

   b. Cause an alarm in the control room upon detection of high smoke concentration in the discharge ducts of any of the air handling units.

   c. Cause an alarm in the control room upon detection of high temperature in the discharge ducts of any of the air handling units and upon detection of high room temperature.

   d. Automatically cycle the selected air handling unit in response to a room thermostat.

   e. Automatically cycle the standby cooling coil system based on room temperature when the ESF switchgear is in a standby mode.

   f. Cause an alarm in the control room upon detection of air handling unit motor trip.

The air handling units cycle in response to a room thermostat under normal conditions to remove the heat generated by the ESF electrical equipment or by the speed switchgear. Under emergency conditions, the thermostatic control is bypassed and the air handling units start and operate continuously following receipt of a safety injection or loss of offsite power signal. Power is supplied to the air handling units from separated, independent Class 1E power sources. The air handling units can be manually started from the control room. The air handling units are located in separate equipment rooms in the Intermediate Building.

9.4.6.2.3 Battery Room Systems

The main components of these systems include:

1. Two (2) 100% capacity air handling units, each including roughing filter (20% efficiency on NBS dust), electric heating coil, face and bypass section, safety class chilled water cooling coil, fan, and motor section. 00-01

2. Two (2) 100% capacity exhaust air fans.

3. Air operated, spring opposed dampers to isolate the inactive battery room air handling unit and exhaust air fan.

4. One (1) 100% capacity air handling unit, including roughing filter (20% efficiency on NBS dust), chilled water cooling coil, fan, and motor section for the balance of plant charging space. Chilled water is provided by the Non-nuclear Safety Related Chilled Water System. See 9.4.7.2.12.

5. Instrumentation and control devices to perform the following functions:

    a. Measure the pressure drop across the roughing filter bank (local indication only).

    b. Cause an alarm in the control room upon detection of high smoke concentration in the discharge of either air handling unit or exhaust fan.

    c. Cause an alarm in the control room upon detection of high temperature in the discharge ducts from the air handling units or exhaust fans.

    d. Cause an alarm in the control room upon detection of high temperature in any of the battery or charger rooms.

    e. Indicate, in the control room, isolation damper position.

    f. Provide means for manually operating the air handling units and exhaust fans from the control room. The isolation dampers operate in conjunction with the fans. The battery air handling units start automatically at full cooling rate upon receipt of safety injection or loss of offsite power signals.

g. Automatically maintain battery room and charger room air temperature during normal operation by controlling the battery air handling unit heating coil, face and bypass damper, and the battery room reheat coils. During safety injection or loss of offsite power, the face and bypass damper moves to the full cooling position, isolating the heating coil from the system flow path. Heating may still be accomplished through the reheat coils if power is available. If battery room temperature becomes too low, the room will be isolated by means of an isolation damper in the room supply.

h. Indicate, in the control room, air handling unit fan operation.

i. Cause an alarm in the control room upon detection of air handling unit fan motor trip for the safety-related battery rooms supply and exhaust fans.

j. Indicate local temperature in each battery room.

The battery room system operates during all normal, shutdown, and emergency periods. Continuous system operation maintains suitable ambient temperatures and prevents the accumulation of battery gases in these areas. The battery room air handling units and exhaust fans are supplied by separated Class 1E power sources. The balance of plant charging space air handling unit is supplied from non-Class 1E power. The air handling units and exhaust air fans can be manually started and their operation monitored from the control room. The battery room air handling equipment is located in separated equipment rooms in the Intermediate Building.

9.4.6.2.4 Intermediate Building Ventilation System

The main components of this system include:

1. Two (2) 50% capacity supply fans for the Intermediate Building.

2. Two (2) 50% capacity exhaust fans for the Intermediate Building.

3. One (1) 100% capacity supply filter plenum for the Intermediate Building, including roughing filter (20% efficiency on NBS dust), and an electric heating coil.

4. Air operated, spring opposed dampers to isolate a supply or exhaust fan if it is de-energized and to regulate the quantities of outside, return, and relief air.

5. Ductwork from the supply fans to the Intermediate Building, back to the exhaust fans.

6. Instrumentation and control devices to perform the following functions:

   a. Measure the pressure drop across the roughing filter banks (local indication only).

   b. Cause an alarm in the control room upon detection of high smoke concentration in the fan discharges.

   c. Cause an alarm in the control room upon detection of high temperature in fan discharge ducts.

   d. Indicate, in the control room, fan isolation damper position.

   e. Provide means for manually operating the supply and exhaust fans from the control room. Supply fans are interlocked to prevent operation unless exhaust fans are operating. Isolation dampers are interlocked to operate with associated fans.

   f. Automatically maintain minimum supply air temperature by controlling the outside, return and relief dampers, and the Intermediate Building heating coil.

   g. Indicate, in the control room, supply and exhaust fan operation.

   h. Cause an alarm in the control room upon detection of fan motor trip.

The Intermediate Building ventilation system supply and exhaust fans operate continuously during all normal and shutdown periods. System operation maintains suitable ambient conditions and provides outside air ventilation. The units are supplied with normal power. The fans are operated from the control room.

9.4.6.2.5 Intermediate Building Pump Room Cooling Systems

The main components of these systems include:

1. Two (2) 100% capacity air handling units for each of the following locations: service water booster pump area and emergency feedwater pump area. Each air handling unit includes a roughing filter (20% efficiency on NBS dust), safety class chilled water cooling coil, fan, and motor section. 00-01

2. Ductwork from the pump room air handling units to the pump areas.

3. Instrumentation and control devices to perform the following functions:

    a. Measure the pressure drop across the roughing filter banks (local indication only).

    b. Cause an alarm in the control room upon detection of high smoke concentration in air handling unit discharges.

    c. Cause an alarm in the control room upon detection of high temperature in air handling unit discharge ducts.

    d. Cause an alarm in the control room upon detection of high temperature in the pump room areas.

    e. Provide means for manually operating the air handling units from the control room.

    f. Indicate, in the control room, air handling unit operation.

    g. Cause an alarm in the control room upon detection of air handling unit motor trip.

    h. Provide a means of tripping the air handling unit fans on detection of high ambient temperature in the pump room area.

The pump room air handling units start automatically, provided a high ambient temperature condition does not exist in the area, with their respective pump. The air handling units remove heat generated due to normal equipment operation in the area. Upon detection of high ambient temperature conditions in the area, which may be caused by an HELB in the IB-412' area, fan operation is prohibited until area temperatures return to design parameter operational levels. Air handling units are supplied by separated class 1E power sources and are located in separate equipment rooms in the Intermediate Building.

9.4.6.2.6 Water Chiller Area Ventilating System

The main components of this system include:

1. One (1) ventilating fan arranged to supply, relieve, and return outside ventilating air.

2. One (1) duct mounted heating coil.

3. Ductwork with control dampers and fire dampers arranged to supply, relieve, and return air as required.

4. Instrumentation and control devices to perform the following functions:

   a. Cause an alarm in the control room upon detection of high smoke concentration in the return air duct.

   b. Cause an alarm in the control room upon detection of high temperature in the fan discharge.

   c. Automatically control the outside and return dampers and the heating coil using a temperature controller which senses return air temperature.

   d. Indicate, locally, fan operation.

   e. Cause an alarm in the control room upon detection of fan motor trip.

The system operates continuously after manual start. System equipment is supplied from a non-Class 1E power source.

9.4.6.3 Safety Evaluation

Since the Intermediate Building ventilation systems are redundant, loss of 1 of the air handling units or fans does not prevent system function. For the ESF switchgear rooms cooling systems, 1 air handling unit serves the A channel ESF switchgear and a second, separate air handling unit serves the B channel ESF switchgear.

Safety Class 2b equipment is located in physically separated equipment rooms accessible for maintenance and not subject to floods, weather, external missiles, jet impingement or pipe whip. Safety Class 2b equipment is supplied by separated Class 1E power supplies. Units are administratively controlled from the control room. ESF switchgear rooms air handling units, speed switchgear rooms air handling units and CRDM switchgear room air handling units are cycled by room thermostats. Upon receipt of a safety injection or loss of offsite power signal, the ESF switchgear rooms air handling units and speed switchgear rooms air handling units are automatically started and operated continuously. Pump room air handling units are operated automatically with their respective pump. Operation of units is monitored from, and alarms indicating abnormal conditions are provided in, the control room. Assurance of system operation capability is further provided by preoperational and post operational test procedures.

9.4.6.4 Inspection and Testing Requirements

The Intermediate Building ventilation systems are subjected to preoperational test procedures to verify proper wiring and control hookup, system "in-place" integrity and leak tightness, proper function of system components and control devices, and to establish system design air flow rates. To ensure a continued state of readiness of the Intermediate Building ventilation systems after completion of the preoperational tests, the following inspection, maintenance, and test procedures are performed:

1. CRDM Switchgear Room Cooling System

   a. Record filter pressure drops.

   b. Verify function of dampers or control devices necessary for monitoring or component isolation or changeover.

   c. Bearing lubrication.

   d. Switch components from standby to operating mode.

2. ESF Switchgear Rooms Cooling Systems

   ESF switchgear rooms cooling systems inspection, maintenance and test requirements are the same as CRDM switchgear room cooling system requirements a. through c.

3. Battery Room System

   Battery room system inspection, maintenance and test requirements are the same as CRDM switchgear room cooling system requirements a. through d.

4. Intermediate Building Ventilation System

   Inspection, maintenance and test requirements for this system are the same as CRDM switchgear room cooling system requirements a. through c.

5. Intermediate Building Pump Cooling Systems

   Inspection, maintenance and test requirements for these systems are the same as CRDM switchgear room cooling system requirements a. through d.

6. Speed Switchgear Rooms Cooling Systems

   Inspection, maintenance and test requirements for these systems are the same as CRDM switchgear room cooling system requirements a. through d.

9.4.7 MISCELLANEOUS BUILDING VENTILATION AND COOLING SYSTEMS

Heating, cooling, ventilation, exhaust, heat rejection and generation of mechanically chilled water are provided by various systems to the extent indicated in the following sections to maintain ambient air temperatures in areas discussed between minimum and maximum levels suitable for personnel and equipment.

9.4.7.1 Design Bases

The miscellaneous building ventilation and cooling systems are designed in accordance with the following criteria, where applicable:

1. Equipment, motors, and controls in Safety Class 2b systems are supplied from Class 1E power sources and have redundancy as required to satisfy the single failure criterion of 10 CFR 50, Appendix A.

2. Instrumentation and controls are provided to monitor normal operation and detect abnormal conditions, such as high or low temperatures, low pressure, smoke, equipment vibration and motor trip.

3. Provide outside air ventilation to remove heat developed by motors and electrical equipment.

4. Provide a system to generate and distribute mechanically chilled water to safety and non-nuclear safety class equipment.

5. Provide a heat rejection system for the Reactor Building cooling system.

6. Provide a comfort cooling system for the Service Building.

7. Provide for operation and manual control of these systems from the control room. Also, provide for automatic starting of the Diesel Generator Building ventilation system when the diesel generator is started and for automatically starting the Service Water Pumphouse ventilation system.

99-01

9.4.7.2 System Description

The system diagrams for the miscellaneous building ventilation and cooling systems are as follows:

1. Figure 9.4-18, Diesel Generator Building Ventilation System.

2. Figure 9.4-19, Service Water Pumphouse Ventilation System.

3. Figures 9.4-20 and 9.4-21, Service Building Ventilation System.

4. Figures 9.4-22 through 9.4-24, Chilled Water System.

5. Figure 9.4-25, Industrial Cooling Water System.

6. Figure 9.4-26, Substation Relay House System.

7. Figure 9.4-26a, Penetration Room Ventilation System.

8. Figure 9.4-26b, Miscellaneous Pump Room Systems and Lube Oil Room System.

9. Figure 9.4-26c, Water Treating Area Laboratory Heating and Cooling System.

10. Figure 9.4-26d, Unit 1 Relay House HVAC.

11. Figure 9.4-32, CRDM Cooling Water System.

12. Figure 9.4-33, Chilled Water - Turbine Building Switchgear Rooms.

13. Figure 9.4-34, Non-Nuclear Safety Chilled Water System.

RN 12-001

14. Figure 9.4-35, SH. 1, EB HVAC - Electrical and Battery Room

15. Figure 9.4-35, SH. 2, EB HVAC - Diesel Generator 1 Room

16. Figure 9.4-36, AEB HVAC - Diesel Generator 2 Room

RN 13-029

Design and performance data are provided on these figures.

9.4.7.2.1 Diesel Generator Building Ventilation System

The main components of this system for each diesel room include:

1. Two (2) 50% capacity ventilation fans to supply outside air to the diesel generator room, the diesel generator electric equipment room, and the diesel generator cable-pipe-basement area.

2. Air operated, spring opposed dampers with damper position limit switches to isolate the ventilation supply fans when not in use.

3. Ductwork to connect the two supply fans and distribute supply air to the various diesel room areas.

4. Instrumentation and control devices to perform the following functions:

    a. Cause an alarm in the control room upon detection of high smoke concentration in the discharge of each fan.

b. Cause an alarm in the control room upon detection of high temperature in the discharge of each fan.

c. Provide means for manually operating the supply fans from the control room. The supply fans are interlocked with the damper limit switches to prevent fan operation if dampers are closed.

d. Provide means for automatically cycling the supply fans under control of room thermostats located in the diesel generator rooms, and diesel generator electric equipment rooms. Cycling in this manner maintains acceptable temperatures when diesel generators are not operating.

e. Provide means for automatically starting each supply fan if the associated diesel generator is started. Associated supply fans operate continuously while the diesel generator is in operation.

f. Indicate, in the control room, supply air fan operating status.

g. Cause an alarm in the control room upon detection of fan motor trip.

The fans in this system cycle and associated dampers open and close in response to room thermostats located in the diesel generator rooms, and diesel generator electric equipment rooms when the diesel generators are not operating. Both fans associated with a diesel room start automatically and operate continuously whenever the diesel generator in that room operates. Ventilation air is drawn through roof openings shielded from external tornado missiles and forced into the diesel room by the fans. The ventilation air is ducted to various areas of the diesel room, diesel generator electric equipment room and cable-pipe areas under the diesel generator. Ventilation air is relieved from the cable-pipe areas and electric equipment room to the diesel room and through the exhaust silencer space to the outside. The relief air is vented to the outside through roof openings which are also shielded from external tornado missiles. The fans are powered from separated Class 1E power sources. The fans are manually operated from the control room or operate automatically as previously noted. System operation is monitored from the control room. The fans are located on the west end of the Diesel Generator Building.

9.4.7.2.2 Service Water Pumphouse Ventilation System

The main components of this system include:

1. Two (2) 100% capacity ventilation supply fans to provide outside air to various areas of the Service Water Pumphouse.

2. Air operated, spring opposed dampers to isolate the return air path to the ventilation supply fans and to regulate the quantities of outside, return and relief air. Gravity dampers are provided at the discharge of each supply fan.

3. Fire dampers are located in the switchgear and pump rooms supply and return ducts.

4. Eight electric unit heaters are provided to maintain minimum ambient temperatures during shutdown periods.

5. Ductwork is provided for supply, return and relief of ventilation air in service water pump areas and related motor control center and electrical rooms.

6. Instrumentation and control devices to perform the following functions:

   a. Cause an alarm in the control room upon detection of high smoke concentration in the return duct to each fan.

   b. Cause an alarm in the control room upon detection of high temperature in the discharge duct of each ventilation supply fan.

   c. Indicate, in the control room, open and closed positions of ventilation supply fan isolation, outside, return and relief air dampers.

   d. Cause an alarm in the control room upon detection of excess vibration of the ventilation supply fans.

   e. Indicate, in the control room, the air flow rate in the outside air supply ducts to the ventilation supply fans.

   f. Automatically control outside, return and relief air damper position by means of a return air temperature controller.

   g. Provide means for manually operating the ventilation system fans from the control room. These fans are interlocked with the associated inlet isolation dampers.

   h. Provide an outside/return air manual control station in the control room.

   i. Provide means for automatically starting the ventilation air supply fans upon receipt of a safety injection or loss of offsite power signal and bypassing the discharge temperature controller upon receipt of a safety injection signal.

   j. Indicate, in the control room, high and low ambient temperatures in the pump/screen room and in the switchgear rooms.

   k. Indicate, in the control room, ventilation supply fan operation.

   l. Cause an alarm in the control room upon detection of ventilation supply fan motor trip.

Either of the 2 supply fans operates continuously during normal operating periods. Both fans start automatically following receipt of a safety injection or loss of offsite power signal. Outside, return and relief air damper positions are automatically controlled by a return air temperature controller. Alternatively, position of these dampers can be manually controlled by a hand control station in the control room. The fans are powered from separate Class 1E power sources. The fans are manually started from the control room or are automatically started as previously noted. The air handling equipment is located in a shielded fan room above the equipment areas. Ductwork in the equipment areas is fireproofed. Fireproofing is accomplished by "boxing-in" the duct. System operation is monitored from the control room.

9.4.7.2.3 Service Building Ventilation System

Air conditioning, heating, cooling, and ventilation systems are provided for the Service Building areas to satisfy the following general requirements: RN 03-009

1. To maintain ambient air temperatures in all areas as required for the comfort and safety of personnel.

9.4.7.2.4 Safety Class Chilled Water System RN 11-016 00-01

The main components of this system include: RN 11-018

1. Two (2) 100% capacity centrifugal type and one (1) 100% capacity screw type, electric motor driven water chilling machines.

2. Three (3) 100% capacity chilled water pumps.

3. Chilled water cooling coils for the following areas:

    a. Charging pump rooms.

    b. Residual heat removal/Reactor Building spray pump rooms.

    c. Emergency feedwater pump areas.

    d. Service water booster pump rooms.

    e. ESF switchgear rooms.

    f. Control room/Technical Support Center.

    g. Relay room/Technical Support Equipment Room.

    h. Auxiliary Building motor control center cooling units.

    i. Battery Room.

    j. Speed Switch Room.

4. Piping supply and return mains with expansion tanks, chemical feed, systems and provisions for balancing, manual and automatic isolation of portions of the system.

5. Instrumentation and control devices to perform the following functions:

   a. Cause an alarm in the control room upon detection of low chilled water flow.

   b. Indicate, in the control room, which chiller and chilled water pump are energized.

   c. Cause an alarm in the control room upon detection of chilled water pump motor trip.

   d. Cause an alarm in the control room upon detection of low chilled water pressure in pipe mains.

   e. Indicate, in the control room, chilled water temperature in the supply pipe mains and cause an alarm in the control room upon detection of high or low chilled water temperature.

   f. Indicate, in the control room, chilled water temperature in the discharge of the chiller and cause an alarm in the control room upon detection of high chilled water temperature.

   g. Cause an alarm in the control room upon detection of loss of chiller condenser water flow.

   h. Indicate water temperature locally in the pipe supply and return mains at the inlet and outlet of each cooling coil.

   i. Provide thermal wells for local testing in the supply and return mains and in the discharge of the A and B chillers.

   j. Indicate water pressure locally at the suction and discharge of each pump.

   k. Cause an alarm in the control room upon detection of low Chilled Water System water level.

   l. Provide interlocks requiring chilled water pump operation before the chiller can be started.

   m. Provide means to automatically start chilled water pumps and chillers following receipt of a safety injection or loss of offsite power signal.

   n. Cause an alarm in the control room upon chiller trip. RN 11-018

Continuous operation of 1 of the 3 chillers and chilled water pumps is required during normal and emergency periods to provide 45°F water to the chilled water coils listed in Section 9.4.7.2.4, item 3. Use of 3 chillers and 3 chilled water pumps permits one unit

to undergo extended maintenance, 1 unit to operate, and the remaining unit to be a nonrunning chiller and pump set. If all 3 chiller and pump sets are available, 1 is designated as a spare and its breaker(s) is racked out. Continuous chilled water flow is maintained through chilled water coils in the operating loop during normal plant operation. The Chilled Water System is a closed system with redundant supply and return mains. Chiller condenser cooling water is supplied by the Service Water System. Equipment is supplied from separated Class 1E power sources. The chillers and chilled water pumps may be started from the control room. All chillers may also be started locally. Local control of the "B" and "C" aligned "B" chilled water pumps only is available. This allows the "B" train of the Chilled Water System to be available in the event of a postulated exposure fire where "B" train is the selected train for plant shutdown. The operation and status of Chilled Water System components are monitored and alarms are annunciated in the control room. The chillers and chilled water pumps are located in 3 separated, concrete shielded, equipment spaces in the Intermediate Building.

9.4.7.2.5 Industrial Cooling Water System

The Industrial Cooling Water System has the ability to reject heat to either of two heat sinks, the industrial coolers (Wet-surface Air Cooler) or the RB Chiller Loop (via the industrial cooling heat exchangers). The main components of this system include: RN 16-025 17-010

1. Two (2) 50% capacity industrial coolers, each consisting of closed loop, sectionalized cooling water coils, an external spray system and sump, sump heaters, makeup and bleed off devices, 4 spray pumps (2 normal-2 standby), and 8 fans. RN 17-010

2. Two (2) 100% capacity industrial cooling water pumps to circulate water in the closed cooling loop from the industrial cooler (or industrial cooling heat exchangers) to air dryers, air compressors, thermal regenerative chiller condenser, and the Reactor Building cooling units and back to the industrial cooler (or industrial cooling heat exchangers). RN 16-025 17-010

3. Piping supply and return mains with connections to the coils and heat exchangers noted in item 2, above. An expansion tank, chemical feed tank, and provisions for fill, drain, balancing, and isolation of system components are supplied. RN 16-025

4. Instrumentation and control devices for the Industrial Cooling Water System and the industrial coolers perform the following functions: RN 16-025 17-010

   a. Cause an alarm in the control room upon detection of loss of industrial cooling water flow.

   b. Indicate industrial cooling water flow locally.

   c. Indicate, in the control room, which industrial cooling water pump is energized.

d. Cause an alarm in the control room upon detection of industrial cooling water pump motor trip.

e. Cause an alarm in the control room upon detection of high industrial cooling water temperature.

f. Cause an alarm in the control room upon detection of low water level in the industrial cooler expansion tank.

g. Provide means to automatically reset the required discharge water temperature in response to Reactor Building ambient temperature changes.

h. Indicate, locally, water temperature entering and leaving all components served by the Industrial Cooling Water System and water temperature entering and leaving the industrial coolers.

i. Indicate, in the control room, water temperature entering the Industrial Cooling System at the discharge of the industrial cooling water pumps. 98-01

j. Locally indicate water pressure at the suction and discharge of the industrial cooler pumps and at the inlet and discharge of each industrial cooler. RN 16-025

k. Input to the plant computer for Industrial Cooling Water Heat Exchanger inlet and outlet temperatures.

5. The RB chiller loop of the Industrial Cooling Water system contains:

a. Two (2) 100% capacity, variable flow chiller loop water pumps to circulate water in the closed cooling loop from the RB chillers to the industrial cooling heat exchanger and back to the RB chillers.

b. Piping supply and return mains with connections to the heat exchangers noted in item 5a, above. An expansion tank, chemical feed tank, and provisions for fill, drain and isolation of system components are supplied. RN 17-010

c. An Industrial Cooling Pump House (ICPH) which houses the pumps with variable frequency drives, chemical feed tank and chiller control panel.

d. Instrumentation and control devices to perform the following functions:

i. Cause a common trouble alarm in the control room upon detection of either out of range water temperatures and flows, expansion tank level high/low, chiller failure or chiller pump failure.

ii. Industrial cooling supply water temperature to the Reactor Building is automatically controlled by the RB chiller loop.

iii. Provide local indication of differential pressure across Industrial Cooling Heat Exchangers.

iv. Input to the plant computer for Industrial Cooling Heat Exchanger chiller water inlet and outlet temperatures.

v. Input to plant computer for chiller loop expansion reservoir level.

vi. Provide local indication of water pressure at the suction and discharge of the chiller loop pumps.

RN 16-025

Operation of one industrial cooling water pump is required during all normal, shutdown and Reactor Building leak rate test periods to circulate water through the closed system. During operation, heat is absorbed in the various heat exchangers and rejected to the outside via industrial coolers or via plate heat exchanger(s) and air-cooled chillers. The water supply and return main flows to the Reactor Building cooling units are automatically diverted from the industrial cooler or industrial cooling heat exchanger(s) to the Service Water System upon receipt of a safety injection or loss of offsite power signal. The industrial cooler fans and spray pumps are automatically controlled to maintain discharge water temperature. The RB chillers and chiller loop pumps are automatically controlled by RB chilled water temperature determined by ITK09205. RB Chiller loop flow is automatically controlled with variable frequency drive pumps. The required discharge water temperature is manually set to maintain a constant Reactor Building ambient temperature. Makeup water to the industrial cooling loop and RB chiller loop is supplied from the filtered water and demineralized water respectively. Industrial cooling water circulation pumps are manually controlled from the control room. Equipment is supplied with normal power.

RN 16-025

RN 17-010

RN 16-025

RN 12-001

9.4.7.2.6 Substation Relay House and Unit 1 Relay House Cooling Systems

The main components of the Substation Relay House system include:

1. One (1) 100% capacity self-contained cooling unit consisting of casing, roughing filters, direct expansion cooling coils, fan and motor section and controls.

2. One (1) 100% capacity air cooled condensing unit consisting of refrigerant compressor, condensing coil, condenser fan and motor section and controls.

3. Ductwork system with outlets, balancing devices and electrically operated outside air dampers.

4. Refrigerant piping system between condensing unit and cooling unit.

5. Two (2) 50% capacity, wall mounted, battery room exhaust fans. 00-01

6. Five (5) electric unit heaters for the relay room and storage areas.

The substation relay house cooling unit operates continuously after local manual start and is subsequently controlled automatically by self-contained equipment controls. Equipment is supplied from normal power supplies. No provisions are made for power supplied from an emergency source. The air handling unit is located along the east end of the substation relay house. The condensing unit is pad mounted directly outside.

The main components of the Unit 1 Relay House Cooling system include:

1. Air conditioning units are four (4) 33% capacity units. Each unit is a self contained unit with air conditioning and heating equipment. Each unit has its own wall mounted thermostat. Units have built in economizer with exhaust damper. The units are 5 ton units with 6kW heater.

2. Each battery room has two (2) 100% exhaust fans. One fan is running while the other is in standby. Loss of flow to the primary fan automatically starts the standby fan. RN 12-001

   The Unit 1 relay house cooling unit operates continuously after local manual start and is subsequently controlled automatically by self-contained equipment controls. Three (3) of the four (4) air conditioning units run during normal operation. Equipment is supplied from normal power supplies. No provisions are made for power supplied from an emergency source.

9.4.7.2.7 Penetration Access Areas Ventilation System

The main components of this system include:

1. Two (2) 100% capacity exhaust fans.

2. Two (2) 50% capacity ventilation supply air fans for each of the following locations:

   a. Elevation 412’, east penetration area.

   b. Elevation 412’, west penetration area.

   c. Elevation 436’, east penetration area.

   d. Elevation 436’, west penetration area.

3. Supply ductwork with outlets, control dampers and outside air intake provisions. Exhaust ductwork with control dampers and make-up air intake provisions.

4. Instrumentation and control devices to perform the following functions:

   a. Alarm in the control room upon detection of high concentrations of smoke in each penetration area, upon a fan motor trip, upon excessive exhaust fan vibration, and upon low exhaust air flow.

   b. Manual operation of supply and exhaust fans from remote control stations. The fans are also interlocked with their respective isolation dampers which open when their respective fan runs and vice versa.

   c. Automatically control outside and return air dampers in response to a room thermostat.

d. Indicate fan operation at each switch.

e. Automatically control the exhaust fan make-up damper in response to a flow monitor covered in (a) above.

The fans operate continuously after manual start from the local control stations. The amount of outside air introduced is controlled automatically by a room thermostat. Exhaust air is discharged to outdoors through the plant vent. The fans are powered from a non-Class 1E power source.

9.4.7.2.8 Miscellaneous Pump Room Systems and Lube Oil Room System

The main components of these systems include:

1. Two (2) exhaust fans and 2 motorized inlet openings for the motor driven fire service pump room.

2. One (1) exhaust fan and motorized inlet opening for the diesel driven fire service pump room.

3. One (1) exhaust fan and motorized inlet opening for the screen wash pump room.

4. Two (2) wall mounted exhaust fans each equipped with a gravity operated backdraft damper and a temperature controlled fire damper and a common room inlet equipped with a temperature controlled fire damper. (For the Turbine Lube Oil Treatment Room.) 00-01

5. Electric unit heaters for the following locations:

   a. Motor driven fire service pump room, 2 units.

   b. Diesel driven fire service pump room, 1 unit.

   c. Screen wash pump room, 1 unit.

6. Instrumentation and control devices to perform the following functions:

   a. Provide local control of each fan.

   b. Provide thermostat control for each of the exhaust fans noted in items 1 through 4, above.

   c. Provide interlocks so that the fans do not operate unless the inlet louver and fan isolation dampers are open. (Pump room ventilation systems only.) 00-01

   d. Provide local indication of fan operation.

e. Provide control room indication of fan motor trip in the turbine lube oil treatment room.

f. Provide thermostat control of the electric unit heaters described in Section 5 above. 00-01

Roof ventilators and dampers in the pump room ventilation system operate automatically in response to thermostats after manual start. Unit heaters, as described in Section 5 above, operate in response to integral thermostats. Equipment is powered from non-Class 1E power sources. 00-01

9.4.7.2.9 Water Treating Area Laboratory Heating and Cooling System

The main components of this system include:

1. One (1) package type heating and cooling unit, including direct expansion type air handling unit with electric heating coil and roughing filter and refrigerant condensing unit.

2. Two (2) laboratory hood exhaust fans and a chemical storage area exhaust fan.

3. Twelve (12) electric unit heaters in the chemical storage and general floor areas.

4. Ductwork connecting the air handling unit with the sample room and the water treating laboratory and for supply and exhaust of the laboratory hoods.

5. Instrumentation and control devices to perform the following functions:

   a. Automatically operate the condensing unit and the air handling unit heating coil in response to a room thermostat.

   b. Automatically place the outside, return and relief dampers under control of the outside and return mixture temperature controller or at a fixed minimum position in accordance with outside temperature.

   c. Automatically prevent or permit the condensing unit to operate in accordance with outside temperature.

   d. Control electric unit heaters with integral thermostats.

   e. Automatically close hood inlet dampers when the entering air is below a set temperature.

The air handling unit operates continuously. The laboratory hood and chemical storage area exhaust fans are operated as required from local control stations. System components are supplied from non-Class 1E power sources.

9.4.7.2.10 CRDM Cooling Water System

The main components of this system include:

1. One (1) CRDM cooler rack assembly which is an air to water heat exchanger.

2. One (1) CRDM cooling water industrial cooler, including 2 electric heaters, 8 forced convection fans, and 4 circulation pumps.

3. One (1) expansion tank to control thermally induced water volume changes.

4. Two (2) 100% circulating water pumps, including a bypass line with a chemical feed tank.

5. Four (4)motor operated containment isolation valves, including 2 check valves on bypass lines on the Reactor Building Side.

The system is designed to remove heat from the containment air used to cool the Control Rod Drive Mechanism (CRDM) and dissipate this heat to the atmosphere via the Industrial Cooler.

The system can operate continuously while the plant is in operation. System components are powered from non-Class 1E power sources, except for the motor operators on the containment isolation valves, which are supplied from the Class 1E power sources.

9.4.7.2.11 Turbine Building Switchgear Rooms Chilled Water System

The main components of this system include:

1. One (1) air-cooled, electric motor drive, reciprocating water chiller.

2. One (1) primary water pump.

3. Two (2) 100% capacity secondary water pumps.

4. Chilled water piping system including a compression tank, an air separator, a chemical feed tank, and valves.

5. Chilled Water Coils - 1 coil bank consisting of two (2) sections in each of 2 redundant Turbine Building switchgear rooms air handling units. Each section has 2 connections. 00-01

6. Instrumentation and control devices to perform the following functions: RN 16-015

   a. Chiller is equipped with a unit mounted starter and microprocessor based control panel with local controls, status panel, and diagnostic capability. When

temperature or pressure is reported out of range by local sensors, a diagnostic is sent to the unit control panel. Chiller is interlocked with the primary pump; therefore the energized chiller will not start unless the primary pump is running.

RN 16-015

b. The primary pump is started by a remote manual switch. The primary pump is interlocked with the main power for the chiller; therefore the pump will not turn on without power running to the chiller.

c. The secondary pumps are redundant and each is wired to run only with its respective air handling unit. The active pump is controlled by 1 of 3 parallel-wired room thermostats.

d. Indicate locally the level of water in the compression tank and alarm of low level in the control.

e. Alarm in the control room of low water flow.

f. Indicate locally the temperature of water entering and leaving the chiller and provide a computer high temperature alarm and CRT display in the control room of water leaving the chiller.

g. Indicate locally the pressure of water entering and leaving each pump.

Under normal conditions, the primary pump continuously circulates water in the primary pipe loop. This water is maintained at 45°F by the chiller which loads/unloads and cycles automatically under its self contained controls. The secondary pump circulates water between the primary loop and the chilled water coils identified in Section 9.4.4.2.1, subitem 4. It cycles upon demand of room thermostats.

Additionally, this system can provide chilled water to the CRDM Switchgear Room cooling coils via a booster pump in the event that chilled water is unavailable to these coils. This system can be provided chilled water from the non-nuclear safety related Chilled Water System. The system is non-nuclear safety class.

9.4.7.2.12 Non-nuclear Safety Related Chilled Water System

The main components of this system include:

1. One (1) air-cooled, electric motor driven reciprocating water chiller.

2. Two (2) 100% capacity chilled water circulating pumps.

3. One (1) chilled water booster pump.

4. Chilled water piping system including an atmospheric expansion tank, provisions for chemical sample and feed, and provisions for balancing the system.

5. Chilled water cooling coils for the following areas:

    a. CRDM Switchgear Room.

    b. Controlled Access Area.

    c. SAS/Computer Room.

    d. Computer Room.

    e. BOP Charger Area.

6. Instrumentation and control devices to perform the following functions:

    a. Cause an alarm at a local panel and a common trouble alarm in the control room upon detection of either low chilled water flow, high chilled water temperature, or low expansion tank level.

    b. Provide local indication of system flow.

    c. Provide interlocks which shut the chiller down on low system flow.

    d. Indicate water temperature locally at the pipe supply and return headers and at the inlet and outlet of each cooling coil.

    e. Provide thermowells for local testing in the supply and return headers at the chiller.

    f. Indicate water pressure locally at the suction and discharge of each pump.

    g. Provide the means for determining pressure drop across each system cooling coil.

h. Provide local indication of expansion tank level.

i. Provide a remote means for filling the system. 02-01

j. Provide a local panel at the fill station to indicate "Normal," "Low," and "Fill Complete" expansion tank level with status lights.

Under normal conditions, the system provides chilled water via redundant circulating pumps to the cooling coils listed in Section 9.4.1.2.3, 9.4.1.2.4, 9.4.1.2.6, 9.4.6.2.1, and 9.4.6.2.3. The chiller loads/unloads and cycles automatically to maintain chilled water temperature at 45°F. This system can be aligned to provide a backup source of chilled water to the Turbine Building Switchgear Rooms cooling coils. In the event that chilled water is unavailable to the CRDM Switchgear Room cooling coils, the booster pump can be aligned to the Turbine Building Switchgear Rooms Chilled Water System to provide a backup source of cooling to the CRDM Switchgear Room.

9.4.7.2.13 ISFSI Electrical Building (EB) HVAC System

The main components of the system include:

1. Three (3) 50% capacity wall mounted HVAC units.

2. Two (2) 100% capacity Battery Room wall mounted ventilation fans.

3. One (1) 100% capacity EB Diesel Generator Room wall mounted ventilation fan.

4. One (1) 100% EB Diesel Generator Room Cooling wall mounted supply fan.

5. One (1) 100% EB Diesel Generator Room Cooling wall mounted exhaust fan. RN 13-029

6. One (1) 100% EB Diesel Generator Radiator Cooling wall mounted supply fan.

7. One (1) 100% EB Diesel Generator Engine Driven Radiator Cooling exhaust fan.

The EB HVAC units condition the air in the Electrical Room and Battery Room in order to maintain the UPS batteries within the normal operating temperature range. Ventilation air is supplied through the lead HVAC unit into the Electrical Room, drawn through a fire damper in the Battery Room wall into the Battery Room and then exhausted through a wall mounted exhaust fan to remove any hydrogen generated by the batteries and cool or heat the battery room air. The primary ventilation fan operates at all times. If air flow is lost through the primary ventilation fan, an alarm is generated on the Main Control Board and local panels XPN5386 and XPN5387 and the secondary fan is started automatically.

Ventilation air is drawn in through a gravity operated supply damper in the exterior wall of the EB Diesel Generator Room and exhausted by the EB Diesel Generator Room Ventilation fan exhaust fan to remove any diesel fumes released into the room. If air flow is lost through the ventilation fan an alarm is generated on the Main Control Board and local panels XPN5386 and XPN5387 and the EB Diesel Generator Room Cooling supply and exhaust fans will be started automatically. The EB Diesel Generator Radiator Cooling Supply fan is started automatically when the EB Diesel Generator is started along with the EB Diesel Generator Engine Driven Radiator Cooling exhaust fan. If room temperatures continue to increase above 80°F the Diesel Generator Room Cooling supply and exhaust fans will start to provide additional room cooling. Reference FSAR Figures 9.4-35, Sheets 1 and 2.

9.4.7.2.14 ISFSI Auxiliary Electrical Building (AEB) HVAC System

The main components of the system include:

1. One (1) 100% capacity AEB Diesel Generator Room wall mounted ventilation fan.

2. Two (2) 50% capacity AEB Diesel Generator Room Cooling wall mounted supply fans. RN 13-029

3. Two (2) 50% capacity AEB Diesel Generator Radiator Cooling wall mounted supply fans.

4. One (1) 100% capacity AEB Diesel Generator Room Cooling wall mounted exhaust fan.

5. One (1) 100% AEB Diesel Generator Engine Driven Radiator Cooling exhaust fan.

Ventilation air is drawn in through a gravity operated supply damper in the exterior wall of the AEB Diesel Generator Room and exhausted by the AEB Diesel Generator Room Ventilation fan exhaust fan to remove any diesel fumes released into the room. If air flow is lost through the ventilation fan an alarm is generated on the Main Control Board and local panels XPN5386 and XPN5387 and the AEB Diesel Generator Room Cooling supply and exhaust fans will be started automatically. The Diesel Generator Radiator Cooling Supply fan is started automatically when the AEB Diesel Generator is started along with the AEB Diesel Generator Engine Driven Radiator Cooling exhaust fan. If room temperatures continue to increase above 80°F the AEB Diesel Generator Room Cooling supply and exhaust fans will start to provide additional room cooling. Reference FSAR Figure 9.4-36.

9.4.7.3 Safety Evaluation

The Service Building ventilation system, Industrial Cooling Water System, substation relay house and Unit 1 relay house cooling systems, penetration access areas ventilation system, miscellaneous pump room systems and lube oil room systems, water treating area laboratory heating and cooling system, and Turbine Building switchgear rooms chilled water system perform no safety function. The CRDM Cooling Water System performs no safety function except for the containment isolation valves where motor operators are supplied by Class 1E power supplies. They do provide acceptable temperature levels in the various buildings. RN 12-001

Additionally, the substation battery room exhaust fan in both the substation relay house and the Unit 1 relay house cooling system prevents the occurrence of any appreciable hydrogen concentration in the battery room. RN 12-001

The Diesel Generator Building ventilation system, Service Water Pumphouse ventilation system, and safety class Chilled Water System do perform safety functions since total loss of the heat removal capability of any one of these systems could produce conditions affecting the safety of the plant. These systems are designed with redundant equipment and piping systems and are so arranged, serviced, and maintained such that complete loss of system function or system cooling is highly unlikely. Each of the safety class systems is located in equipment rooms accessible for maintenance but not subject to floods, weather, external missiles, main steam line break effects, jet impingement, or pipe whip. Each is supplied by separated Class 1E power supplies. The safety class systems are administratively controlled from the control room. Operation of the Diesel Generator Building ventilation system is automatically initiated by diesel generation. Operation of the Service Water Pumphouse ventilation system and the Chilled Water System are automatically initiated by receipt of a safety injection or loss of offsite power signal. Safety class systems are monitored and alarms are annunciated in the control room. 00-01

9.4.7.4 Inspection and Testing Requirements

The miscellaneous building ventilation and cooling systems are subjected to preoperational testing to verify proper wiring and control hookup, system "in-place" integrity and leak tightness, proper function of system components and control devices, and to establish system design air and water flow rates. To ensure a continued state of readiness of the miscellaneous building ventilation and cooling systems after completion of the preoperational tests, the following inspection, maintenance, and test procedures are performed:

a. Verify function of dampers or control devices necessary for monitoring or component isolation or changeover from normal to emergency mode.

b. Bearing lubrication.

c. Switch components from standby to operating mode.

9.4.8 REACTOR BUILDING COOLING AND FILTERING SYSTEMS

Under normal operating conditions, continuous circulation and cooling of the Reactor Building air is required to maintain the ambient air temperature at a suitable level for continuous operation of equipment within the building.

Under shutdown conditions, heating and cooling of the Reactor Building is provided by the ventilation system as required.

Cleanup of the Reactor Building atmosphere is required before purging to minimize the release of radioactivity to the environment. Purging may be utilized to maintain a suitable environment for personnel prior to entering the Reactor Building for maintenance or refueling operations.

During a post accident period, the Reactor Building cooling system assists other heat removal systems in their heat removal function.

9.4.8.1 Design Bases

The ventilating, cooling and filtering systems of the Reactor Building are designed to perform the following functions:

1. Satisfy the general requirements stated in Section 9.4.8.

2. Maintain an average Reactor Building air temperature below a maximum of 120°F during normal power operation as assumed in the accident analyses and below 100°F during refueling operations for personnel comfort and safety. 98-01

3. Maintain an average Reactor Building air temperature above 60°F during shutdown conditions for personnel comfort and safety. 98-01

4. Provide post accident heat removal capability to assist in depressurizing the Reactor Building following a LOCA or main steam line rupture. See Section 6.2.2 for a discussion of the engineered safety features functions of the Reactor Building cooling system.

5. Provide forced air cooling systems in areas of high local heat release within the Reactor Building. These systems limit temperatures of the adjacent concrete to a maximum of 150°F and provide a suitable ambient temperature for instrumentation and equipment. These areas include the annular spaces between the reactor vessel, reactor vessel nozzles and the shielding concrete, the concrete under the reactor vessel supports, the neutron detector wells, the reactor coolant pumps, the pressurizer and steam generator compartments, and the rod position indicator data cabinet area.

6. Provide forced air cooling in sufficient capacity to remove control rod drive mechanism (CRDM) heat and reject it to the general Reactor Building atmosphere.

7. Provide Reactor Building cleanup capacity to reduce airborne radioiodine levels prior to personnel entry and to minimize radioactivity released during Reactor Building purging. Cleanup capacity is based upon equilibrium I-131 concentrations and 16 hours of cleanup system operation. Cleanup capacity is sufficient to reduce airborne I-131 levels to below the limits specified in 10 CFR 20, Appendix B, Table I.

8. Provide outside air purge capacity to reduce airborne radioactivity levels prior to personnel entry. The purge system design assumes a flow rate that, when considered with the site meteorology, results in site boundary concentrations that do not exceed allowable limits.

9. Provide a push-pull ventilation system for the refueling canal and refueling cavity which nominally causes air flow to travel across the entire water surface. 00-01

10. Provide control room monitoring of process conditions and equipment status necessary for operation of the systems.

11. Provide for remote operation, from the control room, of all systems except the push-pull refueling canal ventilation system and the elevator machine room ventilation system which are locally controlled.

12. For engineered safety features systems, provide sufficient redundancy and separation in air handling equipment, duct systems, controls and power supplies to satisfy the single failure criteria. 99-01

9.4.8.2 System Description

The system diagrams for the various reactor building systems are as follows:

1. Figure 9.4-28, Reactor Building Purge Supply and Exhaust System.

2. Figure 6.2-58, Post Accident Hydrogen Removal and Alternate Reactor Building Purge System.

3. Figure 9.4-29, Reactor Building Charcoal Cleanup System, Reactor Compartment Cooling System and Secondary Compartment Cooling System.

4. Figure 9.4-30, Reactor Building Refueling Water Surface System, Rod Position Data Cabinet System, and Reactor Building Elevator Machine Room System.

5. Figure 9.4-31, Reactor Building CRDM Shroud Cooling System.

Design and performance data are indicated on these figures.

9.4.8.2.1 Reactor Building Cooling System

The main components of this system include:

1. Four (4) air handling units, each capable of providing 33-1/3% of normal system cooling capacity. Each air handling unit has moisture separators, HEPA filters, a filter bypass section, cooling coils, fan and dual motors.

2. Gravity dampers to isolate each air handling unit discharge from the distribution duct system when the unit is not operating.

3. Ductwork from the discharge connection of the units to various elevations of the Reactor Building.

4. Instrumentation and control devices to perform the functions detailed in Section 6.2.2.5.2.

Section 6.2.2.2 presents detailed descriptions of system equipment and functions.

9.4.8.2.2 Reactor Building Purge Supply and Exhaust System

The main components of this system include:

1. Two (2) 50% capacity supply fans directing filtered and tempered outside air into the Reactor Building.

2. Two (2) 50% capacity exhaust fans exhausting Reactor Building air to the purge exhaust vent.

3. Two (2) 50% capacity supply plenums, each with roughing filters (80% efficiency on NBS dust), and electric heating coils.

4. One (1) 100% capacity exhaust filter plenum with roughing filters (80% efficiency on NBS dust), HEPA filters (99.97% efficiency on 0.3 micron particles), a charcoal filter (95% efficiency on methyl iodide at 85% relative humidity and 70°F) and a second bank of HEPA filters (same efficiency as the initial bank).

5. Four (4) 100% capacity containment isolation butterfly valves. These valves are air opened, spring closed and fail in the closed position upon loss of power or instrument air.

6. Air operated, spring opposed dampers to isolate supply or exhaust fans and the outside air inlet duct.

7. Supply ductwork to direct outside air to the supply plenums, the supply fans and into the Reactor Building. Exhaust ductwork to direct Reactor Building exhaust air to the exhaust plenums, the exhaust fans and the purge exhaust vent.

8. Instrumentation and control devices to perform the following functions:

   a. Measure the pressure drop across the supply and exhaust filter banks by means of differential pressure gages (local indication only).

   b. Cause an alarm in the control room upon detection of high concentration of smoke in the discharge of each supply and exhaust fan.

   c. Cause an alarm in the control room upon detection of high temperature in the discharge of each supply and exhaust fan.

   d. Cause an alarm by means of a temperature scanner upon detection of high temperature in the charcoal filter plenum.

   e. Indicate fan isolation damper position by means of status lights in the control room.

   f. Indicate containment isolation butterfly valve position by means of status lights and ESF monitor lights in the control room.

   g. Provide means for manual operation of the following equipment from the control room.

      (1) Supply fans and associated isolation dampers. One (1) switch is provided for each fan. The isolation dampers operate in conjunction with the associated fan.

      (2) Exhaust fans and associated isolation dampers. One (1) switch for each fan is provided. Dampers operate in conjunction with the associated fans.

      (3) Containment isolation butterfly valves. One (1) switch is provided for each valve. Interlocks affecting valve operation are discussed in Section 9.4.8.3.2.

      (4) Outside air damper. One (1) switch is provided.

   h. Automatically maintain minimum supply air temperature by controlling the supply system heating coils by means of a pneumatic temperature controller.

   i. Indicate, in the control room, supply and exhaust fan motor status.

   j. Indicate and record, in the control room, Reactor Building purge exhaust flow rate.

   k. Cause an alarm in the control room upon detection of excessive fan vibration.

l. Measure, record, and provide high radiation alarms and interlocks to close purge supply and exhaust isolation valves on the occurrence of high radiation levels in the Reactor Building cooling system duct (RM-A2) (see Section 12.2.4) and in the purge exhaust duct (RM-A4) (see Section 11.4).

m. Measure, record, and provide high radiation alarms and interlocks to close purge supply and exhaust isolation valves on the occurrence of high radiation levels in the manipulator crane area of the Reactor Building (RM-G17A and RM-G17B) (see Section 12.1.4).

n. Close the purge supply and exhaust isolation valves upon receipt of a containment isolation signal.

The 36 inch Reactor Building supply and exhaust system may be operated during cold shutdown and refueling to maintain suitable radiation levels inside the Reactor Building. This system is operated prior to personnel entering the Reactor Building to reduce radiation levels inside.

The 36 inch purge system supplies filtered and tempered outside air to the Reactor Building and exhausts air from the Reactor Building through HEPA and charcoal filters to the purge exhaust vent. The 36 inch purge system is powered from normal power sources, except for the solenoid valves and limit switches associated with the system containment isolation valves. These components are powered from Class 1E power sources. System equipment is operated and monitored from the control room. The 36 inch purge system supply and exhaust fans and plenums are located in the Auxiliary Building.

The 36 inch purge system and the 6 inch alternate purge system (see Section 9.4.8.2.3) use common outside air supply and exhaust vents, a common outside air intake damper and a common exhaust filter plenum. In other respects these 2 systems are separate.

9.4.8.2.3 Alternate Reactor Building Purge System

Major components of the alternate Reactor Building purge system include the following:

1. One (1) 100% capacity pressure blower to supply filtered outside air to the Reactor Building.

2. One (1) 100% capacity pressure blower to exhaust air from the Reactor Building to the purge exhaust vent.

3. One (1) 100% capacity supply filter plenum with roughing and medium efficiency (85-90% on NBS dust) filters.

4. One (1) 100% capacity exhaust filter plenum with roughing filters (80% efficiency on NBS dust), HEPA filters (99.97% efficiency on 0.3 micron particles), and a charcoal filter (95% efficiency on methyl iodine at 85% relative humidity and 70°F).

5. Four (4) containment isolation gate valves. These valves are spring return, air operated and fail in the closed position upon loss of power or instrument air.

6. Supply ductwork to direct air from the purge intake vent to the Reactor Building.

7. Exhaust ductwork to direct air from the Reactor Building to the purge exhaust vent on the Auxiliary Building roof.

8. Instrumentation and control devices to perform the following functions:

    a. Measure pressure drop across supply and exhaust filter banks by means of differential pressure gages (local indication only). (Part of Reactor Building purge supply and exhaust system.)

    b. Cause an alarm by means of a temperature scanner upon detection of high temperature in the charcoal filter plenum. (Part of Reactor Building purge supply and exhaust system.)

    c. Cause an alarm in the control room upon purge exhaust pressure blower motor trip.

    d. Indicate containment isolation valve position by means of status lights in the control room.

    e. Indicate purge exhaust pressure blower motor status by means of lights in the control room.

    f. Indicate and record, in the control room, purge exhaust flow rate (recorder is part of Reactor Building purge supply and exhaust system).

    g. Provide means for manual operation of the following equipment from the control room:

        (1) Supply and exhaust pressure blowers.

        (2) Containment isolation valves.

        (3) Outside air intake damper.

    h. Measure, record, and provide high radiation alarms and interlocks to close purge supply and exhaust isolation valves on occurrence of high radiation levels in the Reactor Building cooling system duct (RM-A2) and in the purge exhaust duct (RM-A4) (see Section 11.4).

i. Close the purge supply and exhaust isolation valves upon receipt of a containment isolation signal.

The 6 inch alternate Reactor Building purge system may be operated up to 1000 hours per year during modes 1 - 4 to maintain suitable moisture and radiation levels inside the Reactor Building. In addition to the ventilation functions described, the alternate Reactor Building purge system performs combustible gas control and pressure relief functions as discussed in Section 6.2.5. 00-01

9.4.8.2.4 Reactor Building Charcoal Cleanup System

The main components of this system include:

1. Two (2) 50% of system capacity fans to recirculate the general Reactor Building atmosphere through the Reactor Building charcoal cleanup filter plenums.

2. Two (2) 50% of system capacity Reactor Building charcoal cleanup filter plenums, each with roughing filters (80% efficiency on NBS dust), HEPA filters (99.97% efficiency on 0.3 micron particles), charcoal filters (95% efficiency on methyl iodide at 85% relative humidity and 70°F) and a second bank of HEPA filters (same efficiency as the initial bank).

3. Instrumentation and control devices to perform the following functions:

   a. Measure the pressure drop across the filter banks using differential pressure gages (local indication only).

   b. Cause an alarm in the control room upon detection of high concentration of smoke at the suction of each fan. Note that these duct detectors are maintained by the plant, but are not credited because other means exist to detect a fire in the Reactor Building. Their purpose is to aid plant operators in their decision making process. RN 13-016

   c. Cause an alarm in the control room upon detection of high temperature at the suction of each fan.

   d. Cause an alarm in the control room upon detection of high temperature in the charcoal filter plenum.

   e. Provide means to operate the fans from the control room. One (1) control switch is provided for each fan.

   f. Cause an alarm in the control room upon detection of excessive fan and motor vibration.

g. Indicate, in the control room, fan motor status.

h. Cause an alarm in the control room upon fan motor trip.

The Reactor Building charcoal cleanup units are operated prior to Reactor Building access, during personnel access and during refueling operations to reduce iodine concentration to acceptable levels. One (1) or both units are manually operated and monitored from the control room. The units, when in operation, filter Reactor Building air and discharge it to the general Reactor Building atmosphere. The units are powered from normal power supplies.

The filter plenums and related fans are located on platforms along the perimeter of the Reactor Building above the operating floor.

9.4.8.2.5 Reactor Building Reactor Compartment Cooling System

The main components of this system include:

1. Two (2) 100% capacity supply fans to direct cooled Reactor Building air into the compartments surrounding the reactor vessel.

2. Gravity dampers to isolate the inactive fan.

3. Ductwork to direct cooled ambient air to the incore instrument chase from the discharge of the fans.

4. Instrumentation and control devices to perform the following functions:

   a. Cause an alarm in the control room upon detection of high concentration of smoke in the primary compartment incore instrument chase. Note that this detector is maintained by the plant, but is not credited because other means exist to detect a fire in the Reactor Building. Their purpose is to aid plant operators in their decision making process. RN 13-016

   b. Cause an alarm in the control room upon detection of high ambient temperature in the primary compartment incore instrument chase.

   c. Provide means to operate the fans from the control room. One (1) control switch is provided for each fan.

   d. Cause an alarm in the control room upon detection of excessive fan and motor vibration and trip the affected fan motor.

   e. Indicate, in the control room, fan motor status.

   f. Cause an alarm in the control room upon fan motor trip.

Either 1 of the 2 fans operates continuously during normal operation and, during shutdown so that heat losses from the reactor vessel and nozzles can be removed. In the unlikely event of the failure of both fans, full power operation can be supported by establishing natural circulation ventilation of the reactor cavity within 16 hours of the loss of forced ventilation. Natural circulation can be established by opening the door (RB-101) to the incore instrument chase. The fans are not required to operate during a post LOCA period. The fans when operating, direct air cooled by the Reactor Building cooling units into the reactor compartment from which it circulates around the reactor vessel, around neutron detector tubes, around the vessel supports and exits around the vessel nozzles and seal ring, thus removing heat from these items. The fans are supplied from normal power sources. The fans are operated and monitored from the control room. The fans are mounted in the wall enclosing the incore instrumentation tubes.

9.4.8.2.6 Reactor Building Secondary Compartment Cooling System

The main components of this system include:

1. Nine (9) supply fans to direct cooled Reactor Building air into the secondary compartments housing the reactor coolant pumps, steam generators and pressurizer. Six (6) of the 9 fans are normally required to operate.

2. Instrumentation and control devices to perform the following functions:

    a. Cause an alarm in the control room upon detection of high concentration of smoke in the discharge of each fan. Note that these detectors are maintained by the plant, but are not credited because other means exist to detect a fire in the Reactor Building. Their purpose is to aid plant operators in their decision making process. RN 13-016

    b. Cause an alarm in the control room upon detection of high temperature in the discharge of each fan.

    c. Provide means to operate the fans from the control room. One control switch is provided for each fan.

    d. Cause an alarm in the control room upon detection of excessive fan and motor vibration and trip the affected fan motor.

    e. Indicate, in the control room, fan motor status.

    f. Cause an alarm in the control room upon fan motor trip.

Two (2) of the 3 fans for each of the 3 secondary compartments operate continuously during normal operation so that reactor coolant pump, steam generator, pressurizer and piping heat losses can be removed. The fans are not required to operate during a post LOCA period. The fans, when operating, direct air cooled by the Reactor Building cooling units into the secondary compartments where it absorbs the heat losses listed above. The heated air exits above the operating floor at an elevated temperature. The fans are supplied from normal power sources. The fans are operated and monitored from the control room. The fans are mounted in shielded wall openings in the secondary compartments.

9.4.8.2.7 Reactor Building Refueling Water Surface System and Rod Position Indication Cooling System

The main components of this system include:

1. Two (2) 50% capacity supply fans to direct Reactor Building ambient air to the refueling water surface duct system.

2. One (1) 100% capacity exhaust fan to direct exhaust air from the refueling water surface to the purge exhaust filter system.

3. Ductwork from 1 of the vertical ducts of the Reactor Building cooling system is provided to supply cooling air to the rod position indication data cabinet area. Flexible ducts provide air directly from a supply grille to each air inlet of the 2 cabinets.

   As a backup for cooling the cabinet area a 100% capacity air handling unit is provided to supply filtered and cooled air to the area.

4. Ductwork from the supply fans to the refueling water surface supply duct distribution system and from the exhaust side of this system to the exhaust fan and then to the purge exhaust duct. Ductwork to and from the rod position indication data cabinet area and the related air handling unit.

5. Instrumentation and control equipment, including a local control station and circuitry to interlock the operation of the supply and exhaust fans with Reactor Building purge exhaust fan operation.

6. Instrumentation to indicate, in the control room, excessive discharge temperature from the rod position indication cooling system. When the air handling unit cooling system is not operating, this instrumentation also indicates an excessive temperature in the cabinet area.

The Reactor Building refueling water surface system is not normally operated, but does operate continuously during refueling periods to reduce operator exposure due to the release of airborne radioactivity from the refueling canal and refueling cavity surface. The system is arranged to develop a moving air flow across the surface of the refueling

canal and refueling cavity. The exhaust from this system is directed to the Reactor Building purge exhaust system. Each unit is supplied from normal power supplies. The fans are operated from a local control station. The supply and exhaust fans are mounted on the secondary compartment shield walls above the operating floor.
The rod position indication air handling unit operates as a backup cooling system during normal operating periods to maintain the rod position indicator data cabinet at a suitable ambient temperature. The air handling unit is served by normal power supplies. The cooling coil is supplied from the industrial cooling water system. The air handling unit is located adjacent to the rod position data cabinet.

9.4.8.2.8 Integrated Head Assembly CRDM Cooling System

The Integrated Head Assembly CRDM Cooling System is contained within the Integrated Head Assembly (IHA). The IHA houses internal ducting that pulls RB area air into the IHA and draws the air downward past the CRDM coils, providing cooling. The air is then ducted upward to a common air plenum which the fans draw from. Two (2) fans are normally operating which will exhaust the air from the plenum to the RB general area. RN 16-003

The main components of this system include:

1. Three (3) 50% capacity exhaust fans to draw general Reactor Building ambient air through the CRDM shroud for cooling. RN 16-003

2. Gravity dampers to isolate the inactive fans.

3. Ductwork connecting the exhaust ports of the CRDM shroud to the inlet connections of the exhaust fans, all within the Integrated Head Assembly (IHA). RN 16-003

4. Instrumentation and control devices to perform the following functions:

    a. Indicate, in the control room, the temperature of the air at the CRDM shroud plenum and cause an alarm in the control room upon detection of high air temperature. RN 16-003 RN 13-016

    b. Cause an alarm in the control room upon detection of high temperature in the discharge of each fan.

    c. Provide means to operate the fans from the control room. One control switch is provided for each fan.

    d. Cause an alarm in the control room upon detection of excessive fan and motor vibration.

    e. Indicate, in the control room, fan motor status.

    f. Cause an alarm in the control room upon fan motor trip.

Each fan is normally supplied from a BOP power source. However, provision is made to manually connect 1 unit to a Class 1E bus. The fans are operated and monitored from the control room. The fans are located above the air plenum atop the IHA.

9.4.8.2.9 Reactor Building Elevator Machine Room System

Major components of the Reactor Building elevator machine room system include the following:

1. A 100% capacity exhaust fan.

2. Fixed, wall inlet louvers.

3. Instrumentation and control devices to automatically limit maximum elevator machine room temperature by cycling the exhaust fan.

The system cyclically exhausts air from the elevator machine room to the general open area of the Reactor Building in response to a room thermostat when normal power is available. Makeup air from the general open area of the Reactor Building enters the room through fixed, wall inlet louvers. Equipment is located in the Reactor Building elevator machine room wall.

9.4.8.3 Safety Evaluation

9.4.8.3.1 Reactor Building Cooling and Filtering System

A safety evaluation of this system is presented in Section 6.2.1.

9.4.8.3.2 Reactor Building Purge Supply and Exhaust System

Containment isolation is safeguarded through the use of redundant, fail closed, butterfly valves on both the purge supply and exhaust lines. For both the supply and the exhaust portions of this system, redundant fans are furnished so that equipment failure does not prevent purge but simply extends the required purge time period. Radiation monitoring of the purge exhaust vent is provided by radiation monitor RM-A4 (see Section 11.4). Electrical interlocks allow no more than 1 valve of a redundant pair of containment isolation valves to be open unless the exhaust system is operating (1 valve of the pair can be open for testing purposes). Automatic closure of the 4 containment isolation valves of this system occurs upon receipt of a containment isolation signal (see Section 7.3) or a high radiation signal (see Sections 11.4, 12.1.4, and 12.2.4). These measures, combined with administrative control of system operation, ensure that containment air is not released to the atmosphere through uncontrolled paths. The purge supply and exhaust system are not required to operate during a post accident period. The purge supply and exhaust isolation valves, as noted above, isolate the containment and are redundant safety class equipment.

9.4.8.3.3 Alternate Reactor Building Purge System

Containment isolation is assured through the use of redundant, fail closed, gate valves on both the alternate purge supply and exhaust lines. Automatic closure of the 4 containment isolation valves in the alternate Reactor Building purge system occurs upon receipt of a containment isolation signal (see Section 7.3) or a high radiation signal (see Sections 11.4 and 12.2.4). These measures, combined with administrative control of system operation, ensure that containment air is not released to the atmosphere through uncontrolled paths. Post accident operation of the alternate purge system is discussed in Section 6.2.5.

The alternate Reactor Building purge system containment isolation valves and accessories are safety class equipment. The remainder of the system is not safety related.

9.4.8.3.4 Reactor Building Charcoal Cleanup System

Redundancy of cleanup units provides iodine removal capability even if 1 of the units is not available. This condition extends the required cleanup time period prior to purging, but does not prevent eventual completion of system function. This system is not required to operate under accident conditions and is not supplied from emergency power sources. The system is not safety-related.

9.4.8.3.5 Reactor Building Reactor Compartment Cooling System, Secondary Compartment Cooling System and CRDM Shroud Cooling System

For each of the these 3 systems, adequate redundancy of system components is provided to ensure that sufficient cooling capacity is delivered under varying conditions of component availability. These systems are not required to operate under accident conditions and are not safety-related.

In the unlikely event that natural circulation is relied upon to cool the reactor cavity, the temperature of the concrete at the reactor vessel support anchorages, and the air temperature around the nuclear instrumentation will exceed the design basis values. These elevated temperatures have been acceptably evaluated to support full power operation until the next regularly scheduled outage.

9.4.8.3.6 Reactor Building Refueling Water Surface System

This system is operated only during refueling and has no post accident safety function.

9.4.8.3.7 Reactor Building Elevator Machine Room System

The Reactor Building elevator machine room system operates in response to the room thermostat. The system has no post accident safety function and is not safety related.

9.4.8.4 Inspection and Testing Requirements

The Reactor Building systems are subjected to preoperational test procedures to verify the following: proper wiring and control hookup, system "in-place" integrity and leak tightness, proper function of system components and control devices and to establish system design air flows.

To ensure a continued state of readiness of the Reactor Building systems after completion of the preoperational tests, the following inspection, maintenance and test procedures are performed:

1. Reactor Building Cooling System

   Inspection and testing of the Reactor Building cooling system are discussed in Sections 6.2.2.4.2 and 6.5.1.4.

2. Reactor Building Purge Supply and Exhaust System and Alternate Reactor Building Purge System.

   a. Record filter pressure drops.

   b. Verify function of dampers or control devices necessary for monitoring or component isolation or changeover from normal to emergency mode.

   c. Bearing lubrication.

   d. Laboratory test of charcoal filter test canisters for decontamination efficiency.

   e. Inplace leak test of the HEPA and charcoal filters.

3. Reactor Building Charcoal Cleanup System

   Reactor Building charcoal cleanup system inspection, maintenance and testing requirements are the same as those for the Reactor Building purge supply and exhaust system.

4. Reactor Building Reactor Compartment Cooling System, Secondary Compartment Cooling System, CRDM Shroud Cooling System and Refueling Water Surface System.

   a. Bearing lubrication.

   b. Switch components that normally operate from standby to operating mode.

5. Reactor Building Elevator Machine Room System.

   a. Bearing lubrication.

9.4.9 REFERENCES

1. American Air Filter Company, "Impregnated Activated Carbon for Removal of Radioiodine Compounds from Reactor Containment Atmospheres," AAF TR-7102.

RN 12-034

9.5 OTHER AUXILIARY SYSTEMS

9.5.1 FIRE PROTECTION

The fire protection program is based on the NRC requirements and guidelines, Nuclear Electric Insurance Limited (NEIL) Property Loss Prevention Standards and related industry standards. With regard to NRC criteria, the fire protection program meets the requirements of 10 CFR 50.48(c), which endorses, with exceptions, the National Fire Protection Association's (NFPA) 805, "Performance-Based Standard for Fire Protection for Light Water Reactor Electric Generating Plants", 2001 Edition. V.C. Summer Nuclear Station (VCSNS) Unit 1 has further used the guidance of NEI 04-02, "Guidance for Implementing a Risk-Informed, Performance-Based Fire Protection Program under 10 CFR 50.48(c)" as endorsed by Regulatory Guide 1.205, "Risk-Informed, Performance Fire Protection for Existing Light-Water Nuclear Power Plants."

Adoption of NFPA 805, "Performance-Based Standard for Fire Protection for Light Water Reactor Electric Generating Plants", 2001 Edition in accordance with 10 CFR 50.48(c) serves as the method of satisfying 10 CFR 50.48(a) and General Design Criterion 3. Prior to adoption of NFPA 805, General Design Criterion 3, "Fire Protection" of Appendix A, "General Design Criteria for Nuclear Power Plants," to 10 CFR Part 50, "Licensing of Production and Utilization Facilities," was followed in the design of safety and non-safety related structures, systems, and components (SSC), as required by 10 CFR 50.48(a). RN 12-020

NFPA 805 does not supersede the requirements of GDC 3, 10 CFR 50.48(a), or 10 CFR 50.48(f). Those regulatory requirements continue to apply. However, under NFPA 805, the means by which GDC 3 or 10 CFR 50.48(a) requirements are met may be different than under 10 CFR 50.48(b). Specifically, whereas GDC 3 refers to SSCs important to safety, NFPA 805 identifies fire protection systems and features required to meet the Chapter 1 performance criteria through the methodology in Chapter 4 of NFPA 805. Also, under NFPA 805, the 10 CFR 50.48(a)(2)(iii) requirement to limit fire damage to SSCs important to safety so that the capability to safely shut down the plant is satisfied by meeting the performance criteria in Section 1.5.1 of NFPA 805.

A Safety Evaluation was issued on February 11, 2015 by the NRC, that transitioned the existing fire protection program to a risk-informed, performance-based program based on NFPA 805, in accordance with 10 CFR 50.48(c).

9.5.1.1 Design Basis Summary

9.5.1.1.1 Defense-in-Depth

The fire protection program is focused on protecting the safety of the public, the environment, and plant personnel from a plant fire and its potential effect on safe reactor operations. The fire protection program is based on the concept of defense-in-depth. Defense-in-depth shall be achieved when an adequate balance of each of the following elements is provided:

1. Preventing fires from starting,

2. Rapidly detecting fires and controlling and extinguishing promptly those fires that do occur, thereby limiting fire damage,

3. Providing an adequate level of fire protection for structures, systems, and components important to safety, so that a fire that is not promptly extinguished will not prevent essential plant safety functions from being performed.

9.5.1.1.2 NFPA 805 Performance Criteria

The design basis for the fire protection program is based on the following nuclear safety and radiological release performance criteria contained in Section 1.5 of NFPA 805: RN 12-020

1. Nuclear Safety Performance Criteria. Fire protection features shall be capable of providing reasonable assurance that, in the event of a fire, the plant is not placed in an unrecoverable condition. To demonstrate this, the following performance criteria shall be met:

   a. Reactivity Control. Reactivity control shall be capable of inserting negative reactivity to achieve and maintain subcritical conditions. Negative reactivity inserting shall occur rapidly enough such that fuel design limits are not exceeded.

   b. Inventory and Pressure Control. With fuel in the reactor vessel, head on and tensioned, inventory and pressure control shall be capable of controlling coolant level such that subcooling is maintained for a PWR and shall be capable of maintaining or rapidly restoring reactor water level above top of active fuel for a BWR such that fuel clad damage as a result of a fire is prevented.

   c. Decay Heat Removal. Decay heat removal shall be capable of removing sufficient heat from the reactor core or spent fuel such that fuel is maintained in a safe and stable condition.

d. Vital Auxiliaries. Vital auxiliaries shall be capable of providing the necessary auxiliary support equipment and systems to assure that the systems required under (a), (b), (c), and (e) are capable of performing their required nuclear safety function.

e. Process Monitoring. Process monitoring shall be capable of providing the necessary indication to assure the criteria addressed in (a) through (d) have been achieved and are being maintained.

2. Radioactive Release Performance Criteria. Radiation release to any unrestricted area due to the direct effects of fire suppression activities (but not involving fuel damage) shall be as low as reasonably achievable and shall not exceed applicable 10 CFR, Part 20, Limits.

Chapter 2 of NFPA 805 establishes the process for demonstrating compliance with NFPA 805.

Chapter 3 of NFPA 805 contains the fundamental elements of the fire protection program and specifies the minimum design requirements for fire protection systems and features.

Chapter 4 of NFPA 805 establishes the methodology to determine the fire protection systems and features required to achieve the nuclear safety performance criteria outlined above. The methodology shall be permitted to be either deterministic or performance-based. Deterministic requirements shall be “deemed to satisfy” the performance criteria, defense-in-depth, and safety margin and require no further engineering analysis. Once a determination has been made that a fire protection system or feature is required to achieve the nuclear safety performance criteria of Section 1.5, its design and qualification shall meet the applicable requirement of Chapter 3. RN 12-020

9.5.1.1.3 Codes of Record

For specific applications and evaluations of plant fire protection system codes and standards, refer to the FP Design Basis Document (DBD), NFPA 805 Fire Protection. The codes and standards used for the design and installation of plant fire protection systems are as follows:

- NFPA 10, Installation of Portable Fire Extinguishers (1973)
- NFPA 12, Standard on Carbon Dioxide Extinguishing Systems (1973)
- NFPA 13, Installation of Sprinkler Systems (1975, 1980)
- NFPA 14, Standpipe and Hose Systems (1974)
- NFPA 20, Centrifugal Fire Pumps (1974)
- NFPA 24, Standard for Outside Protection (1973)

- NFPA 30, Flammable and Combustible Liquids Code (1973)
- NFPA 50A, Gaseous Hydrogen Systems (1973)
- NFPA 51B, Standard for Fire Prevention During Welding, Cutting, and Other Hot Work (1999)
- NFPA 72, Standard for the Installation, Maintenance, and Use of Protective Signaling Systems (1990)
- NFPA 72E, Standard on Automatic Fire Detectors (1978)
- NFPA 76, Standard for the Fire Protection of Telecommunications Facilities (2009)
- NFPA 80, Fire Doors and Windows (1973)
- NFPA 90A, Installation of Air Conditioning and Ventilating Systems (1973)
- NFPA 101, Code for Safety to Life from Fire in Buildings and Structures (1976)
- NFPA 220, Types of Building Construction (1975)
- NFPA 241, Standard for Safeguarding Construction, Alteration, and Demolition Operations (2000)
- NFPA 251, Standard Methods of Tests of Fire Endurance of Building Construction and Materials (1999)
- NFPA 252, Standard Methods of Tests of Door Assemblies (1999) RN 12-020
- NFPA 255, Standard Method of Test of Surface Burning Characteristics of Building Materials (2000)
- NFPA 256, Standard Methods of Fire Tests of Roof Coverings (1998)
- NFPA 600, Standard on Industrial Fire Brigades (2005)
- NFPA 701, Standard Methods of Fire Tests for Flame Propagation of Textiles and Films (1999)
- NFPA 805, Performance-Based Standard for Fire Protection for Light Water Reactor Electric Generating Plants (2001)
- NFPA 1081, Standard for Industrial Fire Brigade Member Professional Qualifications (2001)

9.5.1.2 System Description

9.5.1.2.1 Required Systems

Nuclear Safety Capability Systems, Equipment, and Cables

Section 2.4.2 of NFPA 805 defines the methodology for performing the nuclear safety capability assessment. The systems equipment and cables required for the nuclear safety capability assessment are contained in the FP DBD.

Fire Protection Systems and Features

Chapter 3 of NFPA 805 contains the fundamental elements of the fire protection program and specifies the minimum design requirements for fire protection systems and features. Compliance with Chapter 3 is documented in the FP DBD.

Chapter 4 of NFPA 805 establishes the methodology and criteria to determine the fire protection systems and features required to achieve the nuclear safety performance criteria of Section 1.5 of NFPA 805. These fire protection systems and features shall meet the applicable requirements of NFPA 805 Chapter 3. These fire protection systems and features are documented in the FP DBD.

Radioactive Release

Structures, systems, and components relied upon to meet the radioactive release criteria are documented in the FP DBD.

9.5.1.2.2 Definition of “Power Block” Structures

Where used in NFPA 805 Chapter 3 the terms “Power Block” and “Plant” refer to structures that have equipment required for nuclear plant operations. For the purposes of establishing the structures included in the fire protection program in accordance with 10 CFR 50.48(c) and NFPA 805, the plant structures listed in Table 9.5-1 are considered to be part of the “Power Block”. RN 12-020

9.5.1.3 Safety Evaluation

The FP DBD documents the achievement of the nuclear safety and radioactive release performance criteria of NFPA 805 as required by 10 CFR 50.48(c). This document fulfills the requirements of Section 2.7.1.2 “Fire Protection Program Design Basis Document” of NFPA 805. The document contains the following:

1. Identification of significant fire hazards in the fire area. This is based on NFPA 805 approach to analyze the plant from an ignition source and fuel package perspective.

2. Summary of the Nuclear Safety Capability Assessment (at power and non-power) compliance strategies.

    a. Deterministic compliance strategies.

    b. Performance-based compliance strategies (including defense-in-depth and safety margin.

3. Summary of the Non-Power Operations Modes compliance strategies.

4. Summary of the Radioactive Release compliance strategies.

5. Summary of the Fire Probablistic Risk Assessments.

6. Key analysis assumptions to be included in the NFPA 805 monitoring program.

9.5.1.4 Fire Protection Program Documentation, Configuration Control and Quality Assurance

In accordance with Chapter 3 of NFPA 805 a fire protection plan documented in Station Administrative Procedure SAP-131 defines the management policy and program direction and defines the responsibilities of those individuals responsible for the plan's implementation. SAP-131:

1. Designates the senior management position with immediate authority and responsibility for the fire protection program.

2. Designates a position responsible for the daily administration and coordination of the fire protection program and its implementation. RN 12-020

3. Defines the fire protection interfaces with other organizations and assigns responsibilities for the coordination of activities. In addition, SAP-131 identifies the various plant positions having the authority for implementing the various areas of the fire protection program.

4. Identifies the appropriate authority having jurisdiction for the various areas of the fire protection program.

5. Identifies the procedures established for the implementation of the fire protection program, including the post-transition change process and the fire protection monitoring program.

6. Identifies the qualifications required for various fire protection program personnel.

7. Identifies the quality requirements of Chapter 2 of NFPA 805.

Detailed compliance with the programmatic requirements of Chapters 2 and 3 of NFPA 805 are contained in the FP DBD.

9.5.2 COMMUNICATIONS SYSTEMS

9.5.2.1 Design Bases

The communication systems are designed to provide reliable communications between all essential areas of the station, and to essential locations remote from the plant during normal operations or under emergency conditions. This capability is provided by diverse types of communication systems.

9.5.2.2 Description

9.5.2.2.1 Intra-Plant Communications

The intra-plant communications network consists of the following systems:

1. A page/party public address with evacuation alarms and a fire alarm.

2. A maintenance communications system.

3. A redundant paging system in selected areas.

4. A fuel handling communication system (tied with main system, item 1).

5. A private telephone system.

6. Emergency Communications Plant Digital Radio Repeater System. RN 12-020

Working stations that may require communication between plant personnel and the control room or control room evacuation panel during and/or after transients or accidents are identified in Table 7.4-1. Types of communication systems available at each working station are shown by Figures 9.5-1a through 9.5-1h.

9.5.2.2.1.1 Page/Party Public Address System

The page/party public address system is the main plant communications system. It provides facilities for voice communications at stations located in strategic operating areas. From each of these stations, information can be broadcast over system speakers located in every building and control area throughout the plant. Paging type communications equipment is capable of effective operation to 110 decibels.

Two-way conversations are possible between stations over telephone type receiver-transmitter handsets. The system is common-talking so that all stations may take part in any conversation.

The public address system, powered from an uninterruptible power supply system vital bus, is normally used in daily operations to communicate messages between individuals in the plant. In an emergency, the system may be used to alert all personnel on the site. The evacuation alarms and fire alarm are manually initiated from the control room. These alarms are sounded through the paging system to ensure audibility throughout the plant, with the exception of the control room where the speakers associated with the main page/party public address system are muted. Alarms override the paging system when actuated.

A switching arrangement at each handset station enables that handset to be switched from the paging circuit to the amplified, party line circuits. Three (3) separate party line circuits are provided. Individual party line circuits are selected by a three-position selector switch. Speakers do not carry party line conversation. The circuits are so arranged that when the party line feature is in use, a second conversation can take place simultaneously over the page circuit with no interference between the 2 circuits. Handsets perform satisfactorily without the use of acoustic protective enclosures or devices in areas where the noise level may be as high as 115 decibels.

There are 2 subsystems to the main page/party system:

1. The fuel handling paging/party system.

2. A system of paging/party line access jacks for use with portable handset units.

The fuel handling paging/party system consists of handsets and dual input speakers which can be switched to a separate communications system during refueling. A switch is provided on the designated handsets to isolate them from the main plant system and to tie them to the dual input speakers. These speakers carry both the main plant system and the fuel handling paging system.

The paging/party line access jack receptacles are placed at locations where communication is desirable on a limited basis. Each jack accepts the plug from a portable handset/speaker station. The portable station functions in the same manner as a standard handset station.

All handset stations are designed for maximum safety and isolation from live circuits under all operating conditions.

9.5.2.2.1.2 Maintenance Communications System

The maintenance communications system contains a network of plug-in jacks in selected areas of the plant. This system is completely isolated from all other communication systems.

Headsets, consisting of earphones and a microphone, are connected through the plug-in jacks to 4 two-wire nonshielded channels permitting direct communications between persons in different areas. The system obtains its power from the non-Class 1E power system bus. This system is normally used for maintenance of calibration and equipment. During an emergency, the system may be used as an alternate means to relay messages between different areas of the plant.

9.5.2.2.1.3 Redundant Paging System

The redundant paging system consists of handsets, speakers, amplifiers, and accessories similar to the main page/party system. This system is powered from a Class 1E source. This system is completely independent of all other communication systems and is limited to areas where communications are required under emergency operating conditions.

All equipment in the redundant paging system is painted red. This system operates only in the paging mode and only over redundant speakers.

9.5.2.2.1.4 Private Telephone System

A private telephone system using commercial type telephone handsets is installed throughout the station for local use and offsite communications. The telephone system has a reliable power supply with battery backup which maintains the system in an operational condition during a loss of normal station power.

The system consists of switchboard equipment, power supply and telephones. The switchboard is equipped for multiple private subscribers, 2 wire lines for local service and links for simultaneous talking paths. 98-01

Backup control systems are provided for critical switching and signaling equipment so that if 1 component fails, the entire system is not lost.

9.5.2.2.1.5 Emergency Communications Plant Digital Radio Repeater System

This is a new plant digital radio repeater system. This system is installed for use by plant Operations, Maintenance and Fire Brigade personnel to meet NFPA 805 Emergency Communications criteria. This system is designated as the primary NFPA 805 Emergency Communications system, and the existing Gai-Tronics plant paging system is considered as a back-up system. The system has a reliable power supply with battery back-up which maintains the system in an operational condition for up to 24 hours during a loss of normal station power. RN 12-020

The system consists of strategically located antennas located within different areas of the power block buildings for radio coverage. This will enable Plant Operations, etc. to communicate via hand held radios for normal and fire safe shutdown communication purposes.

The system is designed using redundant “A” and “B” antenna signal loops so that if one loop is compromised during a fire event, emergency communications from that area is still received by the antenna equipment in the other loop. RN 12-020

9.5.2.2.2 Plant to Offsite Communications

Plant to offsite communications operate through the private telephone system and in conjunction with the commercial telephone landline system, as well as through a fiber optics receiving and transmitting system. Both the landline and fiber optics systems operate through the private telephone system switchboard. 98-01

Commercial telephone landlines are provided between the station, and the control office of the Southern Bell Telephone and Telegraph in Columbia and Chapin, S. C.

The fiber optics system, owned and operated by SCE&G, consists of solid-state equipment designed and engineered for voice communication. The tones received via this channel have volume, fidelity and noise suppression comparable with the quality normally obtained on a commercial telephone. The master station is located at the main SCE&G office in Columbia, S. C. 98-01

Redundant paging system equipment is capable of effective operation to 110 decibels.

9.5.2.2.3 Safety Evaluation

A failure of 1 communication system does not affect the operation of the other types of communication systems since they are of diverse types and are not interdependent.

The operability of the onsite communications system is assured by installation of the redundant communications system (see Section 9.5.2.2.1.3). This redundant system has separate phone stations, power supply, line balance equipment and cable system. Phone stations of the redundant system consist of telephone type receiver-transmitters, a handset, amplifiers and speakers. The redundant system provides paging facilities only.

The plant to offsite communications systems are not subject to common mode failure due to loss of station power or failure of the interconnecting wireway. The redundant system is powered by a diesel backed bus. The normal plant paging system is supplied from a battery backed, 60 Hz static inverter. The telephone landlines are fed from offsite sources by the commercial telephone company. 98-01

9.5.2.3 <u>Inspection and Testing Requirements</u>

The design of the communications systems permits routine testing and inspection without disrupting normal communications. Since all systems are in daily use, any degradation is readily identified and corrected. The evacuation alarms and fire alarm systems are tested periodically in accordance with written and approved procedures.

Effective communication between the work stations identified in Table 7.4-1 and the control room is verified during plant startup and testing and is reverified periodically.

9.5.3 LIGHTING SYSTEMS

The lighting system throughout the plant, Service Building and outdoor areas is designed to provide good light distribution with adequate light intensities. The lighting system is divided into normal, essential, and emergency lighting.

9.5.3.1 Normal Lighting

Normal lighting is provided in attended areas and constitutes the majority of plant lighting. Illumination is from incandescent, fluorescent and high intensity discharge (HID) light sources supplied from buses other than engineered safety features (ESF) buses. Local lighting panels for 480 Y/277 volt, 3 phase, 4 wire and 208 Y/120 volt, 3 phase, 4 wire power supply the branch circuits.

Outdoor lighting consists of roadway, perimeter security, area lighting and switchyard lighting. Outdoor lighting is supplied by 480 volt, single phase power from the nearest available 480 volt load center. All poles and luminaires are effectively grounded.

9.5.3.2 Essential Lighting

Essential lighting operates in conjunction with and supplements the normal lighting where a more reliable source of illumination is required for the performance of critical tasks or for access or egress. Essential lighting is provided for access in the Turbine Building, Auxiliary Building, Diesel Generator Building, Water Treatment Building, Intermediate Building and Control Building. Essential lighting is also provided, with emergency d-c backup, for continuation of critical activities in the control room, relay room, computer room, and critical electrical distribution areas of the Control Building, as well as the evacuation panel and ESF switchgear rooms, and the diesel generator rooms. Essential lighting, supplied from ESF buses, is divided into Channel A and Channel B, as determined by the channel of the power supply bus. Class 1E fuses located in separate panels are connected in series with the Class 1E circuit breakers at the ESF bus to provide isolation, thereby eliminating the requirements for separation criteria identification. Local lighting panels for 480Y/280 volt, 3 phase, 4 wire and 208Y/120 volt, 3 phase, 4 wire supply the branch circuits. 99-01

9.5.3.3 Emergency Lighting

The emergency lighting system provides adequate station lighting in the Diesel Generator Building, Reactor Building, control room, and control room evacuation panels for control and maintenance of safety-related equipment, as well as for access and egress from these areas and egress from the Reactor Building. The Diesel Generator Building and Reactor Building emergency lighting panels are connected to the BOP battery, and the control room and control room evacuation panel room emergency

lighting panels are connected to the ESF batteries. Emergency lighting is provided in buildings to satisfy the South Carolina Building Code and the Illuminating Engineers Society Handbook, 5th Edition, and is supplied from the station 125 volt d-c system.

The d-c power is supplied from multi-purpose batteries equipped with battery chargers. This lighting, which is not a part of the normal or essential lighting supplying the areas, only becomes energized upon loss of power to Reactor Building normal lighting or upon loss of power to the Diesel Generator Building or control room essential lighting. The individual branch circuits are run in conduits different from the conduits for the normal lighting. Circuits feeding the panel boards are run in the cable trays applicable to the separation channel of the d-c power supply.

In addition to the 125 volt d-c system, self-contained battery packs are used in areas required for remote shutdown lighting for access and egress in buildings affected by loss of power.

9.5.3.4 Tests and Inspection

Everyday use of the normal and essential lighting systems is considered to be proof of system integrity. Periodic testing of the d-c emergency lighting system is accomplished by tripping the emergency panel sensing circuits.

9.5.4 DIESEL GENERATOR FUEL OIL STORAGE AND TRANSFER SYSTEM

9.5.4.1 Design Bases

The diesel generator fuel oil storage and transfer system is safety-related and is designed in accordance with the recommendations of ANSI N195[4] and satisfies the requirements of the DEMA Standard[6]. The system is designed to withstand the safe shutdown earthquake (SSE) without loss of function. The system is also protected against missiles. The diesel generator fuel oil storage tanks, day tanks and transfer pumps are designed in accordance with the ASME Code, Section III, and are classified Safety Class 2b, Seismic Category 1.

No single active or passive failure prevents the supply of fuel oil to at least 1 diesel generator.

The onsite capacity of each redundant diesel generator fuel oil storage and transfer system is sized to provide fuel oil for a minimum of 7 days of continuous operation of a diesel generator under time dependent load conditions enveloped by Table 8.3-3 Parts A2 and B2 following a design basis accident and loss of offsite power, as required by ANSI N195[4], except that the fuel inventory margin for modes 1-4 is 2% vs. the 10% recommended by ANSI N195. 02-01

9.5.4.2 System Description

Two (2) emergency diesel generator sets are provided. The diesel engines are fueled with No. 2 diesel fuel oil supplied by the diesel generator fuel oil storage and transfer system. Figure 9.5-2 presents the system diagram.

The system includes the following components:

1. Two (2) underground (buried) diesel generator fuel oil storage tanks are provided. The locations of these tanks are shown by Figure 9.5-2a. Each tank has a nominal capacity of approximately 52,000 gallons of No. 2 diesel fuel oil. This nominal tank capacity (52,000 gallons) is sufficient to hold the required fuel oil to sustain the operation of one diesel generator for 7 days under time dependent load conditions identified in Table 8.3-3. Each storage tank is vented to atmosphere and is protected from corrosion as necessary.

2. Four (4) full capacity, a-c, electric motor driven fuel oil transfer pumps, located in the basement of the Diesel Generator Building, are provided. These pumps are powered from the Class 1E electric system. Two (2) pumps are associated with each diesel generator fuel oil storage tank. The pumps take suction from the storage tank and supply fuel oil to the fuel oil day tank. Each pump is provided with a pressure relief recirculation line to the associated diesel generator fuel oil storage tank.

3. Two (2) diesel generator fuel oil day tanks are provided, 1 for each diesel engine. Each day tank is located near the associated diesel engine and is sized to store approximately 550 gallons of No. 2 diesel fuel oil. Each tank has sufficient fuel oil capacity to sustain full load operation for approximately 1.5 hours. The day tanks are located in accordance with the diesel generator manufacturer's requirements to ensure drainage of the normal clean fuel leakage from the injection pumps on the engines. Each day tank is separately vented to atmosphere and is provided with corrosion protection as necessary. An overflow line from each day tank returns fuel oil to the associated fuel oil storage tank. Two (2) positive displacement diesel fuel oil pumps are mounted on the engine. One (1) of these pumps is engine driven; the other, d-c motor driven. The pumps are of the positive displacement type with suction lift capability to draw fuel from the daytank. The diesel engine is also equipped with an engine mounted fuel oil accumulator tank to provide a reservoir which keeps the engine fuel oil headers full during engine shutdown periods. 98-01

4. A truck hose connection, strainer, pump, filter, associated piping and instrumentation are provided for fuel oil unloading.

Redundant components, except for the diesel generator fuel oil storage tanks, are located in a Seismic Category 1 structure and are isolated from each other.

The diesel generator fuel oil storage tanks are coated to afford protection against corrosion. Vents, located 3 feet above the site grade (elevation 436'), are equipped with flame arrestors.

9.5.4.3 Safety Evaluation

As a result of the redundancy incorporated in the system design, the diesel generator fuel oil storage and transfer system provides the minimum required safety functions under any one of the following conditions:

1. Loss of offsite power coincident with failure of 1 diesel generator.

2. Loss of offsite power coincident with maintenance outage or failure of 1 diesel generator fuel oil transfer pump associated with each diesel generator.

3. Loss of offsite power coincident with maintenance outage or failure of either diesel generator fuel oil storage tank.

4. A single failure analysis for the diesel generator fuel oil system is in accordance with Table 9.5.2.

Each fuel oil storage tank contains sufficient No. 2 diesel fuel oil for 7 days continuous operation of its associated diesel generator, with the time dependent loads identified in Table 8.3-3. A 10% fuel margin is maintained for Modes 5-6 in compliance with ANSI N195, and a 2% fuel margin is maintained in Modes 1-4; this reduced margin for Modes 1-4 was approved by the NRC per License Amendment 150. Fuel oil in large quantities is available within 7 days from commercial sources. Each diesel generator fuel oil day tank is sized to store approximately 550 gallons of No. 2 diesel fuel. 02-01

9.5.4.4 Test and Inspection Requirements

The diesel generator fuel oil supply piping is pressure tested during construction. Active system components: pumps, valves and controls; are functionally tested during startup and periodically thereafter. Diesel fuel oil analyses are performed periodically in accordance with Technical Specification, Section 4.

Surveillance testing of the diesel generator fuel oil, both upon initial delivery and periodic testing is based upon applicable ASTM standards. Since some of the ASTM standards used are applicable to other applications of petroleum fuel oils, some requirements in the standards will not be complied with. Specific examples of exceptions to requirements in the applicable standards include: RN 04-001

- The Sample containers used for sampling fuel oil using the ASTM D2276-88 (Determination of Particulate Contamination in Fuel Oil) method will not have a clean piece of plastic film rinsed with petroleum ether placed over the top of the bottle.

- Filtered petroleum ether of filtered 1,1,2-trichloro-1,1,2-trifluoroethene used in the ASTM D2276-88 method may be substituted with unfiltered 1,1,2-trichloro-1,1,2-trifluoroethene, n-7 hexane, or iso-octane.

- The viscometer bath temperature will be allowed a 0.05 degree C variation during the performance of Kinematic Viscosity, as described in ASTM D445 (Standard Test Method for Kinematic Viscosity of Transparent and Opaque Liquids).

- An alternate thermometer that meets the stated range and accuracy requirements of specified ASTM thermometers may be used during the analysis of diesel fuel oils. RN 04-001

- The determination of Flash Point in oil testing analysis results will not be corrected for barometric pressure.

The bases for these specific exceptions is documented in the Safety Evaluation for Amendment 164 to the facility Technical Specifications.

9.5.4.5 Instrumentation Application

Indication and monitoring of diesel fuel oil temperature is not required. The specified diesel fuel oil pour point range is 0°F to - 20°F. The diesel generator fuel oil storage tank and all fuel oil piping from the tank to the transfer pumps, located in the Diesel Generator Building, is buried below the frost line. The frost line was determined from National Fire Protection Association recommendations for depth of earth cover to avoid freezing of underground fire protection water mains.

Figure 9.5-2 shows pressure gages on the diesel fuel oil transfer pump discharge. Low fuel oil pressure in the diesel injector inlet header actuates an alarm on the main control board and the local diesel generator control panel. This low pressure alarm is not illustrated by Figure 9.5-2 because it is supplied by the diesel generator manufacturer.

9.5.5 DIESEL GENERATOR COOLING WATER SYSTEM

9.5.5.1 Design Bases

The diesel generator cooling water system is a self-contained, closed type system located in the Seismic Category 1 Diesel Generator Building. The water is cooled by thermostatically controlled heat exchangers wherein heat is rejected to the Service Water System (see Section 9.2.1). Cooling water is circulated by engine driven pumps through two subsystems. One, the intercooler system, provides cooling for the turbocharger air intercoolers and the alternator outboard bearing. The other, the jacket water system, cools the cylinder liners, cylinder heads and turbocharger cooling spaces. An expansion tank is provided and an electric heater and auxiliary, motor driven pump permit "keep warm" system operation under standby conditions. RN 02-008

The water in this closed system is treated with corrosion inhibitor in accordance with the manufacturer's recommendations.

The diesel engine cooling system is classified Safety Class 2b, Seismic Category 1 and is designed and fabricated in accordance with the ASME Code, Section III, Class 3, except for certain components not commercially available as ASME Code, Section III, Class 3 items. In the case of such items, other established industry codes or standards are applied. The system is also designed in accordance with the DEMA Standard[6].

The expansion tank is non-nuclear safety class and is connected to a Safety Class 2b, ASME Code, Section III, Class 3, standpipe by a non-nuclear safety class expansion joint. The 17 foot high standpipe is designed to provide sufficient static head to satisfy jacket water pump NPSH requirements and to provide adequate makeup to the system for 7 days of continuous operation of the diesel generator. The wall mounted expansion tank is seismically designed to preclude damage to safety related equipment during an earthquake.

9.5.5.2 System Description

The diesel generator cooling water system consists of 2 subsystems.

1. Intercooler System

   The turbocharger air intercoolers and alternator outboard bearing are cooled by the intercooler system. Circulation of treated cooling water is accomplished by an engine driven, centrifugal pump. Heat from the cooling water is rejected to the Service Water System through a thermostatically controlled heat exchanger. Also included is an expansion tank mounted on top of a standpipe which serves both the intercooler and jacket water systems. Figure 9.5-3 is a schematic of the system. RN 02-008

2. Jacket Water System

   The engine is cooled by the closed circuit jacket water system. Water, treated in accordance with the manufacturer's recommendations, is circulated through the cylinder liners, cylinder heads and turbocharger cooling spaces by an engine driven, centrifugal pump. Heat from the cooling water is rejected to the Service Water System through a thermostatically controlled heat exchanger. Also included is an expansion tank mounted on top of a standpipe which serves both the jacket water and intercooler systems.

   An electric heater and auxiliary, motor driven centrifugal pump are furnished to permit "keep warm" operation under standby conditions. Figure 9.5-4 is a schematic of the system.

Cooling water enters the engine from the external piping system through the lower headers at each side of the engine. It enters each cylinder at the lower end of the jacket through a duct in the frame opening (see Figure 9.5-5). The water circulates around the cylinder liner and then flows to the cylinder head through an external duct. The cylinder head cooling water also cools the exhaust valve guides. Cooling water also flows from the lower headers to the turbocharger.

After cooling, the water flows through the upper headers to the external piping and then to the heat exchanger.

Heat rejected and flow rates for both the intercooler system and jacket water system are summarized in Table 9.5-3, as are the design heat removal capacity and operating temperature differential.

9.5.5.3 Safety Evaluation

Each diesel generator unit is provided with a separate cooling water system. The use of engine driven pumps renders the cooling water systems immune to loss of offsite power. No single failure can compromise availability of emergency power since redundant diesel generators are provided.

Diesel generator protective trip signals, arising from malfunction of the diesel generator cooling water system, are bypassed under accident conditions.

9.5.5.4 Tests and Inspections

The diesel generator cooling water system is tested in conjunction with the testing of the diesel generator. No separate test of the cooling water system, except hydrostatic testing of certain portions, is performed. Those portions of the system upon which hydrostatic tests are performed by the manufacturer are indicated on notes of drawing 1MS-32-005. The diesel generator intercooler and jacket water systems, sheets 4 and 5 of drawing 1MS-32-005, are shown in simplified form in Figures 9.5-3 and 9.5-4. 99-01

9.5.5.5 Instrumentation Application

The diesel generator cooling water system is monitored and protected by pressure and temperature switches as shown in Figure 9.5-4. Local instrumentation is provided as shown by Figures 9.5-3 and 9.5-4.

The board mounted temperature indicator, with the high and low temperature alarm switches, senses temperature in the jacket water return line and indicates abnormal temperatures in the jacket water system. A low pressure alarm switch is also provided to indicate a system failure. These alarm switches are annunciated locally and by grouped alarms on the main control board. Excessive temperature or other maloperation of this intercooler system is indicated by board mounted temperature meters which sense air temperature in the engine air supply manifolds.

9.5.6 DIESEL GENERATOR STARTING SYSTEM

9.5.6.1 Design Bases

Each diesel generator is started by its own independent air starting system. These air starting systems cannot be cross connected in any manner. Each of the 2 air compressors for each diesel generator has sufficient capacity to recharge the air storage tanks from 0 to normal pressure in 110 minutes; the recharge time for each start with both compressors operating is approximately 5 minutes. The Diesel Generator procurement specification required the air storage tanks to have a sufficient capacity to permit 5 successive starts without recharge. Factory testing demonstrated the capacity for 10 consecutive starts, without recharge, using both air storage tanks. In these tests the engine was brought from rest to rated speed and voltage. These tests duplicate field starting conditions.

The air starting system is provided with a noncycling refrigerated air dryer. The air dryer provides air with a dew point of 35°F. Also, dirt and solid particles are filtered out during the drying process.

The diesel generator starting system is designed to remain operable during a total loss of offsite power.

The starting system was designed in accordance with the DEMA Standard[6] and is classified as Safety Class 2b, Seismic Category 1, with the exception of the air compressors and air dryer which are classified as non-safety related. The safety related position of the system is designed and fabricated in accordance with the ASME Code, Section III, and the DEMA Standard[6].

9.5.6.2 System Description

The starting system for one engine is shown by Figure 9.5-6, the simplified sketch of the manufacturer's drawing, 1MS-32-005 Sht 6. 99-01

Each diesel generator is provided with 2 independent air starting systems, 1 for each bank of cylinders. Compressed air in the range of 375 to 415 psig is supplied by 2 separate a-c, motor driven air compressors and storage tank systems. Each bank of engine cylinders has its own engine driven air start distributor with a connection to each cylinder. The engine starts using either or both banks. 99-01

Starting air pressure is also used to operate the governor servo rack booster which opens the fuel injection pump racks to ensure adequate fuel at startup.

The air starting system features a moisture separator with trap and a refrigerated air dryer with trap to remove water, oil and foreign particles from the air supply to the storage tanks. These features preclude fouling of the air start valve by contaminants, such as oil or rust.

Each air storage tank is protected from overpressure by a safety valve. Each of these tanks is also equipped with a pressure gage.

The system is skid mounted and includes necessary pressure switches and control devices for automatic operation of the air compressors. A low air pressure alarm switch is provided on the diesel engine skid in each of the air supply lines to the diesel air start valves. Low air pressure actuates alarms on the local control panel and main control board. Figure 9.5-6 shows instrumentation.

9.5.6.3 Safety Evaluation

Each diesel generator is equipped with a separate and independent starting air system, thereby protecting against a single failure effecting both generators. Use of 2 air compressors and 2 air receivers within each starting air system and independent air start distributors for each bank of engine cylinders provides added assurance of engine start. The storage capacity of the system, sufficient for 10 successive engine starts without recharging, ensures starting in the event of a loss of offsite power.

Low air pressure alarms are provided to alert the operator should starting air pressure decay to an unsatisfactory level.

9.5.6.4 Tests and Inspections

The diesel generator air starting system is tested in conjunction with diesel generator during startup and periodically thereafter. Factory testing of the system included hydrostatic testing and functional testing for total number of starts without recharging, for recharging time, and for total starting time.

9.5.6.5 Instrumentation Application

The diesel generator starting system is monitored and protected by pressure and temperature instrumentation as shown in Figure 9.5-6. 99-01

Low pressure alarm switches are provided as a part of the engine mounted gauge board; this alarm is annunciated locally and in a separate alarm on the main control board. Pressure switches are also provided for compressor control and a temperature switch is provided to alarm on high exit temperature from the air compressor. In addition, local indicators are provided at the gauge board and on the air compressor -- air storage tank skid. RN 04-039

9.5.7 DIESEL GENERATOR LUBRICATION SYSTEM

9.5.7.1 Design Bases

The diesel generator lubrication system is integral with the engine and is positive in action. Three (3) subsystems are provided. The engine lube oil system supplies oil under pressure to all main bearings and, through a pressure reducing valve, to the camshaft bearings, cam followers, fuel injection pumps and valve push rods. This subsystem also provides oil to the crank pin journals and for piston cooling, as well as to accessory gearing. A separate rocker lube system supplies oil to each cylinder head rocker assembly. An auxiliary oil system permits continuous prelubrication of the engines at "keep warm" temperature during standby and continuous bypass filtration of the main oil supply during engine operation.

The diesel generator lubrication system was designed in accordance with the DEMA Standard[6] and is classified Safety Class 2b, Seismic Category 1. Also, the system is designed and fabricated in accordance with the ASME Code, Section III, Class 3, except for certain components not commercially available as ASME Code, Section III, Class 3, items. In the case of such items, other established industry codes or standards are applied.

9.5.7.2 System Description

The diesel generator lubrication system is comprised of the following 3 subsystems:

1. Engine Lube Oil System

   In the engine lube oil system, an engine driven double rotor screw pump draws oil through a suction strainer from the engine sump and delivers it to a thermostatically controlled lube oil cooler and then through a 30 micron strainer to the main engine lube oil header. The header supplies lube oil under pressure to all main bearings and, through a pressure reducing valve, to the camshaft bearings, cam followers, fuel injection pumps and valve push rods. Branches from the main header supply lube oil to the camshaft and accessory drive gears.

   The main bearings are supplied through passages in the frame and bearings caps, feeding oil to the bearing groove. The oil flows through holes in the crank webs to the crank pin journals, providing bearing lubrication. Cooling oil then flows through the drilled connecting rod to furnish oil for piston cooling (see Figure 9.5-7).

   The lube oil cooler rejects a maximum of 1,395,000 Btu/hr to the Service Water System. Service water, at a maximum temperature of 95°F and flowing at 1000 gpm, is supplied to 3 series connected heat exchangers. The lube oil heat exchanger is the third in this series and receives service water nominally at 114°F and discharges the water nominally at 117°F, as designed by the diesel generator manufacturer. 99-01

2. Rocker Lube System

To protect the crankcase oil from contamination by possible cooling water and fuel leaks at the cylinder head upper deck level, the valve rockers are lubricated and drained by a separate system. A gear type pump mounted at the free end of the engine is driven by the engine crankshaft. The pump draws oil from an engine mounted reservoir and discharges it under pressure through a duplex filter to a header. Pipes from the header supply each cylinder head rocker assembly. Drain pipes return the oil to a drain header which conveys the oil back to the reservoir. The system includes a small motor driven pump for prelubrication. This pump is run automatically once a week for 5 minutes. A backup timer is provided to shut down the pump and alarm on overrun. An alarm is also provided to indicate failure of the pump contactor to close. Figure 9.5-9 depicts oil flow through a valve rocker.

3. Auxiliary Oil System

A motor driven gear pump, mounted on the diesel generator skid serves the following purposes:

a. It draws oil from the main sump through a suction strainer and discharges through an electric heater and a 5 micron filter into the engine lube oil system. During standby, this arrangement provides for continuous prelubrication at "keep warm" temperature.

b. During engine operation, this pump and associated components are used for continuous bypass filtration of the engine oil supply.

c. For initial engine startup, the pump is used to fill the external system and prelubricate the engine.

d. During maintenance, the pump is used to empty the engine sump.

9.5.7.3 Safety Evaluation

Each diesel generator is provided with a separate lubrication system, designed to operate under the same conditions as is the engine. The use of engine driven pumps for lube oil circulation renders the system immune to loss of offsite power and no single failure can compromise the availability of emergency power since redundant diesel generators are provided.

The diesel is provided with a crankcase cover installed with a pressure relief valve to mitigate the effects of a crankcase explosion. The diesel is also equipped with a high crankcase pressure alarm and trip (trip during test operating conditions only). 99-01

9.5.7.4 Tests and Inspections

The diesel generator lubrication system is tested in conjunction with the testing of the diesel generator.

To ensure diesel lube oil quality, periodic samples of oil are taken from the main and rocker lube oil systems. Lube oil is replaced when it no longer satisfies the requirements of MIL-L-2104B, viscosity SAE30, and TBN 7 to 13.

In addition, the operation of the rocker arm prelube pump is verified weekly.

Visual inspection of the diesel lube oil system during periodic engine testing and the provision of the lube oil system pressure and level alarms facilitate detection of any system leakage.

9.5.7.5 Instrumentation Application

The diesel generator lubrication systems are monitored and protected by pressure and temperature switches as shown in Figure 9.5-7. Local instrumentation is also shown by Figure 9.5-7.

The diesel engine sump is provided with a low level alarm. The rocker arm lube system is not equipped with temperature alarms or temperature indicators since it is not designed to provide cooling. 98-01

The lube oil sump temperature switch provides a low temperature alarm in the event of failure of either the motor driven auxiliary lube oil system or the lube oil keep warm heater.

9.5.8 DIESEL GENERATOR COMBUSTION AIR INTAKE AND EXHAUST SYSTEM

9.5.8.1 Design Bases

Design bases for the diesel generator combustion air intake and exhaust system include consideration of the following hazards and phenomena:

1. Wind loadings caused by tornadoes or hurricanes (see Section 3.3 for discussion of design basis wind and tornado).

2. Missile impact (see Section 3.5 for discussion of provisions for missile protection).

3. System capability to withstand single failure without loss of function of both diesel generators.

The elevation of the diesel generator combustion air intake and exhaust system is well above the maximum flood design water level (see Section 3.4). Contaminating substances in quantities sufficient to adversely affect diesel engine operation, if inducted with the combustion air, are not present at or near the site.

System components are classified as Seismic Category 1 and were designed in accordance with the DEMA Standard[6].

9.5.8.2 System Description

Two (2) separate and independent diesel generators are provided. For each diesel engine, the combustion air intake system consists of 2 filter/silencer units, mounted in a cubicle above the associated diesel generator, with connecting piping to the intake manifold of the engine. Each filter/silencer unit serves 1 engine cylinder bank. The exhaust system for each diesel engine consists of 1 muffler, mounted in a cubicle above the associated diesel generator, and connecting piping from the engine exhaust manifolds. A short exhaust stack extends from the muffler through the roof to the atmosphere.

The cubicles containing the filter/silencer units and the mufflers are Seismic Category 1 and are designed to protect the contained components from missile impact. Protection is accomplished by reinforced concrete construction and a labyrinth arrangement for admission of intake air to the filter/silencer units. See Section 3.5.1.4 for a discussion of missiles generated by natural phenomena.

The labyrinth arrangement also provides protection of the air intake system from atmospheric conditions. Louvers on the air intake opening and the labyrinth prevent wind circulation which could cause ice and snow buildup on the intake filter/silencer units.

The exhaust muffler is located within the Diesel Generator Building to provide protection from atmospheric conditions. The short, large diameter exhaust stack from the muffler is equipped with a weather protection cover. This cover precludes the possibility of clogging of the stack as a result of atmospheric conditions, such as ice, freezing rain and snow, during standby or operation of the diesel generator.

Figures 1.2-11 through 1.2-14 illustrate the arrangement of the combustion intake and exhaust system. Figure 9.5-10 shows details of the combustion air intake labyrinth and exhaust piping arrangement.

9.5.8.3 Safety Evaluation

The functioning of the diesel generator combustion air intake and exhaust system is not adversely affected by any of the phenomena or events postulated to occur during plant life. Each of the 2 diesel generators which comprise the onsite emergency power source is provided with completely separate and independent combustion air intake and exhaust systems. These redundant systems are physically separated and are housed in Seismic Category 1, missile resistant structures.

Specific conditions considered in the design are as follows:

1. Recirculation of diesel engine combustion products to the air intake is prevented. The exhaust stacks are spatially separated from, and located at a higher elevation than the intake filter/silencer units. Thus, since hot exhaust gases rise and disperse, recirculation to the intake is prevented.

2. Gases that could adversely affect diesel generator operation are not stored in the vicinity of the Diesel Generator Building.

3. Restriction of intake air flow is prevented by housing air intake components in a missile resistant structure and providing labyrinth passages for air ingress. System piping is designed to withstand the SSE without significant deformation.

4. The intake of particulates is prevented by the filter/silencer units through which intake air is filtered.

5. Low barometric pressure does not affect engine operation since each diesel engine is equipped with turbochargers. The turbochargers compensate for varying barometric pressure by increasing or decreasing boost pressure as required.

6. No high energy piping systems are located within the diesel generator buildings. Thus, such systems do not pose a threat to the combustion air intake and exhaust system.

9.5.8.4 Inspection and Testing Requirements

Inspection requirements for the diesel generator combustion air intake and exhaust system include:

1. Periodic inspection and cleaning and/or replacement of the air intake filter in accordance with manufacturer's recommendations.

2. Periodic inspection of exhaust mufflers and exhaust piping for evidence of corrosion due to action of the exhaust gases.

No specific provisions for testing of the system are required since periodic testing of diesel generator operation verifies proper operation of the combustion air intake and exhaust system.

9.5.9 REFERENCES

1. National Fire Protection Association, "Air Conditioning and Ventilating Systems," NFPA 90A, 1975.

2. National Fire Protection Association, "Proprietary Signaling Systems," NFPA 72D, 1975.

3. National Fire Protection Association, "Carbon Dioxide Systems," NFPA 12, 1973.

4. American National Standards Institute, "Fuel Oil Systems for Standby Diesel Generators," ANSI N195, April, 1976.

5. NOT USED.

6. Diesel Engine Manufacturers Association, "Standard Practices for Stationary Diesel Engines."

TABLE 9.5-1

POWER BLOCK STRUCTURES

Structure Description	Structure ID(s)
Alternate Fire Service Pump House	AFSPH
Auxiliary Boiler House	ABH
Auxiliary Building	AB
Circulating Water Pump House	CWPH
Control Building	CB
Diesel Generator Building	DG
Fuel Handling Building	FH
Intermediate Building	IB
Potable Water Building	PWB
Radiological Maintenance Building	RMB
Reactor Building	RB
Service Water Pump House	SWPH
Storage Facilities for Hydrogen, Oxygen, Nitrogen, and CO2	HCO2S and HNS
Switchyard	SWYD
Turbine Building	TB
Water Treatment Building	WTB
Yard (includes targeted manhole areas, Condensate Storage Tank, Refueling Water Storage Tank, Diesel Generator Fuel Oil Storage Tanks, Auxiliary Boiler Oil Storage Tanks, Transformers)	YD and MH

RN 12-020

TABLE 9.5-2

SINGLE FAILURE ANALYSIS DIESEL GENERATOR FUEL OIL SYSTEM

Component	Malfunction	Comments
A-C Fuel Oil Transfer Pump	Fails to start or stops operating	Alternate a-c pump in parallel
Piping	Leakage	Switch load to second diesel generator
Diesel Generator Fuel Storage Tank	Leakage	Switch load to second diesel generator

TABLE 9.5-3

DIESEL GENERATOR COOLING WATER SYSTEM
HEAT TRANSFER AND FLOW RATE (Major Components)

Component	Heat Rejection Rate (Btu/hr) [1]	Flow Rate(gpm)	Temp Diff (°F) [1]	Percentage Excess Heat Removal Cap.
Intercoolers [2]	3.906×10^6	1011	8	4.5
Intercooler Heat Exchanger	3.906×10^6	1010	8	7.3
Cylinder Liners [3] and Turbo Chargers [2]	5.776×10^6	896	13	Not Applicable
Jacket Water Heat Exchanger	5.776×10^6	650	18	36.5

00-01

NOTES:

[1] Heat rejection rates and temperature differentials are given for operation at 4676 kW (110 percent of continuous rating).

[2] Total for two.

[3] Total for twelve.