NRC FORM 195 (2-76)

U.S. NUCLEAR REGULATORY COMMISSION

DOCKET NUMBER 50-316

FILE NUMBER

NRC DISTRIBUTION FOR PART 50 DOCKET MATERIAL

TO: Mr. Edson G. Case

FROM: Indiana & Michigan Power Co.
New York, N. Y. 10004
John Tillinghast

DATE OF DOCUMENT 11/18/77

DATE RECEIVED 12/14/77

☑ LETTER ☑ ORIGINAL ☐ COPY ☐ NOTORIZED ☑ UNCLASSIFIED

PROP

INPUT FORM

NUMBER OF COPIES RECEIVED 1 SIGNED

DESCRIPTION: Notorized 11/18/77...Trans The Following:

jcm 12/16/77 2p

PLANT NAME: DONALD C. COOK UNIT # 2

ENCLOSURE: Information concerning the Unit 2 licensing review by the NRC staff consisting of:

1. A frequency decay study to supplement licensee's response to Question 212.10
2. Information concerning a 11/11/77 presentation to the NRC staff regarding steam generator enclosure and support capabilites.
3. Additional information on the RHR low flow alarm to supplement licensee's response to Question 212.32.

29p

Dist Per J. Lee 12/15/77

30 ENCL / REPRO LTRS

FOR ACTION/INFORMATION

SAFETY		ENVIRONMENTAL
ASSIGNED AD:		ASSIGNED AD: V. MOORE (LTR)
✓ BRANCH CHIEF:	KNIEL	BRANCH CHIEF:
✓ PROJECT MANAGER: (3)	MLYNCZAK	PROJECT MANAGER:
✓ LIC. ASST: LTR	J. LEE	LIC. ASST:
		B. HARLESS

INTERNAL DISTRIBUTION

✓ REG FILES	SYSTEMS SAFETY	PLANT SYSTEMS	SITE SAFETY &
✓ NRC PDR	R. MATTSON	✓ TEDESCO	ENVIRON ANALYSIS
✓ I & E (2)	SCHROEDER	BENAROYA	DENTON & MULLER
OELD		✓ LAINAS	CRUTCHFIELD
GOSSICK & STAFF	ENGINEERING	IPPOLITO	
HANAUER	KNIGHT	E. ROSA	ENVIRON TECH
MIPC	BOSNAK		ERNST
CASE	SIHWEIL	OPERATING REACTORS	BALLARD
BOYD	PAWLICKI	STELLO	YOUNGBLOOD
		EISENHUT	
PROJECT MANAGEMENT	REACTOR SAFETY	✓ SHAO	SITE TECH
SKOVHOLT	ROSS	BAER	GAMMILL (2)
P. COLLINS	NOVAK	BUTLER	
HOUSTON	ROSZTOCZY	GRIMES	SITE ANALYSIS
MELTZ	CHECK		VOLLMER
HELTEMES			BUNCH
SK	AT & I		J. COLLINS
	SALTZMAN		KREGER
	RUTBERG		

EXTERNAL DISTRIBUTION

✓ LPDR: St Joseph Mi.	NAT LAB:	
✓ TIC		
✓ NSIC		
REG V (J. HANCHETT)		
✓ 16 CYS SENT CATEGORY B	TO ACRS	

CONTROL NUMBER MA4 GD

NRC FORM 195 (2-76)

INDIANA & MICHIGAN POWER COMPANY
P. O. BOX 18
BOWLING GREEN STATION
NEW YORK, N. Y. 10004

REGULATORY DOCKET FILE COPY

November 18, 1977

Donald C. Cook Nuclear Plant Unit 2
Docket No. 50-316
CPPR No. 61

RECEIVED
DEC 14 1977
U.S. NUCLEAR REGULATORY COMMISSION
Mail Section

Mr. Edson G. Case, Acting Director
Office of Nuclear Reactor Regulation
U.S. Nuclear Regulatory Commission
Washington, D.C. 20555

Dear Mr. Case:

This letter transmits information concerning the Unit 2 licensing review by the NRC staff. The following items are attached to this letter:

1. A frequency decay study to supplement our response to Question 212.10.

2. Information concerning a November 11, 1977 presentation to the NRC staff regarding steam generator enclosure and support capabilities.

3. Additional information on the RHR low flow alarm to supplement our response to Question 212.32.

Under separate cover you will be receiving directly from Mr. M.H. Judkis of Westinghouse Electric Corporation, three letters dated November 18, 1977, as follows:

1. AEW-7035 Additional Environmental Qualification Testing Information (Response to Question 030.1).

2. AEW-7036 Responses to Outstanding Items of NRC Report to ACRS.

773500106

REGULATORY DOCKET FILE COPY

3. AEW-7037 Steam Generator Enclosure Pressure Analysis.

Very truly yours,

John Tillinghast
Vice President

JT:ea
Attachments

Sworn and subscribed to before me on this 18TH day of November, 1977 in New York County, New York.

Notary Public

GREGORY M. GURICAN
Notary Public, State of New York
No. 31-4643431
Qualified in New York County
Commission Expires March 30, 1979

cc: G. Charnoff
P. W. Steketee
R. J. Vollen
R. C. Callen
R. Walsh
D. V. Shaller - Bridgman
R. W. Jurgensen

Summary of NRC Meeting on November 11, 1977 Concerning Preliminary Analysis of Adequacy of Steam Generator Enclosure to New Westinghouse TMD Studies

In preparation for our response to NRC Question 022.3 on the Donald C. Cook Nuclear Plant Unit No. 2, which is due to the NRC in January, 1978, Westinghouse Electric Corporation has performed preliminary analyses using their TMD computer code for analyses of a steam line break accident. Information concerning the results of these analyses is being sent under separate cover. The Westinghouse letter transmitting this information is AEW 7037.

Since the adequacy of both the supports and the steam generator compartment had not been evaluated based upon localized pressures using a new TMD model, a preliminary evaluation of their adequacy was made, and it was found that both the supports and the structure were adequate to withstand the new calculated pressures. The results of these preliminary evaluations indicated that the load on the supports would still be within the yield strength of the material with the asymmetric loads predicted for the postulated steam line break using the new TMD analysis.

A preliminary evaluation of the structural adequacy of the steam generator enclosure indicated that the enclosure was adequate to withstand the consequences of the postulated break with a safety factor (load factor) of 1.5.

Details of the supports and structural analyses presented at the meeting are attached. Also attached is further information supporting the current structural capability inside the containment, and a figure showing the postulated break location.

NOTE: GAP = I.D. RESTRAINT MINUS O.D. PIPE
DIVIDED BY 2

MAIN STEAM SPEC J14 A106 GRADE C.
STAINLESS C.S. OR A155 GRADE KC70
CLASS I WELDED C.S.
32"OD - 1.125" N.W.
30"OD. - 1" N.W.

MAX PRESS. - 1170 PSIG

Break 2

Snubber Capacity = 800 kips each

4 per steam generator

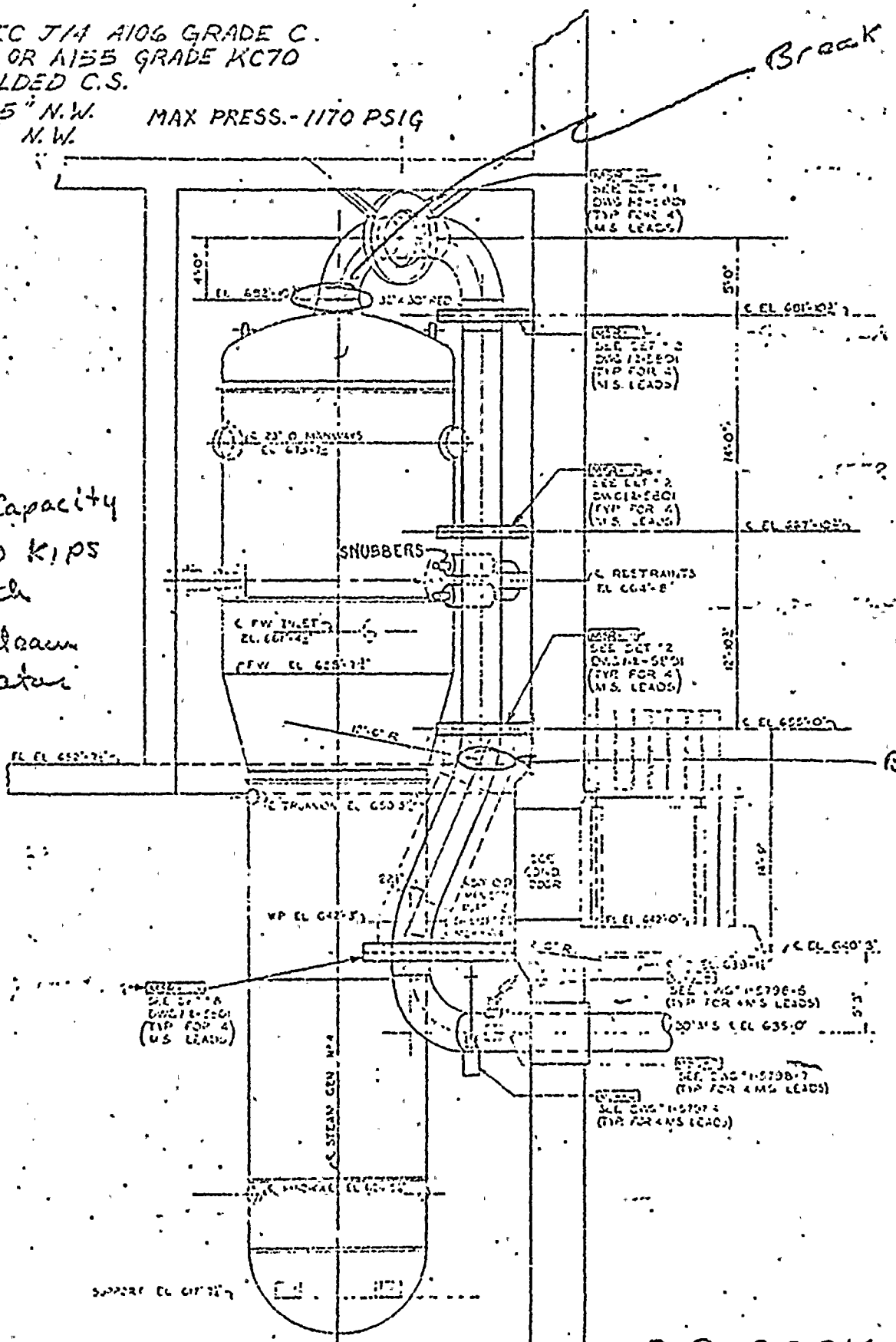

D C COOK PLANT
REF SEL DWG 1-5305

The steam generator enclosure has been conservatively reanalyzed.

Indicated on Chart 1 are the limiting internal pressures at various critical points of the enclosure.

Communication between the enclosure (lower volume) and the upper volume of the containment is possible only at the perimeter wall deliniated by points 1, 2 and 3 and the roof slab points 7, 9 and 10. Points 4, 5 and 6 are on the divider wall between the two compartments of the enclosure. Breeching of this wall does not effect a by-pass area to the upper volume.

The ultimate strength pressure capabilities listed have been arrived at considering the following:

a. Mu - the reduction of available re-bar area after consideration for axial tension.
b. N - the reduction of available re-bar area after consideration for moment.
c. V - The reduction of allowable shear stress due to consideration of axial tension and moment.

To ensure a minimum load factor of 1.5 under operating conditions, the ultimate capability of the enclosure must be at least 1.5 (26.4) = 39.6 psi.

The capibility as limited by section 2 is 41 psi. However this limitation is imposed because of an assummed equal distribution of axial tension to the hoop reinforcement in both faces of the enclosure wall. There is enough reinforcement in one face of the wall to resist the entire applied hoop tension.

In this respect, the stresses due to the hoop bending moment at section 2 can be considered to be a secondary stress condition. If there should be flexural yielding at this section, it would be self relieving and not cause cracks through the wall.

At section 1 the pressure as limited by shear is 51 psi which with a load factor of 1.5 on design reduces to an allowable uniform design pressure of 34.0 psi. Section 1 is therefore the actual limiting case for the barrier wall.

The only other sections where communication could occur between the enclosure and the upper containment volume are at sections 7, 9, and 10 as delinia ted on figure 2. As is indicated on Chart 1 the pressure limitations there are greater than at section 1.

If we were to take credit for redistribution of stresses due to meridional action the allowable design pressures as governed by the barrier wall would be much greater.

Horizontal seismic forces on the enclosure wall due to a safe shutdown earthquake are equivalent to an internal pressure of 1.6 psi. With a load factor of 1.0 applied to the design pressure when combined with an SSE we have (1.0) (26.4) + 1.6 = 28.0 psi which is small when compared with a factored pressure of (1.5) (26.4) = 39.6 psi.

In all instances we have maintainedthe required load factor for the allowable design pressure. Figures 2 and 3 are the bending moment and shear curves for the enclosure.

We are confident that the new transient pressures, because of the localized areas in which the peaks occur, are well within the capability of the enclosure to contain them and maintain the required load factors.

ENGINEERING DEPT.
AMERICAN ELECTRIC POWER SERVICE CORP.
2 BROADWAY
NEW YORK

SHEET 1 OF ____
DATE ____ BY ____ CK. ____
COMPANY ____ G.O. ____
PLANT ____

SUBJECT *Ultimate Strength Capability of Steam Generator Enclosure*

Critical Location / Ultimate Strength				MOMENT		SHEAR		HOOP		MAX. LOAD	REMARKS
				M_u	P	V_u	P	N	P		
SET.	NO.	X'_{FT}	X_{FT}	K-ft/FT	PSI	K/FT	PSI	K/FT	PSI	PSI	
HOOP	1	0	11.25	213	52	50	51	91	55	51	V Shear Bound
	2	2.	9.25	72	41	32	170	77	41	41	M+N
	3	60°		45	55	32	170	100	55	55	M+N
	4	133°		60	43	32	106	80	43	43	M+N
	5	7'		139	75	32	100	114	75	75	M+N
	6	0	11.25	175	70	40	50	96	53	50	V
MERIDIONAL	7	EL. 690'-0 EL. 652'-0		61	62	36	68	43	62	62	M+N
	8	EL. 671'-0		47	80	36	68	115	80	68	V
SLAB	9	At Junction		175	52	48	79	39	52	52	M+N
	10	At Center		89	63	48	100	48	63	63	M+N

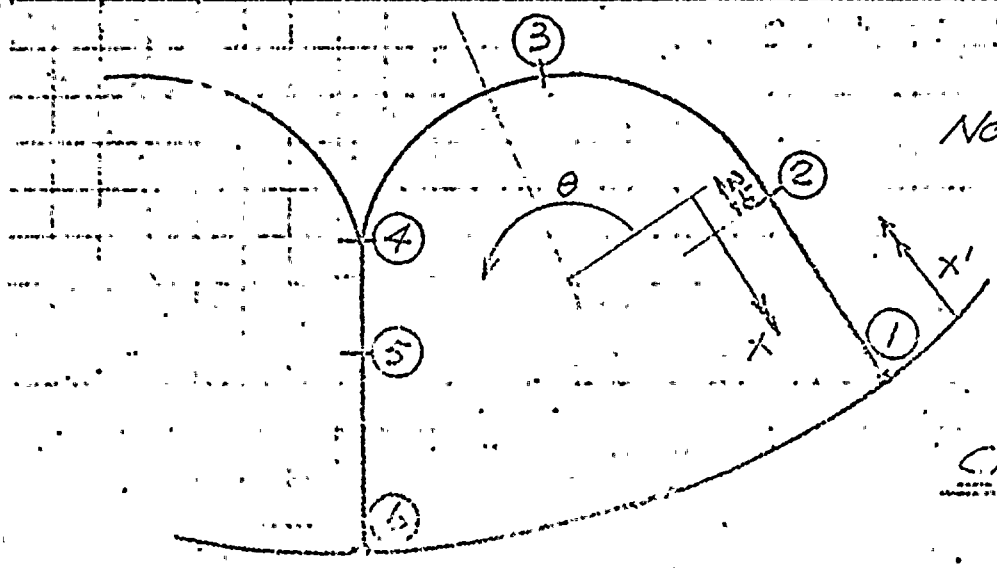

Note: Ultimate Capability P=41 psi @ Sect 2

Combined Moment & Hoop Forces.

CHART 1.

ENGINEERING DEPT.
AMERICAN ELECTRIC POWER SERVICE CORP.
2 BROADWAY
NEW YORK

SHEET 11 OF
DATE BY CK
COMPANY G.O.
PLANT

SUBJECT

Ultimate Strength Capability of Steam Generator Enclosure.

(Meridional Direction due to Uniform Load : $p = 1$ KSF.)

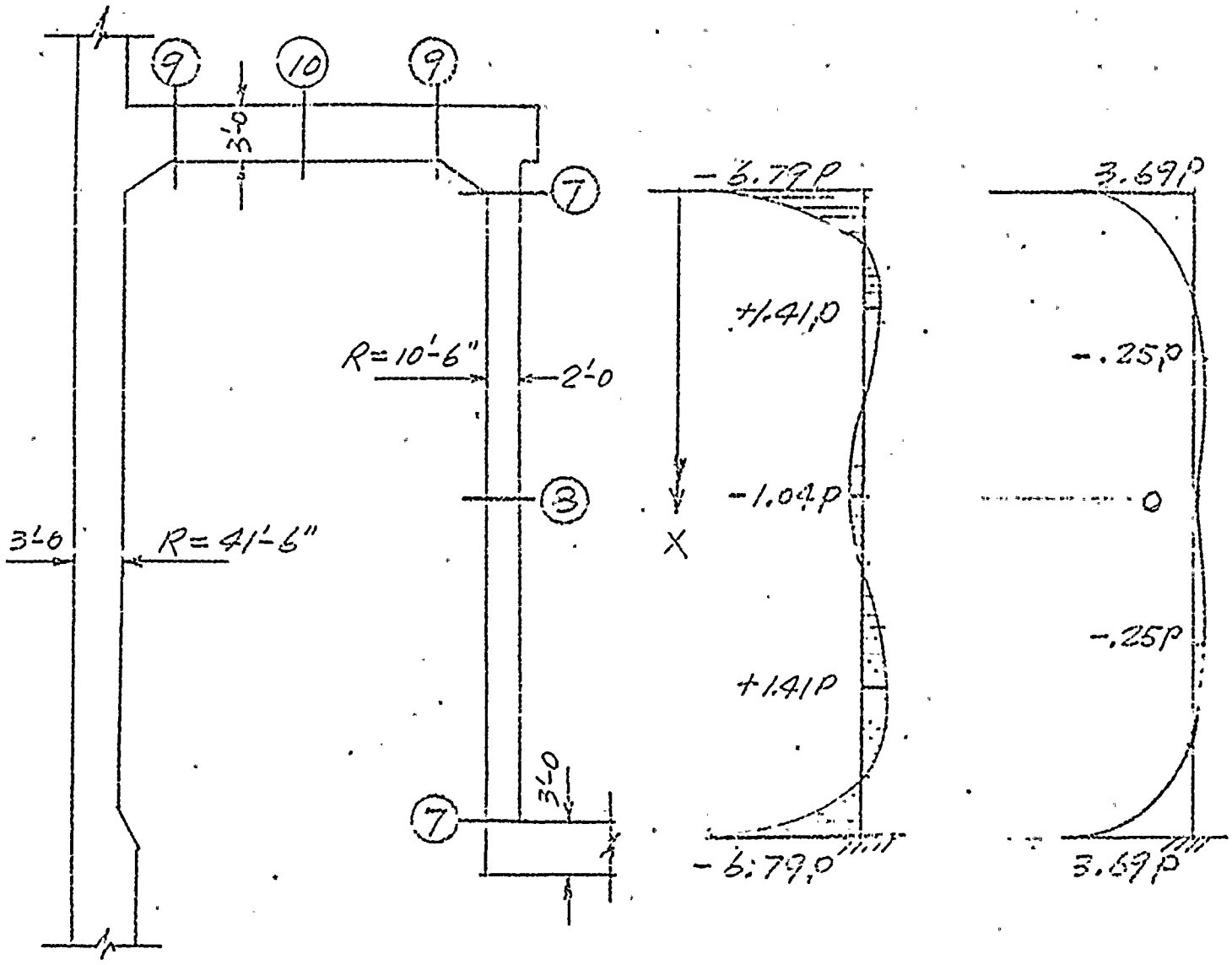

Critical Location Moment Diagram Shear Diagram

FIG. 1.

FORM

ENGINEERING DEPT.
AMERICAN ELECTRIC POWER SERVICE CORP.
2 BROADWAY
NEW YORK

SHEET 111 OF
DATE 11/[illegible]/77 BY E.G. CK.
COMPANY G.O.
PLANT

SUBJECT COOK PLANT - STEAM GEN. ENCLOSURES

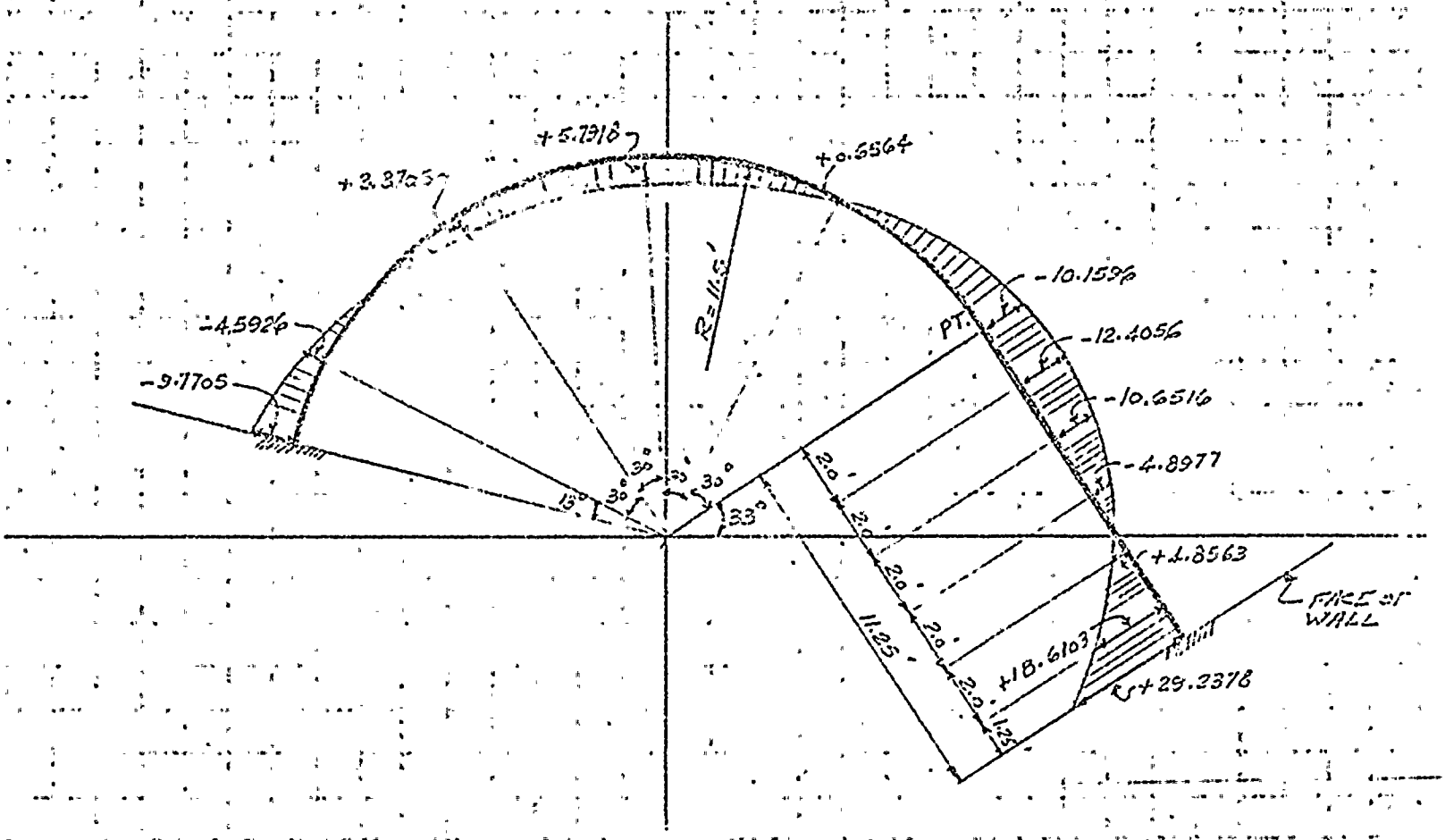

BENDING MOM. DIAGRAM (FOR UNIT PRESSURE P=1KSF.)
(3/16" = 1'-0 & 1" = 40 FT.K)

FIG. 2:

ENGINEERING DEPT.
AMERICAN ELECTRIC POWER SERVICE CORP.
2 BROADWAY
NEW YORK

SHEET 77 OF
DATE 11/[illegible]/71 BY F.C. CK
COMPANY G.O.
PLANT

SUBJECT COOK PLANT - STEAM GEN. ENCLOSURES

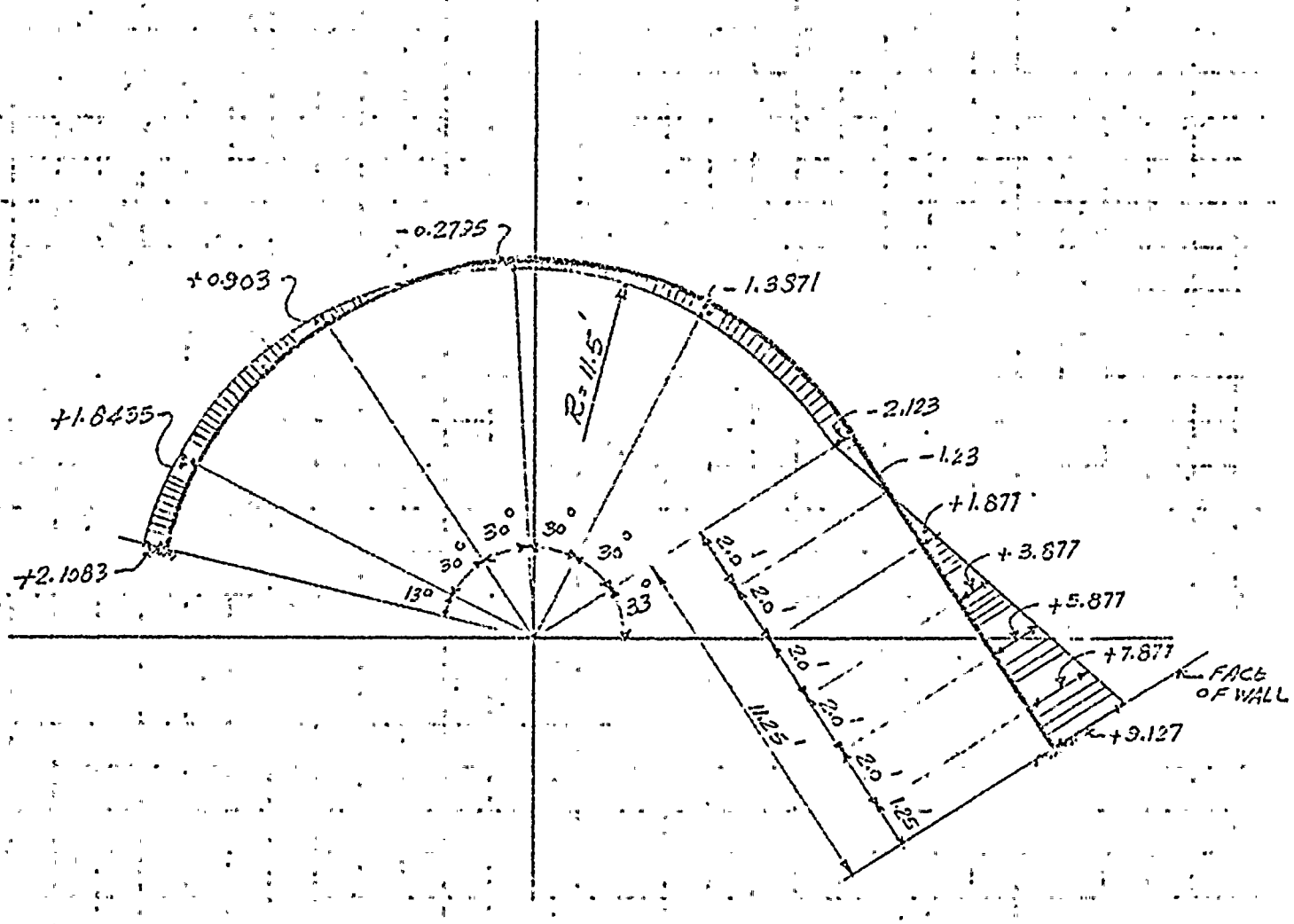

SHEAR DIAGRAM (FOR UNIT PRESSURE $p = 1$ KSF)
($3/16" = 1'-0$ & $1" = 20p$: Kips)

FIG. 3.

DISCUSSION OF STRUCTURAL MARGINS AVAILABLE TO CARRY INCREASED STEAM GENERATOR COMPARTMENT PRESSURE LOADS DUE TO A POSTULATED STEAM LINE BREAK ACCIDENT

In chart 1 is presented the maximum permitted differential pressure loads as determined by the current structural analysis at critical locations for tension and moment and shear. This analysis treated the steam generator enclosure as a cylinder and ring elements subjected to a uniform maximum compartment pressure load. In figure 5 is shown the anticipated increases in pressure load capacity of the concrete cubicle when (a) a more rigorous non-symmetric shell analysis is performed which considers (b) the actual distribution of reinforcement areas, and (c) the actual rather than the nominal 28-day strengths of concrete and reinforcing steel. The reanalysis will also include the effects of nonsymmetric rather than uniform maximum pressure distribution through the compartment which should have the effect of reducing the overall load on the compartment enclosure. Preliminary results indicate that combined bending and tension capacity resulting from the reanalysis should be increased by approximately 40 percent and shear capacity by 10 percent.

In table 1 is presented a comparison of the anticipated pressure capacities resulting from the reanalysis and the currently calculated differential pressure loads determined at the various node locations as shown in figure . Results of this preliminary evaluation indicate that the steam generator cubicle has sufficient increased capacity to carry the pressure loads, including the original load factor of 1.5, except for shear at the juncture of the common cubicle wall and ice condenser compartment wall, where the load factor margin would be 1.25 instead of 1.5. It should be noted that at this location there is no communication between the lower and upper containment volumes. In addition, the calculated pressure determined at that location tends to be localized in a small area and therefore its effect load on the concrete section reduced.

FIGURE 5 - COMPARISION OF ANTICIPATED TO CURRENT PRESSURE LOAD CAPACITIES OF THE STEAM GENERATOR CUBICLE

A. CURRENT ANALYSIS

1. LIMITING IN TENSION AND MOMENT	41 PSI
2. LIMITING IN SHEAR	50 PSI

B. CHANGE IN CAPACITY DUE TO MORE RIGOROUS SHELL ANALYSIS, NON-UNIFORM PRESSURE LOADING AND USING ACTUAL RATHER THAN DESIGN 28-DAY MATERIAL PROPERTIES AND REINFORCING STEEL PLACEMENT AREAS.

1. TENSION AND MOMENT

CURRENT LIMITING CAPACITY	41.0 PSI	
a. INCREASED CAPACITY DUE TO 50 PERCENT REDUCTION (1) IN BLENDING MOMENT FROM SHELL ANALYSIS	8.2 PSI	
b. INCREASED CAPACITY DUE TO 20 PERCENT INCREASED MATERIAL PROPERTIES AT 28-DAYS	8.2 PSI	
	$\frac{57.4 \text{ PSI}}{1.5}$	= 38.2 PSI

2. SHEAR

CURRENT LIMITING CAPACITY	50.0 PSI	
INCREASED CAPACITY DUE 20 PERCENT INCREASE (2) IN MATERIAL PROPERTIES	5.0 PSI	
	$\frac{55.0 \text{ PSI}}{1.5}$	= 36.6 PSI

(1) BASED ON CALCULATIONS WHICH INDICATE THAT APPROXIMATELY 60 PERCENT REBAR STRESS DUE TO MEMBRANE TENSION PLUS 40 PERCENT DUE TO BENDING MOMENT.

(2) BASED ON FACT THAT SHEAR STRENGTH VARIES AS SQUARE ROOT OF CONCRETE MATERIAL STRENGTH.

TABLE 1 - COMPARISON OF CALCULATED AND ANTICIPATED PRESSURE LOAD CAPACITY OF THE STEAM GENERATOR CUBICLE

NODE	CALC. MAX. ΔP PSI	UNIF. STRESS CAPABILITY (INC. 1.5 LOAD FACTOR)	ADDITIONAL MARGIN
46	30.9	38.1	
47	26.0	39.7	
48	26.0	39.7	
49	26.3	36.4	
50	26.6	36.4	
52	21.04	45.7	
53	15.3	36.4	
54	13.8	38.9	
51-60*	38.8	32.3	38.8 (LOCAL PRES. DIST.)

*ACROSS STEAM GENERATOR CUBICLE DIVIDER WALL - DOES NOT COMMUNICATE BETWEEN UPPER AND LOWER COMPARTMENT.

PRESENTATION
ON STEAM GENERATOR SUPPORTS TO NRC
ON NOVEMBER 11, 1977

The presentation included a description of the supports and an evaluation of the supports for the new asymmetric pressure loadings.

Figure 1 is a three dimensional view of the NSSS system which shows the steam generator upper lateral, lower lateral and vertical support systems.

Figure 2 is a plan view of the upper support system. It includes a 2" x 24" belly band, snubbers, and steel embedments.

Figure 3 is a plan view of the lower lateral support system including inner and outer frame elements. The outer frame consists of wide-flange sections which have 1-1/2" x 12" flanges and a 2" x 21" web.

Figure 4 shows the inner frame which is keyed into the system generator lugs at four locations. Loads are transferred from inner frame to the outer frame by shims at six locations.

Figure 5 shows the vertical supports which are 12" round double extra strength pipe columns with universal pinned end joints to accommodate thermal displacements.

The conservative assumptions used in the analysis of the steam generator upper lateral supports were reviewed. These conservative assumptions are listed as follows:

1. The steam generator was assumed to be rigid.

2. A dynamic load factor of two was used to convert dynamic loads to equivalent static loads.

3. The peak pressure rather than the steady-state pressure was considered.

4. Total stresses resulting from load combinations were determined by adding maximum absolute magnitudes of the various loads.

Figure 6 shows the routing of the main steam line and its pipe restraints. Two breaks are postulated in the enclosure area, one at the steam generator main steam line outlet nozzle and the second break at the lower end of the vertical run.

For the first break, the governing element in the support system is the vertical column support system. Dead load, operating loads, design basis earthquake (DBE) forces, jet impingement, blowdown pipe reaction lines, and asymmetric pressure loads were combined to calculate total column load. This load was found to be 73% of the design load capacity.

For the second break, the governing element is the belly band in the steam generator upper lateral support. For this condition, the asymmetric pressure load and the design basis earthquake forces when combined were found to be less than the original design capacity of the upper lateral support system. For each of the postulated breaks, it was found that the supports were adequate to carry the new loads with no change to the original design criteria.

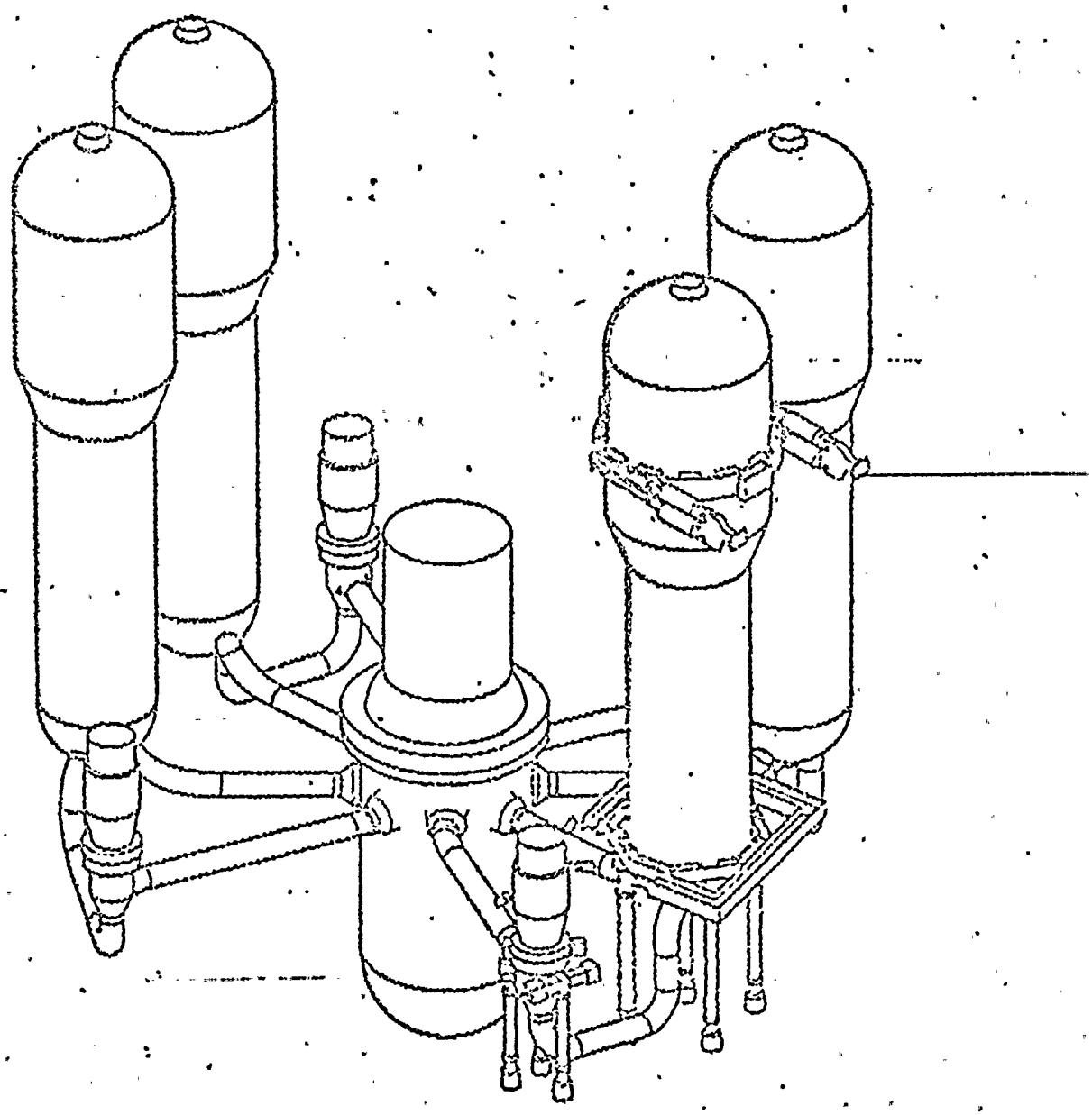

FIGURE 1

STEAM GENERATOR AND
REACTOR COOLANT PUMP SUPPORTS

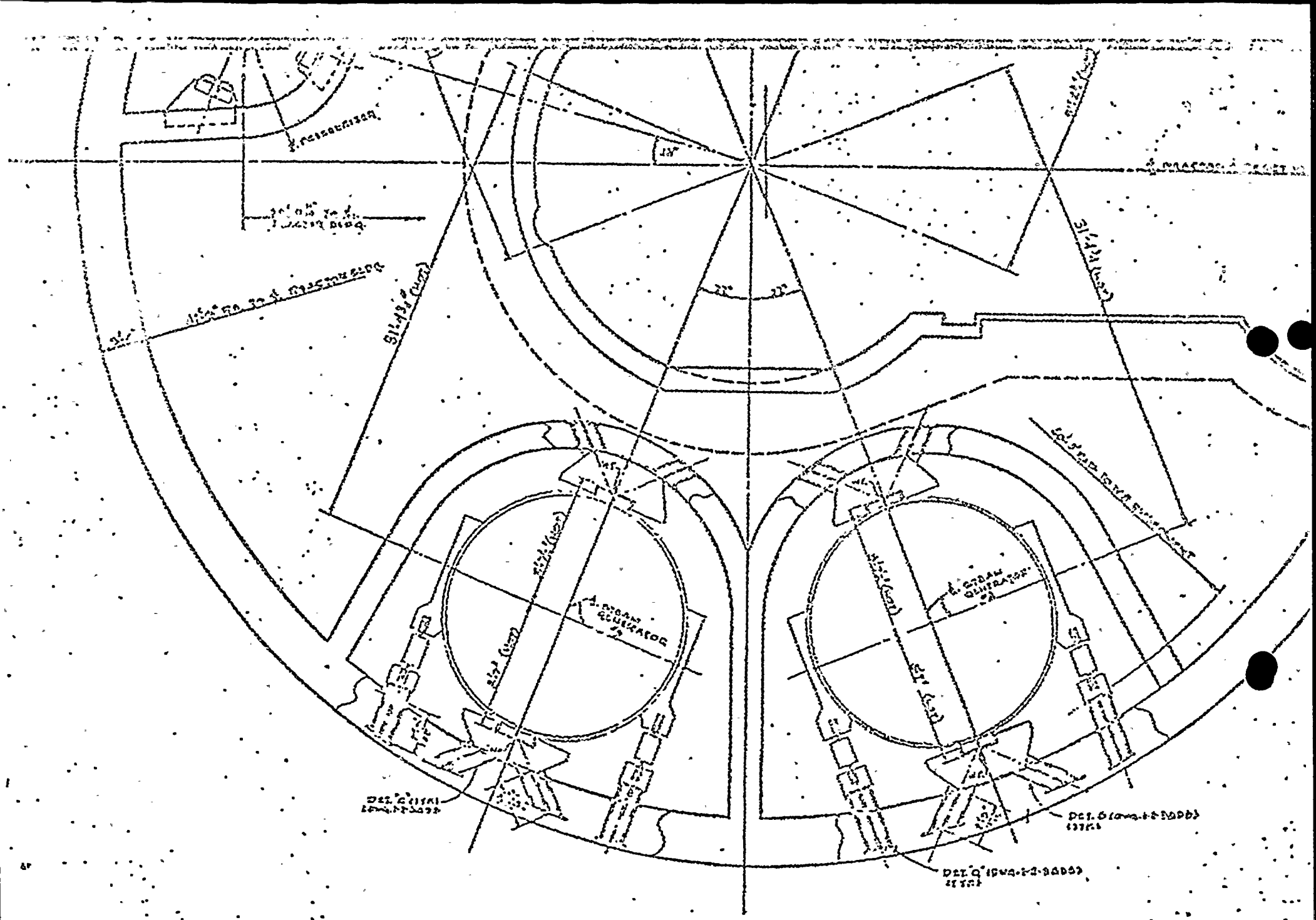

STEAM GENERATOR
TOP LATERAL SUPPORT PLAN

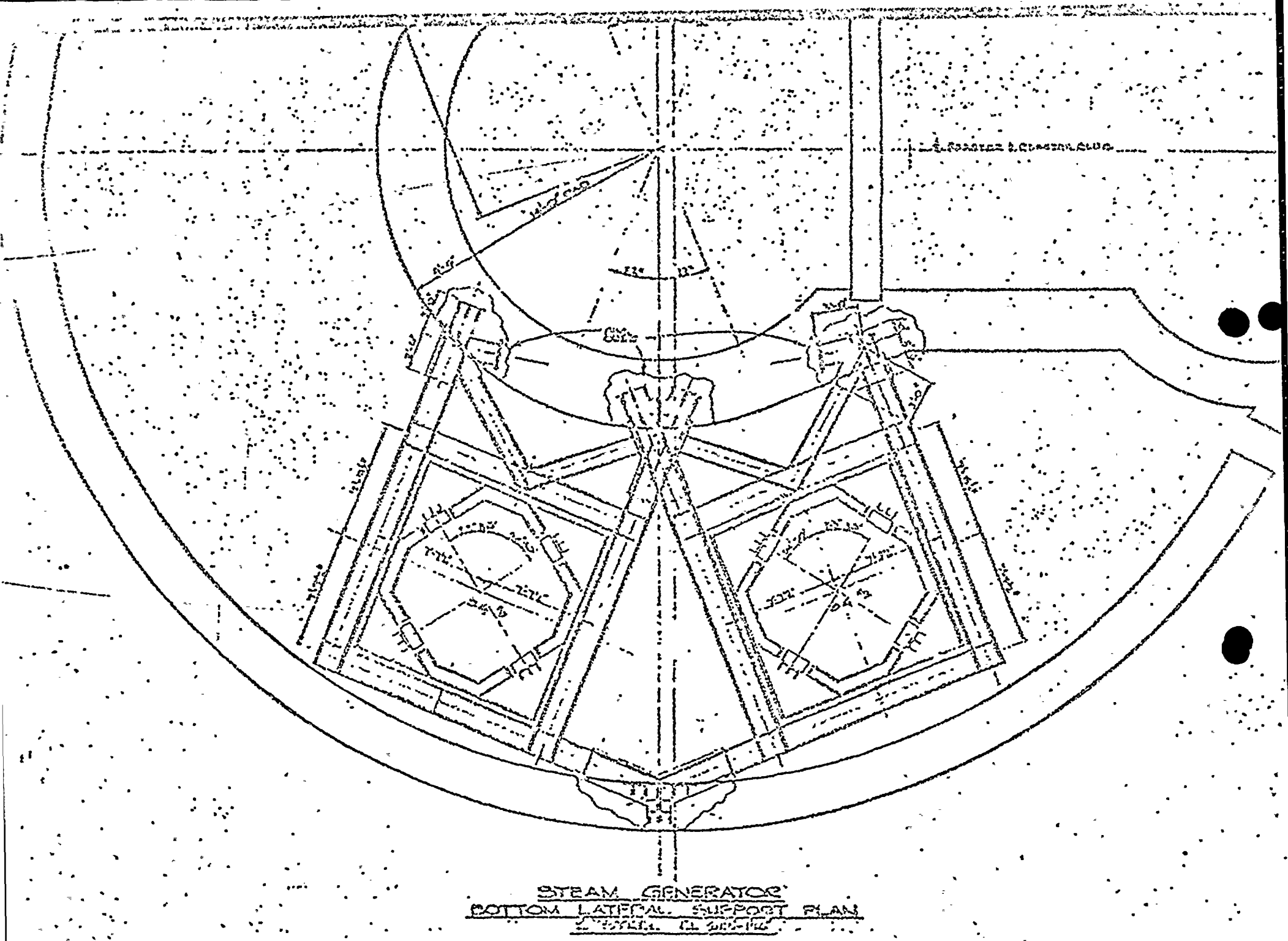

FIGURE 3

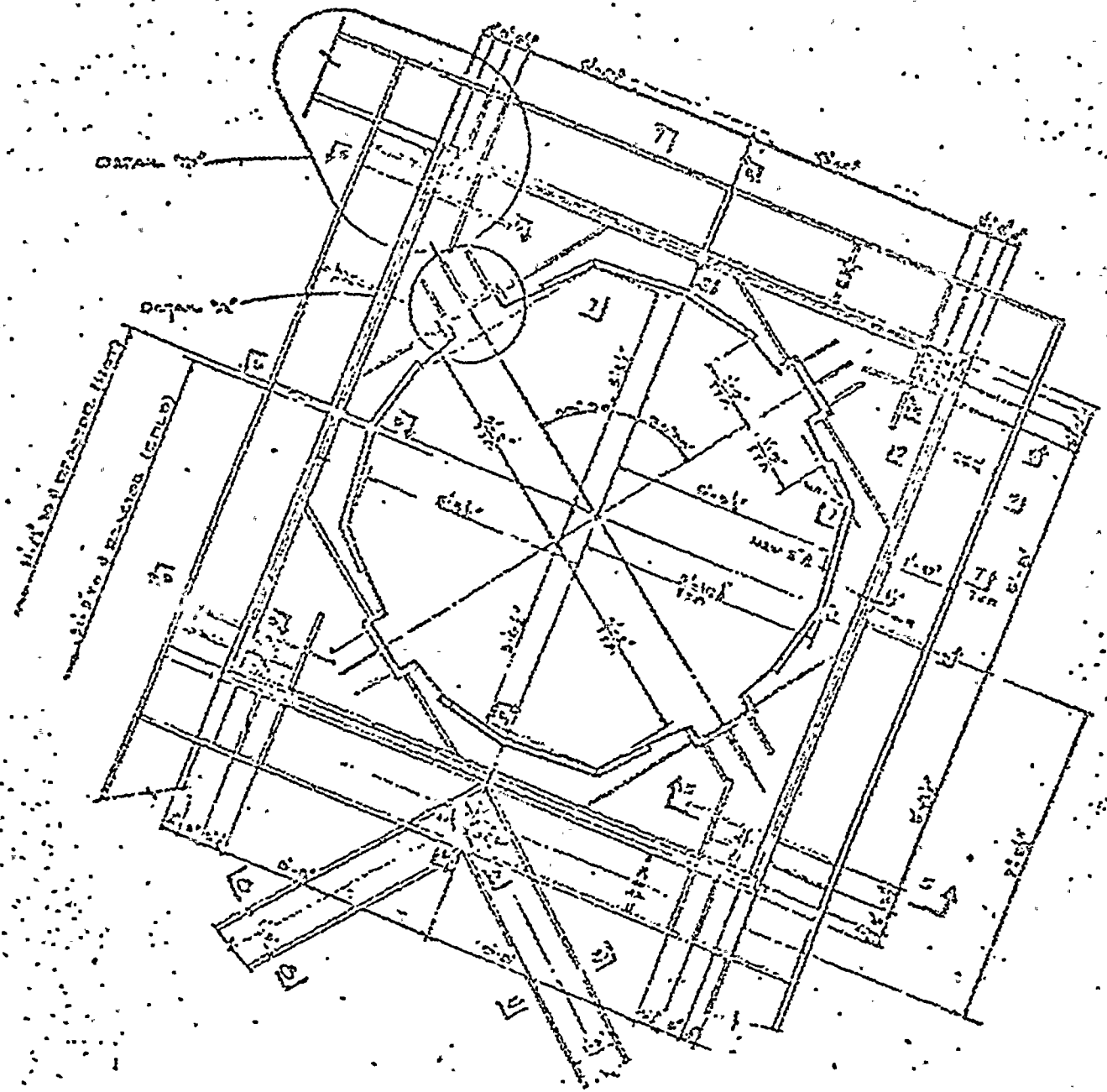

STEAM GENERATOR BOTTOM LATERAL SUPPORT PLAN

FIGURE 4

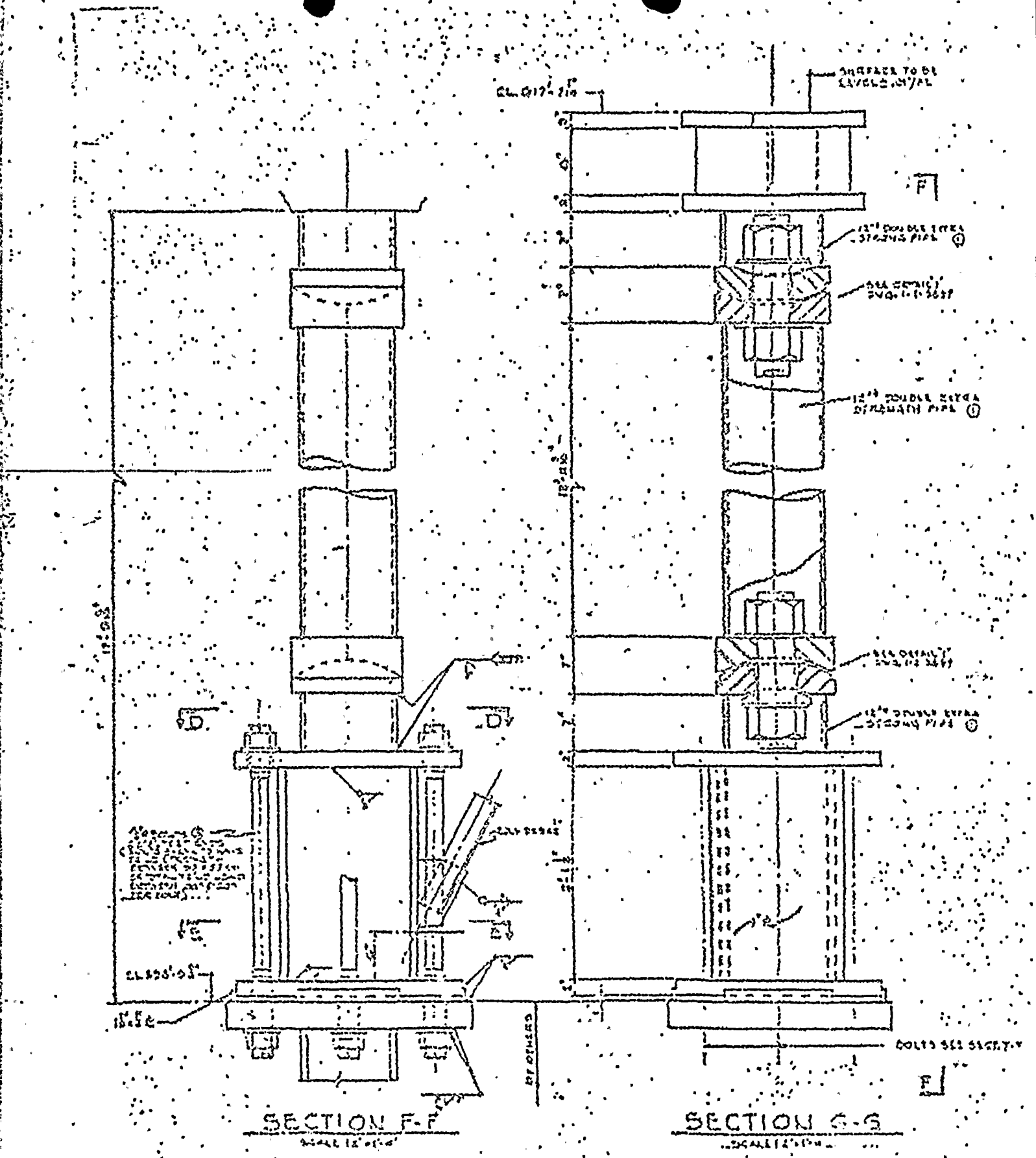

FIGURE 5

NOTE: GAP = I.D. RESTRAINT MINUS O.D. PIPE
DIVIDED BY 2

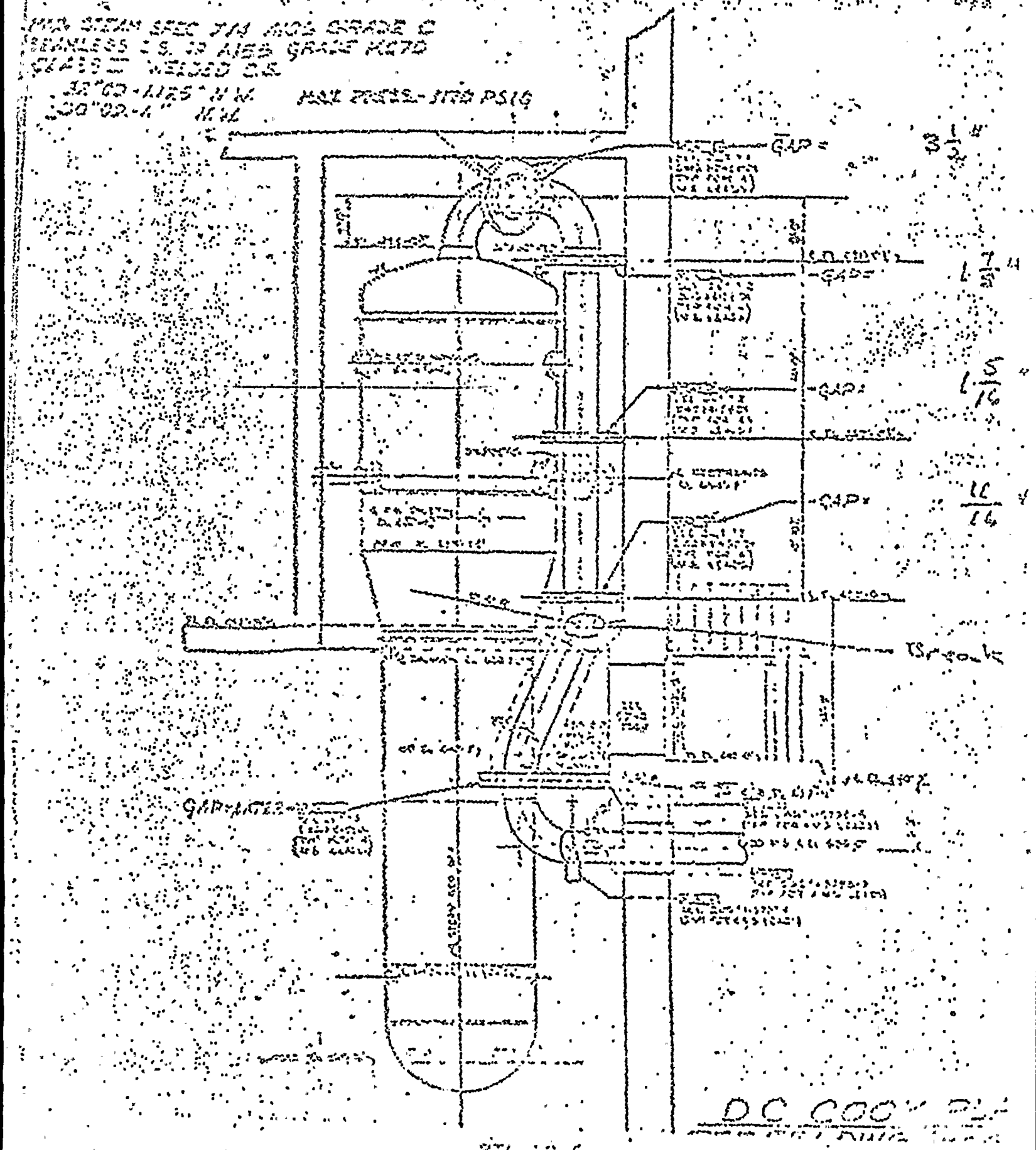

D.C. COOK UNDERFREQUENCY STUDY

In order to analyze the loss of flow transient, some assessment must be made of the frequency decay rate of the system. Any disturbance which creates an instantaneous mismatch between power system load and generation results in a transient frequency deviation from normal system frequency. When load exceeds generation, frequency declines whereas excess generation results in a temporary rise in system frequency. Thus a study was carried out to determine the maximum frequency decay rate which could be expected for the D.C. Cook Plant following a system disturbance which resulted in an excess load situation and a declining system frequency. The following includes a description of the study and discussion of the results and their implications with regard to the analysis of the loss of flow transient.

Description of the Study

American Electric Power (AEP) is a highly integrated system within the East Central Area Reliability (ECAR) region --

one of nine such reliability regions in the country. The ECAR region is an integral part of the large eastern U.S. interconnected systems which have a total generating capability in excess of 400,000 MW. Loss of the largest generator or even the largest plant will cause a generation deficiency of less than one percent of the interconnected system capability. Such disturbances cause only minor deviations in system frequency, on the order of 0.1 Hz or less, at the D.C. Cook Plant and throughout the interconnected systems. Consequently, in order to have frequency excursions with a declining rate of frequency which is of any significance with respect to the analysis of the loss of flow transient, it is necessary to presume that a portion of the system in the vicinity of the D.C. Cook Plant becomes islanded with excess load.

Accordingly, in this analysis an islanded situation was formulated in such a way as to create the maximum excess load within the island which in turn would cause maximum frequency decay rates. Due to the highly integrated character of the transmission network and the nature of the load-generation patterns

existing in the vicinity of the D.C. Cook Plant, it is highly inconceivable that an islanding condition could develop and even more unlikely that the island in this area of the system would be deficient in generation. The "worst case" condition was identified by minimizing the number of transmission lines which would have to be tripped to create an island, while at the same time, encompassing an area of the system sufficiently large to maximize the excess load condition within the island. The degree of excess load was further increased by assuming an extraordinary number of generating units to be out of service within the island area.

The island area selected in this manner resulted in a complex multimachine network with an initial total generation, including the D.C. Cook Units, of 3020 MW and an initial load of 4360 MW or an initial overload condition in excess of 40 percent of the generation. To form an island condition with such extreme overload would require the simultaneous tripping of up to 29 transmission circuits. Islands which could be created by tripping fewer transmission lines would have less load and thus a smaller initial overload resulting in lower frequency decay rates.

The AEP load flow and multimachine transient stability programs were used to carry out this study. Simplified methods of analysis, using a single machine to represent all generation within the island, could be used to determine the average frequency performance and to determine the approximate maximum frequency decay rate. However, because of the importance of the question to be resolved and taking into consideration the extent of the multimachine island area, it was decided to use the most accurate and detailed simulation methods available. Such methods result in the determination of transient frequency performance for each machine. Although all machines tend to follow the same trend in frequency performance, the electrical separation of the machines together with differences in their characteristics can result in small intermachine oscillations and possibly in small differences in the maximum frequency decay rates.

Results and Conclusions

The results of this study indicated that at the inception of this "worst case" islanding situation, the maximum frequency decay rate was less than 2.5 Hz per second and that this rate

gradually decreases. The detailed simulation was carried for 1 - 2 seconds -- sufficiently long to determine maximum frequency decay rates. Taking into account the performance of the generating units and the influence of the underfrequency load shedding program, which is a matter of policy for all systems in the ECAR region, it is expected that the minimum frequency will be 58.5 Hz or higher and that the minimum value will be reached in within a few seconds. The frequency would then gradually return to some value closer to the normal 60 hZ frequency. The nature of this post-disturbance transient depends on the response characteristics of the generating units, the amount of underfrequency load shedding which took place, and the inherent response characteristics of the system loads within the island.

Based on the results of this study, it is concluded that the reactor coolant pumps should not be tripped at the inception of a system disturbance which results in declining frequency conditions. The maximum frequency decay rate and the probable minimum system frequency are well within the criteria established in the Westinghouse report (WCAP-8424, Rev. 1) entitled, "An

Evaluation of Loss of Flow Accidents Caused by Power System Frequency Transients in Westinghouse PWR's". Section 6 - Conclusions and Statement of Position (Pages 6-1 and 6-2) of this WCAP are included herewith as Attachment A. In accordance with these conclusions, the resultant reactor coolant transient would be less severe if the pump drive motors remain connected to the plant auxiliary supply system, thereby enhancing the assurance of maintaining a DNB ratio of greater than 1.3. Furthermore, it should be emphasized that the study was carried out for a "worst case" disturbance which is extremely unlikely to occur -- particularly in such a highly integrated transmisssion system which exists in the vicinity of the D.C. Cook Plant.

SECTION 3

CONCLUSIONS AND STATEMENT OF POSITION

For the electrical system studied on the digital computer (section 4) the following conclusions can be drawn.

- The highest frequency decay rate occurs immediately after the overload is imposed.
- There is a natural unloading effect which tends to limit the maximum possible frequency decay rates.
- Because the maximum frequency decay rate is approximately 3.65 Hz/sec at an attempted 90-percent overload, an upper limit of 5 Hz/sec is a conservative value.
- For the assumptions previously stated concerning the load, the initial actual megawatt overload of the generator and the frequency decay rates are self-limiting. Increasing the attempted overload increases the amount by which the generator is actually loaded up to approximately 90 percent attempted overload. An attempted overload of more than 90 percent will result in a load bus voltage drop sufficient to decrease the overload and the frequency decay rate.
- The voltage regulator action raises the generator terminal voltage and load bus voltage after a few seconds, but not enough to modify the rate of decay adversely.
- An increase in reactive loading on the generators would have an additional load limiting effect. Use of a more realistic power factor than that assumed in this study would demonstrate the conservatism of the results presented herein.
- The effect of operating a unit at very low load levels emphasizes the importance of a uniform distribution of spinning reserve on a power system.

Considering these conclusions and the thermal hydraulic analysis presented in section 5 for a typical Westinghouse four-loop plant, a DNB ratio greater than 1.30 can be assured for credible frequency decay rates with a frequency setpoint greater than 54.3 Hz.

Although this study was performed for a typical Westinghouse four-loop plant on a typical electrical power system, the results form a basis for a position generically applicable to all current Westinghouse plants. This position is intended to enhance the orderly process of analysis, design procurement, testing, licensing, and operation of nuclear power plants.

(1) Frequency decay events up to the maximum credible decay rate (5 Hz/sec) should be accommodated without, at most, a shutdown of the reactor, with the plant capable of returning to operation after the fault is corrected. The event should not cause core damage or generate a more serious accident. Frequency decay transients in excess of 5 Hz/sec are considered highly unlikely; a small amount of fuel damage would be permissible in such an event.

(2) No credit need be taken in the analysis for tripping of the reactor coolant pump circuit breakers on underfrequency. Therefore, there is no reason to include the RCP breaker trip on underfrequency as part of the protection system; this feature may be deleted.

(3) The recommended frequency trip setpoint is 57 Hz for plants with 12-foot 17 x 17 fuel assembly cores (58.2 Hz for 12-foot, 15 x 15 fuel assembly cores). As shown in section 5, a frequency setpoint as low as 54.3 Hz would also meet the underfrequency design basis position, described in (1) above, for the particular plant analyzed. Analyses of individual plants may result in frequency setpoints lower than those mentioned above, and provide better coordination with grid system requirements.

ABSTRACT

This study was conducted to establish a generic position on system and performance requirements for loss of flow caused by electrical system frequency disturbances. Engineering analysis, computer analysis, and literature search were employed to determine a maximum credible frequency decay rate of 5 Hz/sec on a typical electrical grid. The study of frequency decay effects showed that the core of a typical present generation four-loop (3425 MWt) Westinghouse reactor is adequately protected for frequency decay rates up to 5 Hz/sec without taking credit for the reactor coolant pump power supply breaker trip, a feature which may be deleted. The recommended frequency trip setpoint is 57 Hz for plants with 12-foot, 17 x 17 fuel assembly cores, and 58.2 Hz for 12-foot, 15 x 15 fuel assembly cores.

Additional Information In Response To Question 212.32

The reason that the addition of the alarm to indicate loss of RHR shutdown cooling flow was committed to by the first refueling, in the original response, was the need to receive the required electronic equipment. It is anticipated that this equipment should be available within approximately six (6) months and we will install it at the first appropriate opportunity following receipt of the equipment. Until this flow alarm is installed and operational, we shall station a man to monitor cooldown flow indicator IFI-335 continuously while the normal RHR cooldown line is in operation and the head is in place.