IPEC EMERGENCY PLANNING PROCEDURE DISTRIBUTION LIST
IP-EP-AD-13

LOCATION	COPY HOLDER	ADDRESS	NUMBER OF COPIES
IP3 CONTROL ROOM	DELIVERED BY DOCUMENTS	IP3 53FT. CCR	1
IP2 CONTROL ROOM	DELIVERED BY DOCUMENTS	IP2 53FT. CCR	1
IP3 SHIFT MANGER	DELIVERED BY DOCUMENTS	IP3 53FT. ELEVATION	1
IPEC TSC	DELIVERED BY DOCUMENTS	IP2 53FT. ELEVATION	1
IP2 SIMULATOR - CLASSROOM 4	DELIVERED BY DOCUMENTS	IP2 SIMULATOR BLDG.	1
IP2 SIMULATOR - CLASSROOM 5	DELIVERED BY DOCUMENTS	IP2 SIMULATOR BLDG.	3
IP2 SIMULATOR	DELIVERED BY DOCUMENTS	IP2 SIMULATOR BLDG.	1
RESIDENT INSPECTOR	NRC	IP2 88FT. ELEVATION	1
DOC CONTROL DESK	NRC - ROCKVILLE, MD ADDRESS	OFFSITE	1
NRC	STEVE BARR	OFFSITE	1
NRC	DEPUTY DIRECTOR	OFFSITE	1

THE FOLLOWING LOCATIONS ARE *ELECTRONIC DISTRIBUTIONS*

IP3 SIMULATOR	CINDY STELLATO	TRAINING	1
IP3 SIMULATOR BOOTH	CINDY STELLATO	TRAINING	1
IP3 TRAINING CLASSROOMS	CINDY STELLATO	TRAINING	8
IPEC TRAINING	NORVA BUTLER	TRAINING	3
E-PLAN DEPARTMENT	LENORE KNUDSEN	GSB - 2ND FLOOR	1
EOF	LENORE KNUDSEN	GSB - 2ND FLOOR	1
AEOF	LENORE KNUDSEN	GSB - 2ND FLOOR	1

EFFECTIVE
MAY 30 2013
DATE

Ax45
NRR

Entergy

Indian Point Energy Center
Document Control
450 Broadway
Buchanan, NY 10511

CONTROLLED DOCUMENT TRANSMITTAL

TO: DISTRIBUTION

DATE: May 24, 2018

FROM: IPEC DOCUMENT CONTROL -- 3RD FLOOR ADMIN BLDG

PHONE #: 914-254-6835

TRANSMITTAL #: **EP-18-0016**

The Document(s) identified below are forwarded for use. Please review to verify receipt, incorporate the document(s) into your controlled document file, properly disposition superseded, voided, or inactive document(s).

Sign and return the receipt acknowledgement below within ten (10) working days.

AFFECTED DOCUMENT: **IPEC EMERGENCY PLAN PROCEDURES**

DOC #	REV #	TITLE	INSTRUCTIONS

THE FOLLOWING PROCEDURE IS BEING "VOIDED", PLEASE REMOVE FROM YOUR BOOKS:

IP-EP-AD13 REV.19

EFFECTIVE
MAY 30 2018
DATE

RECEIPT OF THE ABOVE LISTED DOCUMENT(S) IS HEREBY ACKNOWLEDGED. I CERTIFY THAT ALL SUPERSEDED, VOID, OR INACTIVE COPIES OF THE ABOVE LISTED DOCUMENT(S) IN MY POSSESSION HAVE BEEN REMOVED FROM USE AND ALL UPDATES HAVE BEEN PERFORMED IN ACCORDANCE WITH EFFECTIVE DATE(S) (IF APPLICABLE) AS SHOWN ON THE DOCUMENT(S).

Doc Control Desk

NAME (PRINT)	SIGNATURE	DATE	COPY LOCATION

IPEC
Emergency Action Level Technical Bases

Prepared by:	Casey Karsten		5/19/18
	Print Name	Signature	Date
Approval:	Frank J. Mitchell		5/21/18
	Print Name	Signature	Date

This procedure excluded from further ENN-LI-100 reviews

Effective Date: May, 30 2018

Table of Contents

Section Page

1.0 PURPOSE 4
2.0 DISCUSSION 4
2.1 Background 4
2.2 Fission Product Barriers 5
2.3 Emergency Classification Based on Fission Product Barrier Degradation 6
2.4 EAL Relationship to EOPs 6
2.5 Symptom-Based vs. Event-Based Approach 7
2.6 EAL Organization 7
2.7 Technical Bases Information 10
2.8 Operating Mode Applicability 12
2.9 Unit Specific Data 13
2.10 Validation of Indications, Reports and Conditions 13
2.11 Planned vs. Unplanned Events 13
2.12 Classifying Transient Events 14
2.13 Imminent EAL Thresholds 14
2.14 Treatment of Multiple Events 15
2.15 Emergency Classification Downgrading and Termination 15
3.0 REFERENCES 16
3.1 Developmental 16
3.2 Implementing 16
3.3 Commitments 16
4.0 DEFINITIONS & ACRONYMS 17
5.0 RESPONSIBILITIES 23
6.0 IPEC-TO-NEI 99-01 EAL CROSSREFERENCE 24

7.0 ATTACHMENTS 28
7.1 Attachment 1 – EAL Bases 29
Category A Abnormal Rad Release / Rad Effluent 29
Category C Cold Shutdown / Refueling System Malfunction 70
Category H Hazards 133
Category S System Malfunction 191
Category E ISFSI 242
Category F Fission Product Barrier Degradation 245
7.2 Attachment 2 Fission Product Barrier Loss / Potential Loss Matrix and Bases 256

Emergency Action Level Technical Bases

1.0 PURPOSE

This document provides an explanation and rationale for each Emergency Action Level (EAL) included in the EAL Upgrade Project for Indian Point Energy Center (IPEC). It should be used to facilitate review of the IPEC EALs and provide historical documentation for future reference. Decision-makers responsible for implementation of EP-IP-120, Emergency Classification, may use this document as a technical reference in support of EAL interpretation. This information may assist the Emergency Director in making classifications, particularly those involving judgment or multiple events. The basis information may also be useful in training, for explaining event classifications to off-site officials, and would facilitate regulatory review and approval of the classification scheme.

The expectation is that emergency classifications are to be made as soon as conditions are present and recognizable for the classification, but within 15 minutes or less in all cases of conditions present. Use of this document for assistance is not intended to delay the emergency classification.

2.0 DISCUSSION

2.1 Background

EALs are the plant-specific indications, conditions or instrument readings that are utilized to classify emergency conditions defined in the Entergy IPEC Emergency Plan.

In 1992, the NRC endorsed NUMARC/NESP-007 "Methodology for Development of Emergency Action Levels" as an alternative to NUREG-0654 EAL guidance.

NEI 99-01 (NUMARC/NESP-007) Revision 5 represents the most recently formally endorsed methodology. Enhancements over earlier revisions included:

- Consolidating the system malfunction initiating conditions and example emergency action levels which address conditions that may be postulated to occur during plant shutdown conditions.
- Initiating conditions and example emergency action levels that fully address conditions that may be postulated to occur at permanently Defueled Stations and Independent Spent Fuel Storage Installations (ISFSIs).
- Simplifying the fission product barrier EAL threshold for a Site Area Emergency.
- Incorporates resolutions to numerous implementation issues including the NRC EAL FAQs.

Using NEI 99-01 Rev. 5, IPEC conducted an EAL implementation upgrade project that produced the EALs discussed herein.

2.2 Fission Product Barriers

Many of the EALs derived from the NEI methodology are fission product barrier based. That is, the conditions that define the EALs are based upon loss or potential loss of one or more of the three fission product barriers. "Loss" and "Potential Loss" signify the relative damage and threat of damage to the barrier. "Loss" means the barrier no longer assures containment of radioactive materials; "potential loss" infers an increased probability of barrier loss and decreased certainty of maintaining the barrier.

The primary fission product barriers are:

A. Fuel Clad (FC): Zirconium tubes which house the ceramic uranium oxide pellets along with the end plugs which are welded into each end of the fuel rods comprise the FC barrier.

B. Reactor Coolant System (RCS): The RCS is comprised of the reactor vessel shell, vessel head, vessel nozzles and penetrations and all primary systems directly connected to the reactor vessel up to the first containment isolation valve.

C. Containment (CNMT): The containment is comprised of the vapor containment structure and all isolation valves required to maintain containment integrity under accident conditions.

2.3 Emergency Classification Based on Fission Product Barrier Degradation

The following criteria are the bases for event classification related to fission product barrier loss or potential loss:

Unusual Event:

Any loss or any potential loss of Containment

Alert:

Any loss or any potential loss of either Fuel Clad or RCS

Site Area Emergency:

Loss or potential loss of any two barriers

General Emergency:

Loss of any two barriers and loss or potential loss of third barrier

2.4 EAL Relationship to EOPs

Where possible, the EALs have been made consistent with and utilize the conditions defined in the IPEC Critical Safety Function Status Trees (CSFSTs). While the symptoms that drive operator actions specified in the CSFSTs are not indicative of all possible conditions which warrant emergency classification, they do define the symptoms, independent of initiating events, for which reactor plant safety and/or fission product barrier integrity are threatened. Where these symptoms are clearly representative of one of the NEI Initiating Conditions, they have been utilized as an EAL. This permits rapid classification of emergency situations based on plant conditions without the need for additional evaluation or event diagnosis. Although some of the EALs presented here are based on conditions defined in the CSFSTs, classification of emergencies using these EALs is not dependent upon Emergency Operating Procedures (EOPs) entry or execution. The EALs can be utilized independently or in conjunction with the EOPs.

2.5 Symptom-Based vs. Event-Based Approach

To the extent possible, the EALs are symptom-based. That is, the action level threshold is defined by values of key plant operating parameters that identify emergency or potential emergency conditions. This approach is appropriate because it allows the full scope of variations in the types of events to be classified as emergencies. However, a purely symptom-based approach is not sufficient to address all events for which emergency classification is appropriate. Particular events to which no predetermined symptoms can be ascribed have also been utilized as EALs since they may be indicative of potentially more serious conditions not yet fully realized.

2.6 EAL Organization

The IPEC EAL scheme includes the following features:

- Division of the EAL set into three broad groups:
  - EALs applicable under <u>all</u> plant operating modes – This group would be reviewed by the EAL-user any time emergency classification is considered.
  - EALs applicable only under <u>hot</u> operating modes – This group would only be reviewed by the EAL-user when the plant is in Hot Shutdown, Startup/Hot Standby, or Power Operations mode.
  - EALs applicable only under <u>cold</u> operating modes – This group would only be reviewed by the EAL-user when the plant is in Cold Shutdown, Refuel or Defueled mode.

  The purpose of the groups is to avoid review of hot condition EALs when the plant is in a cold condition and avoid review of cold condition EALs when the plant is in a hot condition. This approach significantly minimizes the total number of EALs that must be reviewed by the EAL-user for a given plant condition, reduces EAL-user reading burden and, thereby, speeds identification of the EAL that applies to the emergency.

- Within each of the above three groups, assignment of EALs to categories/subcategories – Category and subcategory titles are selected to represent conditions that are operationally significant to the EAL-user. Subcategories are used as necessary to further divide the EALs of a category into logical sets of possible emergency classification thresholds. The proposed IPEC EAL categories/subcategories and their relationship to NEI Recognition Categories are listed below.

EAL Groups, Categories and Subcategories

EAL Group/Category	EAL Subcategory
Any Operating Mode:	
A – Abnormal Rad Release / Rad Effluent	1 – Offsite Rad Conditions 2 – Onsite Rad Conditions 3 – CR/CAS Radiation
H – Hazards	1 – Natural & Destructive Phenomena 2 – Fire or Explosion 3 – Hazardous Gas 4 – Security 5 – Control Room Evacuation 6 – Judgment
E – Independent Spent Fuel Storage Installation (ISFSI)	None
Hot Conditions:	
S – System Malfunction	1 – Loss of AC Power 2 – ATWS / Criticality 3 – Inability to Reach Shutdown Conditions 4 – Instrumentation / Communications 5 – Fuel Clad Degradation 6 – RCS Leakage 7 – Loss of DC Power
F – Fission Product Barrier Degradation	None
Cold Conditions:	
C – Cold Shutdown / Refuel System Malfunction	1 – Loss of AC Power 2 – RPV Level 3 – RCS Temperature 4 – Communications 5 – Inadvertent Criticality 6 – Loss of DC Power

The primary tool for determining the emergency classification level is the EAL classification matrix. The user of the EAL classification matrix may (but is not required to) consult the EAL Technical Bases in order to obtain additional information concerning the EALs under classification consideration. The user should consult Sections 2.7 and 2.8, and Attachments 1 and 2 of this document for such information.

2.7 Technical Bases Information

EAL technical bases are provided in Attachment 1 for each EAL according to EAL group (Any, Hot, Cold), EAL category (A, C, H, S, E and F) and EAL subcategory. A summary explanation of each category and subcategory is given at the beginning of the technical bases discussions of the EALs included in the category. For each EAL, the following information is provided:

<u>Category Letter & Title</u>

<u>Subcategory Number & Title</u>

<u>Initiating Condition (IC)</u>

Site-specific description of the generic IC given in NEI 99-01

<u>EAL Identifier (enclosed in rectangle)</u>

Each EAL is assigned a unique identifier to support accurate communication of the emergency classification to onsite and offsite personnel. Four characters define each EAL identifier:

1. First character (letter): Corresponds to the EAL category as described above (A, C, H, S, E or F)
2. Second character (letter): The emergency classification (G, S, A or U)
3. Third character (number): Initiating Condition (subcategory) number within the given category. Initiating Conditions (subcategories) are sequentially numbered beginning with the number one (1). If a category does not have a subcategory, this character is assigned the number one (1).

4. Fourth character (number): The numerical sequence of the EAL within the EAL subcategory. If the subcategory has only one EAL, it is given the number one (1).

Classification (enclosed in rectangle):

Unusual Event (U), Alert (A), Site Area Emergency (S) or General Emergency (G)

EAL (enclosed in rectangle)

Exact wording of the EAL as it appears in the EAL classification matrix

Mode Applicability

One or more of the following plant operating conditions comprise the mode to which each EAL is applicable: 1 - Power Operation, 2 - Startup, 3 - Hot Standby, 4 - Hot Shutdown, 5 - Cold Shutdown, 6 - Refuel, Defueled, All or N/A - Not Applicable. (See Section 2.8 for operating mode definitions.)

NEI 99-01 Basis:

The basis discussion applicable to the EAL taken from NEI 99-01

IPEC Basis:

Description of the site-specific rationale for the EAL

IPEC Basis Reference(s):

Site-specific source documentation from which the EAL is derived

2.8 Operating Mode Applicability

MODE	TITLE	REACTIVITY CONDITION (k_{eff})	% RATED THERMAL POWER(a)	AVERAGE REACTOR COOLANT TEMPERATURE (°F)
1	Power Operation	≥ 0.99	> 5	NA
2	Startup	≥ 0.99	≤ 5	NA
3	Hot Standby	< 0.99	NA	≥ 350
4	Hot Shutdown(b)	< 0.99	NA	350 > T_{avg} > 200
5	Cold Shutdown(b)	< 0.99	NA	≤ 200
6	Refueling(c)	NA	NA	NA
	Defueled	Reactor vessel contains no irradiated fuel (full core off load during refueling or extended outage)		

(a) Excluding decay heat.
(b) All reactor vessel head closure bolts fully tensioned.
(c) One or more reactor vessel head closure bolts less than fully tensioned.

The plant operating mode that exists at the time that the event occurs (prior to any protective system or operator action is initiated in response to the condition) should be compared to the mode applicability of the EALs. If a lower or higher plant operating mode is reached before the emergency classification is made, the declaration shall be based on the mode that existed at the time the event occurred.

For events that occur in Cold Shutdown or Refueling, escalation is via EALs that have Cold Shutdown or Refueling for mode applicability, even if Hot Shutdown (or a higher mode) is entered during any subsequent heat-up. In particular, the fission product barrier EALs are applicable only to events that initiate in Hot Shutdown or higher.

2.9 Unit Specific Data

The EALs described herein are applicable to both Indian Point Unit 2 and Unit 3 unless specifically stated. Indian Point Unit 2 has been designated the lead plant. In those instances where specific information is different between the two units, the first value shown applies to Unit 2 and the value in parentheses is applicable to Unit 3.

2.10 Validation of Indications, Reports and Conditions

All emergency classifications shall be based upon valid indications, reports or conditions. An indication, report, or condition, is considered to be valid when it is verified by (1) an instrument channel check, or (2) indications on related or redundant indicators, or (3) by direct observation by plant personnel, such that doubt related to the indicator's operability, the condition's existence, or the report's accuracy is removed. Implicit in this definition is the need for timely assessment.

2.11 Planned vs. Unplanned Events

Planned evolutions involve preplanning to address the limitations imposed by the condition, the performance of required surveillance testing, and the implementation of specific controls prior to knowingly entering the condition in accordance with the specific requirements of the site's Technical Specifications. Activities which cause the site to operate beyond that allowed by the site's Technical Specifications, planned or unplanned, may result in an EAL threshold being met or exceeded. Planned evolutions to test, manipulate, repair, perform maintenance or modifications to systems and equipment that result in an EAL value being met or exceeded are not subject to classification and activation requirements as long as the evolution proceeds as planned and is within the operational limitations imposed by the specific operating license. However, these conditions may be subject to the reporting requirements of 10 CFR 50.72.

2.12 Classifying Transient Events

For some events, the condition may be corrected before a declaration has been made. The key consideration in this situation is to determine whether or not further plant damage occurred while the corrective actions were being taken. In some situations, this can be readily determined, in other situations, further analyses (e.g., coolant radiochemistry sampling) may be necessary. Classify the event as indicated and terminate the emergency once assessment shows that there were no consequences from the event and other termination criteria are met.

Existing guidance for classifying transient events addresses the period of time of event recognition and classification (15 minutes). However, in cases when EAL declaration criteria may be met momentarily during the normal expected response of the plant, declaration requirements should not be considered to be met when the conditions are a part of the designed plant response, or result from appropriate Operator actions.

There may be cases in which a plant condition that exceeded an EAL was not recognized at the time of occurrence but is identified well after the condition has occurred (e.g., as a result of routine log or record review), and the condition no longer exists. In these cases, an emergency should not be declared.

Reporting requirements of 10 CFR 50.72 are applicable and the guidance of NUREG-1022, Event Reporting Guidelines 10 CFR 50.72 and 50.73, should be applied.

2.13 Imminent EAL Thresholds

Although the majority of the EALs provide very specific thresholds, the Emergency Director must remain alert to events or conditions that lead to the conclusion that exceeding the EAL threshold is imminent. If, in the judgment of the Emergency Director, an imminent situation is at hand, the classification should be made as if the threshold has been exceeded. While this is particularly prudent at the higher emergency classes (the early classification may permit more effective implementation of protective measures), it is nonetheless applicable to all emergency classes.

2.14 Treatment Of Multiple Events

When multiple simultaneous events occur, the emergency classification level is based on the highest EAL reached. For example, two Alerts remain in the Alert category. Or, an Alert and a Site Area Emergency is a Site Area Emergency.

2.15 Emergency Classification Downgrading and Termination

Another important aspect of usable EAL guidance is the consideration of what to do when the risk posed by an emergency is clearly decreasing. While event downgrading to lower emergency classification levels may have merit under certain circumstances it is the policy at IPEC that emergency classifications be directly terminated rather than downgraded and transitioned into the recovery phase per implementing procedure guidance.

3.0 REFERENCES

3.1 Developmental

3.1.1 NEI 99-01 Revision 5, Methodology for Development of Emergency Action Levels, February 2008 (ADAMS Accession Number ML080450149)

3.1.2 NRC Regulatory Issue Summary (RIS) 2003-18, Supplement 2, Use of Nuclear Energy Institute (NEI) 99-01, Methodology for Development of Emergency Action Levels Revision 4, Dated January 2003 (December 12, 2005)

3.2 Implementing

3.2.1 EP-IP-120 Emergency Classification

3.2.2 EAL Comparison Matrix

3.2.3 EAL Classification Matrix

3.3 Commitments

None

4.0 DEFINITIONS & ACRONYMS

Definitions

Affecting Safe Shutdown

Event in progress has adversely affected functions that are necessary to bring the plant to and maintain it in the applicable hot or cold shutdown condition. Plant condition applicability is determined by Technical Specification LCOs in effect.

Example 1: Event causes damage that results in entry into an LCO that requires the plant to be placed in hot shutdown. Hot shutdown is achievable, but cold shutdown is not. This event is not "affecting safe shutdown."

Example 2: Event causes damage that results in entry into an LCO that requires the plant to be placed in cold shutdown. Hot shutdown is achievable, but cold shutdown is not. This event is "affecting safe shutdown."

Bomb

Refers to an explosive device suspected of having sufficient force to damage plant systems or structures.

Civil Disturbance

A group of people violently protesting station operations or activities at the site

Confinement Boundary

Is the barrier(s) between areas containing radioactive substances and the environment

Containment Closure

The site specific procedurally defined actions taken to secure containment and its associated structures, systems, and components as a functional barrier to fission product release under existing plant conditions. As applied to IPEC, Containment Closure exists when the requirements of Section 3.9.3 of Technical Specifications are met.

Explosion

Is a rapid, violent, unconfined combustion, or catastrophic failure of pressurized/energized equipment that imparts energy of sufficient force to potentially damage permanent structures, systems, or components.

Extortion

Is an attempt to cause an action at the station by threat of force.

Faulted

In a steam generator, the existence of secondary side leakage that results in an uncontrolled drop in steam generator pressure or the steam generator being completely depressurized

Fire

Combustion characterized by heat and light. Sources of smoke such as slipping drive belts or overheated electrical equipment do not constitute fires. Observation of flame is preferred but is NOT required if large quantities of smoke and heat are observed.

Hostage

Person(s) held as leverage against the station to ensure that demands will be met by the station.

Hostile Action

An act toward IPEC or its personnel that includes the use of violent force to destroy equipment, take hostages, and/or intimidate the licensee to achieve an end. This includes attack by air, land, or water using guns, explosives, projectiles, vehicles, or other devices used to deliver destructive force. Other acts that satisfy the overall intent may be included.

Hostile Action should not be construed to include acts of civil disobedience or felonious acts that are not part of a concerted attack on IPEC. Non-terrorism-based EALs should be used to address such activities, (e.g., violent acts between individuals in the owner controlled area).

Hostile Force

One or more individuals who are engaged in a determined assault, overtly or by stealth and deception, equipped with suitable weapons capable of killing, maiming, or causing destruction.

Imminent

Mitigation actions have been ineffective, additional actions are not expected to be successful, and trended information indicates that the event or condition will occur. Where imminent timeframes are specified, they shall apply.

Inoperable

Not able to perform its intended function

Intruder

Person(s) present in a specified area without authorization.

Intrusion

The act of entering without authorization Discovery of a bomb in a specified area is indication of intrusion into that area by a hostile force.

Independent Spent Fuel Storage Installation (ISFSI)

A complex that is designed and constructed for the interim storage of spent nuclear fuel and other radioactive materials associated with spent fuel storage.

Normal Plant Operations

Activities at the plant site associated with routine testing, maintenance, or equipment operations, in accordance with normal operating or administrative procedures. Entry into abnormal or emergency operating procedures, or deviation from normal security or radiological controls posture, is a departure from Normal Plant Operations.

Projectile

An object directed toward a NPP that could cause concern for its continued operability, reliability, or personnel safety.

Protected Area

An area which normally encompasses all controlled areas within the security protected area fence as depicted in Drawing 931-F-15343 Plot Plan Unit 1, 2 & 3.

Ruptured

In a steam generator, existence of primary-to-secondary leakage of a magnitude sufficient to require or cause a reactor trip and safety injection

Sabotage

Deliberate damage, misalignment, or miss-operation of plant equipment with the intent to render the equipment inoperable. Equipment found tampered with or damaged due to malicious mischief may not meet the definition of Sabotage until this determination is made by security supervision.

Security Condition

Any security event as listed in the approved security contingency plan that constitutes a threat/compromise to site security, threat/risk to site personnel, or a potential degradation to the level of safety of the plant. A security condition does not involve a hostile action.

Significant Transient

An unplanned event involving any of the following:

- Runback > 25% thermal power
- Electrical load rejection > 25% full electrical load
- Reactor scram
- ECCS injection
- Thermal power oscillations > 10%

Strike Action

Work stoppage within the Protected Area by a body of workers to enforce compliance with demands made on IPEC. The strike action must threaten to interrupt Normal Plant Operations.

Unisolable

A breach or leak that cannot be promptly isolated.

Unplanned

A parameter change or an event that is not the result of an intended evolution and requires corrective or mitigative actions.

Valid

An indication, report, or condition, is considered to be valid when it is verified by (1) an instrument channel check, or (2) indications on related or redundant indicators, or (3) by direct observation by plant personnel, such that doubt related to the indicator's operability, the condition's existence, or the report's accuracy is removed. Implicit in this definition is the need for timely assessment.

Visible Damage

Damage to equipment or structure that is readily observable without measurements, testing, or analysis. Damage is sufficient to cause concern regarding the continued operability or reliability of affected safety structure, system, or component. Example damage includes: deformation due to heat or impact, denting, penetration, rupture, cracking, paint blistering. Surface blemishes (e.g., paint chipping, scratches) should not be included.

Acronyms

AC.....Alternating Current
APRM.....Average Power Range Meter
ATWS.....Anticipated Transient Without Scram
BWR.....Boiling Water Reactor
CAS.....Central Alarm Station
CDE.....Committed Dose Equivalent
CFR.....Code of Federal Regulations
DC.....Direct Current
EAL.....Emergency Action Level
ECCS.....Emergency Core Cooling System
ECL.....Emergency Classification Level
EDG.....Emergency Diesel Generator
ELEV.....Elevation
ENS.....Emergency Notification System
EOF.....Emergency Operations Facility
EOP.....Emergency Operating Procedure
EPA.....Environmental Protection Agency

EPG ..... Emergency Procedure Guideline
EPIP ..... Emergency Plan Implementing Procedure
ESF ..... Engineered Safety Feature
FAA ..... Federal Aviation Administration
FBI ..... Federal Bureau of Investigation
FEMA ..... Federal Emergency Management Agency
FSAR ..... Final Safety Analysis Report
GE ..... General Emergency
IC ..... Initiating Condition
IDLH ..... Immediately Dangerous to Life and Health
IPEC ..... Indian Point Energy Center
IPEEE ..... Individual Plant Examination of External Events (Generic Letter 88-20)
ISFSI ..... Independent Spent Fuel Storage Installation
Keff ..... Effective Neutron Multiplication Factor
LCO ..... Limiting Condition of Operation
LER ..... Licensee Event Report
LOCA ..... Loss of Coolant Accident
LWR ..... Light Water Reactor
MSIV ..... Main Steam Isolation Valve
MSL ..... Main Steam Line
mR ..... milliRoentgen
MW ..... Megawatt
NEI ..... Nuclear Energy Institute
NESP ..... National Environmental Studies Project
NPP ..... Nuclear Power Plant
NRC ..... Nuclear Regulatory Commission
NSSS ..... Nuclear Steam Supply System
NORAD ..... North American Aerospace Defense Command
OBE ..... Operating Basis Earthquake
OCA ..... Owner Controlled Area
ODCM ..... Off-site Dose Calculation Manual
PRA/PSA ..... Probabilistic Risk Assessment / Probabilistic Safety Assessment
PWR ..... Pressurized Water Reactor
PSIG ..... Pounds per Square Inch Gauge
R ..... Roentgen

RCP ..... Reactor Coolant Pump
RCS ..... Reactor Coolant System
rem ..... Roentgen Equivalent Man
RPS ..... Reactor Protection System
RPV ..... Reactor Pressure Vessel
SAE ..... Site Area Emergency
SBO ..... Station Blackout
SFP ..... Spent Fuel Pit
SPDS ..... Safety Parameter Display System
SRO ..... Senior Reactor Operator
TEDE ..... Total Effective Dose Equivalent
TAF ..... Top of Active Fuel
TC ..... Thermocouple
TSC ..... Technical Support Center
UE ..... Unusual Event

5.0 RESPONSIBILITIES

5.1 Emergency Planning Manager

The Emergency Planning Manager shall periodically evaluate the need to update and revise the EAL technical bases due to:

A. Revisions to EALs

B. Changes in plant configuration or design

B. Changes in system set-points or values reference in the EALs

C. Operating experience and interpretation clarifications

Any revision to the wording of one or more EALs shall require a revision to this procedure and shall be reviewed and approved as part of the EAL change.

5.2. EAL End-Users

Emergency Response Organization members responsible for the evaluation of EALs and/or emergency classification shall become familiar with the contents of this document. This document may be used to assist personnel responsible for emergency classification in interpreting the intent of EALs.

6.0 IPEC-TO-NEI 99-01 EAL/PAGE CROSSREFERENCE

This cross-reference is provided to facilitate association and location of an IPEC EAL within the NEI 99-01 IC/EAL identification scheme with page number. Further information regarding the development of the IPEC EALs based on the NEI guidance can be found in the EAL Comparison Matrix.

IPEC	NEI 99-01		
EAL	**IC**	**Example EAL**	**PAGE #**
AU1.1	AU1	1	30
AU1.2	AU1	1	33
AU1.3	AU1	3	36
AU2.1	AU2	1	57
AU2.2	AU2	2	60
AA1.1	AA1	1	38
AA1.2	AA1	1	40
AA1.3	AA1	3	43
AA2.1	AA2	1	62
AA2.2	AA2	2	64
AA3.1	AA3	1	66
AS1.1	AS1	1	45
AS1.2	AS1	2	47
AS1.3	AS1	4	49
AG1.1	AG1	1	51
AG1.2	AG1	2	53
AG1.3	AG1	4	55

IPEC	NEI 99-01		
EAL	**IC**	**Example EAL**	**PAGE #**
CU1.1	CU3	1	70
CU2.1	CU1	1, 2	75
CU2.2	CU2	1	77
CU2.3	CU2	2	81
CU3.1	CU4	1	117
CU3.2	CU4	2	119
CU4.1	CU6	1, 2	127
CU5.1	CU8	1	130
CU6.1	CU7	1	131
CA1.1	CA3	1	73
CA2.1	CA1	1, 2	85
CA3.1	CA4	1, 2, 3	123
CS2.1	CS1	1	89
CS2.2	CS1	2	92
CS2.3	CS1	3	95
CG2.1	CG1	1	102
CG2.2	CG1	2	108
FU1.1	FU1	1	250
FA1.1	FA1	1	251
FS1.1	FS1	1	252
FG1.1	FG1	1	254
HU1.1	HU1	1	135

IPEC	NEI 99-01		
EAL	**IC**	**Example EAL**	**PAGE #**
HU1.2	HU1	2	137
HU1.3	HU1	4	139
HU1.4	HU1	3	141
HU1.5	HU1	5	143
HU2.1	HU2	1	158
HU2.2	HU2	2	160
HU3.1	HU3	1	164
HU3.2	HU3	2	166
HU4.1	HU4	1, 2, 3	170
HU6.1	HU5	1	183
HA1.1	HA1	1	145
HA1.2	HA1	2	147
HA1.3	HA1	5	149
HA1.4	HA1	4	151
HA1.5	HA1	3	153
HA1.6	HA1	6	155
HA2.1	HA2	1	162
HA3.1	HA3	1	168
HA4.1	HA4	1, 2	173
HA5.1	HA5	1	180
HA6.1	HA6	1	185
HS4.1	HS4	1	176

IPEC	NEI 99-01		
EAL	**IC**	**Example EAL**	**PAGE #**
HS5.1	HS2	1	181
HS6.1	HS3	1	187
HG6.1	HG2	1	189
SU1.1	SU1	1	194
SU2.1	SU8	2	211
SU3.1	SU2	1	221
SU4.1	SU3	1	223
SU4.2	SU6	1, 2	225
SU5.1	SU4	2	235
SU5.2			237
SU6.1	SU5	1, 2	239
SA1.1	SA5	1	198
SA2.1	SA2	1	212
SA4.1	SA4	1	228
SS1.1	SS1	1	201
SS2.1	SS2	1	215
SS4.1	SS6	1	232
SS7.1	SS3	1	241
SG1.1	SG1	1	205
SG2.1	SG2	1	218
EU1.1	E-HU1	1	244

7.0 ATTACHMENTS

7.1 Attachment 1, EAL Bases

7.2 Attachment 2, Fission Product Barrier Loss / Potential Loss Matrix and Basis

Category A – Abnormal Rad Release / Rad Effluent

EAL Group: ANY (EALs in this category are applicable to any plant condition, hot or cold.)

Many EALs are based on actual or potential degradation of fission product barriers because of the elevated potential for offsite radioactivity release. Degradation of fission product barriers though is not always apparent via non-radiological symptoms. Therefore, direct indication of elevated radiological effluents or area radiation levels are appropriate symptoms for emergency classification.

At lower levels, abnormal radioactivity releases may be indicative of a failure of containment systems or precursors to more significant releases. At higher release rates, offsite radiological conditions may result which require offsite protective actions. Elevated area radiation levels in plant may also be indicative of the failure of containment systems or preclude access to plant vital equipment necessary to ensure plant safety.

Events of this category pertain to the following subcategories:

1. Offsite Rad Conditions

Direct indication of effluent radiation monitoring systems provides a rapid assessment mechanism to determine releases in excess of classifiable limits. Projected offsite doses, actual offsite field measurements or measured release rates via sampling indicate doses or dose rates above classifiable limits.

2. Onsite Rad Conditions & Irradiated Fuel Events

Sustained general area radiation levels in excess of those indicating loss of control of radioactive materials or those levels which may preclude access to vital plant areas also warrant emergency classification.

3. CR/CAS Radiation

Sustained general area radiation levels in excess of 15 mR/hr. may preclude access to areas requiring continuous occupancy also warrant emergency classification.

Attachment 1 – Emergency Action Level Bases

Category: A – Abnormal Rad Release / Rad Effluent

Subcategory: 1 – Offsite Rad Conditions

Initiating Condition: **Any** release of gaseous or liquid radioactivity to the environment greater than 2 times the Offsite Dose Calculation Manual (ODCM) limits for ≥ 60 min.

EAL:

AU1.1 Unusual Event

Any valid gaseous monitor reading > Table A-1 column "UE" for ≥ 60 min. (Note 2)

Table A-1 Effluent Monitor Classification Thresholds

Monitor		GE	SAE	Alert	UE
Gaseous	R-27	7.5 E+07 µCi/sec (2.3 E+00 µCi/cc)	7.5 E+06 µCi/sec (2.3 E-01 µCi/cc)	1.4 E+06 µCi/sec (4.2 E-02 µCi/cc)	2.6 E+05 µCi/sec (8.0 E-03 µCi/cc)
Gaseous	R-44 [14]	N/A	N/A	4.2 E-02 µCi/cc	8.0 E-03 µCi/cc
Liquid	R-54 [18]	N/A	N/A	4.0E-02 µCi/cc	2.5E-03 µCi/cc
Liquid	R-49 [19]	N/A	N/A	5.8E-02 µCi/cc	5.8E-04 µCi/cc

Note 2: The Emergency Director should not wait until the applicable time has elapsed, but should declare the event as soon as it is determined that the release duration has exceeded, or will likely exceed, the applicable time. In the absence of data to the contrary, assume that the release duration has exceeded the applicable time if an ongoing release is detected and the release start time is unknown.

Mode Applicability:

All

NEI 99-01 Basis:

The Emergency Director should not wait until the applicable time has elapsed, but should declare the event as soon as it is determined that the condition will likely exceed the applicable time.

This EAL addresses a potential decrease in the level of safety of the plant as indicated by a radiological release that exceeds regulatory commitments for an extended period of time.

Nuclear power plants incorporate features intended to control the release of radioactive effluents to the environment. Further, there are administrative controls established to prevent unintentional releases, or control and monitor intentional releases. The occurrence of extended, uncontrolled radioactive releases to the environment is indicative of a degradation in these features and/or controls.

The release rate multiples are specified in EALs AU1.1 and AA1.1 only to distinguish between non-emergency conditions, and from each other. While these multiples obviously correspond to an off-site dose or dose rate, the emphasis in classifying these events is the degradation in the level of safety of the plant, not the magnitude of the associated dose or dose rate.

This EAL addresses radioactivity releases, that for whatever reason, cause effluent radiation monitor readings to exceed the threshold identified.

This EAL is intended for sites that have established effluent monitoring on non-routine release pathways for which a discharge permit would not normally be prepared.

IPEC Basis:

Gaseous releases in excess of two times the site ODCM (ref. 1) instantaneous limits that continue for 60 minutes or longer represent an uncontrolled situation and hence, a potential degradation in the level of safety. The final integrated dose (which is very low in the Unusual Event emergency class) is not the primary concern here; it is the degradation in plant control implied by the fact that the release was not isolated within 60 minutes.

The values shown for each monitor represents two times the calculated ODCM release rates (ref. 2).

IPEC Basis Reference(s):

1. IPEC Offsite Dose Calculation Manual
2. EP-EALCALC-IPEC-1001, Revision 2, Radiological Gaseous Effluent EAL Values

Attachment 1 – Emergency Action Level Bases

Category: A – Abnormal Rad Release / Rad Effluent

Subcategory: 1 – Offsite Rad Conditions

Initiating Condition: **Any** release of gaseous or liquid radioactivity to the environment greater than 2 times the Offsite Dose Calculation Manual (ODCM) limits for ≥ 60 min.

EAL:

AU1.2 Unusual Event

Any valid liquid monitor reading > Table A-1 column "UE" for ≥ 60 min. (Note 2)

Table A-1 Effluent Monitor Classification Thresholds

Monitor		GE	SAE	Alert	UE
Gaseous	R-27	7.5 E+07 µCi/sec (2.3 E+00 µCi/cc)	7.5 E+06 µCi/sec (2.3 E-01 µCi/cc)	1.4 E+06 µCi/sec (4.2 E-02 µCi/cc)	2.6 E+05 µCi/sec (8.0 E-03 µCi/cc)
Gaseous	R-44 [14]	N/A	N/A	4.2 E-02 µCi/cc	8.0 E-03 µCi/cc
Liquid	R-54 [18]	N/A	N/A	4.0E-02 µCi/cc	2.5E-03 µCi/cc
Liquid	R-49 [19]	N/A	N/A	5.8E-02 µCi/cc	5.8E-04 µCi/cc

Note 2: The Emergency Director should not wait until the applicable time has elapsed, but should declare the event as soon as it is determined that the release duration has exceeded, or will likely exceed, the applicable time. In the absence of data to the contrary, assume that the release duration has exceeded the applicable time if an ongoing release is detected and the release start time is unknown.

Mode Applicability:

All

NEI 99-01 Basis:

The Emergency Director should not wait until the applicable time has elapsed, but should declare the event as soon as it is determined that the condition will likely exceed the applicable time.

This EAL addresses a potential decrease in the level of safety of the plant as indicated by a radiological release that exceeds regulatory commitments for an extended period of time.

Nuclear power plants incorporate features intended to control the release of radioactive effluents to the environment. Further, there are administrative controls established to prevent unintentional releases, or control and monitor intentional releases. The occurrence of extended, uncontrolled radioactive releases to the environment is indicative of a degradation in these features and/or controls.

The release rate multiples are specified in EALs AU1.2 and AA1.2 only to distinguish between non-emergency conditions, and from each other. While these multiples obviously correspond to an off-site dose or dose rate, the emphasis in classifying these events is the degradation in the level of safety of the plant, not the magnitude of the associated dose or dose rate.

This EAL addresses radioactivity releases, that for whatever reason, cause effluent radiation monitor readings to exceed the threshold identified.

This EAL is intended for sites that have established effluent monitoring on non-routine release pathways for which a discharge permit would not normally be prepared.

IPEC Basis:

Liquid releases in excess of two times the site ODCM (ref. 1) instantaneous limits that continue for 60 minutes or longer represent an uncontrolled situation and hence, a potential degradation in the level of safety. The final integrated dose (which is very low in the Unusual Event emergency class) is not the primary concern here; it is the degradation in plant control implied by the fact that the release was not isolated within 60 minutes.

The values shown for each monitor represents two times the calculated monitor alarm set-points which are set in accordance with the ODCM (ref. 2).

IPEC Basis Reference(s):

1. IPEC Offsite Dose Calculation Manual
2. Letter from S. Sandike to L. Glander dated Nov.15, 2010

Attachment 1 – Emergency Action Level Bases

Category: A – Abnormal Rad Release / Rad Effluent

Subcategory: 1 – Offsite Rad Conditions

Initiating Condition: **Any** release of gaseous or liquid radioactivity to the environment greater than 2 times the Offsite Dose Calculation Manual (ODCM) limits for ≥ 60 min.

EAL:

AU1.3 Unusual Event

Confirmed sample analyses for gaseous or liquid releases indicate concentrations or release rates > 2 x ODCM limits for ≥ 60 min. (Note 2)

Note 2: The Emergency Director should not wait until the applicable time has elapsed, but should declare the event as soon as it is determined that the release duration has exceeded, or will likely exceed, the applicable time. In the absence of data to the contrary, assume that the release duration has exceeded the applicable time if an ongoing release is detected and the release start time is unknown.

Mode Applicability:

All

NEI 99-01 Basis:

The Emergency Director should not wait until the applicable time has elapsed, but should declare the event as soon as it is determined that the condition will likely exceed the applicable time.

This EAL addresses a potential decrease in the level of safety of the plant as indicated by a radiological release that exceeds regulatory commitments for an extended period of time.

Nuclear power plants incorporate features intended to control the release of radioactive effluents to the environment. Further, there are administrative controls established to prevent unintentional releases, or control and monitor intentional releases. The occurrence of extended, uncontrolled radioactive releases to the environment is indicative of a degradation in these features and/or controls.

The ODCM multiples are specified in AU1.3 and AA1.3 only to distinguish between non-emergency conditions, and from each other. While these multiples obviously correspond to an off-site dose or dose rate, the emphasis in classifying these events is the degradation in the level of safety of the plant, not the magnitude of the associated dose or dose rate.

Releases should not be prorated or averaged. For example, a release exceeding 4x ODCM for 30 minutes does not meet the threshold.

This EAL includes any release for which a radioactivity discharge permit was not prepared, or a release that exceeds the conditions (e.g., minimum dilution flow, maximum discharge flow, alarm set-points, etc.) on the applicable permit.

This EAL addresses uncontrolled releases that are detected by sample analyses, particularly on unmonitored pathways, e.g., spills of radioactive liquids into storm drains, heat exchanger leakage in river water systems, etc.

IPEC Basis

Confirmed sample analyses in excess of two times the site Offsite Dose Calculation Manual (ODCM) (ref. 1) instantaneous limits that continue for 60 minutes or longer represent an uncontrolled situation and hence, a potential degradation in the level of safety. The final integrated dose (which is very low in the Unusual Event emergency class) is not the primary concern here; it is the degradation in plant control implied by the fact that the release was not isolated within 60 minutes.

IPEC Basis Reference(s):

1. IPEC, Offsite Dose Calculation Manual

Attachment 1 – Emergency Action Level Bases

Category: A – Abnormal Rad Release / Rad Effluent

Subcategory: 1 – Offsite Rad Conditions

Initiating Condition: **Any** release of gaseous or liquid radioactivity to the environment that exceeds significant multiples of the Offsite Dose Calculation Manual (ODCM) limits for 15 minutes or longer

EAL:

AA1.1 Alert

Any valid gaseous monitor reading > Table A-1 column "Alert" for ≥ 15 min. (Note 2)

Table A-1 Effluent Monitor Classification Thresholds

Monitor		GE	SAE	Alert	UE
Gaseous	R-27	7.5 E+07 µCi/sec (2.3 E+00 µCi/cc)	7.5 E+06 µCi/sec (2.3 E-01 µCi/cc)	1.4 E+06 µCi/sec (4.2 E-02 µCi/cc)	2.6 E+05 µCi/sec (8.0 E-03 µCi/cc)
Gaseous	R-44 [14]	N/A	N/A	4.2 E-02 µCi/cc	8.0 E-03 µCi/cc
Liquid	R-54 [18]	N/A	N/A	4.0E-02 µCi/cc	2.5E-03 µCi/cc
Liquid	R-49 [19]	N/A	N/A	5.8E-02 µCi/cc	5.8E-04 µCi/cc

Note 2: The Emergency Director should not wait until the applicable time has elapsed, but should declare the event as soon as it is determined that the release duration has exceeded, or will likely exceed, the applicable time. In the absence of data to the contrary, assume that the release duration has exceeded the applicable time if an ongoing release is detected and the release start time is unknown.

Mode Applicability:

All

NEI 99-01 Basis:

The Emergency Director should not wait until the applicable time has elapsed, but should declare the event as soon as it is determined that the condition will likely exceed the applicable time.

This EAL addresses an actual or substantial potential decrease in the level of safety of the plant as indicated by a radiological release that exceeds regulatory commitments for an extended period of time.

Nuclear power plants incorporate features intended to control the release of radioactive effluents to the environment. Further, there are administrative controls established to prevent unintentional releases, or control and monitor intentional releases. The occurrence of extended, uncontrolled radioactive releases to the environment is indicative of a degradation in these features and/or controls.

The release rate multiples are specified in AU1.1 and AA1.1 only to distinguish between non-emergency conditions, and from each other. While these multiples obviously correspond to an off-site dose or dose rate, the emphasis in classifying these events is the degradation in the level of safety of the plant, not the magnitude of the associated dose or dose rate.

This EAL includes any release for which a radioactivity discharge permit was not prepared, or a release that exceeds the conditions (e.g., minimum dilution flow, maximum discharge flow, alarm set-points, etc.) on the applicable permit.

This EAL is intended for sites that have established effluent monitoring on non-routine release pathways for which a discharge permit would not normally be prepared.

IPEC Basis:

The selected threshold value for the Plant Vent radiation monitors represents the geometric mean between the calculated UE threshold and SAE threshold values (ref. 2). This is due to the differences in the assumptions used to determine the ODCM (ref. 1) based alarm set-points and the dose assessment methodology used to calculate the SAE and GE thresholds for this release path. Selecting an average between the UE and SAE threshold values provides a realistic near-linear escalation path between the UE and SAE classification levels.

IPEC Basis Reference(s):

1. IPEC Offsite Dose Calculation Manual
2. EP-EALCALC-IPEC-1001, Revision 2, Radiological Gaseous Effluent EAL Values

Attachment 1 – Emergency Action Level Bases

Category: A – Abnormal Rad Release / Rad Effluent

Subcategory: 1 – Offsite Rad Conditions

Initiating Condition: **Any** release of gaseous or liquid radioactivity to the environment that exceeds significant multiples of the radiological effluent Offsite Dose Calculation Manual (ODCM) limits for 15 minutes or longer

EAL:

AA1.2 Alert

Any valid liquid monitor reading > Table A-1 column "Alert" for ≥ 15 min. (Note 2)

Table A-1 Effluent Monitor Classification Thresholds

Monitor		GE	SAE	Alert	UE
Gaseous	R-27	7.5 E+07 µCi/sec (2.3 E+00 µCi/cc)	7.5 E+06 µCi/sec (2.3 E-01 µCi/cc)	1.4 E+06 µCi/sec (4.2 E-02 µCi/cc)	2.6 E+05 µCi/sec (8.0 E-03 µCi/cc)
Gaseous	R-44 [14]	N/A	N/A	4.2 E-02 µCi/cc	8.0 E-03 µCi/cc
Liquid	R-54 [18]	N/A	N/A	4.0E-02 µCi/cc	2.5E-03 µCi/cc
Liquid	R-49 [19]	N/A	N/A	5.8E-02 µCi/cc	5.8E-04 µCi/cc

Note 2: The Emergency Director should not wait until the applicable time has elapsed, but should declare the event as soon as it is determined that the release duration has exceeded, or will likely exceed, the applicable time. In the absence of data to the contrary, assume that the release duration has exceeded the applicable time if an ongoing release is detected and the release start time is unknown.

Mode Applicability:

All

NEI 99-01 Basis:

The Emergency Director should not wait until the applicable time has elapsed, but should declare the event as soon as it is determined that the condition will likely exceed the applicable time.

This EAL addresses an actual or substantial potential decrease in the level of safety of the plant as indicated by a radiological release that exceeds regulatory commitments for an extended period of time.

Nuclear power plants incorporate features intended to control the release of radioactive effluents to the environment. Further, there are administrative controls established to prevent unintentional releases, or control and monitor intentional releases. The occurrence of extended, uncontrolled radioactive releases to the environment is indicative of a degradation in these features and/or controls.

The release rate multiples are specified in AU1.2 and AA1.2 only to distinguish between non-emergency conditions, and from each other. While these multiples obviously correspond to an off-site dose or dose rate, the emphasis in classifying these events is the degradation in the level of safety of the plant, not the magnitude of the associated dose or dose rate.

This EAL includes any release for which a radioactivity discharge permit was not prepared, or a release that exceeds the conditions (e.g., minimum dilution flow, maximum discharge flow, alarm set-points, etc.) on the applicable permit.

This EAL is intended for sites that have established effluent monitoring on non-routine release pathways for which a discharge permit would not normally be prepared.

IPEC Basis:

This event escalates from the Unusual Event by escalating the magnitude of the release by:

- R-49 [19] by a factor of 100
- R-54 [18] release rate at the upper range of the monitor (>4.0E-02 µCi/cc) (ref. 2).

Liquid releases in excess of the limits shown that continue for 15 minutes or longer represent an significant uncontrolled situation and hence, a potential substantial degradation in the level of safety. The final integrated dose (which is very low in the Alert emergency class) is not the primary concern here; it is the degradation in plant control implied by the fact that the release was not isolated within 15 minutes.

IPEC Basis Reference(s):

1. IPEC Offsite Dose Calculation Manual
2. Letter from S. Sandike to L. Glander dated Nov.15, 2010

Attachment 1 – Emergency Action Level Bases

Category: A – Abnormal Rad Release / Rad Effluent

Subcategory: 1 – Offsite Rad Conditions

Initiating Condition: **Any** release of gaseous or liquid radioactivity to the environment that exceeds significant multiples of the radiological effluent Offsite Dose Calculation Manual (ODCM) limits for 15 minutes or longer

EAL:

AA1.3 Alert

Confirmed sample analyses for gaseous or liquid releases indicate concentrations or release rates > 200 x ODCM limits for ≥ 15 min. (Note 2)

Note 2: The Emergency Director should not wait until the applicable time has elapsed, but should declare the event as soon as it is determined that the release duration has exceeded, or will likely exceed, the applicable time. In the absence of data to the contrary, assume that the release duration has exceeded the applicable time if an ongoing release is detected and the release start time is unknown.

Mode Applicability:

All

NEI 99-01 Basis:

The Emergency Director should not wait until the applicable time has elapsed, but should declare the event as soon as it is determined that the condition will likely exceed the applicable time.

This EAL addresses an actual or substantial potential decrease in the level of safety of the plant as indicated by a radiological release that exceeds regulatory commitments for an extended period of time.

Nuclear power plants incorporate features intended to control the release of radioactive effluents to the environment. Further, there are administrative controls established to prevent unintentional releases, or control and monitor intentional releases. The occurrence of extended, uncontrolled radioactive releases to the environment is indicative of a degradation in these features and/or controls.

The release rate multiples are specified in AU1.3 and AA1.3 only to distinguish between non-emergency conditions, and from each other. While these multiples obviously correspond to an off-site dose or dose rate, the emphasis in classifying these events is the degradation in the level of safety of the plant, not the magnitude of the associated dose or dose rate.

This EAL includes any release for which a radioactivity discharge permit was not prepared, or a release that exceeds the conditions (e.g., minimum dilution flow, maximum discharge flow, alarm set-points, etc.) on the applicable permit.

This EAL addresses uncontrolled releases that are detected by sample analyses, particularly on unmonitored pathways, e.g., spills of radioactive liquids into storm drains, heat exchanger leakage in river water systems, etc.

IPEC Basis:

Confirmed sample analyses in excess of two hundred times the site Offsite Dose Calculation Manual (ODCM) limits (ref. 1) that continue for 15 minutes or longer represent an uncontrolled situation and hence, a potential substantial degradation in the level of safety. This event escalates from the Unusual Event by raising the magnitude of the release by a factor of 100 over the Unusual Event level (i.e., 200 times ODCM).

The required release duration was reduced to 15 minutes in recognition of the raised severity.

IPEC Basis Reference(s):

1. IPEC, Offsite Dose Calculation Manual

Attachment 1 – Emergency Action Level Bases

Category: A – Abnormal Rad Release / Rad Effluent

Subcategory: 1 – Offsite Rad Conditions

Initiating Condition: Offsite dose resulting from an actual or imminent release of gaseous radioactivity greater than 100 mRem TEDE or 500 mRem thyroid CDE for the actual or projected duration of the release

EAL:

AS1.1 Site Area Emergency

Any valid radiation monitor reading that exceeds Table A-1 column "SAE" for ≥ 15 min. (Note 1)

Table A-1 Effluent Monitor Classification Thresholds

Monitor		GE	SAE	Alert	UE
Gaseous	R-27	7.5 E+07 µCi/sec (2.3 E+00 µCi/cc)	7.5 E+06 µCi/sec (2.3 E-01 µCi/cc)	1.4 E+06 µCi/sec (4.2 E-02 µCi/cc)	2.6 E+05 µCi/sec (8.0 E-03 µCi/cc)
Gaseous	R-44 [14]	N/A	N/A	4.2 E-02 µCi/cc	8.0 E-03 µCi/cc
Liquid	R-54 [18]	N/A	N/A	4.0E-02 µCi/cc	2.5E-03 µCi/cc
Liquid	R-49 [19]	N/A	N/A	5.8E-02 µCi/cc	5.8E-04 µCi/cc

Note 1: The Emergency Director should not wait until the applicable time has elapsed, but should declare the event as soon as it is determined that the condition will likely exceed the applicable time. **IF** dose assessment results are available, **THEN** declaration should be based on dose assessment instead of radiation monitor values. (See EA AS2.1.AG1.2) Do not delay declaration awaiting dose assessment results.

Mode Applicability:

All

NEI 99-01 Basis:

This EAL addresses radioactivity releases that result in doses at or beyond the site boundary that exceed 10% of the EPA Protective Action Guides (PAGs). Releases of this magnitude are associated with the failure of plant systems needed for the protection of the public.

While these failures are addressed by other EALs, this EAL provides appropriate diversity and addresses events which may not be able to be classified on the basis of plant status alone. It is important to note that for the more severe accidents the release may be unmonitored or there may be large uncertainties associated with the source term and/or meteorology.

The EPA PAGs are expressed in terms of the sum of the effective dose equivalent (EDE) and the committed effective dose equivalent (CEDE), or as the thyroid committed dose equivalent (CDE). For the purpose of these IC/EALs, the dose quantity total effective dose equivalent (TEDE), as defined in 10 CFR 20, is used in lieu of "...sum of EDE and CEDE...." The EPA PAG guidance provides for the use adult thyroid dose conversion factors.

The TEDE dose is set at 10% of the EPA PAG, while the 500 mRem thyroid CDE was established in consideration of the 1:5 ratio of the EPA PAG for TEDE and thyroid CDE.

The site specific monitor list includes effluent monitors on all potential release pathways.

Since dose assessment is based on actual meteorology, whereas the monitor reading EAL is not, the results from these assessments may indicate that the classification is not warranted, or may indicate that a higher classification is warranted. For this reason, emergency implementing procedures call for the timely performance of dose assessments using actual meteorology and release information. If the results of these dose assessments are available when the classification is made (e.g., initiated at a lower classification level), the dose assessment results override the monitor reading EAL.

IPEC Basis:

None

IPEC Basis Reference(s):

1. EP-EALCALC-IPEC-1001, Revision 2, Radiological Gaseous Effluent EAL Values

Attachment 1 – Emergency Action Level Bases

Category: A – Abnormal Rad Release / Rad Effluent

Subcategory: 1 – Offsite Rad Conditions

Initiating Condition: Offsite dose resulting from an actual or imminent release of gaseous radioactivity greater than 100 mRem TEDE or 500 mRem thyroid CDE for the actual or projected duration of the release

EAL:

AS1.2 Site Area Emergency

Dose assessment using actual meteorology indicates doses > 100 mRem TEDE or > 500 mRem thyroid CDE at or beyond the site boundary

Mode Applicability:

All

NEI 99-01 Basis:

This EAL addresses radioactivity releases that result in doses at or beyond the site boundary that exceed 10% of the EPA Protective Action Guides (PAGs). Releases of this magnitude are associated with the failure of plant systems needed for the protection of the public.

While these failures are addressed by other EALs, this EAL provides appropriate diversity and addresses events which may not be able to be classified on the basis of plant status alone. It is important to note that for the more severe accidents the release may be unmonitored or there may be large uncertainties associated with the source term and/or meteorology.

The EPA PAGs are expressed in terms of the sum of the effective dose equivalent (EDE) and the committed effective dose equivalent (CEDE), or as the thyroid committed dose equivalent (CDE). For the purpose of these IC/EALs, the dose quantity total effective dose equivalent (TEDE), as defined in 10 CFR 20, is used in lieu of "...sum of EDE and CEDE...." The EPA PAG guidance provides for the use adult thyroid dose conversion factors.

The TEDE dose is set at 10% of the EPA PAG, while the 500 mRem thyroid CDE was established in consideration of the 1:5 ratio of the EPA PAG for TEDE and thyroid CDE.

Since dose assessment is based on actual meteorology, whereas the monitor reading EAL is not, the results from these assessments may indicate that the classification is not warranted, or may indicate that a higher classification is warranted. For this reason, emergency implementing procedures call for the timely performance of dose assessments using actual meteorology and release information. If the results of these dose assessments are available when the classification is made (e.g., initiated at a lower classification level), the dose assessment results override the monitor reading EAL.

IPEC Basis:

The dose assessment (ref. 1) EALs are based on a Site Boundary dose rate of 100 mRem/hr. TEDE or 500 mRem/hr. CDE thyroid, whichever is more limiting. Actual meteorology is specifically identified since it gives the most accurate dose assessment. Actual meteorology (including forecasts) should be used whenever possible.

IPEC Basis Reference(s):

1. IP-EP-310, "Dose Assessment"

Attachment 1 – Emergency Action Level Bases

Category: A – Abnormal Rad Release / Rad Effluent

Subcategory: 1 – Offsite Rad Conditions

Initiating Condition: Offsite dose resulting from an actual or imminent release of gaseous radioactivity greater than 100 mRem TEDE or 500 mRem thyroid CDE for the actual or projected duration of the release

EAL:

AS1.3 Site Area Emergency

Field survey indicates closed window dose rate > 100 mRem/hr. that is expected to continue for ≥ 1 hr. at or beyond the site boundary

OR

Field survey sample analysis indicates thyroid CDE of > 500 mRem for 1 hr. of inhalation at or beyond the site boundary

(Note 1)

Note 1: The Emergency Director should not wait until the applicable time has elapsed, but should declare the event as soon as it is determined that the condition will likely exceed the applicable time. **IF** dose assessment results are available, **THEN** declaration should be based on dose assessment instead of radiation monitor values. (See EAL AS1.2/AG1.2) Do not delay declaration awaiting dose assessment results.

Mode Applicability:

All

NEI 99-01 Basis:

This EAL addresses radioactivity releases that result in doses at or beyond the site boundary that exceed 10% of the EPA Protective Action Guides (PAGs). Releases of this magnitude are associated with the failure of plant systems needed for the protection of the public.

While these failures are addressed by other EALs, this EAL provides appropriate diversity and addresses events which may not be able to be classified on the basis of plant status alone. It is important to note that for the more severe accidents the release may be unmonitored or there may be large uncertainties associated with the source term and/or meteorology.

The EPA PAGs are expressed in terms of the sum of the effective dose equivalent (EDE) and the committed effective dose equivalent (CEDE), or as the thyroid committed dose equivalent (CDE). For the purpose of these IC/EALs, the dose quantity total effective dose equivalent (TEDE), as defined in 10 CFR 20, is used in lieu of "...sum of EDE and CEDE...." The EPA PAG guidance provides for the use adult thyroid dose conversion factors.

The TEDE dose is set at 10% of the EPA PAG, while the 500 mRem thyroid CDE was established in consideration of the 1:5 ratio of the EPA PAG for TEDE and thyroid CDE.

IPEC Basis:

The 500 mRem integrated CDE thyroid dose was established in consideration of the 1:5 ratio of the EPA Protective Action Guidelines for TEDE and thyroid exposure. In establishing the field survey emergency action levels, a duration of one hour is assumed (ref. 1, 2). Therefore, the dose rate EALs are based on a Site Boundary dose rate of 100 mRem/hr. TEDE or 500 mRem for 1 hour of inhalation CDE thyroid, whichever is more limiting.

IPEC Basis Reference(s):

1. IP-EP-320 "Radiological Field Monitoring"
2. IP-EP-310 "Dose Assessment"

Attachment 1 – Emergency Action Level Bases

Category: A – Abnormal Rad Release / Rad Effluent

Subcategory: 1 – Offsite Rad Conditions

Initiating Condition: Offsite dose resulting from an actual or imminent release of gaseous radioactivity greater than 1,000 mRem TEDE or 5,000 mRem thyroid CDE for the actual or projected duration of the release using actual meteorology

EAL:

AG1.1 General Emergency

Any valid radiation monitor reading > Table A-1 column "GE" for ≥ 15 min. (Note 1)

Table A-1 Effluent Monitor Classification Thresholds

	Monitor	GE	SAE	Alert	UE
Gaseous	R-27	7.5 E+07 µCi/sec (2.3 E+00 µCi/cc)	7.5 E+06 µCi/sec (2.3 E-01 µCi/cc)	1.4 E+06 µCi/sec (4.2 E-02 µCi/cc)	2.6 E+05 µCi/sec (8.0 E-03 µCi/cc)
Gaseous	R-44 [14]	N/A	N/A	4.2 E-02 µCi/cc	8.0 E-03 µCi/cc
Liquid	R-54 [18]	N/A	N/A	4.0E-02 µCi/cc	2.5E-03 µCi/cc
Liquid	R-49 [19]	N/A	N/A	5.8E-02 µCi/cc	5.8E-04 µCi/cc

Note 1: The Emergency Director should not wait until the applicable time has elapsed, but should declare the event as soon as it is determined that the condition will likely exceed the applicable time. **IF** dose assessment results are available, **THEN** declaration should be based on dose assessment instead of radiation monitor values. (See EAL AS1.2/AG1.2) Do not delay declaration awaiting dose assessment results.

Mode Applicability:

All

NEI 99-01 Basis:

This EAL addresses radioactivity releases that result in doses at or beyond the site boundary that exceed the EPA Protective Action Guides (PAGs). Public protective actions will be

necessary. Releases of this magnitude are associated with the failure of plant systems needed for the protection of the public and likely involve fuel damage.

While these failures are addressed by other EALs, this EAL provides appropriate diversity and addresses events which may not be able to be classified on the basis of plant status alone. It is important to note that for the more severe accidents the release may be unmonitored or there may be large uncertainties associated with the source term and/or meteorology.

The EPA PAGs are expressed in terms of the sum of the effective dose equivalent (EDE) and the committed effective dose equivalent (CEDE), or as the thyroid committed dose equivalent (CDE). For the purpose of these IC/EALs, the dose quantity total effective dose equivalent (TEDE), as defined in 10 CFR 20, is used in lieu of "...sum of EDE and CEDE...." The EPA PAG guidance provides for the use adult thyroid dose conversion factors. However, NYS has decided to calculate child thyroid CDE. Utility IC/EALs are consistent with those of the states involved in the facilities emergency planning zone.

The TEDE dose is set at the EPA PAG, while the 5000 mRem thyroid CDE was established in consideration of the 1:5 ratio of the EPA PAG for TEDE and thyroid CDE.

The monitor list includes effluent monitors on all potential release pathways.

Since dose assessment is based on actual meteorology, whereas the monitor reading EAL is not, the results from these assessments may indicate that the classification is not warranted, or may indicate that a higher classification is warranted. For this reason, emergency implementing procedures should call for the timely performance of dose assessments using actual meteorology and release information. If the results of these dose assessments are available when the classification is made (e.g., initiated at a lower classification level), the dose assessment results override the monitor reading EAL.

IPEC Basis:

The General Emergency effluent monitor threshold is one decade greater than the Site Area Emergency value (ref. 1).

IPEC Basis Reference(s):

1. EP-EALCALC-IPEC-1001, Revision 2, Radiological Gaseous Effluent EAL Values

Attachment 1 – Emergency Action Level Bases

Category: A – Abnormal Rad Release / Rad Effluent

Subcategory: 1 – Offsite Rad Conditions

Initiating Condition: Offsite dose resulting from an actual or imminent release of gaseous radioactivity greater than 1,000 mRem TEDE or 5,000 mRem thyroid CDE for the actual or projected duration of the release using actual meteorology

EAL:

AG1.2	**General Emergency**
Dose assessment using actual meteorology indicates doses > 1,000 mRem TEDE or > 5,000 mRem thyroid CDE at or beyond the site boundary	

Mode Applicability:

All

NEI 99-01 Basis:

This EAL addresses radioactivity releases that result in doses at or beyond the site boundary that exceed the EPA Protective Action Guides (PAGs). Public protective actions will be necessary. Releases of this magnitude are associated with the failure of plant systems needed for the protection of the public and likely involve fuel damage.

While these failures are addressed by other EALs, this EAL provides appropriate diversity and addresses events which may not be able to be classified on the basis of plant status alone. It is important to note that for the more severe accidents the release may be unmonitored or there may be large uncertainties associated with the source term and/or meteorology.

The EPA PAGs are expressed in terms of the sum of the effective dose equivalent (EDE) and the committed effective dose equivalent (CEDE), or as the thyroid committed dose equivalent (CDE). For the purpose of these IC/EALs, the dose quantity total effective dose equivalent (TEDE), as defined in 10 CFR 20, is used in lieu of "...sum of EDE and CEDE...." The EPA PAG guidance provides for the use adult thyroid dose conversion factors. However, NYS has decided to calculate child thyroid CDE. Utility IC/EALs are consistent with those of the states involved in the facilities emergency planning zone.

The TEDE dose is set at the EPA PAG, while the 5000 mRem thyroid CDE was established in consideration of the 1:5 ratio of the EPA PAG for TEDE and thyroid CDE.

The site specific monitor list includes effluent monitors on all potential release pathways.

Since dose assessment is based on actual meteorology, whereas the monitor reading EAL is not, the results from these assessments may indicate that the classification is not warranted, or may indicate that a higher classification is warranted. For this reason, emergency implementing procedures call for the timely performance of dose assessments using actual meteorology and release information. If the results of these dose assessments are available when the classification is made (e.g., initiated at a lower classification level), the dose assessment results override the monitor reading EAL.

IPEC Basis:

The General Emergency dose assessment (ref. 1) values are based on the boundary dose resulting from an actual or imminent release of gaseous radioactivity that exceeds 1,000 mRem TEDE or 5,000 mRem CDE thyroid for the actual or projected duration of the release. Actual meteorology is specifically identified since it gives the most accurate dose assessment. Actual meteorology should be used whenever possible.

IPEC Basis Reference(s):

1. IP-EP-310, "Dose Assessment"

Attachment 1 – Emergency Action Level Bases

Category: A – Abnormal Rad Release / Rad Effluent

Subcategory: 1 – Offsite Rad Conditions

Initiating Condition: Offsite dose resulting from an actual or imminent release of gaseous radioactivity greater than 1,000 mRem TEDE or 5,000 mRem thyroid CDE for the actual or projected duration of the release using actual meteorology

EAL:

AG1.3 General Emergency

Field survey results indicate closed window dose rates > 1,000 mRem/hr. expected to continue for ≥ 1 hr. at or beyond the site boundary

OR

Analyses of field survey samples indicate thyroid CDE of > 5,000 mRem for 1 hr. of inhalation at or beyond the site boundary

(Note 1)

Note 1: The Emergency Director should not wait until the applicable time has elapsed, but should declare the event as soon as it is determined that the condition will likely exceed the applicable time. **IF** dose assessment results are available, **THEN** declaration should be based on dose assessment instead of radiation monitor values. (See EAL AS1.2/AG1.2) Do not delay declaration awaiting dose assessment results.

Mode Applicability:

All

NEI 99-01 Basis:

This EAL addresses radioactivity releases that result in doses at or beyond the site boundary that exceed the EPA Protective Action Guides (PAGs). Public protective actions will be necessary. Releases of this magnitude are associated with the failure of plant systems needed for the protection of the public and likely involve fuel damage.

While these failures are addressed by other EALs, this EAL provides appropriate diversity and addresses events which may not be able to be classified on the basis of plant status alone. It is important to note that for the more severe accidents the release may be unmonitored or there may be large uncertainties associated with the source term and/or meteorology.

The EPA PAGs are expressed in terms of the sum of the effective dose equivalent (EDE) and the committed effective dose equivalent (CEDE), or as the thyroid committed dose equivalent (CDE). For the purpose of these IC/EALs, the dose quantity total effective dose equivalent (TEDE), as defined in 10 CFR 20, is used in lieu of "...sum of EDE and CEDE...." The EPA PAG guidance provides for the use adult thyroid dose conversion factors. However, NYS has decided to calculate child thyroid CDE. Utility IC/EALs are consistent with those of the states involved in the facilities emergency planning zone.

The TEDE dose is set at the EPA PAG, while the 5000 mRem thyroid CDE was established in consideration of the 1:5 ratio of the EPA PAG for TEDE and thyroid CDE.

IPEC Basis:

The 5,000 mRem integrated CDE thyroid dose was established in consideration of the 1:5 ratio of the EPA Protective Action Guidelines for TEDE and thyroid exposure. In establishing the dose rate emergency action levels, a duration of one hour is assumed (ref. 1, 2). Therefore, the dose rate EALs are based on a Site Boundary dose rate of 1000 mRem/hr. TEDE or 5000 mRem for 1 hour of inhalation CDE thyroid, whichever is more limiting.

IPEC Basis Reference(s):

1. IP-EP-320 "Radiological Field Monitoring"
2. IP-EP-310 "Dose Assessment"

Category: A – Abnormal Rad Release / Rad Effluent

Subcategory: 2 – Onsite Rad Conditions & Irradiated Fuel Events

Initiating Condition: Unplanned rise in plant radiation levels

EAL:

AU2.1 Unusual Event

Unplanned low water level or alarm indicating uncontrolled water level decrease in the refueling cavity, SFP or fuel transfer canal

AND

Valid area radiation monitor reading rise on **any** of the following:

- R-2/R-7 Vapor Containment Area Monitors
- R-5 Fuel Storage Building Area Monitor
- R-25/R-26 Vapor Containment High Radiation Area Monitors

Mode Applicability:

All

NEI 99-01 Basis:

This EAL addresses increased radiation levels as a result of water level decreases above irradiated fuel or events that have resulted, or may result, in unplanned increases in radiation dose rates within plant buildings. These radiation increases represent a loss of control over radioactive material and represent a potential degradation in the level of safety of the plant.

Indications may include instrumentation such as water level and local area radiation monitors, and personnel (e.g., refueling crew) reports. If available, video cameras may allow remote observation. Depending on available level instrumentation, the declaration threshold may need to be based on indications of water makeup rate or decrease in water storage tank level.

In light of Reactor Cavity Seal failure incidents at two different PWRs and loss of water in the Spent Fuel Pit/Fuel Transfer Canal at a BWR, explicit coverage of these types of events via this threshold is appropriate given their potential for increased doses to plant staff.

The refueling pathway is a site specific combination of cavities, tubes, canals and pools. While a radiation monitor could detect an increase in dose rate due to a drop in the water level, it might not be a reliable indication of whether or not the fuel is covered.

For example, a refueling bridge ARM reading may increase due to planned evolutions such as head lift, or even a fuel assembly being raised in the manipulator mast. Also, a monitor could in fact be properly responding to a known event involving transfer or relocation of a source, stored in or near the fuel pool or responding to a planned evolution such as removal of the reactor head. Generally, increased radiation monitor indications will need to combined with another indicator (or personnel report) of water loss.

For refueling events where the water level drops below the RPV flange classification would be via CU2.1. This event escalates to an Alert per AA2.1 if irradiated fuel outside the reactor vessel is uncovered. For events involving irradiated fuel in the reactor vessel, escalation would be via the Fission Product Barrier Table for events in operating modes 1-3.

IPEC Basis:

Loss of inventory from the refueling cavity, SFP or fuel transfer canal may reduce water shielding above spent fuel and cause unexpected increases in plant radiation. Classification as an Unusual Event is warranted as a precursor to a more serious event.

On Unit 2, the SFP Technical Specification minimum water level is 92' 2". The SFP low water level alarm set-point is 93' 3". Water level restoration instructions for loss of refueling cavity water level during refueling are performed in accordance with 2-AOP-FH-1.

On Unit 3, the SFP low water level alarm set-point is actuated by LC-650. Water level restoration instructions for loss of refueling cavity water level during refueling are performed in accordance with 3-AOP-FH-1.

When the fuel transfer canal is directly connected to the SFP and reactor cavity, there could exist the possibility of uncovering irradiated fuel in the fuel transfer canal. Therefore, this EAL is applicable for conditions in which irradiated fuel is being transferred to and from the RPV and SFP.

The listed radiation monitors are those likely to be affected by the loss of inventory from the reactor cavity, SFP and fuel transfer canal.

This event escalates to an Alert if irradiated fuel outside the reactor vessel is uncovered or damaged. For events involving irradiated fuel in the reactor vessel, escalation would be via the fission product barrier matrix

IPEC Basis Reference(s):

1. 2-AOP-FH-1, "Fuel Damage or Loss of SFP/Refueling Cavity Level"
2. 3-AOP-FH-1, "Fuel Damage or Loss of SFP/Refueling Cavity Level

Attachment 1 – Emergency Action Level Bases

Category: A – Radioactivity Release / Area Radiation

Subcategory: 2 – Onsite Rad Conditions & Irradiated Fuel Events

Initiating Condition: Unplanned rise in plant radiation levels

EAL:

AU2.2 Unusual Event

Unplanned valid area radiation monitor reading or survey results increase by a factor of 1,000 over normal levels*

* Normal levels can be considered as the highest reading in the past 24 hours excluding the current peak value

Mode Applicability:

All

NEI 99-01 Basis:

This EAL addresses increased radiation levels as a result of water level decreases above irradiated fuel or events that have resulted, or may result, in unplanned increases in radiation dose rates within plant buildings. These radiation increases represent a loss of control over radioactive material and represent a potential degradation in the level of safety of the plant.

This EAL addresses increases in plant radiation levels that represent a loss of control of radioactive material resulting in a potential degradation in the level of safety of the plant.

This EAL excludes radiation level increases that result from planned activities such as use of radiographic sources and movement of radioactive waste materials. A specific list of ARMs is not required as it would restrict the applicability of the threshold. The intent is to identify loss of control of radioactive material in any monitored area.

IPEC Basis:

The ARMs monitor the gamma radiation levels in units of mR/hr. at selected areas throughout the station. If radiation levels exceed a preset limit in any channel, the Control Room annunciator and local alarms will be energized to warn of abnormal or significantly changing radiological conditions. The alarm limit is normally set at approximately 10 times normal background for each channel. (ref. 1, 2)

Routine and work specific surveys are conducted throughout the station at frequencies specified by the RP Superintendent. Routine surveys are scheduled per the RP Department Surveillance Schedule. Work specific surveys are conducted in accordance with the Radiation Work Permit (RWP).

IPEC Basis Reference(s):

1. 2-SOP-12.3.3 Radiation Monitor Set-point Control
2. 3-SOP-RM-010 Radiation Monitor Set-point Control

Category: A – Abnormal Rad Release / Rad Effluent

Subcategory: 2 – Onsite Rad Conditions & Irradiated Fuel Events

Initiating Condition: Damage to irradiated fuel or loss of water level that has or will result in the uncovering of irradiated fuel outside the reactor vessel

EAL:

AA2.1 Alert

Damage to irradiated fuel or loss of water level (uncovering irradiated fuel outside the Reactor Vessel) that causes a valid high alarm on **any** of the following radiation monitors:

- R-2/R-7 Vapor Containment Area Monitors
- R-5 Fuel Storage Building Area Monitor
- R-42[R-12] VC Gas Activity
- R-25/R-26 Vapor Containment High Radiation Area Monitors

Mode Applicability:

All

NEI 99-01 Basis:

This EAL addresses increases in radiation dose rates within plant buildings, and may be a precursor to a radioactivity release to the environment. These events represent a loss of control over radioactive material and represent an actual or substantial potential degradation in the level of safety of the plant.

These events escalate from AU2.1 in that fuel activity has been released, or is anticipated due to fuel heat up. This EAL applies to spent fuel requiring water coverage and is not intended to address spent fuel which is licensed for dry storage.

This EAL addresses radiation monitor indications of fuel uncovery and/or fuel damage.

Increased ventilation monitor readings may be indication of a radioactivity release from the fuel, confirming that damage has occurred. Increased background at the ventilation monitor due to water level decrease may mask increased ventilation exhaust airborne activity and needs to be considered.

While a radiation monitor could detect an increase in dose rate due to a drop in the water level, it might not be a reliable indication of whether or not the fuel is covered.

For example, a refueling bridge ARM reading may increase due to planned evolutions such as head lift, or even a fuel assembly being raised in the manipulator mast. Also, a monitor could in fact be properly responding to a known event involving transfer or relocation of a source, stored in or near the fuel pool or responding to a planned evolution such as removal of the reactor head. Generally, increased radiation monitor indications will need to combined with another indicator (or personnel report) of water loss.

Escalation of this emergency classification level, if appropriate, would be based on AS1.1 or AG1.1.

IPEC Basis:

When considering classification, information may come from:

- Radiation monitor readings
- Sampling and surveys
- Dose projections/calculations
- Reports from the scene regarding the extent of damage (e.g., refueling crew, radiation protection technicians)

This EAL is defined by the specific areas where irradiated fuel is located, such as the refueling cavity or Spent Fuel Pit (SFP). The listed radiation monitors are those likely to be affected by the loss of inventory and/or damaged spent fuel located in the reactor cavity, SFP and fuel transfer canal.

IPEC Basis Reference(s):

1. 2-AOP-FH-1, "Fuel Damage or Loss of SFP/Refueling Cavity Level"
2. 3-AOP-FH-1, "Fuel Damage or Loss of SFP/Refueling Cavity Level
3. 2-SOP-12.3.3 Radiation Monitor Set-point Control
4. 3-SOP-RM-010 Radiation Monitor Set-point Control

Category: A – Abnormal Rad Release / Rad Effluent

Subcategory: 2 – Onsite Rad Conditions & Irradiated Fuel Events

Initiating Condition: Damage to irradiated fuel or loss of water level that has or will result in the uncovering of irradiated fuel outside the reactor vessel

EAL:

AA2.2 Alert

A water level drop in the reactor cavity, SFP or fuel transfer canal that will result in irradiated fuel becoming uncovered

Mode Applicability:

All

NEI 99-01 Basis:

This EAL addresses increases in radiation dose rates within plant buildings, and may be a precursor to a radioactivity release to the environment. These events represent a loss of control over radioactive material and represent an actual or substantial potential degradation in the level of safety of the plant.

These events escalate from AU2.1 in that fuel activity has been released, or is anticipated due to fuel heat up. This IC applies to spent fuel requiring water coverage and is not intended to address spent fuel which is licensed for dry storage.

Indications may include instrumentation such as water level and local area radiation monitors, and personnel (e.g., refueling crew) reports. If available, video cameras may allow remote observation. Depending on available level instrumentation, the declaration threshold may need to be based on indications of water makeup rate or decrease in water storage tank level.

Escalation of this emergency classification level, if appropriate, would be based on AS1.1 or AG1.1.

IPEC Basis:

When considering classification, information may come from:

- Radiation monitor readings
- Sampling and surveys
- Dose projections/calculations
- Reports from the scene regarding the extent of damage (e.g., refueling crew, radiation protection technicians)

If available, video cameras may allow remote observation. Depending on available level indication, the declared threshold may need to be based on indications of makeup rate or decrease in refueling water storage tank level.

IPEC Basis Reference(s):

1. 2[3]-AOP-FH-1, "Fuel Damage or Loss of SFP/Refueling Cavity Level"

Attachment 1 – Emergency Action Level Bases

Category: A – Abnormal Rad Release / Rad Effluent

Subcategory: 3 – CR/CAS Radiation

Initiating Condition: Rise in radiation levels within the facility that impedes operation of systems required to maintain plant safety functions

EAL:

AA3.1 Alert

Dose rates > 15 mR/hr. in areas requiring continuous occupancy to maintain plant safety functions:

Control Room (R-1)

OR

CAS

Mode Applicability:

All

NEI 99-01 Basis:

This EAL addresses increased radiation levels that: impact continued operation in areas requiring continuous occupancy to maintain safe operation or to perform a safe shutdown.

The cause and/or magnitude of the increase in radiation levels is not a concern of this EAL. The Emergency Director must consider the source or cause of the increased radiation levels and determine if any other IC may be involved.

This EAL is not meant to apply to increases in the containment radiation monitors as these are events which are addressed in the fission product barrier table.

The value of 15mR/hr. is derived from the GDC 19 value of 5 rem in 30 days with adjustment for expected occupancy times. Although Section III.D.3 of NUREG-0737, "Clarification of TMI Action Plan Requirements", provides that the 15 mR/hr. value can be averaged over the 30 days, the value is used here without averaging, as a 30 day duration implies an event potentially more significant than an Alert.

Areas requiring continuous occupancy include the control room and any other control stations that are staffed continuously, such as the security alarm station.

IPEC Basis:

Areas that meet this threshold include the Control Room and the Central Alarm Station (CAS). The security access point is included in this EAL because of its importance to permitting access to areas required to assure safe plant operations.

There are no permanently installed CAS area radiation monitors that may be used to assess this EAL threshold. Therefore these thresholds must be assessed via local radiation survey for the CAS.

IPEC Basis Reference(s):

Category C – Cold Shutdown / Refueling System Malfunction

EAL Group: Cold Conditions (RCS temperature ≤ 200°F); EALs in this category are applicable only in one or more cold operating modes.

Category C EALs are directly associated with cold shutdown or refueling system safety functions. Given the variability of plant configurations (e.g., systems out-of-service for maintenance, containment open, reduced AC power redundancy, time since shutdown) during these periods, the consequences of any given initiating event can vary greatly. For example, a loss of decay heat removal capability that occurs at the end of an extended outage has less significance than a similar loss occurring during the first week after shutdown. Compounding these events is the likelihood that instrumentation necessary for assessment may also be inoperable. The cold shutdown and refueling system malfunction EALs are based on performance capability to the extent possible with consideration given to RCS integrity, Containment Closure, and fuel clad integrity for the applicable operating modes (4 - Cold Shutdown, 5 - Refuel, D – Defueled).

The events of this category pertain to the following subcategories:

1. Loss of AC Power

Loss of emergency plant electrical power can compromise plant safety system operability including decay heat removal and emergency core cooling systems which may be necessary to ensure fission product barrier integrity. This category includes loss of onsite and offsite sources for 480 VAC safeguards buses.

2. RPV Level

RPV water level is a measure of inventory available to ensure adequate core cooling and, therefore, maintain fuel clad integrity. The RPV provides a volume for the coolant that covers the reactor core. The RPV and associated pressure piping (reactor coolant system) together provide a barrier to limit the release of radioactive material should the reactor fuel clad integrity fail.

3. RCS Temperature

Uncontrolled or inadvertent temperature or pressure increases are indicative of a potential loss of safety functions.

4. Communications

Certain events that degrade plant operator ability to effectively communicate with essential personnel within or external to the plant warrant emergency classification.

5. Inadvertent Criticality

Inadvertent criticalities pose potential personnel safety hazards as well being indicative of losses of reactivity control.

6. Loss of DC Power

Loss of emergency plant electrical power can compromise plant safety system operability including decay heat removal and emergency core cooling systems which may be necessary to ensure fission product barrier integrity. This category includes loss of vital 125-Volt DC power sources.

Attachment 1 – Emergency Action Level Bases

Category: C – Cold Shutdown / Refueling System Malfunction

Subcategory: 1 – Loss of AC Power

Initiating Condition: AC power capability to safeguards buses reduced to a single power source for 15 minutes or longer such that **any** additional single failure would result in loss of **all** AC power to safeguards buses

EAL:

CU1.1 Unusual Event

AC power capability to 480 V safeguards buses (5A, 2A/3A, 6A) reduced to a single power source (Table C-4) for ≥ 15 min. such that **any** additional single failure would result in loss of **all** AC power to safeguard buses (Note 3)

Note 3: The Emergency Director should not wait until the applicable time has elapsed, but should declare the event as soon as it is determined that the condition will likely exceed the applicable time.

Table C-4 Safeguard Bus AC Power Sources

	Onsite	Offsite
Unit 2	* 480 V EDG 21 * 480 V EDG 22 * 480 V EDG 23 * Appendix R Diesel	* Unit Auxiliary transformer* * Station Auxiliary transformer* * 13.8 KV gas turbine auto transformer* * * With 86P or 86BU tripped, all offsite power supplies must be considered as one power supply.
Unit 3	* 480V EDG 31 * 480V EDG 32 * 480V EDG 33 * Appendix R Diesel	* Unit Auxiliary transformer * Station Auxiliary transformer * 13W92 feeder * 13W93 feeder

Mode Applicability:

5 - Cold Shutdown, 6 – Refuel

NEI 99-01 Basis:

The condition indicated by this EAL is the degradation of the off-site and on-site AC power systems such that any additional single failure would result in a station blackout. This condition could occur due to a loss of off-site power with a concurrent failure of all but one emergency generator to supply power to its emergency busses. The subsequent loss of this single power source would escalate the event to an Alert in accordance with CA1.1.

Fifteen minutes was selected as a threshold to exclude transient or momentary losses of power.

IPEC Basis:

The condition indicated by this EAL would include the degradation of the offsite power with a concurrent failure of all but one emergency generator to supply power to its emergency bus. Another related condition could be the loss of all offsite power and loss of onsite emergency diesels with only one train of emergency buses being fed from the unit main generator, or the loss of onsite emergency diesels with only one train of emergency buses being fed from offsite power. The subsequent loss of this single power source would result in a loss of all AC to the 480 V safeguards buses.

Indian Point Unit 2 has a blackout/unit trip/no safety injection logic that opens all the normal supply breakers and locks them out from re-closure. The blackout is sensed by under voltage on either 480V Bus 5A or 6A. The unit trip is sensed by lockout relays 86P and 86BU. Therefore, with 86P or 86BU relays tripped, under voltage on Bus 5A or 6A (a single failure) would cause a loss of all offsite power to the "essential buses." For the condition where all emergency diesel generators are inoperable when the unit is shut down and relays 86P and 86BU are not reset, a loss of power to either 480V Bus 5A or 480V Bus 6A will cause the normal supply breakers to all 480V buses to open.

If emergency bus AC power is reduced to a single source for greater than 15 minutes, an Unusual Event is declared under this EAL.

This cold condition EAL is equivalent to the hot condition loss of AC power EAL SA1.1.

IPEC Basis Reference(s):

1. FSAR Section 8.2
2. 2-ECA-0.0, "Loss of All AC Power"
3. 3-ECA-0.0, "Loss of All AC Power"

Attachment 1 – Emergency Action Level Bases

Category: C – Cold Shutdown / Refueling System Malfunction

Subcategory: 1 – Loss of AC Power

Initiating Condition: Loss of **all** offsite and **all** onsite AC power to safeguards buses for 15 minutes or longer

EAL:

CA1.1 Alert

Loss of **all** offsite and onsite AC power (Table C-4) to 480 V safeguards buses (5A, 2A/3A, 6A) for ≥ 15 min. (Note 3)

Note 3: The Emergency Director should not wait until the applicable time has elapsed, but should declare the event as soon as it is determined that the condition will likely exceed the applicable time.

Table C-4 Safeguard Bus AC Power Sources

	Onsite	Offsite
Unit 2	* 480 V EDG 21 * 480 V EDG 22 * 480 V EDG 23 * Appendix R Diesel	* Unit Auxiliary transformer* * Station Auxiliary transformer* * 13.8 KV gas turbine auto transformer* * * With 86P or 86BU tripped, all offsite power supplies must be considered as one power supply.
Unit 3	* 480V EDG 31 * 480V EDG 32 * 480V EDG 33 * Appendix R Diesel	* Unit Auxiliary transformer * Station Auxiliary transformer * 13W92 feeder * 13W93 feeder

Mode Applicability:

5 - Cold Shutdown, 6 - Refueling, D – Defueled

NEI 99-01 Basis:

Loss of all AC power compromises all plant safety systems requiring electric power including RHR, ECCS, Containment Heat Removal, Spent Fuel Heat Removal and the Ultimate Heat Sink.

The event can be classified as an Alert when in Cold Shutdown, Refueling, or Defueled mode because of the significantly reduced decay heat and lower temperature and pressure, increasing the time to restore one of the emergency buses, relative to that specified for the Site Area Emergency EAL.

Escalating to Site Area Emergency, if appropriate, is by Abnormal Rad Levels / Radiological Effluent EALs.

Fifteen minutes was selected as a threshold to exclude transient or momentary power losses.

IPEC Basis:

This EAL is indicated by the loss of all offsite and onsite AC power to the safeguards buses (5A, 2A/3A, 6A).

This EAL is the cold condition equivalent of the hot condition loss of all AC power EAL SS1.1. When in Cold Shutdown, Refuel, or Defueled mode, the event can be classified as an Alert because of the significantly reduced decay heat, lower temperature and pressure, increasing the time to restore one of the emergency buses, relative to that existing when in hot conditions.

IPEC Basis Reference(s):

1. FSAR Section 8.2
2. 2-ECA-0.0, "Loss of All AC Power"
3. 3-ECA-0.0, "Loss of All AC Power"

Attachment 1 – Emergency Action Level Bases

Category: C – Cold Shutdown / Refueling System Malfunction

Subcategory: 2 – Reactor Vessel Level

Initiating Condition: RCS leakage

EAL:

CU2.1	**Unusual Event**
Inability to restore or maintain pressurizer level > 18% or RCS target level band due to RCS leakage for ≥ 15 min. (Note 3)	

Note 3: The Emergency Director should not wait until the applicable time has elapsed, but should declare the event as soon as it is determined that the condition will likely exceed the applicable time.

Mode Applicability:

5 - Cold Shutdown

NEI 99-01 Basis:

This EAL is considered to be a potential degradation of the level of safety of the plant. The inability to maintain or restore level is indicative of loss of RCS inventory.

Relief valve normal operation should be excluded from this EAL. However, a relief valve that operates and fails to close per design should be considered applicable to this EAL if the relief valve cannot be isolated.

Prolonged loss of RCS Inventory may result in escalation to the Alert emergency classification level via either CA2.1 or CA3.1.

IPEC Basis:

The condition of this EAL may be a precursor of more serious conditions and, as a result, is considered to be a potential degradation of the level of safety of the plant. When pressurizer level drops to 18% [18.87% (rounded to 18% for Unit 3)] of span. (low level alarm set-point), level is well below the normal control band (ref. 1, 2).

This Cold Shutdown EAL represents the hot condition EAL SU6.1, in which RCS leakage is associated with Technical Specification limits. In Cold Shutdown, these limits are not applicable; hence, the use of pressurizer level as the parameter of concern in this EAL.

IPEC Basis Reference(s):

1. 2-ARP-SAF Pressurizer Low Level
2. 3-ARP-003 Pressurizer Low Level

Category: C – Cold Shutdown / Refueling System Malfunction

Subcategory: 2 – Reactor Vessel Level

Initiating Condition: RCS Leakage

EAL:

CU2.2	**Unusual Event**
Unplanned reactor vessel level drop below vessel flange (69' elev.- RVLIS 83%) (or RCS target level band if the RCS level was procedurally being controlled below the vessel flange) for ≥ 15 min. (Note 3)	

Note 3: The Emergency Director should not wait until the applicable time has elapsed, but should declare the event as soon as it is determined that the condition will likely exceed the applicable time.

Mode Applicability:

6 - Refueling

NEI 99-01 Basis:

This EAL is a precursor of more serious conditions and considered to be a potential degradation of the level of safety of the plant.

Refueling evolutions that decrease RCS water level below the RPV flange are carefully planned and procedurally controlled. An unplanned event that results in water level decreasing below the RPV flange, or below the planned RCS water level for the given evolution (if the planned RCS water level is already below the RPV flange), warrants declaration of an Unusual Event due to the reduced RCS inventory that is available to keep the core covered.

The allowance of 15 minutes was chosen because it is reasonable to assume that level can be restored within this time frame using one or more of the redundant means of refill that should be available. If level cannot be restored in this time frame then it may indicate a more serious condition exists.

Continued loss of RCS Inventory will result in escalation to the Alert emergency classification level via either CA2.1 or CA3.1.

The difference between CU2.1 and CU2.2 deals with the RCS conditions that exist between cold shutdown and refueling modes. In cold shutdown the RCS will normally be intact and standard RCS inventory and level monitoring means are available. In the refueling mode the RCS is not intact and RPV level and inventory are monitored by different means.

This EAL involves a decrease in RCS level below the top of the RPV flange that continues for 15 minutes due to an unplanned event. This EAL is not applicable to decreases in flooded reactor cavity level, which is addressed by AU2.1, until such time as the level decreases to the level of the vessel flange.

If RPV level continues to decrease and reaches the Bottom ID of the RCS hot leg then escalation to CA2.1 would be appropriate.

IPEC Basis:

Unit 2

The Reactor Vessel flange mating surface is at 69' - RVLIS 83% (ref. 1). RCS elevations are illustrated in Figure C-3 (ref. 1). RCS level can be monitored by one or more of the following (ref. 1):

- Barton level system
- Tygon level system
- Mansell Level Monitoring System (MLMS)
- Intermediate range RCS level indicator (LT-7610)
- CCR Foxboro (RCS DRAIN DOWN NARROW RANGE)
- RVLIS

Unit 3

The Reactor Vessel flange mating surface is at 69' - RVLIS 83% (ref. 2). RCS level can be monitored by one or more of the following (ref. 2):

- 32 & 34 Intermediate Leg Level Indicators (ILLI)
- Hand Held Ultrasonic Transducers
- Mansell Level Monitoring System
- Intermediate range RCS level indicator (LT-7610)
- RVLIS

IPEC Basis Reference(s):

1. 2-POP-4.2 Operation Below 20% PRZR Level with Fuel in the Reactor
2. 3-POP-4.2 Operation Below 20% PRZR Level with Fuel in the Reactor

Attachment 1 – Emergency Action Level Bases

Figure C-3 – Unit 2 Component Elevations and Levels

COMPONENT	ELEVATION	PRZR LEVEL	RVLIS	Gallons Drained	
				S/G Tubes Empty	S/G Tubes Full
Top or RVLIS	84' 2"	27%	120%	37,900	10,150
20% PRZR Level	80' 10"	20%	112%	38,750	11,000
PLACE RX Head Vent in Service	76' 6"	10%	101%	40,000	12,250
Top or RX Head	75' 10"	9%	100%	40,200	12,450
PRZR Lower Tap	73' 7"	0%	86%	41,500	13,750
Bottom of PRZR	69' 7"	0%	65%	46,000	18,250
RX Vessel Flange	69'	0%	63%	46,700	18,950
RX Head Removal	**68'**	**0%**	**61%**	**47,800**	**20,050**
	67'	0%	--	49,100	21,300
Reduced Inventory	**66'**	0%	--	50,250	22,500
	65'	0%	--	51,400 (51,666)	23,650
	64'	0%	--	52,500 (53,500)	24,750
Top of Hot Leg	63' 6"	0%	70%	(54,750)	
	63' 0"	0%		(56,375)	
Normal Draindown Level	62' 6"	0%		(59,000)	
Middle of Hot Leg	62' 0"	0%		(62,250)	
Min. Level with RHR	**61' 8"**	**0%**		**(64,500)**	

Category: C – Cold Shutdown / Refueling System Malfunction

Subcategory: 2 – Reactor Vessel Level

Initiating Condition: RCS Leakage

EAL:

CU2.3 Unusual Event

Reactor vessel level **cannot** be monitored with unexplained rise in **any** Table C-1 sump / tank level or visual observation of RCS leakage

Table C-1 Sumps / Tanks
• Containment sumps • CCW surge tank • PRT • RCDT

Mode Applicability:

6 - Refueling

NEI 99-01 Basis:

This EAL is a precursor of more serious conditions and considered to be a potential degradation of the level of safety of the plant.

Refueling evolutions that decrease RPV water level below the RPV flange are carefully planned and procedurally controlled. An unplanned event that results in water level decreasing below the RPV flange, or below the planned RPV water level for the given evolution (if the planned RPV water level is already below the RPV flange), warrants declaration of an Unusual Event due to the reduced RCS inventory that is available to keep the core covered.

The allowance of 15 minutes was chosen because it is reasonable to assume that level can be restored within this time frame using one or more of the redundant means of refill that should be available. If level cannot be restored in this time frame then it may indicate a more serious condition exists.

Continued loss of RCS inventory will result in escalation to the Alert emergency classification level via either CA2.1 or CA3.1.

This EAL addresses conditions in the refueling mode when normal means of core temperature indication and RPV level indication may not be available. Redundant means of RPV level indication will normally be installed (including the ability to monitor level visually) to assure that the ability to monitor level will not be interrupted. However, if all level indication were to be lost during a loss of RCS inventory event, the operators would need to determine that RPV inventory loss was occurring by observing sump and tank level changes. Sump and tank level increases must be evaluated against other potential sources of leakage such as cooling water sources inside the containment to ensure they are indicative of RCS leakage.

Escalation to the Alert emergency classification level would be via either CA2.1 or CA3.1.

IPEC Basis:

Unit 2 RCS elevations are illustrated in Figure C-3 (ref. 1). Unit 2 RCS level can be monitored by one or more of the following (ref. 1):

- Barton level system
- Tygon level system
- Mansell Level Monitoring System (MLMS)
- Intermediate range RCS level indicator (LT-7610)
- CCR Foxboro (RCS DRAIN DOWN NARROW RANGE)
- RVLIS

Unit 3 RCS level can be monitored by one or more of the following (ref. 2):

- 32 & 34 Intermediate Leg Level Indicators (ILLI)
- Hand Held Ultrasonic Transducers
- Mansell Level Monitoring System
- Intermediate range RCS level indicator (LT-7610)
- RVLIS

In this EAL, all water level indication is unavailable, and the Reactor Vessel inventory loss must be detected by sump or tank level changes (Table C-1) or visual observation of RCS leakage. Plant design and procedures provide the capability to detect and assess primary system leakage (ref. 3 - 9).

IPEC Basis Reference(s):

1. 2-POP-4.2 Operation Below 20% PRZR Level with Fuel in the Reactor
2. 3-POP-4.2 Operation Below 20% PRZR Level with Fuel in the Reactor
3. Unit 2 FSAR 4.2.7
4. Unit 2 FSAR 6.2.2.1.2
5. Unit 2 FSAR 9.2.2.4.3
6. Unit 3 FSAR 4.2.10
7. Unit 3 FSAR 6.7.2.3
8. 2-AOP-LEAK-1 Sudden Increase in Reactor Coolant System Leakage
9. 3-AOP-LEAK-1 Sudden Increase in Reactor Coolant System Leakage

Attachment 1 – Emergency Action Level Bases

Figure C-3 – Unit 2 Component Elevations and Levels

COMPONENT	ELEVATION	PRZR LEVEL	RVLIS	Gallons Drained	
				S/G Tubes Empty	S/G Tubes Full
Top or RVLIS	84' 2"	27%	120%	37,900	10,150
20% PRZR Level	80' 10"	20%	112%	38,750	11,000
PLACE RX Head Vent in Service	76' 6"	10%	101%	40,000	12,250
Top or RX Head	75' 10"	9%	100%	40,200	12,450
PRZR Lower Tap	73' 7"	0%	86%	41,500	13,750
Bottom of PRZR	69' 7"	0%	65%	46,000	18,250
RX Vessel Flange	69'	0%	63%	46,700	18,950
RX Head Removal	**68'**	**0%**	**61%**	**47,800**	**20,050**
	67'	0%	--	49,100	21,300
Reduced Inventory	**66'**	0%	--	50,250	22,500
	65'	0%	--	51,400 (51,666)	23,650
	64'	0%	--	52,500 (53,500)	24,750
Top of Hot Leg	63' 6"	0%	70%	(54,750)	
	63' 0"	0%		(56,375)	
Normal Draindown Level	62' 6"	0%		(59,000)	
Middle of Hot Leg	62' 0"	0%		(62,250)	
Min. Level with RHR	**61' 8"**	**0%**		**(64,500)**	

Attachment 1 – Emergency Action Level Bases

Category: C – Cold Shutdown / Refueling System Malfunction

Subcategory: 2 – RPV Level

Initiating Condition: Loss of reactor vessel inventory

EAL:

CA2.1 Alert

Reactor vessel level < bottom of the RCS hot leg (60' 4.8" elev. RVLIS 62%)

OR

Reactor vessel level **cannot** be monitored for ≥ 15 min. (Note 3) with unexplained rise in **any** Table C-1 sump / tank level or visual observation of RCS leakage

Note 3: The Emergency Director should not wait until the applicable time has elapsed, but should declare the event as soon as it is determined that the condition will likely exceed the applicable time.

Table C-1 Sumps / Tanks
• Containment sumps • CCW surge tank • PRT • RCDT

Mode Applicability:

5 - Cold Shutdown, 6 - Refueling

NEI 99-01 Basis:

This EAL serves as precursors to a loss of ability to adequately cool the fuel. The magnitude of this loss of water indicates that makeup systems have not been effective and may not be capable of preventing further RPV level decrease and potential core uncovery. This condition will result in a minimum emergency classification level of an Alert.

The Bottom ID of the RCS loop was chosen because at this level remote RCS level indication may be lost and loss of suction to decay heat removal systems has occurred. The Bottom ID of the RCS loop is the level equal to the bottom of the RPV loop penetration (not the low point of the loop).]

The inability to restore and maintain level after reaching this set-point would be indicative of a failure of the RCS barrier.

If RPV level continues to lower then escalation to Site Area Emergency will be via CS2.1.

In the cold shutdown mode, normal RPV level and RPV level instrumentation systems will usually be available. In the refueling mode, normal means of RPV level indication may not be available. Redundant means of RPV level indication will usually be installed (including the ability to monitor level visually) to assure that the ability to monitor level will not be interrupted. However, if all level indication were to be lost during a loss of RCS inventory event, the operators would need to determine that RPV inventory loss was occurring by observing sump and tank level changes. Sump and tank level increases must be evaluated against other potential sources of leakage such as cooling water sources inside the containment to ensure they are indicative of RCS leakage.

The 15-minute duration for the loss of level indication was chosen because it is half of the CS2.3 Site Area Emergency EAL duration. Significant fuel damage is not expected to occur until the core has been uncovered for greater than 1 hour per the analysis referenced in the CG1 basis. Therefore this EAL meets the definition for an Alert.

IPEC Basis:

Unit 2 RCS elevations are illustrated in Figure C-3 (ref. 1). Unit 2 RCS level can be monitored by one or more of the following (ref. 1):

- Barton level system
- Tygon level system
- Mansell Level Monitoring System (MLMS)
- Intermediate range RCS level indicator (LT-7610)
- CCR Foxboro (RCS DRAIN DOWN NARROW RANGE)
- RVLIS

Unit 3 RCS level can be monitored by one or more of the following (ref. 2):

- 32 & 34 Intermediate Leg Level Indicators (ILLI)
- Hand Held Ultrasonic Transducers
- Mansell Level Monitoring System
- Intermediate range RCS level indicator (LT-7610)
- RVLIS

Unit 2 and Unit 3 RVLIS Full Range indication of 62% corresponds to the bottom of the RCS hot leg penetration which is at 60.4' (60' 4.8") el. (ref. 3). If Reactor Vessel level cannot be monitored, the Reactor Vessel inventory loss must be detected by sump or tank level changes (Table C-1) or visual observation of RCS leakage. Plant design and procedures provide the capability to detect and assess primary system leakage (ref. 4 - 10).

IPEC Basis Reference(s):

1. 2-POP-4.2 Operation Below 20% PRZR Level with Fuel in the Reactor
2. 3-POP-4.2 Operation Below 20% PRZR Level with Fuel in the Reactor
3. RCS-15 RVLIS Full Range Level Indication Map
4. Unit 2 FSAR 4.2.7
5. Unit 2 FSAR 6.2.2.1.2
6. Unit 2 FSAR 9.2.2.4.3
7. Unit 3 FSAR 4.2.10
8. Unit 3 FSAR 6.7.2.3
9. 2-AOP-LEAK-1 Sudden Increase in Reactor Coolant System Leakage
10. 3-AOP-LEAK-1 Sudden Increase in Reactor Coolant System Leakage

Attachment 1 – Emergency Action Level Bases

Figure C-3 – Unit 2 Component Elevations and Levels

COMPONENT	ELEVATION	PRZR LEVEL	RVLIS	Gallons Drained	
				S/G Tubes Empty	S/G Tubes Full
Top or RVLIS	84' 2"	27%	120%	37,800	10,150
20% PRZR Level	80' 10"	20%	112%	38,750	11,000
PLACE RX Head Vent in Service	76' 6"	10%	101%	40,000	12,250
Top or RX Head	75' 10"	9%	100%	40,200	12,450
PRZR Lower Tap	73' 7"	0%	86%	41,500	13,750
Bottom of PRZR	69' 7"	0%	85%	46,000	18,250
RX Vessel Flange	69'	0%	83%	46,700	18,950
RX Head Removal	68'	0%	81%	47,800	20,050
	67'	0%	--	49,100	21,300
Reduced Inventory	66'	0%	--	50,250	22,500
	65'	0%	--	51,400 (51,685)	23,650
	64'	0%	--	52,500 (53,500)	24,750
Top of Hot Leg	63' 6"	0%	70%	(54,750)	
	63' 0"	0%		(56,375)	
Normal Drawdown Level	62' 6"	0%		(59,000)	
Middle of Hot Leg	62' 0"	0%		(62,250)	
Min. Level with RHR	**61' 8"**	**0%**		**(64,500)**	

Attachment 1 – Emergency Action Level Bases

Category: C – Cold Shutdown / Refueling System Malfunction

Subcategory: 2 – RPV Level

Initiating Condition: Loss of reactor vessel inventory affecting core decay heat removal capability

EAL:

CS2.1 Site Area Emergency

With Containment Closure (Note 5) **not** established, reactor vessel level < 6" below the bottom of the RCS hot leg (59' 10.8" elev.- RVLIS 60.8%)

Note 5: The site specific procedurally defined actions taken to secure containment and its associated structures, systems, and components as a functional barrier to fission product release under existing plant conditions. As applied to IPEC, Containment Closure exists when the requirements of Section 3.9.3 of Technical Specifications are met (all un-isolated flow paths are promptly closed and at least one door in each air lock is closed following an evacuation of containment).

Mode Applicability:

5 - Cold Shutdown, 6 - Refueling

NEI 99-01 Basis:

Under the conditions specified by this EAL, continued decrease in RPV level is indicative of a loss of inventory control. Inventory loss may be due to an RCS breach, pressure boundary leakage, or continued boiling in the RPV. Thus, declaration of a Site Area Emergency is warranted.

Escalation to a General Emergency is via CG2.1 or AG1.1/AG1.3.

IPEC Basis:

Unit 2 RCS elevations are illustrated in Figure C-3 (ref. 1). Unit 2 RCS level can be monitored by one or more of the following (ref. 1):

- Barton level system
- Tygon level system
- Mansell Level Monitoring System (MLMS)
- Intermediate range RCS level indicator (LT-7610)

- CCR Foxboro (RCS DRAIN DOWN NARROW RANGE)
- RVLIS

Unit 3 RCS level can be monitored by one or more of the following (ref. 2):

- 32 & 34 Intermediate Leg Level Indicators (ILLI)
- Hand Held Ultrasonic Transducers
- Mansell Level Monitoring System
- Intermediate range RCS level indicator (LT-7610)
- RVLIS

Unit 2 and Unit 3 RVLIS Full Range indication of 60.8% corresponds to six inches below the bottom of the RCS hot leg penetration which is at 59.9' (59' 10.8") el. (ref. 3). If Reactor Vessel level cannot be monitored, the Reactor Vessel inventory loss must be detected by sump or tank level changes (Table C-1). Plant design and procedures provide the capability to detect and assess primary system leakage (ref. 4 - 10).

IPEC Basis Reference(s):

1. 2-POP-4.2 Operation Below 20% PRZR Level with Fuel in the Reactor
2. 3-POP-4.2 Operation Below 20% PRZR Level with Fuel in the Reactor
3. RCS-15 RVLIS Full Range Level Indication Map
4. Unit 2 FSAR 4.2.7
5. Unit 2 FSAR 6.2.2.1.2
6. Unit 2 FSAR 9.2.2.4.3
7. Unit 3 FSAR 4.2.10
8. Unit 3 FSAR 6.7.2.3
9. 2-AOP-LEAK-1 Sudden Increase in Reactor Coolant System Leakage
10. 3-AOP-LEAK-1 Sudden Increase in Reactor Coolant System Leakage

Attachment 1 – Emergency Action Level Bases

Figure C-3 – Unit 2 Component Elevations and Levels

COMPONENT	ELEVATION	PRZR LEVEL	RVLIS	Gallons Drained	
				S/G Tubes Empty	S/G Tubes Full
Top or RVLIS	84' 2"	27%	120%	37,900	10,150
20% PRZR Level	80' 10"	20%	112%	38,750	11,000
PLACE RX Head Vent in Service	76' 6"	10%	101%	40,000	12,250
Top or RX Head	75' 10"	9%	100%	40,200	12,450
PRZR Lower Tap	73' 7"	0%	86%	41,500	13,750
Bottom of PRZR	69' 7"	0%	55%	46,000	18,250
RX Vessel Flange	69'	0%	83%	46,700	18,950
RX Head Removal	**68'**	**0%**	**81%**	**47,800**	**20,050**
	67'	0%	--	49,100	21,300
Reduced Inventory	**66'**	0%	--	50,250	22,500
	65'	0%	--	51,400 (51,666)	23,650
	64'	0%	--	52,500 (53,500)	24,750
Top of Hot Leg	63' 6"	0%	70%	(54,750)	
	63' 0"	0%		(56,375)	
Normal Draindown Level	62' 6"	0%		(59,000)	
Middle of Hot Leg	62' 0"	0%		(62,250)	
Min. Level with RHR	**61' 8"**	**0%**		**(64,500)**	

Category: C – Cold Shutdown / Refueling System Malfunction

Subcategory: 2 – RPV Level

Initiating Condition: Loss of reactor vessel inventory affecting core decay heat removal capability

EAL:

CS2.2 Site Area Emergency

With Containment Closure (Note 5) established, reactor vessel level < top of active fuel (57' 9.6" elev.- RVLIS 56%)

Note 5: The site specific procedurally defined actions taken to secure containment and its associated structures, systems, and components as a functional barrier to fission product release under existing plant conditions. As applied to IPEC, Containment Closure exists when the requirements of Section 3.9.3 of Technical Specifications are met (all un-isolated flow paths are promptly closed and at least one door in each air lock is closed following an evacuation of containment).

Mode Applicability:

5 - Cold Shutdown, 6 - Refueling

NEI 99-01 Basis:

Under the conditions specified by this EAL, continued decrease in RPV level is indicative of a loss of inventory control. Inventory loss may be due to an RCS breach, pressure boundary leakage, or continued boiling in the RPV. Thus, declaration of a Site Area Emergency is warranted.

Escalation to a General Emergency is via CG2.1 or AG1.1/AG1.3.

IPEC Basis:

Unit 2 RCS elevations are illustrated in Figure C-3 (ref. 1). Unit 2 RCS level can be monitored by one or more of the following (ref. 1):

- Barton level system
- Tygon level system
- Mansell Level Monitoring System (MLMS)
- Intermediate range RCS level indicator (LT-7610)

- CCR Foxboro (RCS DRAIN DOWN NARROW RANGE)
- RVLIS

Unit 3 RCS level can be monitored by one or more of the following (ref. 2):

- 32 & 34 Intermediate Leg Level Indicators (ILLI)
- Hand Held Ultrasonic Transducers
- Mansell Level Monitoring System
- Intermediate range RCS level indicator (LT-7610)
- RVLIS

Unit 2 and Unit 3 RVLIS Full Range indication of 56% corresponds to top of active fuel (57.8' [57' 9.6"] elev.) (ref. 3). If Reactor Vessel level cannot be monitored, the Reactor Vessel inventory loss must be detected by sump or tank level changes (Table C-1). Plant design and procedures provide the capability to detect and assess primary system leakage (ref. 4 - 10).

IPEC Basis Reference(s):

1. 2-POP-4.2 Operation Below 20% PRZR Level with Fuel in the Reactor
2. 3-POP-4.2 Operation Below 20% PRZR Level with Fuel in the Reactor
3. RCS-15 RVLIS Full Range Level Indication Map
4. Unit 2 FSAR 4.2.7
5. Unit 2 FSAR 6.2.2.1.2
6. Unit 2 FSAR 9.2.2.4.3
7. Unit 3 FSAR 4.2.10
8. Unit 3 FSAR 6.7.2.3
9. 2-AOP-LEAK-1 Sudden Increase in Reactor Coolant System Leakage
10. 3-AOP-LEAK-1 Sudden Increase in Reactor Coolant System Leakage

Attachment 1 – Emergency Action Level Bases

Figure C-3 – Unit 2 Component Elevations and Levels

COMPONENT	ELEVATION	PRZR LEVEL	RVLIS	Gallons Drained	
				S/G Tubes Empty	S/G Tubes Full
Top or RVLIS	84' 2"	27%	120%	37,800	10,150
20% PRZR Level	80' 10"	20%	112%	38,750	11,000
PLACE RX Head Vent in Service	76' 6"	10%	101%	40,000	12,250
Top or RX Head	75' 10"	9%	100%	40,200	12,450
PRZR Lower Tap	73' 7"	0%	86%	41,500	13,750
Bottom of PRZR	69' 7"	0%	85%	45,000	16,250
RX Vessel Flange	69'	0%	83%	46,700	18,950
RX Head Removal	**68'**	**0%**	**81%**	**47,800**	**20,050**
	67'	0%	--	49,100	21,300
Reduced Inventory	66'	0%	--	50,250	22,500
	65'	0%	--	51,400 (51,668)	23,650
	64'	0%	--	52,500 (53,500)	24,750
Top of Hot Leg	63' 6"	0%	70%	(54,750)	
	63' 0"	0%		(56,375)	
Normal Draindown Level	62' 6"	0%		(59,000)	
Middle of Hot Leg	62' 0"	0%		(62,250)	
Min. Level with RHR	**61' 8"**	**0%**		**(64,500)**	

Attachment 1 – Emergency Action Level Bases

Category: C – Cold Shutdown / Refueling System Malfunction

Subcategory: 2 – RPV Level

Initiating Condition: Loss of reactor vessel inventory affecting core decay heat removal capability

EAL:

CS2.3 Site Area Emergency

Reactor vessel level **cannot** be monitored for ≥ 30 min. (Note 3) with a loss of inventory as indicated by **any** of the following:

- Containment High Range Radiation Monitor reading upscale
- Unexplained rise in **any** Table C-1 sump / tank level of visual observation of RCS leakage
- Erratic Source Range Monitor indication

Note 3: The Emergency Director should not wait until the applicable time has elapsed, but should declare the event as soon as it is determined that the condition will likely exceed the applicable time.

Table C-1 Sumps / Tanks
• Containment sumps • CCW surge tank • PRT • RCDT

Mode Applicability:

5 - Cold Shutdown, 6 - Refueling

NEI 99-01 Basis:

Under the conditions specified by this EAL, continued decrease in RPV level is indicative of a loss of inventory control. Inventory loss may be due to an RCS breach, pressure boundary leakage, or continued boiling in the RPV. Thus, declaration of a Site Area Emergency is warranted.

Escalation to a General Emergency is via CG2.1 or AG1.1/AG1.3.

In the cold shutdown mode, normal RPV level and RPV level instrumentation systems will usually be available. In the refueling mode, normal means of RPV level indication may not be available. Redundant means of RPV level indication will usually be installed (including the ability to monitor level visually) to assure that the ability to monitor level will not be interrupted. However, if all level indication were to be lost during a loss of RCS inventory event, the operators would need to determine that RPV inventory loss was occurring by observing sump and tank level changes. Sump and tank level increases must be evaluated against other potential sources of leakage such as cooling water sources inside the containment to ensure they are indicative of RCS leakage.

The 30-minute duration allows sufficient time for actions to be performed to recover inventory control equipment.

As water level in the RPV lowers, the dose rate above the core will increase. The dose rate due to this core shine should result in containment radiation monitor indication and possible alarm.

Post-TMI studies indicated that the installed nuclear instrumentation will operate erratically when the core is uncovered and that this should be used as a tool for making such determinations.

IPEC Basis:

Unit 2 RCS elevations are illustrated in Figure C-3 (ref. 1). Unit 2 RCS level can be monitored by one or more of the following (ref. 1):

- Barton level system
- Tygon level system
- Mansell Level Monitoring System (MLMS)
- Intermediate range RCS level indicator (LT-7610)
- CCR Foxboro (RCS DRAIN DOWN NARROW RANGE)
- RVLIS

Unit 3 RCS level can be monitored by one or more of the following (ref. 2):

- 32 & 34 Intermediate Leg Level Indicators (ILLI)
- Hand Held Ultrasonic Transducers
- Mansell Level Monitoring System
- Intermediate range RCS level indicator (LT-7610)
- RVLIS

In this EAL, all water level indication is unavailable, and the Reactor Vessel inventory loss must be detected by the following:

- Containment High Range Radiation Monitor reading upscale (meaning the monitor is reading above it's normal on scale bugged level)
- Sump or tank level changes (Table C-1) or visual observation of RCS leakage : Plant design and procedures provide the capability to detect and assess primary system leakage (ref. 3 - 9).

- Erratic Source Range Monitor indication: Post-TMI studies indicate that the installed nuclear instrumentation will operate erratically when the core is uncovered and source range monitors can be used as a tool for making such determinations. Figure C-4 shows the response of the source range monitor during the first few hours of the TMI-2 accident. The instrument reported an increasing signal about 30 minutes into the accident. At this time, the reactor coolant pumps were running and the core was adequately cooled as indicated by the core outlet thermocouples. Hence, the increasing signal was the result of an increasing two-phase void fraction in the reactor core and vessel down-comer and the reduced shielding that the two-phase mixture provides to the source range monitor (ref. 10, 11). The two source range monitor channels indicate the source range neutron flux and startup rate and provide high flux level reactor trip and alarm signals to the reactor control and protection system. They are used at shutdown to provide audible alarms in the reactor containment and central control room of any inadvertent increase in reactivity. An audible count rate signal is used during initial phases of startup and is audible in both the reactor containment and central control room. Mounted on the front panel of the source range channel is a neutron flux level indicator calibrated in terms of count rate level (1 to 10^6 cps). Mounted on the control board is a neutron count rate level indicator (1 to 10^6 cps). Isolated neutron flux signals are available for recording by the nuclear instrumentation system recorder and startup rate computation. (ref 12, 13)

IPEC Basis Reference(s):

1. 2-POP-4.2 Operation Below 20% PRZR Level with Fuel in the Reactor
2. 3-POP-4.2 Operation Below 20% PRZR Level with Fuel in the Reactor
3. Unit 2 FSAR 4.2.7
4. Unit 2 FSAR 6.2.2.1.2
5. Unit 2 FSAR 9.2.2.4.3
6. Unit 3 FSAR 4.2.10
7. Unit 3 FSAR 6.7.2.3
8. 2-AOP-LEAK-1 Sudden Increase in Reactor Coolant System Leakage
9. 3-AOP-LEAK-1 Sudden Increase in Reactor Coolant System Leakage
10. Severe Accident Management Guidance Technical Basis Report, Volume 1: Candidate High-Level Actions and Their Effects, pgs. 2-18, 2-19
11. Nuclear Safety Analysis Center (NSAC), 1980, "Analysis of Three Mile Island - Unit 2 Accident," NSAC-1
12. Unit 2 FSAR 7.4.2.1.3
13. Unit 3 FSAR 7.4.2

Attachment 1 – Emergency Action Level Bases

Figure C-3 – Unit 2 Component Elevations and Levels

COMPONENT	ELEVATION	PRZR LEVEL	RVLIS	Gallons Drained	
				S/G Tubes Empty	S/G Tubes Full
Top or RVLIS	84' 2"	27%	120%	37,900	10,150
20% PRZR Level	80' 10"	20%	112%	38,750	11,000
PLACE RX Head Vent in Service	76' 6"	10%	101%	40,000	12,250
Top or RX Head	75' 10"	9%	100%	40,200	12,450
PRZR Lower Tap	73' 7"	0%	86%	41,500	13,750
Bottom of PRZR	69' 7"	0%	85%	46,000	18,250
RX Vessel Flange	69'	0%	83%	46,700	18,950
RX Head Removal	**68'**	**0%**	**81%**	**47,800**	**20,050**
	67'	0%	--	49,100	21,300
Reduced Inventory	**66'**	0%	--	50,250	22,500
	65'	0%	--	51,400 (51,686)	23,680
	64'	0%	--	52,500 (53,500)	24,750
Top of Hot Leg	63' 6"	0%	70%	(54,750)	
	63' 0"	0%		(56,375)	
Normal Draindown Level	62' 6"	0%		(59,000)	
Middle of Hot Leg	62' 0"	0%		(62,250)	
Min. Level with RHR	**61' 8"**	**0%**		**(64,500)**	

Figure C-4 – Response of the TMI-2 Source Range Measurement During the First Six Hours of the Accident (ref. 10, 11)

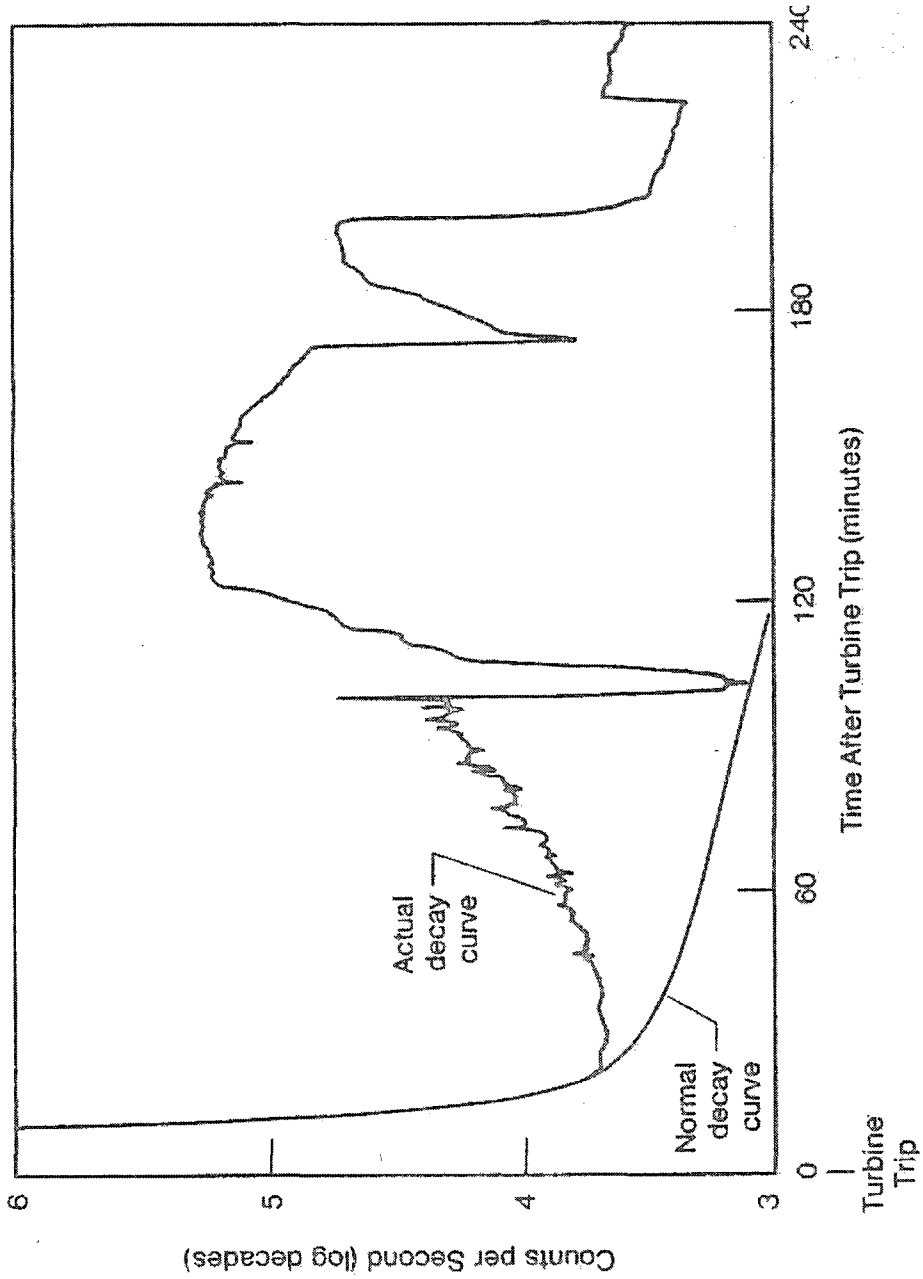

Category: C – Cold Shutdown / Refueling System Malfunction

Subcategory: 2 – RPV Level

Initiating Condition: Loss of reactor vessel inventory affecting fuel clad integrity with Containment challenged

EAL:

CG2.1 General Emergency

Reactor vessel level < top of active fuel (57' 9.6" elev.- RVLIS 56%) for ≥ 30 min. (Note 3)

AND

Any Containment Challenge indication, Table C-5

Note 3: The Emergency Director should not wait until the applicable time has elapsed, but should declare the event as soon as it is determined that the condition will likely exceed the applicable time.

Table C-5 Containment Challenge Indications
• Containment Closure (Note 5) **not** established • Containment hydrogen concentration ≥ 4% • Unplanned rise in containment pressure

Note 5: The site specific procedurally defined actions taken to secure containment and its associated structures, systems, and components as a functional barrier to fission product release under existing plant conditions. As applied to IPEC, Containment Closure exists when the requirements of Section 3.9.3 of Technical Specifications are met (all un-isolated flow paths are promptly closed and at least one door in each air lock is closed following an evacuation of containment).

Mode Applicability:

5 - Cold Shutdown, 6 - Refueling

NEI 99-01 Basis:

This EAL represents the inability to restore and maintain RPV level to above the top of active fuel with containment challenged. Fuel damage is probable if RPV level cannot be restored, as available decay heat will cause boiling, further reducing the RPV level. With the containment breached or challenged then the potential for unmonitored fission product release to the environment is high. This represents a direct path for radioactive inventory to be released to the environment. This is consistent with the definition of a GE. The GE is declared on the occurrence of the loss or imminent loss of function of <u>all three</u> barriers.

These EALs are based on concerns raised by Generic Letter 88-17, Loss of Decay Heat Removal, SECY 91-283, Evaluation of Shutdown and Low Power Risk Issues, NUREG-1449, Shutdown and Low-Power Operation at Commercial Nuclear Power Plants in the United States, and, NUMARC 91-06, Guidelines for Industry Actions to Assess Shutdown Management.

A number of variables can have a significant impact on heat removal capability challenging the fuel clad barrier. Examples include mid-loop, reduced level/flange level, head in place, cavity flooded, RCS venting strategy, decay heat removal system design, vortexing pre-disposition, steam generator U-tube draining.

Analysis indicates that core damage may occur within an hour following continued core uncovery therefore, 30 minutes was conservatively chosen.

If containment closure is re-established prior to exceeding the 30 minute core uncovery time limit then escalation to GE would not occur.

In the early stages of a core uncovery event, it is unlikely that hydrogen buildup due to a core uncovery could result in an explosive mixture of dissolved gasses in containment. However, containment monitoring and/or sampling should be performed to verify this assumption and a General Emergency declared if it is determined that an explosive mixture exists.

IPEC Basis:

Unit 2 RCS elevations are illustrated in Figure C-3 (ref. 1). Unit 2 RCS level can be monitored by one or more of the following (ref. 1):

- Barton level system
- Tygon level system
- Mansell Level Monitoring System (MLMS)
- Intermediate range RCS level indicator (LT-7610)
- CCR Foxboro (RCS DRAIN DOWN NARROW RANGE)

- RVLIS

Unit 3 RCS level can be monitored by one or more of the following (ref. 2):

- 32 & 34 Intermediate Leg Level Indicators (ILLI)
- Hand Held Ultrasonic Transducers
- Mansell Level Monitoring System
- Intermediate range RCS level indicator (LT-7610)
- RVLIS

RVLIS Full Range indication of 56% corresponds to top of active fuel (57.8' [57' 9.6"] elev.) (ref. 3).

Three indications are associated with a challenge to Containment:

- Containment closure is the action taken to secure containment and its associated structures, systems, and components as a functional barrier to fission product release under existing plant conditions. As applied to IPEC, Containment Closure is established when Containment Integrity is established per Section 3.9.3 of Technical Specifications. During movement of recently irradiated fuel assemblies within containment, a release of fission product radioactivity within containment will be restricted from escaping to the environment when the LCO requirements are met. In MODES 1, 2, 3, and 4, this is accomplished by maintaining containment OPERABLE as described in LCO 3.6.1, "Containment." In Cold Shutdown and Refuel modes, however, the potential for containment pressurization as a result of an accident is not likely; therefore, requirements to isolate the containment from the outside atmosphere can be less stringent. The LCO requirements are referred to as "containment closure" rather than "containment OPERABILITY." (ref. 4)
- In the early stages of a core uncovery event, it is unlikely that hydrogen buildup due to a core uncovery could result in an explosive mixture of dissolved gases in containment.

However, containment monitoring and/or sampling should be performed to verify this assumption and a General Emergency declared if it is determined that an explosive mixture exists. A combustible mixture can be formed when hydrogen gas concentration in the containment atmosphere is greater than 4% by volume (ref. 5, 6). All hydrogen measurements are referenced to concentrations in dry air even though the actual containment environment may contain significant steam concentrations. Unit 2 Containment hydrogen analyzers AIT-5109-1 and AIT-5109-1 display hydrogen concentration and alarm at 4% hydrogen concentration (ref. 9). For Unit 3, The Containment Hydrogen Concentration Measurement System is used to monitor the post-accident hydrogen concentration. Two redundant sample systems are installed. One unit samples the plenum chambers of containment recirculation fans 32 and 35. The second unit samples the plenum chambers of recirculation fans 31, 33 and 34. (ref. 10)

- An unplanned pressurization that can breach the containment barrier signifies a challenge to the containment pressure retaining capability which is dependent on the status of the containment. If containment integrity is established for full power operation, a breach could occur if the design containment pressure is exceeded (47 psig). For this condition, a small unplanned pressure rise above atmospheric pressure does not challenge containment. If in refueling operations, however, a breach could occur if the unplanned pressure rise exceeded the capability of a temporary containment seal. This would occur at a much lower pressure than the containment design pressure. Use of the verb "...can breach...: instead of "breaches" provides the Emergency Director with the latitude to assess the magnitude and rate of the containment pressure rise with respect to the barrier status (for the existing operating mode) and determine that the containment challenge exists due to elevated pressure either before or at the time that the actual breach of the barrier occurs. (ref. 7, 8)

IPEC Basis Reference(s):

1. 2-POP-4.2 Operation Below 20% PRZR Level with Fuel in the Reactor
2. 3-POP-4.2 Operation Below 20% PRZR Level with Fuel in the Reactor
3. RCS-15 RVLIS Full Range Level Indication Map
4. Technical Specifications B3.9.3
5. 2-FR-C.1 RESPONSE TO INADEQUATE CORE COOLING
6. 3-FR-C.1 RESPONSE TO INADEQUATE CORE COOLING
7. 2-F-0.5 CONTAINMENT
8. 3-F-0.5 CONTAINMENT
9. 2-ARP-043 Accident Assessment Panel 1
10. SOP-SS-4 Containment Hydrogen Measurement System

Attachment 1 – Emergency Action Level Bases

Figure C-3 – Unit 2 Component Elevations and Levels

COMPONENT	ELEVATION	PRZR LEVEL	RVLIS	Gallons Drained	
				S/G Tubes Empty	S/G Tubes Full
Top or RVLIS	84' 2"	27%	120%	37,900	10,150
20% PRZR Level	80' 10"	20%	112%	38,750	11,000
PLACE RX Head Vent in Service	76' 6"	10%	101%	40,000	12,250
Top or RX Head	75' 10"	9%	100%	40,200	12,450
PRZR Lower Tap	73' 7"	0%	86%	41,500	13,750
Bottom of PRZR	69' 7"	0%	85%	46,000	18,250
RX Vessel Flange	69'	0%	83%	46,700	18,950
RX Head Removal	**68'**	**0%**	**51%**	**47,800**	**20,050**
	67'	0%	--	49,100	21,300
Reduced Inventory	**66'**	0%	--	50,250	22,500
	65'	0%	--	51,400 (51,656)	23,650
	64'	0%	--	52,500 (53,500)	24,750
Top of Hot Leg	63' 6"	0%	70%	(54,750)	
	63' 0"	0%		(56,375)	
Normal Draindown Level	62' 6"	0%		(59,000)	
Middle of Hot Leg	62' 0"	0%		(62,250)	
Min. Level with RHR	**61' 8"**	**0%**		**(64,500)**	

Attachment 1 – Emergency Action Level Bases

Category: C – Cold Shutdown / Refueling System Malfunction

Subcategory: 2 – RPV Level

Initiating Condition: Loss of RPV inventory affecting fuel clad integrity with Containment challenged

EAL:

CG2.2 General Emergency

Reactor vessel level cannot be monitored for ≥ 30 min. (Note 3)with core uncovery indicated by **ANY** of the following:

- Containment High Range Radiation Monitor reading upscale
- Unexplained rise in **any** Table C-1 sump / tank level or visual observation of RCS leakage
- Erratic Source Range Monitor indication

AND

Any Containment Challenge indication, Table C-5

Note 3: The Emergency Director should not wait until the applicable time has elapsed, but should declare the event as soon as it is determined that the condition will likely exceed the applicable time.

Table C-1 Sumps / Tanks
• Containment sumps • CCW surge tank • PRT • RCDT

Table C-5 Containment Challenge Indications
• Containment Closure (Note 5) **not** established • Containment hydrogen concentration ≥ 4% • Unplanned rise in containment pressure

Note 5: The site specific procedurally defined actions taken to secure containment and its associated structures, systems, and components as a functional barrier to fission product release under existing plant conditions. As applied to IPEC, Containment Closure exists when the requirements of Section 3.9.3 of Technical Specifications are met (all un-isolated flow paths are promptly closed and at least one door in each air lock is closed following an evacuation of containment).

Mode Applicability:

5 - Cold Shutdown, 6 - Refueling

NEI 99-01 Basis:

This EAL represents the inability to restore and maintain reactor vessel level to above the top of active fuel with containment challenged. Fuel damage is probable if reactor vessel level cannot be restored, as available decay heat will cause boiling, further reducing the reactor vessel level. With the containment breached or challenged then the potential for unmonitored fission product release to the environment is high. This represents a direct path for radioactive inventory to be released to the environment. This is consistent with the definition of a General Emergency. The General Emergency is declared on the occurrence of the loss or imminent loss of function of <u>all three</u> barriers.

A number of variables can have a significant impact on heat removal capability challenging the fuel clad barrier. Examples include: mid-loop, reduced level/flange level, head in place, cavity flooded, RCS venting strategy, decay heat removal system design, vortexing pre-disposition and steam generator U-tube draining.

Analysis indicates that core damage may occur within an hour following continued core uncovery therefore, 30 minutes was conservatively chosen.

If containment closure is re-established prior to exceeding the 30 minute core uncovery time limit then escalation to General Emergency would not occur.

In the early stages of a core uncovery event, it is unlikely that hydrogen buildup due to a core uncovery could result in an explosive mixture of dissolved gasses in Containment. However, Containment monitoring and/or sampling should be performed to verify this assumption and a General Emergency declared if it is determined that an explosive mixture exists.

Sump and tank level increases must be evaluated against other potential sources of leakage such as cooling water sources inside the containment to ensure they are indicative of RCS leakage.

In the cold shutdown mode, normal RCS level and reactor vessel level instrumentation systems will usually be available. In the Refueling Mode, normal means of reactor vessel level indication may not be available. Redundant means of reactor vessel level indication will usually be installed (including the ability to monitor level visually) to assure that the ability to monitor level will not be interrupted. However, if all level indication were to be lost during a loss of RCS inventory event, the operators would need to determine that reactor vessel inventory loss was occurring by observing sump and tank level changes. Sump and tank level increases must be evaluated against other potential sources of leakage such as cooling water sources inside the containment to ensure they are indicative of RCS leakage.

As water level in the reactor vessel lowers, the dose rate above the core will increase. The dose rate due to this core shine should result in Containment High Range monitor indication and possible alarm.

Post-TMI studies indicated that the installed nuclear instrumentation will operate erratically when the core is uncovered and that this should be used as a tool for making such determinations.

IPEC Basis:

Unit 2 RCS elevations are illustrated in Figure C-3 (ref. 1). Unit 2 RCS level can be monitored by one or more of the following (ref. 1):

- Barton level system
- Tygon level system
- Mansell Level Monitoring System (MLMS)
- Intermediate range RCS level indicator (LT-7610)
- CCR Foxboro (RCS DRAIN DOWN NARROW RANGE)
- RVLIS

Unit 3 RCS level can be monitored by one or more of the following (ref. 2):

- 32 & 34 Intermediate Leg Level Indicators (ILLI)
- Hand Held Ultrasonic Transducers
- Mansell Level Monitoring System
- Intermediate range RCS level indicator (LT-7610)
- RVLIS

In this EAL, all water level indication is unavailable, and the Reactor Vessel inventory loss must be detected by the following:

- Containment High Range Radiation Monitor reading upscale (meaning the monitor is reading above it's normal on scale bugged level)
- Sump or tank level changes (Table C-1): Plant design and procedures provide the capability to detect and assess primary system leakage (ref. 3 - 9).
- Erratic Source Range Monitor indication: Post-TMI studies indicate that the installed nuclear instrumentation will operate erratically when the core is uncovered and source

range monitors can be used as a tool for making such determinations. Figure C-4 shows the response of the source range monitor during the first few hours of the TMI-2 accident. The instrument reported an increasing signal about 30 minutes into the accident. At this time, the reactor coolant pumps were running and the core was adequately cooled as indicated by the core outlet thermocouples. Hence, the increasing signal was the result of an increasing two-phase void fraction in the reactor core and vessel down-comer and the reduced shielding that the two-phase mixture provides to the source range monitor (ref. 10, 11). The two source range monitor channels indicate the source range neutron flux and startup rate and provide high flux level reactor trip and alarm signals to the reactor control and protection system. They are used at shutdown to provide audible alarms in the reactor containment and central control room of any inadvertent increase in reactivity. An audible count rate signal is used during initial phases of startup and is audible in both the reactor containment and central control room. Mounted on the front panel of the source range channel is a neutron flux level indicator calibrated in terms of count rate level (1 to 10^6 cps). Mounted on the control board is a neutron count rate level indicator (1 to 10^6 cps). Isolated neutron flux signals are available for recording by the nuclear instrumentation system recorder and startup rate computation. (ref 12, 13)

Three indications are associated with a challenge to Containment:

- Containment closure is the action taken to secure containment and its associated structures, systems, and components as a functional barrier to fission product release under existing plant conditions. As applied to IPEC, Containment Closure exists when the requirements are met per Section 3.9.3 of Technical Specifications. During movement of recently irradiated fuel assemblies within containment, a release of fission product radioactivity within containment will be restricted from escaping to the environment when the LCO requirements are met. In MODES 1, 2, 3, and 4, this is accomplished by maintaining containment OPERABLE as described in LCO 3.6.1, "Containment." In Cold Shutdown and Refuel modes, however, the potential for

containment pressurization as a result of an accident is not likely; therefore, requirements to isolate the containment from the outside atmosphere can be less stringent. The LCO requirements are referred to as "containment closure" rather than "containment OPERABILITY." (ref. 14)

- In the early stages of a core uncovery event, it is unlikely that hydrogen buildup due to a core uncovery could result in an explosive mixture of dissolved gases in containment. However, containment monitoring and/or sampling should be performed to verify this assumption and a General Emergency declared if it is determined that an explosive mixture exists. A combustible mixture can be formed when hydrogen gas concentration in the containment atmosphere is greater than 4% by volume (ref. 15, 16). All hydrogen measurements are referenced to concentrations in dry air even though the actual containment environment may contain significant steam concentrations.

- An unplanned pressurization that can breach the containment barrier signifies a challenge to the containment pressure retaining capability which is dependent on the status of the containment. If containment integrity is established for full power operation, a breach could occur if the design containment pressure is exceeded (47 psig). For this condition, a small unplanned pressure rise above atmospheric pressure does not challenge containment. If in refueling operations, however, a breach could occur if the unplanned pressure rise exceeded the capability of a temporary containment seal. This would occur at a much lower pressure than the containment design pressure. Use of the verb "...can breach...: instead of "breaches" provides the Emergency Director with the latitude to assess the magnitude and rate of the containment pressure rise with respect to the barrier status (for the existing operating mode) and determine that the containment challenge exists due to elevated pressure either before or at the time that the actual breach of the barrier occurs. (ref. 17, 18)

IPEC Basis Reference(s):

1. 2-POP-4.2 Operation Below 20% PRZR Level with Fuel in the Reactor
2. 3-POP-4.2 Operation Below 20% PRZR Level with Fuel in the Reactor

3. Unit 2 FSAR 4.2.7
4. Unit 2 FSAR 6.2.2.1.2
5. Unit 2 FSAR 9.2.2.4.3
6. Unit 3 FSAR 4.2.10
7. Unit 3 FSAR 6.7.2.3
8. 2-AOP-LEAK-1 Sudden Increase in Reactor Coolant System Leakage
9. 3-AOP-LEAK-1 Sudden Increase in Reactor Coolant System Leakage
10. Severe Accident Management Guidance Technical Basis Report, Volume 1: Candidate High-Level Actions and Their Effects, pgs. 2-18, 2-19
11. Nuclear Safety Analysis Center (NSAC), 1980, "Analysis of Three Mile Island - Unit 2 Accident," NSAC-1
12. Unit 2 FSAR 7.4.2.1.3
13. Unit 3 FSAR 7.4.2
14. Technical Specifications B3.9.3
15. 2-FR-C.1 RESPONSE TO INADEQUATE CORE COOLING
16. 3-FR-C.1 RESPONSE TO INADEQUATE CORE COOLING
17. 2-F-0.5 CONTAINMENT
18. 3-F-0.5 CONTAINMENT

Attachment 1 – Emergency Action Level Bases

Figure C-3 – Unit 2 Component Elevations and Levels

COMPONENT	ELEVATION	PRZR LEVEL	RVLIS	Gallons Drained	
				S/G Tubes Empty	S/G Tubes Full
Top or RVLIS	84' 2"	27%	120%	37,900	10,150
20% PRZR Level	80' 10"	20%	112%	38,750	11,000
PLACE RX Head Vent In Service	76' 6"	10%	101%	40,000	12,250
Top or RX Head	75' 10"	9%	100%	40,200	12,450
PRZR Lower Tap	73' 7"	0%	86%	41,500	13,750
Bottom of PRZR	69' 7"	0%	85%	46,000	18,250
RX Vessel Flange	69'	0%	83%	46,700	18,950
RX Head Removal	**68'**	**0%**	**81%**	**47,800**	**20,050**
	67'	0%	--	49,100	21,300
Reduced Inventory	**66'**	0%	--	50,250	22,500
	65'	0%	--	51,400 (51,666)	23,650
	64'	0%	--	52,500 (53,500)	24,750
Top of Hot Leg	63' 6"	0%	70%	(54,750)	
	63' 0"	0%		(56,375)	
Normal Draindown Level	62' 6"	0%		(59,000)	
Middle of Hot Leg	62' 0"	0%		(62,250)	
Min. Level with RHR	**61' 8"**	**0%**		**(64,500)**	

Figure C-4 – Response of the TMI-2 Source Range Measurement During the First Six Hours of the Accident (ref. 10, 11)

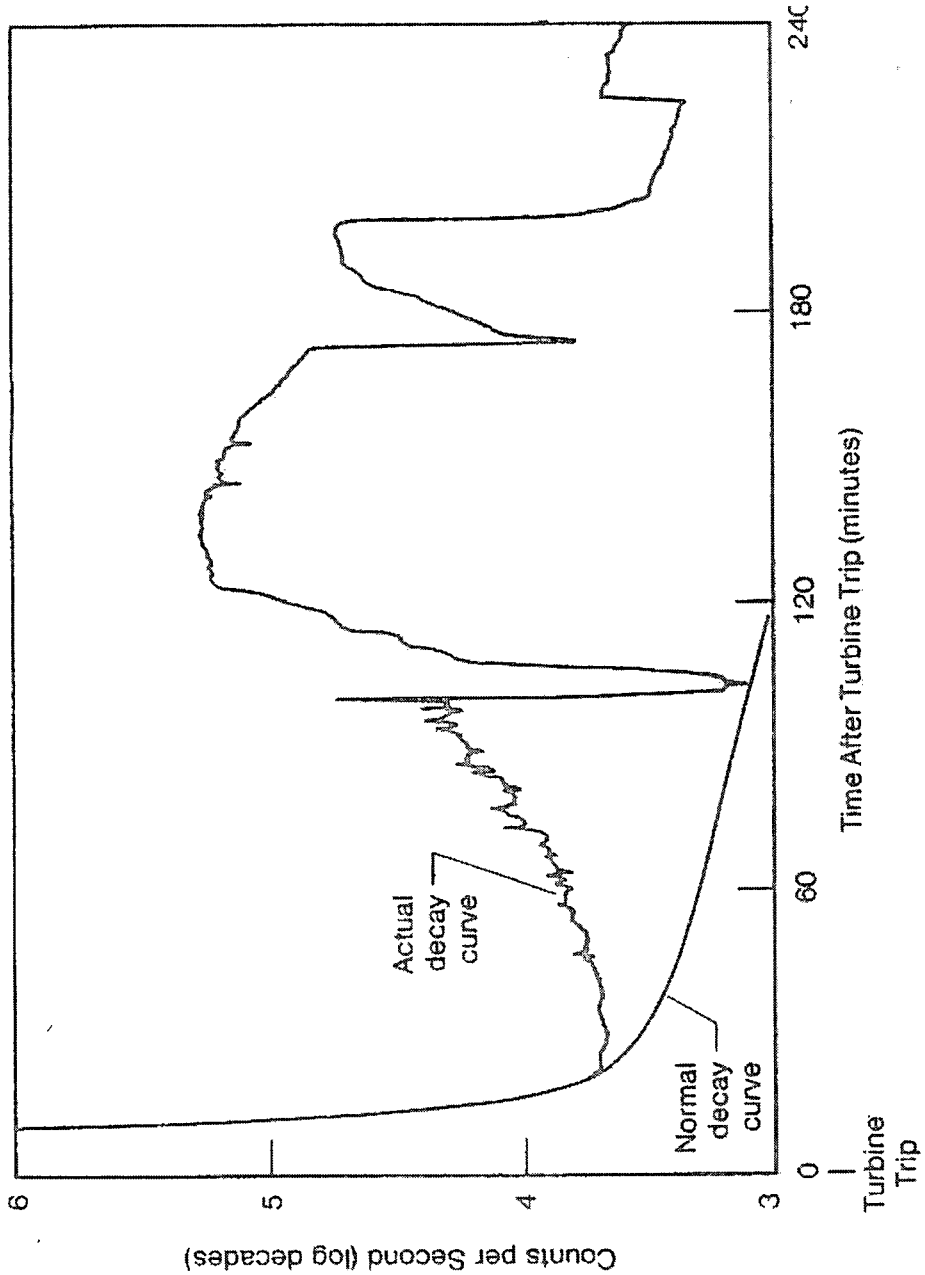

Category: C – Cold Shutdown / Refueling System Malfunction

Subcategory: 3 – RCS Temperature

Initiating Condition: Unplanned loss of decay heat removal capability with irradiated fuel in the reactor vessel

EAL:

CU3.1	**Unusual Event**
Any unplanned event resulting in RCS temperature > 200°F due to loss of decay heat removal capability	

Mode Applicability:

5 - Cold Shutdown, 6 - Refueling

NEI 99-01 Basis:

This EAL is be a precursor of more serious conditions and, as a result, is considered to be a potential degradation of the level of safety of the plant. In cold shutdown the ability to remove decay heat relies primarily on forced cooling flow. Operation of the systems that provide this forced cooling may be jeopardized due to the unlikely loss of electrical power or RCS inventory. Since the RCS usually remains intact in the cold shutdown mode a large inventory of water is available to keep the core covered.

Entry into Cold Shutdown conditions may be attained within hours of operating at power. Entry into the Refueling mode procedurally may not occur for many hours after the reactor has been shut down. Thus the heat up threat and therefore the threat to damaging the fuel clad may be lower for events that occur in the Refueling mode with irradiated fuel in the RPV (note that the heat up threat could be lower for cold shutdown conditions if the entry into Cold Shutdown was following a refueling). In addition, the operators should be able to monitor RCS temperature and RPV level so that escalation to the alert level via CA2.1 or CA3.1 will occur if required.

During refueling the level in the RPV will normally be maintained above the RPV flange. Refueling evolutions that decrease water level below the RPV flange are carefully planned and

procedurally controlled. Loss of forced decay heat removal at reduced inventory may result in more rapid increases in RCS temperatures depending on the time since shutdown.

IPEC Basis:

Several instruments are capable of providing indication of RCS temperature with respect to the Technical Specification cold shutdown temperature limit (200°F, ref. 1). These include cold and hot leg RTDs, RHR heat exchanger inlet temperature, reactor vessel metal temperatures and core exit thermocouples (ref. 2, 3). Heat up and Cool down rate limitations are provided in Technical Specifications (ref. 4, 5).

IPEC Basis Reference(s):

1. Technical Specifications Table 1.1-1
2. 2-POP-4.2 Operation Below 20% PRZR Level with Fuel in the Reactor
3. 3-POP-4.2 Operation Below 20% PRZR Level with Fuel in the Reactor
4. Technical Specifications 3.4.3
5. Technical Specifications 3.4.9.2

Attachment 1 – Emergency Action Level Bases

Category: C – Cold Shutdown / Refueling System Malfunction

Subcategory: 3 – RCS Temperature

Initiating Condition: Loss of decay heat removal capability with irradiated fuel in the reactor vessel

EAL:

CU3.2	**Unusual Event**
Loss of **all** RCS temperature and reactor vessel level indication for ≥ 15 min. (Note 3)	

Note 3: The Emergency Director should not wait until the applicable time has elapsed, but should declare the event as soon as it is determined that the condition will likely exceed the applicable time.

Mode Applicability:

5 - Cold Shutdown, 6 - Refueling

NEI 99-01 Basis:

This EAL is be a precursor of more serious conditions and, as a result, is considered to be a potential degradation of the level of safety of the plant. In cold shutdown the ability to remove decay heat relies primarily on forced cooling flow. Operation of the systems that provide this forced cooling may be jeopardized due to the unlikely loss of electrical power or RCS inventory. Since the RCS usually remains intact in the cold shutdown mode a large inventory of water is available to keep the core covered.

Entry into Cold Shutdown conditions may be attained within hours of operating at power. Entry into the Refueling mode procedurally may not occur for many hours after the reactor has been shut down. Thus the heat up threat and therefore the threat to damaging the fuel clad may be lower for events that occur in the Refueling mode with irradiated fuel in the RPV (note that the heat up threat could be lower for cold shutdown conditions if the entry into Cold Shutdown was following a refueling). In addition, the operators should be able to monitor RCS temperature and RPV level so that escalation to the alert level via CA2.1 or CA3.1 will occur if required.

During refueling the level in the RPV will normally be maintained above the RPV flange. Refueling evolutions that decrease water level below the RPV flange are carefully planned and

procedurally controlled. Loss of forced decay heat removal at reduced inventory may result in more rapid increases in RCS temperatures depending on the time since shutdown.

Normal means of core temperature indication and RCS level indication may not be available in the refueling mode. Redundant means of RPV level indication are therefore procedurally installed to assure that the ability to monitor level will not be interrupted. However, if all level and temperature indication were to be lost in either the cold shutdown of refueling modes, this EAL would result in declaration of an Unusual Event if both temperature and level indication cannot be restored within 15 minutes from the loss of both means of indication. Escalation to Alert would be via CA2.1 based on an inventory loss or CA3.1 based on exceeding its temperature criteria.

IPEC Basis:

Several instruments are capable of providing indication of RCS temperature with respect to the Technical Specification cold shutdown temperature limit (200°F, ref. 1). These include cold and hot leg RTDs, RHR heat exchanger inlet temperature, reactor vessel metal temperatures and core exit thermocouples (ref. 2, 3). Heat up and Cool down rate limitations are provided in Technical Specifications (ref. 4, 5).

Unit 2

The Reactor Vessel flange mating surface is at 69' (ref. 6). RCS elevations are illustrated in Figure C-3 (ref. 6). RCS level can be monitored by one or more of the following (ref. 6):

- Barton level system
- Tygon level system
- Mansell Level Monitoring System (MLMS)
- Intermediate range RCS level indicator (LT-7610)
- CCR Foxboro (RCS DRAIN DOWN NARROW RANGE)
- RVLIS

Unit 3

The Reactor Vessel flange mating surface is at 69' (ref. 7). RCS level can be monitored by one or more of the following (ref. 7):

- 32 & 34 Intermediate Leg Level Indicators (ILLI)
- Hand Held Ultrasonic Transducers
- Mansell Level Monitoring System
- Intermediate range RCS level indicator (LT-7610)
- RVLIS

IPEC Basis Reference(s):

1. Technical Specifications Table 1.1-1
2. 2-POP-4.2 Operation Below 20% PRZR Level with Fuel in the Reactor
3. 3-POP-4.2 Operation Below 20% PRZR Level with Fuel in the Reactor
4. Technical Specifications 3.4.3
5. Technical Specifications 3.4.9.2
6. 2-POP-4.2 Operation Below 20% PRZR Level with Fuel in the Reactor
7. 3-POP-4.2 Operation Below 20% PRZR Level with Fuel in the Reactor

Attachment 1 – Emergency Action Level Bases

Figure C-3 – Unit 2 Component Elevations and Levels

COMPONENT	ELEVATION	PRZR LEVEL	RVLIS	Gallons Drained	
				S/G Tubes Empty	S/G Tubes Full
Top or RVLIS	84' 2"	27%	120%	37,900	10,150
20% PRZR Level	80' 10"	20%	112%	38,750	11,000
PLACE RX Head Vent In Service	75' 6"	10%	101%	40,000	12,250
Top or RX Head	75' 10"	9%	100%	40,200	12,450
PRZR Lower Tap	73' 7"	0%	86%	41,500	13,750
Bottom of PRZR	69' 7"	0%	85%	46,000	18,250
RX Vessel Flange	69'	0%	83%	46,700	18,950
RX Head Removal	**68'**	**0%**	**81%**	**47,800**	**20,050**
	67'	0%	--	49,100	21,300
Reduced Inventory	**66'**	0%	--	50,250	22,500
	65'	0%	--	51,400 (51,666)	23,650
	64'	0%	--	52,500 (53,500)	24,750
Top of Hot Leg	63' 6"	0%	70%	(54,750)	
	63' 0"	0%		(56,375)	
Normal Draindown Level	62' 6"	0%		(59,000)	
Middle of Hot Leg	62' 0"	0%		(62,250)	
Min. Level with RHR	**61' 8"**	**0%**		**(64,500)**	

Category: C – Cold Shutdown / Refueling System Malfunction

Subcategory: 3 – RCS Temperature

Initiating Condition: Inability to maintain plant in cold shutdown

EAL:

CA3.1 Alert

Any unplanned event resulting in RCS temperature > 200°F for > Table C-3 duration

OR

RCS pressure increase > 10 psig due to a loss of RCS cooling
(not applicable to solid plant operations)

Note 3: The Emergency Director should not wait until the applicable time has elapsed, but should declare the event as soon as it is determined that the condition will likely exceed the applicable time.

Table C-3 – RCS Reheat Duration Thresholds

RCS	Containment Closure	Duration
Intact and **not** Reduced Inventory	N/A	60 minutes*
Not Intact **OR** Reduced Inventory	Established	20 minutes*
	Not Established	0 minutes

* If an RCS heat removal system is in operation within this time frame and RCS temperature is being reduced, this EAL is **not** applicable.

Mode Applicability:

5 - Cold Shutdown, 6 - Refueling

NEI 99-01 Basis:

The first condition of this EAL addresses events in which RCS temperature exceeds the CU3.1 EAL threshold of 200 °F (ref. 1) for the durations identified in Table C-3.

Table C-3 duration #3 addresses complete loss of functions required for core cooling during Refuel and Cold Shutdown modes when neither containment closure nor RCS integrity are established. RCS integrity is in place when the RCS pressure boundary is in its normal condition for the Cold Shutdown mode of operation. No delay time is allowed for duration #3 because the evaporated reactor coolant that may be released into the containment during this heat up condition could also be directly released to the environment.

Table C-3 duration #2 addresses the complete loss of functions required for core cooling for > 20 minutes during Refuel and Cold Shutdown modes when containment closure is established but RCS integrity is not established. RCS integrity should be assumed to be in place when the RCS pressure boundary is in its normal condition for the Cold Shutdown mode of operation. The allowed 20 minute time frame was included to allow operator action to restore the heat removal function, if possible. The allowed time frame is consistent with the guidance provided by Generic Letter 88-17, "Loss of Decay Heat Removal" and is believed to be conservative given that a low pressure containment barrier to fission product release is established. The table note indicates that this duration is not applicable if actions are successful in restoring an RCS heat removal system to operation and RCS temperature is being reduced within the 20 minute time frame.

Table C-3 duration #1 addresses complete loss of functions required for core cooling for greater than 60 minutes during Refuel and Cold Shutdown modes when RCS integrity is established. As in duration #2 and #3, RCS integrity should be considered to be in place when the RCS pressure boundary is in its normal condition for the cold shutdown mode of operation. The status of containment closure in this EAL is immaterial given that the RCS is providing a high pressure barrier to fission product release to the environment. The 60 minute time frame

should allow sufficient time to restore cooling without there being a substantial degradation in plant safety.

The 10 psig pressure increase covers situations where, due to high decay heat loads, the time provided to restore temperature control, should be less than 60 minutes. The table note indicates that duration #1 is not applicable if actions are successful in restoring an RCS heat removal system to operation and RCS temperature is being reduced within the 60 minute time frame assuming that the RCS pressure increase has remained less than 10 psig.

Escalation to Site Area would be via CS1.1 should boiling result in significant RPV level loss leading to core uncovery.

This EAL is based on concerns raised by Generic Letter 88-17, "Loss of Decay Heat Removal." A number of phenomena such as pressurization, vortexing, steam generator U-tube draining, RCS level differences when operating at a mid-loop condition, decay heat removal system design, and level instrumentation problems can lead to conditions where decay heat removal is lost and core uncovery can occur. NRC analyses show that sequences that can cause core uncovery in 15 to 20 minutes and severe core damage within an hour after decay heat removal is lost.

A loss of Technical Specification components alone is not intended to constitute an Alert. The same is true of a momentary unplanned excursion above 200 degrees F when the heat removal function is available.

The Emergency Director must remain alert to events or conditions that lead to the conclusion that exceeding the EAL threshold is imminent. If, in the judgment of the Emergency Director, an imminent situation is at hand, the classification should be made as if the threshold has been exceeded.

IPEC Basis:

Several instruments are capable of providing indication of RCS temperature with respect to the Technical Specification cold shutdown temperature limit (200°F, ref. 1). These include cold and

hot leg RTDs, RHR heat exchanger inlet temperature, reactor vessel metal temperatures and core exit thermocouples (ref. 2, 3). Heat up and Cool down rate limitations are provided in Technical Specifications (ref. 4, 5).

The 10 psig pressure increase can be detected on:

- Unit 2 – MLMS or PI-413K on panel SFF with computer input to the plant computer (ref. 2)
- Unit 3 – MLMS, PT-410 and PT-411 on RVLIS, or PI-413K (ref. 3)

IPEC Basis Reference(s):

1. Technical Specifications Table 1.1-1
2. 2-POP-4.2 Operation Below 20% PRZR Level with Fuel in the Reactor
3. 3-POP-4.2 Operation Below 20% PRZR Level with Fuel in the Reactor
4. Technical Specifications 3.4.3
5. Technical Specifications 3.4.9.2

Attachment 1 – Emergency Action Level Bases

Category: C – Cold Shutdown / Refueling System Malfunction

Subcategory: 4 – Communications

Initiating Condition: Loss of **all** onsite or offsite communications capabilities

EAL:

CU4.1 Unusual Event

Loss of **all** Table C-2 onsite (internal) communications capability affecting the ability to perform routine operations

OR

Loss of **all** Table C-2 offsite (external) communications capability affecting the ability to perform offsite notifications

Table C-2 Communications Systems

System	Onsite (internal)	Offsite (external)
Plant Telephone System	X	X
Plant Radio System	X	
Page/Party System	X	
Emergency Notification System (ENS)		X

Mode Applicability:

5 - Cold Shutdown, 6 – Refueling, D - Defueled

NEI 99-01 Basis:

The purpose of this EAL is to recognize a loss of communications capability that either defeats the plant operations staff ability to perform routine tasks necessary for plant operations or the ability to communicate problems with offsite authorities. The loss of offsite communications ability is expected to be significantly more comprehensive than the condition addressed by 10 CFR 50.72.

The availability of one method of ordinary offsite communications is sufficient to inform state and local authorities of plant problems. This EAL is intended to be used only when extraordinary means (e.g., relaying of information from radio transmissions, individuals being sent to offsite locations, etc.) are being utilized to make communications possible.

The Table C-2 list for onsite communications loss encompasses the loss of all means of routine communications (e.g., commercial telephones, sound powered phone systems, page party system and radios / walkie-talkies).

The Table C-2 list for offsite communications loss encompasses the loss of all means of communications with offsite authorities. This includes the ENS, commercial telephone lines, telecopy transmissions, and dedicated phone systems.

IPEC Basis:

Unit 2

Routine Unit 2 plant communications are conducted via telephone, radio, and Public Address (paging) systems.

The plant telephone and radio communications systems include two (2) PBX electronic switches, backup phone lines and a UHF radio system. A third PBX electronic switch is located at the EOF.

The public address system for Indian Point Unit 2 consists of "Page" and "Party" communications, which are common to both the primary (nuclear) and secondary (conventional) portions of Units 1 and 2. The "Page" and "Party" communications are also monitored at a speaker panel located in the CCR.

An in-house radio system provides communications between the Technical Support Center, the I&C office, and in-plant personnel.

Unit 3

The Unit 3 communications system was designed to ensure the reliable, timely flow of information and action directives necessary during normal operation, and particularly for the mitigation of emergencies.

The Public Address (PA) System has two subsystems: the Plant Party Paging and the Site PA System. The system consists of three channels. Two of these channels are common to both the primary (nuclear) and secondary (conventional) portions of the plant. The third line provides an additional channel in the primary portion of the Unit 3 plant. A "Page" handset is used for page purposes only and calls originating from this handset can be heard on all loudspeakers in the primary and secondary portions of the facility. The remaining two "Page-Party" handsets are used for loudspeakers paging and party-line conversations, as selected by the control room operator.

This EAL is the cold condition equivalent of the hot condition EAL SU4.2.

IPEC Basis Reference(s):

1. Unit 2 FSAR Section 7.7.4 Communications
2. Unit 3 FSAR Section 9.6.5 Plant Communications Systems

Category: C – Cold Shutdown / Refueling System Malfunction

Subcategory: 5 – Inadvertent Criticality

Initiating Condition: Inadvertent criticality

EAL:

CU5.1	**Unusual Event**
Unplanned sustained positive startup rate observed on nuclear instrumentation	

Mode Applicability:

5 - Cold Shutdown, 6 - Refueling

NEI 99-01 Basis:

This EAL addresses criticality events that occur in Cold Shutdown or Refueling modes [(NUREG 1449, Shutdown and Low-Power Operation at Commercial Nuclear Power Plants in the United States)] such as fuel miss-loading events and inadvertent dilution events. This EAL indicates a potential degradation of the level of safety of the plant, warranting an Unusual Event classification.

This condition can be identified using startup rate monitors. The term "sustained" is used in order to allow exclusion of expected short term positive startup rates from planned fuel bundle or control rod movements during core alterations. These short term positive startup rates are the result of the increase in neutron population due to subcritical multiplication.

Escalation would be by Emergency Director Judgment.

IPEC Basis:

The startup rate for each channel is indicated at the main control board in terms of decades per minute over the range of -0.5 to +5.0 decades/min.

IPEC Basis Reference(s):

1. Unit 2 FSAR Section 7.4 Nuclear Instrumentation
2. Unit 3 FSAR Section 7.4 Excore Nuclear Instrumentation

Category: C – Cold Shutdown / Refueling System Malfunction

Subcategory: 6 – Loss of DC Power

Initiating Condition: Loss of required DC power for 15 minutes or longer

EAL:

CU6.1	**Unusual Event**
< 105 VDC bus voltage indications on **all** Technical Specification required 125 VDC buses for ≥ 15 min. (Note 3)	

Note 3: The Emergency Director should not wait until the applicable time has elapsed, but should declare the event as soon as it is determined that the condition will likely exceed the applicable time.

Mode Applicability:

5 - Cold Shutdown, 6 - Refuel

NEI 99-01 Basis:

The purpose of this EAL is to recognize a loss of DC power compromising the ability to monitor and control the removal of decay heat during Cold Shutdown or Refueling operations.

This EAL is intended to be anticipatory in as much as the operating crew may not have necessary indication and control of equipment needed to respond to the loss.

Plants will routinely perform maintenance on a train related basis during shutdown periods The required busses are the minimum allowed by Technical Specifications for the mode of operation. It is intended that the loss of the operating (operable) train is to be considered. If this loss results in the inability to maintain Cold Shutdown, the escalation to an Alert will be per CA3.1.

Fifteen minutes was selected as a threshold to exclude transient or momentary power losses.

IPEC Basis:

For Indian Point Unit 2, each 480V bus has an automatic transfer switch to provide alternate DC power supplies to the 480V buses. This DC power is also supplied to 480V motor control centers. With two Residual heat removal (RHR) pumps and two RHR heat exchangers available, only one DC bus is required to provide control to a single train of RHR cooling during shutdown and refueling. With one RHR pump or one RHR heat exchanger isolated for repair, a condition could exist where a loss of a single DC power supply could result in a loss of ability to control decay heat removal. Redundant and alternate indications needed to monitor decay heat removal are powered from different DC sources such that only a loss of all DC power would result in the inability to monitor core cooling status.

The bus voltage is based on the minimum bus voltage necessary for the operation of safety related equipment. This voltage value incorporates a margin of at least 15 minutes of operation before the onset of inability to operate loads.

This EAL is the cold condition equivalent of the hot condition loss of DC power EAL SS7.1.

IPEC Basis Reference(s):

1. 2-AOP-DC-1 Loss Of A Battery Charger Or Any 125V DC Panel
2. 2-PT-R076A Station Battery 21 Load Test
3. 2-PT-R076C Station Battery 23 Load Test
4. 3-AOP-DC-1 Loss Of A 125V DC Panel
5. SOP-EL-003, Battery Charger and 125 Volt DC System Operations
6. 3PT-R156A Station Battery 31 Load Profile Service Test

Category H – Hazards

EAL Group: ANY (EALs in this category are applicable to any plant condition, hot or cold.)

Hazards are non-plant, system-related events that can directly or indirectly affect plant operation, reactor plant safety or personnel safety.

The events of this category pertain to the following subcategories:

1. Natural & Destructive Phenomena

Natural events include hurricanes, earthquakes or tornados that have potential to cause plant structure or equipment damage of sufficient magnitude to threaten personnel or plant safety. Non-naturally occurring events that can cause damage to plant facilities and include aircraft crashes, missile impacts, etc.

2. Fire or Explosion

Fires can pose significant hazards to personnel and reactor safety. Appropriate for classification are fires within the site Protected Area or which may affect operability of vital equipment.

3. Hazardous Gas

Non-naturally occurring events that can cause damage to plant facilities and include toxic, corrosive, asphyxiant or flammable gas leaks.

4. Security

Unauthorized entry attempts into the Protected Area, bomb threats, sabotage attempts, and actual security compromises threatening loss of physical control of the plant.

5. Control Room Evacuation

Events that are indicative of loss of Control Room habitability. If the Control Room must be evacuated, additional support for monitoring and controlling plant functions is necessary through the emergency response facilities.

6. Judgment

The EALs defined in other categories specify the predetermined symptoms or events that are indicative of emergency or potential emergency conditions and thus warrant classification. While these EALs have been developed to address the full spectrum of possible emergency conditions which may warrant classification and subsequent implementation of the Emergency Plan, a provision for classification of emergencies based on operator/management experience and judgment is still necessary. The EALs of this category provide the Emergency Director the latitude to classify emergency conditions consistent with the established classification criteria based upon Emergency Director judgment.

Attachment 1 – Emergency Action Level Bases

Category: H – Hazards

Subcategory: 1 – Natural & Destructive Phenomena

Initiating Condition: Natural or destructive phenomena affecting the Protected Area

EAL:

Initiating Condition: Natural or destructive phenomena affecting the Protected Area

EAL:

HU1.1 Unusual Event

Seismic event identified by **any two** of the following:

- Earthquake felt in plant by a consensus of Control Room Operators
- Unit 3 "Seismic Event Occurred" alarm (Panel SDF) or **any** amber Peak Shock Annunciator light is lit
- National Earthquake Information Center (Note 4)

Note 4: The NEIC can be contacted by calling **(303) 273-8500** to confirm recent seismic activity in the vicinity of IPEC. Provide the analyst with the following IPEC coordinates: **41° 15' 55" north latitude, 73° 57' 08" west longitude**. Alternatively go to the USGS NEIC website: http://earthquake.usgs.gov.

Mode Applicability:

All

NEI 99-01 Basis:

This EAL is categorized on the basis of the occurrence of an event of sufficient magnitude to be of concern to plant operators.

Damage may be caused to some portions of the site, but should not affect ability of safety functions to operate.

As defined in the EPRI-sponsored Guidelines for Nuclear Plant Response to an Earthquake, dated October 1989, a "felt earthquake" is: An earthquake of sufficient intensity such that: (a) the vibratory ground motion is felt at the nuclear plant site and recognized as an earthquake based on a consensus of control room operators on duty at the time, and (b) for plants with operable seismic instrumentation, the seismic switches of the plant are activated.

The seismic switches are set at an acceleration of about 0.01g. The method of detection is based on instrumentation, validated by a reliable source, or operator assessment.

The National Earthquake Information Center can confirm if an earthquake has occurred in the area of the plant.

IPEC Basis:

The method of detection with respect to emergency classification relies on the agreement of the shift operator's on-duty in the Control Room that the suspected ground motion is a "felt earthquake" as well as the actuation of the IPEC seismic instrumentation. Consensus of the Control Room operators with respect to ground motion helps avoid unnecessary classification if the seismic switches inadvertently trip or detect vibrations not related to an earthquake.

The National Earthquake Information Center can confirm if an earthquake has occurred in the area of the plant. The NEIC can be contacted by calling **(303) 273-8500** to confirm recent seismic activity in the vicinity of IPEC. Provide the analyst with the following IPEC coordinates: **41° 15' 55" north latitude, 73° 57' 08" west longitude** (ref 3).

Alternatively go to the USGS NEIC website:

http://earthquake.usgs.gov/

The Strong Motion Accelerograph is located on the Unit 3 46' Elev., base mat; 100' Elev., Containment Structure Wall directly above the 46' Elev.

This event escalates to an Alert under EAL HA1.1 if the earthquake exceeds Operating Basis Earthquake (OBE) levels.

IPEC Basis Reference(s):

1. Unit 2 FSAR Section 5.1.2.2 Design Load Criteria
2. Unit 3 FSAR Section 16.1.3 General Seismic Design Criteria and Damping Values
3. Unit 2 FSAR Appendix 2A Meteorological Update Section 4.1.1 General
4. SOP-S-1 Seismic Monitoring Equipment
5. 0-AOP-SEISMIC-1 Seismic Event

Category: H – Hazards

Subcategory: 1 – Natural & Destructive Phenomena

Initiating Condition: Natural or destructive phenomena affecting the Protected Area

EAL:

HU1.2 Unusual Event

Tornado striking within Protected Area boundary

OR

Sustained high winds > 90 mph (40 m/sec)

Mode Applicability:

All

NEI 99-01 Basis:

This EAL is categorized on the basis of the occurrence of an event of sufficient magnitude to be of concern to plant operators.

This EAL is based on a tornado striking (touching down) or high winds within the Protected Area.

Escalation of this emergency classification level, if appropriate, would be based on visible damage, or by other in plant conditions, via HA1.2.

IPEC Basis:

A tornado striking (touching down) within the Protected Area warrants declaration of an Unusual Event regardless of the measured wind speed at the meteorological tower. A tornado is defined as a violently rotating column of air in contact with the ground and extending from the base of a thunderstorm.

Sustained 90 mph is the Unit 3 design wind speed (ref. 1). As used in this EAL the term "sustained high winds" is meant to exclude brief gusts above the specified wind speed of 90 mph.

IPEC Basis Reference(s):

1. Unit 3 FSAR Section 1.3 General Design Criteria

Category: H – Hazards

Subcategory: 1 – Natural & Destructive Phenomena

Initiating Condition: Natural or destructive phenomena affecting the Protected Area

EAL:

HU1.3 Unusual Event

Turbine failure resulting in **EITHER**:

Casing penetration
OR
Damage to turbine or generator seals

Mode Applicability:

All

NEI 99-01 Basis:

This EAL is categorized on the basis of the occurrence of an event of sufficient magnitude to be of concern to plant operators.

This EAL addresses main turbine rotating component failures of sufficient magnitude to cause observable damage to the turbine casing or to the seals of the turbine generator. Generator seal damage observed after generator purge does not meet the intent of this EAL because it did not impact normal operation of the plant.

Of major concern is the potential for leakage of combustible fluids (lubricating oils) and gases (hydrogen cooling) to the plant environs. Actual fires and flammable gas build up are appropriately classified via HU2.1 and HU3.1.

This EAL is consistent with the definition of a Unusual Event while maintaining the anticipatory nature desired and recognizing the risk to non-safety related equipment.

Escalation of this emergency classification level, if appropriate, would be to HA1.3 based on damage done by projectiles generated by the failure..

IPEC Basis:

The turbine generator stores large amounts of rotational kinetic energy in its rotor. In the unlikely event of a major mechanical failure, this energy may be transformed into both rotational and translational energy of rotor fragments. These fragments may impact the surrounding stationary parts. If the energy-absorbing capability of these stationary turbine generator parts is insufficient, external missiles will be released. These ejected missiles may impact various plant structures, including those housing safety related equipment.

In the event of missile ejection, the probability of a strike on a plant region is a function of the energy and direction of an ejected missile and of the orientation of the turbine with respect to the plant region.

IPEC Basis Reference(s):

None

Category: H – Hazards

Subcategory: 1 – Natural & Destructive Phenomena

Initiating Condition: Natural or destructive phenomena affecting the Protected Area

EAL:

HU1.4 Unusual Event

Flooding in **any** Table H-1 area that has the potential to affect safety-related equipment needed for the current operating mode

Table H-1 Safe Shutdown Areas

- Control Buildings and associated Electrical Tunnels and Battery Rooms
- Service Water Pump Structure and Valve Pits
- Fuel Storage Building
- Primary Auxiliary Building/Fan House
- Vapor Containment Building
- EDG Buildings
- Auxiliary Feed-pump Building
- Condensate Storage Tank
- Refueling Water Storage Tank

Mode Applicability:

All

NEI 99-01 Basis:

This EAL is categorized on the basis of the occurrence of an event of sufficient magnitude to be of concern to plant operators.

This EAL addresses the effect of internal flooding caused by events such as component failures, equipment misalignment, or outage activity mishaps.

The Table H-1 Safe Shutdown Areas include those areas that contain systems required for safe shutdown of the plant, which are not designed to be partially or fully submerged (ref. 1, 2).

Escalation of this emergency classification level, if appropriate, would be based visible damage via HA1.5, or by other plant conditions.

IPEC Basis:

The areas of concern are list in Table H-1 Safe Shutdown Areas. The listed areas consist of the designated Class I structures, systems and components. Class I structures, systems and components are those necessary to assure the capability to shut down the reactor and maintain it in the shutdown condition.

Flooding in these areas could have the potential to cause a reactor trip and could result in consequential failures to important systems.

IPEC Basis Reference(s):

1. Unit 2 FSAR Section 1.11.2 Classification of Particular Structures and Equipment
2. Unit 3 FSAR Section 16.1.2 Classification of Particular Structures and Equipment

Category: H – Hazards

Subcategory: 1 – Natural & Destructive Phenomena

Initiating Condition: Natural or destructive phenomena affecting the Protected Area

EAL:

HU1.5 Unusual Event

River Water Level > 14 ft. 6 in. (ØMSL)

OR

Service Water Bay (Intake Structure) water level < - 4 ft. 5 in. (ØMSL)

Mode Applicability:

All

NEI 99-01 Basis:

This EAL is categorized on the basis of the occurrence of an event of sufficient magnitude to be of concern to plant operators.

This EAL addresses external flooding and low intake (river) water levels that can also be precursors of more serious events.

IPEC Basis:

Unusual Events in this subcategory are categorized on the basis of the occurrence of an event of sufficient magnitude to be of concern to plant operators. Escalation of the event to an Alert occurs when the magnitude of the event is sufficient to result in damage to equipment contained in the specified location.

This EAL covers high river water level conditions that could be a precursor of more serious events as well as low river (intake) water level conditions which may threaten operability of plant cooling systems.

River water level ≥ 14 ft. 6 in. above zero mean sea level (ØMSL) corresponds to the maximum anticipated river run-up level (ref. 1).

Service water bay (intake structure) level < 4.5 ft. below zero mean sea level (ØMSL) corresponds to the minimum level to support design service water flow rate. (ref. 2).

Unit 2

A level indicator is mounted on the railing in the Service Water Pit. There are hose clamps at 6 inch intervals starting 6 inches below the platform. The platform is at 6 foot elevation, and the first bracket is at negative 2 foot elevation. There are fifteen hose clamps between the platform and the first bracket. The indicator continues down to the negative 4 foot 6 inch elevation. Other indicators of high river water level are use of tape/rope measurement or outfall level reading (ref. 3).

Unit 3

To calculate river level, place measuring device (at least 8' long) through an open floor slot on the river side of the traveling water screens at the intake structure. Measure the distance between the 15 ft. elevation and current river height. Subtract the measurement I from 15 ft. to determine river level (ref. 4).

IPEC Basis Reference(s):

1. Unit 2 FSAR Section 2.5, "Hydrology"
2. Unit 3 FSAR Section 9.6.1, "Service Water System"
3. 2-AOP-FLOOD, "Flooding"
4. 3-AOP-FLOOD, "Flooding"

Category: H – Hazards

Subcategory: 1 - Natural & Destructive Phenomena

Initiating Condition: Natural or destructive phenomena affecting Vital Areas

EAL:

HA1.1 Alert

Two or more annunciators are lit on the Peak Shock Annunciator panel, one of which is red

AND

Strong Motion Event Indicator is lit

AND

Earthquake confirmed by **any** of the following:

- Earthquake felt in plant by a consensus of Control Room Operators
- National Earthquake Information Center (Note 4)
- Control Room indication of degraded performance of systems required for the safe shutdown of the plant

Note 4: The NEIC can be contacted by calling **(303) 273-8500** to confirm recent seismic activity in the vicinity of IPEC. Provide the analyst with the following IPEC coordinates: **41° 15' 55" north latitude, 73° 57' 08" west longitude**. Alternatively go to the USGS NEIC website: **http://earthquake.usgs.gov**.

Mode Applicability:

All

NEI 99-01 Basis:

This EAL escalates from HU1.1 in that the occurrence of the event has resulted in visible damage to plant structures or areas containing equipment necessary for a safe shutdown, or has caused damage to the safety systems in those structures evidenced by control indications of degraded system response or performance. The occurrence of visible damage and/or degraded system response is intended to discriminate against lesser events. The initial "report" should not be interpreted as mandating a lengthy damage assessment prior to classification. No attempt is made in this EAL to assess the actual magnitude of the damage.

The significance here is not that a particular system or structure was damaged, but rather, that the event was of sufficient magnitude to cause this degradation.

Escalation of this emergency classification level, if appropriate, would be based on System Malfunction EALs.

Seismic events of this magnitude can result in a vital area being subjected to forces beyond design limits, and thus damage may be assumed to have occurred to plant safety systems.

The National Earthquake Information Center can confirm if an earthquake has occurred in the area of the plant.

IPEC Basis:

Ground motion acceleration of 0.1 g horizontal or 0.05 g vertical is the Operating Basis Earthquake for IPEC (ref. 1, 2).

The seismic monitoring and recording equipment is normally maintained in a standby condition.

The National Earthquake Information Center can confirm if an earthquake has occurred in the area of the plant. The NEIC can be contacted by calling **(303) 273-8500** to confirm recent seismic activity in the vicinity of IPEC. Provide the analyst with the following IPEC coordinates: **41° 15' 55" north latitude, 73° 57' 08" west longitude** (ref. 3).

Alternatively go to the USGS NEIC website:

http://earthquake.usgs.gov

The Strong Motion Accelerograph is located on the Unit 3 46' Elev., base mat; 100' Elev., Containment Structure Wall directly above the 46' Elev.

IPEC Basis Reference(s):

1. Unit 2 FSAR Section 5.1.2.2 Design Load Criteria
2. Unit 3 FSAR Section 16.1.3 General Seismic Design Criteria and Damping Values
3. Unit 2 FSAR Appendix 2A Meteorological Update Section 4.1.1 General

Category: H – Hazards

Subcategory: 1 - Natural & Destructive Phenomena

Initiating Condition: Natural or destructive phenomena affecting Vital Areas

EAL:

HA1.2 Alert

Tornado striking or sustained high winds > 90 mph (40 m/sec) resulting in **EITHER**:

Visible damage to **any** Table H-1 plant structures containing safety systems or components

OR

Control Room indication of degraded performance of safety systems

Table H-1 Safe Shutdown Areas
• Control Buildings and associated Electrical Tunnels and Battery Rooms • Service Water Pump Structure and Valve Pits • Fuel Storage Building • Primary Auxiliary Building/Fan House • Vapor Containment Building • EDG Buildings • Auxiliary Feed-pump Building • Condensate Storage Tank • Refueling Water Storage Tank

Mode Applicability:

All

NEI 99-01 Basis:

This EAL escalates from HU1.2 in that the occurrence of the event has resulted in visible damage to plant structures or areas containing equipment necessary for a safe shutdown, or has caused damage to the safety systems in those structures evidenced by control indications of degraded system response or performance. The occurrence of visible damage and/or degraded system response is intended to discriminate against lesser events. The initial

"report" should not be interpreted as mandating a lengthy damage assessment prior to classification. No attempt is made in this EAL to assess the actual magnitude of the damage. The significance here is not that a particular system or structure was damaged, but rather, that the event was of sufficient magnitude to cause this degradation.

Escalation of this emergency classification level, if appropriate, would be based on System Malfunction EALs.

This EAL is based on a tornado striking (touching down) or high winds that have caused visible damage to structures containing functions or systems required for safe shutdown of the plant.

IPEC Basis:

This threshold addresses events that may have resulted in Safe Shutdown Areas being subjected to forces (tornado or sustained high winds > 90 mph, ref. 1) beyond design limits and thus damage may be assumed to have occurred to plant safety systems. Table H-1 Safe Shutdown Areas house equipment the operation of which may be needed to ensure the reactor safely reaches and is maintained shutdown (ref. 2, 3). As used in this EAL the term "sustained high winds" is meant to exclude brief gusts above the specified wind speed of 90 mph.

A tornado striking (touching down) within the Protected Area resulting in visible damage warrants declaration of an Alert regardless of the measured wind speed at the meteorological tower. A tornado is defined as a violently rotating column of air in contact with the ground and extending from the base of a thunderstorm.

IPEC Basis Reference(s):

1. Unit 3 FSAR Section 1.3 General Design Criteria
2. Unit 2 FSAR Section 1.11.2 Classification of Particular Structures and Equipment
3. Unit 3 FSAR Section 16.1.2 Classification of Particular Structures and Equipment

Category: H – Hazards

Subcategory: 1 – Natural & Destructive Phenomena

Initiating Condition: Natural or destructive phenomena affecting Vital Areas

EAL:

HA1.3 Alert

Vehicle crash resulting in visible damage to **EITHER**:

Any Table H-1 plant structures containing safety systems or components

OR

Control Room indication of degraded performance of safety systems

Table H-1 Safe Shutdown Areas
• Control Buildings and associated Electrical Tunnels and Battery Rooms • Service Water Pump Structure and Valve Pits • Fuel Storage Building • Primary Auxiliary Building/Fan House • Vapor Containment Building • EDG Buildings • Auxiliary Feed-pump Building • Condensate Storage Tank • Refueling Water Storage Tank

Mode Applicability:

All

NEI 99-01 Basis:

The occurrence of visible damage and/or degraded system response is intended to discriminate against lesser events. The initial report should not be interpreted as mandating a lengthy damage assessment prior to classification. No attempt is made in this EAL to assess the actual magnitude of the damage. The significance here is not that a particular system or structure was damaged, but rather, that the event was of sufficient magnitude to cause this degradation.

Escalation of this emergency classification level, if appropriate, would be based on System Malfunction EALs.

This EAL addresses vehicle crashes within the Protected Area that results in visible damage to vital areas or indication of damage to safety structures, systems, or components containing functions and systems required for safe shutdown of the plant.

IPEC Basis:

Table H-1 Safe Shutdown Areas house equipment the operation of which may be needed to ensure the reactor reaches and is maintained in shutdown (ref. 1, 2).

If the vehicle crash is determined to be hostile in nature, the event is classified under security based EALs.

IPEC Basis Reference(s):

1. Unit 2 FSAR Section 1.11.2 Classification of Particular Structures and Equipment
2. Unit 3 FSAR Section 16.1.2 Classification of Particular Structures and Equipment

Category: H – Hazards

Subcategory: 1 – Natural & Destructive Phenomena

Initiating Condition: Natural or destructive phenomena affecting Vital Areas

EAL:

HA1.4 Alert

Turbine failure-generated projectiles resulting in **EITHER**:

Visible damage to or penetration of **any** Table H-1 area containing safety systems or components

OR

Control room indication of degraded performance of safety systems

Table H-1 Safe Shutdown Areas
• Control Buildings and associated Electrical Tunnels and Battery Rooms • Service Water Pump Structure and Valve Pits • Fuel Storage Building • Primary Auxiliary Building/Fan House • Vapor Containment Building • EDG Buildings • Auxiliary Feed-pump Building • Condensate Storage Tank • Refueling Water Storage Tank

Mode Applicability:

All

NEI 99-01 Basis:

This EAL escalates from HU1.3 in that the occurrence of the event has resulted in visible damage to plant structures or areas containing equipment necessary for a safe shutdown, or has caused damage to the safety systems in those structures evidenced by control indications of degraded system response or performance. The occurrence of visible damage and/or degraded system response is intended to discriminate against lesser events. The initial

"report" should not be interpreted as mandating a lengthy damage assessment prior to classification. No attempt is made in this EAL to assess the actual magnitude of the damage. The significance here is not that a particular system or structure was damaged, but rather, that the event was of sufficient magnitude to cause this degradation.

Escalation of this emergency classification level, if appropriate, would be based on System Malfunction EALs.

This EAL addresses the threat to safety related equipment imposed by projectiles generated by main turbine rotating component failures. Therefore, this EAL is consistent with the definition of an Alert in that the potential exists for actual or substantial potential degradation of the level of safety of the plant.

IPEC Basis:

The turbine generator stores large amounts of rotational kinetic energy in its rotor. In the unlikely event of a major mechanical failure, this energy may be transformed into both rotational and translational energy of rotor fragments. These fragments may impact the surrounding stationary parts. If the energy-absorbing capability of these stationary turbine generator parts is insufficient, external missiles will be released. These ejected missiles may impact various plant structures, including those housing safety related equipment.

In the event of missile ejection, the probability of a strike on a plant region is a function of the energy and direction of an ejected missile and of the orientation of the turbine with respect to the plant region.

The list of Table H-1 areas includes all areas containing safety-related equipment, their controls, and their power supplies (ref. 1, 2).

IPEC Basis Reference(s):

1. Unit 2 FSAR Section 1.11.2 Classification of Particular Structures and Equipment
2. Unit 3 FSAR Section 16.1.2 Classification of Particular Structures and Equipment

Category: H – Hazards

Subcategory: 1 – Natural & Destructive Phenomena

Initiating Condition: Natural or destructive phenomena affecting Vital Areas

EAL:

HA1.5 Alert

Flooding in **any** Table H-1 area resulting in **EITHER**:

An electrical shock hazard that precludes necessary access to operate or monitor safety equipment

OR

Control room indication of degraded performance of required safety systems

Table H-1 Safe Shutdown Areas
• Control Buildings and associated Electrical Tunnels and Battery Rooms • Service Water Pump Structure and Valve Pits • Fuel Storage Building • Primary Auxiliary Building/Fan House • Vapor Containment Building • EDG Buildings • Auxiliary Feed-pump Building • Condensate Storage Tank • Refueling Water Storage Tank

Mode Applicability:

All

NEI 99-01 Basis:

This EAL escalates from HU1.4 in that the occurrence of the event has resulted in visible damage to plant structures or areas containing equipment necessary for a safe shutdown, or has caused damage to the safety systems in those structures evidenced by control indications of degraded system response or performance. The occurrence of visible damage and/or

degraded system response is intended to discriminate against lesser events. The initial "report" should not be interpreted as mandating a lengthy damage assessment prior to classification. No attempt is made in this EAL to assess the actual magnitude of the damage. The significance here is not that a particular system or structure was damaged, but rather, that the event was of sufficient magnitude to cause this degradation.

Escalation of this emergency classification level, if appropriate, would be based on System Malfunction EALs.

This EAL addresses the effect of internal flooding caused by events such as component failures, equipment misalignment, or outage activity mishaps. It is based on the degraded performance of systems, or has created industrial safety hazards (e.g., electrical shock) that preclude necessary access to operate or monitor safety equipment. The inability to access, operate or monitor safety equipment represents an actual or substantial potential degradation of the level of safety of the plant.

Flooding as used in this EAL describes a condition where water is entering the room faster than installed equipment is capable of removal, resulting in a rise of water level within the room. Classification of this EAL should not be delayed while corrective actions are being taken to isolate the water source.

IPEC Basis:

Flooding in Table H-1 Safe Shutdown Areas could have the potential to cause a reactor trip and could result in consequential failures to important systems (ref. 1, 2).

IPEC Basis Reference(s):

1. Unit 2 FSAR Section 1.11.2 Classification of Particular Structures and Equipment
2. Unit 3 FSAR Section 16.1.2 Classification of Particular Structures and Equipment

Category: H – Hazards

Subcategory: 1 – Natural & Destructive Phenomena

Initiating Condition: Natural or destructive phenomena affecting Vital Areas

EAL:

HA1.6 Alert

River Water Level > 15 ft. (ØMSL)

OR

Low Service Water Bay (Intake Structure) level resulting in a loss of service water flow

Mode Applicability:

All

NEI 99-01 Basis:

This EAL escalates from HU1.4 in that the occurrence of the event has resulted in visible damage to plant structures or areas containing equipment necessary for a safe shutdown, or has caused damage to the safety systems in those structures evidenced by control indications of degraded system response or performance. The occurrence of visible damage and/or degraded system response is intended to discriminate against lesser events. The initial "report" should not be interpreted as mandating a lengthy damage assessment prior to classification. No attempt is made in this EAL to assess the actual magnitude of the damage. The significance here is not that a particular system or structure was damaged, but rather, that the event was of sufficient magnitude to cause this degradation.

Escalation of this emergency classification level, if appropriate, would be based on System Malfunction EALs.

This EAL addresses other site specific phenomena that result in visible damage to vital areas or results in indication of damage to safety structures, systems, or components containing functions and systems required for safe shutdown of the plant (such as hurricane, flood, or seiche) that can also be precursors of more serious events.

IPEC Basis:

HA1.6 covers high river water level conditions that could pose a significant threat to plant safety as well as low river (intake) water level conditions which may threaten operability of vital emergency plant cooling systems.

A river water level of 15.25 ft. (rounded to 15 ft.). is considered the critical elevation beyond which water would begin to enter plant buildings.

Low intake levels could be caused either by Intake Structure and/or Traveling Screen blockage due to debris or ice or due to a loss of level in the Hudson River. This represents a significant challenge to plant safety.

Unit 2

A level indicator is mounted on the railing in the Service Water Pit. There are hose clamps at 6 inch intervals starting 6 inches below the platform. The platform is at 6 foot elevation, and the first bracket is at negative 2 foot elevation. There are fifteen hose clamps between the platform and the first bracket. The indicator continues down to the negative 4 foot 6 inch elevation. Other indicators of high river water level are use of tape/rope measurement or outfall level reading (ref. 3).

Unit 3

To calculate river level, place measuring device (at least 8' long) through an open floor slot on the river side of the traveling water screens at the intake structure. Measure the distance between the 15 ft. elevation and current river height. Subtract the measurement "L" from 15 ft. to determine river level (ref. 4).

The Unit 3 Service Water Pump suctions are at 10 ft. 11 3/8 in. below ØMSL (ref. 2).

IPEC Basis Reference(s):

1. Unit 2 FSAR Section 2.5, "Hydrology"
2. Unit 3 FSAR Section 9.6.1, "Service Water System"
3. 2-AOP-FLOOD, "Flooding"
4. 3-AOP-FLOOD, "Flooding"
5. 3-AOP-SWL-1, "Low Service Water Bay Level"

Category: H – Hazards

Subcategory: 2 – Fire or Explosion

Initiating Condition: Fire within the Protected Area not extinguished within 15 minutes of detection or explosion within the Protected Area

EAL:

HU2.1 Unusual Event

Fire in **any** Table H-1area not extinguished within 15 minutes (Note 3) of Control Room notification or verification of a control room fire alarm

Note 3: The Emergency Director should not wait until the applicable time has elapsed, but should declare the event as soon as it is determined that the condition will likely exceed the applicable time.

Table H-1 Safe Shutdown Areas

- Control Buildings and associated Electrical Tunnels and Battery Rooms
- Service Water Pump Structure and Valve Pits
- Fuel Storage Building
- Primary Auxiliary Building/Fan House
- Vapor Containment Building
- EDG Buildings
- Auxiliary Feed-pump Building
- Condensate Storage Tank
- Refueling Water Storage Tank

Mode Applicability:

All

NEI 99-01 Basis:

This EAL addresses the magnitude and extent of fires that may be potentially significant precursors of damage to safety systems. It addresses the fire, and not the degradation in performance of affected systems that may result.

As used here, detection is visual observation and report by plant personnel or sensor alarm indication.

The 15 minute time period begins with a credible notification that a fire is occurring, or indication of a fire detection system alarm/actuation. Verification of a fire detection system alarm/actuation includes actions that can be taken within the control room or other nearby site specific location to ensure that it is not spurious. An alarm is assumed to be an indication of a fire unless it is disproved within the 15 minute period by personnel dispatched to the scene. In other words, a personnel report from the scene may be used to disprove a sensor alarm if received within 15 minutes of the alarm, but shall not be required to verify the alarm.

The intent of this 15 minute duration is to size the fire and to discriminate against small fires that are readily extinguished (e.g., smoldering waste paper basket).

Escalation of this emergency classification level, if appropriate, would be based on HA2.1.

IPEC Basis:

Fire, as used in this EAL, means combustion characterized by heat and light. Sources of smoke such as slipping drive belts or overheated electrical equipment do not constitute fires. Observation of flame is preferred but is NOT required if large quantities of smoke and heat are observed.

IPEC Basis Reference(s):

1. Unit 2 FSAR Section 1.11.2 Classification of Particular Structures and Equipment
2. Unit 3 FSAR Section 16.1.2 Classification of Particular Structures and Equipment

Category: H – Hazards

Subcategory: 2 – Fire or Explosion

Initiating Condition: Fire within the Protected Area not extinguished within 15 minutes of detection or explosion within the Protected Area

EAL:

HU2.2	**Unusual Event**
Explosion within Protected Area boundary	

Mode Applicability:

All

NEI 99-01 Basis:

This EAL addresses the magnitude and extent of explosions that may be potentially significant precursors of damage to safety systems. It addresses the explosion, and not the degradation in performance of affected systems that may result.

As used here, detection is visual observation and report by plant personnel or sensor alarm indication.

This EAL addresses the magnitude and extent of explosions that may be potentially significant precursors of damage to safety systems. It addresses the explosion, and not the degradation in performance of affected systems that may result.

This EAL addresses only those explosions of sufficient force to damage permanent structures or equipment within the Protected Area.

No attempt is made to assess the actual magnitude of the damage. The occurrence of the explosion is sufficient for declaration.

The Emergency director also needs to consider any security aspects of the explosion, if applicable.

Escalation of this emergency classification level, if appropriate, would be based on HA2.1.

IPEC Basis:

As used here, an explosion is a rapid, violent, unconfined combustion or a catastrophic failure of pressurized equipment that potentially imparts significant energy to nearby structures and materials.

If the explosion is determined to be hostile in nature, the event is classified under security based EALs.

IPEC Basis Reference(s):

None

Category: H – Hazards

Subcategory: 2 – Fire or Explosion

Initiating Condition: Fire or explosion affecting the operability of plant safety systems required to establish or maintain safe shutdown

EAL:

HA2.1 Alert

Fire or explosion resulting in **EITHER**:

Visible damage to **any** Table H-1 area containing safety systems or components

OR

Control Room indication of degraded performance of safety systems

Table H-1 Safe Shutdown Areas
• Control Buildings and associated Electrical Tunnels and Battery Rooms • Service Water Pump Structure and Valve Pits • Fuel Storage Building • Primary Auxiliary Building/Fan House • Vapor Containment Building • EDG Buildings • Auxiliary Feed-pump Building • Condensate Storage Tank • Refueling Water Storage Tank

Mode Applicability:

All

NEI 99-01 Basis:

Visible damage is used to identify the magnitude of the fire or explosion and to discriminate against minor fires and explosions.

The reference to structures containing safety systems or components is included to discriminate against fires or explosions in areas having a low probability of affecting safe

operation. The significance here is not that a safety system was degraded but the fact that the fire or explosion was large enough to cause damage to these systems.

The use of visible damage should not be interpreted as mandating a lengthy damage assessment prior to classification. The declaration of an Alert and the activation of the Technical Support Center will provide the Emergency Director with the resources needed to perform detailed damage assessments.

The Emergency Director also needs to consider any security aspects of the explosion.

Escalation of this emergency classification level, if appropriate, will be based on System Malfunctions, Fission Product Barrier Degradation or Abnormal Rad Levels / Radiological Effluent EALs.

IPEC Basis:

The listed areas contain functions and systems required for the safe shutdown of the plant (ref. 1).

Fire, as used in this EAL, means combustion characterized by heat and light. Sources of smoke such as slipping drive belts or overheated electrical equipment do not constitute fires. Observation of flame is preferred but is NOT required if large quantities of smoke and heat are observed.

An explosion is a rapid, violent, unconfined combustion or a catastrophic failure of pressurized equipment that potentially imparts significant energy to nearby structures and materials.

A steam line break or steam explosion that damages permanent structures or equipment would be classified under this EAL. The method of damage is not as important as the degradation of plant structures or equipment. The need to classify the steam line break itself is considered in fission product barrier degradation monitoring (EAL Category F).

IPEC Basis Reference(s):

1. Unit 2 FSAR Section 1.11.2 Classification of Particular Structures and Equipment
2. Unit 3 FSAR Section 16.1.2 Classification of Particular Structures and Equipment

Category: H – Hazards

Subcategory: 3 – Hazardous Gas

Initiating Condition: Release of toxic, corrosive, asphyxiant or flammable gases deemed detrimental to normal plant operations

EAL:

HU3.1	**Unusual Event**
Toxic, corrosive, asphyxiant or flammable gases in amounts that have or could adversely affect normal plant operations	

Mode Applicability:

All

NEI 99-01 Basis:

This EAL is based on the release of toxic, corrosive, asphyxiant or flammable gases of sufficient quantity to affect normal plant operations.

The fact that SCBA may be worn does not eliminate the need to declare the event.

This EAL is not intended to require significant assessment or quantification. It assumes an uncontrolled process that has the potential to affect plant operations. This would preclude small or incidental releases, or releases that do not impact structures needed for plant operation.

An asphyxiant is a gas capable of reducing the level of oxygen in the body to dangerous levels. Most commonly, asphyxiants work by merely displacing air in an enclosed environment. This reduces the concentration of oxygen below the normal level of around 19%, which can lead to breathing difficulties, unconsciousness or even death.

Escalation of this emergency classification level, if appropriate, would be based on HA3.1.

IPEC Basis:

As used in this EAL, affecting normal plant operations means that activities at the plant site associated with routine testing, maintenance, or equipment operations, in accordance with normal operating or administrative procedures have been impacted. Entry into abnormal or emergency operating procedures, or deviation from normal security or radiological controls posture, is a departure from normal plant operations and thus would be considered to have been affected.

The release may have originated within the Site Boundary, or it may have originated offsite and subsequently drifted onto the Site Boundary. Offsite events (e.g., tanker truck accident releasing toxic gases, etc.) resulting in the plant being within the evacuation area should also be considered in this EAL because of the adverse effect on normal plant operations.

Some gases are toxic by their very nature. Others, like carbon dioxide, can be lethal if it reduces oxygen to low concentrations (asphyxiant) that are immediately dangerous to life and health (IDLH). Oxygen deficient atmospheres (less than 19.5% oxygen) are considered IDLH (ref. 1). NRC position is that anytime carbon dioxide is discharged in plant areas such that the area becomes uninhabitable, regardless of whether anyone is in the areas, conditions for classification exist. The EAL assumes an uncontrolled process that has the potential to affect plant operations or personnel safety. Releases occurring during planned surveillance activities or planned maintenance/tag-out activities, therefore, are excluded.

Should the release affect access to plant Safe Shutdown Areas, escalation to an Alert would be based on EAL HA3.1. Should an explosion or fire occur due to flammable gas within an affected plant area, an Alert may be appropriate based on EAL HA2.1.

IPEC Basis Reference(s):

None

Category: H – Hazards

Subcategory: 3 – Hazardous Gas

Initiating Condition: Release of toxic, corrosive, asphyxiant or flammable gases deemed detrimental to normal operation of the plant

EAL:

HU3.2 Unusual Event

Recommendation by local, county or state officials to evacuate or shelter site personnel based on offsite event

Mode Applicability:

All

NEI 99-01 Basis:

This EAL is based on the release of toxic, corrosive, asphyxiant or flammable gases of sufficient quantity to affect normal plant operations.

The fact that SCBA may be worn does not eliminate the need to declare the event.

This EAL is not intended to require significant assessment or quantification. It assumes an uncontrolled process that has the potential to affect plant operations. This would preclude small or incidental releases, or releases that do not impact structures needed for plant operation.

An asphyxiant is a gas capable of reducing the level of oxygen in the body to dangerous levels. Most commonly, asphyxiants work by merely displacing air in an enclosed environment. This reduces the concentration of oxygen below the normal level of around 19%, which can lead to breathing difficulties, unconsciousness or even death.

Escalation of this emergency classification level, if appropriate, would be based on HA3.

IPEC Basis:

This EAL is based on the existence of an uncontrolled release originating offsite and local, county or state officials have reported the need for evacuation or sheltering of site personnel. Offsite events (e.g., tanker truck accident releasing toxic gases, etc.) are considered in this EAL because they may adversely affect normal plant operations.

State officials may determine the evacuation area for offsite spills by using the Department of Transportation (DOT) Evacuation Tables for Selected Hazardous Materials in the DOT Emergency Response Guide for Hazardous Materials.

Should the release affect plant Safe Shutdown Areas, escalation to an Alert would be based on EAL HA3.1. Should an explosion or fire occur due to flammable gas within an affected plant area, an Alert may be appropriate based on EAL HA2.1.

IPEC Basis Reference(s):

None

Attachment 1 – Emergency Action Level Bases

Category: H – Hazards

Subcategory: 3 – Hazardous Gas

Initiating Condition: Access to a vital area is prohibited due to release of toxic, corrosive, asphyxiant or flammable gases which jeopardizes operation of systems required to maintain safe operations or safely shutdown the reactor

EAL:

HA3.1 Alert

Access to **any** Table H-2 area is prohibited due to release of toxic, corrosive, asphyxiant or flammable gases which jeopardizes operation of systems required to maintain safe operations or safely shutdown the reactor

Table H-2 Safe Shutdown Access Areas
• Control Buildings and associated Electrical Tunnels and Battery Rooms • Service Water Pump Structure and Valve Pits • Vapor Containment Building • Primary Auxiliary Building/Fan House • Auxiliary Feed-pump Building

Mode Applicability:

All

NEI 99-01 Basis:

Gases in a vital area can affect the ability to safely operate or safely shutdown the reactor.

The fact that SCBA may be worn does not eliminate the need to declare the event.

Declaration should not be delayed for confirmation from atmospheric testing if the atmosphere poses an immediate threat to life and health or an immediate threat of severe exposure to gases. This could be based upon documented analysis, indication of personal ill effects from exposure, or operating experience with the hazards.

If the equipment in the stated area was already inoperable, or out of service, before the event occurred, then this EAL should not be declared as it will have no adverse impact on the ability of the plant to safely operate or safely shutdown beyond that already allowed by Technical Specifications at the time of the event.

An asphyxiant is a gas capable of reducing the level of oxygen in the body to dangerous levels. Most commonly, asphyxiants work by merely displacing air in an enclosed environment. This reduces the concentration of oxygen below the normal level of around 19%, which can lead to breathing difficulties, unconsciousness or even death.

An uncontrolled release of flammable gasses within a facility structure has the potential to affect safe operation of the plant by limiting either operator or equipment operations due to the potential for ignition and resulting equipment damage/personnel injury. Flammable gasses, such as hydrogen and acetylene, are routinely used to maintain plant systems (hydrogen) or to repair equipment/components (acetylene - used in welding). This EAL assumes concentrations of flammable gasses which can ignite/support combustion.

Escalation of this emergency classification level, if appropriate, will be based on System Malfunctions, Fission Product Barrier Degradation or Abnormal Rad Levels / Radioactive Effluent EALs.

IPEC Basis:

This EAL is based on gases that have entered a plant structure in concentrations that could be unsafe for plant personnel and, therefore, preclude access to equipment necessary for the safe shutdown of the plant. Table H-2 safe shutdown access areas contain systems that are required to be locally operated to establish or maintain safe shutdown (ref. 1, 2, 3, 4, 5, 6).

IPEC Basis Reference(s):

1. Unit 2 FSAR Section 1.11.2 Classification of Particular Structures and Equipment
2. Unit 3 FSAR Section 16.1.2 Classification of Particular Structures and Equipment
3. POP 2.1 Operation at Greater than 45% Power
4. POP 1.3 Plant Startup from Zero to 45% Power
5. POP 3.1 Plant Shutdown from 45% Power
6. POP 3.1 Plant Cool down - Hot Shutdown to Cold Shutdown

Category: H – Hazards

Subcategory: 4 – Security

Initiating Condition: Confirmed security condition or threat which indicates a potential degradation in the level of safety of the plant

EAL:

HU4.1 Unusual Event

A security condition that does **not** involve a hostile action as reported by the Security Shift Supervisor

OR

A credible site-specific security threat notification

OR

A validated notification from NRC providing information of an aircraft threat

Mode Applicability:

All

NEI 99-01 Basis:

Timely and accurate communication between Security Shift Supervision and the Control Room is crucial for the implementation of effective Security EALs.

Security events which do not represent a potential degradation in the level of safety of the plant are reported under 10 CFR 73.71 or in some cases under 10 CFR 50.72. Security events assessed as hostile actions are classifiable under HA4.1, HS4.1 and HG4.1.

A higher initial classification could be made based upon the nature and timing of the security threat and potential consequences. The Shift Manager shall consider upgrading the emergency response status and emergency classification level in accordance with the site's Safeguards Contingency Plan and Emergency Plan.

1st Threshold

Reference is made to site specific security shift supervision because these individuals are the designated personnel on-site qualified and trained to confirm that a security event is occurring

or has occurred. Training on security event classification confirmation is closely controlled due to the strict secrecy controls placed on the plant Safeguards Contingency Plan.

This threshold is based on site specific security plans. Site specific Safeguards Contingency Plans are based on guidance provided by NEI 03-12.

2nd Threshold

This threshold is included to ensure that appropriate notifications for the security threat are made in a timely manner. This includes information of a credible threat. Only the plant to which the specific threat is made need declare the Notification of an Unusual Event.

The determination of "credible" is made through use of information found in the site specific Safeguards Contingency Plan.

3rd Threshold

The intent of this EAL is to ensure that notifications for the aircraft threat are made in a timely manner and that Offsite Response Organizations and plant personnel are at a state of heightened awareness regarding the credible threat. It is not the intent of this EAL to replace existing non-hostile related EALs involving aircraft.

This EAL is met when a plant receives information regarding an aircraft threat from NRC. Validation is performed by calling the NRC or by other approved methods of authentication. Only the plant to which the specific threat is made need declare the Unusual Event.

The NRC Headquarters Operations Officer (HOO) will communicate to IPEC if the threat involves an airliner (airliner is meant to be a large aircraft with the potential for causing significant damage to the plant). The status and size of the plane may be provided by NORAD through the NRC.

Escalation to Alert emergency classification level would be via HA4.1 would be appropriate if the threat involves an airliner within 30 minutes of the plant.

IPEC Basis:

Hostile Action: An act toward a nuclear power plant or its personnel that includes the use of violent force to destroy equipment, take hostages, and/or intimidate the licensee to achieve an end. This includes attack by air, land, or water using guns, explosives, projectiles, vehicles, or other devices used to deliver destructive force. Other acts that satisfy the overall intent may be included. Hostile Action should not be construed to include acts of civil disobedience or felonious acts that are not part of a concerted attack on the Nuclear Power Plant. Non-terrorism-based EALs should be used to address such activities (i.e., this may include violent acts between individuals in the owner controlled area).

0-AOP-SEC-1, "Response to Security Compromise" (ref. 2) provides guidance for response to security related events based on contingency events at the IPEC Plant.

IPEC Basis Reference(s):

1. IPEC Safeguards Contingency Plan
2. 0-AOP-SEC-1, "Response to Security Compromise"

Category: H – Hazards

Subcategory: 4 – Security

Initiating Condition: Hostile action within the owner controlled area or airborne attack threat

EAL:

HA4.1	**Alert**
A hostile action is occurring or has occurred within the Owner Controlled Area as reported by the Security Shift Supervisor **OR** A validated notification from NRC of an airliner attack threat within 30 minutes of the site	

Mode Applicability:

All

NEI 99-01 Basis:

Timely and accurate communication between Security Shift Supervision and the Control Room is crucial for the implementation of effective Security EALs.

These EALs address the contingency for a very rapid progression of events, such as that experienced on September 11, 2001. They are not premised solely on the potential for a radiological release. Rather the issue includes the need for rapid assistance due to the possibility for significant and indeterminate damage from additional air, land or water attack elements.

The fact that the site is under serious attack or is an identified attack target with minimal time available for further preparation or additional assistance to arrive requires a heightened state of readiness and implementation of protective measures that can be effective (such as on-site evacuation, dispersal or sheltering).

1st Threshold

This EAL addresses the potential for a very rapid progression of events due to a hostile action. It is not intended to address incidents that are accidental events or acts of civil disobedience,

such as small aircraft impact, hunters, or physical disputes between employees within the Owner Controlled Area. Those events are adequately addressed by other EALs.

Note that this EAL is applicable for any hostile action occurring, or that has occurred, in the Owner Controlled Area. This includes ISFSI's that may be outside the Protected Area but still within the Owner Controlled Area.

Although nuclear plant security officers are well trained and prepared to protect against hostile action, it is appropriate for Offsite Response Organizations to be notified and encouraged to begin activation (if they do not normally) to be better prepared should it be necessary to consider further actions.

If not previously notified by the NRC that the airborne hostile action was intentional, then it would be expected, although not certain, that notification by an appropriate Federal agency would follow. In this case, appropriate federal agency is intended to be NORAD, FBI, FAA or NRC. However, the declaration should not be unduly delayed awaiting Federal notification.

2nd Threshold

This EAL addresses the immediacy of an expected threat arrival or impact on the site within a relatively short time.

The intent of this EAL is to ensure that notifications for the airliner attack threat are made in a timely manner and that Offsite Response Organizations and plant personnel are at a state of heightened awareness regarding the credible threat. Airliner is meant to be a large aircraft with the potential for causing significant damage to the plant.

This EAL is met when a plant receives information regarding an airliner attack threat from NRC and the airliner is within 30 minutes of the plant. Only the plant to which the specific threat is made need declare the Alert.

The NRC Headquarters Operations Officer (HOO) will communicate to IPEC if the threat involves an airliner (airliner is meant to be a large aircraft with the potential for causing

significant damage to the plant). The status and size of the plane may be provided by NORAD through the NRC.

IPEC Basis:

Hostile Action: An act toward a nuclear power plant or its personnel that includes the use of violent force to destroy equipment, take hostages, and/or intimidate the licensee to achieve an end. This includes attack by air, land, or water using guns, explosives, projectiles, vehicles, or other devices used to deliver destructive force. Other acts that satisfy the overall intent may be included. Hostile Action should not be construed to include acts of civil disobedience or felonious acts that are not part of a concerted attack on the nuclear power plant. Non-terrorism-based EALs should be used to address such activities (i.e., this may include violent acts between individuals in the owner controlled area).

IPEC Basis Reference(s):

1. IPEC Safeguards Contingency Plan
2. 0-AOP-SEC-1, "Response to Security Compromise"

Category: H – Hazards

Subcategory: 4 – Security

Initiating Condition: Hostile action within the Protected Area

EAL:

HS4.1	**Site Area Emergency**
A hostile action is occurring or has occurred within the Protected Area as reported by the Security Shift Supervisor	

Mode Applicability:

All

NEI 99-01 Basis:

This condition represents an escalated threat to plant safety above that contained in the Alert in that a hostile force has progressed from the Owner Controlled Area to the Protected Area.

This EAL addresses the contingency for a very rapid progression of events, such as that experienced on September 11, 2001. It is not premised solely on the potential for a radiological release. Rather the issue includes the need for rapid assistance due to the possibility for significant and indeterminate damage from additional air, land or water attack elements.

The fact that the site is under serious attack with minimal time available for further preparation or additional assistance to arrive requires Offsite Response Organizations readiness and preparation for the implementation of protective measures.

This EAL addresses the potential for a very rapid progression of events due to a hostile action. It is not intended to address incidents that are accidental events or acts of civil disobedience, such as small aircraft impact, hunters, or physical disputes between employees within the Protected Area.

Although nuclear plant security officers are well trained and prepared to protect against hostile action, it is appropriate for Off-Site Response Organizations to be notified and encouraged to begin preparations for public protective actions (if they do not normally) to be better prepared should it be necessary to consider further actions.

If not previously notified by NRC that the airborne hostile action was intentional, then it would be expected, although not certain, that notification by an appropriate Federal agency would follow. In this case, appropriate federal agency is intended to be NORAD, FBI, FAA or NRC. However, the declaration should not be unduly delayed awaiting Federal notification.

Escalation of this emergency classification level, if appropriate, would be based on actual plant status after impact or progression of attack.

IPEC Basis:

Reference is made to the Security Shift Supervisor because this individual is the designated on-site person qualified and trained to confirm that a security event is occurring or has occurred. Training on security event classification confirmation is closely controlled due to the strict secrecy controls placed on the IPEC Safeguards Contingency Plan (Safeguards) (ref. 1).

IPEC Basis Reference(s):

1. IPEC Safeguards Contingency Plan
2. 0-AOP-SEC-1 Response to Security Compromise

Category: H – Hazards

Subcategory: 4 – Security

Initiating Condition: Hostile action resulting in loss of physical control of the facility

EAL:

HG4.1 General Emergency

A hostile action has occurred such that plant personnel are unable to operate equipment required to maintain safety functions

OR

A hostile action has caused failure of Spent Fuel Cooling Systems and imminent fuel damage is likely

Mode Applicability:

All

NEI 99-01 Basis:

1st Threshold

This EAL threshold encompasses conditions under which a hostile action has resulted in a loss of physical control of Vital Areas (containing vital equipment or controls of vital equipment) required to maintain safety functions and control of that equipment cannot be transferred to and operated from another location.

These safety functions are reactivity control, RCS inventory, and secondary heat removal.

Loss of physical control of the control room or remote shutdown capability alone may not prevent the ability to maintain safety functions per se. Design of the remote shutdown capability and the location of the transfer switches should be taken into account. Primary emphasis should be placed on those components and instruments that supply protection for and information about safety functions.

If control of the plant equipment necessary to maintain safety functions can be transferred to another location, then the threshold is not met.

2nd Threshold

This EAL threshold addresses failure of spent fuel cooling systems as a result of hostile action if imminent fuel damage is likely, such as when a freshly off-loaded reactor core is in the spent fuel pool.

IPEC Basis:

None

IPEC Basis Reference(s):

1. IPEC Safeguards Contingency Plan
2. 0-AOP-SEC-1 Response to Security Compromise

Attachment 1 – Emergency Action Level Bases

Category: H – Hazards

Subcategory: 5 – Control Room Evacuation

Initiating Condition: Control Room evacuation has been initiated

EAL:

HA5.1 **Alert**
Control Room evacuation initiated

Mode Applicability:

All

NEI 99-01 Basis:

With the Control Room evacuated, additional support, monitoring and direction through the Technical Support Center and/or other emergency response facility is necessary.

Inability to establish plant control from outside the control room will escalate this event to a Site Area Emergency.

IPEC Basis:

2[3]-AOP-SSD, "Control Room Inaccessibility Safe Shutdown Control", provides the instructions for tripping the unit, and maintaining RCS inventory from outside the Control Room. The Shift Manager (SM) determines if the Control Room is inoperable and requires evacuation. Control Room inhabitability may be caused by fire, dense smoke, noxious fumes, bomb threat in or adjacent to the Control Room, or other life threatening conditions.

IPEC Basis Reference(s):

1. 2-AOP-SSD, "Control Room Inaccessibility Safe Shutdown Control"
2. 3-AOP-SSD, "Control Room Inaccessibility Safe Shutdown Control"

Attachment 1 – Emergency Action Level Bases

Category: H – Hazards

Subcategory: 5 – Control Room Evacuation

Initiating Condition: Control Room evacuation has been initiated and plant control **cannot** be established

EAL:

HS5.1 Site Area Emergency

Control Room evacuation has been initiated

AND

Control of the plant **cannot** be established within 15 min.

Mode Applicability:

All

NEI 99-01 Basis:

The intent of this EAL is to capture those events where control of the plant cannot be reestablished in a timely manner. In this case, expeditious transfer of control of safety systems has not occurred (although fission product barrier damage may not yet be indicated).

The intent of the EAL is to establish control of important plant equipment and knowledge of important plant parameters in a timely manner. Primary emphasis should be placed on those components and instruments that supply protection for and information about safety functions. Typically, these safety functions are reactivity control, RCS inventory, and secondary heat removal.

The determination of whether or not control is established at the remote shutdown panel is based on Emergency Director (ED) judgment. The Emergency Director is expected to make a reasonable, informed judgment within the site specific time for transfer (15 min.) that the Shift Manager has control of the plant from the remote shutdown panel.

Escalation of this emergency classification level, if appropriate, would be by Fission Product Barrier Degradation or Abnormal Rad Levels/Radiological Effluent EALs.

IPEC Basis:

2[3]-AOP-SSD, "Control Room Inaccessibility Safe Shutdown Control", provides the instructions for tripping the unit, and maintaining RCS inventory from outside the Control Room. The Shift Manager (SM) determines if the Control Room is inoperable and requires evacuation. Control Room inhabitability may be caused by fire, dense smoke, noxious fumes, bomb threat in or adjacent to the Control Room, or other life threatening conditions.

The 15 minute criteria applies from the time that the Control Room is evacuated.

IPEC Basis Reference(s):

1. 2-AOP-SSD, "Control Room Inaccessibility Safe Shutdown Control"
2. 3-AOP-SSD, "Control Room Inaccessibility Safe Shutdown Control"

Category: H – Hazards

Subcategory: 6 – Judgment

Initiating Condition: Other conditions exist that in the judgment of the Emergency Director warrant declaration of a UE

EAL:

HU6.1 Unusual Event

Other conditions exist that in the judgment of the Emergency Director indicate that events are in progress or have occurred which indicate a potential degradation of the level of safety of the plant or indicate a security threat to facility protection has been initiated. **No** releases of radioactive material requiring offsite response or monitoring are expected unless further degradation of safety systems occurs

Mode Applicability:

All

NEI 99-01 Basis:

This EAL addresses unanticipated conditions not addressed explicitly elsewhere but that warrant declaration of an emergency because conditions exist which are believed by the Emergency Director to fall under the Unusual Event emergency classification level.

IPEC Basis:

The Emergency Director is the designated onsite individual having the responsibility and authority for implementing the IPEC Emergency Plan. The Shift Manager (SM) initially acts in the capacity of the Emergency Director and takes actions as outlined in the Emergency Plan implementing procedures. If required by the emergency classification or if deemed appropriate by the Emergency Director, emergency response personnel are notified and instructed to report to their emergency response locations. In this manner, the individual usually in charge of activities in the Control Room is responsible for initiating the necessary emergency response, but Plant Management is expected to manage the emergency response as soon as available to do so in anticipation of the possible wide-ranging responsibilities associated with managing a major emergency (ref. 1).

IPEC Basis Reference(s):

1. IPEC Emergency Plan Part 2 Section B, Station Emergency Response Organization

Category: H – Hazards

Subcategory: 6 – Judgment

Initiating Condition: Other conditions exist that in the judgment of the Emergency Director warrant declaration of an Alert

EAL:

HA6.1 Alert

Other conditions exist that in the judgment of the Emergency Director indicate that events are in progress or have occurred which involve **EITHER**:

An actual or potential substantial degradation of the level of safety of the plant

OR

A security event that involves probable life threatening risk to site personnel or damage to site equipment because of hostile action

Any releases are expected to be limited to small fractions of the EPA Protective Action Guideline exposure levels beyond the site boundary.

Mode Applicability:

All

NEI 99-01 Basis:

This EAL addresses unanticipated conditions not addressed explicitly elsewhere but that warrant declaration of an emergency because conditions exist which are believed by the Emergency Director to fall under the Alert emergency classification level.

IPEC Basis:

The Emergency Director is the designated onsite individual having the responsibility and authority for implementing the IPEC Emergency Plan. The Shift Manager (SM) initially acts in the capacity of the Emergency Director and takes actions as outlined in the Emergency Plan implementing procedures. If required by the emergency classification or if deemed appropriate by the Emergency Director, emergency response personnel are notified and instructed to report to their emergency response locations. In this manner, the individual usually in charge of activities in the Control Room is responsible for initiating the necessary emergency response,

but Plant Management is expected to manage the emergency response as soon as available to do so in anticipation of the possible wide-ranging responsibilities associated with managing a major emergency (ref.1).

IPEC Basis Reference(s):

1. IPEC Emergency Plan Part 2 Section B, Station Emergency Response, Organization

Attachment 1 – Emergency Action Level Bases

Category: H – Hazards

Subcategory: 6 – Judgment

Initiating Condition: Other conditions exist that in the judgment of the Emergency Director warrant declaration of Site Area Emergency

EAL:

HS6.1 Site Area Emergency

Other conditions exist that in the judgment of the Emergency Director indicate that events are in progress or have occurred which involve **EITHER**:

Actual or likely major failures of plant functions needed for protection of the public

OR

Hostile action that results in intentional damage or malicious acts; 1) toward site personnel or equipment that could lead to the likely failure of or; 2) that prevent effective access to equipment needed for the protection of the public

Any releases are not expected to result in exposure levels which exceed EPA Protective Action Guideline exposure levels (1 Rem TEDE and 5 Rem thyroid CDE) beyond the site boundary

Mode Applicability:

All

NEI 99-01 Basis:

This EAL addresses unanticipated conditions not addressed explicitly elsewhere but that warrant declaration of an emergency because conditions exist which are believed by the Emergency Director to fall under the emergency class description for Site Area Emergency.

IPEC Basis:

The Emergency Director is the designated onsite individual having the responsibility and authority for implementing the IPEC Emergency Plan. The Shift Manager (SM) initially acts in the capacity of the Emergency Director and takes actions as outlined in the Emergency Plan implementing procedures. If required by the emergency classification or if deemed appropriate by the Emergency Director, emergency response personnel are notified and instructed to report to their emergency response locations. In this manner, the individual usually in charge of activities in the Control Room is responsible for initiating the necessary emergency response, but Plant Management is expected to manage the emergency response as soon as available to do so in anticipation of the possible wide-ranging responsibilities associated with managing a major emergency (ref. 1).

IPEC Basis Reference(s):

1. IPEC Emergency Plan Part 2 Section B, Station Emergency Response, Organization

Category: H – Hazards

Subcategory: 6 – Judgment

Initiating Condition: Other conditions existing that in the judgment of the Emergency Director warrant declaration of General Emergency

EAL:

HG6.1 General Emergency

Other conditions exist that in the judgment of the Emergency Director indicate that events are in progress or have occurred which involve **EITHER**:

Actual or imminent substantial core degradation or melting with potential for loss of containment integrity

OR

Hostile action that results in an actual loss of physical control of the facility

Releases can be reasonably expected to exceed EPA Protective Action Guideline exposure levels (1 Rem TEDE and 5 Rem thyroid CDE) beyond the site boundary

Mode Applicability:

All

NEI 99-01 Basis:

This EAL addresses unanticipated conditions not addressed explicitly elsewhere but that warrant declaration of an emergency because conditions exist which are believed by the Emergency Director to fall under the emergency classification level description for General Emergency.

IPEC Basis:

The Emergency Director is the designated onsite individual having the responsibility and authority for implementing the IPEC Emergency Plan. The Shift Manager (SM) initially acts in the capacity of the Emergency Director and takes actions as outlined in the Emergency Plan implementing procedures. If required by the emergency classification or if deemed appropriate by the Emergency Director, emergency response personnel are notified and instructed to report to their emergency response locations. In this manner, the individual usually in charge of

activities in the Control Room is responsible for initiating the necessary emergency response, but Plant Management is expected to manage the emergency response as soon as available to do so in anticipation of the possible wide-ranging responsibilities associated with managing a major emergency (ref. 1).

Releases can reasonably be expected to exceed EPA PAG plume exposure levels outside the Site Boundary.

IPEC Basis Reference(s):

1. IPEC Emergency Plan Part 2 Section B, Station Emergency Response, Organization

Category S – System Malfunction

EAL Group: Hot Conditions (RCS temperature > 200°F); EALs in this category are applicable only in one or more hot operating modes.

Numerous system-related equipment failure events that warrant emergency classification have been identified in this category. They may pose actual or potential threats to plant safety.

The events of this category pertain to the following subcategories:

1. Loss of AC Power

Loss of emergency AC electrical power can compromise plant safety system operability including decay heat removal and emergency core cooling systems which may be necessary to ensure fission product barrier integrity. This category includes loss of onsite and offsite sources for 480 VAC safeguards buses.

2. ATWS / Criticality

Events related to failure of the Reactor Protection System (RPS) to initiate and complete reactor trips. In the plant licensing basis, postulated failures of the RPS to complete a reactor trip comprise a specific set of analyzed events referred to as Anticipated Transient Without Scram (ATWS) events. For EAL classification however, ATWS is intended to mean any trip failure event that does not achieve reactor shutdown. If RPS actuation fails to assure reactor shutdown, positive control of reactivity is at risk and could cause a threat to Fuel Clad, RCS and Containment integrity. Inadvertent criticalities pose potential personnel safety hazards as well being indicative of losses of reactivity control.

3. Inability to Reach Shutdown Conditions

One EAL falls into this subcategory. It is related to the failure of the plant to be brought to the required plant operating condition required by technical specifications if a limiting condition for operation (LCO) is not met.

4. Instrumentation / Communications

Certain events that degrade plant operator ability to effectively assess plant conditions within the plant warrant emergency classification. Loss of annunciators or indicators is in this subcategory.

Certain events that degrade plant operator ability to effectively communicate with essential personnel within or external to the plant warrant emergency classification.

5. Fuel Clad Degradation

During normal operation, reactor coolant fission product activity is very low. Small concentrations of fission products in the coolant are primarily from the fission of tramp uranium in the fuel clad or minor perforations in the clad itself. Any significant increase from these base-line levels (2% - 5% clad failures) is indicative of fuel failures and is covered under the Fission Product Barrier Degradation category. However, lesser amounts of clad damage may result in coolant activity exceeding Technical Specification limits. These fission products will be circulated with the reactor coolant and can be detected by coolant sampling.

6. RCS Leakage

The Reactor Vessel provides a volume for the coolant that covers the reactor core. The Reactor Vessel and associated pressure piping (reactor coolant system) together provide a barrier to limit the release of radioactive material should the reactor fuel clad integrity fail.

Excessive RCS leakage greater than Technical Specification limits are utilized to indicate potential pipe cracks that may propagate to an extent threatening fuel clad, RCS and Containment integrity.

7. Loss of DC Power

Loss of vital 125 VDC DC electrical power can compromise plant safety system operability including decay heat removal and emergency core cooling systems which may be necessary to ensure fission product barrier integrity.

Attachment 1 – Emergency Action Level Bases

Category: S – System Malfunction

Subcategory: 1 – Loss of Power

Initiating Condition: Loss of **all** offsite AC power to emergency buses for 15 minutes or longer

EAL:

SU1.1 Unusual Event

Loss of **all** offsite AC power (Table S-1) to 480 V safeguards buses (5A, 2A/3A, 6A) for ≥ 15 min. (Note 3)

Note 3: The Emergency Director should not wait until the applicable time has elapsed, but should declare the event as soon as it is determined that the condition will likely exceed the applicable time.

Table S-1 Safeguard Bus AC Power Sources

	Onsite	Offsite
Unit 2	* 480 V EDG 21 * 480 V EDG 22 * 480 V EDG 23 * Appendix R Diesel	* Unit Auxiliary transformer* * Station Auxiliary transformer* * 13.8 KV gas turbine auto transformer* * * With 86P or 86BU tripped, all offsite power supplies must be considered as one power supply.
Unit 3	* 480V EDG 31 * 480V EDG 32 * 480V EDG 33 * Appendix R Diesel	* Unit Auxiliary transformer * Station Auxiliary transformer * 13W92 feeder * 13W93 feeder

Mode Applicability:

1 - Power Operations, 2 - Startup, 3 – Hot Standby, 4 - Hot Shutdown

NEI 99-01 Basis:

Prolonged loss of off-site AC power reduces required redundancy and potentially degrades the level of safety of the plant by rendering the plant more vulnerable to a complete loss of AC power to emergency buses.

Fifteen minutes was selected as a threshold to exclude transient or momentary losses of off-site power.

IPEC Basis:

The 15-minute interval was selected as a threshold to exclude transient or momentary power losses. If neither emergency bus is energized by an offsite source within 15 minutes, an Unusual Event is declared under this EAL.

Unit 2

A single-line diagram showing the connections of the main generator to the power system grid and standby power source is shown in Plant Drawing 250907 [Formerly UFSAR Figure 8.2-2] (ref. 1).

Three external sources of standby power are available to Indian Point Unit 2. They are the 138- kV tie from the Buchanan 345-kV substation, the 138-kV Buchanan-Millwood ties, and the gas turbine generators. Upon loss of 345/138-kV autotransformer supply at Buchanan, two 138-kV ties are designed to provide additional auxiliary power from the Millwood 138-kV substation. A further source of reliable auxiliary power, independent of transmission system connections, is provided by the Appendix R Diesel Generator. The Appendix R Diesel Generator can provide an alternate backup power source in case of loss of onsite emergency power and concurrent loss of offsite power as well as required auxiliary power for alternate safe shutdown systems equipment.

The plant turbine generator is a main source of 6.9-kV auxiliary electrical power during "online" plant operation. Power to the auxiliaries on 6.9-kV Buses 1 thru 4 is supplied by a 22/6.9-kV unit auxiliary transformer that is connected to the main generator. Power to the auxiliaries on

6.9-kV buses 5 and 6 during "on line" plant operation is supplied by a 13.8/6.9-kV station auxiliary transformer connected to an offsite supply. Power to the 480-V buses is supplied from four 6900/480-V station service transformers.

The 6.9-kV system is arranged as six buses. During normal plant operation, two buses (5 and 6) receive power from the 138-kV system by bus main breakers and the 138/6.9-kV station auxiliary transformer, while buses 1, 2, 3, and 4 receive power from the main generator by bus main breakers and the unit auxiliary transformer. The 480-V switchgear buses are supplied from the 6.9-kV buses as follows: 2A from 2, 3A from 3, 5A from 5, and 6A from 6 (buses 2A and 3A are within the same power train). Tie breakers are provided between 480-V Switchgear buses 2A and 3A, 2A and 5A, and 3A and 6A. (ref. 2, 3, 4)

Unit 3

A single-line diagram, showing the connections of the main generator to the power system grid and to standby power source is shown on Plant Drawing 9321-F-33853 [Formerly Figure 8.2-1] (ref. 5).

Offsite (standby) power is supplied from Buchanan Substation by 138 kV and 345 kV feeders, and two underground 13.8 kV feeders. In addition, there is an Appendix R Diesel Generator. The 13.8 kV feeders are connected to the 6.9 kV buses through autotransformers. The 480 volt engineered safety feature buses are connected to the 6.9 kV buses through station auxiliary transformers.

The 6900 volt system is divided into seven buses. These buses supply 6900 volt auxiliaries directly and 480 volt auxiliaries via the station service transformers. Two buses, numbers 5 and 6, are connected to the 138 kV system via bus main breakers and the Station Auxiliary Transformer. An alternate connection is available to the Appendix R Diesel Generator and/or the 13.8 kV off-site power network. Buses No. 1, 2, 3, and 4 are connected to the generator main breakers and the Unit Auxiliary Transformer. Buses No. 1 and 2 can be tied to Bus No. 5 and Buses No. 3 and 4 can be tied to Bus No. 6 via bus tie breakers to provide auxiliary power during unit down time. The 480 volt system consists of seven buses, each supplied from a

6900 volt bus via a station service transformer. Four of these Buses, No. 2A, 3A, 5A and 6A, supplied from Buses No. 2, 3, 5, and 6 respectively, comprise the safety related 480 volt system. (ref. 2, 3)

IPEC Basis Reference(s):

1. Plant Drawing 250907 [Formerly UFSAR Figure 8.2-2]
2. FSAR 8.2
3. 2-ECA-0.0, "Loss of All AC Power"
4. 3-ECA-0.0, "Loss of All AC Power"
5. Plant Drawing 9321-F-33853 [Formerly Figure 8.2-1]

Attachment 1 – Emergency Action Level Bases

Category: S – System Malfunction

Subcategory: 1 – Loss of Power

Initiating Condition: AC power capability to safeguards buses reduced to a single power source for 15 minutes or longer such that **any** additional single failure would result in loss of **all** AC power to safeguard buses

EAL:

SA1.1 Alert

AC power capability to 480 V safeguards buses (5A, 2A/3A, 6A) reduced to a single power source (Table S-1) for ≥ 15 min. (Note 3) such that **any** additional single failure would result in loss of **all** AC power to safeguard buses

Note 3: The Emergency Director should not wait until the applicable time has elapsed, but should declare the event as soon as it is determined that the condition will likely exceed the applicable time.

Table S-1 Safeguard Bus AC Power Sources

	Onsite	Offsite
Unit 2	* 480 V EDG 21 * 480 V EDG 22 * 480 V EDG 23 * Appendix R Diesel	* Unit Auxiliary transformer* * Station Auxiliary transformer* * 13.8 KV gas turbine auto transformer* * * With 86P or 86BU tripped, all offsite power supplies must be considered as one power supply.
Unit 3	* 480V EDG 31 * 480V EDG 32 * 480V EDG 33 * Appendix R Diesel	* Unit Auxiliary transformer * Station Auxiliary transformer * 13W92 feeder * 13W93 feeder

Mode Applicability:

1 - Power Operations, 2 - Startup, 3 – Hot Standby, 4 - Hot Shutdown

NEI 99-01 Basis:

This EAL is intended to provide an escalation from EAL SU.1.1

The condition indicated by this EAL is the degradation of the off-site and on-site AC power systems such that any additional single failure would result in a loss of all AC power to the safeguards buses. This condition could occur due to a loss of off-site power with a concurrent failure of two emergency generators to supply power to their emergency buses. Another related condition could be the loss of all off-site power and loss of on-site emergency generators with only one train of emergency buses being back fed from the unit main generator, or the loss of on-site emergency generators with only one train of emergency buses being back-fed from off-site power. The subsequent loss of this single power source would escalate the event to a Site Area Emergency in accordance with SS1.1.

Fifteen minutes was selected as a threshold to exclude transient or momentary losses of power.

IPEC Basis:

The 15-minute interval was selected as a threshold to exclude transient or momentary power losses. If the capability of a second source of emergency bus power is not restored within 15 minutes, an Alert is declared under this EAL.

The condition indicated by this EAL would include the degradation of the offsite power with a concurrent failure of all but one emergency generator to supply power to its emergency bus. Another related condition could be the loss of all offsite power and loss of onsite emergency diesels with only one train of emergency buses being fed from the unit main generator, or the loss of onsite emergency diesels with only one train of emergency buses being fed from offsite power. The subsequent loss of this single power source would result in a loss of all AC to the 480 V safeguards buses.

Indian Point Unit 2 has a blackout/unit trip/no safety injection logic that opens all the normal supply breakers and locks them out from re-closure. The blackout is sensed by under voltage on either 480V Bus 5A or 6A. The unit trip is sensed by lockout relays 86P and 86BU.

Therefore, with 86P or 86BU relays tripped, under voltage on Bus 5A or 6A (a single failure) would cause a loss of all offsite power to the "essential buses." For the condition where all emergency diesel generators are inoperable when the unit is shut down and relays 86P and 86BU are not reset, a loss of power to either 480V Bus 5A or 480V Bus 6A will cause the normal supply breakers to all 480V buses to open.

This hot condition EAL is equivalent to the cold condition loss of AC power EAL CU1.1.

IPEC Basis Reference(s):

1. FSAR Section 8.2
2. 2-ECA-0.0, "Loss of All AC Power"
3. 3-ECA-0.0, "Loss of All AC Power"

Attachment 1 – Emergency Action Level Bases

Category: S – System Malfunction

Subcategory: 1 – Loss of Power

Initiating Condition: Loss of **all** offsite power and loss of **all** onsite AC power to safeguards buses for 15 minutes or longer

EAL:

SS1.1 Site Area Emergency

Loss of **all** offsite and **all** onsite AC power (Table S-1) to 480 V safeguards buses (5A, 2A/3A, 6A) for ≥ 15 min. (Note 3)

Note 3: The Emergency Director should not wait until the applicable time has elapsed, but should declare the event as soon as it is determined that the condition will likely exceed the applicable time.

Table S-1 Safeguard Bus AC Power Sources

	Onsite	Offsite
Unit 2	* 480 V EDG 21 * 480 V EDG 22 * 480 V EDG 23 * Appendix R Diesel	* Unit Auxiliary transformer* * Station Auxiliary transformer* * 13.8 KV gas turbine auto transformer* * * With 86P or 86BU tripped, all offsite power supplies must be considered as one power supply.
Unit 3	* 480V EDG 31 * 480V EDG 32 * 480V EDG 33 * Appendix R Diesel	* Unit Auxiliary transformer * Station Auxiliary transformer * 13W92 feeder * 13W93 feeder

Mode Applicability:

1 - Power Operations, 2 - Startup, 3 – Hot Standby, 4 - Hot Shutdown

NEI 99-01 Basis:

Loss of all AC power to safeguards buses compromises all plant safety systems requiring electric power including RHR, ECCS, Containment Heat Removal and the Ultimate Heat Sink. Prolonged loss of all AC power to safeguards buses will lead to loss of Fuel Clad, RCS, and Containment, thus this event can escalate to a General Emergency.

Fifteen minutes was selected as a threshold to exclude transient or momentary losses of off-site power.

Escalation to General Emergency is via Fission Product Barrier Degradation or EAL SG1.1.

IPEC Basis:

This EAL is the hot condition equivalent of the cold condition loss of all AC power EAL CA1.1. When in Cold Shutdown, Refuel, or Defueled mode, the event can be classified as an Alert because of the significantly reduced decay heat, lower temperature and pressure, increasing the time to restore one of the emergency buses, relative to that existing when in hot conditions.

Unit 2

A single-line diagram showing the connections of the main generator to the power system grid and standby power source is shown in Plant Drawing 250907 [Formerly UFSAR Figure 8.2-2] (ref. 1).

Three external sources of standby power are available to Indian Point Unit 2. They are the 138- kV tie from the Buchanan 345-kV substation, the 138-kV Buchanan-Millwood ties, and the gas turbine generators. Upon loss of 345/138-kV autotransformer supply at Buchanan, two 138-kV ties are designed to provide additional auxiliary power from the Millwood 138-kV substation. A further source of reliable auxiliary power, independent of transmission system connections, is provided by the Appendix R Diesel Generator. The Appendix R Diesel Generator can provide an alternate backup power source in case of loss of onsite emergency power and concurrent loss of offsite power as well as required auxiliary power for alternate safe shutdown systems equipment.

The plant turbine generator is a main source of 6.9-kV auxiliary electrical power during "online" plant operation. Power to the auxiliaries on 6.9-kV Buses 1 thru 4 is supplied by a 22/6.9-kV unit auxiliary transformer that is connected to the main generator. Power to the auxiliaries on 6.9-kV buses 5 and 6 during "on line" plant operation is supplied by a 13.8/6.9-kV station auxiliary transformer connected to an offsite supply. Power to the 480-V buses is supplied from four 6900/480-V station service transformers.

The 6.9-kV system is arranged as six buses. During normal plant operation, two buses (5 and 6) receive power from the 138-kV system by bus main breakers and the 138/6.9-kV station auxiliary transformer, while buses 1, 2, 3, and 4 receive power from the main generator by bus main breakers and the unit auxiliary transformer. The 480-V switchgear buses are supplied from the 6.9-kV buses as follows: 2A from 2, 3A from 3, 5A from 5, and 6A from 6 (buses 2A and 3A are within the same power train). Tie breakers are provided between 480-V Switchgear buses 2A and 3A, 2A and 5A, and 3A and 6A. One emergency diesel-generator provides emergency power to bus 5A, one to 6A, and the other two buses 2A and 3A. Each emergency diesel generator will automatically start on a safety injection signal or upon under voltage on any 480-V switchgear bus. (ref. 2, 3, 4)

Unit 3

A single-line diagram, showing the connections of the main generator to the power system grid and to standby power source is shown on Plant Drawing 9321-F-33853 [Formerly Figure 8.2-1] (ref. 5).

Offsite (standby) power is supplied from Buchanan Substation by 138 kV and 345 kV feeders, and two underground 13.8 kV feeders. In addition, there is 1-25.4 MW and 1-16.9 MW combustion turbine generators at Buchanan substation connected to the 13.8 kV feeders and a 21 MW combustion turbine generator located at the Indian Point Site. The 13.8 kV feeders are connected to the 6.9 kV buses through autotransformers. The 480 volt engineered safety feature buses are connected to the 6.9 kV buses through station auxiliary transformers.

The 6900 volt system is divided into seven buses. These buses supply 6900 volt auxiliaries directly and 480 volt auxiliaries via the station service transformers. Two buses, numbers 5 and 6, are connected to the 138 kV system via bus main breakers and the Station Auxiliary Transformer. An alternate connection is available to the Appendix R Diesel Generator and/or the 13.8 kV off-site power network. Buses No. 1, 2, 3, and 4 are connected to the generator main breakers and the Unit Auxiliary Transformer. Buses No. 1 and 2 can be tied to Bus No. 5 and Buses No. 3 and 4 can be tied to Bus No. 6 via bus tie breakers to provide auxiliary power during unit down time. The 480 volt system consists of seven buses, each supplied from a 6900 volt bus via a station service transformer. Four of these Buses, No. 2A, 3A, 5A and 6A, supplied from Buses No. 2, 3, 5, and 6 respectively, comprise the safety related 480 volt system. One emergency diesel-generator set is connected to bus No. 5A, one to 6A and the third to the combination of Bus No. 2A and Bus 3A. Each diesel generator is automatically started upon under-voltage on its associated 480 volt bus. (ref. 2, 3, 4)

IPEC Basis Reference(s):

1. Plant Drawing 250907 [Formerly UFSAR Figure 8.2-2]
2. FSAR 8.2
3. 2-ECA-0.0 Loss of All AC Power
4. 3-ECA-0.0, "Loss of All AC Power"
5. Plant Drawing 9321-F-33853 [Formerly Figure 8.2-1]

Attachment 1 – Emergency Action Level Bases

Category: S –System Malfunction

Subcategory: 1 – Loss of Power

Initiating Condition: Prolonged loss of **all** offsite and **all** onsite AC power to safeguards buses

EAL:

SG1.1 General Emergency

Loss of **all** offsite and **all** onsite AC power (Table S-1) to 480 V safeguards buses (5A, 2A/3A, 6A)

AND EITHER:

Restoration of at least one safeguards bus within 4 hours is **not** likely

OR

Actual or imminent conditions requiring entry into ORANGE or RED path on F-0.2, "CORE COOLING"

Table S-1 Safeguard Bus AC Power Sources

	Onsite	Offsite
Unit 2	* 480 V EDG 21 * 480 V EDG 22 * 480 V EDG 23 * Appendix R Diesel	* Unit Auxiliary transformer* * Station Auxiliary transformer* * 13.8 KV gas turbine auto transformer* * * With 86P or 86BU tripped, all offsite power supplies must be considered as one power supply.
Unit 3	* 480V EDG 31 * 480V EDG 32 * 480V EDG 33 * Appendix R Diesel	* Unit Auxiliary transformer * Station Auxiliary transformer * 13W92 feeder * 13W93 feeder

Mode Applicability:

1 - Power Operations, 2 - Startup, 3 – Hot Standby, 4 - Hot Shutdown

NEI 99-01 Basis:

Loss of all AC power to safeguards buses compromises all plant safety systems requiring electric power including RHR, ECCS, Containment Heat Removal and the Ultimate Heat Sink. Prolonged loss of all AC power to safeguards buses will lead to loss of fuel clad, RCS, and containment, thus warranting declaration of a General Emergency.

The four hours to restore AC power is based on a site blackout coping analysis performed in conformance with 10 CFR 50.63 and Regulatory Guide 1.155, "Station Blackout" Although this EAL may be viewed as redundant to the Fission Product Barrier Degradation EALs, its inclusion is necessary to better assure timely recognition and emergency response.

This EAL is specified to assure that in the unlikely event of a prolonged loss of all safeguards bus AC power, timely recognition of the seriousness of the event occurs and that declaration of a General Emergency occurs as early as is appropriate, based on a reasonable assessment of the event trajectory.

The likelihood of restoring at least one safeguards bus should be based on a realistic appraisal of the situation since a delay in an upgrade decision based on only a chance of mitigating the event could result in a loss of valuable time in preparing and implementing public protective actions.

In addition, under these conditions, fission product barrier monitoring capability may be degraded.

Although it may be difficult to predict when power can be restored, it is necessary to give the Emergency Director a reasonable idea of how quickly (s)he may need to declare a General Emergency based on two major considerations:

1. Are there any present indications that core cooling is already degraded to the point that loss or potential loss of Fission Product Barriers is imminent?

2. If there are no present indications of such core cooling degradation, how likely is it that power can be restored in time to assure that a loss of two barriers with a potential loss of the third barrier can be prevented?

Thus, indication of continuing core cooling degradation must be based on Fission Product Barrier monitoring with particular emphasis on Emergency Director judgment as it relates to imminent loss or potential loss of fission product barriers and degraded ability to monitor fission product barriers.

IPEC Basis:

Unit 2

A single-line diagram showing the connections of the main generator to the power system grid and standby power source is shown in Plant Drawing 250907 [Formerly UFSAR Figure 8.2-2] (ref. 1).

Three external sources of standby power are available to Indian Point Unit 2. They are the 138- kV tie from the Buchanan 345-kV substation, the 138-kV Buchanan-Millwood ties, and the gas turbine generators. Upon loss of 345/138-kV autotransformer supply at Buchanan, two 138-kV ties are designed to provide additional auxiliary power from the Millwood 138-kV substation. A further source of reliable auxiliary power, independent of transmission system connections, is provided by the Appendix R Diesel Generator. The Appendix R Diesel Generator can provide an alternate backup power source in case of loss of onsite emergency power and concurrent loss of offsite power as well as required auxiliary power for alternate safe shutdown systems equipment.

The plant turbine generator is a main source of 6.9-kV auxiliary electrical power during "online" plant operation. Power to the auxiliaries on 6.9-kV Buses 1 thru 4 is supplied by a 22/6.9-kV unit auxiliary transformer that is connected to the main generator. Power to the auxiliaries on 6.9-kV buses 5 and 6 during “on line” plant operation is supplied by a 13.8/6.9-kV station auxiliary transformer connected to an offsite supply. Power to the 480-V buses is supplied from four 6900/480-V station service transformers.

The 6.9-kV system is arranged as six buses. During normal plant operation, two buses (5 and 6) receive power from the 138-kV system by bus main breakers and the 138/6.9-kV station auxiliary transformer, while buses 1, 2, 3, and 4 receive power from the main generator by bus main breakers and the unit auxiliary transformer. The 480-V switchgear buses are supplied from the 6.9-kV buses as follows: 2A from 2, 3A from 3, 5A from 5, and 6A from 6 (buses 2A and 3A are within the same power train). Tie breakers are provided between 480-V Switchgear buses 2A and 3A, 2A and 5A, and 3A and 6A. One emergency diesel-generator provides emergency power to bus 5A, one to 6A, and the other two buses 2A and 3A. Each emergency diesel generator will automatically start on a safety injection signal or upon under voltage on any 480-V switchgear bus. (ref. 2, 3, 4)

Critical Safety Function Status Tree (CSFST) Core Cooling-ORANGE path is entered if core exit thermocouples (TCs) are ≥ 700°F with reduced RCS Sub Cooling Margin (SCM), and any of the following (ref. 5):

- No RCPs are running and either: core exit TCs are ≥ to 700°F and RVLIS nat. circ. range is > 41%, or core exit TCs are < 700°F but RVLIS full range is ≤ 41%.
- At least one RCP is running and Reactor Vessel water level is ≤ RVLIS running range readings corresponding to Top of Active Fuel, (AF) AF.

These conditions indicate sub-cooling has been lost and that some fuel clad damage may potentially occur.

Critical Safety Function Status Tree (CSFST) Core Cooling-RED path is entered if either (ref. 6):

- Core exit TCs ≥ to 1,200°F, or
- Core exit TCs ≥ 700 (715) °F with reduced RCS sub-cooling margin, no RCPs are running, and Unit 2 Natural Circulation range RVLIS is ≤ to 41% (Unit 3 RVLIS Full Range ≤ 33%).

Either set of conditions indicates significant core exit superheating and core uncovery. This is considered a loss of the Fuel Clad barrier.

Unit 3

A single-line diagram, showing the connections of the main generator to the power system grid and to standby power source is shown on Plant Drawing 9321-F-33853 [Formerly Figure 8.2-1] (ref. 5).

Offsite (standby) power is supplied from Buchanan Substation by 138 kV and 345 kV feeders, and two underground 13.8 kV feeders. In addition, there is an Appendix R Diesel Generator at Buchanan substation connected to the 13.8 kV feeders and a 21 MW combustion turbine generator located at the Indian Point Site. The 13.8 kV feeders are connected to the 6.9 kV buses through autotransformers. The 480 volt engineered safety feature buses are connected to the 6.9 kV buses through station auxiliary transformers.

The 6900 volt system is divided into seven buses. These buses supply 6900 volt auxiliaries directly and 480 volt auxiliaries via the station service transformers. Two buses, numbers 5 and 6, are connected to the 138 kV system via bus main breakers and the Station Auxiliary Transformer. An alternate connection is available to the Appendix R Diesel Generator and/or the 13.8 kV off-site power network. Buses No. 1, 2, 3, and 4 are connected to the generator main breakers and the Unit Auxiliary Transformer. Buses No. 1 and 2 can be tied to Bus No. 5 and Buses No. 3 and 4 can be tied to Bus No. 6 via bus tie breakers to provide auxiliary power during unit down time. The 480 volt system consists of seven buses, each supplied from a 6900 volt bus via a station service transformer. Four of these Buses, No. 2A, 3A, 5A and 6A, supplied from Buses No. 2, 3, 5, and 6 respectively, comprise the safety related 480 volt system. One emergency diesel-generator set is connected to bus No. 5A, one to 6A and the third to the combination of Bus No. 2A and Bus 3A. Each diesel generator is automatically started upon under-voltage on its associated 480 volt bus. (ref. 2, 3, 4)

Critical Safety Function Status Tree (CSFST) Core Cooling-RED path is entered if either (ref. 7):

- Core exit TCs ≥ to 1,200°F, or
- Core exit TCs ≥ 700 (715) °F with reduced RCS SCM, no RCPs are running, and Unit 2 Natural Circulation range RVLIS is ≤ to 41% (Unit 3 RVLIS Full Range ≤ 33%).

Either set of conditions indicates significant core exit superheating and core uncovery. This is considered a loss of the Fuel Clad barrier.

Critical Safety Function Status Tree (CSFST) Core Cooling-ORANGE path is entered if core exit thermocouples (TCs) are ≥ 715°F with reduced RCS SCM, and any of the following (ref. 7):

- No RCPs are running and either: core exit TCs are ≥ to 715°F with RVLIS full range > 33%, or core exit TCs < 700°F but RVLIS full range ≤ 33%.
- At least one RCP is running and Reactor Vessel water level is ≤ RVLIS dynamic head range readings corresponding to TAF.

These conditions indicate sub-cooling has been lost and that some fuel clad damage may potentially occur.

IPEC Basis Reference(s):

1. Plant Drawing 250907 [Formerly UFSAR Figure 8.2-2]
2. FSAR 8.2
3. 2-ECA-0.0, "Loss of All AC Power"
4. 3-ECA-0.0, "Loss of All AC Power"
5. Plant Drawing 9321-F-33853 [Formerly Figure 8.2-1]
6. 2-F-0.2, "Core Cooling"
7. 3-F-0.2, "Core Cooling"

Category: S – System Malfunction

Subcategory: 2 – ATWS / Criticality

Initiating Condition: Inadvertent criticality

EAL:

SU2.1 Unusual Event
Unplanned sustained positive startup rate observed on nuclear instrumentation

Mode Applicability:

3 - Hot Standby, 4 - Hot Shutdown

NEI 99-01 Basis:

This EAL addresses inadvertent criticality events. This EAL indicates a potential degradation of the level of safety of the plant, warranting an Unusual Event classification. This EAL excludes inadvertent criticalities that occur during planned reactivity changes associated with reactor startups (e.g., criticality earlier than estimated).

This condition can be identified using startup rate monitors. The term "sustained" is used in order to allow exclusion of expected short term positive startup rates from planned control rod movements such as shutdown bank withdrawal. These short term positive startup rates are the result of the increase in neutron population due to subcritical multiplication.

Escalation would be by the Fission Product Barrier Table, as appropriate to the operating mode at the time of the event.

IPEC Basis:

The startup rate for each channel is indicated at the main control board in terms of decades per minute over the range of -0.5 to +5.0 decades/min.

IPEC Basis Reference(s):

1. Unit 2 FSAR Section 7.4 Nuclear Instrumentation
2. Unit 3 FSAR Section 7.4 Excore Nuclear Instrumentation

Category: S – System Malfunction

Subcategory: 2 – ATWS / Criticality

Initiating Condition: Automatic trip fails to shut down the reactor and the manual actions taken from the reactor control console are successful in shutting down the reactor

EAL:

SA2.1 Alert

Failure of an automatic trip signal to reduce power range < 5%

AND

Manual trip actions taken at the reactor control console (manual reactor trip switches) are successful

Mode Applicability:

1 - Power Operations, 2 - Startup

NEI 99-01 Basis:

The reactor should be considered shutdown when it producing less heat than the maximum decay heat load for which the safety systems are designed (5% power). This EAL equates to the criteria used to determine a valid Sub-criticality Red Path.

Manual trip actions taken at the reactor control console are any set of actions by the reactor operator(s) which causes or should cause control rods to be rapidly inserted into the core and shuts down the reactor.

This condition indicates failure of the automatic protection system to trip the reactor. This condition is more than a potential degradation of a safety system in that a front line automatic protection system did not function in response to a plant transient. Thus the plant safety has been compromised because design limits of the fuel may have been exceeded. An Alert is indicated because conditions may exist that lead to potential loss of fuel clad or RCS and because of the failure of the Reactor Protection System to automatically shut down the plant.

If manual actions taken at the reactor control console fail to shut down the reactor, the event would escalate to a Site Area Emergency.

IPEC Basis:

CSFST Sub-criticality - RED path is entered based on > 5% reactor power following a reactor trip (ref. 1).

A reactor trip is automatically initiated by the Reactor Protection System (RPS) when certain continuously monitored parameters exceed predetermined set-points.

Following a successful reactor trip, rapid insertion of the control rods occurs. Nuclear power promptly drops to a few percent of the original power level and then decays to a level some 8 decades less at a startup rate of about -1/3 DPM. The reactor power drop continues until reactor power reaches the point at which the influence of source neutrons on reactor power starts to be observable. A predictable post-trip response from an automatic reactor trip signal should therefore consist of a prompt drop in reactor power as sensed by the nuclear instrumentation and a negative startup rate as nuclear power drops into the source range.

If expected shutdown responses cannot be verified, operators perform contingency actions that manually insert control rods, opening the reactor trip and bypass breakers. Local opening of these breakers requires actions outside of the Control Room; rapid control rod insertion by these methods is therefore not considered a "successful" manual reactor trip. For purposes of emergency classification, a "successful" manual reactor trip, therefore, includes only those immediate actions taken by the reactor operator in the Control Room which are the manual reactor trip switches. These switches and controls can be rapidly manipulated from the Control Room. (ref. 2, 3)

In the event that the operator identifies a reactor trip is imminent and successfully initiates a manual reactor trip before the automatic trip set-point is reached, no declaration is required. The successful manual trip of the reactor before it reaches its automatic trip set-point or reactor trip signals caused by instrumentation channel failures do not lead to a potential fission product barrier loss. If manual reactor trip actions in the Control Room fail to reduce reactor power below the power associated with the safety system design (< 5%), the event escalates to the Site Area Emergency under EAL SS2.1.

IPEC Basis Reference(s):

1. CSFST F-0.1, Sub-criticality
2. 2-E-0 REACTOR TRIP OR SAFETY INJECTION
3. 3-E-0 REACTOR TRIP OR SAFETY INJECTION

Category: S – System Malfunction

Subcategory: 2 – ATWS / Criticality

Initiating Condition: Automatic trip fails to shut down the reactor and manual actions taken from the reactor control console are not successful in shutting down the reactor

EAL:

SS2.1 Site Area Emergency

Failure of an automatic trip signal to reduce power range < 5%

AND

Manual trip actions taken at the reactor control console (manual reactor trip switches) are **not** successful

Mode Applicability:

1 - Power Operations, 2 - Startup

NEI 99-01 Basis:

Under these conditions, the reactor is producing more heat than the maximum decay heat load for which the safety systems are designed and efforts to bring the reactor subcritical are unsuccessful. A Site Area Emergency is warranted because conditions exist that lead to imminent loss or potential loss of both fuel clad and RCS.

The reactor should be considered shutdown when it producing less heat than the maximum decay heat load for which the safety systems are designed (5% power). This EAL equates to the criteria used to determine a valid Sub-criticality Red Path.

Manual trip actions taken at the reactor control console are any set of actions by the reactor operator(s) which causes or should cause control rods to be rapidly inserted into the core and shuts down the reactor.

Manual trip actions are not considered successful if action away from the reactor control console is required to trip the reactor. This EAL is still applicable even if actions taken away from the reactor control console are successful in shutting the reactor down because the

design limits of the fuel may have been exceeded or because of the gross failure of the Reactor Protection System to shut down the plant.

Although this IC may be viewed as redundant to the Fission Product Barrier Degradation EALs, its inclusion is necessary to better assure timely recognition and emergency response.

Escalation of this event to a General Emergency would be due to a prolonged condition leading to an extreme challenge to either core-cooling or heat removal.

IPEC Basis:

CSFST Sub-criticality - RED path is entered based on > 5% reactor power following a reactor trip (ref. 1).

A reactor trip is automatically initiated by the Reactor Protection System (RPS) when certain continuously monitored parameters exceed predetermined set-points.

Following a successful reactor trip, rapid insertion of the control rods occurs. Nuclear power promptly drops to a few percent of the original power level and then decays to a level some 8 decades less at a startup rate of about -1/3 DPM. The reactor power drop continues until reactor power reaches the point at which the influence of source neutrons on reactor power starts to be observable. A predictable post-trip response from an automatic reactor trip signal should therefore consist of a prompt drop in reactor power as sensed by the nuclear instrumentation and a negative startup rate as nuclear power drops into the source range.

If expected shutdown responses cannot be verified, operators perform contingency actions that manually insert control rods, opening the reactor trip and bypass breakers. Local opening of these breakers requires actions outside of the Control Room; rapid control rod insertion by these methods is therefore not considered a "successful" manual reactor trip. For purposes of emergency classification, a "successful" manual reactor trip, therefore, includes only those immediate actions taken by the reactor operator in the Control Room which are the manual reactor trip switches. These switches and controls can be rapidly manipulated from the Control Room. (ref. 2, 3)

IPEC Basis Reference(s):

1. CSFST F-0.1, Sub-criticality
2. 2-E-0 REACTOR TRIP OR SAFETY INJECTION
3. 3-E-0 REACTOR TRIP OR SAFETY INJECTION

Attachment 1 – Emergency Action Level Bases

Category: S – System Malfunction

Subcategory: 2 – ATWS / Criticality

Initiating Condition: Automatic trip and all manual actions fail to shut down the reactor and indication of an extreme challenge to the ability to cool the core exists

EAL:

SG2.1 General Emergency

Failure of automatic **and** all manual trip signals to reduce power range < 5%

AND

Actual or imminent conditions requiring entry into **EITHER**:

RED path in F-0.2, CORE COOLING

OR

RED path in F-0.3, HEAT SINK

Mode Applicability:

1 - Power Operations, 2 - Startup

NEI 99-01 Basis:

Under these conditions, the reactor is producing more heat than the maximum decay heat load for which the safety systems are designed and efforts to bring the reactor subcritical are unsuccessful.

The reactor should be considered shutdown when it producing less heat than the maximum decay heat load for which the safety systems are designed (5% power). This EAL equates to the criteria used to determine a valid Sub-criticality Red Path.

An extreme challenge to the ability to cool the core exists when core exit temperatures are at or approaching 1200 degrees F or if reactor vessel water level is below the top of active fuel. This EAL equates to a Core Cooling RED condition combined with a Sub-criticality RED condition.

Another consideration is the inability to initially remove heat during the early stages of this sequence. If emergency feed-water flow is insufficient to remove the amount of heat required by design from at least one steam generator, an extreme challenge should be considered to exist. This condition equates to a Heat Sink RED condition combined with a Sub-criticality RED condition.

In the event either of these challenges exists at a time that the reactor has not been brought below the power associated with the safety system design a core melt sequence exists. In this situation, core degradation can occur rapidly. For this reason, the General Emergency declaration is intended to be anticipatory of the fission product barrier table declaration to permit maximum off-site intervention time.

IPEC Basis:

CSFST Sub-criticality - RED path is entered based on > 5% reactor power following a reactor trip.

CSFST Heat Sink - RED path is entered based on both:

All S/G's narrow range level < 9 (7)% [26 (17)% adv. cnmt.]

AND

Total feed-water flow to S/Gs < 400 (365) gpm

CSFST Core Cooling - RED path is entered based on either:

Core exit thermocouples > 1200° F

OR

Core exit thermocouples > 700 (715) ° F

AND

RVLIS level < 41 (33)% w/ no RCPs (TAF)

The combination of these conditions (reactor power > 5% and Heat Sink-RED or Core Cooling RED path) indicates the ultimate heat sink function is under extreme challenge. Additionally, the efforts to bring the reactor subcritical have been unsuccessful and, as a result, the reactor is producing more heat load for which the safety systems were designed. This situation could be the precursor for a core melt sequence.

A major consideration is the inability to initially remove heat during the early stages of this sequence. If emergency feed-water flow is insufficient to remove the amount of heat required by design from at least one steam generator, an extreme challenge should be considered to exist. This equates to a HEAT Sink RED condition. If CETs indicate > 1200° F or are > 700 (715) ° F with RVLIS < 41 (33) % a condition indicative of severe challenge to heat removal also exists.

In the event this challenge exists at a time when the reactor has not been brought below the power associated with safety system design power (5%) a core melt sequence is considered to exist. In this situation, core degradation can occur rapidly. For this reason, the General Emergency declaration is intended to be anticipatory of the fission product barrier matrix declaration to permit maximum offsite intervention time.

IPEC Basis Reference(s):

1. CSFST F-0.1, Sub-criticality
2. CSFST F-0.2, Core Cooling
3. CSFST F-0.3, Heat Sink
4. FR-S.1, Response to Reactor Restart/ATWS
5. FR-S.2, Response to Loss of Core Shutdown

Attachment 1 – Emergency Action Level Bases

Category: S – System Malfunction

Subcategory: 3 – Inability to Reach Shutdown Conditions

Initiating Condition: Inability to reach required shutdown within Technical Specification limits

EAL:

SU3.1 Unusual Event

Plant is **not** brought to required operating mode within Technical Specifications LCO action statement time

Mode Applicability:

1 - Power Operations, 2 - Startup, 3 – Hot Standby, 4 - Hot Shutdown

NEI 99-01 Basis:

Limiting Conditions of Operation (LCOs) require the plant to be brought to a required shutdown mode when the Technical Specification required configuration cannot be restored. Depending on the circumstances, this may or may not be an emergency or precursor to a more severe condition. In any case, the initiation of plant shutdown required by the site Technical Specifications requires a one hour report under 10 CFR 50.72 (b) Non-emergency events. The plant is within its safety envelope when being shut down within the allowable action statement time in the Technical Specifications. An immediate Unusual Event is required when the plant is not brought to the required operating mode within the allowable action statement time in the Technical Specifications. Declaration of an Unusual Event is based on the time at which the LCO-specified action statement time period elapses under the site Technical Specifications and is not related to how long a condition may have existed. Other required Technical Specification shutdowns that involve precursors to more serious events are addressed by other EALs.

IPEC Basis:

None

IPEC Basis Reference(s):

1. Technical Specifications

Attachment 1 – Emergency Action Level Bases

Category: S – System Malfunction

Subcategory: 4 – Instrumentation / Communications

Initiating Condition: Unplanned loss of safety system annunciation or indication in the control room for 15 minutes or longer

EAL:

SU4.1	**Unusual Event**
Unplanned loss of > approximately 75% of Control Room Overhead annunciators or Control Room indicators, Table S-3, associated with safety systems for ≥ 15 min. (Note 3)	

Note 3: The Emergency Director should not wait until the applicable time has elapsed, but should declare the event as soon as it is determined that the condition will likely exceed the applicable time.

Table S-3 Safety System Indicators
• Reactivity Control • RCS Inventory • Reactor Trip • Decay Heat Removal • Fission Product Barriers

Mode Applicability:

1 - Power Operations, 2 - Startup, 3 – Hot Standby, 4 - Hot Shutdown

NEI 99-01 Basis:

This EAL is intended to recognize the difficulty associated with monitoring changing plant conditions without the use of a major portion of the annunciation or indication equipment.

Recognition of the availability of computer based indication equipment is considered (e.g., SPDS, plant computer, etc.).

Quantification is arbitrary, however, it is estimated that if approximately 75% of the safety system annunciators or indicators are lost, there is an increased risk that a degraded plant

condition could go undetected. It is not intended that plant personnel perform a detailed count of the instrumentation lost but use the value as a judgment threshold for determining the severity of the plant conditions.

It is further recognized that most plant designs provide redundant safety system indication powered from separate uninterruptible power supplies. While failure of a large portion of annunciators is more likely than a failure of a large portion of indications, the concern is included in this EAL due to difficulty associated with assessment of plant conditions. The loss of specific, or several, safety system indicators should remain a function of that specific system or component operability status. This will be addressed by the specific Technical Specification. The initiation of a Technical Specification imposed plant shutdown related to the instrument loss will be reported via 10CFR50.72. If the shutdown is not in compliance with the Technical Specification action, the Unusual Event is based on SU3.1 "Inability to Reach Required Shutdown Within Technical Specification Limits."

Annunciators or indicators associated with safety systems include those identified in the Abnormal Operating Procedures, in the Emergency Operating Procedures, and in other EALs (e.g., area, process, and/or effluent rad monitors, etc.).

Fifteen minutes was selected as a threshold to exclude transient or momentary power losses.

Due to the limited number of safety systems in operation during cold shutdown, refueling, and defueled modes, no applicability is indicated during these modes of operation.

This Unusual Event will be escalated to an Alert based on a concurrent loss of compensatory indications or if a significant transient is in progress during the loss of annunciation or indication.

IPEC Basis:

Computer-based monitoring capability include PICS, CMFS and QSPDS.

IPEC Basis Reference(s):

None

Category: S – System Malfunction

Subcategory: 4 – Instrumentation / Communications

Initiating Condition: Loss of **all** onsite or offsite communications capabilities

EAL:

SU4.2 Unusual Event

Loss of **all** Table S-4 onsite (internal) communications capability affecting the ability to perform routine operations

OR

Loss of **all** Table S-4 offsite (external) communications capability affecting the ability to perform offsite notifications

Table S-4 Communications Systems

System	Onsite (internal)	Offsite (external)
Plant Telephone System	X	X
Plant Radio System	X	
Page/Party System	X	
Emergency Notification System		X

Mode Applicability:

1 - Power Operations, 2 - Startup, 3 – Hot Standby, 4 - Hot Shutdown

NEI 99-01 Basis:

The purpose of this EAL is to recognize a loss of communications capability that either defeats the plant operations staff ability to perform routine tasks necessary for plant operations or the ability to communicate issues with off-site authorities.

The loss of off-site communications ability is expected to be significantly more comprehensive than the condition addressed by 10 CFR 50.72.

The availability of one method of ordinary off-site communications is sufficient to inform federal, state, and local authorities of plant problems. This EAL is intended to be used only when extraordinary means (e.g., relaying of information from non-routine radio transmissions, individuals being sent to off-site locations, etc.) are being used to make communications possible.

The Table S-4 list for on-site communications loss encompasses the loss of all means of communications (e.g., commercial telephones, sound powered phone systems, page party system (Gaitronics) and radios / walkie-talkies) routinely used for operations.

The Table S-4 list for off-site communications loss encompasses the loss of all means of communications with off-site authorities. This includes the ENS, commercial telephone lines, telecopy transmissions, and dedicated phone systems that are routinely used for offsite emergency notifications.

IPEC Basis:

Unit 2

Routine Unit 2 plant communications are conducted via telephone, radio, and Public Address (paging) systems.

The plant telephone and radio communications systems include two (2) PBX electronic switches, backup phone lines and a UHF radio system. A third PBX electronic switch is located at the EOF.

The public address system for Indian Point Unit 2 consists of "Page" and "Party" communications, which are common to both the primary (nuclear) and secondary (conventional) portions of Units 1 and 2. The “Page” and “Party” communications are also monitored at a speaker panel located in the CCR.

An in-house radio system provides communications between the Technical Support Center, the I&C office, and in-plant personnel.

Unit 3

The Unit 3 communications system was designed to ensure the reliable, timely flow of information and action directives necessary during normal operation, and particularly for the mitigation of emergencies.

The Public Address (PA) System has two subsystems: the Plant Party Paging and the Site PA System. The system consists of three channels. Two of these channels are common to both the primary (nuclear) and secondary (conventional) portions of the plant. The third line provides an additional channel in the primary portion of the Unit 3 plant. A "Page" handset is used for page purposes only and calls originating from this handset can be heard on all loudspeakers in the primary and secondary portions of the facility. The remaining two "Page-Party" handsets are used for loudspeakers paging and party-line conversations, as selected by the control room operator.

This EAL is the hot condition equivalent of the cold condition EAL CU4.1.

IPEC Basis Reference(s):

1. Unit 2 FSAR Section 7.7.4 Communications
2. Unit 3 FSAR Section 9.6.5 Plant Communications Systems

Attachment 1 – Emergency Action Level Bases

Category: S – System Malfunction

Subcategory: 4 – Instrumentation / Communications

Initiating Condition: Unplanned loss of safety system annunciation or indication in the control room with either (1) a significant transient in progress, or (2) compensatory indicators unavailable

EAL:

SA4.1 Alert

Unplanned loss of > approximately 75% of Control Room Overhead annunciators or Control Room indicators, Table S-3, associated with safety systems for ≥ 15 min. (Note 3)

AND EITHER:

Any significant transient is in progress, Table S-2

OR

Compensatory indications are unavailable

Note 3: The Emergency Director should not wait until the applicable time has elapsed, but should declare the event as soon as it is determined that the condition will likely exceed the applicable time.

Table S-2 Significant Transient

- Automatic turbine runback > 25% thermal reactor power
- Electrical load rejection > 25% full electrical load
- Reactor trip
- Safety injection activation
- Thermal power oscillations of > 10%

Table S-3 Safety System Indicators

- Reactivity Control
- RCS Inventory
- Reactor Trip
- Decay Heat Removal
- Fission Product Barriers

Mode Applicability:

1 - Power Operations, 2 - Startup, 3 – Hot Standby, 4 - Hot Shutdown

NEI 99-01 Basis:

This EAL is intended to recognize the difficulty associated with monitoring changing plant conditions without the use of a major portion of the annunciation or indication equipment during a significant transient.

Recognition of the availability of computer based indication equipment is considered (e.g., PICS, CMFS or QSPDS).

Quantification is arbitrary, however, it is estimated that if approximately 75% of the safety system annunciators or indicators are lost, there is an increased risk that a degraded plant condition could go undetected. It is not intended that plant personnel perform a detailed count of the instrumentation lost but use the value as a judgment threshold for determining the severity of the plant conditions. It is also not intended that the Shift Manager be tasked with making a judgment decision as to whether additional personnel are required to provide increased monitoring of system operation.

It is further recognized that most plant designs provide redundant safety system indication powered from separate uninterruptible power supplies. While failure of a large portion of annunciators is more likely than a failure of a large portion of indications, the concern is included in this EAL due to difficulty associated with assessment of plant conditions. The loss of specific, or several, safety system indicators should remain a function of that specific system or component operability status. This will be addressed by the specific Technical Specification. The initiation of a Technical Specification imposed plant shutdown related to the instrument loss will be reported via 10 CFR 50.72. If the shutdown is not in compliance with the Technical Specification action, the Unusual Event is based on SU3.1 "Plant is not brought to required operating mode within Technical Specifications LCO action statement time."

The annunciators or indicators for this EAL include those identified in the Abnormal Operating Procedures, in the Emergency Operating Procedures, and in other EALs (e.g., area, process, and/or effluent rad monitors, etc.).

"Compensatory indications" in this context includes computer based information such as PICS, CMFS or QSPDS. If both a major portion of the annunciation system and all computer monitoring are unavailable, the Alert is required.

Due to the limited number of safety systems in operation during cold shutdown, refueling and defueled modes, no EAL is indicated during those modes of operation.

Fifteen minutes was selected as a threshold to exclude transient or momentary power losses.

This Alert will be escalated to a Site Area Emergency if the operating crew cannot monitor the transient in progress due to a concurrent loss of compensatory indications with a significant transient in progress during the loss of annunciation or indication.

IPEC Basis:

Significant transients are listed in Table S-2 and include response to automatic or manually initiated functions such as trips, runbacks involving greater than 25% thermal power change, electrical load rejections of greater than 25% full electrical load, safety injections, or thermal power oscillations of 10% or greater.

IPEC Basis Reference(s):

None

Attachment 1 – Emergency Action Level Bases

Category: S – System Malfunction

Subcategory: 4 – Instrumentation / Communications

Initiating Condition: Inability to monitor a significant transient in progress

EAL:

SS4.1 Site Area Emergency

Loss of > approximately 75% of Control Room Overhead annunciators or Control Room indicators, Table S-3, associated with safety systems

AND

Any significant transient is in progress, Table S-2

AND

Compensatory indications are unavailable

Table S-2 Significant Transient

- Automatic turbine runback > 25% thermal reactor power
- Electrical load rejection > 25% full electrical load
- Reactor trip
- Safety injection activation
- Thermal power oscillations of > 10%

Table S-3 Safety System Indicators

- Reactivity Control
- RCS Inventory
- Reactor Trip
- Decay Heat Removal
- Fission Product Barriers

Mode Applicability:

1 - Power Operations, 2 - Startup, 3 – Hot Standby, 4 - Hot Shutdown

NEI 99-01 Basis:

This EAL is intended to recognize the threat to plant safety associated with the complete loss of capability of the control room staff to monitor plant response to a significant transient.

Quantification is arbitrary, however, it is estimated that if approximately 75% of the safety system annunciators or indicators are lost, there is an increased risk that a degraded plant condition could go undetected. It is not intended that plant personnel perform a detailed count of the instrumentation lost but use the value as a judgment threshold for determining the severity of the plant conditions. It is also not intended that the Shift Manager be tasked with making a judgment decision as to whether additional personnel are required to provide increased monitoring of system operation.

It is further recognized that most plant designs provide redundant safety system indication powered from separate uninterruptible power supplies. While failure of a large portion of annunciators is more likely than a failure of a large portion of indications, the concern is included in this EAL due to difficulty associated with assessment of plant conditions. The loss of specific, or several, safety system indicators should remain a function of that specific system or component operability status. This is addressed by the specific Technical Specification. The initiation of a Technical Specification imposed plant shutdown related to the instrument loss will be reported via 10 CFR 50.72. If the shutdown is not in compliance with the Technical Specification action, the Unusual Event is based on SU3.1 "Inability to Reach Required Shutdown Within Technical Specification Limits."

A Site Area Emergency is considered to exist if the control room staff cannot monitor safety functions needed for protection of the public while a significant transient is in progress.

Annunciators for this EAL are limited to include those identified in the Abnormal Operating Procedures, in the Emergency Operating Procedures, and in other EALs (.g., area, process, and/or effluent rad monitors, etc.)]

Indications needed to monitor safety functions necessary for protection of the public must include control room indications, computer generated indications and dedicated annunciation capability.

Indications should be those used to determine such functions as the ability to shut down the reactor, maintain the core cooled, to maintain the reactor coolant system intact, maintain the spent fuel cooled, and to maintain containment intact.

"Compensatory indications" in this context includes computer based information such as PICS, CMFS or QSPDS.

Fifteen minutes was selected as a threshold to exclude transient or momentary power losses.

Due to the limited number of safety systems in operation during cold shutdown, refueling and defueled modes, no EAL is indicated during those modes of operation.

IPEC Basis:

Significant transients are listed in Table S-2 and include response to automatic or manually initiated functions such as trips, runbacks involving greater than 25% thermal power change, electrical load rejections of greater than 25% full electrical load, safety injections, or thermal power oscillations of 10% or greater.

IPEC Basis Reference(s):

None

Category: S – System Malfunction

Subcategory: 5 – Fuel Clad Degradation

Initiating Condition: Fuel clad degradation

EAL:

SU5.1	**Unusual Event**
[Unit 3]: 1(2)RM063A/B Gross Failed Fuel Detector High alarm (> 50 μCi/ml)	

Mode Applicability:

1 - Power Operations, 2 - Startup, 3 – Hot Standby, 4 - Hot Shutdown

NEI 99-01 Basis:

This EAL is included because it is a precursor of more serious conditions and, as result, is considered to be a potential degradation of the level of safety of the plant.

Escalation of this EAL to the Alert level is via the Fission Product Barriers.

This threshold addresses gross failed fuel detector radiation monitor readings that provide indication of a degradation of fuel clad integrity.

IPEC Basis:

Unit 2

Unit 2 does not have installed radiation monitoring capable of detecting fuel damage equivalent to Technical Specification coolant activity. Unit 2 would declare the Unusual event based on EAL SU5.2 due to a coolant sample exceeding Technical Specification limit of > 60 μCi/gm I-131 dose equivalent.

Unit 3

The Unit 3 1(2)RM063 Gross Failed Fuel Detector high alarm (Radiation Monitoring Control Cabinet - R63A/B GFFD) provides indication of fuel damage > 50 μCi/cc.

IPEC Basis Reference(s):

1. 3-AOP-HIACT-1 RCS High Activity
2. 3-ARP-040 R63A/B GFFD
3. 3-SOP-RM-10 Radiation Monitor Set point Control

Attachment 1 – Emergency Action Level Bases

Category: S – System Malfunction

Subcategory: 5 – Fuel Clad Degradation

Initiating Condition: Fuel clad degradation

EAL:

SU5.2	**Unusual Event**
	Coolant sample activity:
	>60 µCi/gm I-131 dose equivalent

Mode Applicability:

1 - Power Operations, 2 - Startup, 3 – Hot Standby, 4 - Hot Shutdown

NEI 99-01 Basis:

This EAL is included because it is a precursor of more serious conditions and, as result, is considered to be a potential degradation of the level of safety of the plant.

Escalation of this EAL to the Alert level is via the Fission Product Barriers.

This threshold addresses coolant samples exceeding coolant technical specifications for transient iodine spiking limits.

IPEC Basis:

Elevated reactor coolant activity represents a potential degradation in the level of safety of the plant and a potential precursor of more serious problems.

This EAL addresses reactor coolant samples exceeding Technical Specification LCO limit 3.4.16 A.1, which is applicable in Hot operating modes (ref. 1). The iodine spike limit of 60.0 µCi/gm I-131 dose equivalent provides an iodine peak or spike limit for the reactor coolant concentration to assure that the radiological consequence of a postulated Steam Line Break or SGTR are within 10CFR50.67 dose guidelines (ref. 1).

10CFR50.67 dose guidelines (ref. 2)

IPEC Basis Reference(s):

1. Unit 2 Technical Specifications Section 3.4.16 A.1
2. Unit 3 Technical Specifications Section 3.4.16 A.1 (Revised)

Attachment 1 – Emergency Action Level Bases

Category: S – System Malfunction

Subcategory: 6 – RCS Leakage

Initiating Condition: RCS leakage

EAL:

SU6.1	**Unusual Event**
Unidentified or pressure boundary leakage > 10 gpm	
OR	
Identified leakage > 25 gpm	

Mode Applicability:

1 - Power Operations, 2 - Startup, 3 – Hot Standby, 4 - Hot Shutdown

NEI 99-01 Basis:

The conditions of this EAL may be a precursor of more serious conditions and, as result, is considered to be a potential degradation of the level of safety of the plant. The 10 gpm value for the unidentified and pressure boundary leakage was selected as it is observable with normal control room indications. Lesser values must generally be determined through time-consuming surveillance tests (e.g., mass balances).

Relief valve normal operation should be excluded from this EAL. However, a relief valve that operates and fails to close per design should be considered applicable to this EAL if the relief valve cannot be isolated.

The threshold for identified leakage is set at a higher value due to the lesser significance of identified leakage in comparison to unidentified or pressure boundary leakage. In either case, escalation of this EAL to the Alert level is via Fission Product Barrier Degradation EALs.

IPEC Basis:

RCS Leak Rate Evaluations are routinely performed once a week per 0-SOP-LEAKRATE-1 (ref. 5). The Shift Manager may request performance of additional RCS Leak Rate Evaluations for reasons other than unidentified leakage increase. Leak rate evaluation can be performed by computer or manually if the computer is not available.

Steam Generator tube leakage is considered identified leakage.

Charging Pump leakage is considered separately as Non-RCPB Leakage and therefore is removed from the total identified leakage components. (ref. 3, 4)

IPEC Basis Reference(s):

1. Unit 2 Technical Specification Section 3.4.13 RCS Operational Leakage
2. Unit 3 Technical Specification Section 3.4.13 RCS Operational Leakage
3. 2-AOP-LEAK-1 Sudden Increase in Reactor Coolant System Leakage
4. 3-AOP-LEAK-1 Sudden Increase in Reactor Coolant System Leakage
5. 0-SOP-LEAKRATE-1 RCS Leak-rate Surveillance, Evaluation and Leak Identification

Attachment 1 – Emergency Action Level Bases

Category: S – System Malfunction

Subcategory: 7 – Loss of DC Power

Initiating Condition: Loss of **all** vital DC power for 15 minutes or longer

EAL:

SS7.1	**Site Area Emergency**
< 105 VDC bus voltage indications on **all** safety-related DC buses for ≥ 15 min. (Note 3)	

Note 3: The Emergency Director should not wait until the applicable time has elapsed, but should declare the event as soon as it is determined that the condition will likely exceed the applicable time.

Mode Applicability:

1 - Power Operations, 2 - Startup, 3 – Hot Standby, 4 - Hot Shutdown

NEI 99-01 Basis:

Loss of all DC power compromises ability to monitor and control plant safety functions. Prolonged loss of all DC power will cause core uncovering and loss of containment integrity when there is significant decay heat and sensible heat in the reactor system.

Fifteen minutes was selected as a threshold to exclude transient or momentary power losses.

Escalation to a General Emergency would occur by Abnormal Rad Levels/Radiological Effluent, Fission Product Barrier Degradation.

IPEC Basis:

For Indian Point Unit 2, each 480V bus has an automatic transfer switch to provide alternate DC power supplies to the 480V buses. This DC power is also supplied to 480V motor control centers.

The bus voltage is based on the minimum bus voltage necessary for the operation of safety related equipment. This voltage value incorporates a margin of at least 15 minutes of operation before the onset of inability to operate loads.

This EAL is the hot condition equivalent of the cold condition loss of DC power EAL CU6.1.

IPEC Basis Reference(s):

1. 2-AOP-DC Loss Of A Battery Charger Or Any 125V DC Panel
2. 2-PT-R076A Station Battery 21 Load Test
3. 2-PT-R076C Station Battery 23 Load Test
4. 3-AOP-DC-1 Loss Of A 125V DC Panel
5. SOP-EL-003, Battery Charger and 125 Volt DC System Operations
6. 3PT-R156A Station Battery 31 Load Profile Service Test

Category E – ISFSI

EAL Group: ANY (The EAL in this category is applicable to any plant condition, hot or cold.)

An Independent Spent Fuel Storage Installation (ISFSI) is a complex that is designed and constructed for the interim storage of spent nuclear fuel and other radioactive materials associated with spent fuel storage. A significant amount of the radioactive material contained within a cask must escape its packaging and enter the biosphere for there to be a significant environmental effect resulting from an accident involving the dry storage of spent nuclear fuel. Formal offsite planning is not required because the postulated worst-case accident involving an ISFSI has insignificant consequences to the public health and safety.

An Unusual Event is declared on the basis of the occurrence of an event of sufficient magnitude that a loaded cask *confinement boundary* is damaged or violated. This includes classification based on a loaded fuel storage cask *confinement boundary* loss leading to the degradation of the fuel during storage or posing an operational safety problem with respect to its removal from storage.

Security events affecting the ISFSI are classifiable under security based EALs in the Hazards Category.

Minor surface damage that does not affect storage cask boundary is excluded from the scope of these EALs.

Attachment 1 – Emergency Action Level Bases

Category: E – ISFSI

Subcategory: None

Initiating Condition: Damage to a loaded cask confinement boundary

EAL:

EU1.1	**Unusual Event**
Damage to a loaded cask confinement boundary	

Mode Applicability:

All

NEI 99-01 Basis:

An Unusual Event in this EAL is categorized on the basis of the occurrence of an event of sufficient magnitude that a loaded cask confinement boundary is damaged or violated. This includes classification based on a loaded fuel storage cask confinement boundary loss leading to the degradation of the fuel during storage or posing an operational safety problem with respect to its removal from storage.

IPEC Basis:

Confinement Boundary means the outline formed by either: (1) the sealed, cylindrical enclosure of the Multi-Purpose Canister (MPC) shell welded to a solid baseplate, a lid welded around the top circumference of the shell wall, the port cover plates welded to the lid, and the closure ring welded to the lid and MPC shell providing the redundant sealing; or (2) the sealed, cylindrical enclosure of the Shielded Transfer Canister (STC) inner shell welded to a solid base plate and an upper flange, with the upper flange bolted to a solid closure lid with the lid to flange interface having a double elastomeric o-ring seal, and with the lid having vent and drain ports with bolted solid cover plates with each cover plate having an elastomeric o-ring seal.

Minor surface damage that does not affect storage cask boundary is excluded from the scope of this EAL.

IPEC Basis Reference(s):

1. Holtec International FSAR for the HI-STORM 100 Cask System

Category F – Fission Product Barrier Degradation

EAL Group: Hot Conditions (RCS temperature > 200 °F); EALs in this category are applicable only in one or more hot operating modes including Power Operations, Startup, Hot Standby and Hot Shutdown.

EALs in this category represent threats to the defense in depth design concept that precludes the release of highly radioactive fission products to the environment. This concept relies on multiple physical barriers any one of which, if maintained intact, precludes the release of significant amounts of radioactive fission products to the environment. The primary fission product barriers are:

A. Reactor Fuel Clad (FC): The zirconium tubes which house the ceramic uranium oxide pellets along with the end plugs which are welded into each end of the fuel rods comprise the fuel clad.

B. Reactor Coolant System (RCS): The Reactor Vessel shell, vessel head, vessel nozzles and penetrations and all primary systems directly connected to the Reactor Vessel up to the first isolation valve comprise the RCS.

C. Containment (CNMT): The vapor Containment structure and all isolation valves required to maintain Containment integrity under accident conditions comprise the Containment barrier.

The EALs in this category require evaluation of the loss and potential loss thresholds listed in the fission product barrier matrix of Table F-1 (Attachment 2). "Loss" and "Potential Loss" signify the relative damage and threat of damage to the barrier. "Loss" means the barrier no longer assures containment of radioactive materials. "Potential Loss" means integrity of the barrier is threatened and could be lost if conditions continue to degrade. The number of barriers that are lost or potentially lost and the following criteria determine the appropriate emergency classification level:

Unusual Event:
Any loss or any potential loss of Primary Containment

Alert:
Any loss or any potential loss of either Fuel Clad or RCS

Site Area Emergency:
Loss or potential loss of any two barriers

General Emergency:
Loss of any two barriers and loss or potential loss of third barrier

The logic used for emergency classification based on fission product barrier monitoring should reflect the following considerations:

- The Fuel Clad barrier and the RCS barrier are weighted more heavily than the Containment barrier. UE EALs associated with RCS and Fuel Clad barriers are addressed under System Malfunction EALs.
- At the Site Area Emergency level, there must be some ability to dynamically assess how far present conditions are from the threshold for a General Emergency. For example, if Fuel Clad and RCS barrier "loss" EALs existed, that, in addition to offsite dose assessments, would require continual assessments of radioactive inventory and containment integrity. Alternatively, if both Fuel Clad and RCS barrier "Potential Loss" EALs existed, the Emergency Director would have more assurance that there was **no** immediate need to escalate to a General Emergency.
- The ability to escalate to higher emergency classes as an event deteriorates must be maintained. For example, RCS leakage steadily increasing would represent an increasing risk to public health and safety.

Fission Product Barrier EALs must be capable of addressing event dynamics. Imminent Loss or Potential Loss should result in a classification as if the affected threshold(s) are already exceeded, particularly for the higher emergency classes.

Determine which combination of the three barriers are lost or have a potential loss (Figure F-1) and use FU1.1, FA1.1, FS1.1 and FG1.1 to classify the event. Also an event for multiple

events could occur which result in the conclusion that exceeding the loss or potential loss thresholds is imminent. In this imminent loss situation use judgment and classify as if the thresholds are exceeded.

Figure F-1

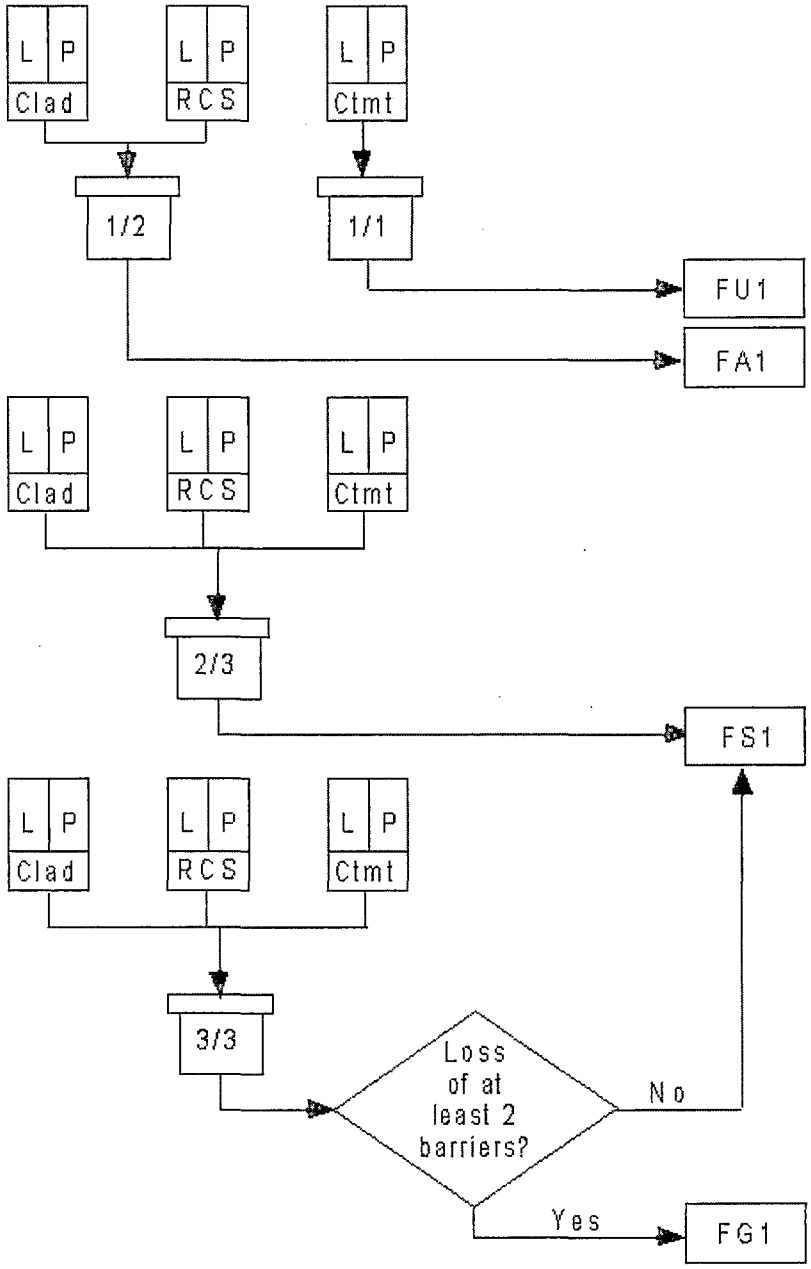
L P
Clad
L P
RCS
L P
Ctmt
1/2
1/1
FU1
FA1
L P
Clad
L P
RCS
L P
Ctmt
2/3
FS1
L P
Clad
L P
RCS
L P
Ctmt
3/3
Loss of at least 2 barriers?
No
Yes
FG1

Category: Fission Product Barrier Degradation

Subcategory: N/A

Initiating Condition: **Any** loss or **any** potential loss of Containment

EAL:

FU1.1	**Unusual Event**
Any loss or **any** potential loss of Containment (Table F-1)	

Mode Applicability:

1 - Power Operations, 2 – Startup, 3 - Hot Standby, 4 - Hot Shutdown

NEI 99-01 Basis:

None

IPEC Basis:

Fuel Clad, RCS and Containment comprise the fission product barriers. Table F-1 (Attachment 2) lists the fission product barrier thresholds, bases and references.

Fuel Clad and RCS barriers are weighted more heavily than the Containment barrier. Unlike the Fuel Clad and RCS barriers, the loss of either of which results in an Alert (EAL FA1.1), loss of the Containment barrier in and of itself does not result in the relocation of radioactive materials or the potential for degradation of core cooling capability. However, loss or potential loss of the Containment barrier in combination with the loss or potential loss of either the Fuel Clad or RCS barrier results in declaration of a Site Area Emergency under EAL FS1.1.

IPEC Basis Reference(s):

None

Attachment 1 – Emergency Action Level Bases

Category: Fission Product Barrier Degradation

Subcategory: N/A

Initiating Condition: **Any** loss or **any** potential loss of either Fuel Clad or RCS

EAL:

FA1.1	**Alert**
Any loss or **any** potential loss of either Fuel Clad or RCS (Table F-1)	

Mode Applicability:

1 - Power Operations, 2 – Startup, 3 - Hot Standby, 4 - Hot Shutdown

NEI 99-01 Basis:

None

IPEC Basis:

Fuel Clad, RCS and Containment comprise the fission product barriers. Table F-1 (Attachment 2) lists the fission product barrier thresholds, bases and references.

At the Alert classification level, Fuel Clad and RCS barriers are weighted more heavily than the Containment barrier. Unlike the Containment barrier, loss or potential loss of either the Fuel Clad or RCS barrier may result in the relocation of radioactive materials or degradation of core cooling capability. Note that the loss or potential loss of Containment barrier in combination with loss or potential loss of either Fuel Clad or RCS barrier results in declaration of a Site Area Emergency under EAL FS1.

IPEC Basis Reference(s):

None

Category: Fission Product Barrier Degradation

Subcategory: N/A

Initiating Condition: Loss or potential loss of **any** two barriers

EAL:

FS1.1	**Site Area Emergency**
Loss or potential loss of **any** two barriers (Table F-1)	

Mode Applicability:

1 - Power Operations, 2 – Startup, 3 - Hot Standby, 4 - Hot Shutdown

NEI 99-01 Basis:

None

IPEC Basis:

Fuel Clad, RCS and Containment comprise the fission product barriers. Table F-1 (Attachment 2) lists the fission product barrier thresholds, bases and references.

At the Site Area Emergency classification level, each barrier is weighted equally. A Site Area Emergency is therefore appropriate for any combination of the following conditions:

- One barrier loss and a second barrier loss (i.e., loss - loss)
- One barrier loss and a second barrier potential loss (i.e., loss - potential loss)
- One barrier potential loss and a second barrier potential loss (i.e., potential loss - potential loss)

At the Site Area Emergency classification level, the ability to dynamically assess the proximity of present conditions with respect to the threshold for a General Emergency is important. For example, the existence of Fuel Clad and RCS Barrier loss thresholds in addition to offsite dose assessments would require continual assessments of radioactive inventory and Containment integrity in anticipation of reaching a General Emergency classification. Alternatively, if both Fuel Clad and RCS potential loss thresholds existed, the Emergency Director would have greater assurance that escalation to a General Emergency is less imminent.

IPEC Basis Reference(s):

None

Attachment 1 – Emergency Action Level Bases

Category: Fission Product Barrier Degradation

Subcategory: N/A

Initiating Condition: Loss of **any** two barriers and loss or potential loss of third barrier

EAL:

FG1.1 General Emergency
Loss of **any** two barriers
AND
Loss or potential loss of third barrier (Table F-1)

Mode Applicability:

1 - Power Operations, 2 – Startup, 3 - Hot Standby, 4 - Hot Shutdown

NEI 99-01 Basis:

None

IPEC Basis:

Fuel Clad, RCS and Containment comprise the fission product barriers. Table F-1 (Attachment 2) lists the fission product barrier thresholds, bases and references.

At the General Emergency classification level each barrier is weighted equally. A General Emergency is therefore appropriate for any combination of the following conditions:

- Loss of Fuel Clad, RCS and Containment barriers
- Loss of Fuel Clad and RCS barriers with potential loss of Containment barrier
- Loss of RCS and Containment barriers with potential loss of Fuel Clad barrier
- Loss of Fuel Clad and Containment barriers with potential loss of RCS barrier

IPEC Basis Reference(s):

None

Introduction

Table F-1 lists the threshold conditions that define the Loss and Potential Loss of the three fission product barriers (Fuel Clad, Reactor Coolant System, and Containment). The table is structured so that each of the three barriers occupies adjacent columns. Each fission product barrier column is further divided into two columns; one for Loss thresholds and one for Potential Loss thresholds.

The first column of the table (to the left of the Fuel Clad Loss column) lists the categories (types) of fission product barrier thresholds. The fission product barrier categories are:

A. CSFST

B. Core Exit T/Cs

C. Radiation

D. Inventory

E. Other

F. Judgment

Each category occupies a row in Table F-1 thus forming a matrix defined by the categories. The intersection of each row with each Loss/Potential Loss column forms a cell in which one or more fission product barrier thresholds appear. If NEI 99-01 does not define a threshold for a barrier Loss/Potential Loss, the word "None" is entered in the cell.

Thresholds are assigned sequential numbers within each Loss and Potential Loss column beginning with number one. In this manner, a threshold can be identified by its category title and number. For example, the first Fuel Clad barrier Loss in Category A would be assigned "FC Loss A.1," the third Containment barrier Potential Loss would be assigned "CMNT P-Loss B.3," etc.

If a cell in Table F-1 contains more than one numbered threshold, each of the numbered thresholds, if exceeded, signifies a Loss or Potential Loss of the barrier. It is not necessary to exceed all of the thresholds in a category before declaring a barrier Loss/Potential Loss.

Subdivision of Table F-1 by category facilitates association of plant conditions to the applicable fission product barrier Loss and Potential Loss thresholds. This structure promotes a systematic approach to assessing the classification status of the fission product barriers.

When equipped with knowledge of plant conditions related to the fission product barriers, the EAL-user first scans down the category column of Table F-1, locates the likely category and then reads across the fission product barrier Loss and Potential Loss thresholds in that category to determine if a threshold has been exceeded. If a threshold has not been exceeded, the EAL-user proceeds to the next likely category and continues review of the thresholds in the new category

If the EAL-user determines that any threshold has been exceeded, by definition, the barrier is lost or potentially lost – even if multiple thresholds in the same barrier column are exceeded, only that one barrier is lost or potentially lost. The EAL-user must examine each of the three fission product barriers to determine if other barrier thresholds in the category are lost or potentially lost. For example, if containment radiation is sufficiently high, a Loss of the Fuel Clad and RCS barriers and a Potential Loss of the Containment barrier can occur. Barrier Losses and Potential Losses are then applied to the algorithms given in EALs FG1.1, FS1.1, FA1.1 and FU1.1 to determine the appropriate emergency classification.

In the remainder of this Attachment, the Fuel Clad barrier threshold bases appear first, followed by the RCS barrier and finally the Containment barrier threshold bases. In each barrier, the bases are given according category Loss followed by category Potential Loss beginning with Category A, then B,...,E.

Attachment 2 – Fission Product Barrier Loss/Potential Loss Matrix and Bases

Table F-1 Fission Product Barrier Matrix

	Fuel Cladding Barrier (FC)		Reactor Coolant System Barrier (RCS)		Containment Barri	
	☐ Loss	☐ Potential Loss	☐ Loss	☐ Potential Loss	☐ Loss	☐
A.CSFST	☐ 1. Core-Cooling RED entry conditions met	☐ 1. Core Cooling - ORANGE entry conditions met OR Heat Sink - RED entry conditions met and heat sink is required		☐ 1. Integrity - RED entry conditions met OR Heat Sink - RED entry conditions met and heat sink is required		☐ 1.
B.Core Exit TCs	☐ 2. Core exit TCs > 1,200°F	☐ 2. Core exit TCs [Unit 2] > 700°F [Unit 3] > 715°F				☐ 2. ☐ 3.
C.Radiation	☐ 3. Containment radiation monitor R-25 or R-26 > 17 R/hr		☐ 1. [Unit 2] R-41 > 1.2E-5 µCi/cc or R-42 > 1.0E-2 µCi/cc [Unit 3] R-11 > 1.2E-5 µCi/cc or R-12 > 5.0E-2 µCi/cc			☐ 4.
D.Inventory		☐ 3. RVLIS [Unit 2] < 41% [Unit 3] < 33% with no RCPs running	☐ 2. RCS leak rate resulting in a loss of RCS subcooling (< Table F-2) ☐ 3. Ruptured SG results in an ECCS (SI) actuation	☐ 2. RCS leak rate indicated greater than 87 gpm	☐ 1. A Containment pressure rise followed by a rapid unexplained drop in Containment pressure ☐ 2. Containment pressure or sump level response not consistent with LOCA conditions ☐ 3. Ruptured SG faulted outside of containment ☐ 4. Primary-to-secondary leak rate > 10 gpm AND Unisolable steam release from affected SG to the environment	☐ 5. ☐ 6. ☐ 7.
E.Other	☐ 4. Primary coolant activity > 300 µCi/gm I-131 dose equivalent				☐ 5. Inability to isolate all valves in any one line AND Direct downstream pathway to the environment exists after containment isolation signal	
F. Judgment	☐ 5. **Any** condition in the opinion of the Emergency Director that indicates loss of the Fuel Clad barrier	☐ 4. **Any** condition in the opinion of the Emergency Director that indicates potential loss of the Fuel Clad barrier	☐ 4. **Any** condition in the opinion of the Emergency Director that indicates loss of the RCS barrier	☐ 3. **Any** condition in the opinion of the Emergency Director that indicates potential loss of the RCS barrier	☐ 6. **Any** condition in the opinion of the Emergency Director that indicates loss of the Containment barrier	☐ 8.

Barrier: Fuel Clad

Category: A. CSFST

Degradation Threat: Loss

Threshold:

1. Core Cooling - RED entry conditions met

NEI 99-01 Basis:

Core Cooling - RED indicates significant superheating and core uncovery and is considered to indicate loss of the Fuel Clad Barrier.

IPEC Basis:

Critical Safety Function Status Tree (CSFST) Core Cooling-RED path is entered if either (ref. 1, 2):

- Core exit TCs ≥ to 1,200°F, or
- Core exit TCs ≥ 700 (715) °F with reduced RCS sub cooling margin, no RCPs are running, and Unit 2 Natural Circulation range RVLIS is ≤ to 41% (Unit 3 RVLIS Full Range ≤ 33%).

Either set of conditions indicates significant core exit superheating and core uncovery. This is considered a loss of the Fuel Clad barrier.

IPEC Basis Reference(s):

1. 2-F-0.2 Core Cooling
2. 3-F-0.2 Core Cooling

Barrier: Fuel Clad

Category: A. CSFST

Degradation Threat: Potential Loss

Threshold:

1. Core Cooling - ORANGE entry conditions met

   OR

   Heat Sink - RED entry conditions met and heat sink is required

NEI 99-01 Basis:

Core Cooling - ORANGE indicates sub-cooling has been lost and that some clad damage may occur.

Heat Sink - RED when heat sink is required indicates the ultimate heat sink function is under extreme challenge.

IPEC Basis:

Unit 2

Critical Safety Function Status Tree (CSFST) Core Cooling-ORANGE path is entered if core exit thermocouples (TCs) are ≥ 700°F with reduced RCS SCM, and any of the following (ref. 1):

- No RCPs are running and either: core exit TCs are ≥ to 700°F and RVLIS nat. circ. range is > 41%, or core exit TCs are < 700°F but RVLIS full range is ≤ 41%.
- At least one RCP is running and Reactor Vessel water level is ≤ RVLIS running range readings corresponding to TAF.

These conditions indicate sub-cooling has been lost and that some fuel clad damage may potentially occur.

Indication that heat removal is extremely challenged is manifested by entry conditions to CSFST Heat Sink-RED path (ref. 3). CSFST Heat Sink-RED path is entered if all SG NR LVLs are ≤ 10% [27%] and total FW flow is ≤ to 400 gpm. The combination of these conditions when heat sink is required indicates the ultimate heat sink function is under extreme challenge. This condition addresses loss of functions required for hot shutdown with the reactor at pressure and temperature and thus is a challenge of the Fuel Clad barrier.

Unit 3

Critical Safety Function Status Tree (CSFST) Core Cooling-ORANGE path is entered if core exit thermocouples (TCs) are ≥ 715°F with reduced RCS SCM, and any of the following (ref. 2):

- No RCPs are running and either: core exit TCs are ≥ to 715°F with RVLIS full range > 33%, or core exit TCs < 700°F but RVLIS full range ≤ 33%.
- At least one RCP is running and Reactor Vessel water level is ≤ RVLIS dynamic head range readings corresponding to TAF.

These conditions indicate sub-cooling has been lost and that some fuel clad damage may potentially occur.

Indication that heat removal is extremely challenged is manifested by entry conditions to CSFST Heat Sink-RED path (ref. 4). CSFST Heat Sink-RED path is entered if all SG NR LVLs are ≤ 9% [14%] and total FW flow is ≤ to 365 gpm. The combination of these conditions when heat sink is required indicates the ultimate heat sink function is under extreme challenge. This condition addresses loss of functions required for hot shutdown with the reactor at pressure and temperature and thus is a challenge of the Fuel Clad barrier.

IPEC Basis Reference(s):

1. 2-F-0.2 Core Cooling
2. 3-F-0.2 Core Cooling
3. 2-F-0.3 Heat Sink
4. 3-F-0.3 Heat Sink

Barrier: Fuel Clad

Category: B. Core Exit TCs

Degradation Threat: Loss

Threshold:

2. Core exit TCs > 1,200°F

NEI 99-01 Basis:

Core exit TCs > 1,200°F corresponds to significant superheating of the coolant.

IPEC Basis:

This indication of inadequate core cooling requires prompt operator action. Inadequate core cooling is caused by a substantial loss of primary coolant resulting in a partially or fully uncovered core. Without adequate heat removal, the core decay energy will cause the fuel temperatures to increase. Severe fuel damage will occur unless core cooling is promptly restored.

IPEC Basis Reference(s):

1. 2-F-0.2 Core Cooling
2. 3-F-0.2 Core Cooling
3. 2-FR-C.1 Response to Inadequate Core Cooling
4. 3-FR-C.1 Response to Inadequate Core Cooling

Barrier: Fuel Clad

Category: B. Core Exit TCs

Degradation Threat: Potential Loss

Threshold:

2. Core exit TCs [Unit 2] > 700 °F [Unit 3] > 715 °F

NEI 99-01 Basis:

Core Exit TCs > 700 °F (715 °F) correspond to loss of sub-cooling.

IPEC Basis:

This indication of degraded core cooling requires prompt operator action. Degraded core cooling is caused by a substantial loss of primary coolant resulting in a partially or fully uncovered core. Without adequate heat removal, the core decay energy will cause the fuel temperatures to increase. Significant fuel damage will occur unless core cooling is promptly restored.

IPEC Basis Reference(s):

1. 2-F-0.2 Core Cooling
2. 3-F-0.2 Core Cooling
3. 2-FR-C.1 Response to Inadequate Core Cooling
4. 3-FR-C.1 Response to Inadequate Core Cooling

Barrier: Fuel Clad

Category: C. Radiation

Degradation Threat: Loss

Threshold:

3. Containment radiation monitor R-25 or R-26 > 17 R/hr.

NEI 99-01 Basis:

The specified value indicates the release of reactor coolant, with elevated activity indicative of fuel damage, into the containment.

Reactor coolant concentrations of this magnitude are several times larger than the maximum concentrations (including iodine spiking) allowed within technical specifications and are therefore indicative of fuel damage.

This value is higher than that specified for RCS barrier Loss threshold #1. Thus, this threshold indicates a loss of both the Fuel Clad barrier and RCS barrier that appropriately escalates the emergency classification level to a Site Area Emergency.

IPEC Basis:

NOTE: At Unit 3 radiation monitors R-25 and R-26 are susceptible to Temperature Induced Current which could cause erroneous readings for the first 3 minutes of an event with a large temperature change in the VC. R-25 and R-26 readings should be validated against other radiation monitors, R-2 and R-7, for erroneous readings during this timeframe.

The 17 R/hr. reading is a value that indicates the release of reactor coolant, with elevated activity indicative of fuel damage, into the containment. The reading is calculated assuming the instantaneous release and dispersal of the reactor coolant noble gas and iodine inventory associated with a concentration of 300 μCi/gm dose equivalent 1-131 into the containment atmosphere. Reactor coolant concentrations of this magnitude are several times larger than the maximum concentrations allowed within technical specifications and are therefore indicative of fuel damage (approximately 5 % clad failure depending on core inventory and RCS volume).

IPEC Basis Reference(s):

1. EAL Technical Basis Documentation for R-25 and R-26, Containment Radiation Monitors, Calculation by Dennis Quinn, dated 11/2010

Barrier: Fuel Clad

Category: C. Radiation

Degradation Threat: Potential Loss

Threshold:

None

Barrier: Fuel Clad

Category: D. Inventory

Degradation Threat: Loss

Threshold:

None

Barrier: Fuel Clad

Category: D. Inventory

Degradation Threat: Potential Loss

Threshold:

3. RVLIS [Unit2] < 41% [Unit 3] < 33% with no RCPs running

NEI 99-01 Basis:

The specified value for the potential loss threshold corresponds to the top of the active fuel.

IPEC Basis:

The reactor vessel water level used in this EAL is the value corresponds to the level which is used in CSFSTs to indicate challenge to core cooling and loss of the fuel clad barrier. This is the minimum water level to assure core cooling without further degradation of the clad. Severe core damage can occur and reactor coolant system pressure boundary integrity may not be assured if reactor vessel water level is not maintained above that corresponding to RVLIS at 41% [33%] wl no RCPs running (Unit 2 Dynamic range: < 44% w/ 4 RCPs, < 30% w/ 3 RCPs, < 20% w/ 2 RCPs, < 13% w/ 1 RCPs). RVLIS dynamic range indications are not utilized in this EAL since the RCPs would not be running under conditions where vessel level is approaching the inadequate core cooling condition.

IPEC Basis Reference(s):

1. 2-FR-C.1 Response to Inadequate Core Cooling
2. 3-FR-C.1 Response to Inadequate Core Cooling

Barrier: Fuel Clad

Category: E. Other

Degradation Threat: Loss

Threshold:

4. Primary coolant activity > 300 μCi/gm I-131 dose equivalent

NEI 99-01 Basis:

The specified value corresponds to 300 μCi/gm I-131 equivalent. Assessment by the EAL Task Force indicates that this amount of coolant activity is well above that expected for iodine spikes and corresponds to less than 5% fuel clad damage. This amount of radioactivity indicates significant clad damage and thus the Fuel Clad Barrier is considered lost.

IPEC Basis:

None

IPEC Basis Reference(s):

1. NEI 99-01 Revision 5

Attachment 2 – Fission Product Barrier Loss/Potential Loss Matrix and Bases

Barrier: Fuel Clad

Category: E. Other

Degradation Threat: Potential Loss

Threshold:

None

Barrier: Fuel Clad

Category: F. Judgment

Degradation Threat: Loss

Threshold:

5. **Any** condition in the opinion of the Emergency Director that indicates loss of the Fuel Clad barrier

NEI 99-01 Basis:

This threshold addresses any other factors that are to be used by the Emergency Director in determining whether the Fuel Clad barrier is lost. In addition, the inability to monitor the barrier should also be considered as a factor in Emergency Director judgment that the barrier may be considered lost.

IPEC Basis:

The Emergency Director judgment threshold addresses any other factors relevant to determining if the Fuel Clad barrier is lost. Such a determination should include imminent barrier degradation, barrier monitoring capability and dominant accident sequences.

- Imminent barrier degradation exists if the degradation will likely occur within two hours based on a projection of current safety system performance. The term "imminent" refers to recognition of the inability to reach safety acceptance criteria before completion of all checks.
- Barrier monitoring capability is decreased if there is a loss or lack of reliable indicators. This assessment should include instrumentation operability concerns, readings from portable instrumentation and consideration of offsite monitoring results.
- Dominant accident sequences lead to degradation of all fission product barriers and likely entry to the EOPs. The Emergency Director should be mindful of the Loss of AC

power (Station Blackout) and ATWS EALs to assure timely emergency classification declarations.

IPEC Basis Reference(s):

None

Barrier: Fuel Clad

Category: F. Judgment

Degradation Threat: Potential Loss

Threshold:

4. **Any** condition in the opinion of the Emergency Director that indicates potential loss of the Fuel Clad barrier

NEI 99-01 Basis:

This threshold addresses any other factors that are to be used by the Emergency Director in determining whether the Fuel Clad barrier is potentially lost. In addition, the inability to monitor the barrier should also be considered as a factor in Emergency Director judgment that the barrier may be considered potentially lost.

IPEC Basis:

The Emergency Director judgment threshold addresses any other factors relevant to determining if the Fuel Clad barrier is potentially lost. Such a determination should include imminent barrier degradation, barrier monitoring capability and dominant accident sequences.

- Imminent barrier degradation exists if the degradation will likely occur within two hours based on a projection of current safety system performance. The term "imminent" refers to recognition of the inability to reach safety acceptance criteria before completion of all checks.
- Barrier monitoring capability is decreased if there is a loss or lack of reliable indicators. This assessment should include instrumentation operability concerns, readings from portable instrumentation and consideration of offsite monitoring results.

- Dominant accident sequences lead to degradation of all fission product barriers and likely entry to the EOPs. The Emergency Director should be mindful of the Loss of AC power (Station Blackout) and ATWS EALs to assure timely emergency classification declarations.

IPEC Basis Reference(s):

None

Attachment 2 – Fission Product Barrier Loss/Potential Loss Matrix and Bases

Barrier: Reactor Coolant System

Category: A. CSFST

Degradation Threat: Loss

Threshold:

None

Barrier: Reactor Coolant System

Category: A. CSFST

Degradation Threat: Potential Loss

Threshold:

1. Integrity-RED entry conditions met
   OR
   Heat Sink-RED entry conditions met and heat sink is required

NEI 99-01 Basis:

RCS Integrity - Red indicates an extreme challenge to the safety function derived from appropriate instrument readings.

Heat Sink - Red when heat sink is required indicates the ultimate heat sink function is under extreme challenge.

IPEC Basis:

Unit 2

Critical Safety Function Status Tree (CSFST) Integrity-Red path is entered if both of the following (ref. 1):

- Temperature decrease in any RCS cold leg ≥ 100 F/hr.
- Any RCS pressure-cold leg temperature point to the right of Limit A (Figure F-04-1).

The combination of these conditions indicates the RCS barrier is under significant challenge.

Indication that heat removal is extremely challenged is manifested by entry conditions to CSFST Heat Sink-RED path (ref. 3). CSFST Heat Sink-RED path is entered if all SG NR LVLs are ≤ 10% [27%] and total FW flow is ≤ to 400 gpm. The combination of these conditions when heat sink is required indicates the ultimate heat sink function is under extreme challenge. This condition addresses loss of functions required for hot shutdown with the reactor at pressure and temperature and thus is a challenge of the Fuel Clad barrier.

Unit 3

Critical Safety Function Status Tree (CSFST) Integrity-Red path is entered if both of the following (ref. 2):

- Temperature decrease in any RCS cold leg ≥ 100 F/hr.
- Any RCS pressure-cold leg temperature point to the right of Limit A (Figure F-04-1).

The combination of these conditions indicates the RCS barrier is under significant challenge.

Indication that heat removal is extremely challenged is manifested by entry conditions to CSFST Heat Sink-RED path (ref. 4). CSFST Heat Sink-RED path is entered if all SG NR LVLs are ≤ 9% [14%] and total FW flow is ≤ to 365 gpm. The combination of these conditions when heat sink is required indicates the ultimate heat sink function is under extreme challenge. This condition addresses loss of functions required for hot shutdown with the reactor at pressure and temperature and thus is a challenge of the Fuel Clad barrier.

IPEC Basis Reference(s):

1. 2-F-0.4 Integrity
2. 3-F-0.4 Integrity
3. 2-F-0.3 Heat Sink
4. 3-F-0.3 Heat Sink

Barrier: Reactor Coolant System

Category: B. Core Exit TCs

Degradation Threat: Loss

Threshold:

None

Attachment 2 – Fission Product Barrier Loss/Potential Loss Matrix and Bases

Barrier: Reactor Coolant System

Category: B. Core Exit TCs

Degradation Threat: Potential Loss

Threshold:

None

Barrier: Reactor Coolant System

Category: C. Radiation

Degradation Threat: Loss

Threshold:

1. [Unit 2] R-41 >1.25E-5 µCi/cc or R-42 > 1.0E-2 µCi/cc
   [Unit 3] R-11 >1.25E-5 µCi/cc or R-12 > 5.0E-2 µCi/cc

NEI 99-01 Basis:

The specified values indicate the release of reactor coolant to the containment.

This reading is less than that specified for Fuel Clad barrier threshold #3. Thus, this threshold would be indicative of a RCS leak only. If the radiation monitor reading increased to that specified by Fuel Clad barrier threshold, fuel damage would also be indicated.

IPEC Basis:

> 1.25E-5 µCi/cc on R-41[11] OR > 1.0E-2 µCi/cc on R-42 [Unit 2] or > 5.0E-2 µCi/cc on R-12 [Unit 3] due to RCS leakage indicates the release of reactor coolant to the containment. The indication was derived assuming an increase in RCS leak rate from 1 gpm to 75 gpm over a one hour period and dispersal of the reactor coolant noble gas and iodine inventory associated with FSAR (1% defects) into the containment atmosphere. This EAL is indicative of a RCS leak only. If R-25/R-26 readings increase to that specified by fuel clad loss indicator #3, significant fuel damage would also be indicated..

IPEC Basis Reference(s):

1. EAL Technical Basis Documentation for R-11, R-12, R-41 and R-42, Calculation by Dennis Quinn, dated 11/23/10

Barrier: Reactor Coolant System

Category: C. Radiation

Degradation Threat: Potential Loss

Threshold:

None

Barrier: Reactor Coolant System
Category: D. Inventory Loss
Degradation Threat: Loss
Threshold:

2. RCS leak rate resulting in a loss of RCS sub-cooling (< Table F-2)

Table F-2 RCS Sub-cooling

	RCS Pressure (PSIG)	Sub-cooling (°F)	
		Non-adverse Containment	Adverse Containment
Unit 2	0 – 400	52	83
	401 – 800	36	49
	801 – 1200	23	30
	1201 - 2500	19	26
Unit 3	< 1000	40	112
	1000 – 1900	40	78
	> 1900	40	63

NEI 99-01 Basis:

This threshold addresses conditions where leakage from the RCS is greater than available inventory control capacity such that a loss of sub-cooling has occurred. The loss of sub-cooling is the fundamental indication that the inventory control systems are inadequate in maintaining RCS pressure and inventory against the mass loss through the leak.

IPEC Basis:

2[3]-F-0.2 Critical Safety Function Status Tree, Core Cooling, indicates that if sub-cooling margin based on core exit TCs is less than that specified in Table F-1 RCS Sub-cooling, a loss of RCS sub-cooling has occurred. The loss of sub-cooling is the fundamental indication that the inventory control systems are inadequate in maintaining RCS pressure and inventory against the mass loss through the leak. This threshold addresses conditions in which leakage from the RCS is greater than available inventory control capacity such that a loss of sub-cooling has occurred. 2[3]-AOP-Leak-1, Sudden Increase in RCS Leakage (ref. 2), provides a list of conditions that may be observed when excessive RCS leakage occurs and provides appropriate actions to prevent and mitigate the consequences of RCS leakage.

Following an uncomplicated reactor trip, sub-cooling margin should be greater than that specified in Table F-1 RCS Sub-cooling. Sub-cooling margin greater than the applicable Table F-1 value ensures the fluid surrounding the core is sufficiently cooled and provides margin for reestablishing flow should sub-cooling deteriorate when SI flow is secured. The loss of sub-cooling is therefore the fundamental indication that the inventory control systems are incapable of counteracting the mass loss through the leak in the RCS.

The loss of sub-cooling as a result of inability to establish RCS heat transfer to the ultimate heat sink is indicative of Potential Losses of the Fuel Clad and RCS barriers.

IPEC Basis Reference(s):

1. 2-F-0.2 Core Cooling
2. 3-F-0.2 Core Cooling
3. 2-AOP-Leak-1, Sudden Increase in RCS Leakage
4. 3-AOP-Leak-1, Sudden Increase in RCS Leakage

Barrier: Reactor Coolant System
Category: D. Inventory Loss
Degradation Threat: Loss

Threshold:

3. Ruptured SG results in an ECCS (SI) actuation

NEI 99-01 Basis:

This threshold addresses the full spectrum of Steam Generator (SG) tube rupture events in conjunction with containment barrier Loss thresholds. It addresses ruptured SG(s) for which the leakage is large enough to cause actuation of ECCS (SI). This is consistent with the RCS leak rate barrier Potential Loss threshold.

This condition is described by entry into 2[3]-E-3 SGTR required by EOPs.

By itself, this threshold will result in the declaration of an Alert. However, if the SG is also faulted (i.e., two barriers failed), the declaration escalates to a Site Area Emergency per containment barrier Loss thresholds.

IPEC Basis:

In conjunction with Containment barrier Loss #3 and the Fuel Clad barrier thresholds, this threshold addresses the full spectrum of Steam Generator Tube Rupture (SGTR) events. To meet this threshold, the leakage must be large enough to require actuation of ECCS (SI). ECCS (SI) actuation is caused by:

- Low-low pressurizer pressure
- High steam-line pressure differential between the steam generators
- High steam-line flow in two out of three steam lines, coincident with either low steam-line pressure or low-low T_{avg} in two out of three loops
- High containment pressure

Technical Specifications Table 3.3.2-1 lists allowable values for Safety Injection actuation set-points.

IPEC Basis Reference(s):

1. 2-E-3 Steam Generator Tube Rupture
2. 3-E-3 Steam Generator Tube Rupture
3. Technical Specifications Table 3.3.2-1 Engineered Safety Feature Actuation Set point Instrumentation

Barrier: Reactor Coolant System

Category: D. Inventory

Degradation Threat: Potential Loss

Threshold:

2. RCS leak rate indicated greater than 87 gpm

NEI 99-01 Basis:

This threshold is based on the apparent inability to maintain normal liquid inventory within the Reactor Coolant System (RCS) by normal operation of the Chemical and Volume Control System which is considered to be the flow rate equivalent to one charging pump discharging to the charging header. Isolating letdown is a standard abnormal operating procedure action and may prevent unnecessary classifications when a non-RCS leakage path such as a CVCS leak exists. The intent of this condition is met if attempts to isolate Letdown are not successful. Additional charging pumps being required is indicative of a substantial RCS leak.

IPEC Basis:

Primary system leakage above 87 gpm is based on the inability to maintain normal liquid inventory within the Reactor Coolant System (RCS) by normal operation of the Chemical and Volume Control System, which is considered one charging pump discharging to the charging header.

IPEC Basis Reference(s):

1. 2-AOP-LEAK-1 Sudden Increase in RCS Leakage
2. 3-AOP-LEAK-1 Sudden Increase in RCS Leakage
3. FSAR Table 9.2-2 CVCS Letdown Requirements

Attachment 2 – Fission Product Barrier Loss/Potential Loss Matrix and Bases

Barrier: Reactor Coolant System

Category: E. Other

Degradation Threat: Loss

Threshold:

None

Attachment 2 – Fission Product Barrier Loss/Potential Loss Matrix and Bases

Barrier: Reactor Coolant System

Category: E. Other

Degradation Threat: Potential Loss

Threshold:

None

Barrier: Reactor Coolant System

Category: F. Judgment

Degradation Threat: Loss

Threshold:

4. **Any** condition in the opinion of the Emergency Director that indicates loss of the RCS barrier

NEI 99-01 Basis:

This threshold addresses any other factors that are to be used by the Emergency Director in determining whether the RCS barrier is lost. In addition, the inability to monitor the barrier should also be considered in this threshold as a factor in Emergency Director judgment that the barrier may be considered lost.

IPEC Basis:

The Emergency Director judgment threshold addresses any other factors relevant to determining if the RCS barrier is lost. Such a determination should include imminent barrier degradation, barrier monitoring capability and dominant accident sequences.

- Imminent barrier degradation exists if the degradation will likely occur within two hours based on a projection of current safety system performance. The term "imminent" refers to the recognition of the inability to reach safety acceptance criteria before completion of all checks.

- Barrier monitoring capability is decreased if there is a loss or lack of reliable indicators. This assessment should include instrumentation operability concerns, readings from portable instrumentation and consideration of offsite monitoring results.

- Dominant accident sequences lead to degradation of all fission product barriers and likely entry to the EOPs. The Emergency Director should be mindful of the Loss of AC power (Station Blackout) and ATWS EALs to assure timely emergency classification declarations.

IPEC Basis Reference(s):

None

Barrier: Reactor Coolant System

Category: E. Judgment

Degradation Threat: Potential Loss

Threshold:

3. **Any** condition in the opinion of the Emergency Director that indicates potential loss of the RCS barrier

NEI 99-01 Basis:

This threshold addresses any other factors that are to be used by the Emergency Director in determining whether the RCS barrier is potentially lost. In addition, the inability to monitor the barrier should also be considered in this threshold as a factor in Emergency Director judgment that the barrier may be considered potentially lost.

IPEC Basis:

The Emergency Director judgment threshold addresses any other factors relevant to determining if the RCS barrier is potentially lost. Such a determination should include imminent barrier degradation, barrier monitoring capability and dominant accident sequences.

- Imminent barrier degradation exists if the degradation will likely occur within two hours based on a projection of current safety system performance. The term "imminent" refers to the inability to reach final safety acceptance criteria before completing all checks.
- Barrier monitoring capability is decreased if there is a loss or lack of reliable indicators. This assessment should include instrumentation operability concerns, readings from portable instrumentation and consideration of offsite monitoring results.

- Dominant accident sequences lead to degradation of all fission product barriers and likely entry to the EOPs. The Emergency Director should be mindful of the Loss of AC power (Station Blackout) and ATWS EALs to assure timely emergency classification declarations.

IPEC Basis Reference(s):

None

Attachment 2 – Fission Product Barrier Loss/Potential Loss Matrix and Bases

Barrier: Containment

Category: A. CSFST

Degradation Threat: Loss

Threshold:

None

Barrier: Containment

Category: A. CSFST

Degradation Threat: Potential Loss

Threshold:

1. Containment-RED entry conditions met

NEI 99-01 Basis:

RED path indicates an extreme challenge to the safety function derived from appropriate instrument readings and/or sampling results, and thus represents a potential loss of containment.

Conditions leading to a containment RED path result from RCS barrier and/or Fuel Clad Barrier Loss. Thus, this threshold is primarily a discriminator between Site Area Emergency and General Emergency representing a potential loss of the third barrier.

IPEC Basis:

RED path is entered based on exceeding containment design pressure of 47 psig (ref. 1). This pressure is well in excess of that expected from the design basis loss of coolant accident (ref. 1, 2, 3). This is indicative of a loss of both RCS and fuel clad boundaries in that it is not possible to reach this condition without also being in a Heat Sink-RED or Core Cooling-RED CSFST. The source of energy must be the result of severe degradation of core cooling or loss of heat sink. Since containment pressures at or approaching design levels is also a potential loss of containment, this combination of conditions is expected to require the declaration of a General Emergency.

IPEC Basis Reference(s):

1. 2-F-0.5 Containment
2. 3-F-0.5 Containment
3. Unit 2 FSAR Section 5.1.1.1.5 Reactor Containment
4. Unit 3 FSAR Section 5.1.1.1 Principal Design Criteria

Attachment 2 – Fission Product Barrier Loss/Potential Loss Matrix and Bases

Barrier: Containment

Category: B. Core Exit TCs

Degradation Threat: Loss

Threshold:

None

Barrier: Containment

Category: B. Core Exit TCs

Degradation Threat: Potential Loss

Threshold:

2. Core exit TCs > 1200 ° F.
   AND
   Core exit TCs not lowering within 15 min. of restoration procedure entry

NEI 99-01 Basis:

The conditions in this threshold represents an imminent core melt sequence which, if not corrected, could lead to vessel failure and an increased potential for containment failure. In conjunction with the Core Cooling and RCS Leakage criteria in the Fuel and RCS barrier columns, this threshold would result in the declaration of a General Emergency -- loss of two barriers and the potential loss of a third. If the function restoration procedures are ineffective, there is no "success" path.

The function restoration procedures are those emergency operating procedures that address the recovery of the core cooling critical safety functions. The procedure is considered effective if the temperature is decreasing.

Severe accident analyses (e.g., NUREG-1150) have concluded that function restoration procedures can arrest core degradation within the reactor vessel in a significant fraction of the core damage scenarios, and that the likelihood of containment failure is very small in these events. Given this, it is appropriate to provide a reasonable period to allow function restoration procedures to arrest the core melt sequence.

Whether or not the procedures will be effective should be apparent within 15 minutes. The Emergency Director should make the declaration as soon as it is determined that the procedures have been, or will be ineffective.

IPEC Basis:

This threshold indicates significant core exit superheating and core uncovery. If core exit thermocouple (TC) readings are greater than 1,200°F, Fuel Clad barrier is lost. Core exit TCs provide an indirect indication of fuel clad temperature by measuring the temperature of the primary coolant that leaves the core region. Although clad rupture due to high temperature is not expected for core exit TC readings less than the threshold, temperatures of this magnitude signal significant superheating of the reactor coolant and core uncovery. Events that result in core exit TC readings above the loss threshold are severe accidents and are a severe accident Management "Badly Damaged (BD)" condition. The BD descriptor signifies possible core overheating to the point that clad ballooning/collapse may occur and portions of the core may have melted. It must also be assumed that the loss of RCS inventory is a result of a loss of RCS barrier. These conditions, if not mitigated, will likely lead to core melt which will in turn result in a potential loss of containment.

IPEC Basis Reference(s):

1. 2-F-0.1 Core Cooling
2. 3-F-0.1 Core Cooling
3. 2-FR-C.1 Response to Inadequate Core Cooling
4. 3-FR-C.1 Response to Inadequate Core Cooling

Barrier: Containment

Category: B. Core Exit TCs

Degradation Threat: Potential Loss

Threshold:

3. Core exit TCs > [Unit 2] > 700 °F [Unit 3] > 715 °F.
   AND
   RVLIS [Unit 2] <41% [Unit 3] < 33% w/ no RCPs
   AND
   Core exit TCs not lowering or RVLIS not rising within 15 min. of restoration procedure entry

NEI 99-01 Basis:

The conditions in this threshold represents an imminent core melt sequence which, if not corrected, could lead to vessel failure and an increased potential for containment failure. In conjunction with the Core Cooling and RCS Leakage criteria in the Fuel and RCS barrier columns, this threshold would result in the declaration of a General Emergency -- loss of two barriers and the potential loss of a third. If the function restoration procedures are ineffective, there is no "success" path.

The function restoration procedures are those emergency operating procedures that address the recovery of the core cooling critical safety functions. The procedure is considered effective if the temperature is decreasing or if the vessel water level is increasing.

Severe accident analyses (e.g., NUREG-1150) have concluded that function restoration procedures can arrest core degradation within the reactor vessel in a significant fraction of the core damage scenarios, and that the likelihood of containment failure is very small in these events. Given this, it is appropriate to provide a reasonable period to allow function restoration procedures to arrest the core melt sequence.

Whether or not the procedures will be effective should be apparent within 15 minutes. The Emergency Director should make the declaration as soon as it is determined that the procedures have been, or will be ineffective.

IPEC Basis:

This threshold indicates significant core exit superheating (core exit TC readings >700°F [715 °F] and core uncovery. It must be assumed that the loss of RCS inventory is a result of a loss of the RCS barrier. If RVLIS is reading greater than or equal to the 41% (33%), safety injection has been successful in restoring RCS inventory and core cooling. In the event that RVLIS reads less than 41% [33%], core cooling continues to be degraded. It must also be assumed that the loss of RCS inventory is a result of a loss of RCS barrier. These conditions, if not mitigated, will likely lead to core melt which will in turn result in a challenge of Containment.

IPEC Basis Reference(s):

1. 2-F-0.1 Core Cooling
2. 3-F-0.1 Core Cooling
3. 2-FR-C.1 Response to Inadequate Core Cooling
4. 3-FR-C.1 Response to Inadequate Core Cooling

Attachment 2 – Fission Product Barrier Loss/Potential Loss Matrix and Bases

Barrier: Containment

Category: C. Radiation

Degradation Threat: Loss

Threshold:

None

Barrier: Containment

Category: C. Radiation

Degradation Threat: Potential Loss

Threshold:

4. Containment radiation monitor R-25 or R-26 > 68 R/hr.

NEI 99-01 Basis:

The site specific reading is a value which indicates significant fuel damage well in excess of the thresholds associated with both loss of Fuel Clad and loss of RCS barriers. A major release of radioactivity requiring off-site protective actions from core damage is not possible unless a major failure of fuel cladding allows radioactive material to be released from the core into the reactor coolant.

Regardless of whether containment is challenged, this amount of activity in containment, if released, could have such severe consequences that it is prudent to treat this as a potential loss of containment, such that a General Emergency declaration is warranted.

IPEC Basis:

NOTE: At Unit 3 radiation monitors R-25 and R-26 are susceptible to Temperature Induced Current which could cause erroneous readings for the first 3 minutes of an event with a large temperature change in the VC. R-25 and R-26 readings should be validated against other radiation monitors, R-2 and R-7, for erroneous readings during this timeframe.

The specified reading is higher than that specified for Fuel Clad barrier Loss #3 and RCS barrier Loss #3. Containment radiation readings at or above the Containment barrier Potential Loss threshold, therefore, signify a loss of two fission product barriers and Potential Loss of a third, indicating the need to upgrade the emergency classification to a General Emergency.

The 68 R/hr. reading is a value which indicates significant fuel damage (20 % clad failure) well in excess of the EALs associated with both loss of fuel clad and loss of RCS barriers. NUREG-1228 "Source Estimations During Incident Response to Severe Nuclear Power Plant Accidents," indicates that such conditions do not exist when the amount of clad damage is less than 20%.

IPEC Basis Reference(s):

1. EAL Technical Basis Documentation for R-25 and R-26, Containment Radiation Monitors, Calculation by Dennis Quinn, dated 11/2010

Barrier: Containment

Category: D. Inventory

Degradation Threat: Loss

Threshold:

1. A containment pressure rise followed by a rapid unexplained drop in containment pressure

NEI 99-01 Basis:

Rapid unexplained loss of pressure (i.e., not attributable to containment spray or condensation effects) following an initial pressure increase from a primary or secondary high energy line break indicates a loss of containment integrity.

This indicator relies on operator recognition of an unexpected response for the condition and therefore does not have a specific value associated with it. The unexpected response is important because it is the indicator for a containment bypass condition.

IPEC Basis:

FSAR Chapter 14 describes Containment pressure response under accident conditions.

IPEC Basis Reference(s):

1. FSAR Chapter 14 Safety Analysis

Barrier: Containment

Category: D. Inventory

Degradation Threat: Loss

Threshold:

2. Containment pressure or sump level response not consistent with LOCA conditions

NEI 99-01 Basis:

Containment pressure and sump levels should increase as a result of mass and energy release into containment from a LOCA. Thus, sump level or pressure not increasing indicates containment bypass and a loss of containment integrity.

This indicator relies on operator recognition of an unexpected response for the condition and therefore does not have a specific value associated with it. The unexpected response is important because it is the indicator for a containment bypass condition.

IPEC Basis:

FSAR Chapter 14 describes Containment pressure response under accident conditions.

IPEC Basis Reference(s):

1. FSAR Chapter 14 Safety Analysis

Barrier: Containment

Category: D. Inventory

Degradation Threat: Loss

Threshold:

3. Ruptured SG faulted outside of containment

NEI 99-01 Basis:

The loss threshold recognizes that SG tube leakage can represent a bypass of the Containment barrier as well as a loss of the RCS barrier.

Users should realize that Containment Loss thresholds #3 and #4 could be considered redundant. This was recognized during the development process. The inclusion of a threshold that uses Emergency Procedure commonly used terms like "ruptured and faulted" adds to the ease of the classification process and has been included based on this human factor concern.

Escalation to General Emergency would be based on "Potential Loss" of the Fuel Clad Barrier.

This threshold addresses the condition in which a ruptured steam generator is also faulted. This condition represents a bypass of the RCS and containment barriers and is a subset of the threshold #4. In conjunction with RCS leak rate barrier loss threshold, this would always result in the declaration of a Site Area Emergency.

IPEC Basis:

None

IPEC Basis Reference(s):

1. 2-E-2 Faulted SG
2. 3-E-2 Faulted SG
3. 2-E-3 SG Tube Rupture
4. 3-E-3 SG Tube Rupture

Barrier: Containment

Category: D. Inventory

Degradation Threat: Loss

Threshold:

4. Primary-to-Secondary leak-rate > 10 gpm.
   AND
   Unisolable steam release from affected SG to the environment

NEI 99-01 Basis:

The loss threshold recognizes that SG tube leakage can represent a bypass of the Containment barrier as well as a loss of the RCS barrier.

Users should realize that Containment Loss thresholds #3 and #4 could be considered redundant. This was recognized during the development process. The inclusion of a threshold that uses Emergency Procedure commonly used terms like "ruptured and faulted" adds to the ease of the classification process and has been included based on this human factor concern.

This threshold results in a Unusual Event for smaller breaks that; (1) do not exceed the normal charging capacity threshold in RCS leak rate barrier Potential Loss threshold, or (2) do not result in ECCS actuation in RCS SG tube rupture barrier Loss threshold. For larger breaks, RCS barrier threshold criteria would result in an Alert. For SG tube ruptures which may involve multiple steam generators or unisolable secondary line breaks, this threshold would exist in conjunction with RCS barrier thresholds and would result in a Site Area Emergency. Escalation to General Emergency would be based on "Potential Loss" of the Fuel Clad Barrier.

This threshold addresses SG tube leaks that exceed 10 gpm in conjunction with an unisolable release path to the environment from the affected steam generator. The threshold for establishing the unisolable secondary side release is intended to be a prolonged release of radioactivity from the ruptured steam generator directly to the environment. This could be expected to occur when the main condenser is unavailable to accept the contaminated steam

(i.e., SG tube rupture with concurrent loss of off-site power and the ruptured steam generator is required for plant cool down or a stuck open relief valve). If the main condenser is available, there may be releases via air ejectors, gland seal exhausters, and other similar controlled, and often monitored, pathways. These pathways do not meet the intent of an unisolable release path to the environment. These minor releases are assessed using Abnormal Rad Levels / Radiological Effluent EALs.

IPEC Basis:

None

IPEC Basis Reference(s):

1. 2-E-2 Faulted SG
2. 3-E-2 Faulted SG
3. 2-E-3 SG Tube Rupture
4. 3-E-3 SG Tube Rupture

Barrier: Containment

Category: D. Inventory

Degradation Threat: Potential Loss

Threshold:

5. Containment pressure > 47 psig and rising

NEI 99-01 Basis:

47 psig is the containment design pressure.

IPEC Basis:

This threshold is the containment design pressure and is in excess of that expected from the design basis loss of coolant accident (LOCA). Proper actuation and operation of the Containment heat removal system when required should maintain containment pressure well below the design pressure. The Containment response for the spectrum of LOCAs considered in the plant design basis is described in Chapter 14 of the FSAR (ref. 2). The threshold is therefore indicative of a loss of both RCS and Fuel Clad barriers in that it should not be reached without severe core degradation (metal-water reaction) or failure to trip in combination with RCS breach. This condition would be expected to require the declaration of a General Emergency.

IPEC Basis Reference(s):

1. 2-F-0.5 Containment
2. 3-F-0.5 Containment
3. FSAR Chapter 14 Safety Analysis

Barrier: Containment

Category: D. Inventory

Degradation Threat: Potential Loss

Threshold:

6. Containment hydrogen concentration ≥ 4%

NEI 99-01 Basis:

Existence of an explosive mixture means a hydrogen and oxygen concentration of at least the lower deflagration limit curve exists. The indications of potential loss under this EAL corresponds to some of those leading to the RED path in potential loss threshold #1 (ref. 1).

IPEC Basis:

After a LOCA, the containment atmosphere is a homogeneous mixture of steam, air, solid and gaseous fission products, hydrogen, and water droplets. During and following a LOCA, the hydrogen concentration in the containment results from radio lytic decomposition of water and metal-water reaction. If hydrogen concentration reaches or exceeds the lower flammability limit (4%, ref. 3) in an oxygen rich environment, a potentially explosive mixture exists. Operation of the Containment Hydrogen Re-combiner with Containment hydrogen concentrations at or above 4% could result in ignition of the hydrogen. If the combustible mixture ignites inside containment, loss of the Containment barrier could occur. To generate such levels of combustible gas, loss of the Fuel Clad and RCS barriers must also have occurred. Since this threshold is also indicative of loss of both Fuel Clad and RCS barriers with the Potential Loss of the Containment barrier, it therefore will likely warrant declaration of a General Emergency.

Unit 2

Containment hydrogen analyzers AIT-5109-1 and AIT-5109-1 display hydrogen concentration and alarm at 4% hydrogen concentration (ref. 2).

Unit 3

The Containment Hydrogen Concentration Measurement System is used to monitor the post-accident hydrogen concentration. Two redundant sample systems are installed. One unit samples the plenum chambers of containment recirculation fans 32 and 35. The second unit samples the plenum chambers of recirculation fans 31, 33 and 34. (ref. 4)

IPEC Basis Reference(s):

1. 2-F-0.5 Containment
2. 3-F-0.5 Containment
3. 2-ARP-043 Accident Assessment Panel 1
4.. 2-FR-C.1 Response to Inadequate Core Cooling
5. 3-FR-C.1 Response to Inadequate Core Cooling
6. SOP-SS-4 Containment Hydrogen Measurement System

Barrier: Containment

Category: D. Inventory

Degradation Threat: Potential Loss

Threshold:

7. Containment pressure > Phase B isolation signal set-point following LOCA
   AND
   Less than Table F-3 depressurization equipment operating

Table F-3 Minimum Containment Cooling Systems

FCUs	Spray Pumps
< 3	2
3	1
5	0

NEI 99-01 Basis:

This threshold represents a potential loss of containment in that the containment heat removal/depressurization systems are either lost or performing in a degraded manner, as indicated by plant parameters such as containment pressure, pressurizer level and steam line pressure in excess of the set-point at which the equipment was supposed to have actuated.

IPEC Basis:

Adequate heat removal capability for the containment is provided by two separate, full capacity, engineered safety features systems. These are the containment spray system and the containment air recirculation cooling and filtration system. These systems are of different engineering principles and serve as independent backups for each other.

Together these two systems provide the single failure protection for the containment cooling function as analyzed in Chapter 14 of the FSAR.

The containment air recirculation cooling system is designed to recirculate and cool the containment atmosphere in the event of a loss-of-coolant accident and thereby ensure that the containment pressure will not exceed its design value of 47 psig.

Any of the following combinations of equipment will provide sufficient heat removal capability to maintain the post-accident containment pressure below the design value, assuming that the core residual heat is released to the containment as steam (ref. 1, 2):

1. All five containment cooling fans (FCUs)
2. Both Containment Spray alone
3. One containment spray pump and three of the five containment cooling fans

IPEC Basis Reference(s):

1. Unit 2 FSAR Section 6.4.1.1 Containment Heat Removal Systems
2. Unit 3 FSAR Section 6.4.1 Containment Heat Removal Systems

Barrier: Containment

Category: E. Other

Degradation Threat: Loss

Threshold:

5. Inability to isolate all valves in any one line

   AND

   Direct downstream pathway to the environment exists after containment isolation signal

NEI 99-01 Basis:

This threshold addresses incomplete containment isolation that allows direct release to the environment.

The use of the modifier "direct" in defining the release path discriminates against release paths through interfacing liquid systems. The existence of an in–line charcoal filter does not make a release path indirect since the filter is not effective at removing fission product noble gases. Typical filters have an efficiency of 95-99% removal of iodine. Given the magnitude of the core inventory of iodine, significant releases could still occur. In addition, since the fission product release would be driven by boiling in the reactor vessel, the high humidity in the release stream can be expected to render the filters ineffective in a short period.

IPEC Basis:

This threshold is intended to address incomplete containment isolation that allows direct downstream release path to the environment.

The "inability to isolate all valves in any one line" term is intended to mean that available immediate action has been taken to isolate the system providing a direct release pathway outside containment but has failed. If no immediate action to isolate the system is available at the time it is recognized, or the location of the leak is not known such that immediate action to

isolate cannot be initiated, then assume the "inability to isolate" condition exists for the purpose of emergency classification. Actions external to the Control Room shall be considered available only if they can be completed using normal operational procedures consistent with the requirement for "timely" emergency classification (within 15 minutes).

IPEC Basis Reference(s):

None

Barrier: Containment

Category: F. Judgment

Degradation Threat: Loss

Threshold:

6. **Any** condition in the opinion of the Emergency Director that indicates loss of the Containment barrier

NEI 99-01 Basis:

This threshold addresses any other factors that are to be used by the Emergency Director in determining whether the Containment barrier is lost. In addition, the inability to monitor the barrier should also be considered as a factor in Emergency Director judgment that the barrier may be considered lost.

The Containment barrier should not be declared lost based on exceeding Technical Specification action statement criteria, unless there is an event in progress requiring mitigation by the Containment barrier. When no event is in progress (Loss or Potential Loss of either Fuel Clad and/or RCS) the Containment barrier status is addressed by Technical Specifications.

IPEC Basis:

The Emergency Director judgment threshold addresses any other factors relevant to determining if the Primary Containment barrier is lost. Such a determination should include imminent barrier degradation, barrier monitoring capability and dominant accident sequences.

- Imminent barrier degradation exists if the degradation will likely occur within two hours based on a projection of current safety system performance. The term "imminent" refers to recognition of the inability to reach safety acceptance criteria before completion of all checks.

- Barrier monitoring capability is decreased if there is a loss or lack of reliable indicators. This assessment should include instrumentation operability concerns, readings from portable instrumentation and consideration of offsite monitoring results.
- Dominant accident sequences lead to degradation of all fission product barriers and likely entry to the EOPs. The Emergency Director should be mindful of the Loss of AC power (Station Blackout) and ATWS EALs to assure timely emergency classification declarations.

IPEC Basis Reference(s):

None

Barrier: Containment

Degradation Threat: Potential Loss

Category: E. Judgment

Threshold:

6. **Any** condition in the opinion of the Emergency Director that indicates potential loss of the Containment barrier

NEI 99-01 Basis:

This threshold addresses any other factors that are to be used by the Emergency Director in determining whether the Primary Containment barrier is potentially lost. In addition, the inability to monitor the barrier should also be considered as a factor in Emergency Director judgment that the barrier may be considered potentially lost.

The Containment barrier should not be declared potentially lost based on exceeding Technical Specification action statement criteria, unless there is an event in progress requiring mitigation by the Containment barrier. When no event is in progress (Loss or Potential Loss of either Fuel Clad and/or RCS) the Containment barrier status is addressed by Technical Specifications.

IPEC Basis:

The Emergency Director judgment threshold addresses any other factors relevant to determining if the Primary Containment barrier is potentially lost. Such a determination should include imminent barrier degradation, barrier monitoring capability and dominant accident sequences.

- Imminent barrier degradation exists if the degradation will likely occur within two hours based on a projection of current safety system performance. The term "imminent" refers to recognition of the inability to reach safety acceptance criteria before completion of all checks.

- Barrier monitoring capability is decreased if there is a loss or lack of reliable indicators. This assessment should include instrumentation operability concerns, readings from portable instrumentation and consideration of offsite monitoring results.
- Dominant accident sequences lead to degradation of all fission product barriers and likely entry to the EOPs. The Emergency Director should be mindful of the Loss of AC power (Station Blackout) and ATWS EALs to assure timely emergency classification declarations.

IPEC Basis Reference(s):

None