Module II – Circuit Analysis

Task 10: Circuit Failure Mode Likelihood Analysis

Joint EPRI/NRC-RES Fire PRA Workshop
June 25-29, 2018

Gabe Taylor – U.S. NRC

Daniel Funk – JENSEN HUGHES

Dane Lovelace – JENSEN HUGHES

A Collaboration of the Electric Power Research Institute (EPRI) & U.S. NRC Office of Nuclear Regulatory Research (RES)

CIRCUIT FAILURE MODE LIKELIHOOD ANALYSIS

Purpose & Scope (per 6850/1011989)

The Circuit Failure Mode Likelihood Analysis Task is intended to:

- Establish first-order probability estimates for the Circuit Failure Modes of interest

AND

- Correlate those Failure Mode Probabilities to specific components

CIRCUIT FAILURE MODE LIKELIHOOD ANALYSIS (CFMLA)

State-of-the-Art

Recent advances in the state of knowledge has provided refined methods for calculating the likelihood and duration of hot short-induced spurious operations caused by fire damage.

This presentation will focus on the use and application of the state-of-the-art methods and data presented in NUREG/CR-7150, Volume 1 & 2.

U.S.NRC
UNITED STATES NUCLEAR REGULATORY COMMISSION
Protecting People and the Environment

EPRI ELECTRIC POWER RESEARCH INSTITUTE

NUREG/CR-7150, Vol. 2 (JACQUE-FIRE)

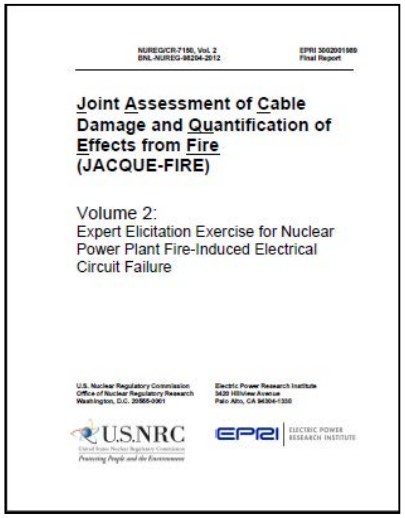

NUREG/CR-7150, Vol. 2
BNL-NUREG-98204-2012

EPRI 3002001989
Final Report

Joint Assessment of Cable Damage and Quantification of Effects from Fire (JACQUE-FIRE)

Volume 2:
Expert Elicitation Exercise for Nuclear Power Plant Fire-Induced Electrical Circuit Failure

U.S. Nuclear Regulatory Commission
Office of Nuclear Regulatory Research
Washington, D.C. 20555-0001

Electric Power Research Institute
3420 Hillview Avenue
Palo Alto, CA 94304-1395

U.S.NRC United States Nuclear Regulatory Commission Protecting People and the Environment

EPRI ELECTRIC POWER RESEARCH INSTITUTE

NUREG/CR-7150, JACQUE-FIRE, Volume 2, Expert Elicitation Exercise for Nuclear Power Plant Fire-Induced Electrical Circuit, May 2014 (ML14141A129)

NUREG/CR-7150, Vol. 2 (JACQUE-FIRE)

Report Contents

- Advance the state-of-the-art for quantification of fire-induced circuit failure model likelihood analysis
- Use expert judgment and recent test results to quantify conditional hot short-induced spurious operation likelihood estimates and conditional probability of spurious operation duration
- Used results from NUREG/CR-7150 Vol. 1 and test data
- Panel proponents presented/defended their estimates or models
- Technical integration team determined direction on how to use proponent input
- BNL combined proponents input and developed report

NUREG/CR-7150, Vol. 2

Circuits Covered by Report

- These five variables resulted in developing spurious operation conditional probability tables for the following two control circuit configurations, namely;

- 1. Single Break (or Contact) Control Circuits
  - a. Base Case - SOV
  - b. MOV
  - c. Low Voltage and Medium Voltage* Power Circuit Breaker

- 2. Double Break (or Contact) Control Circuits (for ungrounded circuits)
  - a. Base Case - SOV
  - b. MOV

*1,000 to 15,000Volts

U.S.NRC UNITED STATES NUCLEAR REGULATORY COMMISSION Protecting People and the Environment
EPRI ELECTRIC POWER RESEARCH INSTITUTE

NUREG/CR-7150, Vol. 2

Variables Needed to Assign Conditional Probabilities

- The control circuit cases for hot short-induced spurious operation evaluated by the PRA panel were categorized in Volume 1 using the following five (5) circuit variables:
  - Circuit Configurations – Single Break, Double Break
  - Circuit Type Cases – SOV, MOV, Low and Medium Voltage Power Circuit Breaker
  - Circuit Grounding/Power Supply Types – Grounded AC, Ungrounded AC (with Individual CPTs), Ungrounded DC (or Ungrounded Distributed AC*)
  - Target Cable Constructions – TS-insulated conductor cable, TP-insulated conductor cable, Metal Foil Shield Wrap Cable**, Armored Cable
  - Conductor Failure Modes – Intra-cable hot short, Inter-cable hot short, GFEHS

* Distributed ac is a term used in NUREG/CR-7150 to describe an ungrounded ac system that is not associated with a single motor control center control power transformer.

** Grounded robust metallic shield wrap (not simply aluminized Mylar).

NUREG/CR-7150, Vol. 2

Refresh on Cable Construction

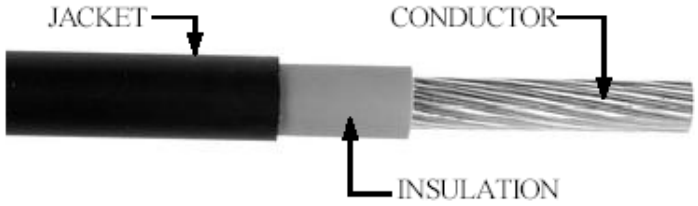

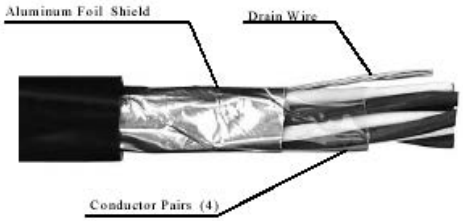

Figure 3.6 Illustration of Instrument Cable

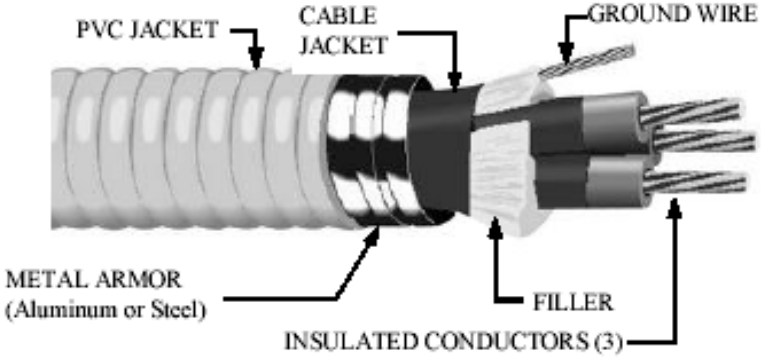

NUREG/CR-7150, Vol. 2

Treatment of Special Cable Configurations

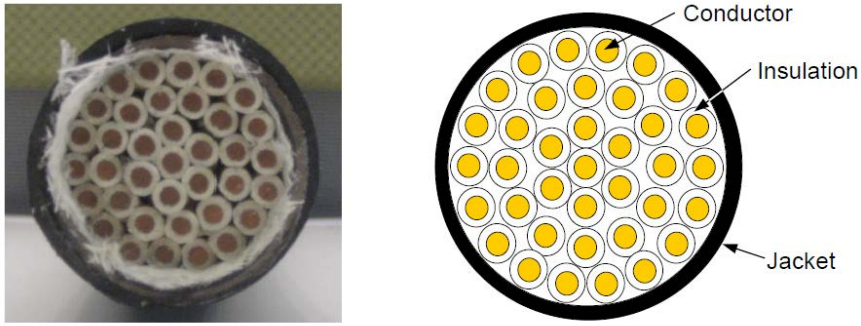

Figure 6-5. Photo and Illustration of 37/C Trunk Cable

Figure 6-4. Typical Panel Wiring Configurations

NUREG/CR-7150, Vol. 2

Spurious Operation Duration

- Section 7 of NUREG/CR-7150, Vol. 2 offers guidance in applying the spurious operation conditional probability tables, the spurious operation duration plots, and related issues that should be considered in analyzing the fire PRA circuit.
- Two duration curves are provided that estimate the likelihood of a spurious operation lasting for “T > t” minutes (i.e., P(T>t)
- To determine what T to use, the analysis must determine the critical spurious operation duration for the particular system being analyzed
- Reactor and system engineers, along with PRA analysis will likely have to be involved to determine this time. Thermal-hydraulic analysis of the system under evaluation will likely have to be performed
- Once this time is determined, a conditional spurious operation duration likelihood estimate can be obtained

U.S.NRC UNITED STATES NUCLEAR REGULATORY COMMISSION Protecting People and the Environment
EPRI ELECTRIC POWER RESEARCH INSTITUTE

NUREG/CR-7150, Vol. 2
Spurious Operation Duration

- NUREG/CR-7150, Vol. 2 Section 7.3.4.2 contains considerations and limitations in applying durations.
- During final issuance of NUREG, this information was developed and refined.
- Guidance provides limits on MSO dependency treatment.
- Guidance/considerations provided based on:
  - Number of cables involved
  - Number of conductors
  - Single or double break

U.S.NRC UNITED STATES NUCLEAR REGULATORY COMMISSION Protecting People and the Environment
EPRI ELECTRIC POWER RESEARCH INSTITUTE

NUREG/CR-7150, Vol. 2

Durations – Assumptions and Limitations

Durations **should NOT** be applied to

- Grounded ac circuits, spurious operations of equipment caused by grounding of one or more conductors.
- If spurious operations produced by a hot short would not clear once the cable is grounded (e.g., switchgear breaker control power after breaker spuriously closed)
- Shorts to ground on an “off-scheme” circuit. Duration could be applied if a functional circuit analysis demonstrating the effect of a short to ground on the auxiliary circuit were conducted and indicated that application of duration is appropriate.
- Circuit with a “seal-in” or “lock-in” design. Circuits that only require a momentary spurious operation to cause the device to change states.

Methodology

NUREG/CR-7150, Vol. 2

Methodology – Major Steps

- Step 1: Compile and Evaluate Prerequisite Information and Data
- Step 2: Perform Circuit Failure Mode Likelihood Analyses
- Step 3: Document the Results

NUREG/CR-7150, Vol. 2

Step 1: Compile and Evaluate Prerequisite Information and Data

- Ensure that prerequisite information and data are available and usable before beginning the analyses.
- Confirm completion of Detailed Circuit Analysis for components of interest
- Collect important cable and circuit configuration attribute information:
- Applicable cable Failure Modes (from Detailed Circuit Analysis)
  - Intra-cable, Inter-cable, GFEHS
- Circuit Design
  - Single or Double Break

U.S.NRC UNITED STATES NUCLEAR REGULATORY COMMISSION Protecting People and the Environment
EPRI ELECTRIC POWER RESEARCH INSTITUTE

NUREG/CR-7150, Vol. 2

Step 1: Compile and Evaluate Prerequisite Information and Data (cont.)

- Circuit Type
  - SOV (single contactor type), MOV, Breaker
- Circuit Grounding and Power source(s)
  - Grounded vs. Ungrounded
  - AC vs. DC
- Cable Configuration
  - Thermoset-insulated, Thermoplastic-insulated, Metal Foil Shield Wrap, Armored

NUREG/CR-7150 Vol. 2

Step 2 Flowchart

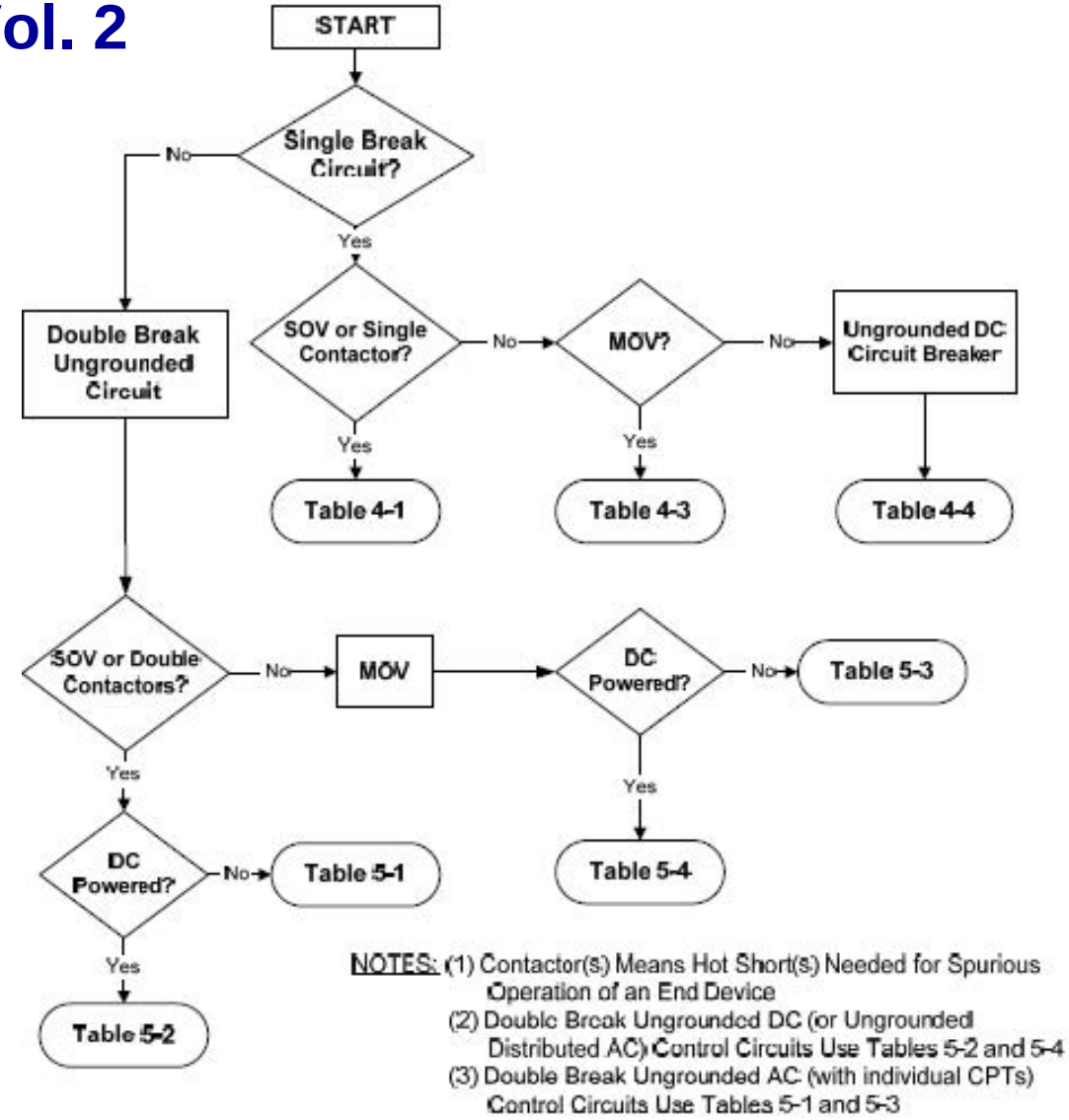

Figure 7-1. Flowchart Showing Process Used to Determine Appropriate Spurious Operation Table

NUREG/CR-7150, Vol. 2

Step 2: Circuit Failure Mode Likelihood Analysis (cont.)

- **Failure Mode Probability Estimate Tables**
  - Table 4-1. Conditional Probability of Spurious Operation: SOV Single Break-Control Circuits
  - Table 4-3. Conditional Probability of Spurious Operation: MOV Single Break Control Circuits
  - Table 4-4. Conditional Probability of Spurious Operation: Ungrounded DC Control Circuits for Low and Medium Voltage Power Circuit Breaker

NUREG/CR-7150, Vol. 2 Process

Step 2: Circuit Failure Mode Likelihood Analysis (cont.)

- **Failure Mode Probability Estimate Tables**
  - Table 5-1 - Conditional Probability of Spurious Operation: Double Break Control Circuits for Ungrounded AC (w/ individual CPTs) Base Case – SOV
  - Table 5-2 - Conditional Probability of Spurious Operation: Double Break Control Circuits
  - Table 5-3 - Conditional Probability of Spurious Operation: Double Break Control Circuits for Ungrounded AC (w/ individual CPTs) Motor-Operated Valve
  - Table 5-4 - Conditional Probability of Spurious Operation: Double Break Control Circuits Ungrounded DC (or Ungrounded Distributed AC)

U.S.NRC UNITED STATES NUCLEAR REGULATORY COMMISSION Protecting People and the Environment
EPRI ELECTRIC POWER RESEARCH INSTITUTE

NUREG/CR-7150, Vol. 2

Step 2: Circuit Failure Mode Likelihood Analysis

- **Spurious Operation Duration Tables or Probability Distribution**
  - Table 6-3. Tabulated Spurious Operation Duration Conditional Probability Values for AC and DC Control Circuits

U.S.NRC UNITED STATES NUCLEAR REGULATORY COMMISSION Protecting People and the Environment
EPRI ELECTRIC POWER RESEARCH INSTITUTE

NUREG/CR-7150, Vol. 2

Step 2: Circuit Failure Mode Likelihood Analysis (cont'd)

- **Choosing the Values**
  - "Aggregate" represents a mathematical summation of probability distributions for all possible circuit failure modes due to hot shorts within a specific cable insulation-power supply scenario.
  - (NUREG/CR-7150, Vol. 2, Section 7.2) Aggregate values are given for every case where all potential hot short-induced failure modes are applicable. Unlike NUREG/CR-6850, the new estimates are explicit parametric distributions.
  - Aggregate row in the tables represents the summation from using these parametric distributions for all applicable modes of hot short failure.
  - Unless it is demonstrated that a cable under evaluation is only susceptible to a single failure mode, the aggregate values should be used.

U.S.NRC UNITED STATES NUCLEAR REGULATORY COMMISSION Protecting People and the Environment
EPRI ELECTRIC POWER RESEARCH INSTITUTE

NUREG/CR-7150, Vol. 2

Step 2: Circuit Failure Mode Likelihood Analysis (cont.)

Choosing the Values

- Ungrounded DC (or ungrounded distributed AC) control circuits are subject to three possible hot short failure modes. The Aggregate column provides the conditional probability when all three hot short modes are applicable. When 2 out of these 3 hot short modes are applicable; the combined conditional probability of the two hot short failure modes must use their sum (using Boolean OR). See NUREG/CR-7150, Vol. 2 Section 7.2

- As noted in Section 6, the conditional probabilities of duration are not separated for intra-cable, inter-cable, or aggregate spurious operation events.

NUREG/CR-7150 Vol. 2

Tables

Table 4-1. Conditional Probability of Spurious Operation: SOV Single Break-Control Circuits

Power Supply →			Grounded AC			Ungrounded AC (w/ Individual CPTs)			Ungrounded DC (or Ungrounded Distributed AC)			
			Conductor Hot Short Failure Mode									
Target Cable Configuration		Beta Distribution Characteristics	Intra-Cable	Inter-Cable	Aggregate	Intra-Cable	Inter-Cable	Aggregate	Intra-Cable	Inter-Cable	Ground Fault Equivalent	Aggregate
			1	2	3	4	5	6	7	8	9	10
Thermoset-Insulated Conductor Cable	1	Alpha	8.54	0.36	8.79	4.73	0.60	4.74	10.16	0.32	2.27	12.76
		Beta	11.74	35.25	11.81	2.69	613.31	2.69	11.70	50.01	11.45	10.18
		5%	*2.5E-01*	*4.6E-06*	*2.6E-01*	*3.4E-01*	*8.9E-06*	*3.4E-01*	*2.9E-01*	*1.2E-06*	*3.8E-02*	*3.9E-01*
		Mean	**4.2E-01**	**1.0E-02**	**4.3E-01**	**6.4E-01**	**9.7E-04**	**6.4E-01**	**4.6E-01**	**6.3E-03**	**1.7E-01**	**5.6E-01**
		95%	*6.0E-01*	*4.3E-02*	*6.1E-01*	*8.9E-01*	*3.5E-03*	*8.9E-01*	*6.4E-01*	*2.8E-02*	*3.5E-01*	*7.2E-01*
Thermoplastic-Insulated Conductor Cable	2	Alpha	8.54	0.85	9.19	4.73	0.27	4.86	10.16	0.92	1.83	12.66
		Beta	11.74	32.67	11.90	2.69	17.16	2.71	11.70	44.19	10.36	10.19
		5%	*2.5E-01*	*8.6E-04*	*2.7E-01*	*3.4E-01*	*5.2E-07*	*3.5E-01*	*2.9E-01*	*8.7E-04*	*2.6E-02*	*3.8E-01*
		Mean	**4.2E-01**	**2.5E-02**	**4.4E-01**	**6.4E-01**	**1.5E-02**	**6.4E-01**	**4.6E-01**	**2.0E-02**	**1.5E-01**	**5.5E-01**
		95%	*6.0E-01*	*7.9E-02*	*6.1E-01*	*8.9E-01*	*7.2E-02*	*8.9E-01*	*6.4E-01*	*6.2E-02*	*3.4E-01*	*7.2E-01*
Metal Foil Shield Wrap Cable	3	Alpha	1.22	Incredible	1.22	2.63	Incredible	2.63	2.54	Incredible	1.97	4.68
		Beta	3.77		3.77	2.24		2.24	2.79		4.54	2.69
		5%	*2.5E-02*		*2.5E-02*	*1.9E-01*		*1.9E-01*	*1.6E-01*		*6.7E-02*	*3.4E-01*
		Mean	**2.4E-01**		**2.4E-01**	**5.4E-01**		**5.4E-01**	**4.8E-01**		**3.0E-01**	**6.3E-01**
		95%	*5.9E-01*		*5.9E-01*	*8.7E-01*		*8.7E-01*	*8.1E-01*		*6.1E-01*	*8.9E-01*
Armored Cable	4	Alpha	0.22	Incredible	0.22	4.00	Incredible	4.00	9.82	Incredible	2.77	14.63
		Beta	4.52		4.52	4.93		4.93	3.59		2.97	2.34
		5%	*2.3E-07*		*2.3E-07*	*1.9E-01*		*1.9E-01*	*5.2E-01*		*1.7E-01*	*7.1E-01*
		Mean	**4.7E-02**		**4.7E-02**	**4.5E-01**		**4.5E-01**	**7.3E-01**		**4.8E-01**	**8.6E-01**
		95%	*2.4E-01*		*2.4E-01*	*7.1E-01*		*7.1E-01*	*9.0E-01*		*8.0E-01*	*9.7E-01*

U.S.NRC UNITED STATES NUCLEAR REGULATORY COMMISSION Protecting People and the Environment
EPRI ELECTRIC POWER RESEARCH INSTITUTE

NUREG/CR-7150 Vol. 2

Tables

Table 4-3. Conditional Probability of Spurious Operation: MOV Single Break Control Circuits

Power Supply →			Grounded AC			Ungrounded AC (w/ Individual CPTs)			Ungrounded DC (or Ungrounded Distributed AC)			
			Conductor Hot Short Failure Mode									
Target Cable Configuration		Beta Distribution Characteristics	Intra-Cable	Inter-Cable	Aggregate	Intra-Cable	Inter-Cable	Aggregate	Intra-Cable	Inter-Cable	Ground Fault Equivalent	Aggregate
			1	2	3	4	5	6	7	8	9	10
Thermoset-Insulated Conductor Cable	1	Alpha	5.55	0.36	5.80	4.81	0.58	4.81	5.53	0.32	1.93	7.65
		Beta	14.98	40.31	15.16	7.69	687.61	7.68	12.03	56.43	14.97	11.63
		5%	*1.3E-01*	*4.1E-06*	*1.3E-01*	*1.8E-01*	*7.1E-06*	*1.8E-01*	*1.5E-01*	*1.0E-06*	*2.1E-02*	*2.2E-01*
		Mean	**2.7E-01**	**8.8E-03**	**2.8E-01**	**3.8E-01**	**8.5E-04**	**3.9E-01**	**3.1E-01**	**5.6E-03**	**1.1E-01**	**4.0E-01**
		95%	*4.4E-01*	*3.8E-02*	*4.5E-01*	*6.1E-01*	*3.1E-03*	*6.1E-01*	*5.0E-01*	*2.5E-02*	*2.6E-01*	*5.8E-01*
Thermoplastic-Insulated Conductor Cable	2	Alpha	5.55	0.84	6.20	4.81	0.27	5.02	5.53	0.91	1.50	7.58
		Beta	14.98	37.19	15.43	7.69	19.75	7.75	12.03	49.25	13.25	11.55
		5%	*1.3E-01*	*7.2E-04*	*1.4E-01*	*1.8E-01*	*4.5E-07*	*1.9E-01*	*1.5E-01*	*7.4E-04*	*1.3E-02*	*2.2E-01*
		Mean	**2.7E-01**	**2.2E-02**	**2.9E-01**	**3.8E-01**	**1.3E-02**	**3.9E-01**	**3.1E-01**	**1.8E-02**	**1.0E-01**	**4.0E-01**
		95%	*4.4E-01*	*7.0E-02*	*4.5E-01*	*6.1E-01*	*6.3E-02*	*6.2E-01*	*5.0E-01*	*5.6E-02*	*2.5E-01*	*5.8E-01*
Metal Foil Shield Wrap Cable	3	Alpha	1.20	Incredible	1.20	3.64	Incredible	3.64	2.62	Incredible	2.11	4.85
		Beta	6.15		6.15	6.15		6.15	5.95		7.41	5.72
		5%	*1.5E-02*		*1.5E-02*	*1.5E-01*		*1.5E-01*	*8.9E-02*		*4.9E-02*	*2.2E-01*
		Mean	**1.6E-01**		**1.6E-01**	**3.7E-01**		**3.7E-01**	**3.1E-01**		**2.2E-01**	**4.6E-01**
		95%	*4.2E-01*		*4.2E-01*	*6.3E-01*		*6.3E-01*	*5.8E-01*		*4.6E-01*	*7.1E-01*
Armored Cable	4	Alpha	0.21	Incredible	0.21	3.76	Incredible	3.76	7.52	Incredible	3.10	10.97
		Beta	5.94		5.94	10.05		10.05	9.24		7.72	7.12
		5%	*6.7E-08*		*6.7E-08*	*1.0E-01*		*1.0E-01*	*2.6E-01*		*9.5E-02*	*4.2E-01*
		Mean	**3.4E-02**		**3.4E-02**	**2.7E-01**		**2.7E-01**	**4.5E-01**		**2.9E-01**	**6.1E-01**
		95%	*1.7E-01*		*1.7E-01*	*4.8E-01*		*4.8E-01*	*6.5E-01*		*5.2E-01*	*7.8E-01*

4-7

NUREG/CR-7150 Vol. 2

Tables

Table 4-4. Conditional Probability of Spurious Operation: Ungrounded DC Control Circuits for Medium Voltage Circuit Breaker

Characteristics of Beta Distribution	Probability Value
Alpha	5.54
Beta	8.47
5%	*2.0E-01*
Mean	**4.0E-01**
95%	*6.1E-01*

U.S.NRC UNITED STATES NUCLEAR REGULATORY COMMISSION Protecting People and the Environment
EPRI ELECTRIC POWER RESEARCH INSTITUTE

NUREG/CR-7150 Vol. 2

Tables

Table 5-1. Conditional Probability of Spurious Operation: Double Break Control Circuits for Ungrounded AC (w/ individual CPTs) Base Case – SOV

Target Cable Configuration		Beta Distribution Characteristic	Conductor Hot Short Failure Mode Combinations			
			Intra-Cable & Intra-Cable	Intra-Cable & Inter-Cable	Inter-Cable & Inter-Cable	Aggregate
			1	2	3	4
Thermoset-Insulated Conductor Cable	1	Alpha	2.12	0.68	Incredible	2.58
		Beta	2.78	9.83		2.92
		5%	*1.2E-01*	*1.1E-03*		*1.5E-01*
		Mean	**4.3E-01**	**6.5E-02**		**4.7E-01**
		95%	*7.8E-01*	*2.1E-01*		*8.0E-01*
Thermoplastic -Insulated Conductor Cable	2	Alpha	2.12	0.34	0.48	2.52
		Beta	2.78	3.85	89.92	2.71
		5%	*1.2E-01*	*3.2E-05*	*1.6E-05*	*1.6E-01*
		Mean	**4.3E-01**	**8.2E-02**	**5.3E-03**	**4.8E-01**
		95%	*7.8E-01*	*3.5E-01*	*2.1E-02*	*8.1E-01*
Metal Foil Shield Wrap Cable	3	Alpha	1.18	0.88	Incredible	1.86
		Beta	2.35	6.43		2.64
		5%	*3.6E-02*	*5.0E-03*		*9.4E-02*
		Mean	**3.3E-01**	**1.2E-01**		**4.1E-01**
		95%	*7.5E-01*	*3.5E-01*		*7.8E-01*
Armored Cable	4	Alpha	1.56	0.86	Incredible	2.44
		Beta	5.34	4.42		4.50
		5%	*3.4E-02*	*6.8E-03*		*1.0E-01*
		Mean	**2.3E-01**	**1.6E-01**		**3.5E-01**
		95%	*5.1E-01*	*4.6E-01*		*6.5E-01*

Note: Inter-cable hot shorts are assumed to involve GFEHS failure modes.

NUREG/CR-7150 Vol. 2

Tables

Table 5-2. Conditional Probability of Spurious Operation: Double Break Control Circuits Ungrounded DC (or Ungrounded Distributed AC) BASE CASE – SOV

Target Cable Configuration		Beta Distribution Characteristics	Conductor Hot Short Failure Mode Combinations					
			Intra-Cable & Intra-Cable	Intra-Cable & Inter-Cable	Inter-Cable & Inter-Cable	Intra-Cable & Ground Fault Equivalent	Inter-Cable & Ground Fault Equivalent	Aggregate
			1	2	3	4	5	6
Thermoset-Insulated Conductor Cable	1	Alpha	3.90	0.32	Incredible	2.21	Incredible	4.66
		Beta	13.36	109.19		26.64		11.64
		5%	*8.5E-02*	*5.1E-07*		*1.6E-02*		*1.2E-01*
		Mean	**2.3E-01**	**2.9E-03**		**7.7E-02**		**2.9E-01**
		95%	*4.0E-01*	*1.3E-02*		*1.7E-01*		*4.8E-01*
Thermoplastic-Insulated Conductor Cable	2	Alpha	3.90	0.87	0.30	1.80	0.60	4.67
		Beta	13.36	90.66	352.91	24.12	193.16	11.56
		5%	*8.5E-02*	*3.4E-04*	*9.7E-08*	*1.1E-02*	*2.8E-05*	*1.2E-01*
		Mean	**2.3E-01**	**9.5E-03**	**8.6E-04**	**7.0E-02**	**3.1E-03**	**2.9E-01**
		95%	*4.0E-01*	*3.0E-02*	*3.9E-03*	*1.7E-01*	*1.1E-02*	*4.8E-01*
Metal Foil Shield Wrap Cable	3	Alpha	1.06	Incredible	Incredible	1.53	Incredible	1.48
		Beta	2.92			9.16		2.63
		5%	*2.1E-02*			*1.9E-02*		*5.7E-02*
		Mean	**2.7E-01**			**1.4E-01**		**3.6E-01**
		95%	*6.5E-01*			*3.4E-01*		*7.5E-01*
Armored Cable	4	Alpha	4.45	Incredible	Incredible	3.04	Incredible	6.07
		Beta	3.65			5.55		2.60
		5%	*2.7E-01*			*1.2E-01*		*4.3E-01*
		Mean	**5.5E-01**			**3.5E-01**		**7.0E-01**
		95%	*8.1E-01*			*6.3E-01*		*9.1E-01*

5-5

U.S.NRC UNITED STATES NUCLEAR REGULATORY COMMISSION Protecting People and the Environment
EPRI ELECTRIC POWER RESEARCH INSTITUTE

NUREG/CR-7150 Vol. 2

Tables

Table 5-3. Conditional Probability of Spurious Operation: Double Break Control Circuits for Ungrounded AC (w/ individual CPTs) Motor-Operated Valve

Target Cable Configuration		Beta Distribution Characteristics	Conductor Hot Short Failure Mode Combinations			
			Intra-Cable & Intra-Cable	Intra-Cable & Inter-Cable	Inter-Cable & Inter-Cable	Aggregate
			1	2	3	4
Thermoset-Insulated Conductor Cable	1	Alpha	2.96	0.68	Incredible	3.28
		Beta	6.84	9.83		6.10
		5%	*9.8E-02*	*1.1E-03*		*1.3E-01*
		Mean	**3.0E-01**	**6.5E-02**		**3.5E-01**
		95%	*5.5E-01*	*2.1E-01*		*6.1E-01*
Thermoplastic-Insulated Conductor Cable	2	Alpha	2.96	0.34	0.48	2.96
		Beta	6.84	3.85	89.92	5.17
		5%	*9.8E-02*	*3.2E-05*	*1.6E-05*	*1.2E-01*
		Mean	**3.0E-01**	**8.2E-02**	**5.3E-03**	**3.6E-01**
		95%	*5.5E-01*	*3.5E-01*	*2.1E-02*	*6.5E-01*
Metal Foil Shield Wrap Cable	3	Alpha	1.53	0.88	Incredible	2.24
		Beta	5.03	6.43		4.59
		5%	*3.5E-02*	*5.0E-03*		*8.4E-02*
		Mean	**2.3E-01**	**1.2E-01**		**3.3E-01**
		95%	*5.3E-01*	*3.5E-01*		*6.3E-01*
Armored Cable	4	Alpha	1.72	0.86	Incredible	2.40
		Beta	9.20	4.42		5.77
		5%	*2.6E-02*	*6.8E-03*		*7.9E-02*
		Mean	**1.6E-01**	**1.6E-01**		**2.9E-01**
		95%	*3.6E-01*	*4.6E-01*		*5.7E-01*

Note: Inter-cable hot shorts are assumed to involve GFEHS failure modes.

U.S.NRC UNITED STATES NUCLEAR REGULATORY COMMISSION Protecting People and the Environment
EPRI ELECTRIC POWER RESEARCH INSTITUTE

NUREG/CR-7150 Vol. 2

Tables

Table 5-4. Conditional Probability Of Spurious Operation: Double Break Control Circuits Ungrounded DC (or Ungrounded Distributed AC) Motor-Operated Valve

Target Cable Configuration		Beta Distribution Characteristics	Conductor Hot Short Failure Mode Combinations					
			Intra-Cable & Intra-Cable	Intra-Cable & Inter-Cable	Inter-Cable & Inter-Cable	Intra-Cable & Ground Fault Equivalent	Inter-Cable & Ground Fault Equivalent	Aggregate
			1	2	3	4	5	6
Thermoset-Insulated Conductor Cable	1	Alpha	4.11	0.32	Incredible	2.21	Incredible	4.83
		Beta	21.86	109.19		38.98		18.74
		5%	*5.9E-02*	*5.1E-07*		*1.1E-02*		*8.6E-02*
		Mean	**1.6E-01**	**2.9E-03**		**5.4E-02**		**2.0E-01**
		95%	*2.9E-01*	*1.3E-02*		*1.2E-01*		*3.5E-01*
Thermoplastic-Insulated Conductor Cable	2	Alpha	4.11	0.87	0.30	1.81	0.60	4.88
		Beta	21.86	90.66	352.91	35.42	193.16	18.48
		5%	*5.9E-02*	*3.4E-04*	*9.7E-08*	*7.9E-03*	*2.8E-05*	*8.9E-02*
		Mean	**1.6E-01**	**9.5E-03**	**8.6E-04**	**4.9E-02**	**3.1E-03**	**2.1E-01**
		95%	*2.9E-01*	*3.0E-02*	*3.9E-03*	*1.2E-01*	*1.1E-02*	*3.6E-01*
Metal Foil Shield Wrap Cable	3	Alpha	1.19	Incredible	Incredible	1.58	Incredible	1.61
		Beta	5.17			14.13		4.50
		5%	*1.7E-02*			*1.4E-02*		*4.3E-02*
		Mean	**1.9E-01**			**1.0E-01**		**2.6E-01**
		95%	*4.7E-01*			*2.4E-01*		*5.8E-01*
Armored Cable	4	Alpha	6.53	Incredible	Incredible	3.46	Incredible	7.18
		Beta	10.50			10.47		6.31
		5%	*2.0E-01*			*8.7E-02*		*3.1E-01*
		Mean	**3.8E-01**			**2.5E-01**		**5.3E-01**
		95%	*5.8E-01*			*4.5E-01*		*7.5E-01*

5-9

U.S.NRC UNITED STATES NUCLEAR REGULATORY COMMISSION Protecting People and the Environment
EPRI ELECTRIC POWER RESEARCH INSTITUTE

NUREG/CR-7150 Vol. 2

Tables

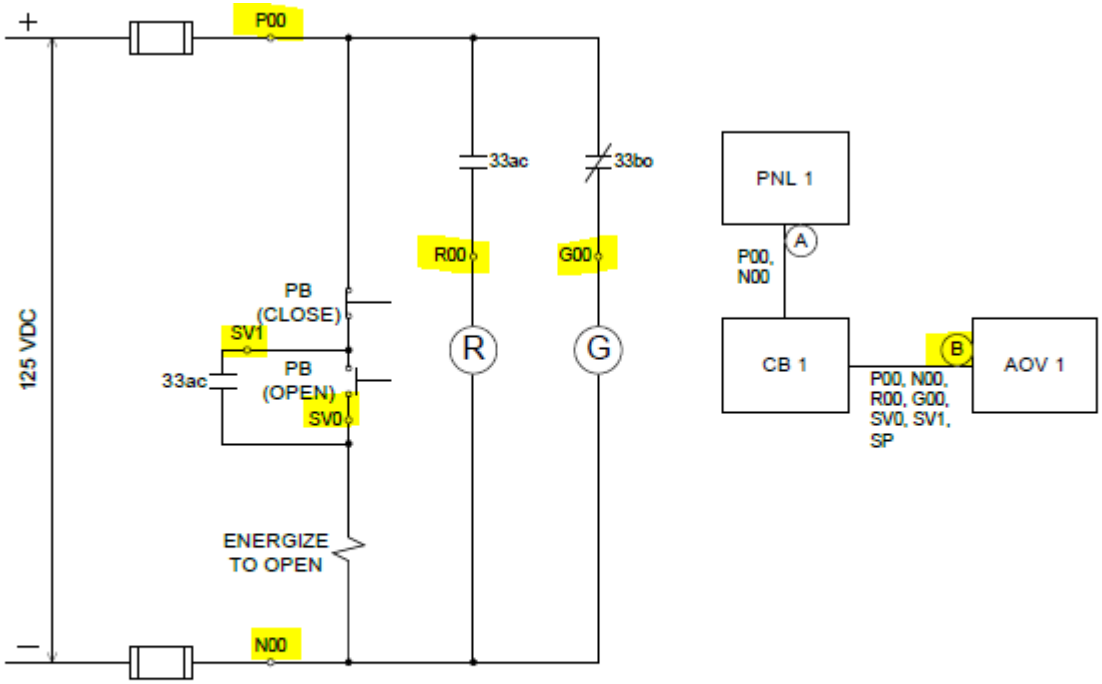

QUESTION: What is the *probability* that damage to Cable B will result in spurious opening of the AOV?

See next slide →

General Example

NUREG/CR-7150 Vol. 2
Tables

- Detailed circuit analysis completed & documented? ***Yes***

Cable	+125 VDC Hot Probe	-125 VDC Reference Ground Probe
A	LOP-FB	LOP-FB
B	LOP-FB, EI-HS, SO-HS	LOP-FB, LOC

- Collect important cable and configuration data:
  - Circuit Design? ***Single Break***
  - Circuit Type? ***SOV***
  - Circuit Grounding/Power source? ***Ungrounded DC bus***
  - Cable Configuration? ***Thermoset-insulated***
  - Cable Configuration? ***Intra, Inter, GFEHS (use Aggregate)***

General Example

U.S.NRC UNITED STATES NUCLEAR REGULATORY COMMISSION Protecting People and the Environment
EPRI ELECTRIC POWER RESEARCH INSTITUTE

NUREG/CR-7150 Vol. 2

Tables

Table 4-1. Conditional Probability of Spurious Operation: SOV Single Break-Control Circuits

Power Supply →			Grounded AC			Ungrounded AC (w/ Individual CPTs)			Ungrounded DC (or Ungrounded Distributed AC)			
			Conductor Hot Short Failure Mode									
Target Cable Configuration		Beta Distribution Characteristics	Intra-Cable	Inter-Cable	Aggregate	Intra-Cable	Inter-Cable	Aggregate	Intra-Cable	Inter-Cable	Ground Fault Equivalent	Aggregate
			1	2	3	4	5	6	7	8	9	10
Thermoset-Insulated Conductor Cable	1	Alpha	8.54	0.36	8.79	4.73	0.60	4.74	10.16	0.32	2.27	12.76
		Beta	11.74	35.25	11.81	2.69	613.31	2.69	11.70	50.01	11.45	10.18
		5%	*2.5E-01*	*4.6E-06*	*2.6E-01*	*3.4E-01*	*8.9E-06*	*3.4E-01*	*2.9E-01*	*1.2E-06*	*3.8E-02*	*3.9E-01*
		Mean	**4.2E-01**	**1.0E-02**	**4.3E-01**	**6.4E-01**	**9.7E-04**	**6.4E-01**	**4.6E-01**	**6.3E-03**	**1.7E-01**	**5.6E-01**
		95%	*6.0E-01*	*4.3E-02*	*6.1E-01*	*8.9E-01*	*3.5E-03*	*8.9E-01*	*6.4E-01*	*2.8E-02*	*3.5E-01*	*7.2E-01*
Thermoplastic-Insulated Conductor Cable	2	Alpha	8.54	0.85	9.19	4.73	0.27	4.86	10.16	0.92	1.83	12.66
		Beta	11.74	32.67	11.90	2.69	17.16	2.71	11.70	44.19	10.36	10.19
		5%	*2.5E-01*	*8.6E-04*	*2.7E-01*	*3.4E-01*	*5.2E-07*	*3.5E-01*	*2.9E-01*	*8.7E-04*	*2.6E-02*	*3.8E-01*
		Mean	**4.2E-01**	**2.5E-02**	**4.4E-01**	**6.4E-01**	**1.5E-02**	**6.4E-01**	**4.6E-01**	**2.0E-02**	**1.5E-01**	**5.5E-01**
		95%	*6.0E-01*	*7.9E-02*	*6.1E-01*	*8.9E-01*	*7.2E-02*	*8.9E-01*	*6.4E-01*	*6.2E-02*	*3.4E-01*	*7.2E-01*
Metal Foil Shield Wrap Cable	3	Alpha	1.22	Incredible	1.22	2.63	Incredible	2.63	2.54	Incredible	1.97	4.68
		Beta	3.77		3.77	2.24		2.24	2.79		4.54	2.69
		5%	*2.5E-02*		*2.5E-02*	*1.9E-01*		*1.9E-01*	*1.6E-01*		*6.7E-02*	*3.4E-01*
		Mean	**2.4E-01**		**2.4E-01**	**5.4E-01**		**5.4E-01**	**4.8E-01**		**3.0E-01**	**6.3E-01**
		95%	*5.9E-01*		*5.9E-01*	*8.7E-01*		*8.7E-01*	*8.1E-01*		*6.1E-01*	*8.9E-01*
Armored Cable	4	Alpha	0.22	Incredible	0.22	4.00	Incredible	4.00	9.82	Incredible	2.77	14.63
		Beta	4.52		4.52	4.93		4.93	3.59		2.97	2.34
		5%	*2.3E-07*		*2.3E-07*	*1.9E-01*		*1.9E-01*	*5.2E-01*		*1.7E-01*	*7.1E-01*
		Mean	**4.7E-02**		**4.7E-02**	**4.5E-01**		**4.5E-01**	**7.3E-01**		**4.8E-01**	**8.6E-01**
		95%	*2.4E-01*		*2.4E-01*	*7.1E-01*		*7.1E-01*	*9.0E-01*		*8.0E-01*	*9.7E-01*

General Example

U.S.NRC UNITED STATES NUCLEAR REGULATORY COMMISSION Protecting People and the Environment
EPRI ELECTRIC POWER RESEARCH INSTITUTE

NUREG/CR-7150, Vol. 2

Durations

- In some cases, the duration of a spurious operation can have a significant effect for a specific PRA scenario.
- Up until now, the duration of a spurious operation have not been considered (i.e., all durations have been assumed to be infinite).
- In many scenarios, the analyst can “live” with the final results without expending the effort to account for duration effects.
- Analysis of the spurious operation duration has several assumptions and limitations that must be understood.
- The mean conditional probability value of the AC floor at 9 minutes is 0.0071 and that of the DC floor at 7 minutes is 0.022.

NUREG/CR-7150 Vol. 2

Duration Tables - AC

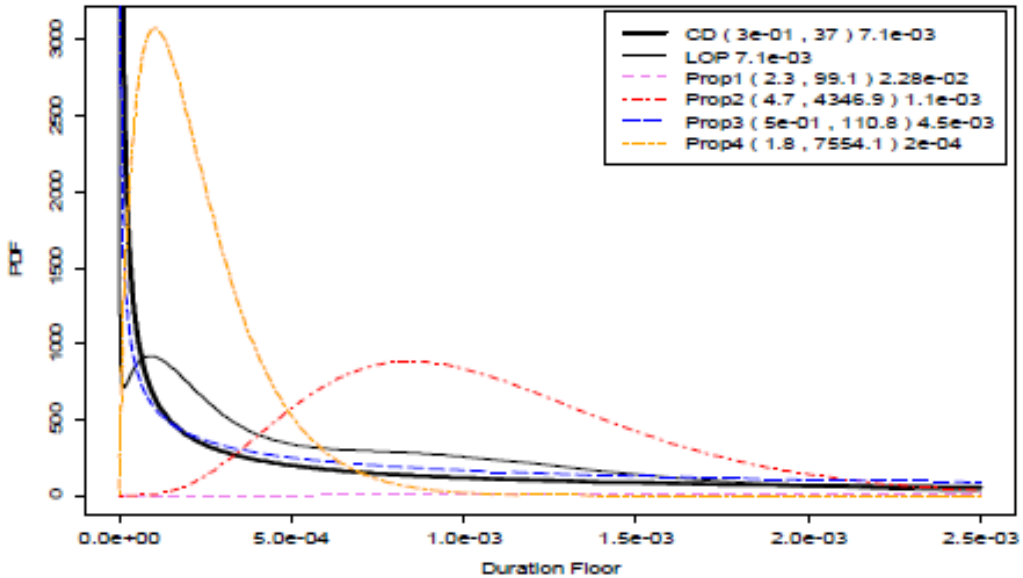

Figure 6-2. Community Distribution for AC Duration Floor

Table 6-2. Duration Conditional Probability Floors with Uncertainties

Beta Distribution Parameter	AC Control Circuits	DC Control Circuits
Alpha	0.27	0.88
Beta	36.99	39.28
5th	*2.4E-07*	*8.2E-04*
Mean	**7.1E-03**	**2.2E-02**
95th	*3.4E-02*	*6.8E-02*

NUREG/CR-7150 Vol. 2

Duration Tables - DC

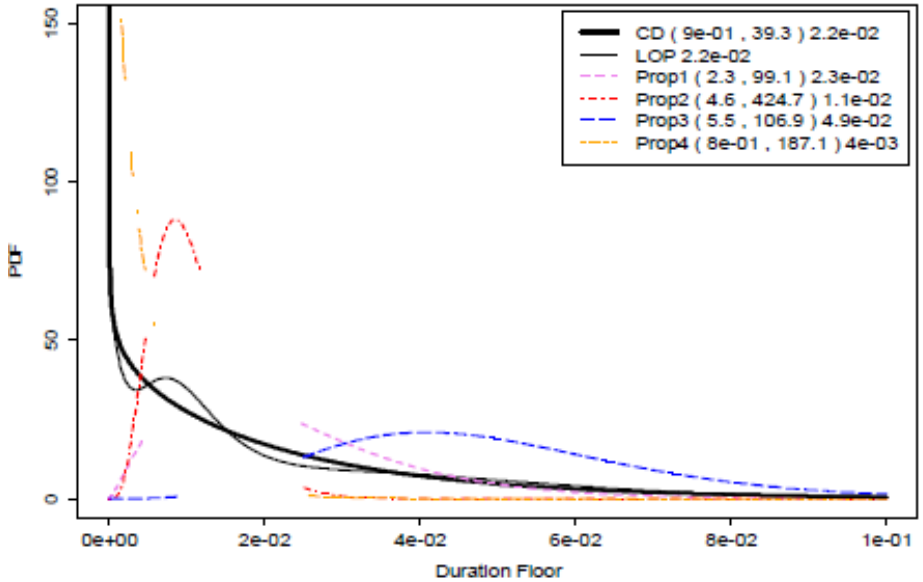

Figure 6-3. Community Distribution for DC Duration Floor

Table 6-2. Duration Conditional Probability Floors with Uncertainties

Beta Distribution Parameter	AC Control Circuits	DC Control Circuits
Alpha	0.27	0.88
Beta	36.99	39.28
5th	*2.4E-07*	*8.2E-04*
Mean	**7.1E-03**	**2.2E-02**
95th	*3.4E-02*	*6.8E-02*

NUREG/CR-7150, Vol. 2

Step 3: Document the Results (NUREG/CR-7150, Vol. 2, Section 7.3.4.3)

- Documentation of the duration analysis should include the supporting documentation for the following three areas:
  - The safe-shutdown function is restored, given the spurious operation clears.
  - The timing analysis is described in Section 7.3.4.1.
  - The duration probability analysis is described in Section 7.3.4.2.
- Documentation for restoring the safe-shutdown function should consider the circuit-specific impact on the component, as well as the circuit-specific impact for clearing of each hot short.

U.S.NRC UNITED STATES NUCLEAR REGULATORY COMMISSION Protecting People and the Environment
EPRI ELECTRIC POWER RESEARCH INSTITUTE

NUREG/CR-7150, Vol. 2

Step 3: Document the Results (NUREG/CR-7150, Vol. 2, Sections 7.3.4.3, 7.3.6)

- CF analysis and duration should be performed in accordance with the fire PRA plan similar to that discussed in NUREG/CR-6850, Section 10.5.4.
- During this process, the uncertainty values also are developed, and should be documented as an integral part of the analysis. The standard State-of-Knowledge-Correlation (SOKC) employed when the underlying failure data are based on common data sets needs to be evaluated and any increase in the mean value relative to the point or best estimate reported (along with the uncertainty range).
- Documentation should also include a discussion on the assumptions as well as the sources of uncertainty.

U.S.NRC UNITED STATES NUCLEAR REGULATORY COMMISSION Protecting People and the Environment
EPRI ELECTRIC POWER RESEARCH INSTITUTE

U.S.NRC
UNITED STATES NUCLEAR REGULATORY COMMISSION
Protecting People and the Environment

EPRI | ELECTRIC POWER RESEARCH INSTITUTE

Application of NUREG/CR-7150 Vol. 2

Application in the Fire PRA

- Aggregation of cable failures on a cable level is already addressed in NUREG/CR-7150 Vol. 2 and previous slides
- Multiple cables for a given component/BE, if failed, could result in the spurious operation of a component
- Some cables may be from the same power source/protective device (e.g., dc fuses/breakers, same CPT control power source)
- Others may be from different power supplies/sources (e.g., “off scheme” cables, automatic initiation logic cables)
- Summing probabilities as independent variables [FAQ 08-0047 (NUREG/CR-6850, Supplement 1, Chapter 15)] is overly conservative (exclusive “OR” arrangement)
- NUREG/CR-7150, Vol. 2 does include in its methodology a requirement to sum cable probabilities

U.S.NRC UNITED STATES NUCLEAR REGULATORY COMMISSION Protecting People and the Environment
EPRI ELECTRIC POWER RESEARCH INSTITUTE

Application in the Fire PRA

Fault Tree Modeling
(Example Configuration)

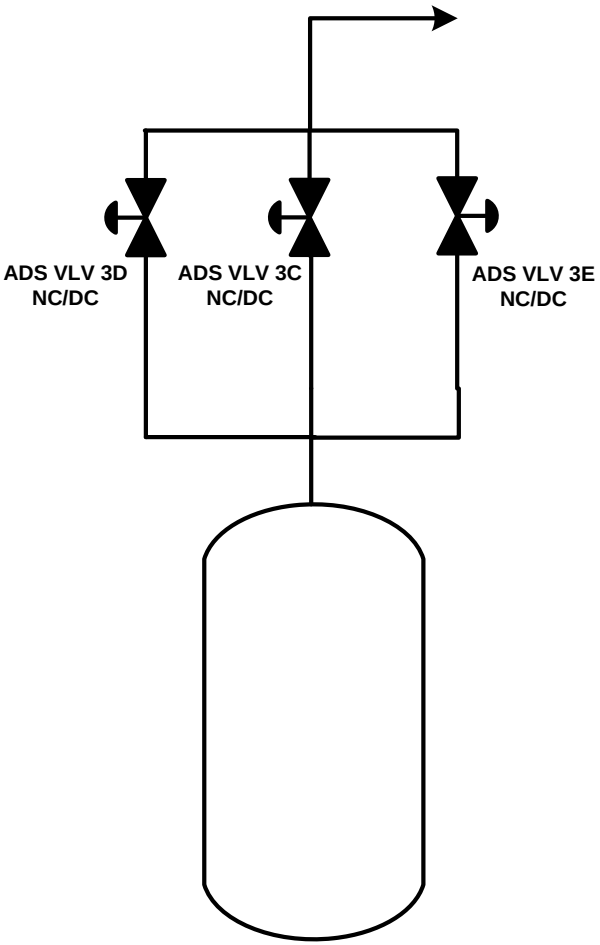

Application in the Fire PRA

Fault Tree Modeling (spurious operation probability)

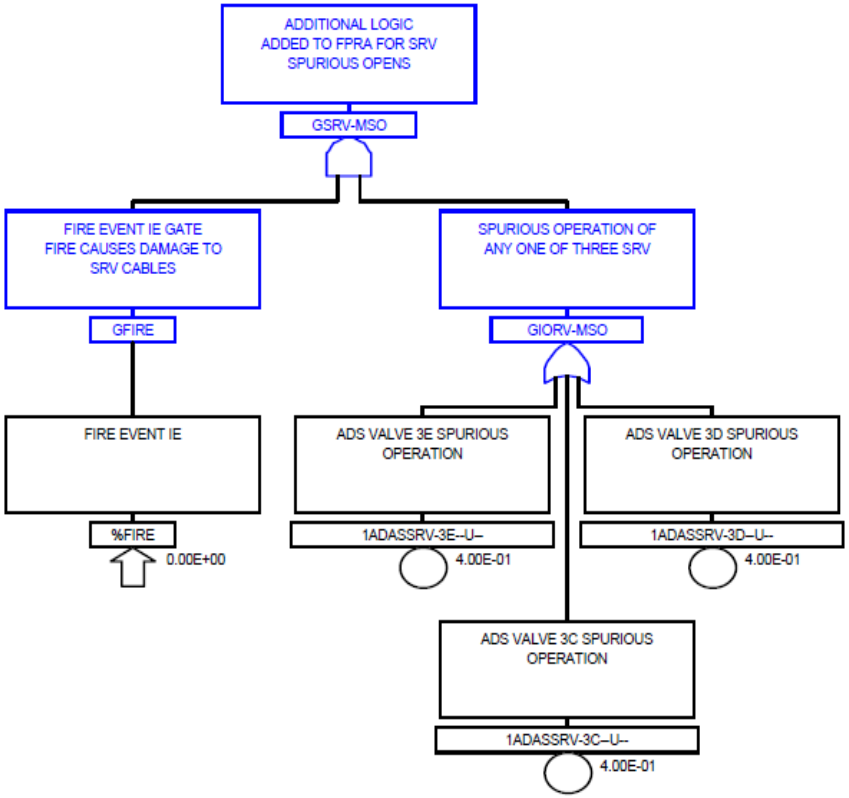

Application in the Fire PRA

Fault Tree Modeling (spurious operation probability & duration)

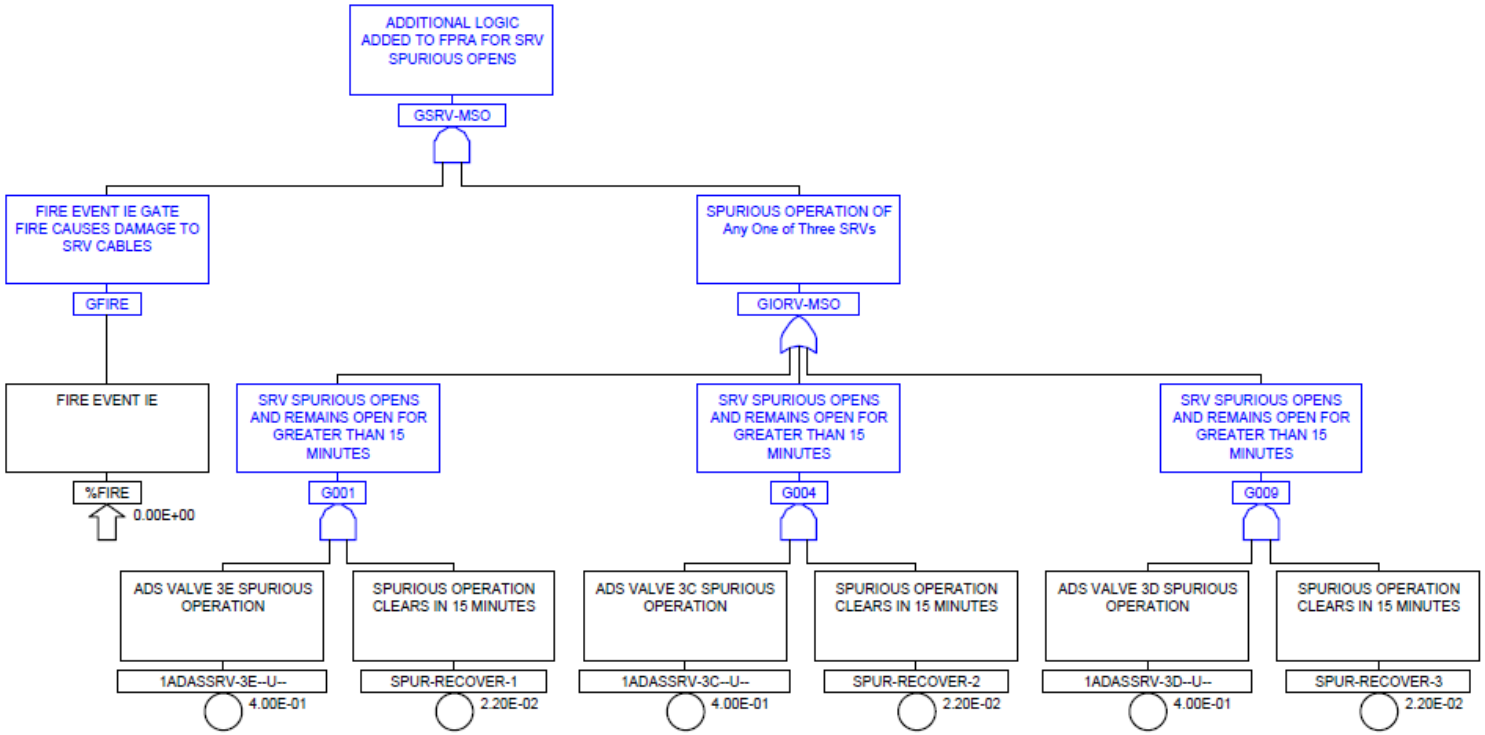

NUREG/CR-7150, Vol. 2
Additional Insights and Lessons Learned

PRA Panel – Other Cable Configurations

- Panel Wiring (control cabling within electrical panels as opposed to cables routed in cable trays/conduit) - Considering the lack of applicable test data and the potential risk importance of panel wiring, the PRA panel recommends using **aggregate** values in the tables in Sections 4 and 5.
- Trunk Cables (term used to describe cables containing a large number of conductors, e.g., 37/C, common in certain NPP applications) - Because of this dearth of data, the PRA panel recommends using the **aggregate** values to quantify trunk cable conditional spurious operation estimates**.**
- Instrument Cables – probability values should not be used.

[NUREG/CR-7150, Vol. 2, Section 7.4]

U.S.NRC UNITED STATES NUCLEAR REGULATORY COMMISSION Protecting People and the Environment
EPRI ELECTRIC POWER RESEARCH INSTITUTE

CFMLA Data Input

- Failure Mode
- Single or Double Break Circuit
- SOV, MOV, Breaker
- Grounded, Ungrounded
- AC or DC
- TS, TP, Armored, Foil Shielded
- Database that is created can be integrated in to current FSS database.

U.S.NRC UNITED STATES NUCLEAR REGULATORY COMMISSION Protecting People and the Environment
EPRI ELECTRIC POWER RESEARCH INSTITUTE

EXAMPLES

EXAMPLES

Circuits for Analysis

- Solenoid Operated Valves (SOVs)
- Motor Operated Valves (MOVs)
- Power Circuit Breaker Controls

Examples

SOVs

Table 4-1. Conditional Probability of Spurious Operation: SOV Single Break-Control Circuits

Power Supply →			Grounded AC			Ungrounded AC (w/ Individual CPTs)			Ungrounded DC (or Ungrounded Distributed AC)			
			Conductor Hot Short Failure Mode									
Target Cable Configuration		Beta Distribution Characteristics	Intra-Cable	Inter-Cable	Aggregate	Intra-Cable	Inter-Cable	Aggregate	Intra-Cable	Inter-Cable	Ground Fault Equivalent	Aggregate
			1	2	3	4	5	6	7	8	9	10
Thermoset-Insulated Conductor Cable	1	Alpha	8.54	0.36	8.79	4.73	0.60	4.74	10.16	0.32	2.27	12.76
		Beta	11.74	35.25	11.81	2.69	613.31	2.69	11.70	50.01	11.45	10.18
		5%	*2.5E-01*	*4.6E-06*	*2.6E-01*	*3.4E-01*	*8.9E-06*	*3.4E-01*	*2.9E-01*	*1.2E-06*	*3.8E-02*	*3.9E-01*
		Mean	**4.2E-01**	**1.0E-02**	**4.3E-01**	**6.4E-01**	**9.7E-04**	**6.4E-01**	**4.6E-01**	**6.3E-03**	**1.7E-01**	**5.6E-01**
		95%	*6.0E-01*	*4.3E-02*	*6.1E-01*	*8.9E-01*	*3.5E-03*	*8.9E-01*	*6.4E-01*	*2.8E-02*	*3.5E-01*	*7.2E-01*
Thermoplastic-Insulated Conductor Cable	2	Alpha	8.54	0.85	9.19	4.73	0.27	4.86	10.16	0.92	1.83	12.66
		Beta	11.74	32.67	11.90	2.69	17.16	2.71	11.70	44.19	10.36	10.19
		5%	*2.5E-01*	*8.6E-04*	*2.7E-01*	*3.4E-01*	*5.2E-07*	*3.5E-01*	*2.9E-01*	*8.7E-04*	*2.6E-02*	*3.8E-01*
		Mean	**4.2E-01**	**2.5E-02**	**4.4E-01**	**6.4E-01**	**1.5E-02**	**6.4E-01**	**4.6E-01**	**2.0E-02**	**1.5E-01**	**5.5E-01**
		95%	*6.0E-01*	*7.9E-02*	*6.1E-01*	*8.9E-01*	*7.2E-02*	*8.9E-01*	*6.4E-01*	*6.2E-02*	*3.4E-01*	*7.2E-01*
Metal Foil Shield Wrap Cable	3	Alpha	1.22	Incredible	1.22	2.63	Incredible	2.63	2.54	Incredible	1.97	4.68
		Beta	3.77		3.77	2.24		2.24	2.79		4.54	2.69
		5%	*2.5E-02*		*2.5E-02*	*1.9E-01*		*1.9E-01*	*1.6E-01*		*6.7E-02*	*3.4E-01*
		Mean	**2.4E-01**		**2.4E-01**	**5.4E-01**		**5.4E-01**	**4.8E-01**		**3.0E-01**	**6.3E-01**
		95%	*5.9E-01*		*5.9E-01*	*8.7E-01*		*8.7E-01*	*8.1E-01*		*6.1E-01*	*8.9E-01*
Armored Cable	4	Alpha	0.22	Incredible	0.22	4.00	Incredible	4.00	9.82	Incredible	2.77	14.63
		Beta	4.52		4.52	4.93		4.93	3.59		2.97	2.34
		5%	*2.3E-07*		*2.3E-07*	*1.9E-01*		*1.9E-01*	*5.2E-01*		*1.7E-01*	*7.1E-01*
		Mean	**4.7E-02**		**4.7E-02**	**4.5E-01**		**4.5E-01**	**7.3E-01**		**4.8E-01**	**8.6E-01**
		95%	*2.4E-01*		*2.4E-01*	*7.1E-01*		*7.1E-01*	*9.0E-01*		*8.0E-01*	*9.7E-01*

U.S.NRC UNITED STATES NUCLEAR REGULATORY COMMISSION Protecting People and the Environment
EPRI ELECTRIC POWER RESEARCH INSTITUTE

Examples

SOVs (Continued)

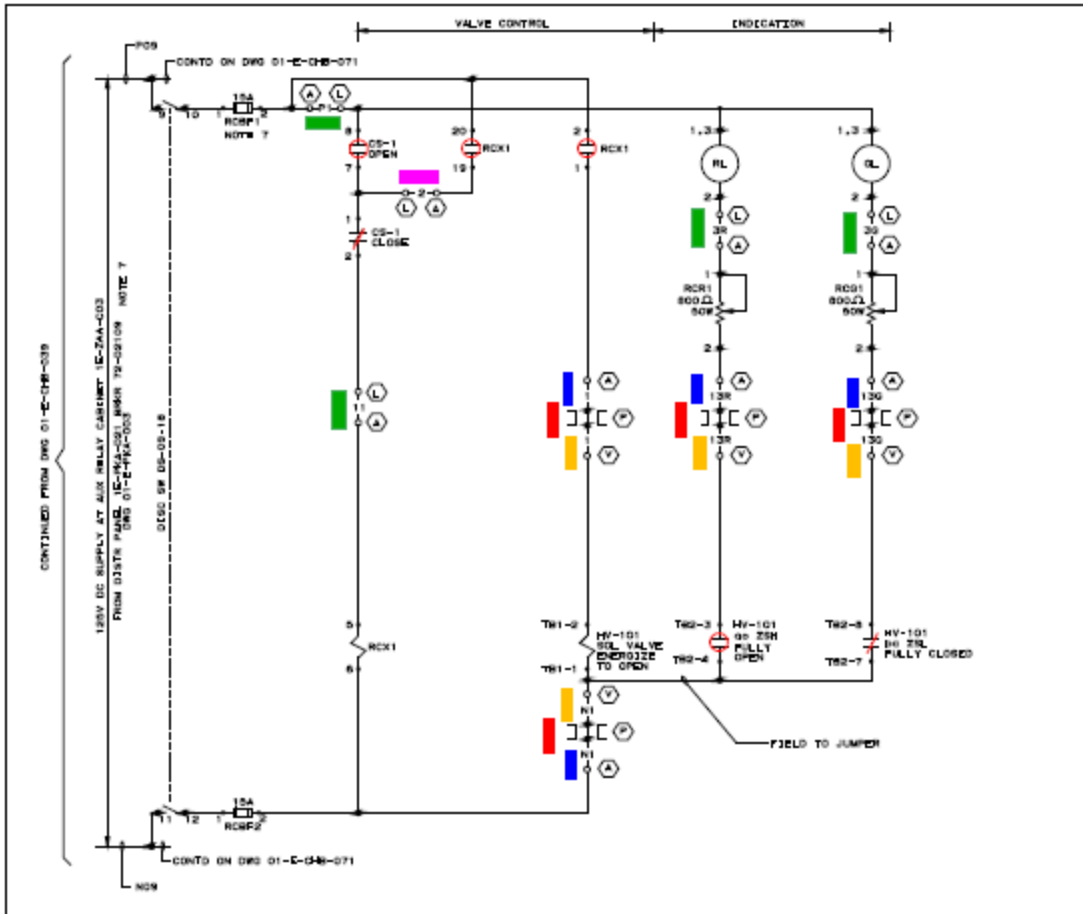

Rx Coolant Vent Valve

Examples

MOVs

Table 4-3. Conditional Probability of Spurious Operation: MOV Single Break Control Circuits

Power Supply →			Grounded AC			Ungrounded AC (w/ Individual CPTs)			Ungrounded DC (or Ungrounded Distributed AC)			
			Conductor Hot Short Failure Mode									
Target Cable Configuration		Beta Distribution Characteristics	Intra-Cable	Inter-Cable	Aggregate	Intra-Cable	Inter-Cable	Aggregate	Intra-Cable	Inter-Cable	Ground Fault Equivalent	Aggregate
			1	2	3	4	5	6	7	8	9	10
Thermoset-Insulated Conductor Cable	1	Alpha	5.55	0.36	5.80	4.81	0.58	4.81	5.53	0.32	1.93	7.65
		Beta	14.98	40.31	15.16	7.69	687.61	7.68	12.03	56.43	14.97	11.63
		5%	*1.3E-01*	*4.1E-06*	*1.3E-01*	*1.8E-01*	*7.1E-06*	*1.8E-01*	*1.5E-01*	*1.0E-06*	*2.1E-02*	*2.2E-01*
		Mean	**2.7E-01**	**8.8E-03**	**2.8E-01**	**3.8E-01**	**8.5E-04**	**3.9E-01**	**3.1E-01**	**5.6E-03**	**1.1E-01**	**4.0E-01**
		95%	*4.4E-01*	*3.8E-02*	*4.5E-01*	*6.1E-01*	*3.1E-03*	*6.1E-01*	*5.0E-01*	*2.5E-02*	*2.6E-01*	*5.8E-01*
Thermoplastic-Insulated Conductor Cable	2	Alpha	5.55	0.84	6.20	4.81	0.27	5.02	5.53	0.91	1.50	7.58
		Beta	14.98	37.19	15.43	7.69	19.75	7.75	12.03	49.25	13.25	11.55
		5%	*1.3E-01*	*7.2E-04*	*1.4E-01*	*1.8E-01*	*4.5E-07*	*1.9E-01*	*1.5E-01*	*7.4E-04*	*1.3E-02*	*2.2E-01*
		Mean	**2.7E-01**	**2.2E-02**	**2.9E-01**	**3.8E-01**	**1.3E-02**	**3.9E-01**	**3.1E-01**	**1.8E-02**	**1.0E-01**	**4.0E-01**
		95%	*4.4E-01*	*7.0E-02*	*4.5E-01*	*6.1E-01*	*6.3E-02*	*6.2E-01*	*5.0E-01*	*5.6E-02*	*2.5E-01*	*5.8E-01*
Metal Foil Shield Wrap Cable	3	Alpha	1.20	Incredible	1.20	3.64	Incredible	3.64	2.62	Incredible	2.11	4.85
		Beta	6.15		6.15	6.15		6.15	5.95		7.41	5.72
		5%	*1.5E-02*		*1.5E-02*	*1.5E-01*		*1.5E-01*	*8.9E-02*		*4.9E-02*	*2.2E-01*
		Mean	**1.6E-01**		**1.6E-01**	**3.7E-01**		**3.7E-01**	**3.1E-01**		**2.2E-01**	**4.6E-01**
		95%	*4.2E-01*		*4.2E-01*	*6.3E-01*		*6.3E-01*	*5.8E-01*		*4.6E-01*	*7.1E-01*
Armored Cable	4	Alpha	0.21	Incredible	0.21	3.76	Incredible	3.76	7.52	Incredible	3.10	10.97
		Beta	5.94		5.94	10.05		10.05	9.24		7.72	7.12
		5%	*6.7E-08*		*6.7E-08*	*1.0E-01*		*1.0E-01*	*2.6E-01*		*9.5E-02*	*4.2E-01*
		Mean	**3.4E-02**		**3.4E-02**	**2.7E-01**		**2.7E-01**	**4.5E-01**		**2.9E-01**	**6.1E-01**
		95%	*1.7E-01*		*1.7E-01*	*4.8E-01*		*4.8E-01*	*6.5E-01*		*5.2E-01*	*7.8E-01*

U.S.NRC UNITED STATES NUCLEAR REGULATORY COMMISSION Protecting People and the Environment
EPRI ELECTRIC POWER RESEARCH INSTITUTE

Examples
MOVs (Cont.)

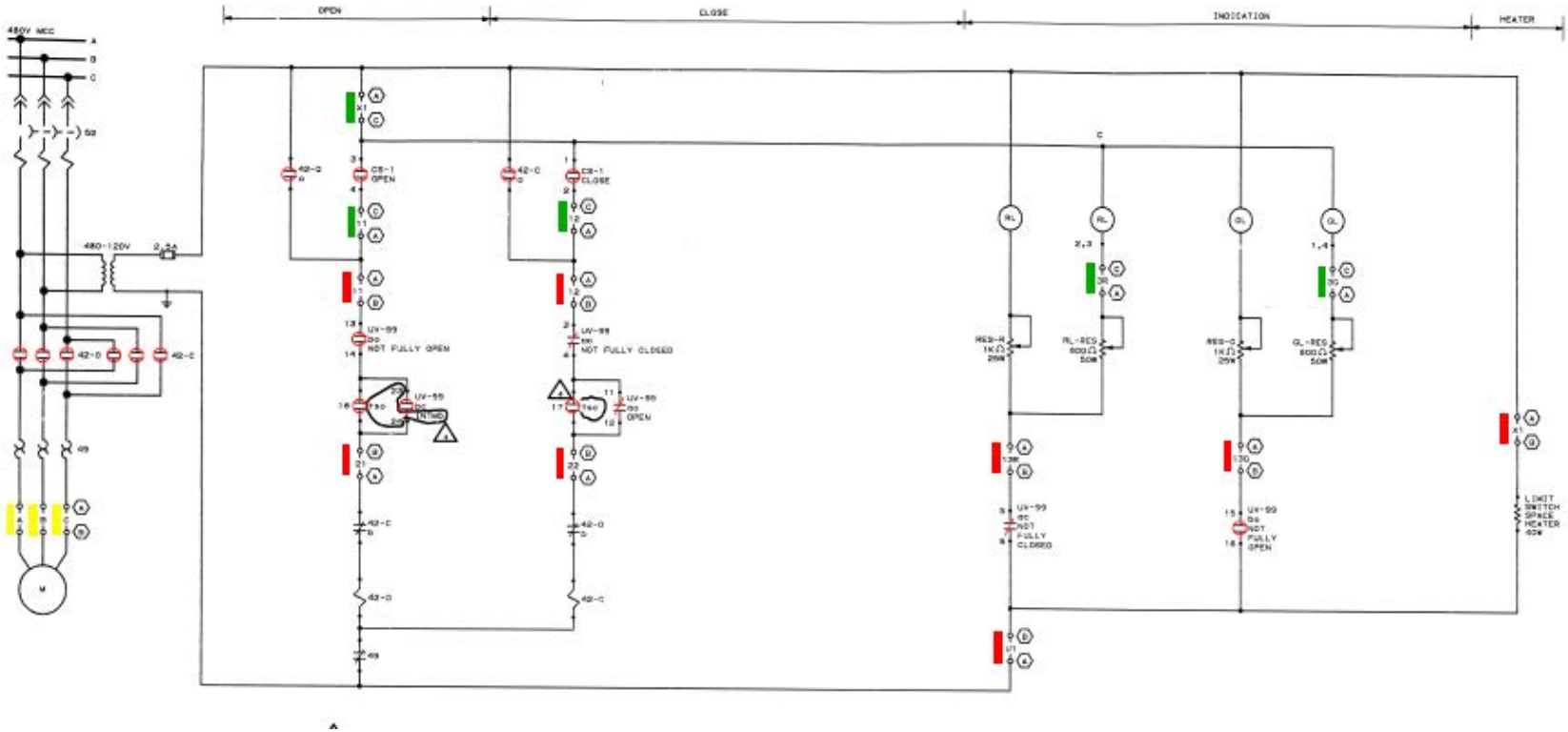

CCW Motor Operated Valve

U.S.NRC UNITED STATES NUCLEAR REGULATORY COMMISSION Protecting People and the Environment
EPRI ELECTRIC POWER RESEARCH INSTITUTE

Examples
Breaker Controls

Table 4-4. Conditional Probability of Spurious Operation: Ungrounded DC Control Circuits for Medium Voltage Circuit Breaker

Characteristics of Beta Distribution	Probability Value
Alpha	5.54
Beta	8.47
5%	*2.0E-01*
Mean	**4.0E-01**
95%	*6.1E-01*

U.S.NRC UNITED STATES NUCLEAR REGULATORY COMMISSION Protecting People and the Environment
EPRI ELECTRIC POWER RESEARCH INSTITUTE

Examples

Breaker Controls

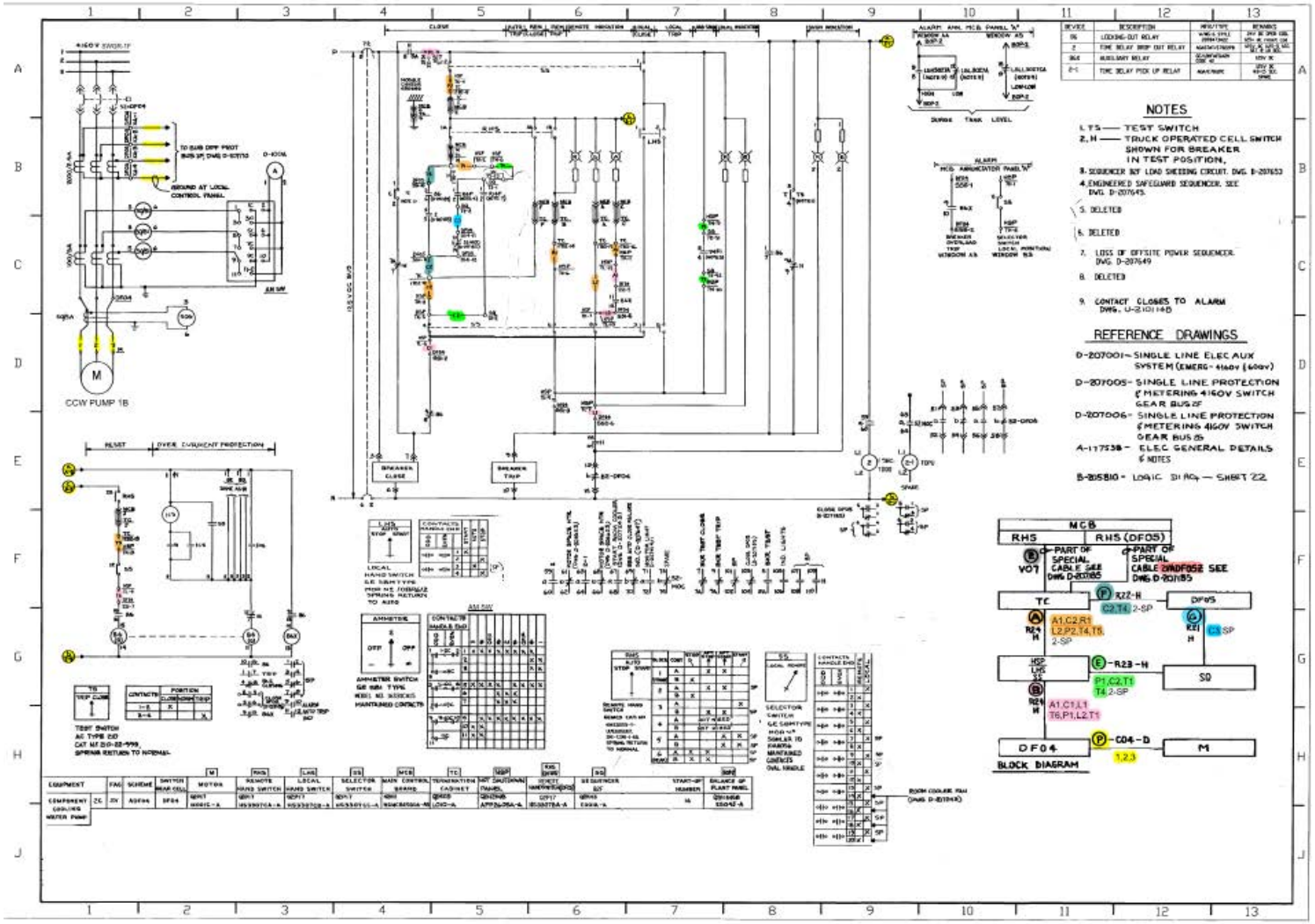

4.16 kV Circuit Breaker Control Scheme

Generic Examples

NUREG/CR-7150 Vol. 2

CFMLA
General Example

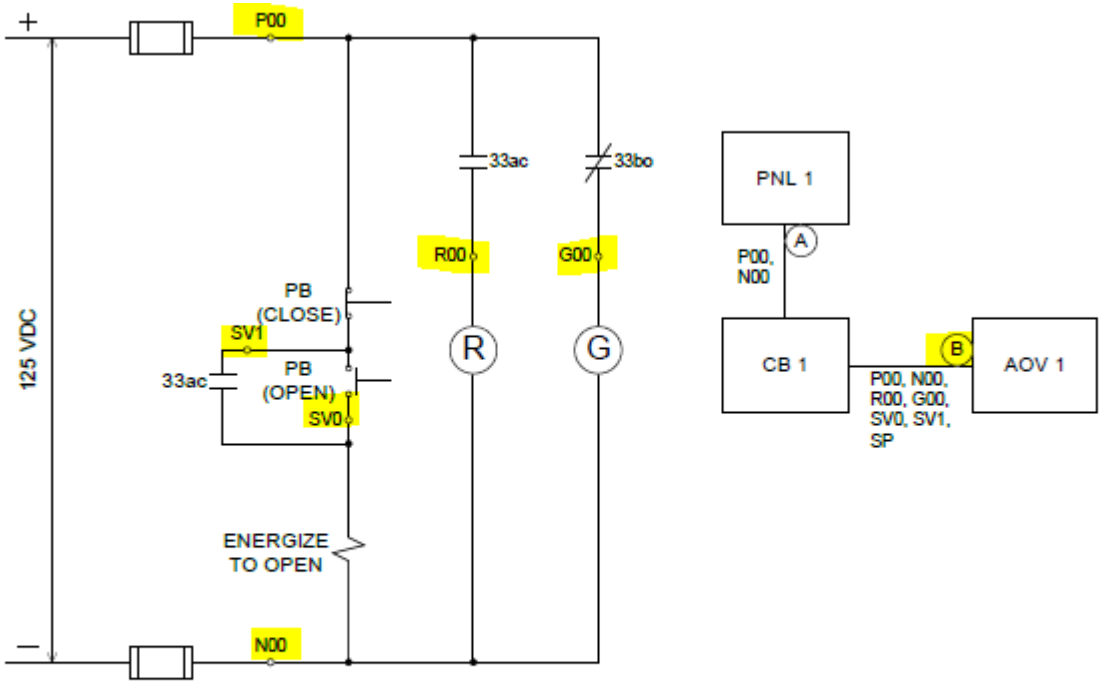

QUESTION: What is the *probability* that damage to Cable B will result in spurious opening of the AOV?

See next slide →

General Example

CFMLA
General Example Solution

- Detailed circuit analysis completed & documented? ***Yes***

Cable	+125 VDC Hot Probe	-125 VDC Reference Ground Probe
A	LOP-FB	LOP-FB
B	LOP-FB, EI-HS, SO-HS	LOP-FB, LOC

- Collect important cable and configuration data:
  - Circuit Design? ***Single Break***
  - Circuit Type? ***SOV***
  - Circuit Grounding/Power source? ***Ungrounded DC bus***
  - Cable Configuration? ***Thermoset-insulated***
  - Cable Configuration? ***Intra, Inter, GFEHS (use Aggregate)***

General Example

U.S.NRC UNITED STATES NUCLEAR REGULATORY COMMISSION Protecting People and the Environment
EPRI ELECTRIC POWER RESEARCH INSTITUTE

NUREG/CR-7150 Vol. 2

General Example Solution Table

Table 4-1. Conditional Probability of Spurious Operation: SOV Single Break-Control Circuits

Power Supply →			Grounded AC			Ungrounded AC (w/ Individual CPTs)			Ungrounded DC (or Ungrounded Distributed AC)			
			Conductor Hot Short Failure Mode									
Target Cable Configuration		Beta Distribution Characteristics	Intra-Cable	Inter-Cable	Aggregate	Intra-Cable	Inter-Cable	Aggregate	Intra-Cable	Inter-Cable	Ground Fault Equivalent	Aggregate
			1	2	3	4	5	6	7	8	9	10
Thermoset-Insulated Conductor Cable	1	Alpha	8.54	0.36	8.79	4.73	0.60	4.74	10.16	0.32	2.27	12.76
		Beta	11.74	35.25	11.81	2.69	613.31	2.69	11.70	50.01	11.45	10.18
		5%	*2.5E-01*	*4.6E-06*	*2.6E-01*	*3.4E-01*	*8.9E-06*	*3.4E-01*	*2.9E-01*	*1.2E-06*	*3.8E-02*	*3.9E-01*
		Mean	**4.2E-01**	**1.0E-02**	**4.3E-01**	**6.4E-01**	**9.7E-04**	**6.4E-01**	**4.6E-01**	**6.3E-03**	**1.7E-01**	**5.6E-01**
		95%	*6.0E-01*	*4.3E-02*	*6.1E-01*	*8.9E-01*	*3.5E-03*	*8.9E-01*	*6.4E-01*	*2.8E-02*	*3.5E-01*	*7.2E-01*
Thermoplastic-Insulated Conductor Cable	2	Alpha	8.54	0.85	9.19	4.73	0.27	4.86	10.16	0.92	1.83	12.66
		Beta	11.74	32.67	11.90	2.69	17.16	2.71	11.70	44.19	10.36	10.19
		5%	*2.5E-01*	*8.6E-04*	*2.7E-01*	*3.4E-01*	*5.2E-07*	*3.5E-01*	*2.9E-01*	*8.7E-04*	*2.6E-02*	*3.8E-01*
		Mean	**4.2E-01**	**2.5E-02**	**4.4E-01**	**6.4E-01**	**1.5E-02**	**6.4E-01**	**4.6E-01**	**2.0E-02**	**1.5E-01**	**5.5E-01**
		95%	*6.0E-01*	*7.9E-02*	*6.1E-01*	*8.9E-01*	*7.2E-02*	*8.9E-01*	*6.4E-01*	*6.2E-02*	*3.4E-01*	*7.2E-01*
Metal Foil Shield Wrap Cable	3	Alpha	1.22	Incredible	1.22	2.63	Incredible	2.63	2.54	Incredible	1.97	4.68
		Beta	3.77		3.77	2.24		2.24	2.79		4.54	2.69
		5%	*2.5E-02*		*2.5E-02*	*1.9E-01*		*1.9E-01*	*1.6E-01*		*6.7E-02*	*3.4E-01*
		Mean	**2.4E-01**		**2.4E-01**	**5.4E-01**		**5.4E-01**	**4.8E-01**		**3.0E-01**	**6.3E-01**
		95%	*5.9E-01*		*5.9E-01*	*8.7E-01*		*8.7E-01*	*8.1E-01*		*6.1E-01*	*8.9E-01*
Armored Cable	4	Alpha	0.22	Incredible	0.22	4.00	Incredible	4.00	9.82	Incredible	2.77	14.63
		Beta	4.52		4.52	4.93		4.93	3.59		2.97	2.34
		5%	*2.3E-07*		*2.3E-07*	*1.9E-01*		*1.9E-01*	*5.2E-01*		*1.7E-01*	*7.1E-01*
		Mean	**4.7E-02**		**4.7E-02**	**4.5E-01**		**4.5E-01**	**7.3E-01**		**4.8E-01**	**8.6E-01**
		95%	*2.4E-01*		*2.4E-01*	*7.1E-01*		*7.1E-01*	*9.0E-01*		*8.0E-01*	*9.7E-01*

General Example

U.S.NRC UNITED STATES NUCLEAR REGULATORY COMMISSION Protecting People and the Environment
EPRI ELECTRIC POWER RESEARCH INSTITUTE

NUREG/CR-7150 Vol. 2

Example 1

- MOV control circuit
- Normally closed desired closed valve
- Control cable X could cause spurious opening
- Single break design
- 120 vac grounded, thermoset cable
- Fire-induced cable spurious operation could occur from both an intra and inter-cable hot short

NUREG/CR-7150 Vol. 2

Example 1 Solution Table

Table 4-3. Conditional Probability of Spurious Operation: MOV Single Break Control Circuits

Power Supply →			Grounded AC			Ungrounded AC (w/ Individual CPTs)			Ungrounded DC (or Ungrounded Distributed AC)			
			Conductor Hot Short Failure Mode									
Target Cable Configuration		Beta Distribution Characteristics	Intra-Cable	Inter-Cable	Aggregate	Intra-Cable	Inter-Cable	Aggregate	Intra-Cable	Inter-Cable	Ground Fault Equivalent	Aggregate
			1	2	3	4	5	6	7	8	9	10
Thermoset-Insulated Conductor Cable	1	Alpha	5.55	0.36	5.80	4.81	0.58	4.81	5.53	0.32	1.93	7.65
		Beta	14.98	40.31	15.16	7.69	687.61	7.68	12.03	56.43	14.97	11.63
		5%	*1.3E-01*	*4.1E-06*	*1.3E-01*	*1.8E-01*	*7.1E-06*	*1.8E-01*	*1.5E-01*	*1.0E-06*	*2.1E-02*	*2.2E-01*
		Mean	**2.7E-01**	**8.8E-03**	**2.8E-01**	**3.8E-01**	**8.5E-04**	**3.9E-01**	**3.1E-01**	**5.6E-03**	**1.1E-01**	**4.0E-01**
		95%	*4.4E-01*	*3.8E-02*	*4.5E-01*	*6.1E-01*	*3.1E-03*	*6.1E-01*	*5.0E-01*	*2.5E-02*	*2.6E-01*	*5.8E-01*
Thermoplastic-Insulated Conductor Cable	2	Alpha	5.55	0.84	6.20	4.81	0.27	5.02	5.53	0.91	1.50	7.58
		Beta	14.98	37.19	15.43	7.69	19.75	7.75	12.03	49.25	13.25	11.55
		5%	*1.3E-01*	*7.2E-04*	*1.4E-01*	*1.8E-01*	*4.5E-07*	*1.9E-01*	*1.5E-01*	*7.4E-04*	*1.3E-02*	*2.2E-01*
		Mean	**2.7E-01**	**2.2E-02**	**2.9E-01**	**3.8E-01**	**1.3E-02**	**3.9E-01**	**3.1E-01**	**1.8E-02**	**1.0E-01**	**4.0E-01**
		95%	*4.4E-01*	*7.0E-02*	*4.5E-01*	*6.1E-01*	*6.3E-02*	*6.2E-01*	*5.0E-01*	*5.6E-02*	*2.5E-01*	*5.8E-01*
Metal Foil Shield Wrap Cable	3	Alpha	1.20	Incredible	1.20	3.64	Incredible	3.64	2.62	Incredible	2.11	4.85
		Beta	6.15		6.15	6.15		6.15	5.95		7.41	5.72
		5%	*1.5E-02*		*1.5E-02*	*1.5E-01*		*1.5E-01*	*8.9E-02*		*4.9E-02*	*2.2E-01*
		Mean	**1.6E-01**		**1.6E-01**	**3.7E-01**		**3.7E-01**	**3.1E-01**		**2.2E-01**	**4.6E-01**
		95%	*4.2E-01*		*4.2E-01*	*6.3E-01*		*6.3E-01*	*5.8E-01*		*4.6E-01*	*7.1E-01*
Armored Cable	4	Alpha	0.21	Incredible	0.21	3.76	Incredible	3.76	7.52	Incredible	3.10	10.97
		Beta	5.94		5.94	10.05		10.05	9.24		7.72	7.12
		5%	*6.7E-08*		*6.7E-08*	*1.0E-01*		*1.0E-01*	*2.6E-01*		*9.5E-02*	*4.2E-01*
		Mean	**3.4E-02**		**3.4E-02**	**2.7E-01**		**2.7E-01**	**4.5E-01**		**2.9E-01**	**6.1E-01**
		95%	*1.7E-01*		*1.7E-01*	*4.8E-01*		*4.8E-01*	*6.5E-01*		*5.2E-01*	*7.8E-01*

Example #1

U.S.NRC UNITED STATES NUCLEAR REGULATORY COMMISSION Protecting People and the Environment
EPRI ELECTRIC POWER RESEARCH INSTITUTE

NUREG/CR-7150 Vol. 2

Example 2

- MOV control circuit
- Normally open, desired open valve
- Control cable X could cause spurious closing
- Single break design
- 120 vac grounded, thermoplastic cable
- Fire-induced cable spurious operation could occur from only an inter-cable hot short (there are no intra-cable hot short “source” conductors in Cable X)

U.S.NRC UNITED STATES NUCLEAR REGULATORY COMMISSION Protecting People and the Environment
EPRI ELECTRIC POWER RESEARCH INSTITUTE

NUREG/CR-7150 Vol. 2

Example 2 Solution Table

Table 4-3. Conditional Probability of Spurious Operation: MOV Single Break Control Circuits

Power Supply →			Grounded AC			Ungrounded AC (w/ Individual CPTs)			Ungrounded DC (or Ungrounded Distributed AC)			
			Conductor Hot Short Failure Mode									
Target Cable Configuration		Beta Distribution Characteristics	Intra-Cable	Inter-Cable	Aggregate	Intra-Cable	Inter-Cable	Aggregate	Intra-Cable	Inter-Cable	Ground Fault Equivalent	Aggregate
			1	2	3	4	5	6	7	8	9	10
Thermoset-Insulated Conductor Cable	1	Alpha	5.55	0.36	5.80	4.81	0.58	4.81	5.53	0.32	1.93	7.65
		Beta	14.98	40.31	15.16	7.69	687.61	7.68	12.03	56.43	14.97	11.63
		5%	*1.3E-01*	*4.1E-06*	*1.3E-01*	*1.8E-01*	*7.1E-06*	*1.8E-01*	*1.5E-01*	*1.0E-06*	*2.1E-02*	*2.2E-01*
		Mean	**2.7E-01**	**8.8E-03**	**2.8E-01**	**3.8E-01**	**8.5E-04**	**3.9E-01**	**3.1E-01**	**5.6E-03**	**1.1E-01**	**4.0E-01**
		95%	*4.4E-01*	*3.8E-02*	*4.5E-01*	*6.1E-01*	*3.1E-03*	*6.1E-01*	*5.0E-01*	*2.5E-02*	*2.6E-01*	*5.8E-01*
Thermoplastic-Insulated Conductor Cable	2	Alpha	5.55	0.84	6.20	4.81	0.27	5.02	5.53	0.91	1.50	7.58
		Beta	14.98	37.19	15.43	7.69	19.75	7.75	12.03	49.25	13.25	11.55
		5%	*1.3E-01*	*7.2E-04*	*1.4E-01*	*1.8E-01*	*4.5E-07*	*1.9E-01*	*1.5E-01*	*7.4E-04*	*1.3E-02*	*2.2E-01*
		Mean	**2.7E-01**	**2.2E-02**	**2.9E-01**	**3.8E-01**	**1.3E-02**	**3.9E-01**	**3.1E-01**	**1.8E-02**	**1.0E-01**	**4.0E-01**
		95%	*4.4E-01*	*7.0E-02*	*4.5E-01*	*6.1E-01*	*6.3E-02*	*6.2E-01*	*5.0E-01*	*5.6E-02*	*2.5E-01*	*5.8E-01*
Metal Foil Shield Wrap Cable	3	Alpha	1.20	Incredible	1.20	3.64	Incredible	3.64	2.62	Incredible	2.11	4.85
		Beta	6.15		6.15	6.15		6.15	5.95		7.41	5.72
		5%	*1.5E-02*		*1.5E-02*	*1.5E-01*		*1.5E-01*	*8.9E-02*		*4.9E-02*	*2.2E-01*
		Mean	**1.6E-01**		**1.6E-01**	**3.7E-01**		**3.7E-01**	**3.1E-01**		**2.2E-01**	**4.6E-01**
		95%	*4.2E-01*		*4.2E-01*	*6.3E-01*		*6.3E-01*	*5.8E-01*		*4.6E-01*	*7.1E-01*
Armored Cable	4	Alpha	0.21	Incredible	0.21	3.76	Incredible	3.76	7.52	Incredible	3.10	10.97
		Beta	5.94		5.94	10.05		10.05	9.24		7.72	7.12
		5%	*6.7E-08*		*6.7E-08*	*1.0E-01*		*1.0E-01*	*2.6E-01*		*9.5E-02*	*4.2E-01*
		Mean	**3.4E-02**		**3.4E-02**	**2.7E-01**		**2.7E-01**	**4.5E-01**		**2.9E-01**	**6.1E-01**
		95%	*1.7E-01*		*1.7E-01*	*4.8E-01*		*4.8E-01*	*6.5E-01*		*5.2E-01*	*7.8E-01*

Example #2

U.S.NRC UNITED STATES NUCLEAR REGULATORY COMMISSION Protecting People and the Environment
EPRI ELECTRIC POWER RESEARCH INSTITUTE

NUREG/CR-7150 Vol. 2

Example 3

- AOV control circuit with 125vdc solenoid pilot
- Normally open, desired open valve
- Control cable X could cause spurious closing
- Single break design
- 125 vdc ungrounded, thermoset cable
- Fire-induced cable spurious operation could occur from all inter-cable and GFEHS failure modes of Cable X (there are no intra-cable hot short “source” conductors in Cable X)

U.S.NRC UNITED STATES NUCLEAR REGULATORY COMMISSION Protecting People and the Environment
EPRI ELECTRIC POWER RESEARCH INSTITUTE

NUREG/CR-7150 Vol. 2

Example 3 Solution Table

CONDITIONAL PROBABILITY OF SPURIOUS OPERATION FOR SINGLE BREAK CONTROL CIRCUITS

Table 4-1. Conditional Probability of Spurious Operation: SOV Single Break-Control Circuits

Power Supply →			Grounded AC			Ungrounded AC (w/ Individual CPTs)			Ungrounded DC (or Ungrounded Distributed AC)			
			Conductor Hot Short Failure Mode									
Target Cable Configuration		Beta Distribution Characteristics	Intra-Cable	Inter-Cable	Aggregate	Intra-Cable	Inter-Cable	Aggregate	Intra-Cable	Inter-Cable	Ground Fault Equivalent	Aggregate
			1	2	3	4	5	6	7	8	9	10
Thermoset-Insulated Conductor Cable	1	Alpha	8.54	0.36	8.79	4.73	0.60	4.74	10.16	0.32	2.27	12.76
		Beta	11.74	35.25	11.81	2.69	613.31	2.69	11.70	50.01	11.45	10.18
		5%	*2.5E-01*	*4.6E-06*	*2.6E-01*	*3.4E-01*	*8.9E-06*	*3.4E-01*	*2.9E-01*	*1.2E-06*	*3.8E-02*	*3.9E-01*
		Mean	**4.2E-01**	**1.0E-02**	**4.3E-01**	**6.4E-01**	**9.7E-04**	**6.4E-01**	**4.6E-01**	**6.3E-03**	**1.7E-01**	**5.6E-01**
		95%	*6.0E-01*	*4.3E-02*	*6.1E-01*	*8.9E-01*	*3.5E-03*	*8.9E-01*	*6.4E-01*	*2.8E-02*	*3.5E-01*	*7.2E-01*
Thermoplastic-Insulated Conductor Cable	2	Alpha	8.54	0.85	9.19	4.73	0.27	4.86	10.16	0.92	1.83	12.66
		Beta	11.74	32.67	11.90	2.69	17.16	2.71	11.70	44.19	10.36	10.19
		5%	*2.5E-01*	*8.6E-04*	*2.7E-01*	*3.4E-01*	*5.2E-07*	*3.5E-01*	*2.9E-01*	*8.7E-04*	*2.6E-02*	*3.8E-01*
		Mean	**4.2E-01**	**2.5E-02**	**4.4E-01**	**6.4E-01**	**1.5E-02**	**6.4E-01**	**4.6E-01**	**2.0E-02**	**1.5E-01**	**5.5E-01**
		95%	*6.0E-01*	*7.9E-02*	*6.1E-01*	*8.9E-01*	*7.2E-02*	*8.9E-01*	*6.4E-01*	*6.2E-02*	*3.4E-01*	*7.2E-01*
Metal Foil Shield Wrap Cable	3	Alpha	1.22	Incredible	1.22	2.63	Incredible	2.63	2.54	Incredible	1.97	4.68
		Beta	3.77		3.77	2.24		2.24	2.79		4.54	2.69
		5%	*2.5E-02*		*2.5E-02*	*1.9E-01*		*1.9E-01*	*1.6E-01*		*6.7E-02*	*3.4E-01*
		Mean	**2.4E-01**		**2.4E-01**	**5.4E-01**		**5.4E-01**	**4.8E-01**		**3.0E-01**	**6.3E-01**
		95%	*5.9E-01*		*5.9E-01*	*8.7E-01*		*8.7E-01*	*8.1E-01*		*6.1E-01*	*8.9E-01*
Armored Cable	4	Alpha	0.22	Incredible	0.22	4.00	Incredible	4.00	9.82	Incredible	2.77	14.63
		Beta	4.52		4.52	4.93		4.93	3.59		2.97	2.34
		5%	*2.3E-07*		*2.3E-07*	*1.9E-01*		*1.9E-01*	*5.2E-01*		*1.7E-01*	*7.1E-01*
		Mean	**4.7E-02**		**4.7E-02**	**4.5E-01**		**4.5E-01**	**7.3E-01**		**4.8E-01**	**8.6E-01**
		95%	*2.4E-01*		*2.4E-01*	*7.1E-01*		*7.1E-01*	*9.0E-01*		*8.0E-01*	*9.7E-01*

4-3

Prob. = Boolean OR = (6.3E-03) + (1.7E-01) - (6.3E-03)*(1.7E-01) = 1.8E-01

Example #3

U.S.NRC UNITED STATES NUCLEAR REGULATORY COMMISSION Protecting People and the Environment

EPRI ELECTRIC POWER RESEARCH INSTITUTE

NUREG/CR-7150 Vol. 2

Example 4

- 4kV pump control circuit with 125vdc control power
- Pump is normally off, spurious start of the pump could have undesired consequences
- Control cable X could cause spurious start of the pump
- Single break design
- 125 vdc ungrounded, thermoset cable
- Fire-induced cable spurious operation could occur from intra-cable, inter-cable, and GFEHS failure modes of Cable X.

U.S.NRC UNITED STATES NUCLEAR REGULATORY COMMISSION Protecting People and the Environment
EPRI ELECTRIC POWER RESEARCH INSTITUTE

NUREG/CR-7150 Vol. 2

Example 4 Solution Table

Table 4-4. Conditional Probability of Spurious Operation: Ungrounded DC Control Circuits for Medium Voltage Circuit Breaker

Characteristics of Beta Distribution	Probability Value
Alpha	5.54
Beta	8.47
5%	*2.0E-01*
Mean	**4.0E-01**
95%	*6.1E-01*

Example #4

U.S.NRC UNITED STATES NUCLEAR REGULATORY COMMISSION Protecting People and the Environment
EPRI ELECTRIC POWER RESEARCH INSTITUTE

NUREG/CR-7150 Vol. 2

Example 5

- AOV control circuit with 125vdc solenoid pilot
- Normally closed, desired closed valve
- Control cable X could cause spurious opening
- Single break design, but breaker is maintained open during normal operation, creating a “double break” configuration
- 125 vdc ungrounded, thermoset cable
- Since power is removed during normal operation, the only failure modes for cable X are:
  - 2 proper polarity inter-cable hot shorts, or
  - an inter-cable hot short and a GFEHS.

U.S.NRC UNITED STATES NUCLEAR REGULATORY COMMISSION Protecting People and the Environment
EPRI ELECTRIC POWER RESEARCH INSTITUTE

NUREG/CR-7150 Vol. 2

Example 5 Solution Table

Table 5-2. Conditional Probability of Spurious Operation: Double Break Control Circuits Ungrounded DC (or Ungrounded Distributed AC) BASE CASE – SOV

Target Cable Configuration		Beta Distribution Characteristics	Conductor Hot Short Failure Mode Combinations					
			Intra-Cable & Intra-Cable	Intra-Cable & Inter-Cable	Inter-Cable & Inter-Cable	Intra-Cable & Ground Fault Equivalent	Inter-Cable & Ground Fault Equivalent	Aggregate
			1	2	3	4	5	6
Thermoset-Insulated Conductor Cable	1	Alpha	3.90	0.32	Incredible	2.21	Incredible	4.66
		Beta	13.36	109.19		26.64		11.64
		5%	*8.5E-02*	*5.1E-07*		*1.6E-02*		*1.2E-01*
		Mean	**2.3E-01**	**2.9E-03**		**7.7E-02**		**2.9E-01**
		95%	*4.0E-01*	*1.3E-02*		*1.7E-01*		*4.8E-01*
Thermoplastic-Insulated Conductor Cable	2	Alpha	3.90	0.87	0.30	1.80	0.60	4.67
		Beta	13.36	90.66	352.91	24.12	193.16	11.56
		5%	*8.5E-02*	*3.4E-04*	*9.7E-08*	*1.1E-02*	*2.8E-05*	*1.2E-01*
		Mean	**2.3E-01**	**9.5E-03**	**8.6E-04**	**7.0E-02**	**3.1E-03**	**2.9E-01**
		95%	*4.0E-01*	*3.0E-02*	*3.9E-03*	*1.7E-01*	*1.1E-02*	*4.8E-01*
Metal Foil Shield Wrap Cable	3	Alpha	1.06	Incredible	Incredible	1.53	Incredible	1.48
		Beta	2.92			9.16		2.63
		5%	*2.1E-02*			*1.9E-02*		*5.7E-02*
		Mean	**2.7E-01**			**1.4E-01**		**3.6E-01**
		95%	*6.5E-01*			*3.4E-01*		*7.5E-01*
Armored Cable	4	Alpha	4.45	Incredible	Incredible	3.04	Incredible	6.07
		Beta	3.65			5.55		2.60
		5%	*2.7E-01*			*1.2E-01*		*4.3E-01*
		Mean	**5.5E-01**			**3.5E-01**		**7.0E-01**
		95%	*8.1E-01*			*6.3E-01*		*9.1E-01*

Example #5

U.S.NRC UNITED STATES NUCLEAR REGULATORY COMMISSION Protecting People and the Environment
EPRI ELECTRIC POWER RESEARCH INSTITUTE

CIRCUIT FAILURE MODE LIKELIHOOD ANALYSIS

Any Questions?

CIRCUIT FAILURE MODE LIKELIHOOD ANALYSIS
Corresponding PRA Standard Element

- Primary match is to element CF – Circuit Failures
  - CF Objectives (as stated in the PRA standard):

"[T]o

(a) refine the understanding and treatment of fire-induced circuit failures on an individual fire scenario basis

(b) ensure that the consequences of each fire scenario on the damaged cables and circuits have been addressed"

CIRCUIT FAILURE MODE LIKELIHOOD ANALYSIS

HLRs (per the PRA Standard) – CF element

- HLR-CF-A: The Fire PRA shall determine the applicable conditional probability of the cable and circuit failure mode(s) that would cause equipment functional failure and/or undesired spurious operation based on the credited function of the equipment in the Fire PRA. (2 SRs)

- HLR-CF-B: The Fire PRA shall document the development of the elements above in a manner that facilitates Fire PRA applications, upgrades, and peer review. (1 SR)

U.S.NRC UNITED STATES NUCLEAR REGULATORY COMMISSION Protecting People and the Environment
EPRI ELECTRIC POWER RESEARCH INSTITUTE

CIRCUIT FAILURE MODE LIKELIHOOD ANALYSIS

NEI 00-01, Rev. 2, Section 5.2.1.2 – Probability of Spurious Actuation

- NEI 00-01, Rev. 2, “Guidance for Post-Fire Safe Shutdown Circuit Analysis,” May 2009.
- Generally follows Option #1 of the Task 10 methodology in NUREG/CR-6850, EPRI TR 1011989.
- Recommends the use of spurious actuation probability point estimates from:
  - Table 2.8.3 in NRC Inspection Manual 0609, Appendix F (“FP SDP”)
  - Tables 7.1 and 7.2 from EPRI Report 1006961 (“Expert Elicitation”)

CIRCUIT FAILURE MODE LIKELIHOOD ANALYSIS

Mapping HLRs & SRs for the CF technical element to NUREG/CR-6850, EPRI TR 1011989

Technical Element	HLR	SR	6850/1011989 Sections that cover SR	Comments
CF	A	The Fire PRA shall determine the applicable conditional probability of the cable and circuit failure mode(s) that would cause equipment functional failure and/or undesired spurious operation based on the credited function of the equipment in the Fire PRA.		
		1	10.5.2, 10.5.3	
		2	10.5.3	
	B	The Fire PRA shall document the development of the elements above in a manner that facilitates Fire PRA applications, upgrades, and peer review.		
		1	9.5.3, 10.5.3	Also covered in "Detailed Circuit Failure Analysis" chapter

U.S.NRC UNITED STATES NUCLEAR REGULATORY COMMISSION Protecting People and the Environment
EPRI ELECTRIC POWER RESEARCH INSTITUTE

CIRCUIT FAILURE MODE LIKELIHOOD ANALYSIS

Mapping NEI 00-01, Rev. 2, Risk Significance Analysis to NUREG/CR-6850, EPRI TR 1011989

NEI 00-01, Rev. 2, Section	NEI 00-01 – Probability of Spurious Actuation	6850/1011989 Sections that cover step	Comments
5 – Risk Signifi-cance Analysis	5.2.1.2	10.5.3	NEI 00-01, Rev. 2, only recommends use of tables to determine spurious actuation probability estimates. NUREG/CR-6850, EPRI TR 1011989 also offers formula method.

U.S.NRC UNITED STATES NUCLEAR REGULATORY COMMISSION Protecting People and the Environment
EPRI ELECTRIC POWER RESEARCH INSTITUTE

CFMLA Guidance
New versus Old

"Old"

- NUREG/CR-6850, Ch. 10, Appendices J & K (as supplemented)
- NFPA 805 FAQ 08-0047, Cable Dependency (NUREG/CR-6850, Supp. 1, Ch. 15)

"New"

- NRC Interim Guidance
  - 2/12/14 (NRC ADAMS ML14017A135)
  - NRC-NEI letter dated 4/23/14 (ML14086A165).
- NUREG/CR-7150 / EPRI 1026424, JACQUE-FIRE, Volume 1 (ML12313A105)
- NUREG/CR-7150 / EPRI 3002001989, JACQUE-FIRE, Volume 2 (ML14141A129)

U.S.NRC UNITED STATES NUCLEAR REGULATORY COMMISSION Protecting People and the Environment
EPRI ELECTRIC POWER RESEARCH INSTITUTE