ELECTRIC POWER RESEARCH INSTITUTE

BWR Operating Experience

Chuck Wirtz
EPRI, BWRVIP Integration Task Manager

EPRI/NRC Technical Exchange Meetings
May 22-24, 2018

© 2018 Electric Power Research Institute, Inc. All rights reserved.

Outline

- Significant BWR Operating Experience (OE) since last year's Technical Exchange meetings
  - Limerick Unit 2 Instrumentation Nozzle Leak
  - Hatch Unit 1 Top Guide Grid Beam to Top Guide Rim Attachment Cracking
  - Brunswick Unit 1 Feedwater Nozzle Assembly Dissimilar Metal Weld Planar Indications
- Utility and BWRVIP Actions

© 2018 Electric Power Research Institute, Inc. All rights reserved.

Limerick Unit 2
Instrumentation Nozzle Leak

© 2018 Electric Power Research Institute, Inc. All rights reserved.

Limerick Unit 2

- BWR 4, 251” Diameter Vessel
- RPV Manufacturer: CB&I
- Instrument Nozzles: 10 Total
  - 4 Upper (N12)
  - 2 Mid-level (N11)
  - 4 Lower (N16)
- LGS 2 N16D Nozzle – 2” Nominal Dia.
  - Inconel (SB-166) material bored from a solid piece of bar stock
  - Alloy 182, J-groove weld on the ID of the RPV
  - Corrosion Resistant Cladding installed over weld surface

© 2018 Electric Power Research Institute, Inc. All rights reserved.

N16D Instrument Nozzle Leak

- Leakage Identified during RPV System Leakage test at end of refuel outage
- ~1 pint/min
- Leak originating from ~1 o'clock position within the RPV shell bore
- Similar to QDC Fall 2012 leak - repaired with AREVA half nozzle method
- N16 is below water line and requires plug from vessel ID for repair

© 2018 Electric Power Research Institute, Inc. All rights reserved.

Nozzle Location & Configuration

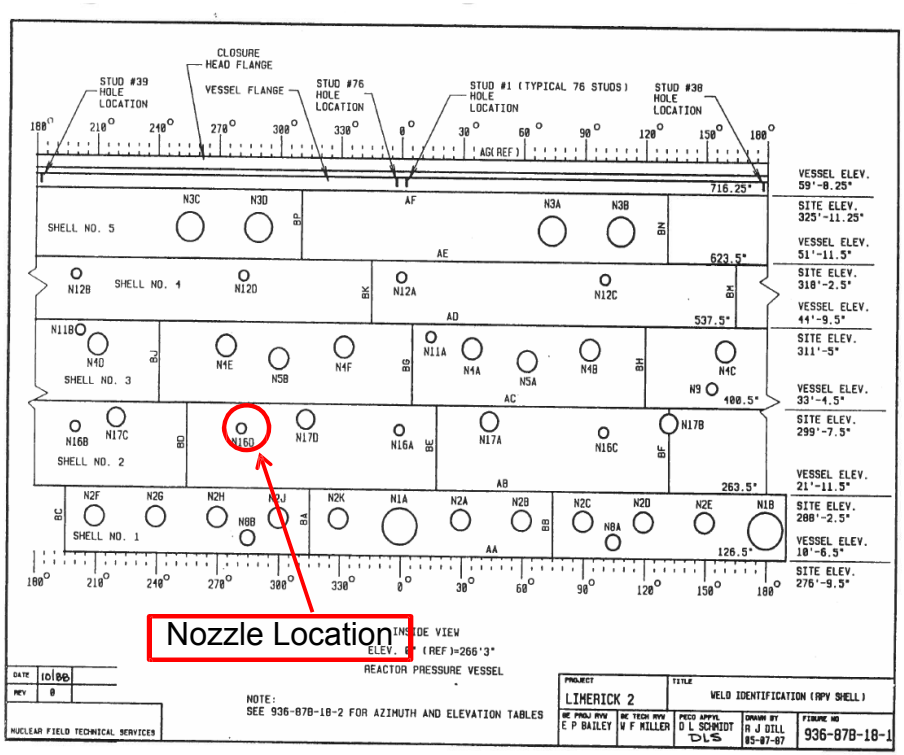

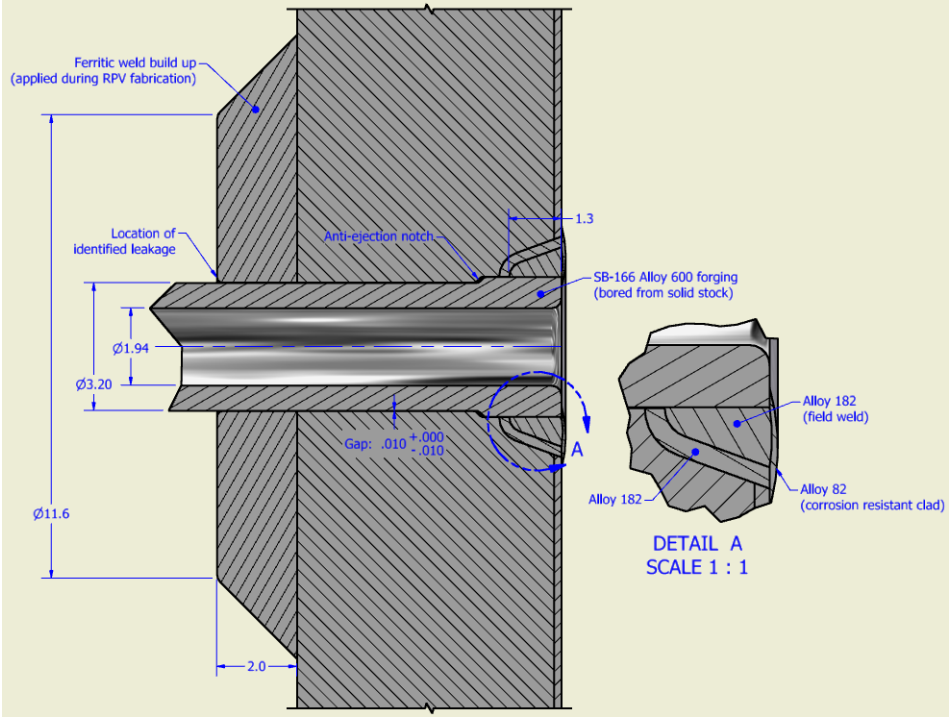

© 2018 Electric Power Research Institute, Inc. All rights reserved.

ELECTRIC POWER RESEARCH INSTITUTE

UT Performed From RPV OD

- The N16D nozzle forging was examined 360° around the nozzle from an area adjacent to RPV shell exterior reinforcement pad. The purpose was to detect potential cracking within the forging wall thickness.
  - There was no evidence of through-wall cracks detected. *(Demonstrated Technique PDI-02 was used)*
- An additional informational examination utilizing multiple Vee-paths beyond the qualification of the procedure was utilized to try to get a reflection from the end of the nozzle forging. A calibration block of similar thickness and material was used for reference and was able to detect the outside corner trap at a 9” distance.
  - Exam in the field was not able to detect the end of the forging using this unqualified technique.
- A straight beam UT exam was performed from the weld reinforcement pad adjacent to nozzle forging to identify any evidence of significant wall thickness loss due to wastage and measurement of the nozzle exterior weld reinforcement pad at four locations.
  - There was no evidence of wall loss or localized wastage noted.
- Demonstrated phased –array UT performed from the vessel reinforcing weld pad.
  - Results in following slide

© 2018 Electric Power Research Institute, Inc. All rights reserved.

Demonstrated UT results

- No flaws identified in low-alloy RPV material
- Circ Flaws not detected in weld butter
- Ultrasonic responses observed along penetration tube-to-J-groove weld interface
  - Located from TDC to ~45-degree CW when looking towards RPV
  - Somewhat similar pattern seen near bottom, but not as severe
- Suspect indications may be a cluster of stacked volumetric fabrication flaws located along fusion line or an SCC flaw

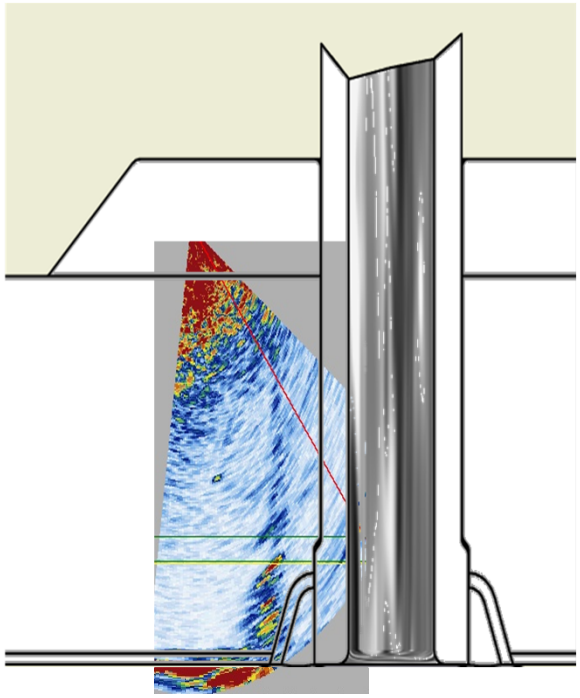

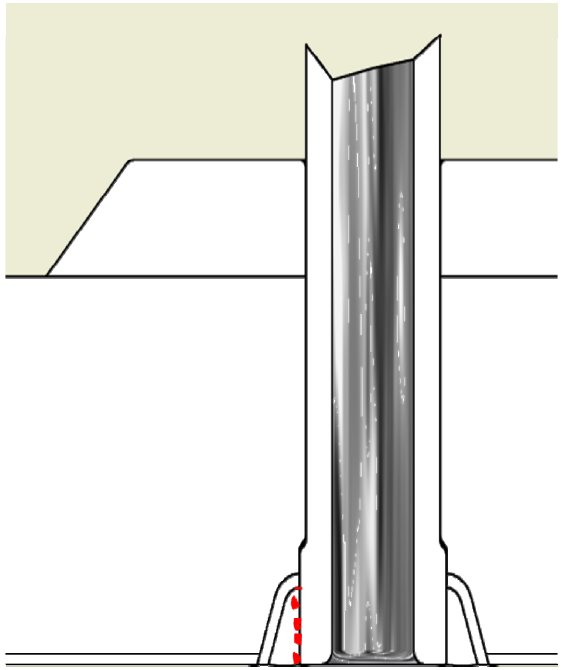

© 2018 Electric Power Research Institute, Inc. All rights reserved.

Likely Cause

- Fabrication flaws linked over time via Intergranular Stress Corrosion Cracking (IGSCC), thermal cycles or a combination of both
- Source of wetted environment at suspect area noted in IVVI (see following slide)
- Crevice conditions are not mitigated by HWC/NMC

9

© 2018 Electric Power Research Institute, Inc. All rights reserved.

Wetted Environment Path

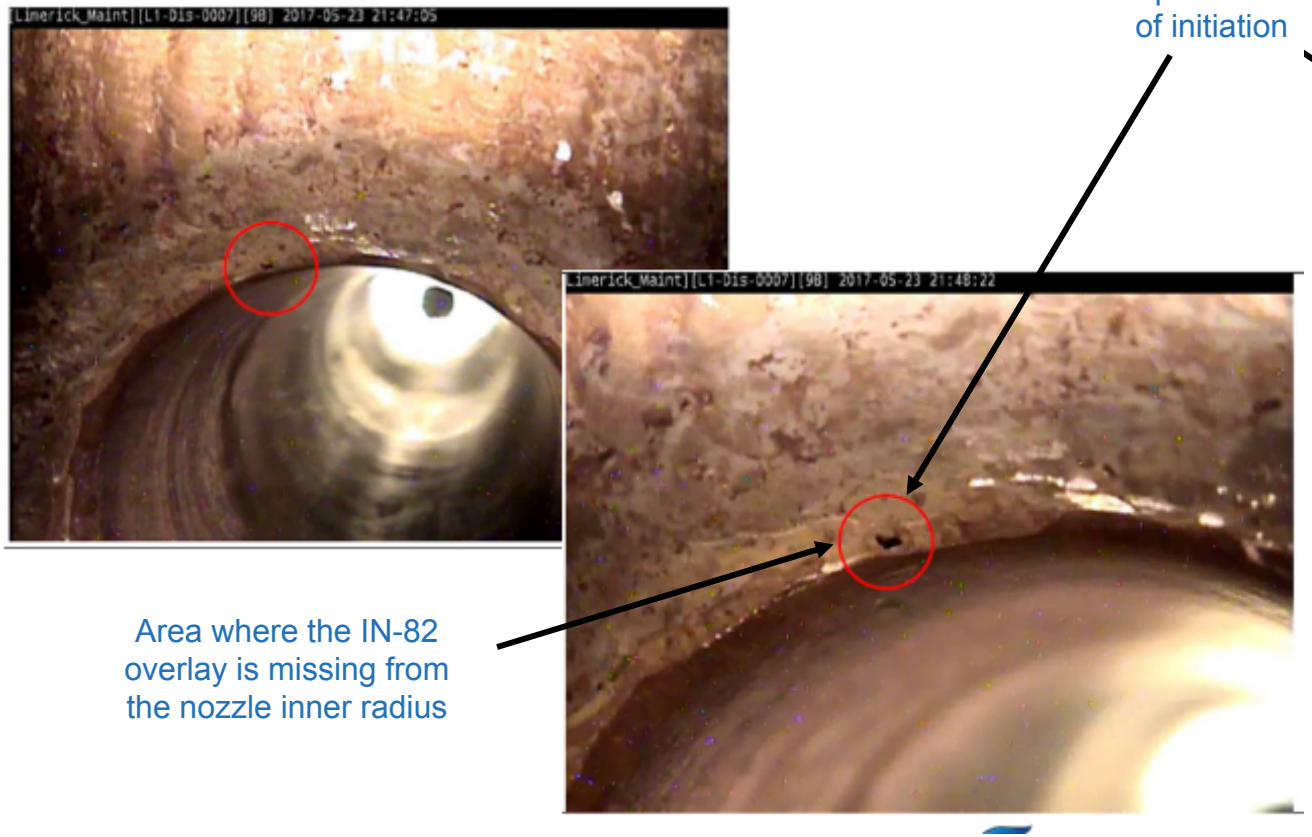

Suspected area of initiation

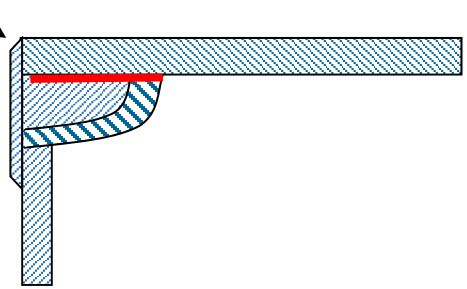

Area where the IN-82 overlay is missing from the nozzle inner radius

10

© 2018 Electric Power Research Institute, Inc. All rights reserved.

ELECTRIC POWER RESEARCH INSTITUTE

Performed Half Nozzle Repair

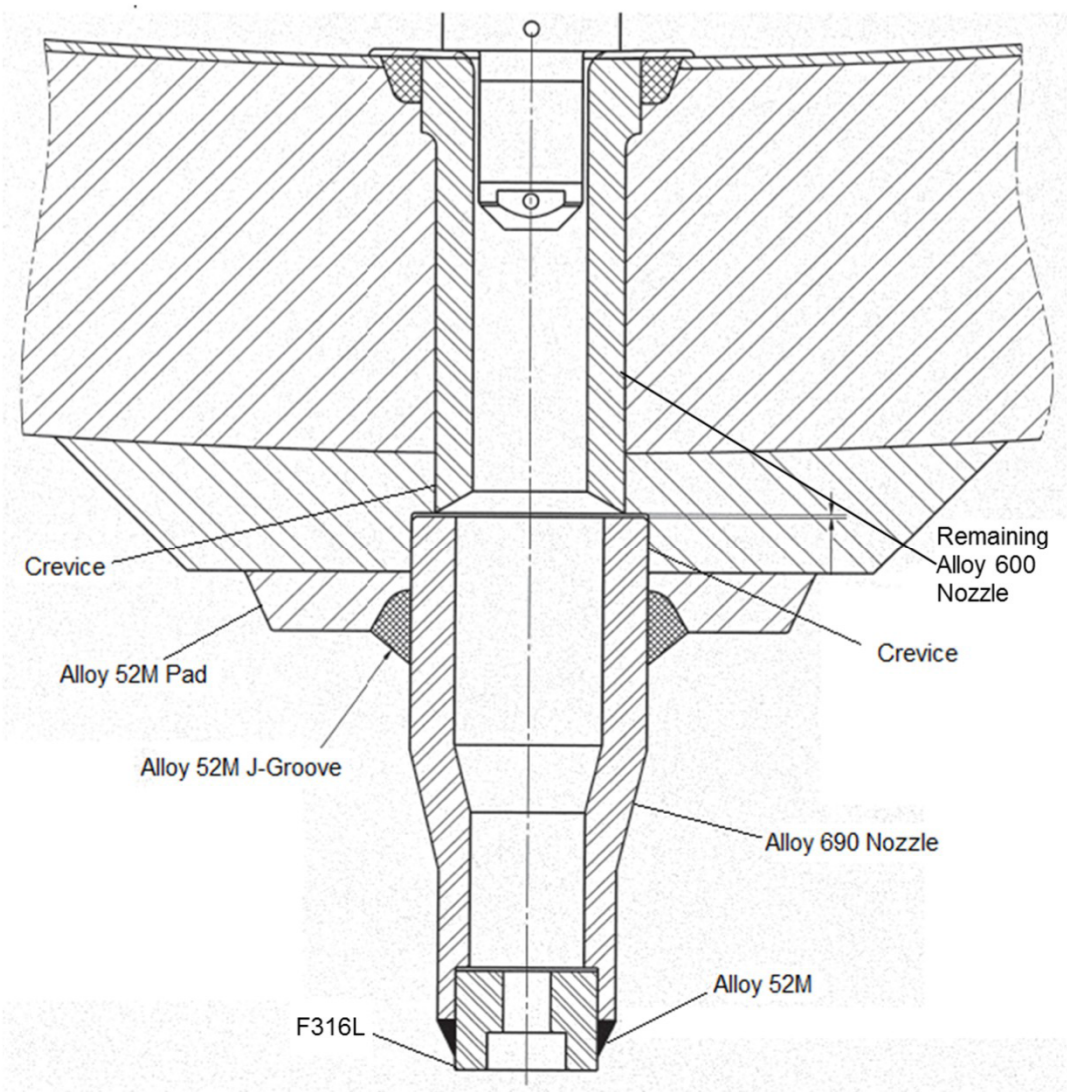

© 2018 Electric Power Research Institute, Inc. All rights reserved.

ELECTRIC POWER RESEARCH INSTITUTE

Analysis

- Flaw Analysis postulating a bounding flaw performed to demonstrate the acceptability of not removing the potential flaw in the j-groove weld
- Corrosion Evaluation for RPV base metal within the nozzle bore that will be exposed to the BWR environment
- Fatigue Crack Growth Evaluation for postulated flaw
- Lost Parts analysis for the potential of remaining nozzle becoming a loose part
- Relief Request approved for:
  - Performing repair without removing the existing flaw
  - Not fully characterizing and sizing the flaw

© 2018 Electric Power Research Institute, Inc. All rights reserved.

Hatch Unit 1 Top Guide Grid Beam to Top Guide Rim Attachment Cracking

© 2018 Electric Power Research Institute, Inc. All rights reserved.

Hatch Unit 1 Top Guide

- BWR/4 Mark I design
- Top Guide Constructed of 304 SS.
- No top guide wedges are installed on Hatch-1. (U2 uses wedges)
- Current fluence at H3 (lower top guide rim location) approx. $6x10^{20}$ n/cm^2 max.

SNC Proprietary Information

© 2018 Electric Power Research Institute, Inc. All rights reserved.

Hatch Top Guide Support Configuration

- HNP1 has 8 top guide cross-connecting beam attachments to the top guide rim (4 on each quadrant), cross connecting beams. Single beam attachments exist as well.
- The hardware attaching these beams consists of pins inserted in the upper and lower top guide plates, which are connected to the beam via upper and lower collars welded to the beam.
- The pins are similar to location 4 from BWRVIP-26-A, and the welds to the beam are similar to location 5, however, Hatch's "rim connector" at these location is not a solid collar extending from top to bottom like shown in BWRVIP-26-A, but two separate collars.

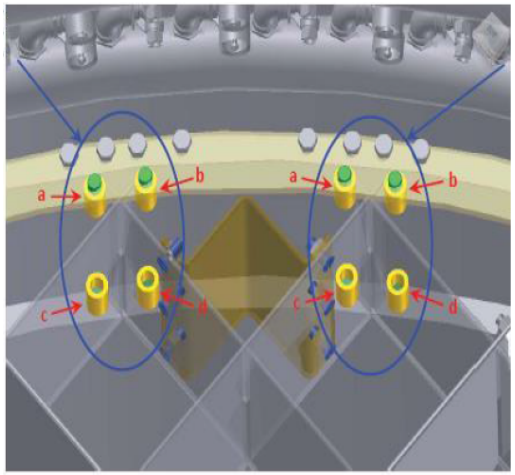

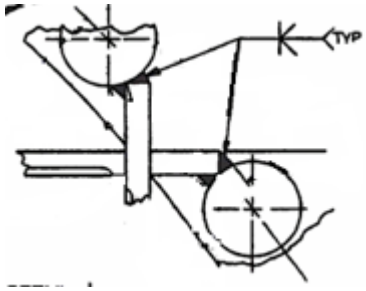

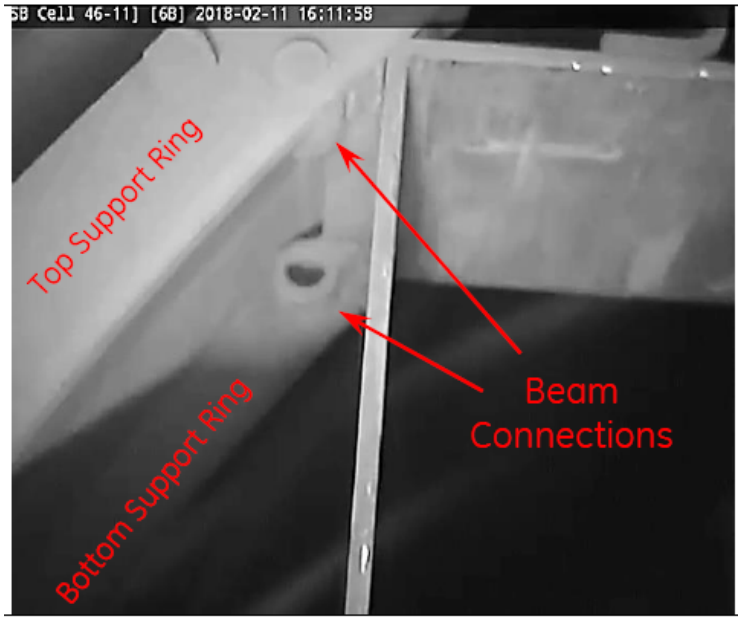

© 2018 Electric Power Research Institute, Inc. All rights reserved.

Hatch 1R28 Inspection

- While positioning the camera for inspection of the Shroud ID, indications of cracking on one of the lower collars of a top guide grid to top guide rim cross-beam connection were noted from within one of the top guide cells.
- BWRVIP-26-A considers weld connection failure and states that the pins remain captured assuming fillet welds fail. However, failure at collar location not addressed by BWRVIP-26-A.
- Contacted OEM to start evaluation process.

© 2018 Electric Power Research Institute, Inc. All rights reserved.

Hatch 1R28 Inspection

- Additional exams were performed (best effort VT-1) at all accessible beam connection locations, including both cross-beam connection points and single beam connection points. The results of all the exams found:
  - 5 of the 8 azimuths with cross-beam connections were found to have cracking in the lower collars
  - 7 of 8 azimuths with cross-beam connections and 1 of 16 azimuths with single connections had cracking in the bottom support plate of the top guide rim assembly
  - No cracking was found on any of the upper collars or anywhere in the top support plate of the top guide rim assembly

© 2018 Electric Power Research Institute, Inc. All rights reserved.

Analysis

- Apparent cause is IGSCC driven by high installation stresses (e.g., jacking of beams and rim assembly to facilitate fit-up at beam connections).
- Conservative analysis assuming complete failure of flawed collars performed by OEM and flaws found to be acceptable for one cycle.
- Under current analysis, Hatch must re-inspect the accessible locations every outage.
- Consideration will be given to performance of a more detailed analysis to show additional margin and reduce the re-inspection requirements.

© 2018 Electric Power Research Institute, Inc. All rights reserved.

Brunswick Unit 1 Feedwater Nozzle Assembly Dissimilar Metal Weld Planar Indications

© 2018 Electric Power Research Institute, Inc. All rights reserved.

Discovery

- Planar indications were found during weld examinations for:
  - BWRVIP-75-A Category D weld examinations
  - ASME Risk-Informed ISI Program for Exam Category R-A, Item Numbers R1.14-2 and R1.20-4
- The NDE method was automated/encoded phased array UT (PAUT)
- ID-connected circumferential planar indications were found at 3 feedwater nozzle dissimilar metal weld locations
  - Nozzle N4A, Weld 1B21N4A-2-SW1-2, Exam required by BWRVIP-75-A only
  - Nozzle N4D, Weld 1B21N4D-5-SW1-2, Exam required by BWRVIP-75-A & RI-ISI Item No. R1.14-2 (Crevice corrosion mechanism)
  - Nozzle N4D, Weld 1B21N4D-5-SW2-3, Exam required by BWRVIP-75-A & RI-ISI Item No. R1.20-4 (No degradation mechanism)
- The planar indications were found in the weld exam volume, but at distances that could be beyond the primary HAZ

© 2018 Electric Power Research Institute, Inc. All rights reserved.

Feedwater Nozzle Safe-End Assembly Configuration and Indication Locations

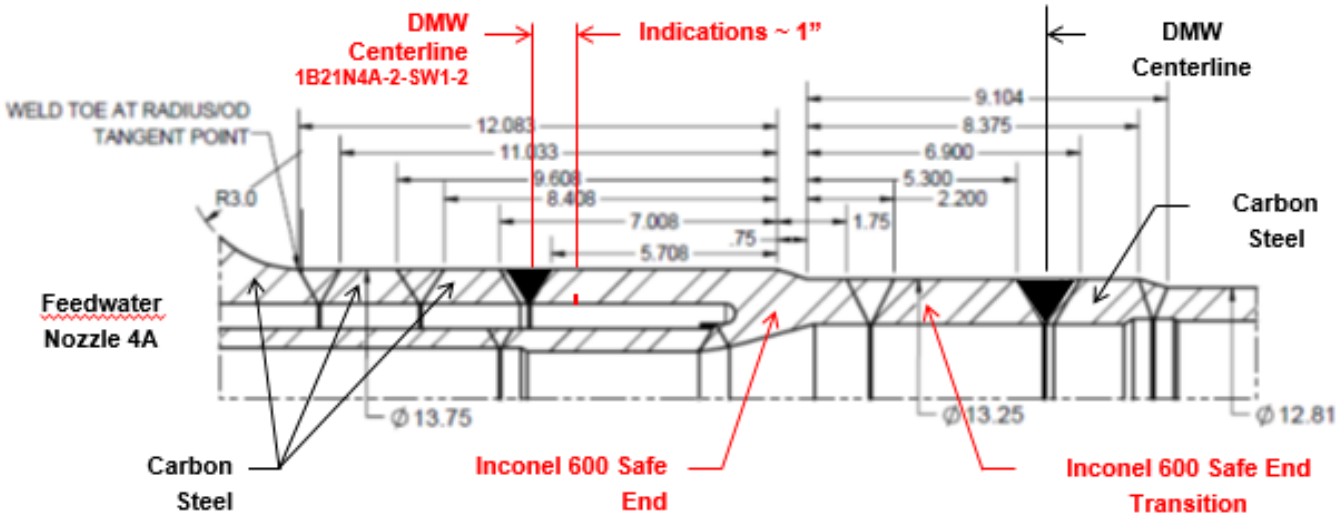

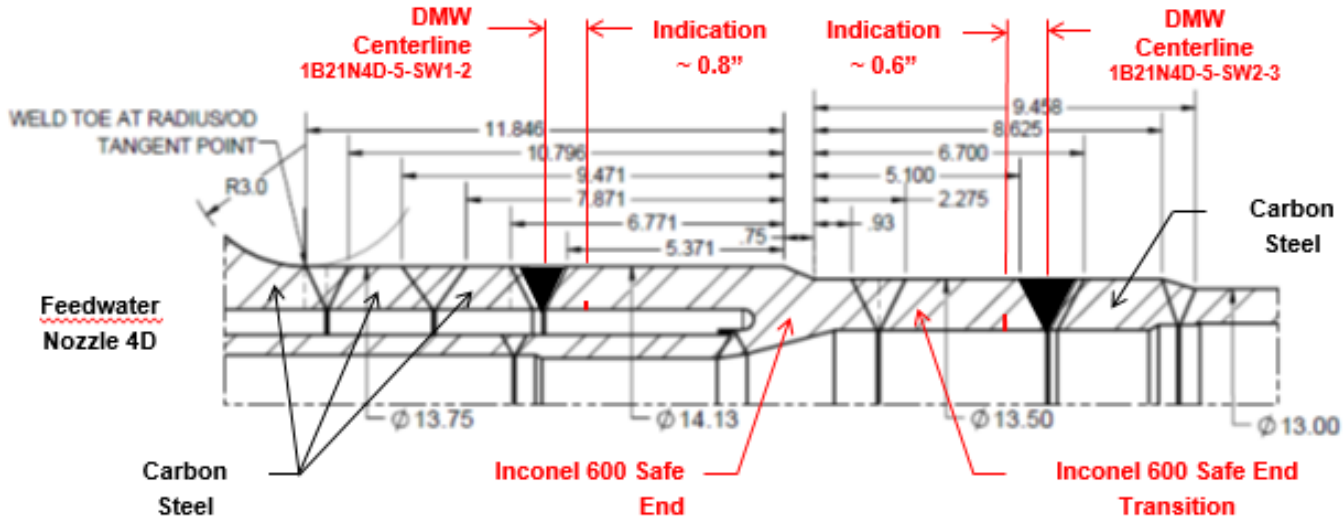

© 2018 Electric Power Research Institute, Inc. All rights reserved.

EPRI ELECTRIC POWER RESEARCH INSTITUTE

Location Details

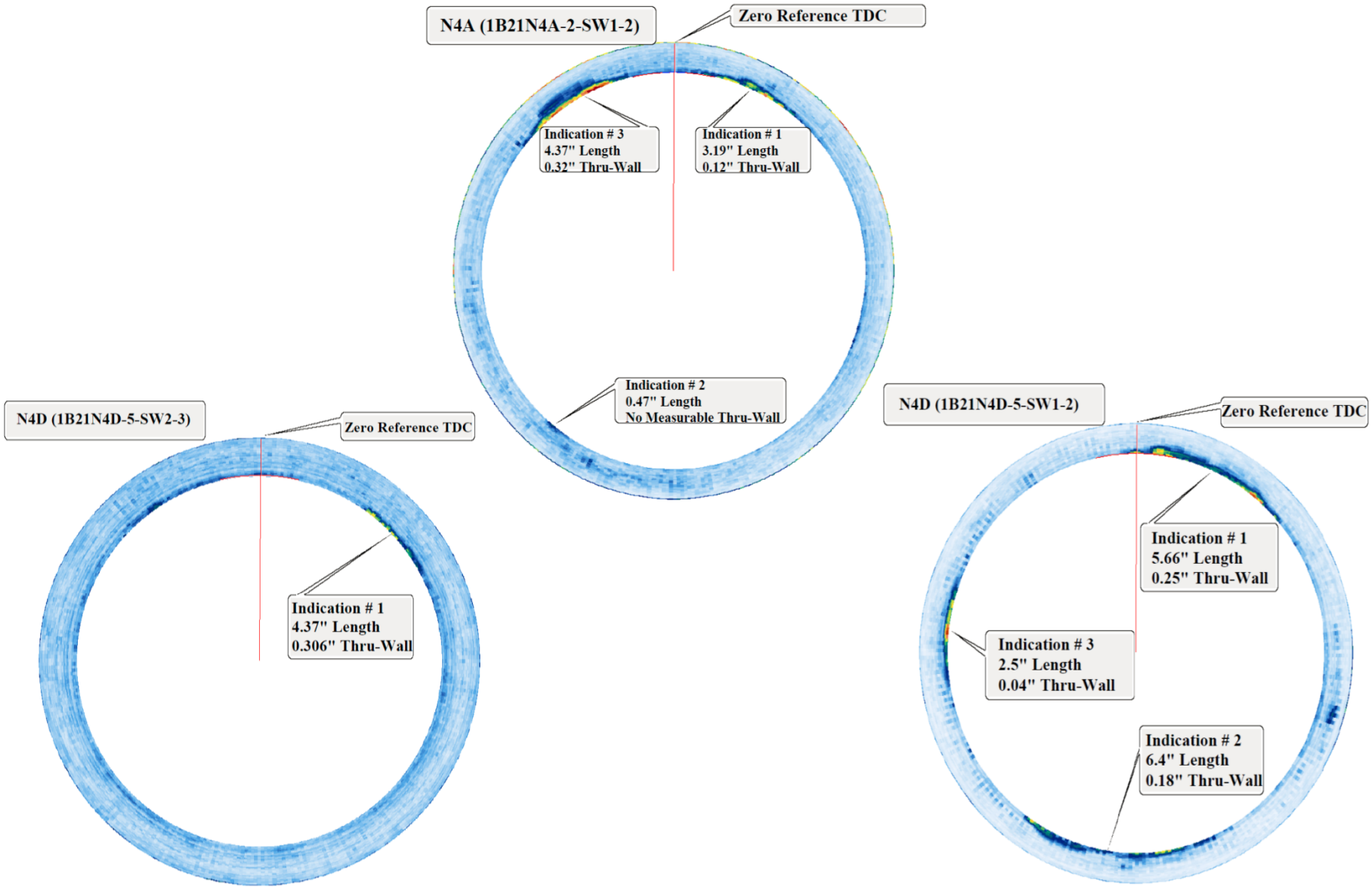

© 2018 Electric Power Research Institute, Inc. All rights reserved.

ELECTRIC POWER RESEARCH INSTITUTE

Exam Details

- Welds all BWRVIP-75-A Category D welds that are considered susceptible to IGSCC with no stress improvement and require a 6-year exam frequency
- No indications were found during the last weld exams in 2012
- The NDE method used in 2012 was manual phased array UT
- The automated phased array UT performed in 2018 used larger transducers and all the welds required some additional weld prep/contouring in order to ensure good contact
- All Cat D, Inconel DM welds inspected during the outage, including all Feedwater nozzles (8 DM welds), so no scope expansion in accordance with BWRVIP-75-A needed.
- 7 additional welds examined to meet Section XI Risk-Informed scope expansion requirements
- No indications found in the scope expansion welds

© 2018 Electric Power Research Institute, Inc. All rights reserved.

Indication Details

- The indications have similarities:
  - All at the edge of the base metal / HAZ exam boundary
  - All on the Inconel 600 side of the DM weld
  - Both N4A and N4D have 3 indications with roughly equal axial spacing
  - All flaw locations were in NSSS manufacturer provided subassemblies (shop weldments)
  - All present as ID connected surface planar flaws
- EPRI performed and independent review of the UT data
  - EPRI noted that the indications exhibit some UT characteristics that are not typical of classic IGSCC and possibly suggest some type of fabrication/repair activities in the areas of the indications
  - Lacking any definitive evidence of repairs, EPRI's review of the data concurred with Brunswick calling the indications inservice ID connected surface planar flaws

© 2018 Electric Power Research Institute, Inc. All rights reserved.

Analysis and Repairs

- Apparent Cause is IGSCC
- The Alloy 600 safe-end to carbon steel welds in both the N4A and N4D nozzle assemblies were repaired by weld overlay in accordance with an approved relief request
- The single surface planar indication in the Alloy 600 safe-end transition piece to carbon steel weld of the N4D nozzle assembly was evaluated in accordance with ASME Section XI, IWB-3600, and found acceptable for operation beyond the successive examination requirements of ASME Section XI.

© 2018 Electric Power Research Institute, Inc. All rights reserved.

Utility and BWRVIP Actions

© 2018 Electric Power Research Institute, Inc. All rights reserved.

Utility and BWRVIP Actions

- In all three cases, the affected utilities contacted the BWRVIP within 24 hours of discovery and briefed the BWRVIP on the emergent OE.
- The BWRVIP Research Integration Chairman contacted NRR to let them know that the BWRVIP had been informed of the OE and would be looking into whether there are any generic implications requiring follow-up actions by the BWRVIP.
- Once the plants worked through the discovery phase, calls were held between the utility and the BWRVIP to discuss and screen the OE in accordance with the NEI 03-08 emergent issues protocol.

© 2018 Electric Power Research Institute, Inc. All rights reserved.

BWRVIP Follow-up Actions

- For the Limerick leaking instrument nozzle OE, the BWRVIP has initiated a project to:
  - As a short term action, develop a strategy document (i.e., playbook) to aid utilities in dealing with any future similar OE
  - As long term actions, consider revisions to BWRVIP-49-A, the BWRVIP Inspection and Evaluation Guidelines for instrument penetrations, and BWRVIP-57-A, the BWRVIP Repair Design Criteria for instrument penetrations
- For the Hatch top guide grid beam attachment OE, the BWRVIP has initiated a project to:
  - Survey the BWRVIP members to establish inspection experience and availability of design input
  - Conduct a fabrication study for the top guide assemblies to better understand conditions that could lead to the subject degradation and the configurations that may be affected
  - Based on the results of the first two items, conduct modeling and evaluation to determine whether additional inspections are necessary
- Follow-up actions, if any are necessary, for the Brunswick dissimilar metal weld OE are still under consideration

© 2018 Electric Power Research Institute, Inc. All rights reserved.

Together…Shaping the Future of Electricity

© 2018 Electric Power Research Institute, Inc. All rights reserved.

ELECTRIC POWER RESEARCH INSTITUTE