ELECTRIC POWER RESEARCH INSTITUTE

BWRVIP Second License Renewal Activities

Wayne Lunceford
Principal Technical Leader, EPRI BWRVIP

Industry-NRC Materials Technical Exchange
May 22, 2018

© 2017 Electric Power Research Institute, Inc. All rights reserved.

Outline

- BWRVIP Perspective and SLR Approach
- Reactor Internals Evaluation
  - Position on “further evaluation” items identified in NUREGs addressing SLR (NUREG-2191, NUREG-2192)
  - Identified “enhancements” to BWRVIP guidance for reactor internals
- RPV Evaluation
  - Inservice Inspection (ISI)
  - Upper Shelf Energy (USE)
  - Probabilistic Fracture Mechanics (PFM) Analyses
  - Material Surveillance
- Future Plans / Meetings

© 2018 Electric Power Research Institute, Inc. All rights reserved.

BWRVIP Perspective on SLR

- Existing aging management guidance is robust and, unless impacted by time-dependent factors, remains adequate as-is to manage the effects of aging
- Field performance data are continually evaluated and aging management guidance updated as appropriate
- BWRVIP aging management program elements are interval-based
  - Independent of total plant operating time (or licensed operating period)
  - Periodic inspection requirements based on historical precedents, field performance, and generic flaw tolerance evaluations

© 2018 Electric Power Research Institute, Inc. All rights reserved.

BWRVIP SLR Approach

- Aging management guidance implementation should be linked to engineering-based parameters
  - Contained in the underlying analytical work forming the technical basis for AMP implementation
  - Limitations not based on any specific operating period
  - Applicability confirmed on a plant-specific basis (results need not be “bounding” for the entire fleet)
- Two new technical basis documents created to address operation beyond 60 years, “extended operations”:
  - BWRVIP-315, Reactor Internals
  - BWRVIP-316, RPV (essentially a new version of BWRVIP-74-A)

© 2018 Electric Power Research Institute, Inc. All rights reserved.

BWRVIP-315, Reactor Internals Aging Management

- Comprehensive aging management review for BWR reactor internals with consideration of extended operations
  - Review of all relevant degradation mechanisms
  - Aging management evaluations comprehensively reviewed for time dependencies / limitations
- Addresses aging management concerns identified in the Standard Review Plan for SLR
- Provides a set of enhancements to BWRVIP guidance determined to be needed to address extended operations

© 2018 Electric Power Research Institute, Inc. All rights reserved.

SRP-SLR and GALL-SLR Further Evaluation Items

- The Standard Review Plan for SLR (NUREG-2192) includes three “further evaluation” (FE) items relevant to BWR internals that must be addressed in SLRAs:
  - IASCC (Sect. 3.1.2.2.12)
  - CASS (Sect. 3.1.2.2.13)
  - Irradiation-enhanced stress relaxation (Sect. 3.1.2.2.14)
- The BWRVIP agrees that these are the key degradation mechanisms relevant to reactor internals that are impacted by consideration of operation beyond 60 years

© 2018 Electric Power Research Institute, Inc. All rights reserved.

Management of IASCC

- Initiation of new cracks
  - No evidence of new SCC occurrences as a result of increasing neutron fluence
  - Data strongly suggest that newly identified cracks are the result of NDE technology improvements and increased examiner attention to detail
  - Continued periodic inspection is adequate to monitor performance and identify any adverse trends
- Crack growth
  - Existing flaw evaluation guidance adequate to address BWR extended operations
  - I&E guidance enhancements proposed for components where existing I&E guideline does not explicitly identify the need to consider impact of neutron fluence on evaluation of flaws (jet pumps, LPCI couplings)

© 2018 Electric Power Research Institute, Inc. All rights reserved.

Management of CASS

- Primary concern occurs for jet pump and BWR/6 LPCI coupling castings
- Located in a region for which fluence may exceed $6x10^{20}$ n/cm^2 (E > 1 MeV) during SLR for a small number of BWRs
- However, there are factors that can be applied to address embrittlement concerns
  - EOL fluence values only marginally exceed the threshold value
  - Recent structural evaluations indicate that 200 kJ/m^2 acceptance level assumed in NRC SE on BWRVIP-234 is conservative
- Plant-specific evaluation is recommended for plants with casting fluence exceeding $6x10^{20}$ n/cm^2 (E > 1 MeV)

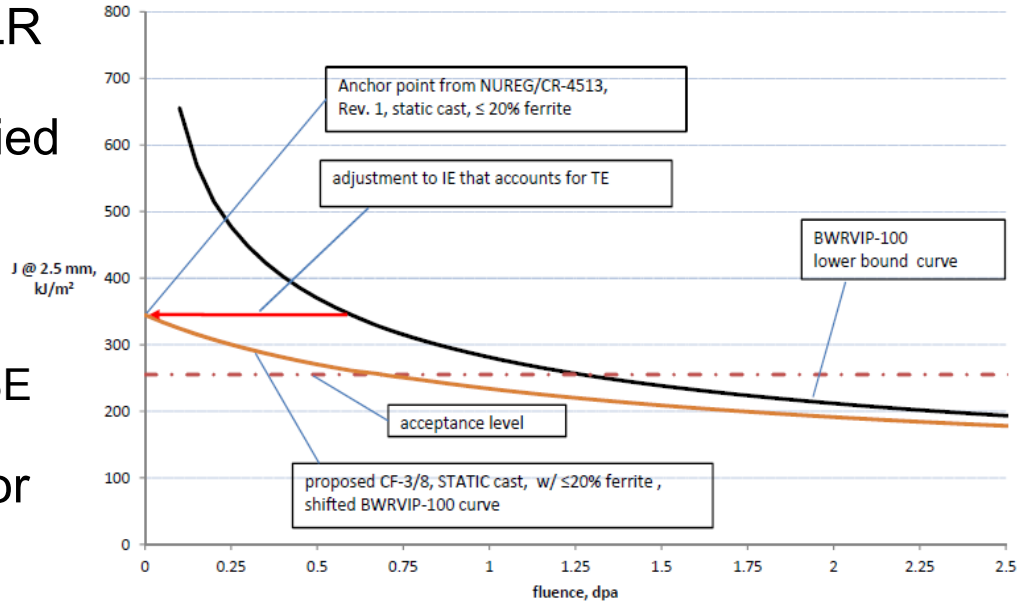

Plot of predicted lower-bound J @ 2.5 mm (BWRVIP-100 and NRC staff proposed) vs. neutron fluence.

(NRC SE for BWRVIP-234, Figure A1)

© 2018 Electric Power Research Institute, Inc. All rights reserved.

Management of Irradiation-Enhanced Stress Relaxation

- Only application of significance is core plate holddown bolts
- BWRVIP-25, Rev. 1, Appendix I includes a generic evaluation of core plate holddown bolt stress relaxation
- Includes a neutron fluence-based criterion for analysis applicability
- BWRVIP position is that plants can use the generic analysis as long as fluence remains less than the fluence used in the generic analysis (*not tied to any specific operating period*)
- Plant-specific evaluation needed prior to exceeding the fluence criterion in BWRVIP-25, Rev. 1
- Currently, the BWRVIP is developing responses to staff RAIs on BWRVIP-25, Rev. 1

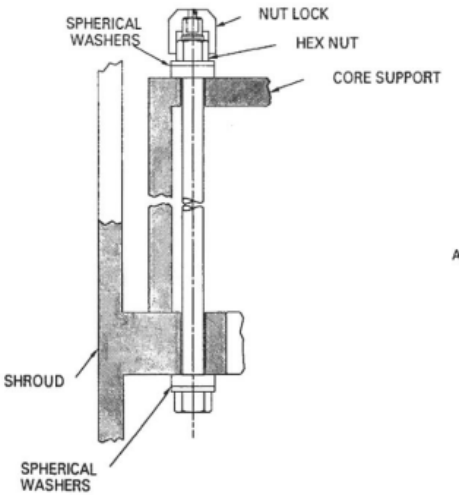

Typical Core Plate Holddown Bolt (from BWRVIP-25, Rev. 1 Appendix I)

© 2018 Electric Power Research Institute, Inc. All rights reserved.

Reactor Internals Technical Basis Report Conclusions

- No changes to periodic inspection requirements are necessary
- Limited number of enhancements to I&E guidance identified to ensure the impact of increased neutron fluence is appropriately considered by BWRVIP program owners Enhancements proposed for the following I&E Guidelines:
  - BWRVIP-41, Jet Pump
  - BWRVIP-42, LPCI Coupling
  - BWRVIP-47, Lower Plenum / Control Rod Guide Tubes
  - BWRVIP-76, Core Shroud
  - BWRVIP-26 / BWRVIP-183, Top Guide

© 2018 Electric Power Research Institute, Inc. All rights reserved.

BWRVIP-316, RPV Aging Management

- Represents a new version of BWRVIP-74
- Intended to address operation beyond 60 years
- Key topics addressed
  - Adequacy of existing programs to address SCC of RPV components
  - Upper Shelf Energy (USE)
  - Material Surveillance

© 2018 Electric Power Research Institute, Inc. All rights reserved.

RPV Aging Management – Inservice Inspection

- RPV aging management largely based on ASME Section XI requirements which have been found adequate based on evaluations documented in BWRVIP-06, Rev. 1-A & BWRVIP-74-A
- Conclusions remain appropriate for operation beyond 60 years
  - No evidence of significant adverse trends in IGSCC occurrence
  - Methods used to manage cracking are interval-based (independent of plant service time)

© 2018 Electric Power Research Institute, Inc. All rights reserved.

RPV Aging Management – Upper Shelf Energy (USE)

- RPV Shells and Welds
  - BWRVIP-74-A, Appendix B contains criteria for demonstrating adequate material toughness
  - Developed in the context of 60-year operation
  - Review of this analysis indicates sufficient conservatism exists in the "60-year" evaluation in BWRVIP-74-A to address SLR (72 EFPY assumed)
- Nozzle USE
  - GEH databases of SA-508 Cl. 1 and SA-508 Cl. 2 USE reviewed
  - Charpy values based on high shear data (i.e., data that are representative of upper shelf properties) indicate that USE less than regulatory requirements is statistically implausible
  - Limiting factor for some plants may be lack of high shear data for plant-specific material heats

© 2018 Electric Power Research Institute, Inc. All rights reserved.

RPV Weld Probabilistic Fracture Mechanics (PFM)

- BWRVIP-05 / BWRVIP-74-A provide a basis for exemption of BWR RPV circumferential welds from ISI
  - Many BWRs will need updated probabilistic analyses as a technical basis for RPV weld ISI exemptions and relief
  - Recent work by U.S. NRC and ORNL indicated significant conservatism in BWRVIP-05 approach
  - Use of the FAVOR Code can address limitations associated with both RPV circumferential and axial welds for initial LR and SLR (and beyond)
- BWRVIP performing a comprehensive analysis using FAVOR that can be used in lieu of the BWRVIP-05 / BWRVIP-74-A criteria
  - Initial results suggest that conditional failure probability not likely to be a limiting issue for any BWR

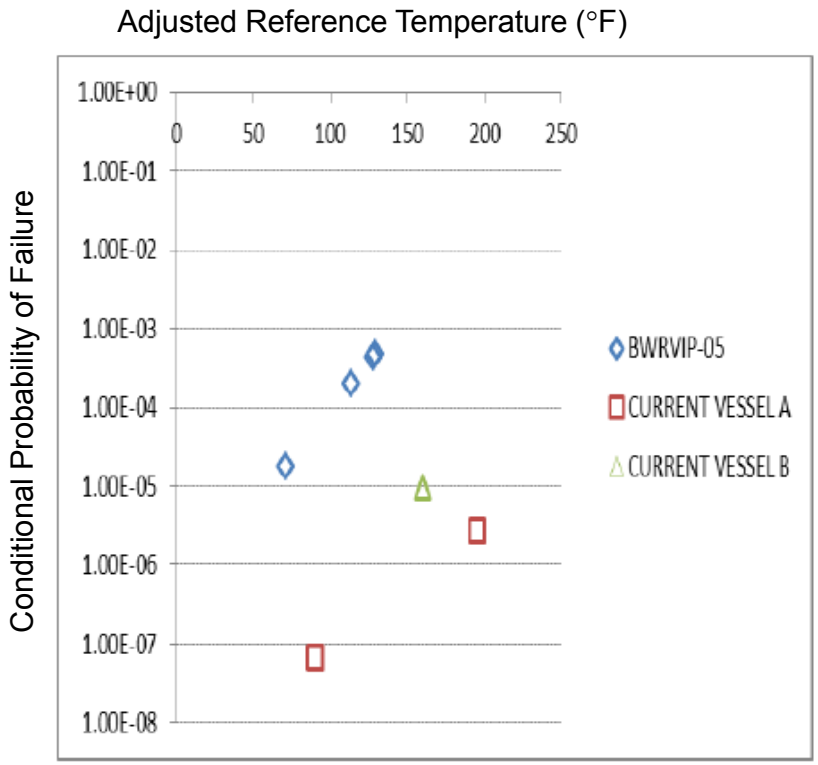

Source: PVP2015-45836, "Analysis of Circumferential Welds in BWRs for Life Beyond 60"

© 2018 Electric Power Research Institute, Inc. All rights reserved.

RPV Technical Basis Report – Material Surveillance

- Extension of the integrated surveillance program (ISP) used by U.S. BWRs for 60-year operation to address SLR remains the only significant technical issue identified
- Work on an ISP for SLR remains in progress
  - Details of the ISP for SLR discussed separately

© 2018 Electric Power Research Institute, Inc. All rights reserved.

Future Plans / Meetings

- June 2018:
  Completion of BWRVIP-315 (Reactor Internals SLR Technical Basis Report)
- June 13, 2018:
  Industry / NRC Meeting with NRC on ISP for SLR
- September 2018:
  Completion of BWRVIP-316 (RPV SLR Technical Basis Report)
- September 26, 2018:
  Industry / NRC Meeting on BWRVIP topics for SLR

© 2018 Electric Power Research Institute, Inc. All rights reserved.