Examination Outline Cross-reference:	Level	RO		SRO
	Tier #	1		
	Group #	1		
	K/A #	007 EA2.03		
	Importance Rating	4.2		
K/A: Reactor Trip: Ability to determine or interpret the following as they apply to a reactor trip: Reactor trip breaker position				

Question 1

Other than locally at the Reactor Trip Circuit Breakers (RTCB), where can ALL FOUR RTCB positions be verified following a Reactor trip?

1. PPS Status Panel
2. B05 Phase Current Lights
3. Supplemental Protection Logic Actuation Cabinets

A. 1 ONLY

B. 2 ONLY

C. 1 and 3 ONLY

D. 2 and 3 ONLY

Answer: C

Explanation:

A. Plausible since the PPS Status Panel is correct, however all 4 breaker positions can also be verified open at the SPLA Cabinets
B. Plausible since both phase current lights at B05 must be extinguished in order for the reactor to trip, however each light can be extinguished by one of two breakers opening, therefore all four RTCBs cannot be confirmed as open based solely on the status of these lights.
C. Correct.
D. Plausible since the SPLA Cabinets are correct, however B05 phase current lights cannot be used to confirm the status of all 4 RTCBs.

Question Source:	**X**	**Bank**	
		Modified Bank	
		New	
	x	**Previous NRC Exam**	2012 RO Exam

Question Cognitive Level:	**x**	**Memory or Fundamental Knowledge**
		Comprehension or Analysis
	2	**Level of Difficulty**

10 CFR Part 55 Content:	**41.6**

Reference Provided:	**None**

Learning Objective:	Describe the RPC controls and indications available for the operator at B05 and the PPS status panel (two objectives)

Technical Reference: Plant Protection System Tech Manual

RTSG Phase Current Indicator

These white lamps at the bottom of the channel C and D ROMs are normally on to indicate current flow to the CEDMs. If power through one leg of the RTSG is interrupted by RTSG opening, the appropriate lamps will go out (RTSGs 1 and/or 3 for the phase current lamp on the channel C ROM: RTSGs 2 and/or 4 for that on channel D).

Technical Reference: Plant Protection System Tech Manual

Figure 2 - 17 PPS Status Panels

These panels are mounted immediately above the front of the corresponding PPS cabinets. They contain trip path indicators for both the RPS and ESFAS. The color coded lamps correspond to the appropriate PPS channels (A-red, B-green, C-yellow, and D-blue). The lamps are normally on and will be extinguished when the PPS initiation circuit (trip path) is actuated in the corresponding channel.

The ESFAS portion of the status panel contains lamps identical to those provided on the ROMs for monitoring of initiation circuit relay status. Like those on the ROM, the lamps are normally on and will go out when the associated initiation relay is de-energized.

Immediately below each lamp on the CHANNEL A and CHANNEL B panels are two-out-of-four selective logic status monitors. Each is a split window, back-lit indicator. The upper portion is labeled "1-3" and the lower portion labeled "2-4". All sections of all windows should normally be on. A light will go out only when current flow through the appropriate leg of the auxiliary relay cabinet selective 2 out of 4 logic path has been interrupted. Both portions of the window should be extinguished when an actuation exists. The CHANNEL A lamps monitor status of the actuation circuits for the A safety equipment train. CHANNEL B monitors safety equipment train B.

Trip Path Indicators

A single indicator lamp provides the operator with RPS status in each trip path. The lamps are color coded to correspond to their appropriate PPS channels (A-red, B-green, C-yellow, and D-blue). The lamps are normally on. They will be extinguished when the RPS initiation circuit (trip path) is actuated in the corresponding channel.

RTSG Position

Status lamps (red closed, green open) are provided below the RPS trip path status lamps. RTSG-1, 2, 3 and 4 status is given on the channel A, B, C and D panels respectively.

Technical Reference: Plant Protection System Tech Manual (this is the Supplemental Protection Logic Actuation Cabinet below – there is one for each channel)

2.3.4 Annunciator and Indicator Module

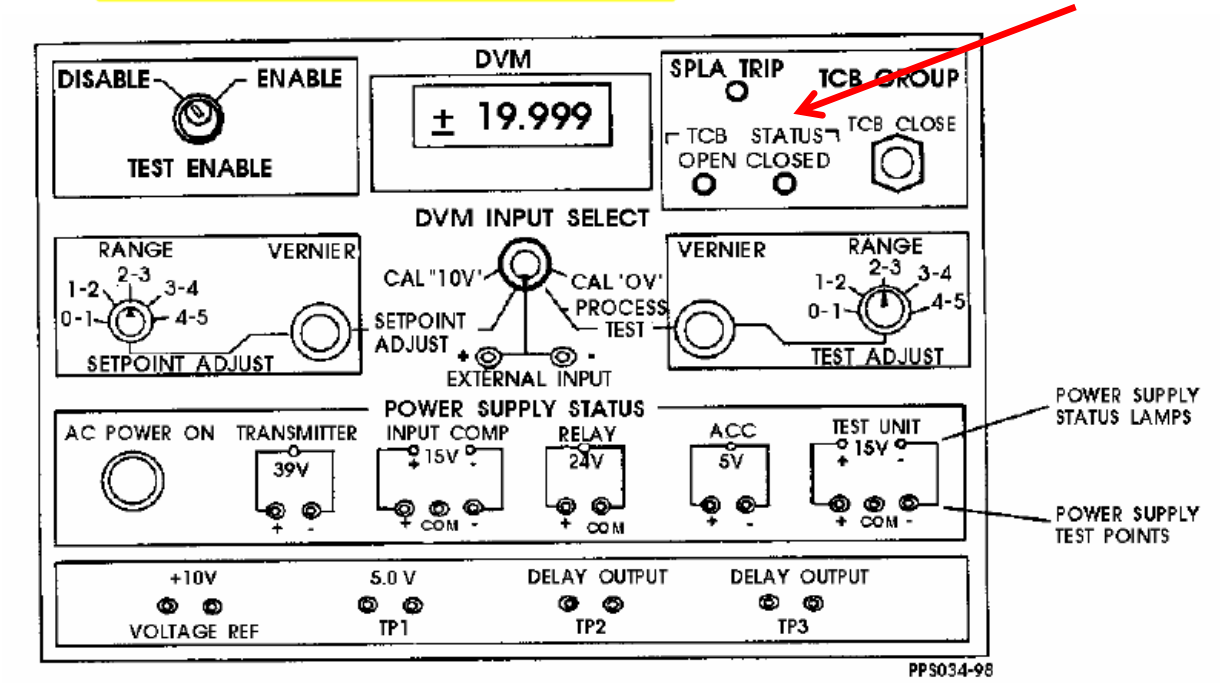

Figure 2 - 34 SPLA Cabinet Front Panel

The annunciator and indicator module provides the circuitry necessary for interfacing SPLA status signals with remote annunciators. The annunciator and indicator module processes the door alarm switch and the test enable switch function. The annunciator status signals actuate non-latching relays. The module also contains the isolation circuitry and fuses for the RTSG STATUS OPEN and CLOSED LEDs.

Examination Outline Cross-reference:	Level	RO		SRO
	Tier #	1		
	Group #	1		
	K/A #	CE/E02 EA1.02		
	Importance Rating	3.3		
K/A: Reactor Trip Recovery: Ability to operate and/or monitor the following as they apply to the Reactor Trip Recovery: Operating behavior characteristics of the facility				

Question 2

Following an uncomplicated Reactor trip from 100% power, with NO operator action, Pressurizer level will stabilize at ~ ___(1)___ and SG pressures will stabilize at ~ ___(2)___ .

A. (1) 33%
   (2) 1050 psia

B. (1) 33%
   (2) 1170 psia

C. (1) 52.5%
   (2) 1050 psia

D. (1) 52.5%
   (2) 1170 psia

Answer: B

Explanation:

A. First part is correct. Second part is plausible since 1050 psia is approximate SG pressure at full power. Additionally, SG levels are restored to their full power setpoint post-trip with no operator action, so it would be reasonable to believe SG pressures were also restored to their full power values.
B. Correct.
C. First part is plausible since 52.5% is the full power setpoint, and with no operator action it is reasonable to believe level would continue to be controlled at the full power setpoint (as SG level is), however pressurizer level setpoint is based on Tave and post-trip Tave will result in a setpoint of 33%. Second part is plausible since 1050 psia is approximate SG pressure at full power. Additionally, SG levels are restored to their full power setpoint post-trip with no operator action, so it would be reasonable to believe SG pressures were also restored to their full power values.
D. First part is plausible since 52.5% is the full power setpoint, and with no operator action it is reasonable to believe level would continue to be controlled at the full power setpoint (as SG level is), however pressurizer level setpoint is based on Tave and post-trip Tave will result in a setpoint of 33%. Second part is correct.

Question Source:		**Bank**	
		Modified Bank	
	x	**New**	
		Previous NRC Exam	

Question Cognitive Level:		**Memory or Fundamental Knowledge**
	x	**Comprehension or Analysis**
	3	**Level of Difficulty**

10 CFR Part 55 Content:	**41.5**

Reference Provided:	**None**

Learning Objective:	Describe the interrelationship between the PLCS and the following systems: Reactor Regulating System Describe the interrelationship between the SBCS system and the Main Steam System

Technical Reference: PLCS Tech Manual (post-trip Tave is automatically controlled to ~ 565°F by SBCS during an uncomplicated Rx trip)

2.2 Function Generator

The function generator is located in a control room process instrumentation cabinet. It calculates a pressurizer level setpoint based on the existing RCS T_{ave} supplied from the RRS. Below 567.7°F, which corresponds to 15% power, the level setpoint is held constant at a minimum value of 33%. Above 567.7°F and continuing up to normal full load RCS T_{ave} of approximately 583°F, the level setpoint is ramped linearly from 33% to a maximum of 52.6%. Above 583°F, the setpoint is constant at 52.6%.

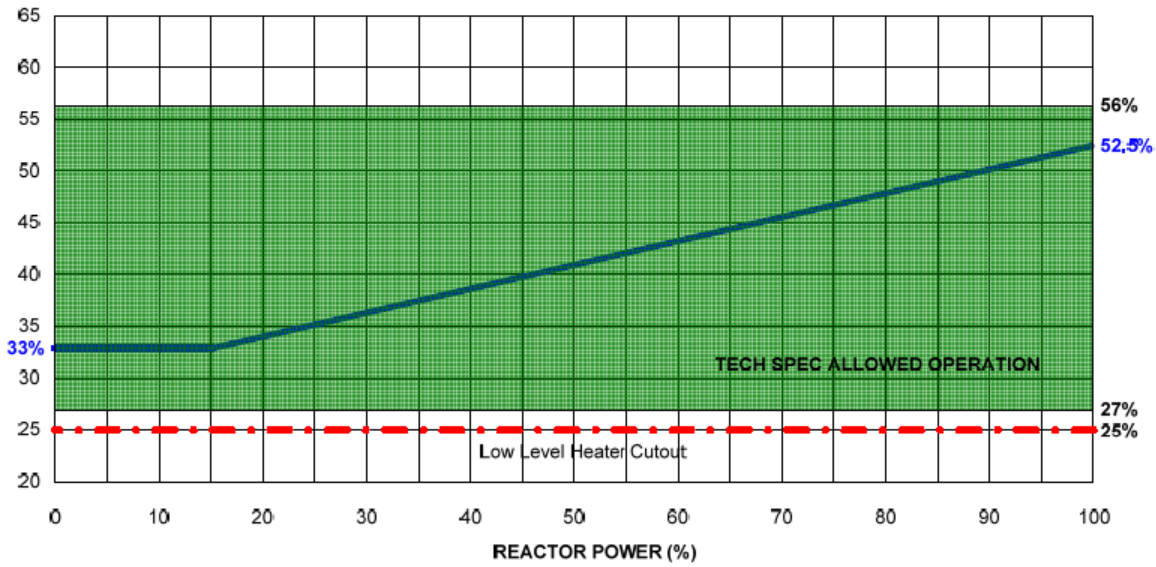

Technical Reference: SBCS Tech Manual

Plant Shutdown and Cooldown

The SBCS will not be needed during a plant shutdown until the main turbine is unloaded. Power is decreased from 100%, once power is low enough the turbine will be unloaded and the SBCS will open the steam bypass valves to maintain secondary pressure at 1170 psia. When the main turbine is secured the reactor is shutdown, and if desired a cooldown can begin.

3.4.1 Emergency Operations

When a reactor trip occurs, the main feedwater control and steam bypass control systems are designed to operate automatically to stabilize RCS temperature at 565°F.

- If the SBCS does not work automatically, the operator can take manual control to restore temperature. If manual control does not respond properly, the operator should establish temperature control using the main steam atmospheric dump valves (ADVs).

Examination Outline Cross-reference:	Level	RO		SRO
	Tier #	1		
	Group #	1		
	K/A #	008 G 2.2.37		
	Importance Rating	3.6		
K/A: Pressurizer Vapor Space Accident: Ability to determine operability and/or availability of safety related equipment				

Question 3

Given the following conditions:

- Unit 1 has just tripped from 100% power
- Pressurizer pressure is slowly lowering
- Pressurizer Relief Valve Status Panel on B04 shows a 9% Red LED lit for PSV-200

Which of the following describes the Pressurizer level response and the operability of the Pressurizer?

Pressurizer level will initially ___(1)___ and the Pressurizer will become INOPERABLE per LCO 3.4.9, Pressurizer, AS SOON AS Pressurizer level ___(2)___ .

A. (1) rise, then lower
(2) lowers to less than 10%

B. (1) rise, then lower
(2) lowers to less than 27%

C. (1) lower, then rise
(2) rises to greater than 56%

D. (1) lower, then rise
(2) rises to greater than 65%

Answer: C

Explanation:

A. First part is plausible since Pressurizer level lowers in all cases of RCS leaks, with the exception of a steam space LOCA. Second part is plausible since 10% is the bottom of the band for Pressurizer level acceptance criteria in SPTAs.
B. First part is plausible since Pressurizer level lowers in all cases of RCS leaks, with the exception of a steam space LOCA. Second part is plausible since 27% is the low end of the Pressurizer level band per LCO 3.4.9, Pressurizer, however in this case, pressurizer pressure will rise.
C. Correct.
D. First part is correct. Second part is plausible since 65% is the top of the band for Pressurizer level acceptance criteria in SPTAs.

Question Source:	**x**	**Bank**	PV – Q43773
		Modified Bank	
		New	
	x	**Previous NRC Exam**	2010 RO Exam

Question Cognitive Level:		**Memory or Fundamental Knowledge**
	x	**Comprehension or Analysis**
	3	**Level of Difficulty**

10 CFR Part 55 Content:	**41.14**

Reference Provided:	**None**

Learning Objective:	Determine whether or not the LCOs of 3.4 are satisfied

Technical Reference: LOIT LOCA Lesson Plan	
PZR STEAM SPACE	One of the more difficult leaks to diagnosis because this leak causes an initial drop in PZR level with a drop in RCS pressure. As the bubble forms elsewhere in the RCS (specifically the vessel), water will be pushed to the top of the PZR, resulting in level increasing. This was seen at TMI-2, which prompted the operators to turn off SI pumps. A leak in the pressurizer steam space will cause less of an inventory loss than the same size leak in a liquid portion of the RCS due to the density difference.

Technical Reference: Technical Specifications

3.4 REACTOR COOLANT SYSTEM (RCS)

3.4.9 Pressurizer

LCO 3.4.9 The pressurizer shall be OPERABLE with:

a. Pressurizer water level ≥ 27% and ≤ 56%; and

b. Two groups of pressurizer heaters OPERABLE with the capacity of each group ≥ 125 kW.

APPLICABILITY: MODES 1, 2, and 3.

Examination Outline Cross-reference:	Level	RO		SRO
	Tier #	1		
	Group #	1		
	K/A #	009 EK3.07		
	Importance Rating	3.3		
K/A: Small Break LOCA: Knowledge of the reasons for the following responses as they apply to the small break LOCA: Increasing indication on CCWS process monitor: indicates in-leakage of radioactive liquids				

Question 4

Given the following conditions:

- Unit 2 is operating at 100% power
- NC is cross-tied to Train ‘A’ EW

Which of the following events would cause a rising indication on Essential Cooling Water System Radiation Monitor, RU-2?

1. A leak in the 1B RCP HP Seal Cooler
2. A leak in the Fuel Pool Heat Exchanger
3. A leak in the Letdown Heat Exchanger

A. 1 ONLY

B. 2 ONLY

C. 1 and 3 ONLY

D. 2 and 3 ONLY

Answer: A

Explanation:

A. Correct. Although all 3 events would result in rising indications on the NC RM (RU-6), when cross-connected with EW, only the RCP HP Seal Cooler leak would be seen on RU-2.
B. Plausible since this would cause rising indication on RU-6, however not on RU-2 because EW system pressure is ~ 93 psig and Fuel Pool system pressure is ~ 45 psig to ensure any heat exchanger leakage goes from EW to the Fuel Pool.
C. Plausible since 1 is correct, and 3 would cause rising indication on RU-6, however 3 will not result in rising indication on RU-2.
D. Plausible since 2 and 3 would cause rising indication on RU-6, however they will not be seen by RU-2.

Question Source:		**Bank**	
		Modified Bank	
	x	**New**	
		Previous NRC Exam	

Question Cognitive Level:		**Memory or Fundamental Knowledge**
	x	**Comprehension or Analysis**
	3	**Level of Difficulty**

10 CFR Part 55 Content:	**41.11**

Reference Provided:	**None**

Learning Objective:	Given a radiation monitor number and name, describe the purpose and sample points of the RM at PVNGS

Technical Reference: Nuclear Cooling Water Tech Manual

The letdown HX is a non-priority load and is therefore "cutout" of the system when NC is cross-connected with EW.

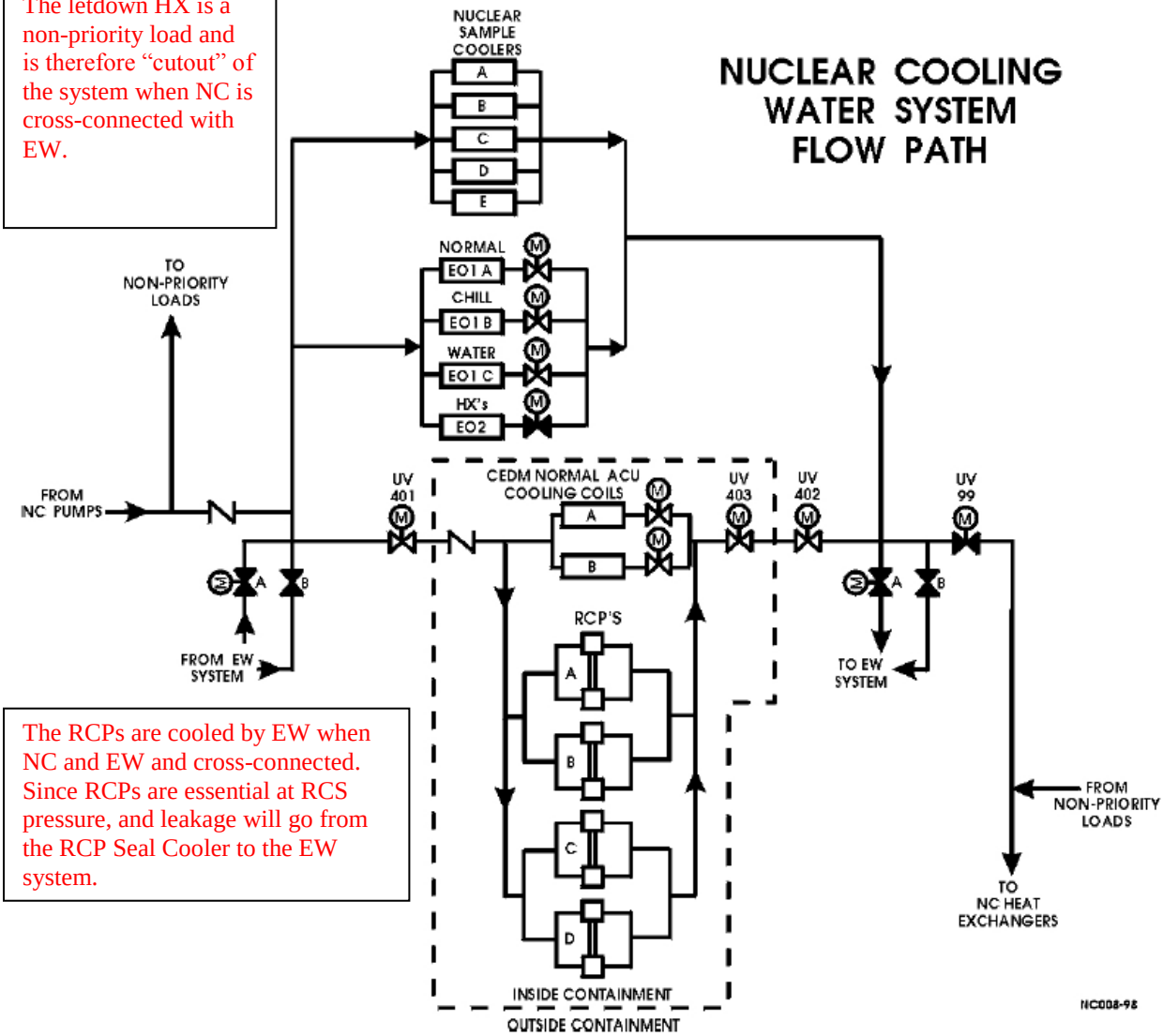

The RCPs are cooled by EW when NC and EW and cross-connected. Since RCPs are essential at RCS pressure, and leakage will go from the RCP Seal Cooler to the EW system.

Technical Reference: Essential Cooling Water Tech Manual

Manual Operation of a Train

To startup a train of the EW system, the SP system must first be started, the radiation monitor must be on-line and a pre-start check of the pump must be completed. The SP system provides the cooling medium for the EW system. The radiation monitor will ensure that any leakage into the EW system is detected as soon as possible. The pre-start check of the pump ensures the pump is ready for operation before a start attempt is made.

To start the EW Pump, a local discharge pressure isolation valve is opened, the EW Pump is started, and the operator verifies normal discharge pressure of ~ 93 psig and running current < 103 amps. This will ensure the EW Pump is running normally after the pump is started.

Technical Reference: Spent Fuel Pool Cooling and Cleanup Tech Manual
The PC cooling pumps and heat exchangers are located on the 100' elevation of the fuel building beneath the new fuel storage racks. PC cooling system nominal operating conditions are 45 psig pump discharge pressure, 95-100°F spent fuel pool temperature and 2000 gpm flow rate with one pump running.

Examination Outline Cross-reference:	Level	RO		SRO
	Tier #	1		
	Group #	1		
	K/A #	015/17 AK2.07		
	Importance Rating	2.9		
K/A: RCP Malfunctions: Knowledge of the interrelations between the Reactor Coolant Pump Malfunctions (Loss of RC Flow) and the following: RCP seals				

Question 5

Given the following RCP Seal Pressure indications on B04:

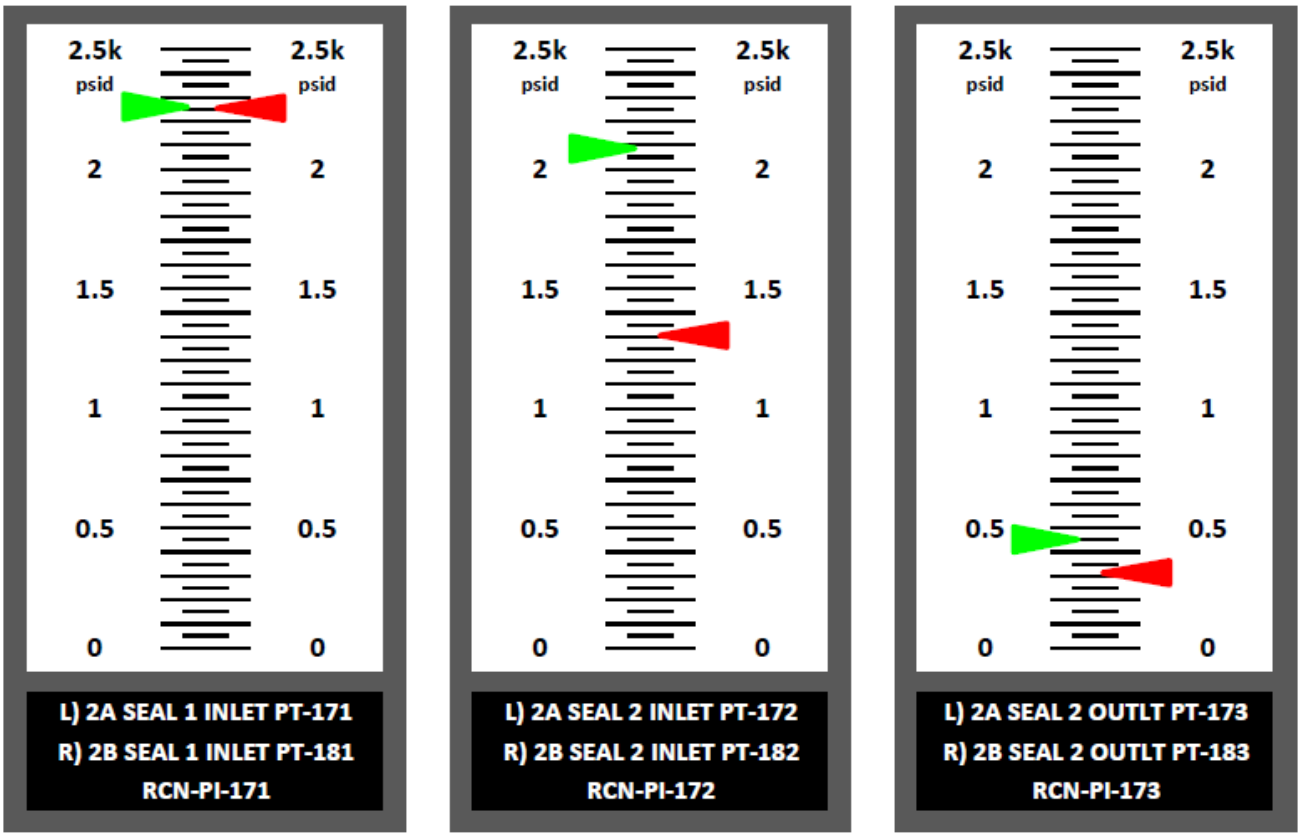

Based on the provided indications, which of the following faults has occurred?

A. 2A RCP Seal 1 has failed

B. 2A RCP Seal 2 has failed

C. 2B RCP Seal 1 has failed

D. 2B RCP Seal 2 has failed

Answer: A

Explanation:

A. Correct.
B. Plausible since RCP 2A Seal 2 outlet pressure is ~ 1.5 times higher than normal, however that is due to the failure of Seal 1.
C. Plausible since the pressure drop is significantly different than the pressure drop on RCP 2A, however the pressure drop on RCP 2B is the normal design pressure drop.
D. Plausible since the pressure drop is significantly different than the pressure drop on RCP 2A, however the pressure drop on RCP 2B is the normal design pressure drop.

Question Source:		**Bank**	
		Modified Bank	
	x	**New**	
		Previous NRC Exam	

Question Cognitive Level:		**Memory or Fundamental Knowledge**
	x	**Comprehension or Analysis**
	3	**Level of Difficulty**

10 CFR Part 55 Content:	**41.2**

Reference Provided:	**None**

Learning Objective:	Diagnose which seals have failed

Technical Reference: 40AO-9ZZ04, RCP Emergencies

Appendix G, RCP Normal Seal Staging Data

RCS Pressure (psia)	Seal #2 Inlet Pressure (psig)	Seal #2 Outlet Pressure (psig)
2250	1280	315
2000	1140	280
1750	1000	250
1500	855	210
1250	715	180
1000	570	140
750	430	110
500	285	70

Examination Outline Cross-reference:	Level	RO		SRO
	Tier #	1		
	Group #	1		
	K/A #	022 AK1.01		
	Importance Rating	2.8		
K/A: Loss of Rx Coolant Makeup: Knowledge of the operational implications of the following concepts as they apply to the Loss of Rx Coolant Makeup: Consequences of thermal shock to RCP seals				

Question 6

Per 40EP-9EO08, Blackout, Charging Pumps are ___(1)___ in order to prevent a potential RCS leak due to thermal shock of the ___(2)___ when power is restored.

A. (1) placed in Pull To Lock
(2) Reactor Coolant Pump Seals

B. (1) placed in Pull To Lock
(2) Regenerative Heat Exchanger

C. (1) aligned to the alternate discharge header
(2) Reactor Coolant Pump Seals

D. (1) aligned to the alternate discharge header
(2) Regenerative Heat Exchanger

Answer: A

Explanation:

A. Correct.
B. First part is correct. Second part is plausible since power being restored to the Charging Pumps without the pumps in pull to lock would result in cold charging flow being sent through a hot HX, however the reason for this action is to prevent shocking the RCP seals via an uncontrolled restoration of seal injection.
C. First part is plausible since the primary concern regarding charging pumps is to prevent an uncontrolled re-initiation of seal injection, and aligning the charging pumps to the alternate discharge header would divert flow from the RCP seals, however the correct action is to place the charging pumps in pull to lock. Second part is correct.
D. First part is plausible since the primary concern regarding charging pumps is to prevent an uncontrolled re-initiation of seal injection, and aligning the charging pumps to the alternate discharge header would divert flow from the regenerative heat exchanger, however the correct action is to place the charging pumps in pull to lock. Second part is plausible since power being restored to the Charging Pumps would result in cold charging flow being sent through a hot HX, and aligning the charging pumps to the alternate discharge header would bypass flow around the regenerative heat exchanger, however the reason for this action is to prevent shocking the RCP seals via an uncontrolled restoration of seal injection.

Question Source:		**Bank**	
		Modified Bank	
	x	**New**	
		Previous NRC Exam	

Question Cognitive Level:	**x**	**Memory or Fundamental Knowledge**
		Comprehension or Analysis
	3	**Level of Difficulty**

10 CFR Part 55 Content:	**41.10**

Reference Provided:	**None**

Learning Objective:	State the reasons that all Charging Pumps are placed in PTL during a blackout

Technical Reference: 40EP-9EO08, Blackout

PALO VERDE NUCLEAR GENERATING STATION BLACKOUT	40EP-9EO08 Revision 25 Page 5 of 43

INSTRUCTIONS	CONTINGENCY ACTIONS

NOTE

All operations involving the SBOGs and notification to Security will be coordinated through Unit 1.

✱ 6. **IF** the Outside Area Operator is located in the Protected Area (PA) or the Security Owner Controlled Area (SOCA), **THEN** notify CAS (ext 6470) of the following: a. A unit blackout is in progress (operations emergency). b. Request a Security Mobile to meet the Outside Area Operator at the WRF SOCA gate (near the SBOG).	
✱ 7. **IF** the Outside Area Operator is located in the PA or SOCA, **AND** a Security Officer has been dispatched to open the WRF SOCA gate, **THEN** direct the Outside Area Operator to perform the following: a. Meet a Security Officer at the WRF SOCA gate (for SBOG access). b. Start a SBOG per 40EP-9EO10, Appendix 111, Station Blackout Generator Operation. c. Energize NAN-S07.	7.1 Direct the Outside Area Operator to perform the following: a. Travel directly to the SBOGs. b. Start a SBOG per 40EP-9EO10, Appendix 111, Station Blackout Generator Operation. c. Energize NAN-S07.
8. Place all of the Charging Pump handswitches in "PULL TO LOCK."	

Technical Reference: 40DP-9AP13, Blackout Technical Guideline

4.5.8 Step 8 - Place Charging Pumps in PULL TO LOCK

A. All charging and seal injection will be lost due to the Blackout and restoration will need to be controlled in order to minimize the possibility of seal damage. Placing the charging pump handswitches in PULL TO LOCK at this point in the procedure allows restoration of power from any source without an uncontrolled resumption of seal injection.

Examination Outline Cross-reference:	Level	RO		SRO
	Tier #	1		
	Group #	1		
	K/A #	025 G 2.4.31		
	Importance Rating	4.2		
K/A: Loss of RHR System: Knowledge of annunciator alarms, indications, or response procedures				

Question 7

Given the following conditions:

- Unit 2 is in MODE 5
- Train ‘A’ SDC is in service using LPSI Pump ‘A’

Subsequently:

- The ‘A’ LPSI Pump tripped due to an 86 lockout

The crew will be alerted of the loss of the ‘A’ LPSI Pump by a ___(1)___ on the SESS Panel and annunciator 2B06A, SDC TRAIN A/B FLOW LO, ___(2)___ annunciate.

A. (1) white light ONLY
(2) WILL

B. (1) white light ONLY
(2) will NOT

C. (1) white light AND a blue light
(2) WILL

D. (1) white light AND a blue light
(2) will NOT

Answer: B

Explanation:

A. First part is correct. Second part is plausible since the trip of the LPSI pump will result in a loss of SDC flow, however in order for that alarm to annunciate, the SDC pump breaker must be closed, therefore on a loss of flow due to a pump trip, the SDC Train A/B Low Flow alarm does not come in.
B. Correct.
C. First part is plausible since the blue SESS alarm indicates that a piece of equipment which should be running is not running, however this is only for ESF equipment which is running due to an ESF actuation. Second part is plausible since the trip of the LPSI pump will result in a loss of SDC flow, however in order for that alarm to annunciate, the SDC pump breaker must be closed, therefore on a loss of flow due to a pump trip, the SDC Train A/B Low Flow alarm does not come in.
D. First part is plausible since the blue SESS alarm indicates that a piece of equipment which should be running is not running, however this is only for ESF equipment which is running due to an ESF actuation. Second part is correct.

Question Source:		**Bank**	
	x	**Modified Bank**	PV – Q15882
		New	
		Previous NRC Exam	

Question Cognitive Level:		**Memory or Fundamental Knowledge**
	x	**Comprehension or Analysis**
	3	**Level of Difficulty**

10 CFR Part 55 Content:	**41.7**

Reference Provided:	**None**

Learning Objective:	Explain the operation of the SESS system field inputs under normal operating conditions

Original Question: Q15882

Given the following conditions:

- Unit 2 is in MODE 5.
- Train 'A' Shutdown Cooling is in service using LPSI 'A'.
- The breaker for LPSI pump 'A' spuriously trips open and locks out (86).

Which ONE of the following alarms will warn the crew of the breaker trip?

A. RK Window 2B06A, 'SDC Train A/B Low Flow' only.

B. ERFDADS and SESS window only without audible alarm.

C. RK window 2B06A, 'SDC Train A/B Low Flow' and ERFDADS only.

D. ERFDADS, SESS, and RK window 2B06A, 'SDC Train A/B Low Flow'.

Technical Reference: LOIT Safety Injection Lesson Plan

SDC TRAIN A/B FLOW LO	**This alarm has two setpoints depending on the number of SDC pumps operating. The flow transmitter senses total SDC loop flow upstream of where the line branches to the individual loop injection valves. The setpoint for one pump is below the minimum Tech Spec SDC flow limit and thus requires immediate attention.** ***AMBER***

One <u>VERY IMPORTANT</u> point about this particular alarm:

If the running LPSI pump trips, this alarm <u>won't</u> come in because breaker position is in the alarm logic circuitry!

The operator would get a SEIS alarm (white inoperable light) should this occur. But if another piece of equipment is already inoperable in that group, then the audible SEIS won't come in. The long and short of it is that this can be a fairly silent loss of SDC flow. That is the reason an audible ERFDADS alarm for SDC flow is established.

Examination Outline Cross-reference:	Level	RO		SRO
	Tier #	1		
	Group #	1		
	K/A #	027 AA1.01		
	Importance Rating	4.0		
K/A: Pressurizer Pressure Control System Malfunctions: Ability to operate and/or monitor the following as they apply to the Pressurizer Pressure Control Malfunctions: PZR heaters, sprays, and PORVs				

Question 8

Given the following conditions:

- Unit 3 is operating at 100% power
- Level Control Channel Selector Switch RCN-HS-110 is selected to Channel ‘X’
- Pressurizer Heater Control Level Trip Selector Switch RCN-HS-100-3 is selected to ‘BOTH’
- The Pressurizer is in boron equalization using only the non-class backup heaters

In this condition, how would the Pressurizer Pressure Control System respond to the following failures?

(1) If Pressurizer Level Transmitter, RCB-LT-110Y, fails off-scale HIGH, the CLASS backup heaters...

(2) If Pressurizer Level Transmitter, RCB-LT-110Y, fails off-scale LOW, the NON-CLASS backup heaters…

A. (1) will energize
(2) will trip

B. (1) will energize
(2) will remain energized

C. (1) will remain off
(2) will trip

D. (1) will remain off
(2) will remain energized

Answer: C

Explanation:

A. First part is plausible since all backup heaters energize when pressurizer level is 3% above setpoint, however this only occurs if the level selector switch is selected to the channel which indicates > 3% above setpoint. Second part is correct.
B. First part is plausible since all backup heaters energize when pressurizer level is 3% above setpoint, however this only occurs if the level selector switch is selected to the channel which indicates > 3% above setpoint. Second part is plausible since the low level cutout is selected to BOTH which implies that both level transmitters must fall below 25% to cutout the heaters on low level, however in this position a low level on EITHER level transmitter will result in all heaters tripping.
C. Correct.
D. First part is correct. Second part is plausible since the low level cutout is selected to BOTH which implies that both level transmitters must fall below 25% to cutout the heaters on low level, however in this position a low level on EITHER level transmitter will result in all heaters tripping.

Question Source:		**Bank**	
		Modified Bank	
	x	**New**	
		Previous NRC Exam	

Question Cognitive Level:		**Memory or Fundamental Knowledge**
	x	**Comprehension or Analysis**
	3	**Level of Difficulty**

10 CFR Part 55 Content:	**41.3**

Reference Provided:	**None**

Learning Objective:	Describe the function and operation of the Pressurizer Heaters to the PPCS

Technical Reference: PVNGS Operator Information Manual

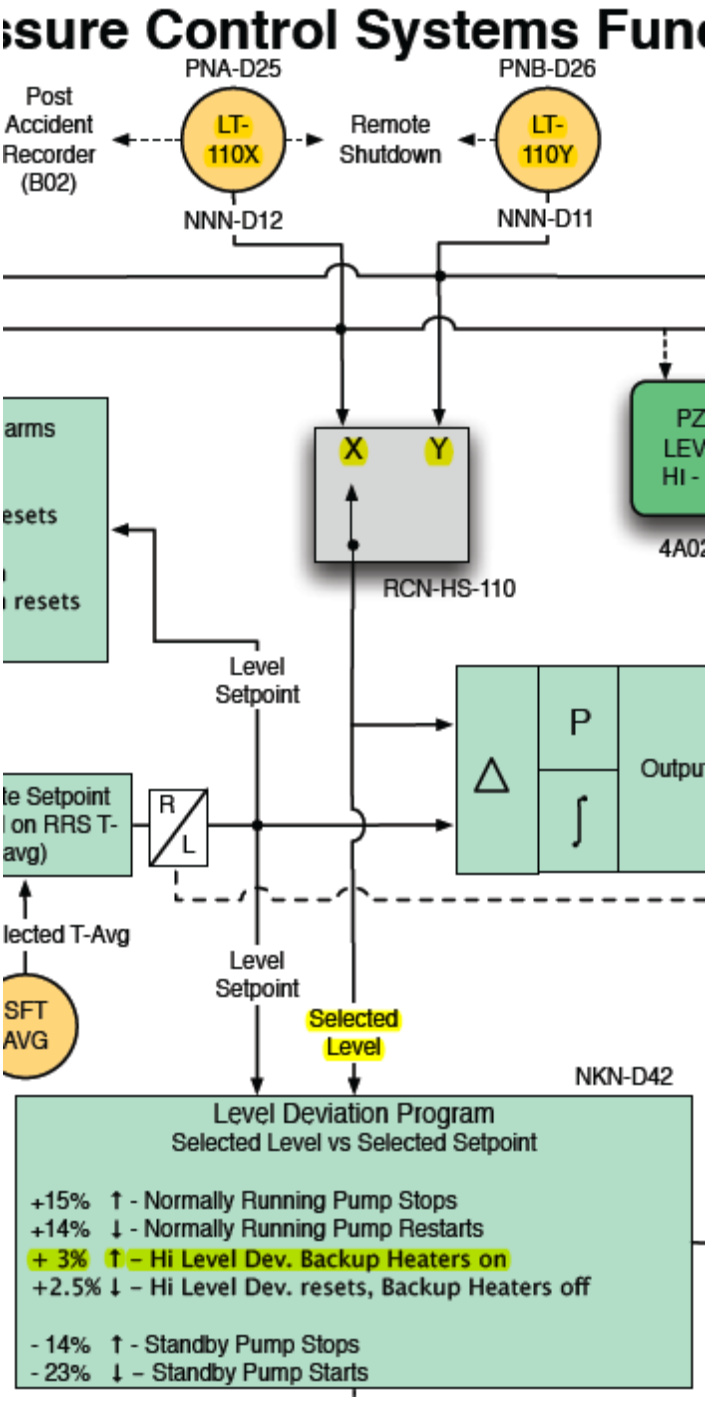

When the indicated level is > 3% above setpoint, all heaters will energize, however this is only the case when the SELECTED level is > 3% above setpoint, therefore heaters will not energize in response to this failure.

Technical Reference: PVNGS Operator Information Manual

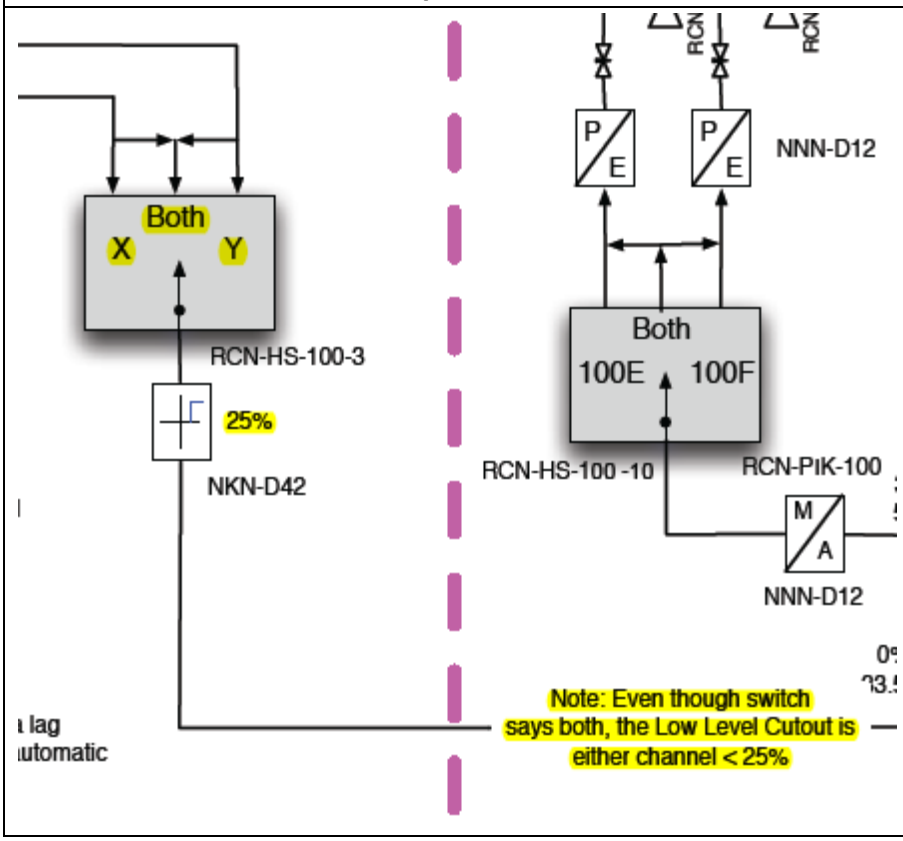

Even though HS-100-3 is selected to BOTH, implying that both level indicators must read < 25% to cutout the heaters, either level transmitter indicating < 25% will trip the heaters on low level cutout.

Examination Outline Cross-reference:	Level	RO		SRO
	Tier #	1		
	Group #	1		
	K/A #	029 EK3.12		
	Importance Rating	4.4		
K/A: ATWS: Knowledge of the reasons for the following responses as they apply to the ATWS: Actions contained in EOP for ATWS				

Question 9

Given the following conditions:

- The Reactor failed to automatically trip following a valid RPS trip signal
- Manual Reactor Trip Pushbuttons failed to trip the Reactor
- NGN-L03B2 breaker was manually opened
- NGN-L10B2 breaker failed to open

The next action the crew should take is to ___(1)___ in order to de-energize the ___(2)___ .

A. (1) open NGN-S02F, Feeder Breaker for NGN-L10
(2) CEDMCS bus DIRECTLY

B. (1) open NGN-S02F, Feeder Breaker for NGN-L10
(2) running CEDM MG set, which will de-energize the CEDMCS bus

C. (1) dispatch an operator to locally open Reactor Trip Circuit Breakers
(2) CEDMCS bus DIRECTLY

D. (1) dispatch an operator to locally open Reactor Trip Circuit Breakers
(2) running CEDM MG set, which will de-energize the CEDMCS bus

Answer: C

Explanation:

A. First part is plausible since de-energizing NGN-L10 would be the correct action, however we do not “go upstream” if the B2 breaker does not open. Second part is correct.
B. First part is plausible since de-energizing NGN-L10 would be the correct action, however we do not “go upstream” if the B2 breaker does not open. Second part is plausible since de-energizing L10 does stop the running MG set which will in turn de-energize the CEDMCS Bus, however going upstream of L10 is not the correct action to take.
C. Correct.
D. First part is correct. Second part is plausible since the first response to an ATWS is to open L03 and L10 B2 breakers which will stop the running CEDM MG sets, however opening the RTCBs locally will de-energize the CEDMCS Bus directly and the MG sets will remain running.

Question Source:		**Bank**	
		Modified Bank	
	x	**New**	
		Previous NRC Exam	

Question Cognitive Level:		**Memory or Fundamental Knowledge**
	x	**Comprehension or Analysis**
	2	**Level of Difficulty**

10 CFR Part 55 Content:	**41.10**

Reference Provided:	**None**

Learning Objective:	Given a reactor trip describe the EOP expectation concerning the operation of the input breakers for L03 and L10

Technical Reference: PVNGS Operator Information Manual

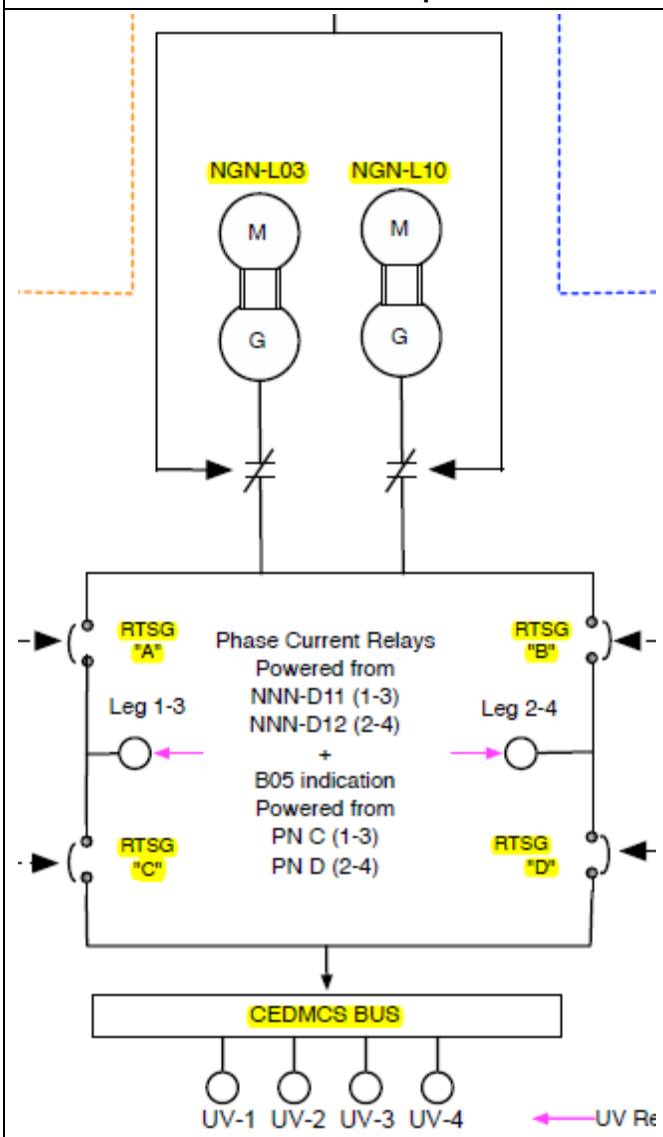

Opening the RTCBs locally will directly de-energize the CEDMCS bus, tripping the reactor. Opening NGN-L10 (or the upstream breaker) will de-energize the MG set, indirectly de-energizing the CEDMCS bus.

Technical Reference: PVNGS Operator Information Manual

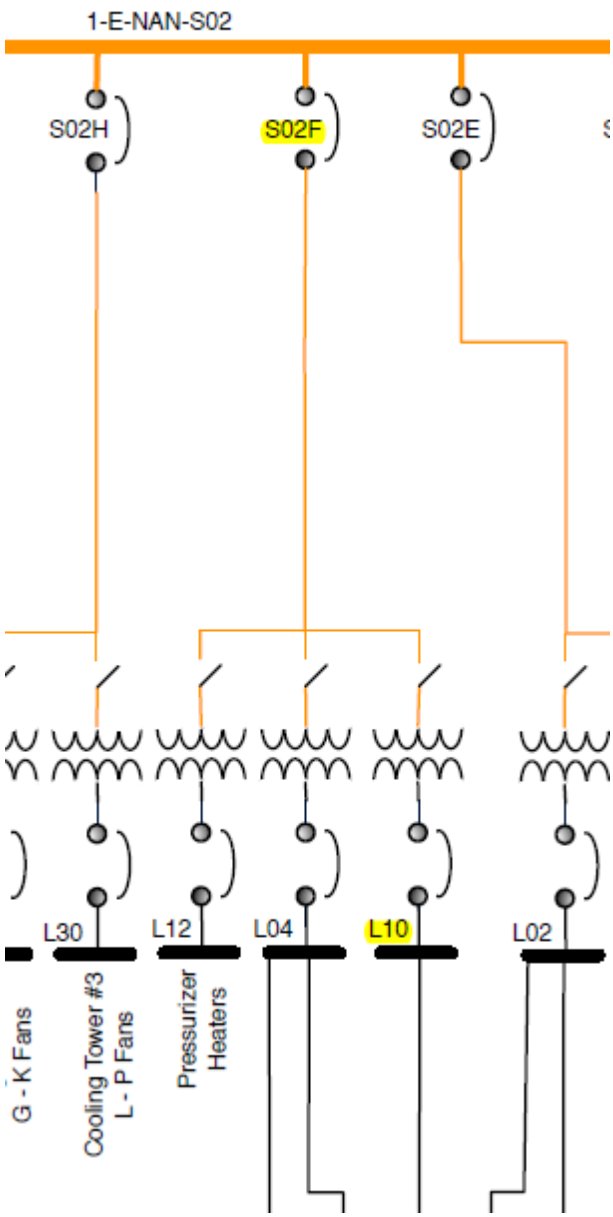

Technical Reference: 40EP-9EO01, SPTAs

PALO VERDE NUCLEAR GENERATING STATION STANDARD POST TRIP ACTIONS	40EP-9EO01 Revision 22 Page 4 of 16

INSTRUCTIONS	CONTINGENCY ACTIONS
NOTE Reactivity Control substeps are Immediate Actions.	
2. Determine that Reactivity Control acceptance criteria are met by the following:	
a. Check that reactor power is dropping.	a.1 Manually trip the Reactor. a.2 **IF** the Reactor is **NOT** tripped, **THEN** open **BOTH** of the following supply breakers: • NGN-L03B2 • NGN-L10B2 a.3 **IF** the Reactor is **NOT** tripped, **THEN** direct an operator to open the reactor trip breakers.

Examination Outline Cross-reference:	Level	RO		SRO
	Tier #	1		
	Group #	1		
	K/A #	CE/E05 EA2.02		
	Importance Rating	3.4		
K/A: Excess Steam Demand: Ability to determine and interpret the following as they apply to the Excess Steam Demand: Adherence to appropriate procedures and operation within the limitations in the facility's license and amendments				

Question 10

Given the following conditions:

- The Reactor was tripped due to an ESD inside Containment
- At time = 1003, the crew recognized that the ESD in progress was from SG #1
- At time = 1009, the crew FIRST noticed SG #1 had reached dryout by observing the Loop 1 Tcold trend below:

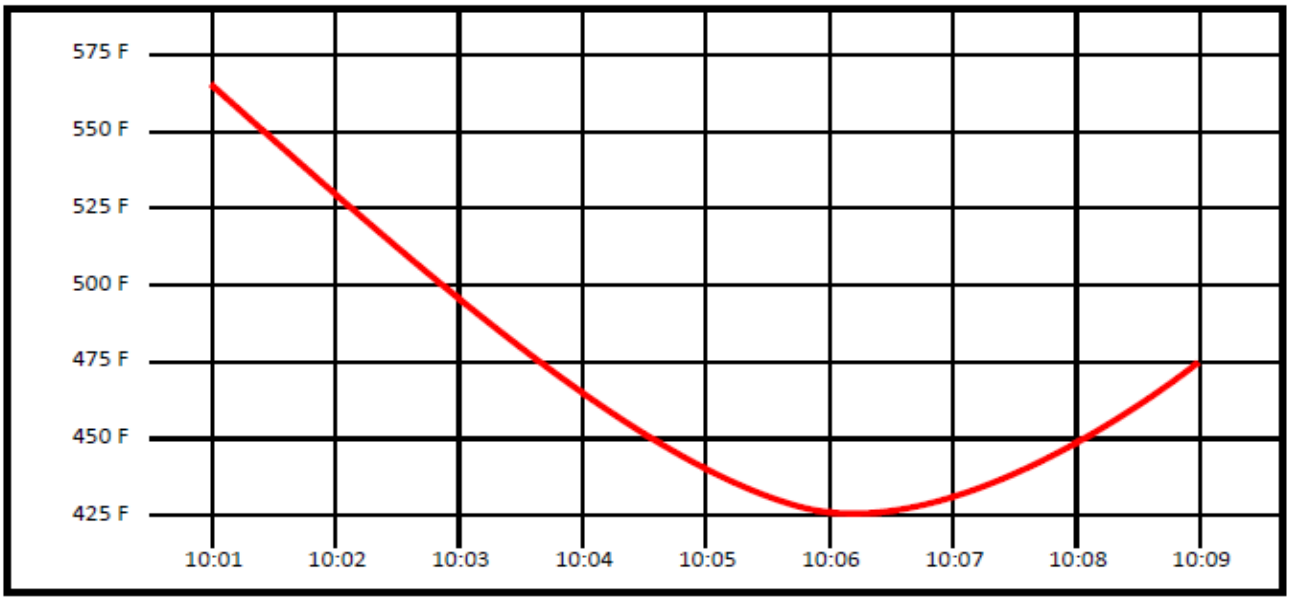

(1) The crew should establish a pressure band on SG #2 of…

(2) Per EOP Operations Expectations, depressurization of SG #2 during an ESD should be commenced…

A. (1) 300-350 psig
(2) BEFORE SG #1 reaches dryout

B. (1) 300-350 psig
(2) AFTER SG #1 reaches dryout

C. (1) 525-575 psig
(2) BEFORE SG #1 reaches dryout

D. (1) 525-575 psig
(2) AFTER SG #1 reaches dryout

Answer: D

Explanation:

A. First part is plausible since 300-350 psig corresponds to the lowest Tcold value which occurred during the ESD, however at PVNGS, the lowest OBSERVED Tcold is used to establish a SG pressure band. Second part is plausible since commencing a depressurization of the unaffected SG prior to dryout on the affected SG will minimize the likelihood for PTS since heat removal will be controlled at the temp/press where dryout occurred, however at PVNGS, the unaffected SG is not depressurized until dryout has occurred on the affected SG to prevent exacerbating the RCS cooldown.
B. First part is plausible since 300-350 psig corresponds to the lowest Tcold value which occurred during the ESD, however at PVNGS, the lowest OBSERVED Tcold is used to establish a SG pressure band. Second part is correct.
C. First part is correct. Second part is plausible since commencing a depressurization of the unaffected SG prior to dryout on the affected SG will minimize the likelihood for PTS since heat removal will be controlled at the temp/press where dryout occurred, however at PVNGS, the unaffected SG is not depressurized until dryout has occurred on the affected SG to prevent exacerbating the RCS cooldown.
D. Correct.

Question Source:		**Bank**	
		Modified Bank	
	x	**New**	
		Previous NRC Exam	

Question Cognitive Level:		**Memory or Fundamental Knowledge**
	x	**Comprehension or Analysis**
	3	**Level of Difficulty**

10 CFR Part 55 Content:	**41.10**

Reference Provided:	**Steam Tables**

Learning Objective:	Determine when and how RCS temperature is stabilized during an ESD

Technical Reference: EOP Opeations Expectations

PALO VERDE NUCLEAR GENERATING STATION EOP OPERATIONS EXPECTATIONS	Revision 22 Page 22 of 50

ESD Step 14

1. This step minimizes the effects of the temperature rebound which occurs when the faulted SG dries out. The basis states that a controlled heat removal method should be established before the dryout condition occurs. This does not mean to follow the faulted SG pressure down with the good SG. Doing so invalidates the safety analysis of the UFSAR. This statement is only intended to ensure a heat removal method is available on the good SG. Lowering the good SG pressure to the established target shall only be done when the faulted SG is dry. The target pressure for the non-faulted SG is determined from the lowest Tc of the RCS. When the faulted SG dries out, as indicated by RCS temperatures rising, the lowest Tc is noted and the saturation pressure for this temperature is determined from the steam tables. This pressure is the target pressure for the non-faulted SG. If the operator recognizes Tc has risen sometime after SG dry out, they should use the observed Tc at that time to determine the target pressure for the intact SG in order to stabilize at the existing plant conditions and prevent another unnecessary cooldown.

Technical Reference: LOIT Lesson Plan – ESD

EO: 1.6 **Given a set of plant parameters, determine when and how RCS temperature is stabilized during an ESD per 40EP-9EO05.**

Introduction

The actions taken to stabilize T_c are central to an effective response to an ESD and must be well known and practiced by every Control Room crew member.

Failing to perform these actions properly can result in Pressurized Thermal Shock of the RCS . These actions are also performed in SPTAs should an ESD exist before the ORP is entered.

Main Idea

In order to minimize RCS heatup following the blowdown, a controllable heat removal method should be established before the affected steam generator dries out. The preferred method of heat removal is the SBCS (if the Condenser is available) with the ADVs as a backup method of heat removal. If the break location prevents use of the SBCS or if MSIS has occurred, then ADVs should be used for RCS heat removal.

The target pressure for the **non-faulted** SG is determined from the lowest T_c. When the faulted SG dries out, as indicated by RCS temperatures rising, the lowest T_c is noted and the saturation pressure for this temperature is determined from the steam tables. This pressure is the target pressure for the **non-faulted SG.**

The method chosen for RCS heat removal should not cause the RCS to cool down to a lower temperature than that caused by the event until a controlled cooldown is initiated.

Explanation

QUESTION: Is it acceptable to "follow the affected SG pressure down" with the unaffected SG before the blowdown phase is complete?

ANSWER: NO! Although this is done at other CE plants (Calvert Cliffs, for instance), it is not done here because it is assumed that the operator does nothing to exacerbate the cooldown rate, even if that means, as it does here, reducing the heat input of the unaffected SG.

Tell the class that this guidance, along with the specific means of stabilizing RCS temperature, is not found in the ESD EOP or in the Technical Guide but in the Ops Expectations.

Examination Outline Cross-reference:	Level	RO		SRO
	Tier #	1		
	Group #	1		
	K/A #	054 AA1.03		
	Importance Rating	3.5		
K/A: Loss of Main Feedwater: Ability to operate and/or monitor the following as they apply to the Loss of Main Feedwater: AFW auxiliaries, including oil cooling water supply				

Question 11

Given the following conditions:

- Unit 3 tripped from 100% due to a complete loss of Main Feedwater
- Offsite power was lost on the trip
- The ‘B’ EDG tripped on overspeed

In this condition, the preferred Auxiliary Feedwater Pump to feed SGs with is ___(1)___ and the primary source of cooling to the AFW Pump bearing oil will be supplied by ___(2)___ .

A. (1) AFA-P01
(2) Train ‘A’ Essential Cooling Water

B. (1) AFA-P01
(2) the discharge of the running AFW pump

C. (1) AFN-P01
(2) Train ‘A’ Essential Cooling Water

D. (1) AFN-P01
(2) the discharge of the running AFW pump

Answer: B

Explanation:

A. First part is correct. Second part is plausible since EW provides cooling water to several safety related pumps, however AF pumps have their bearings cooled by the discharge of the pumps.
B. Correct.
C. First part is plausible since AFN is preferred over AFA for all conditions EXCEPT a loss of offsite power. Second part is plausible since EW provides cooling water to several safety related pumps, however AF pumps have their bearings cooled by the discharge of the pumps.
D. First part is plausible since AFN is preferred over AFA for all conditions EXCEPT a loss of offsite power. Second part is correct.

Question Source:		**Bank**	
		Modified Bank	
	x	**New**	
		Previous NRC Exam	

Question Cognitive Level:		**Memory or Fundamental Knowledge**
	x	**Comprehension or Analysis**
	3	**Level of Difficulty**

10 CFR Part 55 Content:	**41.4**

Reference Provided:	**None**

Learning Objective:	Explain the operation of AFA-P01 under normal operating conditions

Technical Reference: EOP Operations Expectations
3. The general priorities for restoration of feedwater to the steam generators are as follows: • Focus first on the systems and methods that are the least complex and most likely to be operational. Examples includes feed sources that are already in operation, such as using a MFP in manual or in reactor trip override mode, and the use of AFB after it has started post-SIAS actuation. • If an auxiliary feedwater pump must be started, then attempt to start AFN-P01, AFB-P01, or AFA-P01 (listed in order of preference except for LOOP events) from the Control Room. The operator must exercise caution when manually initiating feed or overriding AFAS actuated valves. Do not feed a steam generator with a DP lockout indicating a faulted steam generator. • If a LOOP has occurred and feedwater is available from AFB-P01 or AFA-P01, the use of AFN-P01should be delayed until the main feedwater piping has been slowly repressurized with the condensate pumps, or the feedwater piping has been allowed sufficient time to cool, to minimize the potential for a water hammer event.

Technical Reference: Auxiliary Feedwater Tech Manual

2.5 Essential Turbine Driven AFW Pump Turbine (AFA-P01)

AFA-P01 is almost identical to AFB-P01 in operating characteristics and design. The major differences between the two pumping units is:

- AFA-P01 is driven by a steam turbine (AFA-K01), as opposed to the electric motor that drives AFB-P01.
- AFA-P01 utilizes a pressurized oil system, with external oil cooler, for turbine bearing lubrication and governor control.

The steam turbine (AFA-K01) is described as a horizontal, single stage, non-condensing turbine. The term "non-condensing" means that the steam used to drive the turbine is exhausted directly to atmosphere as opposed to exhausting to a condensing unit. The turbine is commonly referred to as the "terry turbine" after the manufacturer, Terry Corp.

The turbine is equipped with its own lube oil system. The turbine shaft is coupled with a lube oil pump that supplies oil to the turbine bearings and to the turbine governor actuator. A minimum pump speed of 1000 rpm is required to provide adequate oil lubrication of the pumps sleeve bearings and pump internals. The AFW pump supplies its own cooling water to the lube oil cooler from the first stage of the pump.

Examination Outline Cross-reference:	Level	RO		SRO
	Tier #	1		
	Group #	1		
	K/A #	CE/E06 EK2.02		
	Importance Rating	3.5		
K/A: Loss of Feedwater: Knowledge of the interrelations between the Loss of Feedwater and the following: Facility's heat removal systems, including primary coolant, emergency coolant, the decay heat removal systems, and relations between the proper operation of these systems to the operations of the facility				

Question 12

Given the following conditions:

- Unit 3 tripped from 100% power
- On the trip, the following malfunctions occurred:
  - SBCS Master Controller Output failed to 0%
  - RRS Tave failed to 550°F
- SG pressures are fluctuating between ~ 1230 and 1250 psia
- Neither SG is being fed

The SGs are not being fed because ___(1)___ and the preferred method to restore Feedwater to the SGs is to ___(2)___ .

A. (1) indicated Tave is too low
(2) transition to an Auxiliary Feedwater source

B. (1) indicated Tave is too low
(2) restore Main Feedwater by taking manual control of Downcomer Regulating Valves

C. (1) SG pressures are too high
(2) transition to an Auxiliary Feedwater source

D. (1) SG pressures are too high
(2) restore Main Feedwater by taking manual control of Downcomer Regulating Valves

Answer: B

Explanation:

A. First part is correct. Second part is plausible as this is a viable option and would restore feed to the SGs, however per EOP Operations Expectations, the preferred option is to take manual control of the downcomer valves to restore feed using Main Feed Pumps.
B. Correct.
C. First part is plausible since normal post-trip SG pressure is 1170 psia and a higher pressure in the SGs could result in the MFPs not being able to send water to them, however the reason for no feed is the low Tave. Second part is plausible as this is a viable option and would restore feed to the SGs, however per EOP Operations Expectations, the preferred option is to take manual control of the downcomer valves to restore feed using Main Feed Pumps.
D. First part is plausible since normal post-trip SG pressure is 1170 psia and a higher pressure in the SGs could result in the MFPs not being able to send water to them, however the reason for no feed is the low Tave. Second part is correct.

Question Source:		**Bank**	
		Modified Bank	
	x	**New**	
		Previous NRC Exam	

Question Cognitive Level:		**Memory or Fundamental Knowledge**
	x	**Comprehension or Analysis**
	3	**Level of Difficulty**

10 CFR Part 55 Content:	**41.4**

Reference Provided:	**None**

Learning Objective:	Determine if feed can be established using the MFPs

Technical Reference: Feedwater Pump Turbine Tech Manual

Feedwater Pump Shutdown To Hot Standby

This procedure section places the Feedwater Pump on the turning gear in a standby condition.

Manual operation of a FWPT may require an operator dedicated to feed control until the turbine is tripped and/or SG levels are stable.

Differential pressure across the economizer valve should be maintained high enough to ensure feed flow, but below the high feedwater pump discharge pressure trip value, without causing economizer valve oscillations. This method of operation should maintain both of the following operating criteria:

- Sufficient differential pressure (ΔP) to feed the steam generators through normal transients.
- Avoiding excessive ΔP which causes excessive economizer valve oscillations.

There is no specific band or range of ΔP corresponding since the FWCS and mechanical components are different between units, and their operating characteristics change over time and with maintenance. The expected ΔP will range between 30 and 110 psid for operation between 15 and 100% power, and will increase as power is increased.

Technical Reference: Feedwater Control System Tech Manual

Tave (From RRS)	N/A	Tave failure Low	FWCS will not feed in RTO.(not an auto effect)
Tave (From RRS)	N/A	Tave failure high	FWCS will continuously feed in RTO.(not an auto effect)

Technical Reference: EOP Operations Expectations

PALO VERDE NUCLEAR GENERATING STATION EOP OPERATIONS EXPECTATIONS	Revision 27 Page 9 of 50

3. The general priorities for restoration of feedwater to the steam generators are as follows:
   - Focus first on the systems and methods that are the least complex and most likely to be operational. Examples includes feed sources that are already in operation, such as using a MFP in manual or in reactor trip override mode, and the use of AFB after it has started post-SIAS actuation.
   - If an auxiliary feedwater pump must be started, then attempt to start AFN-P01, AFB-P01, or AFA-P01 (listed in order of preference except for LOOP events) from the Control Room. The operator must exercise caution when manually initiating feed or overriding AFAS actuated valves. Do not feed a steam generator with a DP lockout indicating a faulted steam generator.
   - If a LOOP has occurred and feedwater is available from AFB-P01 or AFA-P01, the use of AFN-P01should be delayed until the main feedwater piping has been slowly repressurized with the condensate pumps, or the feedwater piping has been allowed sufficient time to cool, to minimize the potential for a water hammer event.

Examination Outline Cross-reference:	Level	RO		SRO
	Tier #	1		
	Group #	1		
	K/A #	055 EK3.02		
	Importance Rating	4.3		
K/A: Station Blackout: Knowledge of the reasons for the following responses as they apply to the Station Blackout: Actions contained in the EOP for loss of offsite and onsite power				

Question 13

Given the following conditions:

- Unit 1 is in a blackout condition
- Both Unit 1 EDGs are unavailable
- Off-site power is not expected to be available for 3 hours

Per 40EP-9EO08, Blackout, an SBOG must be aligned to a vital 4.16 kV bus within a MAXIMUM of ___(1)___ in order to ensure sufficient power is available to coping loads to support the blackout coping time of ___(2)___ .

A. (1) 1 hour
(2) 4 hours

B. (1) 1 hour
(2) 16 hours

C. (1) 2 hours
(2) 4 hours

D. (1) 2 hours
(2) 16 hours

Answer: B

Explanation:

A. First part is correct. Second part is plausible since 4 hours was the PV coping time prior to the 3-unit trip due to a loss of offsite power in 2004, however it is now 16 hours. Additionally, if a blackout is expected to last > 4 hours, a General Emergency is declared so correlating the GE criteria with site coping time is plausible.
B. Correct.
C. First part is plausible since 2 hours is the rated time for the class batteries, however the procedural guidance is to align an SBOG within 1 hour. Second part is plausible since 4 hours was the PV coping time prior to the 3-unit trip due to a loss of offsite power in 2004, however it is now 16 hours. Additionally, if a blackout is expected to last > 4 hours, a General Emergency is declared so correlating the GE criteria with site coping time is plausible.
D. First part is plausible since 2 hours is the rated time for the class batteries, however the procedural guidance is to align an SBOG within 1 hour. Second part is correct.

Question Source:		**Bank**	
		Modified Bank	
	x	**New**	
		Previous NRC Exam	

Question Cognitive Level:	**x**	**Memory or Fundamental Knowledge**
		Comprehension or Analysis
	3	**Level of Difficulty**

10 CFR Part 55 Content:	**41.10**

Reference Provided:	**None**

Learning Objective:	Describe the major mitigating strategies for a blackout

Technical Reference: LOIT Blackout Lesson Plan

Introduction

Station Blackout Generators have been installed to allow a unit to successfully cope with a blackout for a period of 16 hours.

Main Idea

The general approach to coping with a Blackout is to maintain heat removal from the core by natural circulation. The Alternate AC (AAC) power source (SBOG) will be used to energize PBA-S03 within one hour of a Blackout.

- The energization of the A Train vital 4.16 kV AC bus ensures that vital DC power, supplied by class battery chargers, will be available to operate the steam driven Auxiliary Feedwater Pump and the A Train ADVs.
- Required loads, including Class MCCs, Charging Pump, PZR heaters, SP, EW, EC, CR Ess AFU, and a Switchgear Room Ess AFU, energized. Other loads essential to coping with a Blackout will also be energized by the SBOG(s).
- Contingency actions provide guidance for aligning another unit's diesel generator to the affected units 4.16 vital bus. This contingency should be used when power will not be restored to at least one 4.16 vital bus within one hour from offsite or the affected unit's diesel generator and no SBOGs are available.

Technical Reference: 40EP-9EO08, Blackout

---------- **NOTE** ----------

In order to be successful in energizing a vital bus from a SBOG within one hour of the start of the event, Appendix 80, Align SBOG to PBA-S03 (BO), Attachment 80-A, Disable PBA-S03 Breakers, (or Appendix 81, Align SBOG to PBB-S04 (BO), Attachment 81-A, Disable PBB-S04 Breakers,) must be started as soon as possible, and performed concurrently with Standard Appendix 53.

Examination Outline Cross-reference:	Level	RO		SRO
	Tier #	1		
	Group #	1		
	K/A #	056 AA2.68		
	Importance Rating	2.7		
K/A: Loss of Off-Site Power: Ability to determine and interpret the following as they apply to the Loss of Offsite Power: CVCS letdown flow				

Question 14

Given the following condition:

- Unit 1 tripped from 100% power due to a loss of off-site power

Two minutes after the loss of off-site power, with NO operator action, letdown flow will be ___(1)___ and charging flow will be ___(2)___ .

A. (1) 0 gpm
(2) 44 gpm

B. (1) 0 gpm
(2) 132 gpm

C. (1) 30 gpm
(2) 44 gpm

D. (1) 30 gpm
(2) 132 gpm

Answer: A

Explanation:

A. Correct. Letdown will isolate on the loss of off-site power. The “always running” charging pump will be anti-pumped but the normally running charging pump will restart ~ 10 seconds after the trip when the EDGs re-energize the class buses.
B. First part is correct. Second part is plausible since the Charging Pumps are class powered, and a loss of offsite power will temporarily result in an indicated Pressurizer level of 0% on (which would result in all 3 charging pumps running), however on the re-energization of the class bus, only one Charging Pump automatically restarts.
C. First part is plausible 30 gpm is the low end for letdown flow in automatic, and the Pressurizer will shrink on the trip from 100% power, however the loss of charging flow while the EDG is starting up and loading on the bus will result in letdown flow isolating on high temperature. Second part is correct.
D. First part is plausible 30 gpm is the low end for letdown flow in automatic, and the Pressurizer will shrink on the trip from 100% power, however the loss of charging flow while the EDG is starting up and loading on the bus will result in letdown flow isolating on high temperature. Second part is plausible since the Charging Pumps are class powered, and a loss of offsite power will temporarily result in an indicated Pressurizer level of 0% (which would result in all 3 charging pumps running), however on the re-energization of the class bus, only one Charging Pump automatically restarts.

Question Source:		**Bank**	
		Modified Bank	
	x	**New**	
		Previous NRC Exam	

Question Cognitive Level:		**Memory or Fundamental Knowledge**
	x	**Comprehension or Analysis**
	2	**Level of Difficulty**

10 CFR Part 55 Content:	**41.7**

Reference Provided:	**None**

Learning Objective:	Describe the automatic functions associated with the Charging Pumps Describe the automatic functions associated with the Letdown Isolation Valves

Technical Reference: LOIT Loss of Offsite Power Lesson Plan

Introduction

The "always running" charging pump will stop on a loss of offsite power. This objective requires that the trainee understand how the pump is restarted following a LOP.

Main Idea

Following a loss of offsite power, with no SIAS or CIAS actuations present, the "always running" Charging Pump will be in an anti-pump condition and will have to be manually restarted when power is restored to the class bus. Depending on the pressurizer level, the "normally running" Charging Pump may be running but will stop when the pressurizer level deviation setpoint is reached.

Technical Reference: 40AO-9ZZ05, Loss of Charging or Letdown – The loss of offsite power will result in a loss of NC flow since the NC Pumps are both non-class pumps.

2.0 Loss of Nuclear Cooling flow from the Letdown Heat Exchanger:

- CHB-UV-523, Regenerative Heat Exchanger Outlet Isolation Valve, will close when Letdown Heat Exchanger to Letdown Back Pressure Valve Temperature is 135°F or more, as sensed by CHN-TS-224-2.
- Low NC flow may result in closure of the Backpressure Control Valves due to temperature exceeding 148°F on the Letdown Heat Exchanger outlet as sensed by CHN-TT-224.

Examination Outline Cross-reference:	Level	RO		SRO
	Tier #	1		
	Group #	1		
	K/A #	057 AA2.16		
	Importance Rating	3.0		
K/A: Loss of Vital AC Instrument Bus: Ability to determine and interpret the following as they apply to the Loss of Vital AC Instrument Bus: Normal and abnormal PZR level for various modes of plant operation				

Question 15

Given the following conditions:

- Unit 1 is operating at 50% power
- RCN-LIC-110, Level Setpoint Control, is in REMOTE/AUTO
- RCN-HS-110, Level Control Selector Switch, is selected to Channel X

Subsequently:

- 120 VAC Class Instrument Bus PNA-D25 de-energized due to an electrical fault

With NO operator action, Pressurizer level SETPOINT will ___(1)___ and actual Pressurizer level will ___(2)___ .

A. (1) lower to 33%
(2) rise

B. (1) lower to 33%
(2) lower

C. (1) remain at ~ 42%
(2) rise

D. (1) remain at ~ 42%
(2) lower

Answer: C

Explanation:

A. First part is plausible since the setpoint is controlled by Tave and the Tave instruments are powered from 120 VAC instrument bus power, however those are non-class instruments so they are unaffected. Second part is correct.
B. First part is plausible since the setpoint is controlled by Tave and the Tave instruments are powered from 120 VAC instrument bus power, however those are non-class instruments so they are unaffected. Second part is plausible since the pressurizer level master controller is powered by 120 VAC instrument bus power, and on a loss of power to the controller, two charging pumps would stop causing pressurizer level to lower, however it is powered by non-class instrument power so a loss of PNA-D25 has no impact to the master controller.
C. Correct. Setpoint is unaffected due to the inputs for the setpoint being non-class power. Pressurizer level will rise since the level controller is selected to channel X (which fails to 0% on the loss of PNA-D25), causing the system to start all charging pumps and reduce letdown flow in order to raise pressurizer level back to the setpoint of ~ 42%.
D. First part is correct. Second part is plausible since the pressurizer level master controller is powered by 120 VAC instrument bus power, and on a loss of power to the controller, two charging pumps would stop causing pressurizer level to lower, however it is powered by non-class instrument power so a loss of PNA-D25 has no impact to the master controller.

Question Source:		**Bank**	
		Modified Bank	
	x	**New**	
		Previous NRC Exam	

Question Cognitive Level:		**Memory or Fundamental Knowledge**
	X	**Comprehension or Analysis**
	4	**Level of Difficulty**

10 CFR Part 55 Content:	**41.5**

Reference Provided:	**None**

Learning Objective:	Describe the interrelationship between the PLCS and Class 1E instrumentation

Technical Reference: PLCS Tech Manual

1.4 System Interfaces

- Reactor regulating system (RRS)

The RRS provides a RCS average temperature signal to the function generator (T_{ave} program). A selector switch within RRS allows the input into PLCS T_{ave} program to be either loop 1 T_{ave}, loop 2 T_{ave} or the averages of both loop T_{ave} signals. Failure of this input to the PLCS can cause the PLCS to react to change pressurizer level by operating the letdown control valves and charging pumps when actual plant conditions do not require any changes.

The PLCS transmits a signal to the RRS to indicate whether the PLCS is in manual, local-automatic, or remote-automatic operation. This is important so that when the RRS is put in test, the operator can know if it is going to cause the PLCS to react as test signals in the RRS are carried. In "Local Auto", the PLCS will not react to test signal variations in the RRS. In "Remote Manual", the PLCS will not react to change LD control valve position but it will react to start or stop charging pumps as RRS test signals are varied. In "Remote-Auto", varying RRS test signals will cause the PLCS to react by operating both the LD control valves and charging pumps based on the test signal.

- Class 1E instrument AC power system

Pressurizer level transmitters and indicators receive power from 120 VAC class 1E PN distribution panels.

- Non-class 1E instrument AC power system

Level setpoint control and level control channels receive power from 120 VAC and 125 VDC non-class 1E NN and NK distribution panels.

Examination Outline Cross-reference:	Level	RO		SRO
	Tier #	1		
	Group #	1		
	K/A #	062 AK3.01		
	Importance Rating	3.2		
K/A: Loss of Nuclear Service Water: Knowledge of the reasons for the following responses as they apply to the Loss of Nuclear Service Water: The conditions that will initiate the automatic opening and closing of the SWS isolation valves to the nuclear service water coolers				

Question 16

Given the following conditions:

- Unit 2 is operating at 100% power
- A leak in the Nuclear Cooling Water System has resulted in a complete loss of NC
- Train 'A' Essential Cooling Water has been cross-connected to NC per 40AO-9ZZ03, Loss of Cooling Water

(1) Which of the following ESFAS signals will automatically close EWA-UV-65 and EWA-UV-145, Cross-Tie Valves to/from Nuclear Cooling Water?

(2) What is the purpose of the auto close feature of these valves?

A. (1) SIAS
(2) To isolate Containment during accident conditions

B. (1) SIAS
(2) To ensure adequate cooling flow to the SDCHX during accident conditions

C. (1) CSAS
(2) To isolate Containment during accident conditions

D. (1) CSAS
(2) To ensure adequate cooling flow to the SDCHX during accident conditions

Answer: B

Explanation:

A. First part is correct. Second part is plausible since the NC system is divorced from the EW system on a SIAS, however containment isolation is maintained by either the CIAS or CSAS signals.
B. Correct.
C. First part is plausible since CSAS does isolate NC valves to containment, however SIAS closes the EW-NC cross-tie valves. Second part is plausible since the NC system is divorced from the EW system on a SIAS, however containment isolation is maintained by either the CIAS or CSAS signals.
D. First part is plausible since CSAS does isolate NC valves to containment, however SIAS closes the EW-NC cross-tie valves. Second part is correct.

Question Source:	**x**	**Bank**	
		Modified Bank	
		New	
	x	**Previous NRC Exam**	2016 RO Exam

Question Cognitive Level:	**x**	**Memory or Fundamental Knowledge**
		Comprehension or Analysis
	3	**Level of Difficulty**

10 CFR Part 55 Content:	**41.7**

Reference Provided:	**None**

Learning Objective:	Describe the automatic features associated with the NC/EW Crosstie Isolation Valves

Technical Reference: 40AO-9ZZ03, Loss of Cooling Water

EWA-UV-65 and EWA-UV-145 close on a SIAS

Appendix A, Cross-connect EW to NC

INSTRUCTIONS | CONTINGENCY ACTIONS

___ 1. Enter Appendix Entry Time and Date:

_____

---------- **NOTE** ----------

Cross-connecting EW and NC renders the EW Train inoperable per LCO 3.7.7, Essential Cooling Water (EW) System. Refer to 40ST-9EC03 and 40DP-9OP37 for impacts on supported system operability.

---------- **NOTE** ----------

The cross-connect of Essential Cooling Water Train A with Nuclear Cooling Water will be lost on a SIAS or Essential Cooling Water surge tank A low level.

Technical Reference: 40AO-9ZZ17, Inadvertent PPS-ESFAS Actuations

Appendix C, PPS-ESFAS Check

Attachment C-13, SIAS Train A — **Page 2 of 4**

Actuation Leg		Component	Handswitch	Actuated Condition	In Actuated Condition (Circle one)	As Left Condition (Circle one)
1-3		Cross-Tie Valve from NCW	EWA-HS-65	Closed	Y / N	Open / Closed
1-3		Cross-Tie Valve to NCW	EWA-HS-145	Closed	Y / N	Open / Closed

Technical Reference: 40AO-9ZZ17, Inadvertent PPS-ESFAS Actuations

Appendix C, PPS-ESFAS Check

Attachment C-7, CSAS Train A **Page 1 of 1**

Actuation Leg		Component	Handswitch	Actuated Condition	In Actuated Condition (Circle one)	As Left Condition (Circle one)
1-3		NCW Containment Downstream Return Isolation Valve	NCA-HS-402	Closed	Y / N	Open / Closed

Technical Reference: 40AO-9ZZ03, Loss of Cooling Water

Since cross connecting diverts flow from the SDCHX to the RCPs, Closing the Cross-connect valves ensures adequate flow to the SDCHX.

___ 9. **IF** cross-connecting Train A EW to NC,
THEN direct an operator to unlock and throttle EWA-HCV-53, SDCHX A OUTLET ISOLATION, until **ONE** of the following conditions exists:

- All of the RCP low NC flow alarms are clear.
- EW system flow lowers to 8500 gpm on EWN-FI-13.

throttled closed on SDCHX flow to feed the RCPs

Examination Outline Cross-reference:	Level	RO		SRO
	Tier #	1		
	Group #	1		
	K/A #	065 G 2.2.37		
	Importance Rating	3.6		
K/A: Loss of Instrument Air: Ability to determine operability and/or availability of safety related equipment				

Question 17

Given the following conditions:

- Unit 2 tripped from 100% power due to a seismic event
- ADVs are being used to maintain SG pressures in the normal post-trip bands

Subsequently:

- A break in the Instrument Air system has resulted in a complete loss of Instrument Air to the MSSS Building

(1) Due to the loss of Instrument Air, ADVs will…

(2) When backup nitrogen is aligned, the ADVs can be operated for a MINIMUM of…

A. (1) drift closed until backup nitrogen is manually aligned to the ADVs
(2) 2 hours

B. (1) drift closed until backup nitrogen is manually aligned to the ADVs
(2) 13.3 hours

C. (1) remain open due to backup nitrogen automatically aligning to the ADVs
(2) 2 hours

D. (1) remain open due to backup nitrogen automatically aligning to the ADVs
(2) 13.3 hours

Answer: D

Explanation:

A. First part is plausible since the ADVs do fail closed on a loss of IA, and this would be the correct failure method if nitrogen had to be manually aligned, however nitrogen is automatically aligned keeping the ADVs in their current position on a loss of IA. Second part is plausible since 2 hours is the amount of time the ADVs would remain operational following a loss of DC power, however on a loss of IA they remain operational for 13.3 hours.
B. First part is plausible since the ADVs do fail closed on a loss of IA, and this would be the correct failure method if nitrogen had to be manually aligned, however nitrogen is automatically aligned keeping the ADVs in their current position on a loss of IA. Second part is correct.
C. First part is correct. Second part is plausible since 2 hours is the amount of time the ADVs would remain operational following a loss of DC power, however on a loss of IA they remain operational for 13.3 hours.
D. Correct.

Question Source:	**x**	**Bank**	
		Modified Bank	
		New	
	x	**Previous NRC Exam**	2016 RO Exam

Question Cognitive Level:	**x**	**Memory or Fundamental Knowledge**
		Comprehension or Analysis
	3	**Level of Difficulty**

10 CFR Part 55 Content:	**41.7**

Reference Provided:	**None**

Learning Objective:	Determine the major effects on plant operation as instrument air pressure degrades

Technical Reference: 40AO-9ZZ06, Loss of Instrument Air

Appendix A, Expected Component Failure as System Pressure Drops

PRESS	COMPONENT	ACTION
75 - 65 psig		
SG	SGA-HV-179 / 184 & SGB-HV-178 / 185, ADVs (FC)	**NOTE** The 615 psig N2 accumulator will allow 13.3 hours of operation

Technical Reference: 125 VDC Class Power Lesson Plan

EO: 1.1 Discuss the purpose and conditions under which the 125 VDC Class IE Power System is designed to function.

Introduction

This objective requires knowledge of WHY the system is installed and WHAT it is required to do.

Main Idea

Purpose and Capabilities

The Class IE 125 Vdc distribution system consists of four independent subsystems which provide a reliable source of 125 Vdc power to four independent groups of Class IE DC loads. On loss of station AC power, the system will provide at least two hours of 125 Vdc power to its connected loads.

Technical Reference: Instrument Air Lesson Plan

Main Idea

Purpose and Capabilities

The Instrument Air System (IA) provides a continuous supply of compressed, oil-free, filtered, dry air for operation of pneumatic instrumentation, controllers, and actuators.

The IA System is designed to operate at all times, but is not a safety-related system, and has no safety design bases. An IA System failure has no effect on the capability of air operated valves provided in ESF systems to perform a safe reactor shutdown. The minimum operating pressure required to ensure satisfactory operation of all equipment, with exception of the ADVs, MSIVs, and FWIVs, is ~95 psig. The ADVs, MSIVs and FWIVs have their own safety related accumulators that do not rely on the IA system.

Class Q Spent Fuel Pool gate seals (Cask Loading Pit and Decon Washdown Area) are provided with a redundant, class Q, seismic category 1 backup air bottle system to maintain functions. All other air operated devices and valves are designed for fail-safe operation upon loss of instrument air and do not require a continuous supply under emergency or abnormal conditions.

The normal instrument air operating system pressure is from 109 psig to 119 psig. The Instrument Air system, with back-up from the low pressure GA (Service Gas) header, provides compressed gas (air and /or nitrogen) to pneumatic devices during transient plant conditions resulting from LOP, SIAS, AFAS, MSIS and CREFAS.

Examination Outline Cross-reference:	Level	RO		SRO
	Tier #	1		
	Group #	1		
	K/A #	077 AK2.06		
	Importance Rating	3.9		
K/A: Generator Voltage and Electric Grid Disturbances: Knowledge of the interrelations between Generator Voltage and Electric Grid Disturbances and the following: Reactor Power				

Question 18

Given the following conditions:

- Unit 1 is operating at 100% power

Subsequently:

- Grid instabilities have resulted in lowering grid frequency

If grid frequency continues to lower, the crew should anticipate an automatic Reactor trip due to…

A. Low DNBR

B. Low SG Level

C. Low SG Pressure

D. Low Pressurizer Pressure

Answer: A

Explanation:

A. Correct. The lowering grid frequency will result in RCPs slowing down, which will lower the margin to DNBR, resulting in a Reactor Trip.
B. Plausible since grid frequency lowering will result in the Main Turbine taking on more load, which will draw more steam, and could cause the MFPs to be unable to keep up with demand.
C. Plausible since the Main Turbine will take on more load, and increasing turbine load will lower SG pressure, however the Reactor will trip on low DNBR first.
D. Plausible since the Main Turbine will take on more load, and increasing turbine load will lower PZR pressure, however the Reactor will trip on low DNBR first.

Question Source:		**Bank**	
		Modified Bank	
	x	**New**	
		Previous NRC Exam	

Question Cognitive Level:		**Memory or Fundamental Knowledge**
	x	**Comprehension or Analysis**
	3	**Level of Difficulty**

10 CFR Part 55 Content:	**41.5**

Reference Provided:	**None**

Learning Objective:	Describe the function of the RCP speed inputs to the Core Protection Calculators

Technical Reference: Core Protection Calculator Tech Manual

- Reactor coolant (RC)

The RC system provides the following inputs to the core protection calculators, which are used in computing DNBR Low and LPD High trip signals:

a. Pressurizer pressure

b. Hot leg temperature

c. Cold leg temperature

d. Reactor coolant pump speed

Technical Reference: Core Protection Calculator / CEAC Lesson Plan

1. **The Coolant Mass Flow Program (FLOW)**

   Computes a normalized flow rate in each leg of the primary coolant system and in the reactor core, and to compute an adjusted value of DNBR based on the number of reactor coolant pumps running.

   This calculation is performed every 50 milliseconds. The program will reduce the calculated DNBR to less than 1.34 whenever fewer than four reactor coolant pumps are operating at greater than or equal to 95% of rated speed. This decreased calculated DNBR is polled by the TRIPSEQ program every 50 milliseconds and will create a Low DNBR trip.

   The limiting Anticipated Operational Occurrence (AOO) is a four pump loss-of-flow event. Tripping the reactor when reactor coolant pump operation decreases to less than four pumps operating at greater than 95% speed will guarantee no fuel damage due to the Loss-of-Flow event.

Technical Reference: Reactor Coolant System Tech Manual

Motor

The reactor coolant pump motor is a vertical, six pole, air cooled, squirrel cage induction type as shown in figure 2-34. It is designed to operate on a three phase, 60Hz, 13.8 kV power supply.

Technical Reference: Motors and Controllers Lesson Plan

Since the speed of the RCP is controlled by the speed of the magnetic field (directly proportional to the supplied electrical frequency), a lowering frequency will result in a lower RCP Pump speed.

EO 1.1.2	**Explain the basic principle by which an AC Induction Motor works. Your explanation should include a basic description of the Squirrel Cage rotor.**

1.1.2.1 Introduction

The function of an AC motor is to take an AC electrical input and convert it to mechanical work.

Some AC motors are designed to work with 1Φ while others are designed to work with 3Φ.

Two classes of 3Φ motors are:

Induction - Very rugged and somewhat simplistic in design compared to other motors. Used extensively at Palo Verde.

Synchronous - Can be designed to develop very large horsepowers. Also used by utility companies to control grid power factor. This type of motor is not used at Palo Verde.

Both have in common a rotating magnetic field produced by the 3Φ AC power applied to the stator of the motor. In the case of the synchronous motor, the rotor rotates at the same angular speed as that of the rotating field. In the case of the induction motor, the rotor rotates at a slower speed than that of the rotating field.

Examination Outline Cross-reference:	Level	RO		SRO
	Tier #	1		
	Group #	2		
	K/A #	001 AK3.02		
	Importance Rating	3.2		
K/A: Continuous Rod Withdrawal: Knowledge of the reasons for the following responses as they apply to the Continuous Rod Withdrawal: Tech-Spec limits on rod operability				

Question 19

Given the following conditions:

- Unit 3 is operating at 80% power
- Part Strength CEAs have been inserted to 132” withdrawn for ASI control

Subsequently:

- Part Strength CEA 32 began withdrawing with no operator action
- The RO placed the Mode Select Switch in STANDBY
- CEA 32 stopped at 139.5” withdrawn
- All other Part Strength CEAs remained at 132” withdrawn

In order to comply with Technical Specifications, the crew must ___(1)___ and this action must be completed within a MAXIMUM of ___(2)___ .

A. (1) commence a boration to restore SDM
(2) 15 minutes

B. (1) commence a boration to restore SDM
(2) one hour

C. (1) reduce power to within the limits of the COLR
(2) 15 minutes

D. (1) reduce power to within the limits of the COLR
(2) one hour

Answer: D

Explanation:

A. First part is plausible since the CEA deviated in the outward direction it could be assumed that the positive reactivity inserted would result in a loss of SDM, and therefore need to be mitigated via a boration per LCO 3.1.2, Shutdown Margin – Reactor Trip Breakers Closed, however the mode of applicability for LCO 3.1.2 is not met at 100% power. Second part is plausible since 15 minutes is the completion time for a boration during a loss of SDM, however in this case, the completion time is one hour.
B. First part is plausible since the CEA deviated in the outward direction it could be assumed that the positive reactivity inserted would result in a loss of SDM, and therefore need to be mitigated via a boration per LCO 3.1.2, Shutdown Margin – Reactor Trip Breakers Closed, however the mode of applicability for LCO 3.1.2 is not met at 100% power. Second part is correct.
C. First part is correct. Second part is plausible since the completion time for a boration due to a loss of SDM is 15 minutes, and 15 minutes is also the completion time for a load reduction when directed by the ECC, however a power reduction due to a misaligned CEA must be completed within a maximum of one hour.
D. Correct.

Question Source:		**Bank**	
		Modified Bank	
	x	**New**	
		Previous NRC Exam	

Question Cognitive Level:		**Memory or Fundamental Knowledge**
	x	**Comprehension or Analysis**
	3	**Level of Difficulty**

10 CFR Part 55 Content:	**41.1**

Reference Provided:	**None**

Learning Objective:	Apply the one hour or less action statements of TS 3.1

Technical Reference: Technical Specifications

3.1 REACTIVITY CONTROL SYSTEMS

3.1.5 Control Element Assembly (CEA) Alignment

LCO 3.1.5 All full strength CEAs shall be OPERABLE, and all full strength and part strength CEAs shall be aligned to within 6.6 inches (indicated position) of all other CEAs in their respective groups.

APPLICABILITY: MODES 1 and 2.

ACTIONS

CONDITION	REQUIRED ACTION	COMPLETION TIME
A. One or more CEAs trippable and misaligned from its group by > 6.6 inches and ≤ 9.9 inches. OR One CEA trippable and misaligned from its group by > 9.9 inches.	A.1 Reduce THERMAL POWER in accordance with the limits in the COLR. AND A.2 Restore CEA alignment.	1 hour 2 hours

(continued)

Technical Reference: Technical Speicifications

3.1 REACTIVITY CONTROL SYSTEMS

3.1.2 SHUTDOWN MARGIN (SDM) - Reactor Trip Breakers Closed

LCO 3.1.2 Reactivity shall be controlled by:

a. SDM shall be ≥ the value in the COLR.

b. K_{N-1} shall be < 0.99 when $T_c \leq 500°F$.

c. Reactor criticality shall not be achieved with shutdown group CEA movement.

APPLICABILITY: MODES 3, 4, and 5 with the Reactor Trip Breakers Closed and the CEA drive system capable of CEA withdrawal.

ACTIONS

CONDITION	REQUIRED ACTION	COMPLETION TIME
A. SDM not within limit.	A.1 Initiate boration to restore SDM to within limit.	15 minutes

Technical Reference: 40AO-9ZZ25, ECC Directed Turbine Unloading

PALO VERDE NUCLEAR GENERATING STATION ECC DIRECTED TURBINE UNLOADING	40AO-9ZZ25 Revision 12 Page 1 of 50

This procedure provides guidance for **ALL** of the following condition(s): [Ref: Step 5]

- ECC has requested that Palo Verde shed up to 600 MW of load to support closing Arizona / California Transmission System breakers after a grid disturbance. The units performing this procedure shall reach a lower steady state value within 15 minutes of notification
- ECC has requested that Palo Verde shed up to 600 MW of load to aid in restoration of grid stability. The units performing this procedure shall reach a lower steady state value within 15 minutes of notification

Examination Outline Cross-reference:	Level	RO		SRO
	Tier #	1		
	Group #	2		
	K/A #	003 AA1.05		
	Importance Rating	4.1		
K/A: Dropped Control Rod: Ability to operate and/or monitor the following as they apply to the Dropped Control Rod: Reactor power - turbine power				

Question 20

Given the following conditions:

- Unit 1 was operating at 100% power when four-finger full-strength CEA 66 dropped to the bottom of the core
- Power stabilized at 96% following the CEA drop

Per 40AO-9ZZ11, CEA Malfunctions, the crew must lower power to a final MAXIMUM power level of ___(1)___ in the first hour, and will maintain Tave approximately ___(2)___ Tref during the turbine load reduction.

A. (1) 76%
(2) equal to

B. (1) 76%
(2) 3°F above

C. (1) 80%
(2) equal to

D. (1) 80%
(2) 3°F above

Answer: D

Explanation:

A. First part is plausible since a 20% power reduction is required in the first hour, and 76% is 20% below the power level prior to commencing the power reduction, however the required power reduction is 20% below the pre-drop power level. Second part is plausible since this would keep Tcold on the program band, however during a power reduction Tave is rasied to 3°F above Tref.
B. First part is plausible since a 20% power reduction is required in the first hour, and 76% is 20% below the power level prior to commencing the power reduction, however the required power reduction is 20% below the pre-drop power level. Second part is correct.
C. First part is correct. Second part is plausible since this would keep Tcold on the program band, however during a power reduction Tave is rasied to 3°F above Tref.
D. Correct.

Question Source:		**Bank**	
		Modified Bank	
	x	**New**	
		Previous NRC Exam	

Question Cognitive Level:		**Memory or Fundamental Knowledge**
	x	**Comprehension or Analysis**
	3	**Level of Difficulty**

10 CFR Part 55 Content:	**41.10**

Reference Provided:	**None**

Learning Objective:	Determine how the plant is stabilized to counter the effect of the dropped/slipped CEA

Technical Reference: 40AO-9ZZ11, CEA Malfunctions
____ 14. Determine the required power reduction based on initial power from **ONE** of the following: • Greater than 80% - requires a 20% power reduction • Greater than 70% to 80% - requires a 15% power reduction • Greater than 45% to 70% - requires a 10% power reduction • Greater than 35% to 45% - requires a 5% power reduction Required reduction = _____%

Technical Reference: 40AO-9ZZ11, CEA Malfunctions
____ 18. Adjust turbine load to maintain Tave 3°F (+0.5°F/-0.0°F) greater than Tref.

Examination Outline Cross-reference:	Level	RO		SRO
	Tier #	1		
	Group #	2		
	K/A #	028 AK2.03		
	Importance Rating	2.6		
K/A: Pressurizer Level Malfunction: Knowledge of the interrelations between the Pressurizer Level Control Malfunctions and the following: Controllers and positioners				

Question 21

Given the following conditions:

- Unit 3 is operating at 12% power.
- RCN-LIC-110, Level Setpoint Control, is in REMOTE/AUTO.
- The Charging Pump Selector Switch is in the 1-2-3 position.

Subsequently:

- A fault in the Pressurizer Level Controller fails the SETPOINT to 50%.

Which of the following describes the immediate response to the controller failure?

The ‘E’ Charging Pump, CHE-P01, ___(1)___ receive a start signal and the Pressurizer Backup Heaters ___(2)___ turn on.

A. (1) SHOULD
(2) SHOULD

B. (1) SHOULD
(2) should NOT

C. (1) should NOT
(2) SHOULD

D. (1) should NOT
(2) should NOT

Answer: D

Explanation:

A. First part is plausible since the pressurizer is now 17% below setpoint (setpoint at 12% power is 33%), and the “standby” charging pump gets a stop signal at 14% below setpoint, but the start setpoint for the standby charging pump is 23% below setpoint. Second part is plausible since the heaters energize on a level deviation of > 3%, however that deviation must be level > setpoint, not the other way around.
B. First part is plausible since the pressurizer is now 17% below setpoint (setpoint at 12% power is 33%), and the “standby” charging pump gets a stop signal at 14% below setpoint, but the start setpoint for the standby charging pump is 23% below setpoint. Second part is correct.
C. First part is correct. Second part is plausible since the heaters energize on a level deviation of > 3%, however that deviation must be level > setpoint, not the other way around.
D. Correct.

Question Source:		**Bank**	
		Modified Bank	
	x	**New**	
		Previous NRC Exam	

Question Cognitive Level:		**Memory or Fundamental Knowledge**
	x	**Comprehension or Analysis**
	3	**Level of Difficulty**

10 CFR Part 55 Content:	**41.3**

Reference Provided:	**None**

Learning Objective:	Describe the automatic features associated with the PLCS bistables

Technical Reference: PVNGS Operator Information Manual

Setpoint at 12% power is 33%, therefore when the setpoint fails to 50%, there is a -17% deviation, not enough to start the standby Charging Pump (-23% deviation is required to start the standby pump)

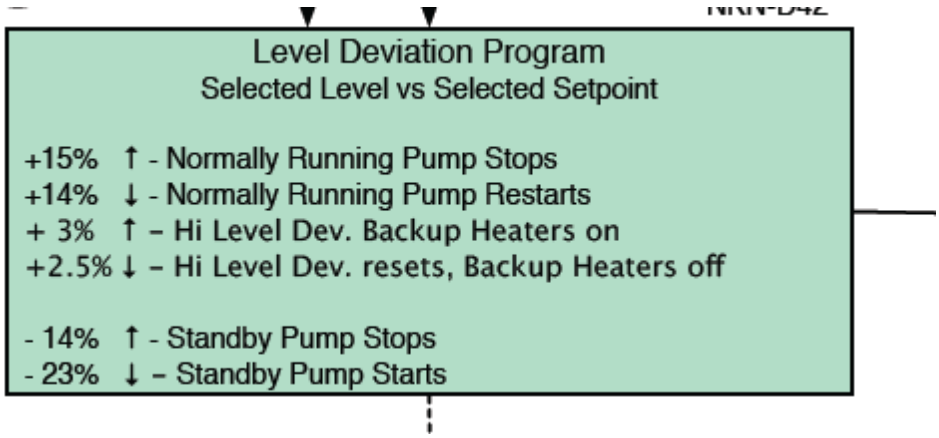

Technical Reference: PVNGS Operator Information Manual

Backup heaters turn on when level is > 3% above setpoint, but in this case level is less than setpoint so the heaters will not come on

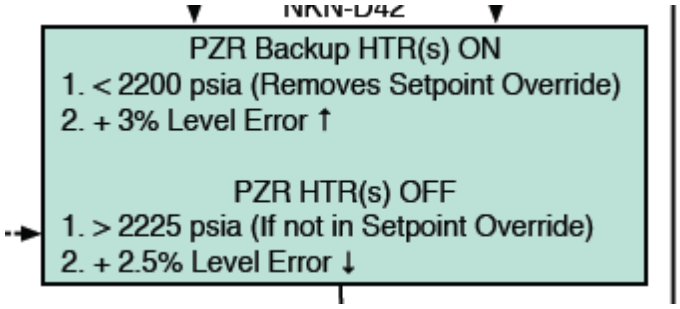

Examination Outline Cross-reference:	Level	RO		SRO
	Tier #	1		
	Group #	2		
	K/A #	036 AK1.01		
	Importance Rating	3.5		
K/A: Fuel Handling Incidents: Knowledge of the operational implications of the following concepts as they apply to Fuel Handling Incidents: Radiation exposure hazards				

Question 22

Given the following conditions:

- Unit 1 is in MODE 6
- Core off-load is in progress

Subsequently:

- The Refueling SRO informs the Control Room that a Fuel Assembly has been dropped in the Refueling Pool
- The RO reports that Power Access Purge Radiation Monitors, RU-37 and RU-38, are slowly trending up

Per 40AO-9ZZ22, Fuel Damage, the crew should ensure ___(1)___ and ___(2)___ are initiated.

A. (1) CPIAS
(2) CREFAS

B. (1) CPIAS
(2) CRVIAS

C. (1) FBEVAS
(2) CREFAS

D. (1) FBEVAS
(2) CRVIAS

Answer: A

Explanation:

A. Correct.
B. First part is correct. Second part is plausible since ventilation to the control room is changed in response to this event, however CR ventilation is shifted to essential mode using a CREFAS, not isolated using a CRVIAS.
C. First part is plausible since the fuel building is connected to the refueling pool during core off-load, and FBEVAS would be correct if the assembly was dropped in the SFP, however since the assembly was dropped in Refueling Pool, CPIAS is actuated instead of FBEVAS. Second part is correct.
D. First part is plausible since the fuel building is connected to the refueling pool during core off-load, and FBEVAS would be correct if the assembly was dropped in the SFP, however since the assembly was dropped in Refueling Pool, CPIAS is actuated instead of FBEVAS. Second part is plausible since ventilation to the control room is changed in response to this event, however CR ventilation is shifted to essential mode using a CREFAS, not isolated using a CRVIAS.

Question Source:	**x**	**Bank**	
		Modified Bank	
		New	
	X	**Previous NRC Exam**	2008 RO Exam

Question Cognitive Level:	**x**	**Memory or Fundamental Knowledge**
		Comprehension or Analysis
	2	**Level of Difficulty**

10 CFR Part 55 Content:	**41.9**

Reference Provided:	**None**

Learning Objective:	Describe the major steps necessary to mitigate a damaged irradiated fuel assembly

Technical Reference: 40AO-9ZZ22, Fuel Damage
____ 4. **IF** the damaged fuel is located in the Containment Bldg, **THEN** perform the following: a. Ensure **BOTH** of the following BOP-ESFAS actuations: • CPIAS • CREFAS

Technical Reference: 40AO-9ZZ22, Fuel Damage
____ 5. **IF** the damaged fuel is located in the Fuel Building, **THEN** perform the following: a. Ensure **BOTH** of the following BOP-ESFAS actuations: • FBEVAS • CREFAS

Examination Outline Cross-reference:	Level	RO		SRO
	Tier #	1		
	Group #	2		
	K/A #	037 AK1.02		
	Importance Rating	3.5		
K/A: Steam Generator Tube Leak: Knowledge of the operational implications of the following concepts as they apply to Steam Generator Tube Leak: Leak rate vs. pressure drop				

Question 23

Per 40DP-9AP09, SG Tube Rupture Technical Guidelines, after the most affected SG has been isolated during a SGTR…

(1) Why is the isolated SG pressure maintained less than 1135 psig?

(2) Why is D/P between the RCS and the isolated SG maintained at +/- 50 psid?

A. (1) To minimize the likelihood of lifting a MSSV on the isolated SG
(2) To minimize the leak rate to and from the affected SG

B. (1) To minimize the likelihood of lifting a MSSV on the isolated SG
(2) To minimize the pressure stress across the degraded SG U-tube(s) to prevent further degradation

C. (1) To ensure SBCS remains available by minimizing D/P across the MSIV Bypass Valve
(2) To minimize the leak rate to and from the affected SG

D. (1) To ensure SBCS remains available by minimizing D/P across the MSIV Bypass Valve
(2) To minimize the pressure stress across the degraded SG U-tube(s) to prevent further degradation

Answer: A

Explanation:

A. Correct.
B. First part is correct. Second part is plausible since lower D/P across the degraded U-tubes will lower the likelihood for further degradation, however the reason for maintaining +/- 50 psid is to minimize leak rate.
C. First part is plausible since reopening the MSIV bypass to reduce pressure in the isolated SG is preferred over using ADVs, however the reason for maintaining pressure < 1135 psig is to prevent opening a Main Steam Safety on the affected SG. Second part is correct.
D. First part is plausible since reopening the MSIV bypass to reduce pressure in the isolated SG is preferred over using ADVs, however the reason for maintaining pressure < 1135 psig is to prevent opening a Main Steam Safety on the affected SG. Second part is plausible since lower D/P across the degraded U-tubes will lower the likelihood for further degradation, however the reason for maintaining +/- 50 psid is to minimize leak rate.

Question Source:		**Bank**	
		Modified Bank	
	x	**New**	
		Previous NRC Exam	

Question Cognitive Level:	**x**	**Memory or Fundamental Knowledge**
		Comprehension or Analysis
	3	**Level of Difficulty**

10 CFR Part 55 Content:	**41.5**

Reference Provided:	**None**

Learning Objective:	Describe the SGTR EOP mitigation strategy

Technical Reference: LOIT SGTR Lesson Plan
The critical steps for this HRA are the reduction of RCS temperature to <540F and RCS pressure to <1135psia. These conditions bring reactor coolant pressure less than the lift setpoints of the MSSVs and RCS temperature to a saturation pressure less than the MSSV setpoint. This minimizes the loss of coolant to the secondary side and reduces the possibility of lifting the MSSVs and maximizes the ability to isolate the ruptured SG to stop loss of primary inventory and the release of radioactivity. Subcooling is not expected to be lost with a single tube rupture, so two RCPs will be operating. RCP operation enhances the ability to cool down the plant. Natural circulation causes cooldown to take a much longer time, but this is not critical to ultimate success if the leak rate is minimized.

Technical Reference: LOIT SGTR Lesson Plan
d. The SG can be allowed to cool to ambient temperatures. Best estimate analysis shows that ambient cooling could take up to 27 hours to cool the isolated Steam Generator to SDC entry conditions. Therefore, it may not be the most practical choice. During the cooldown, the operator should maintain level in the indicating range and above the tubes. Maintaining the tubes covered is desirable to minimize the transfer of radionuclides from the primary to the secondary side of the Steam Generator through pre-existing cracks. RCS pressure should be maintained approximately equal (+/- 50 psi) to the isolated Steam Generator pressure to control primary to secondary leakage and SG level.

Technical Reference: 40DP-9AP09, SG Tube Rupture Technical Guideline

SG Tube Rupture Technical Guideline	40DP-9AP09	Revision 25

4.5.17 Step 17 - Maintain Isolated Steam Generator Pressure

A. The intent of this step is to ensure that high pressure in the isolated Steam Generator does not cause a Main Steam Safety Valve to lift causing an uncontrolled release.

- The cooldown that was begun to isolate the affected SG should continue until SDC entry conditions are met. The plant cooldown should be sufficient to prevent the isolated SG from approaching the lift setpoint of the MSSVs.
- The MSIV Bypass Valve and the SBCS can be used to steam to the condenser. The effectiveness of the bypass valve is limited by its size. It is, however more desirable to steam the isolated SG to the condenser than to steam directly to the environment. By steaming to the condenser some of the activity will be retained in the condenser rather than being released to the environment and this will provide a monitored release path via the off gas monitor.
- However, should the pressure in an isolated steam generator approach the lift setpoint for the associated MSSVs, it is desirable from the perspective of positive operator control and minimizing the possibility of an MSSV sticking open, that the ADV open first. This is accomplished by manually opening the ADV on increasing pressure to prevent the isolated steam generator from exceeding 1135 psia, or locally opening the ADV. To minimize the unmonitored release of radioactivity, use of the atmospheric steam dump valves on the affected steam generator should be minimized.

Technical Reference: 40DP-9AP09, SG Tube Rupture Technical Guideline
A. This step directs actions necessary to allow the RCS to be depressurized to SDC entry conditions. The pressure in an isolated Steam Generator will remain high during the cooldown due to thermal stratification of the secondary water. Without boiling and recirculation flows in the Steam Generator, the secondary side fluid is not well mixed. This pressure is a concern as the SGTR strategy maintains RCS pressure approximately equal (+/- 50 psi) to the isolated Steam Generators pressure. This strategy is intended to minimize the flow of reactor coolant through the ruptured tube(s) to the secondary side of the SG. Thus, RCS inventory is conserved, contamination of the secondary is minimized and overfilling of the isolated Steam Generator is avoided.

Examination Outline Cross-reference:	Level	RO	[redacted]	SRO
	Tier #	1	[redacted]	
	Group #	2	[redacted]	
	K/A #	051 G 2.2.44		
	Importance Rating	4.2	[redacted]	
K/A: Loss of Condenser Vacuum: Ability to interpret control room indications to verify the status and operation of a system, and understand how operator actions and directives affect plant and system conditions				

Question 24

Given the following conditions:

- Unit 1 is operating at 25% power
- Main Turbine load is 350 MW

Main Condenser Vacuum indications on B06:

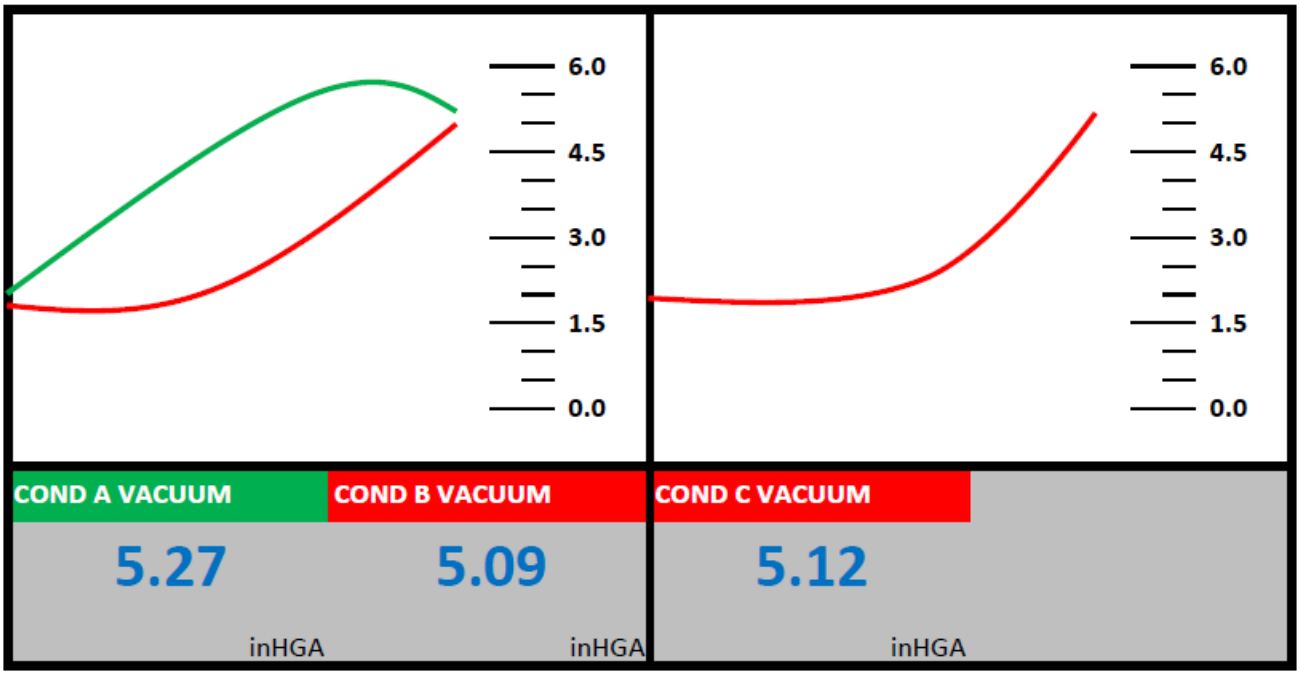

(1) Per 40AO-9ZZ07, Loss of Condenser Vacuum, the crew should manually trip the…

(2) Immediately following the trip, which SBCS Valves will be available to the crew for heat removal?

A. (1) Reactor

(2) 1007 and 1008 ONLY

B. (1) Reactor
(2) 1001 - 1008

C. (1) Main Turbine ONLY
(2) 1007 and 1008 ONLY

D. (1) Main Turbine ONLY
(2) 1001 - 1008

Answer: B

Explanation:

A. First part is correct. Second part is plausible since condenser pressure in the A shell did exceed the SBCS INTLK setpoint of 5.5” which would result in only 1007 and 1008 being available, however 5.5” must be exceeded in two shells to actuate the interlock, therefore all 8 SBCS valves are available.
B. Correct.
C. First part is plausible since at lower power levels, a loss of vacuum does warrant a turbine trip instead of a reactor trip, however with the generator synched to the grid at less than 410 MW, a reactor trip is directed if vacuum degrades to > 5” backpressure. Second part is plausible since condenser pressure in the A shell did exceed the SBCS INTLK setpoint of 5.5” which would result in only 1007 and 1008 being available, however 5.5” must be exceeded in two shells to actuate the interlock, therefore all 8 SBCS valves are available.
D. First part is plausible since at lower power levels, a loss of vacuum does warrant a turbine trip instead of a reactor trip, however with the generator synched to the grid at less than 410 MW, a reactor trip is directed if vacuum degrades to > 5” backpressure. Second part is correct.

Question Source:		**Bank**	
		Modified Bank	
	x	**New**	
		Previous NRC Exam	

Question Cognitive Level:		**Memory or Fundamental Knowledge**
	x	**Comprehension or Analysis**
	3	**Level of Difficulty**

10 CFR Part 55 Content:	**41.4**

Reference Provided:	**None**

Learning Objective:	Determine if a Reactor trip or Main Turbine trip is appropriate

Technical Reference: 40AO-9ZZ07, Loss of Condenser Vacuum

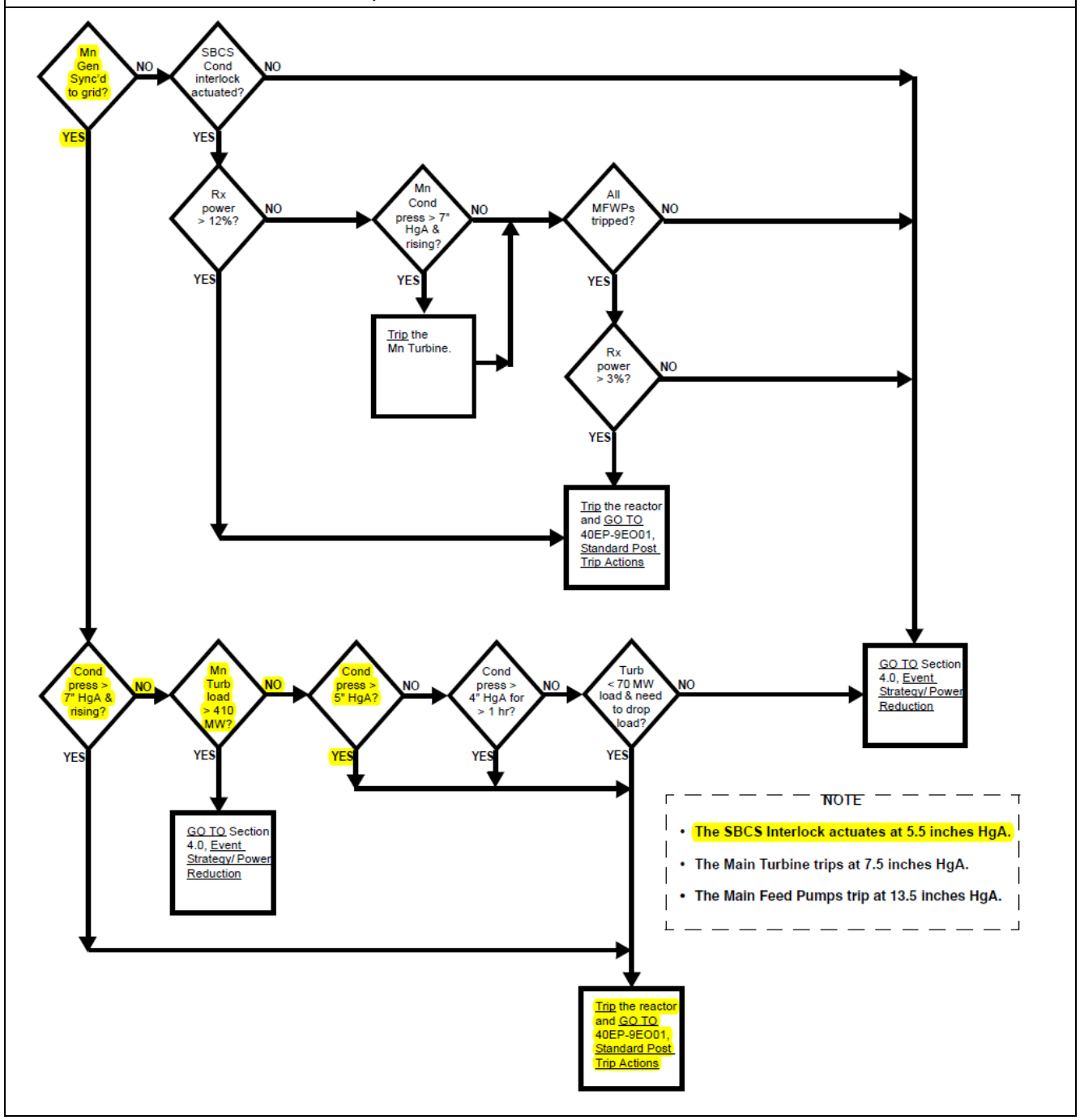

Technical Reference: SBCS Lesson Plan

Introduction

If main condenser vacuum is lost SBCS is significantly affected.

Main Idea

Since six of the eight bypass valves discharge to the condenser, the availability of the condenser for use as a heat sink must be established before the valves are permitted to operate.

Each condenser shell has two (2) pressure switches associated with SBCS, one for condenser interlock #1 and one for interlock #2. In order to set a condenser interlock, 2 out of the 3 associated condenser shell pressure switches must sense the high backpressure (approximately 5.5" HgA). Condenser Interlock #1 is used for the demand circuit and #2 is used for the permissive circuits.

The condenser interlock seals itself in and must be reset when condenser vacuum has recovered to below the setpoint. Reset is accomplished manually by turning SGN-HS-1010, EMERGENCY OFF/ RESET switch on B06, to the "RESET" position or by depressing the "EMERGENCY OFF CONDENSER INTERLOCK RESET" pushbutton on the SBCS Test Panel.

Examination Outline Cross-reference:	Level	RO		SRO
	Tier #	1		
	Group #	2		
	K/A #	069 G 2.1.28		
	Importance Rating	4.1		
K/A: Loss of CTMT Integrity: Knowledge of the purpose and function of major system components and controls				

Question 25

Which of the following failures would prevent a Containment Isolation Valve from automatically closing on a subsequent auto close signal?

A. A Train ‘A’ sequencer failure

B. A complete loss of Instrument Air

C. A loss of Class 120 VAC bus PNA-D25

D. A loss of Class 480 VAC MCC PHA-M35

Answer: D

Explanation:

A. Plausible since a Train 'A' sequencer failure will prevent several ESFAS actuated components from going to their actuated state, however the sequencer does not control CIVs.
B. Plausible since IA is the motive force for several CIVs, however IA is not the closure mechanism for CIVs.
C. Plausible as several CIVs are closed by AC powered MOVs, however the power supply for these MOVs is not PNA.
D. Correct.

Question Source:		**Bank**	
		Modified Bank	
	x	**New**	
		Previous NRC Exam	

Question Cognitive Level:		**Memory or Fundamental Knowledge**
	x	**Comprehension or Analysis**
	3	**Level of Difficulty**

10 CFR Part 55 Content:	**41.9**

Reference Provided:	**None**

Learning Objective:	Explain the operation of the Class 480 VAC MCCs under normal operating conditions

Technical Reference: PVNGS Operator Information Manual

While there are multiple CIVs which close on a SIAS and CSAS, none of those valves are actuated by the sequencers.

MODE 1
SAFETY INJECTION ACTUATION SIGNAL/
CONTAINMENT SPRAY ACTUATION SIGNAL

Time Seconds	Sequencer Starts
0	Diesel Generators Start (not started from the sequencer started directly from the SIAS or CSAS Auxiliary Relays)
0	High Pressure Safety Injection Pumps A & B
0	Charging Pump Permissive Actuation Relay Blocked (can be manually started)
5	Low Pressure Safety Injection Pumps A & B
5	Control Room Essential Air Handling Units A & B
5	Fuel Building Essential Air Filtration Units A & B
10	Auxiliary Feed Pump (Essential B)
15	Containment Spray Pumps A & B
20	Essential Cooling Water Pumps A & B
25	Essential Spray Ponds Pumps A & B
25	Diesel Generator Building Essential Exhaust Fans A & B
30	Essential Chillers A & B
40	Charging Pump Permissive Actuation Relay Unblocked

Technical Reference: 40AO-9ZZ06, Loss of Instrument Air

MSIVs and FWIVs fail as is on a loss of instrument air, however they will still auto close on an auto close signal since IA is not the motive force for fast closure (i.e. and auto closure)

SG	SGE-UV-170 / 171 / 180 / 181, MSIV (FAIL AS IS)	**NOTE** Fast closure operation is available via the accumulator, slow mode valve operation will not be available. ____ 1. **IF** the MSIVs will be closed, **THEN** fast close the MSIVs using **ANY** of the following:

60 - 50 psig SG	SGA-UV-174 / 177 & SGB-UV-132 / 137, SG 1 & 2 Economizer FW Isolation Valves (FAIL AS IS)	**NOTE** Fast closure operation is available via the accumulator, slow mode valve operation will not be available. ____ 1. **IF** the Economizer Isolation Valves will be closed, **THEN** fast close the FWIVs using **ANY** of the following:

Technical Reference: 40AO-9ZZ13, Loss of Class Instrument or Control Power

Appendix B, Channel A Tech Specs

TS / TRM LCO & Applicability		PKA M41	PKA D21	PNA D25	Comments
3.4.16	1 - 4	X	X		RU-1, Containment Atmosphere Monitor • Condition B • 24 hours • 74ST-9SQ07
3.5.3	1-3	X	X		HPSI and LPSI Pump A Breaker Control • Condition B • 72 hours
3.5.4	3,4	X	X		Required HPSI Pump A Breaker Control • Condition A • 1 hour
3.6.3	1-4	X	X		Containment Isolation Valves • Refer to TRM T7.0.300 for a list of Containment Isolation Valves and their associated Applicable Condition.

Technical Reference: 40OP-9PH01, Train A 480 V Class MCCs

Appendix E - PHA-M35, 480V Class 1E MCC

Number	Name	Location	Drawing	Required Position	Positioned By Initials & Date	Verified By Initials & Date
PHA-M3503	Ckt Brk for Shutdn Clg Iso Loop 1 Vlv SIA-UV-651	Aux Bldg, 120', West Elect Pen Rm	E-PHA-005	On		
PHA-M3504	SIA-UV-655 S/D Clng Cntmt Isol Vlv	Aux Bldg, 120', West Elect Pen Rm	E-PHA-005	On		
PHA-M3505	Ckt Brk for AFN-P01 Suction Isol Valve CTA-HV-4	Aux Bldg, 120', West Elect Pen Rm	E-PHA-005	On		
PHA-M3506	SIA-UV-664 Ckt Brk "A" CS Pump Recirc Vlv	Aux Bldg, 120', West Elect Pen Rm	E-PHA-005	On		
PHA-M3507	Ckt Brk for "A" HPSI Pump Recirc Valve SIA-UV-666	Aux Bldg, 120', West Elect Pen Rm	E-PHA-005	On		
PHA-M3507A	Ckt Brk for Backup Brkr M3503	Aux Bldg, 120', West Elect Pen Rm	E-PHA-005	On		
PHA-M3508	RDA-UV-23 Ckt Brk Ctmt/ Rad Sump Iso Vlv	Aux Bldg, 120', West Elect Pen Rm	E-PHA-005	On		
PHA-M3509	Spare	Aux Bldg, 120', West Elect Pen Rm	E-PHA-005	Off		
PHA-M3510	Ckt Brk for "A" LPSI Pump Recirc Valve SIA-UV-669	Aux Bldg, 120', West Elect Pen Rm	E-PHA-005	On		
PHA-M3511	Ckt Brk for Ctmt Spray Cont Vlv SIA-UV-672	Aux Bldg, 120', West Elect Pen Rm	E-PHA-005	On		
PHA-M3511A	Ckt Brk for Backup for M3508	Aux Bldg, 120', West Elect Pen Rm	E-PHA-005	On		
PHA-M3512	SIA-UV-673 "A" Cntmt Sump Isol Vlv	Aux Bldg, 120', West Elect Pen Rm	E-PHA-005	On		
PHA-M3513	SIA-UV-674 "A" Cntmt Sump Isol Train Vlv	Aux Bldg, 120', West Elect Pen Rm	E-PHA-005	On		
PHA-M3513A	Ckt Brk for Backup for M3512	Aux Bldg, 120', West Elect Pen Rm	E-PHA-005	On		
PHA-M3514	Ckt Brk for Return Ctmt Iso Vlv WCA-UV-62	Aux Bldg, 120', West Elect Pen Rm	E-PHA-005	On		
PHA-M3515	Ckt Brk for Rwt to SI Vlv CHA-HV-531	Aux Bldg, 120', West Elect Pen Rm	E-PHA-005	On		
PHA-M3516	Transfer Control Power for Ctmt Purge Refueling Mode	Aux Bldg, 120', West Elect Pen Rm	E-PHA-005	On		

Examination Outline Cross-reference:	Level	RO		SRO
	Tier #	1		
	Group #	2		
	K/A #	068 AK2.01		
	Importance Rating	3.9		
K/A: Control Room Evacuation: Knowledge of the interrelations between the Control Room Evacuation and the following: Auxiliary shutdown panel layout				

Question 26

During a Control Room evacuation due to a fire, the Pressurizer and Steam Generator level and pressure indications which are considered reliable are located on the ___(1)___ Remote Shutdown Panel and are protected from the potential effects of the fire by ___(2)___ .

A. (1) Train ‘A’
(2) the isolators in their circuitry

B. (1) Train ‘A’
(2) placing their LOCAL/REMOTE handswitches to LOCAL

C. (1) Train ‘B’
(2) the isolators in their circuitry

D. (1) Train ‘B’
(2) placing their LOCAL/REMOTE handswitches to LOCAL

Answer: C

Explanation:

A. First part is plausible since Train 'A' is where the station blackout generators tie in and the turbine driven AFW pump is a Train 'A' pump, however the indications with fire isolators in them are on Train 'B'. Second part is correct.
B. First part is plausible since Train 'A' is where the station blackout generators tie in and the turbine driven AFW pump is a Train 'A' pump, however the indications with fire isolators in them are on Train 'B'. Second part is plausible since there are LOCAL/REMOTE switches which isolate equipment from the control room to prevent spurious actuations due to hot shorts or grounds, however the indications do not have LOCAL/REMOTE disconnects, they have isolators in their circuitry.
C. Correct.
D. First part is correct. Second part is plausible since there are LOCAL/REMOTE switches which isolate equipment from the control room to prevent spurious actuations due to hot shorts or grounds, however the indications do not have LOCAL/REMOTE disconnects, they have isolators in their circuitry.

Question Source:		**Bank**	
		Modified Bank	
	x	**New**	
		Previous NRC Exam	

Question Cognitive Level:	**x**	**Memory or Fundamental Knowledge**
		Comprehension or Analysis
	2	**Level of Difficulty**

10 CFR Part 55 Content:	**41.10**

Reference Provided:	**None**

Learning Objective:	Decribe why Train B equipment is used to control the plant after a Control Room fire

Technical Reference: 40AO-9ZZ19, Control Room Fire

PALO VERDE NUCLEAR GENERATING STATION **CONTROL ROOM FIRE**	40AO-9ZZ19 Revision 35 Page 43 of 195 Appendix A Page 4 of 4

Appendix A, Primary Reactor Operator Actions

INSTRUCTIONS CONTINGENCY ACTIONS

---------- **NOTE** ----------

Eight instruments at the B Train RSP can be considered reliable. These 8 instruments have isolators in their circuits to prevent any effect from a control room fire.

Examination Outline Cross-reference:	Level	RO		SRO
	Tier #	1		
	Group #	2		
	K/A #	CE/A11 AA2.2		
	Importance Rating	3.0		
K/A: RCS Overcooling: Ability to determine and interpret the following as they apply to the RCS Overcooling: Adherence to appropriate procedures and operation within the limitations in the facility's license and amendments				

Question 27

Given the following conditions:

- Unit 1 was tripped due to a 20 gpm RCS leak into Containment.
- SPTAs have been completed and 40EP-9EO03, LOCA, has been entered.
- One RCP has been stopped in each loop.
- Containment conditions are NOT harsh.
- The crew commenced a cooldown and depressurization at 0200.
- Plant conditions at 0200:
  - RCS Tcold = 506°F
  - RCS Thot = 507°F
  - REP CET = 521°F
  - RCS Pressure = 2200 psia
- Plant conditions at 0300:
  - RCS Tcold = 408°F
  - RCS Thot = 410°F
  - REP CET = 419°F
  - RCS Pressure = 1700 psia

Based on current plant conditions, the _____(1)_____ has been exceeded, and the CRS should direct stopping the cooldown _____(2)_____ per 40EP-9EO03, LOCA.

Standard Appendix 2, RCS Press Temp Limits Normal CTMT Conditions, is provided.

A. 1. P/T limit
   2. and stabilizing RCS pressure

B. 1. P/T limit
   2. but continuing the RCS depressurization

C. 1. cooldown rate
   2. and maintaining pressure stable

D. 1. cooldown rate
   2. but continuing the RCS depressurization

Answer: B

Explanation:

A. First part is correct. Second part is plausible since stopping the cooldown and stabilizing pressure would allow the thermal stresses to be slowly absorbed in the vessel and by stopping the cooldown the RCS could slowly heat up resulting in parameters returning to the "good" side of the P/T curve, however per 40EP-9EO03, LOCA, the CRS should stop the cooldown and continuing to reduce pressure.

B. Correct. Per step 37 of 40EP-9EO03, LOCA, since the 200°F subcooling curve has been violated, the cooldown must be stopped and the RCS depressurized to get within RCS P/T limits.

C. Plausible since if REP CET is used the cooldown rate has been exceeded (521°F – 419°F)/1 hour = 102°F/hr, however Tcold is the value used to track cooldown rate. Second part is the correct action for exceeding 100°F/hr cooldown rate, however since the P/T limit was violated, stopping the cooldown and depressurizing is the correct action.

D. Plausible since if REP CET is used the cooldown rate has been exceeded (521°F – 419°F)/1 hour = 102°F/hr, however Tcold is the value used to track cooldown rate. Second part is the correct action for a P/T limit being exceeded.

Question Source:		**Bank**	
		Modified Bank	
	X	**New**	
		Previous NRC Exam	

Question Cognitive Level:		**Memory or Fundamental Knowledge**
	X	**Comprehension or Analysis**
	3	**Level of Difficulty**

10 CFR Part 55 Content:	**41.10**

Reference Provided:	**Standard Appendix 2, Figures, RCS P/T Limits**

Learning Objective:	Describe what actions are necessary if the RCS becomes over subcooled

Technical Reference: 40EP-9EO03, LOCA

INSTRUCTIONS	CONTINGENCY ACTIONS
✱ 37. Maintain RCS pressure within the P/T limits by performing the following: REFER TO Appendix 2, Figures a. Control the cooldown rate. b. Control pressurizer heaters and main or auxiliary spray. c. **IF** SI throttle criteria are met, **THEN** control charging, letdown, and HPSI flow. d. **WHEN** RCS cold leg temperature is less than or equal to 500°F, **THEN** ensure **NO** more than three RCPs are running.	37.1 **IF** the RCS exceeds the P/T limits, **THEN** perform the following to restore pressure and temperature to within the P/T limits: REFER TO Appendix 2, Figures a. **IF** a cooldown is in progress, **THEN** stop the cooldown. b. Depressurize the RCS using main or auxiliary pressurizer spray. c. **IF** SI throttle criteria are met, **THEN** control charging, letdown, and HPSI flow. 37.2 **IF** the cooldown rate is greater than 100°F/hr, **THEN** perform the following to restore the cooldown rate to within its limit: a. Stop the cooldown as necessary. b. Maintain the plant in a stable pressure-temperature configuration. c. Continue the plant cooldown within 100°F/hr.

Technical Reference: 40EP-9EO10, Standard Appendices

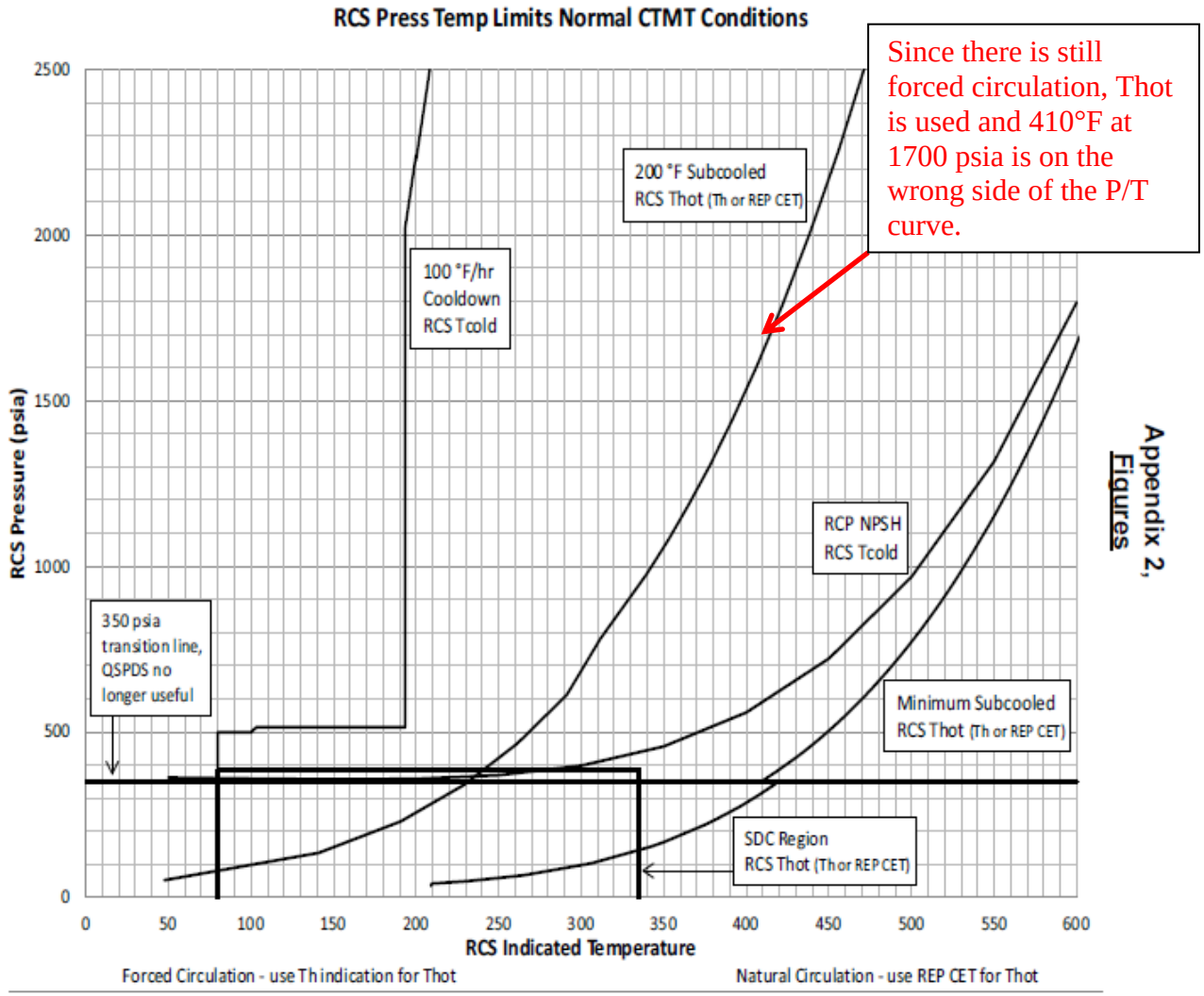

Examination Outline Cross-reference:	Level	RO		SRO
	Tier #	2		
	Group #	1		
	K/A #	003 K6.04		
	Importance Rating	2.8		
K/A: Reactor Coolant Pump: Knowledge of the effect of a loss or malfunction on the following will have on the RCPS: Containment isolation valves affecting RCP operation				

Question 28

Given the following conditions:

- Unit 2 is operating at 30% power
- Nuclear Cooling Water Containment Isolation Valve, NCA-UV-402, has spuriously closed

The crew must trip the Reactor and all RCPs if they cannot reopen NCA-UV-402 within a MAXIMUM of ___(1)___ minutes, and the AOP which will direct reopening NCA-UV-402 is ___(2)___ .

A. (1) 3
(2) 40AO-9ZZ03, Loss of Cooling Water

B. (1) 3
(2) 40AO-9ZZ04, Reactor Coolant Pump Emergencies

C. (1) 10
(2) 40AO-9ZZ03, Loss of Cooling Water

D. (1) 10
(2) 40AO-9ZZ04, Reactor Coolant Pump Emergencies

Answer: C

Explanation:

A. First part is plausible as 3 minutes is the limit on a loss of NC flow to the RCPs when seal injection is not in service, however since seal injection would not be affected by the loss of NC, there is a 10 minute limit to restore NC. Second part is correct.
B. First part is plausible as 3 minutes is the limit on a loss of NC flow to the RCPs when seal injection is not in service, however since seal injection would not be affected by the loss of NC, there is a 10 minute limit to restore NC. Second part is plausible as RCP Emergencies is entered on a loss of NC, however the actions to restore NC flow is in the Loss of Cooling Water AOP.
C. Correct.
D. First part is correct. Second part is plausible as RCP Emergencies is entered on a loss of NC, however the actions to restore NC flow is in the Loss of Cooling Water AOP.

Question Source:		**Bank**	
		Modified Bank	
	x	**New**	
		Previous NRC Exam	

Question Cognitive Level:		**Memory or Fundamental Knowledge**
	x	**Comprehension or Analysis**
	3	**Level of Difficulty**

10 CFR Part 55 Content:	**41.10**

Reference Provided:	**None**

Learning Objective:	Describe the limitations on RCP operation without NC

Technical Reference: 40AO-9ZZ03, Loss of Cooling Water

PALO VERDE NUCLEAR GENERATING STATION LOSS OF COOLING WATER	40AO-9ZZ03 Revision 11 Page 10 of 44

4.0 NUCLEAR COOLING WATER

INSTRUCTIONS	CONTINGENCY ACTIONS
____ 1. Enter AOP Entry Time and Date: _____	
____ 2. **IF** seal injection is **NOT** in service, **AND** cooling water is **NOT** restored to **ANY** operating RCP within **three minutes** of the initial loss, **THEN** perform the following: a. Ensure the reactor is tripped. b. Stop all of the RCPs. c. Isolate controlled bleedoff.	
____ 3. **IF** seal injection is in service, **AND** cooling water is **NOT** restored to **ANY** operating RCP within **10 minutes** of the initial loss, **THEN** perform the following: a. Ensure the reactor is tripped. b. Stop all of the RCPs. c. Isolate controlled bleedoff.	

Technical Reference: 40AO-9ZZ03, Loss of Cooling Water

4.0 NUCLEAR COOLING WATER

INSTRUCTIONS	CONTINGENCY ACTIONS
____ 6. **IF ANY** of the NC Containment Isolation Valves have failed closed, **AND** there is **NOT** a valid CSAS signal present, **THEN** perform the following:	
a. Open **ANY** closed isolation valves.	a.1 **IF ANY** of the NC Containment Isolation Valves will **NOT** open, **THEN** perform the following: 1) Close all NC CTMT Isolation Valves. 2) Ensure that the Reactor is tripped. 3) Stop all of the RCPs. 4) Isolate seal bleedoff. 5) GO TO the appropriate procedure for the current plant conditions.
b. Evaluate Tech Spec 3.6.3, Containment Isolation Valves.	
____ 7. **IF** the NC system has been restored, **THEN** GO TO the appropriate procedure for current plant conditions.	
____ 8. **IF ANY** RCPs are operating, **THEN** PERFORM 40AO-9ZZ04, Reactor Coolant Pump Emergencies.	

Examination Outline Cross-reference:	Level	RO		SRO
	Tier #	2		
	Group #	1		
	K/A #	004 A4.14		
	Importance Rating	2.8		
K/A: Chemical and Volume Control: Ability to manually operate and/or monitor in the control room: Ion exchangers and demineralizers				

Question 29

Letdown Ion Exchanger Bypass Valve, CHE-UV-520, will automatically bypass the Ion Exchangers if temperature at the outlet of the Letdown Heat Exchanger reaches a MINIMUM of ___(1)___ and when temperature returns to normal, CHE-UV-520 ___(2)___ to the Ion Exchangers.

A. (1) 125°F
(2) will automatically realign

B. (1) 125°F
(2) must be manually realigned

C. (1) 135°F
(2) will automatically realign

D. (1) 135°F
(2) must be manually realigned

Answer: D

Explanation:

A. First part is plausible since 125°F at the outlet of the LDHX will cause a high temperature alarm, however UV-520 doesn't bypass the IXs until 135°F. Second part is plausible since UV-520 does realign automatically in response to temperature, however only to bypass the IXs.
B. First part is plausible since 125°F at the outlet of the LDHX will cause a high temperature alarm, however UV-520 doesn't bypass the IXs until 135°F. Second part is correct.
C. First part is correct. Second part is plausible since UV-520 does realign automatically in response to temperature, however only to bypass the IXs.
D. Correct.

Question Source:	**x**	**Bank**	PV – Q71576
		Modified Bank	
		New	
		Previous NRC Exam	

Question Cognitive Level:	**x**	**Memory or Fundamental Knowledge**
		Comprehension or Analysis
	2	**Level of Difficulty**

10 CFR Part 55 Content:	**41.3**

Reference Provided:	**None**

Learning Objective:	Explain the operation of the IX Bypass Valve CHE-UV-520 under normal operating conditions

Technical Reference: 40AL-9RK3A, Panel B03A Alarm Responses

Response Section

3A10A
LD HDR SYS TRBL

Letdown Header System Trouble

Point ID	Description	Setpoint
CHTS224	Letdown Heat Exchanger to LD Back Press Valve Temp Hi	125°F

AUTOMATIC ACTION

- None

MANUAL ACTIONS

___ 1. Check CHN-TIC-223, Letdown Heat Exchanger Outlet Temp Control, temperature.

___ 2. **IF** CHN-TIC-223, Letdown Heat Exchanger Outlet Temp Control, indicates greater than or equal to 135°F,
THEN ensure ALL of the following:

- ___ CHB-UV-523, Letdown Ctmt Isol Valve, is closed
- ___ CHE-UV-521, Rad Monitor/Boronmeter Inlet/Bypass Valve, is in the bypass position
- ___ CHE-UV-520, Purification Ion Exchanger's Inlet/Bypass 3-Way Valve, is in the bypass position

Technical Reference: 40AL-9RK3A, Panel B03A Alarm Responses

9. **WHEN** BOTH of the following conditions exist:

- ___ The cause of the alarming condition is corrected
- ___ CHN-TIC-223, Letdown Heat Exchanger Outlet Temp Control, is maintaining temperature less than 135°F

THEN perform the following to reset the following valves:

___ 9.1 Take CHN-HS-521, RAD MON & BORON INLT/BYP SELECTOR VLV, to the BORON & P RAD position.

___ 9.2 Take CHN-HS-520, PUR IOXS INLET/BYPASS SELECTOR VLV, to the ION X position.

Technical Reference: LOIT CVCS Lesson Plan

EO: 1.21 Describe the automatic functions associated with the Letdown Ion Exchanger Bypass Valve (CHE-UV-520).

Introduction

This objective requires knowledge of each major component of the CVCS system including valve automatic functions.

Main Idea

Valve	Automatic Functions
CHE-UV-520	Shifts to the BYPASS position on high Letdown Heat Exchanger Temperature (TI-224) of 135 °F.

Examination Outline Cross-reference:	Level	RO		SRO
	Tier #	2		
	Group #	1		
	K/A #	004 K6.17		
	Importance Rating	4.4		
K/A: Chemical and Volume Control: Knowledge of the effect of a loss or malfunction on the following CVCS components: Flow paths for emergency boration				

Question 30

Given the following conditions:

- Unit 3 has tripped from 100% power
- An emergency boration is required
- RWT Level Transmitter LT-200 has failed to 0%
- RWT Level Transmitters LT-203A/B/C/D on B02 all indicate 95%

Per Standard Appendix 103, RCS Makeup / Emergency Boration, which of the following boration flowpaths are available SOLELY by taking actions from the Control Room?

1. CHN-UV-527, Makeup to Charging Pump Suction Valve
2. CHE-UV-536, RWT Gravity Feed to Charging Pumps Valve
3. CHN-UV-514, Boric Acid Makeup to Charging Pumps Valve

A. 1 and 2

B. 1 and 3

C. 2 ONLY

D. 3 ONLY

Answer: C

Explanation:

A. Plausible that CHN-UV-527 would be available since this is the normal method of emergency boration, requires no field actions, and actual level in the RWT is 95%, however if LT-200 indicates < 73% the BAMPs will not start which prevents the use of UV-527 for boration. CHE-UV-536 is correct.
B. Plausible that CHN-UV-527 would be available since this is the normal method of emergency boration, requires no field actions, and actual level in the RWT is 95%, however if LT-200 indicates < 73% the BAMPs will not start which prevents the use of UV-527 for boration. Plausible that CHN-UV-514 would be available since this valve can be used without the use of field actions, and it can still be used without BAMPs being available, however if UV-514 is used without BAMPs available, manual field actions are required to bypass the discharge filter for gravity feed flow.
C. Correct.
D. Plausible that CHN-UV-514 would be available since this valve can be used without the use of field actions, and it can still be used without BAMPs being available, however if UV-514 is used without BAMPs available, manual field actions are required to bypass the discharge filter for gravity feed flow.

Question Source:		**Bank**	
		Modified Bank	
	x	**New**	
		Previous NRC Exam	

Question Cognitive Level:		**Memory or Fundamental Knowledge**
	x	**Comprehension or Analysis**
	3	**Level of Difficulty**

10 CFR Part 55 Content:	**41.6**

Reference Provided:	**None**

Learning Objective:	Explain the operation of the RWT under normal operating conditions

Technical Reference: PVNGS Operator Information Manual

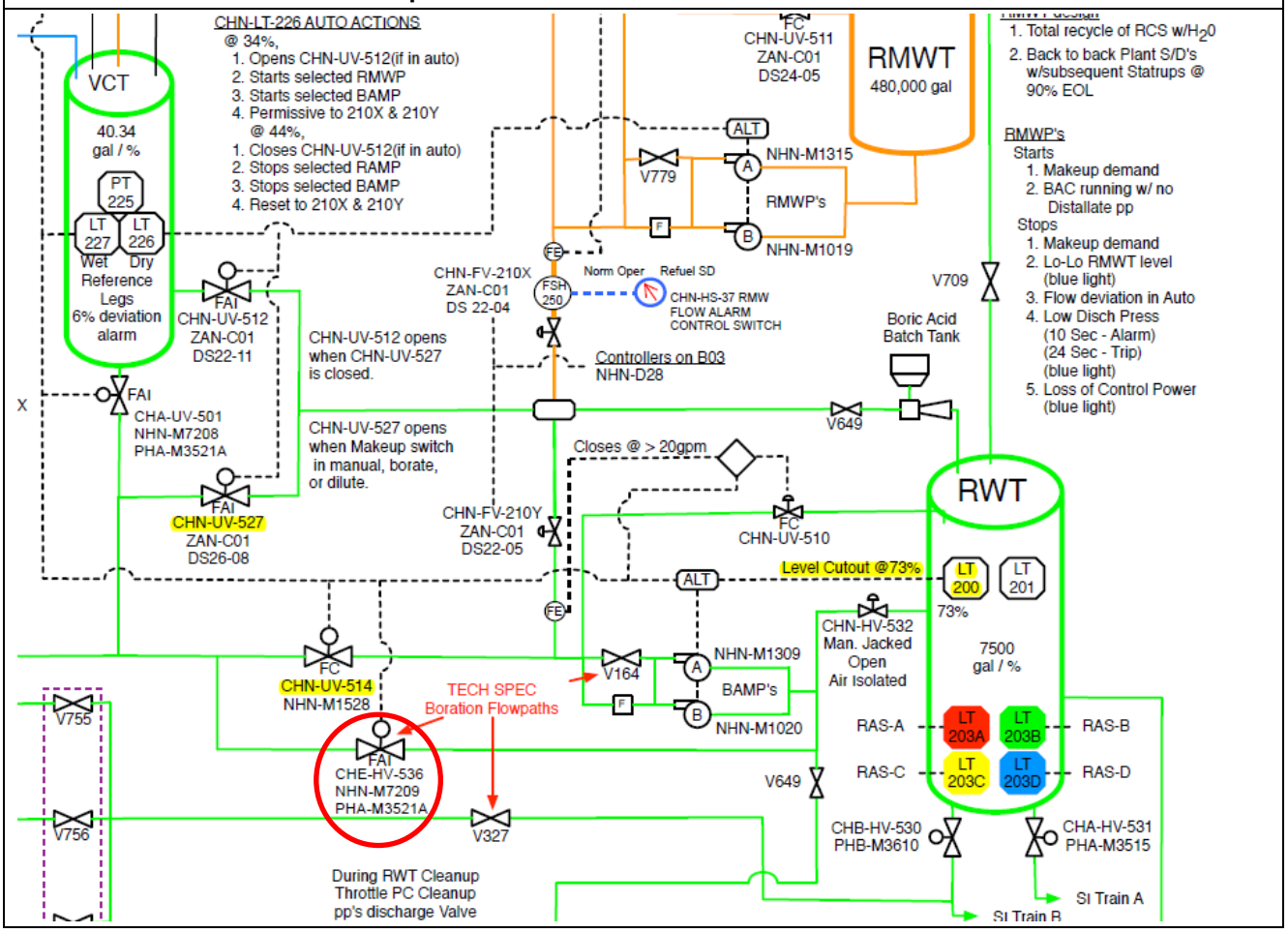

Technical Reference: CVCS Tech Manual

2.3.15 Refueling Water Tank Level Instrument (CH-LT-200)

When level in the RWT decreases to 73% as sensed by LT-200, the BAMPs will receive a trip signal.

When level in the RWT increases to 95% as sensed by LT-200, a high level alarm input is received by the BAM TRBL alarm. When level in the RWT decreases to 87% as sensed by LT-200, a low level alarm input is received by the BAM TRBL alarm. When level in the RWT decreases to 73% as sensed by LT-200, a lo-lo level alarm input is received by the RWT LVL lo-lo alarm.

Examination Outline Cross-reference:	Level	RO		SRO
	Tier #	2		
	Group #	1		
	K/A #	005 G 2.2.38		
	Importance Rating	3.6		
K/A: Residual Heat Removal: Knowledge of conditions and limitations in the facility license				

Question 31

In order to meet the operability requirements of LCO 3.4.6, RCS Loops – MODE 4, a MINIMUM of ___(1)___ RCS loops and SDC trains (any combination) must be OPERABLE and a MINIMUM of ___(2)___ RCS loop(s) and/or SDC train(s) must be in operation.

A. (1) 2
(2) 1

B. (1) 2
(2) 2

C. (1) 3
(2) 1

D. (1) 3
(2) 2

Answer: A

Explanation:

A. Correct.
B. First part is correct. Second part is plausible since in MODE 5 one train must be in operation and MODE 4 has a higher heat removal demand, however there is only one train/loop required to be in operation in MODE 4.
C. First part is plausible if thought that a minimum of one train of SDC and one RCS loop must be operable with an additional train or loop available, however only two total trains/loops must be operable in MODE 4. Second part is correct.
D. First part is plausible if thought that a minimum of one train of SDC and one RCS loop must be operable with an additional train or loop available, however only two total trains/loops must be operable in MODE 4. Second part is plausible since in MODE 5 one train must be in operation and MODE 4 has a higher heat removal demand, however there is only one train/loop required to be in operation in MODE 4.

Question Source:		**Bank**	
		Modified Bank	
	x	**New**	
		Previous NRC Exam	

Question Cognitive Level:	**x**	**Memory or Fundamental Knowledge**
		Comprehension or Analysis
	3	**Level of Difficulty**

10 CFR Part 55 Content:	**41.8**

Reference Provided:	**None**

Learning Objective:	Determine whether or not the LCOs of 3.4 are satisfied

Technical Reference: Technical Specifications
3.4 REACTOR COOLANT SYSTEM (RCS) 3.4.6 RCS Loops – MODE 4 LCO 3.4.6 Two loops or trains consisting of any combination of RCS loops and shutdown cooling (SDC) trains shall be OPERABLE and at least one loop or train shall be in operation.

Examination Outline Cross-reference:	Level	RO		SRO
	Tier #	2		
	Group #	1		
	K/A #	006 A1.17		
	Importance Rating	4.2		
K/A: Emergency Core Cooling: Ability to predict and/or monitor changes in parameters (to prevent exceeding design limits) associated with operating the ECCS controls including: ECCS flow rate				

Question 32

Given the following conditions:

- An ESD has occurred on Unit 1
- SIAS was manually actuated on trend
- Pressurizer pressure is 1950 psia and lowering

(1) HPSI flow will START to INDICATE when flow to each loop reaches a MINIMUM of …

(2) When RCS pressure has subsequently risen to greater than HPSI Pump shutoff head, the pump should be secured within a MAXIMUM of…

A. (1) ~ 30 gpm
(2) 15 minutes

B. (1) ~ 30 gpm
(2) 1 hour

C. (1) ~ 75 gpm
(2) 15 minutes

D. (1) ~ 75 gpm
(2) 1 hour

Answer: D

Explanation:

A. First part is plausible since the first indicating line on the transmitter is 30 gpm, however the flow indication doesn't come on scale until 8-10% of full flow (750 gpm). Second part is plausible since the EDGs can only run for 15 minutes without cooling water, however the HPSI Pumps can be run for up to one hour on recirc.
B. First part is plausible since the first indicating line on the transmitter is 30 gpm, however the flow indication doesn't come on scale until 8-10% of full flow (750 gpm). Second part is correct.
C. First part is correct. Second part is plausible since the EDGs can only run for 15 minutes without cooling water, however the HPSI Pumps can be run for up to one hour on recirc.
D. Correct.

Question Source:		**Bank**	
		Modified Bank	
	x	**New**	
		Previous NRC Exam	

Question Cognitive Level:		**Memory or Fundamental Knowledge**
	x	**Comprehension or Analysis**
	3	**Level of Difficulty**

10 CFR Part 55 Content:	**41.7**

Reference Provided:	**None**

Learning Objective:	Describe the design characteristics of the HPSI pumps

Technical Reference: LOIT Safety Injection Lesson Plan

Introduction

The SI system provides a substantial number of indications readily available to the operator on B02. The student will not be held accountable for instrument ranges.

Main Idea

All Foxboro flow indicators go off-scale at approximately 8 to 10% due to limitations with the square root extractors. The HPSI flow indicators, for example, will not read accurately below 75 gpm.

INDICATOR	*RANGE*	*NOTES*
HPSI FLOW TO RCS COLD LEGS SIA-FI-331 (typical of 8)	***0-750 gpm***	***Flow indicator located on B02 that provides the operator with indication of HPSI flow to the cold legs. These indicators are used to determine acceptability of HPSI injection flow in EOPs and when balancing hot and cold leg flows when that method of injection has been established. Interestingly, both the "A" and "B" side of B02 have flow indicators for all four cold legs and thereby provide redundant, not additive, indication.*** **These indicators can be found on 01-M-SIP-002.**
HOT LEG INJECTION A FLOW SIA-FI-390	***0-750 gpm***	***Flow indicator located on B02 that provides the operator with indication of hot leg flow. These indicators are used when balancing hot and cold leg flows when that method of injection has been established. SIB-FI-391 is provided for Train B.*** **These indicators can be found on 01-M-SIP-002.**

Examination Outline Cross-reference:	Level	RO		SRO
	Tier #	2		
	Group #	1		
	K/A #	003 G 2.4.1		
	Importance Rating	4.6		
K/A: Reactor Coolant Pump: Knowledge of EOP entry conditions and immediate action steps				

Question 33

Per 40AO-9ZZ18, Shutdown Outside the Control Room, after the Reactor is tripped, the crew should stop ___(1)___ and if the RCPs do not trip from B04, the crew should ___(2)___ .

A. (1) all four RCPs
(2) direct an operator to trip all four RCPs at the switchgear

B. (1) all four RCPs
(2) de-energize NAN-S01 and NAN-S02 to stop all four RCPs

C. (1) one RCP in each loop
(2) direct an operator to trip one RCP in each loop at the switchgear

D. (1) one RCP in each loop
(2) de-energize either NAN-S01 or NAN-S02 to stop one RCP in each loop

Answer: C

Explanation:

A. First part is plausible since the Remote Shutdown Panel (RSP) has no controls or indications for RCPs or RCP cooling water and cannot be verified to be operating within limitations (an RCP running without cooling water is subject to seal failure within 30 minutes). Mitigating this risk by transitioning to natural circulation is a plausible action to take. Second part is correct.
B. First part is plausible since the Remote Shutdown Panel (RSP) has no controls or indications for RCPs or RCP cooling water and cannot be verified to be operating within limitations (an RCP running without cooling water is subject to seal failure within 30 minutes). Mitigating this risk by transitioning to natural circulation is a plausible action to take. Second part is plausible since de-energizing NAN-S01 and/or NAN-S02 is directed in 40AO-9ZZ04, RCP Emergencies, if RCPs need to be secured but the handswitches on B04 do not stop the pumps.
C. Correct.
D. First part is correct. Second part is plausible since de-energizing NAN-S01 and/or NAN-S02 is directed in 40AO-9ZZ04, RCP Emergencies, if RCPs need to be secured but the handswitches on B04 do not stop the pumps.

Question Source:		**Bank**	
		Modified Bank	
	x	**New**	
		Previous NRC Exam	

Question Cognitive Level:	**x**	**Memory or Fundamental Knowledge**
		Comprehension or Analysis
	3	**Level of Difficulty**

10 CFR Part 55 Content:	**41.10**

Reference Provided:	**None**

Learning Objective:	State the operator actions that are required to be performed prior to Control Room evacuation

Technical Reference: 40AO-9ZZ18, Shutdown Outside Control Room

3.0 INSTRUCTIONS / CONTINGENCY ACTIONS

INSTRUCTIONS | CONTINGENCY ACTIONS

____ 1. Enter AOP Entry Time and Date:

_____

---------- **NOTE** ----------

40EP-9EO01, Standard Post Trip Actions, are **NOT** performed when the Control Room is evacuated.

---------- **NOTE** ----------

Step 2 through Step 6 are expected to be performed in the Control Room.

____ 2. Perform the following:

a. Trip the reactor.

b. Check that power is lowering.

c. Check that all full strength CEAs are inserted.

d. Enter the time of the trip:

_____

____ 3. Stop one RCP in each loop.

____3.1 Direct an operator to trip one RCP in each loop at the switchgear.

Technical Reference: 40AO-9ZZ04, RCP Emergencies

Appendix E, Control Room Board B04 Label

The label below may be used as an operator aid on control board B04.*

Seal Bleed-off Isolation	
RCP OPERATING	RCP IN STANDBY
Stop RCPs and Close Seal Bleed-off Valves on Loss of:	Close Seal Bleed-off Valves on Loss of:
Nuclear Cooling Water (10 minutes)	Nuclear Cooling Water (As soon as possible)
Nuclear Cooling Water and Seal Injection (3 minutes)	Nuclear Cooling Water and Seal Injection (3 minutes)
	Seal Injection (If Seal 2 Outlet Temperature exceeds 250 F)
IF RCP(s) must be stopped due to exceeding the above operating limits, AND the affected RCP(s) cannot be stopped using their hand switches, THEN stop the affected RCP(s) by de-energizing the associated 13.8 KV bus(es).	

Examination Outline Cross-reference:	Level	RO		SRO
	Tier #	2		
	Group #	1		
	K/A #	007 K1.03		
	Importance Rating	3.0		
K/A: Pressurizer Relief/Quench Tank: Knowledge of the physical connections and/or cause-effect relationships between the PRTS and the following systems: RCS				

Question 34

While operating at 100% power, which of the following conditions, individually, will cause Reactor Drain Tank level and pressure to rise?

1. RCS Pressure of 2425 psia
2. The in-service Backpressure Control Valve failing closed
3. Spurious closure of CHB-UV-505, Controlled Bleedoff Containment Isolation Valve

A. 1 and 2 ONLY

B. 1 and 3 ONLY

C. 2 ONLY

D. 3 ONLY

Answer: D

Explanation:

A. Plausible since the Pressurizer Safety valves do relieve to the RDT, however the pressurizer safety valves don't lift until a minimum of 2450.25 psia. A backpressure control valve failing closed will result in the letdown relief valve lifting, however those reliefs send water to the Equipment Drain Tank.
B. Plausible since the Pressurizer Safety valves do relieve to the RDT, however the pressurizer safety valves don't lift until a minimum of 2450.25 psia. Closure of CHB-UV-505 is correct.
C. Plausible since other relief valves which relieve reactor coolant relieve to the RDT, however the letdown reliefs relieve to the EDT.
D. Correct.

Question Source:		**Bank**	
		Modified Bank	
	x	**New**	
		Previous NRC Exam	

Question Cognitive Level:		**Memory or Fundamental Knowledge**
	x	**Comprehension or Analysis**
	3	**Level of Difficulty**

10 CFR Part 55 Content:	**41.3**

Reference Provided:	**None**

Learning Objective:	Explain the operation of the Pressurizer Safety Valves under normal operating conditions

Technical Reference: PVNGS Operator Information Manual

The pzr safeties relieve to the RDT
The closure of the backpressure valve will result in the letdown relief sending RC to the EDT
The closure of CHB-UV-505 will cause the bleedoff relief (CHN-PSV-199) to relieve to the RDT

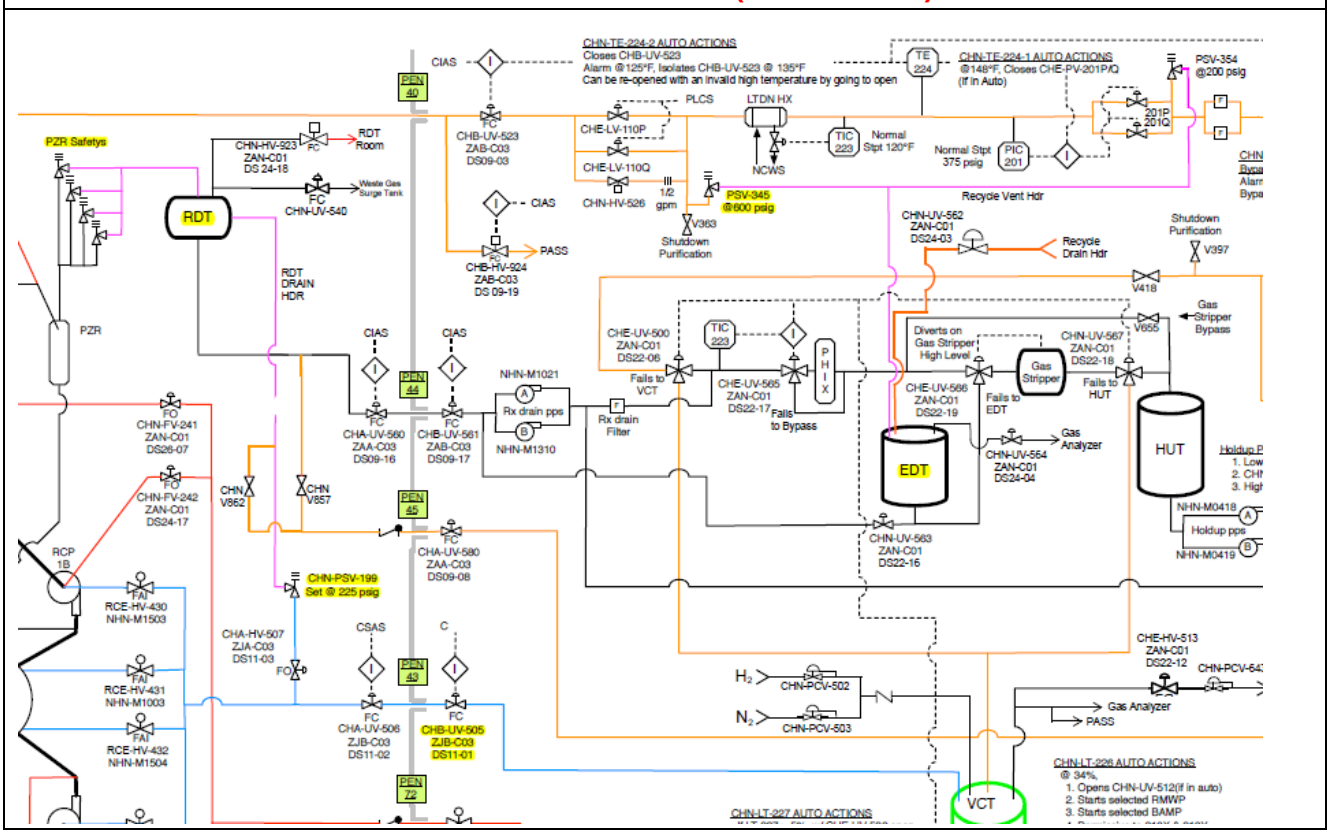

Examination Outline Cross-reference:	Level	RO		SRO
	Tier #	2		
	Group #	1		
	K/A #	008 A4.01		
	Importance Rating	3.3		
K/A: Component Cooling Water: Ability to manually operate and/or monitor in the control room: CCW indications and controls				

Question 35

Given the following conditions:

- Unit 1 is operating at 100% power
- Train ‘B’ Essential Cooling Water is cross-tied with Nuclear Cooling Water supplying the essential NC loads
- Both NCW pumps are in Pull-to-Lock

Based on these conditions, which of the following conditions, individually, would isolate cooling water to the RCPs?

1. Train ‘B’ SIAS
2. Train ‘B’ CSAS
3. Low Level in the ‘B’ EW Surge Tank

A. 1 ONLY

B. 2 ONLY

C. 1 and 3 ONLY

D. 2 and 3 ONLY

Answer: B

Explanation:

A. Plausible since a Train 'A' SIAS will isolate cooling to the RCPs when cross-tied with Train 'A' EW, however when NC is cross-tied with Train 'B' EW, cooling will not automatically be isolated to the RCPs.
B. Correct. The Train 'B' CSAS will close containment isolation valves in the NC system which will stop EW flow to the RCPs.
C. Same plausibility as distractor A for the Train 'B' SIAS. Plausible since a low level in the 'A' EW surge tank will isolate the cross tie between Train 'A' EW and the NC system, however this does not happen when Train 'B' is supplying NC loads.
D. Train 'B' CSAS is correct. Same plausibility for the low level in the 'B' surge tank.

Question Source:		**Bank**	
		Modified Bank	
	x	**New**	
		Previous NRC Exam	

Question Cognitive Level:		**Memory or Fundamental Knowledge**
	x	**Comprehension or Analysis**
	3	**Level of Difficulty**

10 CFR Part 55 Content:	**41.7**

Reference Provided:	**None**

Learning Objective:	Describe the automatic features associated with the NC Containment Isolation Valves

Technical Reference: 40AO-9ZZ03, Loss of Cooling Water

Appendix A, Cross-connect EW to NC

INSTRUCTIONS	CONTINGENCY ACTIONS
____ 1. Enter Appendix Entry Time and Date: _____	

---------- **NOTE** ----------

Cross-connecting EW and NC renders the EW Train inoperable per LCO 3.7.7, Essential Cooling Water (EW) System. Refer to 40ST-9EC03 and 40DP-9OP37 for impacts on supported system operability.

---------- **NOTE** ----------

The cross-connect of Essential Cooling Water Train A with Nuclear Cooling Water will be lost on a SIAS or Essential Cooling Water surge tank A low level.

Technical Reference: 40AO-9ZZ17, Inadvertent PPS-ESFAS Actuations

Attachment C-8 CSAS Train B Page 1 of 1

Actuation Leg		Component	Handswitch	Actuated Condition	In Actuated Condition (Circle one)	As Left Condition (Circle one)
1-3		Diesel Generator B	DGB-HS-2	Running	Y / N	Run / Stop
1-3		Control Room Essential AHU Fan B	HJB-HS-29	Running	Y / N	Run / Stop
1-3		Essential Chiller / Chilled Water Pump B	ECB-HS-2A	Running	Y / N	Run / Stop
1-3		Essential Cooling Water Pump B	EWB-HS-2	Running	Y / N	Run / Stop
1-3		Essential Spray Pond Pump B	SPB-HS-2	Running	Y / N	Run / Stop
	2-4	Containment Spray B Discharge to Spray Header 2 Valve	SIB-HS-671	Open	Y / N	Open / Closed
1-3		HPSI Pump B	SIB-HS-2	Running	Y / N	Run / Stop
1-3		Containment Spray Pump B	SIB-HS-6	Running	Y / N	Run / Stop
1-3		LPSI Pump B	SIB-HS-4	Running	Y / N	Run / Stop
1-3		Essential Electric Auxiliary Feed Pump	AFB-HS-10	Running	Y / N	Run / Stop
1-3		RCP Control Bleed-Off Header to VCT Isolation Valve	CHB-HS-505	Closed	Y / N	Open / Closed
1-3		NCW Containment Upstream Return Isolation Valve	NCB-HS-403	Closed	Y / N	Open / Closed
1-3		NCW Containment Upstream Supply Isolation Valve	NCB-HS-401	Closed	Y / N	Open / Closed

Technical Reference: Essential Cooling Water Tech Manual

2.7 Piping and Valves

Piping to and from the essential cooling water heat exchangers is carbon steel (corrosion protection is provided by chemical addition). Supply and return piping to and from system components is physically separated from supply and return lines in the redundant flow train.

Two EW system valves can be operated from the control room. They are the isolation valves in the cross-tie lines between EW system train A and the NC system, UV-145 and UV-65. These valves close automatically upon receipt of either a low level signal from the train A surge tank or a SIAS. Manual valves HCV-66 and HCV-146 may be opened to supply the NC system from EW system train B.

Both EW system trains cross connect independently with the NC system to act as a backup cooling source for their respective spent fuel pool cooling heat exchangers. Normally closed manual isolation valves are on the EW tie lines to the spent fuel pool heat exchangers.

Examination Outline Cross-reference:	Level	RO		SRO
	Tier #	2		
	Group #	1		
	K/A #	010 K1.06		
	Importance Rating	2.9		
K/A: Pressurizer Pressure Control: Knowledge of the physical connections and/or cause-effect relationships between the PZR PCS and the following systems: CVCS				

Question 36

The Main Spray Valves are connected to the RCS at the discharge of the ___(1)___ RCPs and the Auxiliary Spray Valves are ___(2)___ when the Charging Pumps are aligned to the alternate discharge header.

A. (1) Loop 1
(2) available

B. (1) Loop 1
(2) unavailable

C. (1) Loop 2
(2) available

D. (1) Loop 2
(2) unavailable

Answer: B

Explanation:

A. First part is correct. Second part is plausible since charging flow is the motive force for aux spray and charging remains in service when aligned to alternate discharge header, however aux spray valves are bypassed when the alternate discharge header is in use.
B. Correct.
C. First part is plausible since main spray valves are in the same loop, however that loop is loop 1. Second part is plausible since charging flow is the motive force for aux spray and charging remains in service when aligned to alternate discharge header, however aux spray valves are bypassed when the alternate discharge header is in use.
D. First part is plausible since main spray valves are in the same loop, however that loop is loop 1. Second part is correct.

Question Source:		**Bank**	
		Modified Bank	
	x	**New**	
		Previous NRC Exam	

Question Cognitive Level:	**x**	**Memory or Fundamental Knowledge**
		Comprehension or Analysis
	3	**Level of Difficulty**

10 CFR Part 55 Content:	**41.3**

Reference Provided:	**None**

Learning Objective:	Describe the interrelationship between the PPCS system and the CVCS system

Technical Reference: PVNGS Operator Information Manual

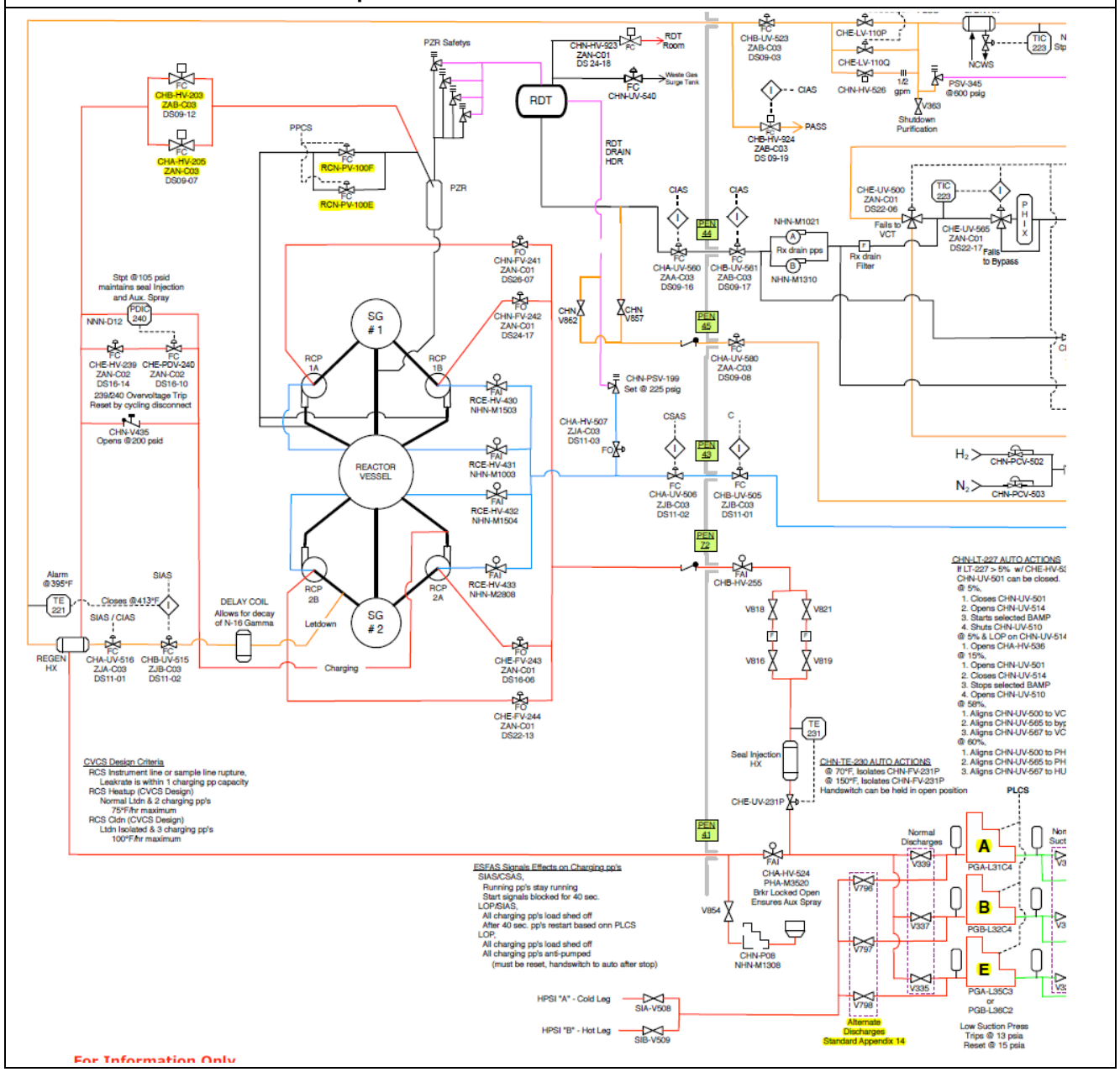

Examination Outline Cross-reference:	Level	RO		SRO
	Tier #	2		
	Group #	1		
	K/A #	012 K3.01		
	Importance Rating	3.9		
K/A: Reactor Protection: Knowledge of the effect that a loss or malfunction of the RPS will have on the following: CRDS				

Question 37

Given the following conditions:

- Unit 3 is operating at 100% power
- SPS Pressurizer Pressure transmitter, PT-199C, failed to 2500 psia

With NO operator action, the 'C' RTCB will ___(1)___ and the CEDMCS MG Set Output Contactor(s) will ___(2)___ .

A. (1) open
(2) remain closed on BOTH MG sets

B. (1) open
(2) open on ONE of the two MG sets

C. (1) remain closed
(2) remain closed on BOTH MG sets

D. (1) remain closed
(2) open on ONE of the two MG sets

Answer: A

Explanation:

A. Correct.
B. First part is correct. Second part is plausible since the failed transmitter will cause actuations to occur (like opening one RTCB), however the MG set output contactors will not open unless two SPS transmitters exceed the trip setpoint of 2409 psia.
C. First part is plausible since RTCBs don't open on a failure of one transmitter in most cases, however the SPS transmitters will each open one RTCB when 2409 psia is exceeded. Second part is correct.
D. First part is plausible since RTCBs don't open on a failure of one transmitter in most cases, however the SPS transmitters will each open one RTCB when 2409 psia is exceeded. Second part is plausible since the failed transmitter will cause actuations to occur (like opening one RTCB), however the MG set output contactors will not open unless two SPS transmitters exceed the trip setpoint of 2409 psia.

Question Source:		**Bank**	
		Modified Bank	
	x	**New**	
		Previous NRC Exam	

Question Cognitive Level:	**x**	**Memory or Fundamental Knowledge**
		Comprehension or Analysis
	3	**Level of Difficulty**

10 CFR Part 55 Content:	**41.7**

Reference Provided:	**None**

Learning Objective:	Describe the output functions of the Supplementary Protection System initiation relays

Technical Reference: PVNGS Operator Information Manual

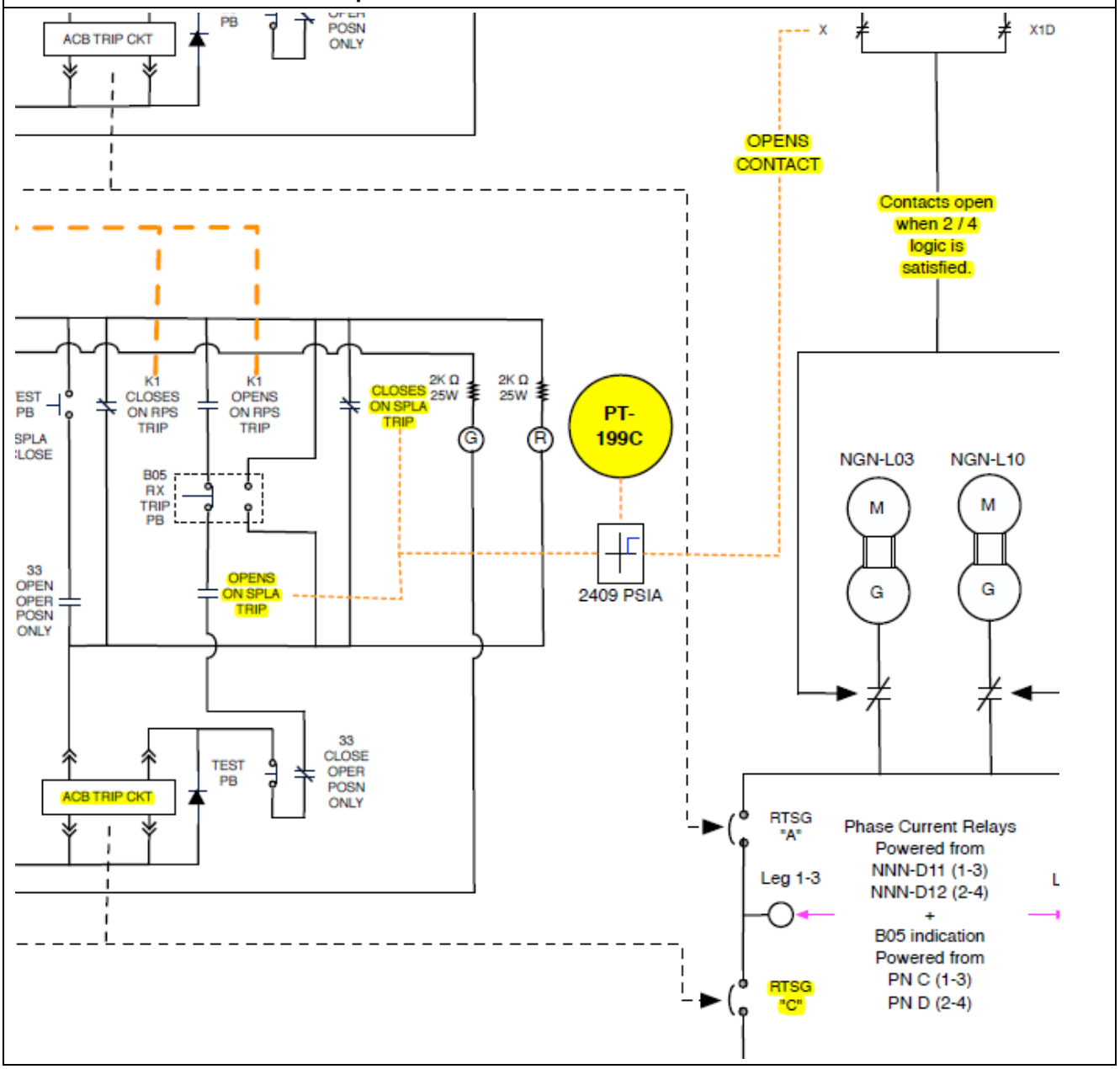

Examination Outline Cross-reference:	Level	RO		SRO
	Tier #	2		
	Group #	1		
	K/A #	013 K3.02		
	Importance Rating	4.3		
K/A: Engineered Safety Features Actuation: Knowledge of the effect that a loss or malfunction of the ESFAS will have on the following: RCS				

Question 38

(1) Following an inadvertent Train ‘A’ MSIS actuation, RCS Heat Removal is available using…

(2) Following an inadvertent Train ‘A’ CIAS actuation, RCS Pressure Control is available using…

A. (1) ADVs ONLY
(2) Aux Spray ONLY

B. (1) ADVs ONLY
(2) Main AND Aux Spray

C. (1) ADVs AND SBCS
(2) Aux Spray ONLY

D. (1) ADVs AND SBCS
(2) Main AND Aux Spray

Answer: B

Explanation:

A. First part is correct. Second part is plausible since a CSAS (Phase B Isolation) would isolate instrument air to containment by closing IAA-UV-2 (instrument air to containment isolation valve), rendering main spray unavailable, but a CIAS (Phase A Isolation) would not.
B. Correct.
C. First part – it is plausible that a Train 'A' MSIS would only isolate the MSIVs on SG#1, allowing SBCS to remain in operation, however, either Train MSIS will close both MSIVs. Also, its plausible to assume a 'A' MSIS would only isolate SG#1 just as an AFAS-1 only feeds SG#1. Second part is plausible since a CSAS (Phase B Isolation) would isolate instrument air to containment by closing IAA-UV-2 (instrument air to containment isolation valve), rendering main spray unavailable, but a CIAS (Phase A Isolation) would not.
D. First part – it is plausible that a Train 'A' MSIS would only isolate the MSIVs on SG#1, allowing SBCS to remain in operation, however, either Train MSIS will close both MSIVs. Also, its plausible to assume a 'A' MSIS would only isolate SG#1 just as an AFAS-1 only feeds SG#1. Second part is correct.

Question Source:		**Bank**	
		Modified Bank	
	x	**New**	
		Previous NRC Exam	

Question Cognitive Level:		**Memory or Fundamental Knowledge**
	x	**Comprehension or Analysis**
	3	**Level of Difficulty**

10 CFR Part 55 Content:	**41.4**

Reference Provided:	**None**

Learning Objective:	Recognize and respond to indications of an inadvertent ESFAS signal

Technical Reference: 40AO-9ZZ17, Inadvertent PPS-ESFAS Actuations

Attachment C-9 MSIS Train A Page 1 of 2

Actuation Leg		Component	Handswitch	Actuated Condition	In Actuated Condition (Circle one)	As Left Condition (Circle one)
1-3		MSIV Bypass Isolation Valve	SGA-HS-169A	Closed	Y / N	Open / Closed
1-3		Line 1 MSIV	SGA-HS-170A	Closed	Y / N	Open / Closed
1-3		Line 2 MSIV	SGA-HS-180A	Closed	Y / N	Open / Closed
1-3		Economizer FWIV	SGA-HS-174A	Closed	Y / N	Open / Closed
1-3		Downcomer Isolation Valve	SGA-HS-172	Closed	Y / N	Open / Closed
1-3		Economizer FWIV	SGA-HS-177A	Closed	Y / N	Open / Closed
1-3		Downcomer Isolation Valve	SGA-HS-175	Closed	Y / N	Open / Closed
1-3		MSIV Bypass isolation Valve	SGA-HS-183A	Closed	Y / N	Open / Closed
1-3		Line 1 MSIV	SGA-HS-171A	Closed	Y / N	Open / Closed
1-3		Line 2 MSIV	SGA-HS-181A	Closed	Y / N	Open / Closed

Technical Reference: 40AO-9ZZ17, Inadvertent PPS-ESFAS Actuations

Attachment C-5 CIAS Train A Page 1 of 2

Actuation Leg		Component	Handswitch	Actuated Condition	In Actuated Condition (Circle one)	As Left Condition (Circle one)
	2-4	Control System A from Recombiner Isolation Valve	HPA-HS-5	Closed	Y / N	Open / Closed
	2-4	Control System A Supply Isolation Valve	HPA-HS-1	Closed	Y / N	Open / Closed
	2-4	Control System A to Recombiner Isolation Valve	HPA-HS-3	Closed	Y / N	Open / Closed
	2-4	Make-Up Supply To Reactor Drain Tank Valve	CHA-HS-580	Closed	Y / N	Open / Closed
	2-4	Reactor Drain Tank Outlet Isolation Valve	CHA-HS-560	Closed	Y / N	Open / Closed
	2-4	Letdown to Regen Hx Isolation Valve	CHA-HS-516	Closed	Y / N	Open / Closed
	2-4	Chilled Water Return Header Outside Ctmt Isolation Valve	WCA-HS-62	Closed	Y / N	Open / Closed
	2-4	To Rad Monitor Outside Containment Isolation Valve	HCA-HS-45	Closed	Y / N	Open / Closed
	2-4	From Rad Monitor Outside Containment Isolation Valve	HCA-HS-46	Closed	Y / N	Open / Closed
	2-4	Containment Access Purge Upstream Isolation Valves	CPA-HS-4	Closed	Y / N	Open / Closed
	2-4	Nitrogen To SIT Isolation Valve	GAA-HS-1	Closed	Y / N	Open / Closed
	2-4	Nitrogen To Containment LP Header Isolation Valve	GAA-HS-2	Closed	Y / N	Open / Closed
	2-4	Hot Leg Sample Containment Isolation Valve	SSA-HS-203A	Closed	Y / N	Open / Closed
	2-4	Pressurizer Surge Line Sample Containment Isolation Valve	SSA-HS-204A	Closed	Y / N	Open / Closed
	2-4	Pressurizer Steam Space Sample Containment Isolation Valve	SSA-HS-205A	Closed	Y / N	Open / Closed
	2-4	Waste Gas Header Inside Containment Isolation Valve	GRA-HS-1	Closed	Y / N	Open / Closed

Technical Reference: 40AO-9ZZ17, Inadvertent PPS-ESFAS Actuations

Attachment C-7 CSAS Train A Page 1 of 1

Actuation Leg		Component	Handswitch	Actuated Condition	In Actuated Condition (Circle one)	As Left Condition (Circle one)
1-3		Diesel Generator A	DGA-HS-1	Running	Y / N	Run / Stop
1-3		Control Room Essential AHU Fan A	HJA-HS-28	Running	Y / N	Run / Stop
1-3		Essential Chiller / Chilled Water Pump A	ECA-HS-1A	Running	Y / N	Run / Stop
1-3		Essential Cooling Water Pump A	EWA-HS-1	Running	Y / N	Run / Stop
1-3		Essential Spray Pond Pump A	SPA-HS-1	Running	Y / N	Run / Stop
	2-4	Containment Spray A Discharge to Spray Header 1 Valve	SIA-HS-672	Open	Y / N	Open / Closed
1-3		HPSI Pump A	SIA-HS-1	Running	Y / N	Run / Stop
1-3		Containment Spray Pump A	SIA-HS-5	Running	Y / N	Run / Stop
1-3		LPSI Pump A	SIA-HS-3	Running	Y / N	Run / Stop
1-3		RCP Control Bleed-Off Header to VCT Isolation Valve	CHA-HS-506	Closed	Y / N	Open / Closed
1-3		NCW Containment Downstream Return Isolation Valve	NCA-HS-402	Closed	Y / N	Open / Closed
1-3		Instrument Air Outside Containment Isolation Valve	IAA-HS-2	Closed	Y / N	Open / Closed

Examination Outline Cross-reference:	Level	RO		SRO
	Tier #	2		
	Group #	1		
	K/A #	013 K4.13		
	Importance Rating	3.7		
K/A: Engineered Safety Features Actuation: Knowledge of ESFAS design feature(s) and/or interlock(s) which provide for the following: MFW isolation/reset				

Question 39

Given the following conditions:

- Unit 1 is in MODE 3, cooling down to MODE 5 for emergent maintenance
- The BOP depressed the LO SG PRESS SETPOINT RESET pushbutton on all four channels when both SG pressures were 1000 psia

If the crew fails to reset the low SG pressure setpoints again during the cooldown, MSIS will actuate AS SOON AS SG pressures lower to…

A. 560 psig

B. 600 psig

C. 760 psig

D. 800 psig

Answer: D

Explanation:

A. Plausible if thought that the setpoint reset lowers the setpoint from the current setpoint (960 psig) and if thought that the setpoint is lowered by 400 psig (which is true for the RCS pressure setpoint reset).
B. Plausible if thought that the setpoint reset lowers the setpoint 400 psig (which is true for the RCS pressure setpoint reset).
C. Plausible if thought that the setpoint reset lowers the setpoint from the current setpoint, however it lowers the setpoint 200 psig from the current SG pressure.
D. Correct.

Question Source:		**Bank**	
		Modified Bank	
	x	**New**	
		Previous NRC Exam	

Question Cognitive Level:		**Memory or Fundamental Knowledge**
	x	**Comprehension or Analysis**
	3	**Level of Difficulty**

10 CFR Part 55 Content:	**41.7**

Reference Provided:	**None**

Learning Objective:	Describe how the Reactor Protection System achieves its purpose

Technical Reference: Plant Protection System Tech Manual

Low Pressurizer Pressure Bypass Indicators

Three indicator lamps are provided. The white OFF lamp indicates no bypass. The amber PERMISSIVE lamp lights to indicate that RCS pressure is below 400 psia and bypass insertion is permissible. The red BYPASS lamp is lighted when a low pressurizer pressure bypass is in effect in that channel.

Low Pzr Press Setpoint Reset Push Button

This is a guarded, momentary action push button. Depressing and releasing the push button will decrease the low pressurizer pressure trip and pre-trip setpoints by one step (trip setpoint to 400 psia below existing RCS pressure). After a 10 second interval, depressing the PB again will cause a similar setpoint reduction. However, once a trip occurs, the setpoint cannot be reset until pressure again rises above the setpoint at which the trip occurred.

Hi Log Power Bypass Switch

This is a three position, spring loaded, return-to-center rotary switch. Moving the switch clockwise (CW) to the BYPASS position will initiate a high log power bypass in that channel if conditions allow (when power is above 10^{-4}% as indicated by the amber PERMISSIVE light). Moving the switch counterclockwise (CCW) to the OFF position will remove the bypass. The bypass will also be removed automatically when power drops below 10^{-4}%.

Hi Log Power Bypass Indicators

Three indicator lamps are provided. The white OFF lamp indicates no bypass. The amber PERMISSIVE lamp lights to indicate when power is above 10^{-4}% and bypass insertion is permissible. The red BYPASS lamp is lighted when a high log power bypass is in effect in that channel.

Low SG Pressure Reset Push Button

Depressing and releasing this guarded, momentary push button will decrease the SG-1 and SG-2 low pressure trip and pre-trip setpoints by one step (trip setpoint to 200 psia below existing SG pressure). As with the low pressurizer pressure setpoint reset push button, 10 seconds must elapse before additional setpoint reductions can be effected.

Examination Outline Cross-reference:	Level	RO		SRO
	Tier #	2		
	Group #	1		
	K/A #	022 A3.01		
	Importance Rating	4.1		
K/A: Containment Cooling: Ability to monitor automatic operation of the CCS, including: Initiation of safeguards mode of operation				

Question 40

When Containment pressure reaches a MINIMUM of ___(1)___ psig, Containment Cooling is being provided by Containment Spray, and Containment Spray flow will commence when the ___(2)___ .

A. (1) 3.0
(2) Containment Spray Pumps start

B. (1) 3.0
(2) Containment Spray Header Isolation Valves open

C. (1) 8.5
(2) Containment Spray Pumps start

D. (1) 8.5
(2) Containment Spray Header Isolation Valves open

Answer: D

Explanation:

A. First part is plausible since this is the pressure at which normal containment cooling stops and the CS pumps start, however safeguards containment cooling will not begin until 8.5 psia when the isolation valves open. Second part is plausible since the CS pumps start at a different pressure than the valves open, however the pumps start first, then the valves open.
B. First part is plausible since this is the pressure at which normal containment cooling stops and the CS pumps start, however safeguards containment cooling will not begin until 8.5 psia when the isolation valves open. Second part is correct.
C. First part is correct. Second part is plausible since the CS pumps start at a different pressure than the valves open, however the pumps start first, then the valves open.
D. Correct.

Question Source:		**Bank**	
		Modified Bank	
	x	**New**	
		Previous NRC Exam	

Question Cognitive Level:		**Memory or Fundamental Knowledge**
	x	**Comprehension or Analysis**
	2	**Level of Difficulty**

10 CFR Part 55 Content:	**41.7**

Reference Provided:	**None**

Learning Objective:	Describe the purpose and conditions under which the Containment Spray System is designed to function

Technical Reference: 40AO-9ZZ17, Inadvertent PPS-ESFAS Actuations

Attachment C-7 CSAS Train A Page 1 of 1

Actuation Leg		Component	Handswitch	Actuated Condition	In Actuated Condition (Circle one)	As Left Condition (Circle one)
1-3		Diesel Generator A	DGA-HS-1	Running	Y / N	Run / Stop
1-3		Control Room Essential AHU Fan A	HJA-HS-28	Running	Y / N	Run / Stop
1-3		Essential Chiller / Chilled Water Pump A	ECA-HS-1A	Running	Y / N	Run / Stop
1-3		Essential Cooling Water Pump A	EWA-HS-1	Running	Y / N	Run / Stop
1-3		Essential Spray Pond Pump A	SPA-HS-1	Running	Y / N	Run / Stop
	2-4	Containment Spray A Discharge to Spray Header 1 Valve	SIA-HS-672	Open	Y / N	Open / Closed
1-3		HPSI Pump A	SIA-HS-1	Running	Y / N	Run / Stop
1-3		Containment Spray Pump A	SIA-HS-5	Running	Y / N	Run / Stop
1-3		LPSI Pump A	SIA-HS-3	Running	Y / N	Run / Stop
1-3		RCP Control Bleed-Off Header to VCT Isolation Valve	CHA-HS-506	Closed	Y / N	Open / Closed
1-3		NCW Containment Downstream Return Isolation Valve	NCA-HS-402	Closed	Y / N	Open / Closed
1-3		Instrument Air Outside Containment Isolation Valve	IAA-HS-2	Closed	Y / N	Open / Closed

Technical Reference: 40AO-9ZZ17, Inadvertent PPS-ESFAS Actuations

Attachment C-13 SIAS Train A

Actuation Leg		Component	Handswitch	Actuated Condition	In Actuated Condition (Circle one)	As Left Condition (Circle one)
1-3		Control Room Normal AHU Isolation Dampers M01/M52	HJA-HS-7	Closed	Y / N	Open / Closed
1-3		Control Building Essential Isolation Dampers M36/M51/M62/M66	HJA-HS-58	Essential	Y / N	Essential / Normal
†		ESF Equipment Room Essential AHU Fan A	HJA-HS-133	Running	Y / N	Run / Stop
1-3		Auxiliary Building Pump Room Exhaust Isolation Damper M03	HAA-HS-112	Closed	Y / N	Open / Closed
1-3		Auxiliary Building Basement Pump Room Supply / Exhaust Isolation Dampers	HAA-HS-114	Closed	Y / N	Open / Closed
	2-4	Auxiliary Building Essential AFU A	HFA-HS-62	Running	Y / N	Run / Stop
	2-4	Fuel Building Essential AFU A	HFA-HS-64	Stopped	Y / N	Run / Stop
	2-4	Essential Chiller / Chilled Water Pump A	ECA-HS-1A	Running	Y / N	Run / Stop
	2-4	Essential Cooling Water Pump A	EWA-HS-1	Running	Y / N	Run / Stop
1-3		Cross-Tie Valve from NCW	EWA-HS-65	Closed	Y / N	Open / Closed
1-3		Cross-Tie Valve to NCW	EWA-HS-145	Closed	Y / N	Open / Closed
	2-4	Essential Spray Pond Pump A	SPA-HS-1	Running	Y / N	Run / Stop
1-3		LPSI Header A to RC Loop 1A Valve	SIA-HS-635	Open	Y / N	Open / Closed
1-3		LPSI Header A to RC Loop 1B Valve	SIA-HS-645	Open	Y / N	Open / Closed
1-3		HPSI Header A to RC Loop 1A Valve	SIA-HS-637	Open	Y / N	Open / Closed
1-3		HPSI Header A to RC Loop 1B Valve	SIA-HS-647	Open	Y / N	Open / Closed
1-3		HPSI Header A to RC Loop 2A Valve	SIA-HS-617	Open	Y / N	Open / Closed
1-3		HPSI Header A to RC Loop 2B Valve	SIA-HS-627	Open	Y / N	Open / Closed
	2-4	HPSI Pump A	SIA-HS-1	Running	Y / N	Run / Stop
	2-4	Containment Spray Pump A	SIA-HS-5	Running	Y / N	Run / Stop
	2-4	LPSI Pump A	SIA-HS-3	Running	Y / N	Run / Stop

Technical Reference: Plant Protection System Tech Manual

Containment Spray Actuation Signal (CSAS)

The CSAS will be initiated on an increasing (HI-HI) containment pressure of 8.5 psig. Since CSAS occurs at a higher containment pressure than the SIAS & CIAS actuations, both SIAS & CIAS should also be present during any containment spray actuation.

Pre-trip alarms are provided at 6.0 psig.

The CSAS actuates the containment spray systems in the event of a LOCA or MSLB.

The cool borated spray water removes heat from the containment atmosphere to limit and reduce post accident containment pressure.

Examination Outline Cross-reference:	Level	RO		SRO
	Tier #	2		
	Group #	1		
	K/A #	026 A2.03		
	Importance Rating	4.1		
K/A: Containment Spray: Ability to (a) predict the impacts of the following malfunctions or operations on the CSS; and (b) based on those predictions, use procedures to correct, control, or mitigate the consequences of those malfunctions or operations: Failure of ESF				

Question 41

Given the following conditions:

- Unit 1 is operating at 100% power
- An inadvertent Train ‘B’ CSAS has occurred
- The CRS has entered 40AO-9ZZ17, Inadvertent PPS-ESFAS Actuations

(1) Per 40AO-9ZZ17, the RO will secure the ‘B’ Containment Spray Pump by taking the ‘B’ CS Pump handswitch…

(2) If the CSAS setpoint is subsequently exceeded before the inadvertent CSAS has been reset, the MINIMUM action required by the RO to start the ‘B’ Containment Spray Pump is to take the ‘B’ CS Pump handswitch…

A. (1) directly to STOP
(2) to STOP, then to START

B. (1) directly to STOP
(2) to START, release the handswitch, and take it back to START

C. (1) to START, then to STOP
(2) to STOP, then to START

D. (1) to START, then to STOP
(2) to START, release the handswitch, and take it back to START

Answer: B

Explanation:

A. First part is correct. Second part is plausible since this is how the CS Pump would be restarted if the CS Pump breaker was disabled (taking the switch to stop resets the 86LO), however in this case the breaker is anti-pumped and therefore must be taken to start twice.
B. Correct.
C. First part is plausible since this is true if a SIAS has also occurred, however per ZZ17, a CSAS without a SIAS only requires taking the handswitch to STOP. Second part is plausible since this is how the CS Pump would be restarted if the CS Pump breaker was disabled (taking the switch to stop resets the 86LO), however in this case the breaker is anti-pumped and therefore must be taken to start twice.
D. First part is plausible since this is true if a SIAS has also occurred, however per ZZ17, a CSAS without a SIAS only requires taking the handswitch to STOP. Second part is correct.

Question Source:		**Bank**	
	x	**Modified Bank**	Modified from 2015 RO exam
		New	
		Previous NRC Exam	

Question Cognitive Level:		**Memory or Fundamental Knowledge**
	x	**Comprehension or Analysis**
	3	**Level of Difficulty**

10 CFR Part 55 Content:	**41.10**

Reference Provided:	**None**

Learning Objective:	Determine the plant impact of an inadvertent CSAS actuation and the actions needed to restore plant stability

Original Question:

5 MC Given the following conditions:

- Unit 1 operating at 100% power.
- Containment pressure is -0.1 psig.
- A train "B" CSAS has inadvertently actuated.

(1) Based on these conditions, the design negative pressure for Containment _____ be exceeded.

(2) To stop any operating Containment Spray pumps, the RO will _____.

A. (1) will
(2) override and stop the Containment Spray Pump

B. (1) will NOT
(2) override and stop the Containment Spray Pump

C. (1) will
(2) place the Containment Spray Pump hand switch in "STOP" to anti-pump the CS Pump.

D. (1) will NOT
(2) place the Containment Spray Pump hand switch in "STOP" to anti-pump the CS Pump.

Answer: D

Technical Reference: 40AO-9ZZ17, Inadvertent PPS-ESFAS Actuations

5.0 CSAS

INSTRUCTIONS	CONTINGENCY ACTIONS
____ 1. Enter AOP Entry Time and Date: _____	
____ 2. Record the time of the CSAS Actuation: _____	

---------- **NOTE** ----------

Overriding or anti-pumping equipment disables automatic operation of the equipment on a valid PPS-ESFAS actuation. Depending on plant conditions, this action may make the equipment inoperable.

____ 3. **IF BOTH** of the following:

- Any Containment Spray Pump is running
- The running Containment Spray Pump is **NOT** being used for SDC

THEN perform the following:

a. **IF** SIAS has **NOT** actuated, **THEN** place the Containment Spray Pump hand switch in "STOP" to anti-pump the CS Pump.

b. **IF** SIAS has actuated, **THEN** override and stop the Containment Spray Pump.

Technical Reference: 40AO-9ZZ17, Inadvertent PPS-ESFAS Actuations

5.0 CSAS

INSTRUCTIONS	CONTINGENCY ACTIONS
____ 13. **IF** Steam Generator Blowdown is isolated, **THEN** perform the following: a. Inform Chemistry that Blowdown is isolated. b. PERFORM 40OP-9SG03, Operating The Steam Generator Blowdown System, to restore Blowdown.	
____ 14. **IF** a CS Pump needs to be started, **THEN** perform the following: a. **IF** SIAS has **NOT** actuated, **THEN** perform the following: 1) Inform an operator that the CS Pump breaker will close upon restoration of control power. 2) Direct the operator to cycle control power to the CS Pump breaker(s). b. **IF** SIAS actuated while the CS Pumps were stopped, **THEN** perform the following: 1) Place the CS Pump handswitch to "START" and release the switch. 2) Place the CS Pump handswitch to "START".	

Examination Outline Cross-reference:	Level	RO		SRO
	Tier #	2		
	Group #	1		
	K/A #	039 K5.08		
	Importance Rating	3.6		
K/A: Main and Reheat Steam: Knowledge of the operational implications of the following concepts as they apply to the MRSS: Effect of steam removal on reactivity				

Question 42

Given the following conditions:

- Unit 2 is operating at 100% power

Subsequently:

- The 6A Feedwater Heater Normal Level Control Valve has failed closed
- The 6A Feedwater Heater High Level Control Valve is seized closed

With NO operator action, Reactor power will change due to…

A. a decrease in feedwater heating

B. an increase in steam being sent to the Main Turbine

C. an increase in feedwater heating

D. a decrease in steam being sent to the Main Turbine

Answer: A

Explanation:

A. Correct.
B. Plausible since the failures in the stem would result in the extraction steam valve to the 6A heater closing, thus diverting steam to the low pressure turbine, however this will not impact reactor power since the steam leaving the SGs will be unaffected.
C. Plausible since hot water in the 6A heater can no longer be rejected to the condenser (due to the normal level control valve failing closed) which would potentially increase the amount of hot water available to be sent to the SG, however the 6A heater will have steam isolated to it resulting in a lower temperature and a net decrease in feedwater heating.
D. Plausible since the isolation of extraction steam to the 6A heater will result in a lower feedwater temperature, which could cause more extraction steam to be aligned to other heaters to compensate for the reduction in feedwater heating (and thus taking steam which could have gone to the main turbine), however when the extraction steam to the 6A heater is stopped, the steam is diverted to the low pressure turbine.

Question Source:		**Bank**	
		Modified Bank	
	x	**New**	
		Previous NRC Exam	

Question Cognitive Level:		**Memory or Fundamental Knowledge**
	x	**Comprehension or Analysis**
	3	**Level of Difficulty**

10 CFR Part 55 Content:	**41.14**

Reference Provided:	**None**

Learning Objective:	Explain the operation of the HP Feedwater Heaters under normal operating conditions

Technical Reference: ICES Report #415578 (Palo Verde Unit 2 – May 2017)

Event Summary:
On 05/30/2017 at 1336, the Unit 2 Control Room received a HI-HI level alarm for high pressure feedwater heater 7B. The high level condition in the feedwater heater resulted in extraction steam and drains to the feedwater heater being automatically isolated. As a result, the temperature of the feedwater supplied to the steam generators decreased from 451 degrees to 430 degrees Fahrenheit. The lower feedwater temperature resulted in a reactor power increase to 101.13%. The Control Room operators took prompt action to reduce turbine load and at 1345 stabilized reactor power at 97.5%. Additionally, Group 5 Control Element Assemblies (CEAs) automatically inserted approximately six steps in response to this transient. Repairs were completed at approximately 2030 and Operations commenced increasing reactor power at approximately 2300. On 5/31/2017 at 12:09 AM reactor power was restored to 100%.

Upon investigation, the instrument air supply line to feedwater heater 7B normal level control valve was found disconnected from the valve actuator, causing the valve to fail closed. Also, the valve controller for the high level control valve failed to operate properly,

which caused the valve to stay closed even though actual feedwater heater level was high. The normal and high level control valves maintain thermal efficiency and heater life and their proper operation are important for maintaining feed water temperature and reactivity control.

Examination Outline Cross-reference:	Level	RO		SRO
	Tier #	2		
	Group #	1		
	K/A #	059 K3.02		
	Importance Rating	3.6		
K/A: Main Feedwater: Knowledge of the effect that a loss or malfunction of the MFW will have on the following: AFW system				

Question 43

Given the following condition:

- Unit 1 tripped from 100% power due to a complete loss of Main Feedwater

With NO operator action, AFAS should actuate when SG level lowers to ___(1)___ and Aux Feed Pumps ___(2)___ should receive an auto start signal.

A. (1) 20.3% WR
(2) AFA-P01 and AFB-P01 ONLY

B. (1) 20.3% WR
(2) AFA-P01, AFB-P01, and AFN-P01

C. (1) 25.8% WR
(2) AFA-P01 and AFB-P01 ONLY

D. (1) 25.8% WR
(2) AFA-P01, AFB-P01, and AFN-P01

Answer: C

Explanation:

A. First part is plausible since 20.3% WR is the setpoint for a DAFAS signal, however AFAS actuates at 25.8% WR. Second part is correct.
B. First part is plausible since 20.3% WR is the setpoint for a DAFAS signal, however AFAS actuates at 25.8% WR. Second part is plausible since all 3 AFW Pumps are powered from class power, however AFN-P01 does not receive an auto start signal on an AFAS.
C. Correct.
D. First part is correct. Second part is plausible since all 3 AFW Pumps are powered from class power, however AFN-P01 does not receive an auto start signal on an AFAS.

Question Source:		**Bank**	
	x	**Modified Bank**	Modified from 2013 RO Exam
		New	
		Previous NRC Exam	

Question Cognitive Level:	**x**	**Memory or Fundamental Knowledge**
		Comprehension or Analysis
	3	**Level of Difficulty**

10 CFR Part 55 Content:	**41.8**

Reference Provided:	**None**

Learning Objective:	Describe the system response to an Auxiliary Feedwater System Signal

Original Question:

4 MC Given the following conditions:

? Unit 1 was operating at 100% power
? ALL Main Feedwater is lost.

The Auxiliary Feedwater System will initiate feeding the SGs at __(1)__ WR level and terminate AFW flow at __(2)__.

A. (1) 20.3 (2) 40.8% WR level.

B. (1) 20.3 (2) 44.3% WR level.

C. (1) 25.8 (2) 40.8% WR level.

D. (1) 25.8 (2) 44.3% WR level.

Answer: C

Technical Reference: Plant Protection System Tech Manual

- Main steam (SG)

Each steam generator provides two water level signals to the PPS to be used as RPS and ESFAS bistable inputs. The SG wide range (WR) signals are used for the low steam generator water level reactor trip (44.2%) and auxiliary feedwater actuation system (AFAS) actuations (25.8%). The SG narrow range (NR) signals are used for the high steam generator water level reactor trip and main steam isolation system (MSIS) actuations.

Pressure signals from each SG are also provided as inputs. These signals are used for the low steam generator pressure reactor trip, main steam isolation system (MSIS) actuations and ruptured SG lockout (high delta P) in the auxiliary feedwater actuation system.

Technical Reference:

and open the CEDMCS motor generator output contactor at a pressurizer pressure of 2409 psia. reference should be made to the PPS training document for additional information on SPS and DAFAS circuitry.

A DAFAS actuation will occur when the following conditions exist:

- SPS actuation on high pressurizer pressure
- S/G level of 20.3% WR on 2 of 4 class level instruments
- No AFAS present
- No MSIS present

When a DAFAS signal is actuated, the AFW system automatically responds to feed the S/Gs to maintain level between 40.8% and 20.3% by cycling isolation and flow control valves as discussed above for AFAS actuation.

Technical Reference: 40AO-9ZZ17, Inadvertent PPS-ESFAS Actuations

Attachment C-1 AFAS-1 Train A Page 1 of 1

Actuation Leg		Component	Handswitch	Actuated Condition	In Actuated Condition (Circle one)	As Left Condition (Circle one)
	2-4	Diesel Generator A	DGA-HS-1	Start	Y / N	Start / Stop
	2-4	Ess. Chiller/Chilled Water Pump A	ECA-HS-1A	Running	Y / N	Run / Stop
	2-4	Essential Cooling Water Pump A	EWA-HS-1	Running	Y / N	Run / Stop
	2-4	Essential Spray Pond Pump A	SPA-HS-1	Running	Y / N	Run / Stop
1-3		AFW to SG-1 Downstream Vlv	AFC-HS-36A	Open	Y / N	Open / Closed
†		AFW to SG-1 Upstream Vlv	AFA-HS-32A	Open	Y / N	Open / Closed
	2-4	SG 1 Steam Supply to Pump	SGA-HS-134A	Open	Y / N	Open / Closed
	2-4	SG 2 Steam Supply to Pump	SGA-HS-138A	Open	Y / N	Open / Closed
1-3		SG 1 Common Upstream Isol Vlv	SGA-HS-500P	Closed	Y / N	Open / Closed
1-3		SG 2 Common Downstream Isol Vlv	SGA-HS-500S	Closed	Y / N	Open / Closed
1-3		SG 1 Downcomer Blowdown Upstream Vlv	SGA-HS-220	Closed	Y / N	Open / Closed
1-3		SG 1 Cold Leg Blowdown Upstream Vlv	SGA-HS-211	Closed	Y / N	Open / Closed
1-3		SG 1 Hot Leg Blowdown Upstream Vlv	SGA-HS-204	Closed	Y / N	Open / Closed
1-3		SG 2 Downcomer Blowdown Downstream Vlv	SGA-HS-227	Closed	Y / N	Open / Closed
1-3		SG 2 Hot Leg Blowdown Downstream Vlv	SGA-HS-225	Closed	Y / N	Open / Closed
1-3		SG 2 Cold Leg Blowdown Downstream Vlv	SGA-HS-223	Closed	Y / N	Open / Closed

Technical Reference: 40AO-9ZZ17, Inadvertent PPS-ESFAS Actuations

Attachment C-4 AFAS-2 Train B Page 1 of 1

Actuation Leg		Component	Handswitch	Actuated Condition	In Actuated Condition (Circle one)	As Left Condition (Circle one)
	2-4	Diesel Generator B	DGB-HS-2	Start	Y / N	Start / Stop
	2-4	Essential Chiller/Chilled Water Pump B	ECB-HS-2A	Running	Y / N	Run / Stop
	2-4	Essential Cooling Water Pump B	EWB-HS-2	Running	Y / N	Run / Stop
	2-4	Essential Spray Pond Pump B	SPB-HS-2	Running	Y / N	Run / Stop
†		AFW to SG 2 Downstream Vlv	AFB-HS-35A	Open	Y / N	Open / Closed
1-3		AFW to SG 2 Upstream Vlv	AFB-HS-31A	Open	Y / N	Open / Closed
	2-4	Essential Electric Aux Feed Pump	AFB-HS-10	Running	Y / N	Run / Stop
1-3		SG 1 Common Downstream Isol Vlv	SGB-HS-500Q	Closed	Y / N	Open / Closed
1-3		SG 2 Common Upstream Isol Vlv	SGB-HS-500R	Closed	Y / N	Open / Closed
1-3		SG 1 Downcomer Blowdown Downstream Vlv	SGB-HS-221	Closed	Y / N	Open / Closed
1-3		SG 1 Cold Leg Blowdown Downstream Vlv	SGB-HS-228	Closed	Y / N	Open / Closed
1-3		SG 1 Hot Leg Blowdown Downstream Vlv	SGB-HS-219	Closed	Y / N	Open / Closed
1-3		SG 2 Downcomer Blowdown Upstream Vlv	SGB-HS-226	Closed	Y / N	Open / Closed
1-3		SG 2 Hot Leg Blowdown Upstream Vlv	SGB-HS-224	Closed	Y / N	Open / Closed
1-3		SG 2 Cold Leg Blowdown Upstream Vlv	SGB-HS-222	Closed	Y / N	Open / Closed

Examination Outline Cross-reference:	Level	RO		SRO
	Tier #	2		
	Group #	1		
	K/A #	061 K2.01		
	Importance Rating	3.2		
K/A: Auxiliary/Emergency Feedwater: Knowledge of bus power supplies to the following: AFW system MOVs				

Question 44

AFW Regulating Valve from AFA-P01 to SG1, AFA-HV-32, is powered from ___(1)___ and AFW Regulating Valve from AFB-P01 to SG1, AFB-UV-30, is powered from ___(2)___ .

A. (1) Class 125 VDC power
(2) Class 125 VDC power

B. (1) Class 125 VDC power
(2) Class 480 VAC power

C. (1) Class 480 VAC power
(2) Class 125 VDC power

D. (1) Class 480 VAC power
(2) Class 480 VAC power

Answer: B

Explanation:

A. First part is correct. Second part is plausible as some AF MOVs are DC powered, however the Train B AFW MOVs are 480 VAC powered.
B. Correct.
C. First part is plausible as some AF MOVs are AC powered, however the Train A AFW MOVs are 125VDC powered. Second part is plausible as some AF MOVs are DC powered, however the Train B AFW MOVs are 480 VAC powered.
D. First part is plausible as some AF MOVs are AC powered, however the Train A AFW MOVs are 125VDC powered. Second part is correct.

Question Source:		**Bank**	
		Modified Bank	
	x	**New**	
		Previous NRC Exam	

Question Cognitive Level:	**x**	**Memory or Fundamental Knowledge**
		Comprehension or Analysis
	3	**Level of Difficulty**

10 CFR Part 55 Content:	**41.8**

Reference Provided:	**None**

Learning Objective:	Describe how the AF system is supported by the following systems: Electrical Distribution

Technical Reference: Aux Feedwater System Tech Manual

PKA-M41 is 125 VDC class power, PHB-M34 is 480 VAC class AC power

Table C - 1
AF System Electrical Power Supplies

COMPONENT	POWER SUPPLY
Aux. Feedwater Pump B	PBB-S04S
MOV POSIT Indicators at Aux Relay Cab ZAA-C01 (AFC-UV-32 Psn Indication)	PNA-D2517
MOV POSIT Ind at Aux Relay Cab ZAA-C01 (AFA-UV-33 Psn Indication)	PNA-D2519
BOP Analog Inst Cabinet & Indicators ZJA-C02A & B (Aux FW to SG1 AF FI-40)	PNA-D2524
Distribution Panel PKA-4121	PKA-M4121
Auxiliary Feedwater Turbine Gov Control	PKA-D2118
Auxiliary Feedwater Reg Valve AFA-HV-32	PKA-M4112
Auxiliary Feedwater Isolation Valve AFA-UV-37	PKA-M4113
Auxiliary Feedwater Turbine Trip & Throttle Valve AFA-HV-54	PKA-M4114
BOP Analog Instr Cabinet & Indicators ZJB-C02A (Aux FW to SG2 AF FI-41)	PNB-D2624
Auxiliary Feedwater Isolation Valve AFC-UV-36	PKC-M4314
Auxiliary Feedwater Reg Valve AFC-UV-33	PKC-M4315
Aux Feedwater Reg Valve Pump B to SG1 AFB-UV-30	PHB-M3420

Examination Outline Cross-reference:	Level	RO		SRO
	Tier #	2		
	Group #	1		
	K/A #	062 K2.01		
	Importance Rating	3.3		
K/A: AC Electrical Distribution: Knowledge of bus power supplies to the following: Major system loads				

Question 45

Which of the following loads are powered from 4.16 kV Bus NBN-S01?

1. Circulating Water Pump A, CWN-P01A
2. Heater Drain Tank Pump A, EDN-P01A
3. Nuclear Cooling Water Pump A, NCN-P01A

A. 1 and 2

B. 1 and 3

C. 2 ONLY

D. 3 ONLY

Answer: D

Explanation:

A. Circ Water Pump A is plausible since it is powered from an S01 bus, however it is powered from NAN-S01. Heater Drain Tank Pump A is plausible since most non-class A pumps are powered from an S01 bus, however Heater Drain Tank Pump A is powered from NBN-S02.
B. Circ Water Pump A is plausible since it is powered from an S01 bus, however it is powered from NAN-S01. Nuclear Cooling Water Pump A is correct.
C. Heater Drain Tank Pump A is plausible since most non-class A pumps are powered from an S01 bus, however Heater Drain Tank Pump A is powered from NBN-S02.
D. Correct.

Question Source:		**Bank**	
		Modified Bank	
	x	**New**	
		Previous NRC Exam	

Question Cognitive Level:	**x**	**Memory or Fundamental Knowledge**
		Comprehension or Analysis
	3	**Level of Difficulty**

10 CFR Part 55 Content:	**41.4**

Reference Provided:	**None**

Learning Objective:	Describe the circuit paths of Non-Class Electrical Distribution systems

Technical Reference: 40AO-9ZZ12, Degraded Electrical Power

NBN-S01 Loads

(Bold T.S. numbers indicate less than 2 hour action requirements)

Equipment	Alt Equip	Power	TS / TRM Reference
NBN-S02 (Alternate Supply)	None		• **LCO 3.8.1 (Mode 1 - 4)** • **LCO 3.8.2 (Mode 5 & 6 during movement of irradiated fuel)**
WCN-E01B, Normal Chiller E01B	WCN-E01C WCN-E02	NBN-S02G NBN-S02F	None
NCN-P01A, Nuclear Cooling Water Pump A	NCN-P01B	NBN-S02K	
TCN-P01A, Turbine Cooling Water Pump A	TCN-P01B	NBN-S02J	
PWN-P01A, Plant Cooling Water Pump A	PWN-P01B	NBN-S02H	
EDN-P01B, Heater Drain Tank Pump B	EDN-P01A	NBN-S02E	
CDN-P01A, Condensate Pump A	CDN-P01C	NBN-S02D	
CDN-P01B, Condensate Pump B	CDN-P01C	NBN-S02D	

Supply Breaker: NAN-S01N

Location: Turbine Building 100' Non-Class Switchgear Room

Drawing: E-NBA-001

Examination Outline Cross-reference:	Level	RO		SRO
	Tier #	2		
	Group #	1		
	K/A #	063 G 2.4.6		
	Importance Rating	4.0		
K/A: DC Electrical Distribution: Knowledge of abnormal condition procedures				

Question 46

Given the following conditions:

- Unit 1 is operating at 100% power
- The ‘A’ EDG is running and paralleled to offsite power

Subsequently:

- A loss of PKA-M41 occurs

The CRS should enter ___(1)___ and direct the crew to ___(2)___ .

A. (1) 40AO-9ZZ12, Degraded Electrical Power
(2) emergency stop the ‘A’ EDG

B. (1) 40AO-9ZZ12, Degraded Electrical Power
(2) locally open the ‘A’ EDG output breaker

C. (1) 40AO-9ZZ13, Loss of Class Instrument or Control Power
(2) emergency stop the ‘A’ EDG

D. (1) 40AO-9ZZ13, Loss of Class Instrument or Control Power
(2) locally open the ‘A’ EDG output breaker

Answer: D

Explanation:

A. First part is plausible since losses of electrical buses are mitigated by 9ZZ12, however a loss of the DC bus is mitigated by 9ZZ13. Second part is plausible a loss of PKA-M41 will result in a loss of EDG 'A' Controls and could result in motorizing the EDG while paralleled with offsite power, however the procedurally directed action is to open the output breaker instead of emergency stopping the EDG.
B. First part is plausible since losses of electrical buses are mitigated by 9ZZ12, however a loss of the DC bus is mitigated by 9ZZ13. Second part is correct.
C. First part is correct. Second part is plausible a loss of PKA-M41 will result in a loss of EDG 'A' Controls and could result in motorizing the EDG while paralleled with offsite power, however the procedurally directed action is to open the output breaker instead of emergency stopping the EDG.
D. Correct.

Question Source:	**x**	**Bank**	(Modified from a 4x4 to a 2x2 but is essentially a bank question)
		Modified Bank	
		New	
	x	**Previous NRC Exam**	2010 SRO Exam

Question Cognitive Level:	**x**	**Memory or Fundamental Knowledge**
		Comprehension or Analysis
	2	**Level of Difficulty**

10 CFR Part 55 Content:	**41.10**

Reference Provided:	**None**

Learning Objective:	Describe how a loss of its associated 125 VDC control power impacts EDG operation, including operator action required to mitigate this impact

Original Question:

Questions

1 **MC** Given the following conditions:

Initial Conditions:

- Unit 1 is operating at 100% power.
- EDG 'A' is running with its output breaker (PBA-S03B) closed.
- EDG 'A' is carrying 5000 KW of load paralleled to offsite power.

Subsequently:

- A loss of PKA-M41 occurs.

Which ONE of the following describes the actions to be taken?

A. Emergency Stop EDG 'A' per 40OP-9DG01(EDG 'A').

B. Open PBA-S03B from the Control Room per 40AO-9ZZ12 (Degraded Electrical).

C. Open PBA-S03B locally per 40AO-9ZZ13 (Loss of Class Instrument or Control Power).

D. Restore PKA-M41 from alternate supply per 40OP-9PK01(125 VDC Class 1E Electrical System)

Answer: C

Technical Reference: 40AO-9ZZ12, Degraded Electrical Power

PALO VERDE NUCLEAR GENERATING STATION	40AO-9ZZ12 Revision 72
DEGRADED ELECTRICAL POWER	Page 1 of 413

This procedure provides guidance for the following conditions:

- Loss of power to any 480V or higher bus that does not cause a Loss of Offsite Power, or a Blackout requiring entry into the EOPs. [Ref: Step 11]
- Any bus(es) de-energized during performance of or remaining de-energized following exit from the EOPs.

Technical Reference: 40AO-9ZZ13, Loss of Class Instrument or Control Power

PALO VERDE NUCLEAR GENERATING STATION

LOSS OF CLASS INSTRUMENT OR CONTROL POWER

40AO-9ZZ13 Revision 30
Page 3 of 184

1.0 ENTRY CONDITIONS

The Loss of Class Instrument or Control Power procedure may be entered when **ANY** of the following conditions exist:

SECTION 3.0, LOSS OF PKA-M41 OR PKA-D21

Technical Reference: 40AO-9ZZ13, Loss of Class Instrument or Control Power

3.0 LOSS OF PKA-M41 OR PKA-D21

INSTRUCTIONS	CONTINGENCY ACTIONS
____ 1. Enter AOP Entry Time and Date: _____	
___ 2. **IF** DG A was paralleled with offsite power when this event occurred, **THEN** direct an operator to locally open PBA-S03B, DG A Output Breaker.	

Examination Outline Cross-reference:	Level	RO		SRO
	Tier #	2		
	Group #	1		
	K/A #	063 A3.01		
	Importance Rating	2.7		
K/A: DC Electrical Distribution: Ability to monitor automatic operation of the DC electrical system, including: Meters, annunciators, dials, recorders, and indicating lights				

Question 47

Given the following conditions:

- Unit 1 is operating at 100% power
- 125 VDC Bus PKC-M43 is being powered from the ‘C’ Battery Charger

In this lineup, voltage on PKC-M43 should be ~ ___(1)___ and ‘C’ Battery Charger current should be ___(2)___ ‘C’ Battery current.

A. (1) 125 VDC
(2) equal to

B. (1) 125 VDC
(2) greater than

C. (1) 135 VDC
(2) equal to

D. (1) 135 VDC
(2) greater than

Answer: D

Explanation:

A. First part is plausible since the bus is literally a 125 VDC Bus, however the nominal voltage on this bus is 135 VDC (bus voltage limit is 129.0 to 139.8 VDC with a desired value of 135.0 VDC). Second part is plausible since the battery is maintained on a float charge during normal operations, and the battery charger is supplying the current to maintain a float charge in addition to the loads on PKC, therefore charger current will be higher than battery current..
B. First part is plausible since the bus is literally a 125 VDC Bus, however the nominal voltage on this bus is 135 VDC (bus voltage limit is 129.0 to 139.8 VDC with a desired value of 135.0 VDC). Second part is correct.
C. First part is correct. Second part is plausible since the battery is maintained on a float charge during normal operations, and the battery charger is supplying the current to maintain a float charge in addition to the loads on PKC, therefore charger current will be higher than battery current.
D. Correct.

Question Source:		**Bank**	
		Modified Bank	
	x	**New**	
		Previous NRC Exam	

Question Cognitive Level:		**Memory or Fundamental Knowledge**
	x	**Comprehension or Analysis**
	3	**Level of Difficulty**

10 CFR Part 55 Content:	**41.7**

Reference Provided:	**None**

Learning Objective:	Explain the operation of the Class 125 VDC Batteries and Battery Chargers under normal operating conditions

Technical Reference: 40OP-9PK01, 125 VDC Class 1E Electrical System

3.0 PRECAUTIONS AND LIMITATIONS

3.1 Precautions

3.1.1 Failure to provide ventilation to the Battery Rooms could allow the development of an explosive atmosphere due to hydrogen concentrations.

3.1.2 Operation of two class 1E battery chargers in parallel could cause damage to the 125 VDC Class 1E Electrical system.

3.2 Limitations

3.2.1 Bus voltage limits are 129.0 VDC to 139.8 VDC with the desired value of approximately 135.0 VDC.

3.2.2 Battery float voltage is normally between 130.2 VDC and 135.0 VDC with a desired value of approximately 135.0 VDC.

Technical Reference: PVNGS Operator Information Manual

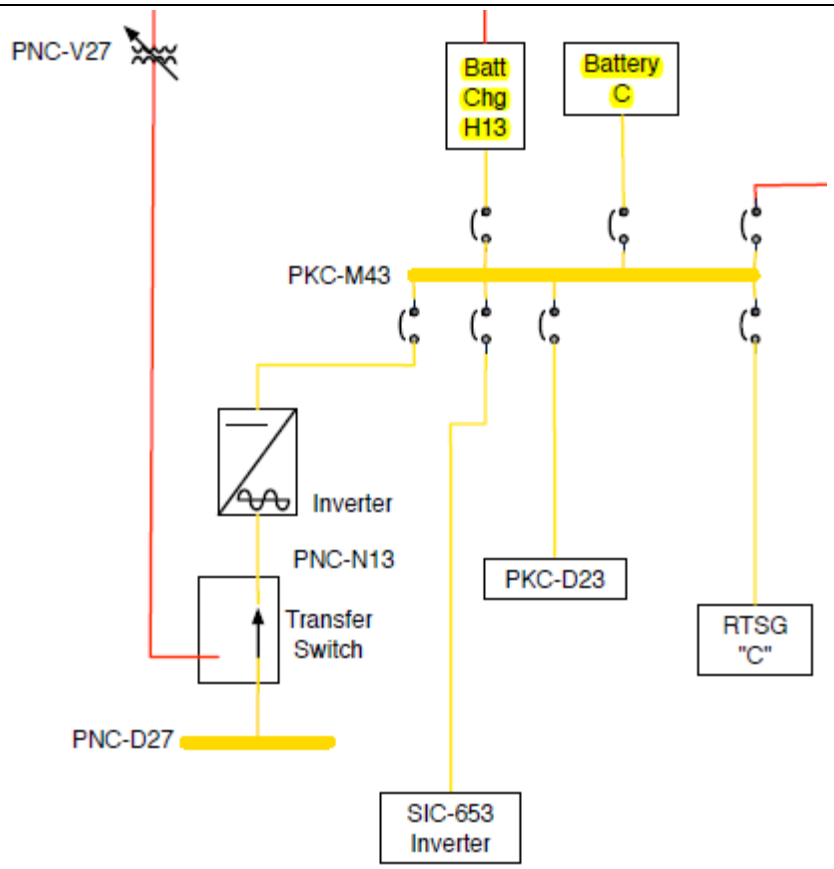

Examination Outline Cross-reference:	Level	RO		SRO
	Tier #	2		
	Group #	1		
	K/A #	064 K2.02		
	Importance Rating	2.8		
K/A: Emergency Diesel Generator: Knowledge of bus power supplies to the following: Fuel oil pumps				

Question 48

What is the power supply for the ‘A’ EDG Fuel Oil Transfer Pump?

A. PHA-M31

B. PGA-L31

C. PKA-D21

D. PKA-M41

Answer: A

Explanation:

A. Correct.
B. Plausible since PGA-L31 supplies power to the 'A' EDG Room Essential Exhaust Fan, however the Fuel Oil Transfer Pump is powered from PHA-M31.
C. Plausible that the Fuel Oil Pump would be a DC powered pump to ensure the pump can be powered in the event of a loss of all AC, however the Fuel Oil Transfer Pump is powered by PHA-M31.
D. Plausible that the Fuel Oil Pump would be a DC powered pump to ensure the pump can be powered in the event of a loss of all AC, however the Fuel Oil Transfer Pump is powered by PHA-M31.

Question Source:		**Bank**	
		Modified Bank	
	x	**New**	
		Previous NRC Exam	

Question Cognitive Level:	**x**	**Memory or Fundamental Knowledge**
		Comprehension or Analysis
	2	**Level of Difficulty**

10 CFR Part 55 Content:	**41.8**

Reference Provided:	**None**

Learning Objective:	Explain the operation of the Diesel Fuel Oil System under normal operating conditions

Technical Reference: EDG Tech Manual

Diesel Generator / Diesel Fuel Oil System (DG/DF)

APPENDIX C: Electrical Power Supplies

Table C - 1
DG/DF System Electrical Power Supplies

COMPONENT	POWER SUPPLY
Diesel Fuel Oil Transfer Pump A	PHA-M3114

Examination Outline Cross-reference:	Level	RO		SRO
	Tier #	2		
	Group #	1		
	K/A #	073 A1.01		
	Importance Rating	3.2		
K/A: Process Radiation Monitoring: Ability to predict and/or monitor changes in parameters (to prevent exceeding design limits) associated with operating the PRM system controls including: Radiation levels				

Question 49

Which of the following Process Radiation Monitors should automatically actuate an ESFAS signal due to high radiation levels?

1. RU-139, Main Steam Line Monitor
2. RU-29, Control Room Ventilation Intake Monitor
3. RU-34, Containment Building Refueling Purge Exhaust Monitor

A. 1 and 2

B. 1 and 3

C. 2 ONLY

D. 3 ONLY

Answer: C

Explanation:

A. RU-139 is plausible if thought that radiation in the main steam lines would actuate an MSIS in order to stop the release of radiation into the steam plant, however RU-139 does not actuate any ESFAS signals. RU-29 is correct.
B. RU-139 is plausible if thought that radiation in the main steam lines would actuate an MSIS in order to stop the release of radiation into the steam plant, however RU-139 does not actuate any ESFAS signals. RU-34 is plausible since CPIAS is actuated on a high rad signal to a purge RM, however the RM which actuates a CPIAS is RU-37, Power Access Purge Area Monitor.
C. Correct.
D. RU-34 is plausible since CPIAS is actuated on a high rad signal to a purge RM, however the RM which actuates a CPIAS is RU-37, Power Access Purge Area Monitor.

Question Source:		**Bank**	
		Modified Bank	
	x	**New**	
		Previous NRC Exam	

Question Cognitive Level:	**x**	**Memory or Fundamental Knowledge**
		Comprehension or Analysis
	3	**Level of Difficulty**

10 CFR Part 55 Content:	**41.11**

Reference Provided:	**None**

Learning Objective:	Describe how BOP ESFAS is supported by the following systems: Radiation Monitors

Technical Reference: Radiation Monitoring System Tech Manual

2.27 Control Room Ventilation Intake Monitors, (CRVA) SQA-RU-29 and (CRVB) SQB-RU-30

These radiation monitors monitor the noble gas concentrations in the control room air intake. The primary function of these monitors is to provide engineered safety feature actuation on high-high alarm activating the control room essential filtration units (CREFAS). These monitors are redundant with their sample points as near the intake as practical (see drawing 13-M-HJP-001).

Technical specifications apply. Required monitor features for operability are the gas channel, sample pump, low sample flow detection, associated ESF actuation capability, and control room indication and alarm.

Technical Reference: Radiation Monitoring System Tech Manual

2.30 Containment Building Refueling Purge Exhaust Monitor, (CBPB) SQB-RU-34

The CBPB radiation monitor continuously monitors noble gas radioactivity levels in the containment building purge exhaust. The primary function of this monitor is to provide a high activity alarm associated with abnormal radioactivity levels in the purge exhaust. Although this monitor is included as part of the SRMS, it is not required to meet IE qualification requirements as described in IEEE standard 323-1974 as it has no safety function. The monitor is equipped with a RIC module to provide monitor control and indication in the event of DCU failure. The RIC is mounted in the SRMS panel in the control room with the balance of the safety related monitor RIC units. Because it does not meet the separation requirements from the qualified RIC units, the CBB RIC must meet the requirements for "associated equipment" in accordance with IEEE standard 384-1977 (see drawing 13-M-CPP-001).

The actual engineered safety feature actuation function of isolating the containment purge exhaust (CPIAS initiation) is provided by the power access purge area monitors (PAPA and PAPB) SQA-RU-37 and SQB-RU-38.

This monitor has no operability requirements per the technical specifications and the actual effluent radiation monitor is the plant vent monitor.

Technical Reference: Radiation Monitoring System Tech Manual

2.34 Main Steam Line Monitors, SQN-RU-139 and RU-140

These PAMS monitors consist of ionization chambers located as close as practical to each of the four main steam lines upstream of the atmospheric dump valves and main steam reliefs in the main steam support structure. The purpose of these monitors is to assess releases through main steam reliefs or atmospheric dump valves under post accident conditions. These monitors meet the requirements of NUREG-0737 and regulatory guide 1.97, Rev 2 for post accident monitors (see drawing 13-J-ZMF-002).

Technical specifications apply. Required monitor features for operability are the ionization chambers themselves and control room indication and annunciation.

Examination Outline Cross-reference:	Level	RO		SRO
	Tier #	2		
	Group #	1		
	K/A #	073 A2.01		
	Importance Rating	2.5		
K/A: Process Radiation Monitoring: Ability to (a) predict the impacts of the following malfunctions or operations on the PRM system; and (b) based on those predictions, use procedures to correct, control, or mitigate the consequences of those malfunctions or operations: Erratic or failed power supply				

Question 50

Given the following conditions:

- Unit 1 is operating at 100% power
- Train ‘A’ Control Room Ventilation Radiation Monitor, RU-29, has just failed off-scale high due to a short in the power supply

This failure will result in a ___(1)___ and the crew will mitigate the event using ___(2)___ .

A. (1) ‘A’ CREFAS ONLY
(2) B05 Alarm Response Procedure

B. (1) ‘A’ CREFAS ONLY
(2) 40AO-9ZZ17, Inadvertent PPS-ESFAS Actuations

C. (1) ‘A’ and ‘B’ CREFAS
(2) B05 Alarm Response Procedure

D. (1) ‘A’ and ‘B’ CREFAS
(2) 40AO-9ZZ17, Inadvertent PPS-ESFAS Actuations

Answer: C

Explanation:

A. First part is plausible since only the Train 'A' RM failed high, however on an actuation of Train 'A' CREFAS, a cross trip signal will also actuate Train 'B' CREFAS. Second part is correct.
B. First part is plausible since only the Train 'A' RM failed high, however on an actuation of Train 'A' CREFAS, a cross trip signal will also actuate Train 'B' CREFAS. Second part is plausible since CREFAS will actuate and was actuated on a "false positive" high radiation signal, however CREFAS actuations are handled using the B05 Alarm Response Procedures.
C. Correct.
D. First part is correct. Second part is plausible since CREFAS will actuate and was actuated on a "false positive" high radiation signal, however CREFAS actuations are handled using the B05 Alarm Response Procedures.

Question Source:		**Bank**	
		Modified Bank	
	x	**New**	
		Previous NRC Exam	

Question Cognitive Level:		**Memory or Fundamental Knowledge**
	x	**Comprehension or Analysis**
	3	**Level of Difficulty**

10 CFR Part 55 Content:	**41.11**

Reference Provided:	**None**

Learning Objective:	Describe the BOP ESFAS circuit paths to include inputs and outputs

Technical Reference: Radiation Monitoring Tech Manual

2.27 Control Room Ventilation Intake Monitors, (CRVA) SQA-RU-29 and (CRVB) SQB-RU-30

These radiation monitors monitor the noble gas concentrations in the control room air intake. The primary function of these monitors is to provide engineered safety feature actuation on high-high alarm activating the control room essential filtration units (CREFAS). These monitors are redundant with their sample points as near the intake as practical (see drawing 13-M-HJP-001).

Technical specifications apply. Required monitor features for operability are the gas channel, sample pump, low sample flow detection, associated ESF actuation capability, and control room indication and alarm.

Technical Reference: BOP ESFAS Tech Manual

CREFAS

The control room essential filtration system uses inputs from two identical monitors (RU-29 and RU-30) which samples intake air from the control room ventilation system. Two off-line gaseous monitors operate in the manner described above for the FBEVAS to detect gross beta activity. RU-29 inputs to train A and RU-30 to train B. At the trip setpoint, the bistable sends a trip signal to the CREFAS module in the BOP-ESFAS.

An automatic actuation signal from either CREFAS train will cross-trip the opposite train, resulting in full actuations of both train A and B control room essential filtration systems. A manual actuation of CREFAS from B05 will only actuate the respective train of CREFAS.

Technical Reference: 40AO-9ZZ17, Inadvertent PPS-ESFAS Actuations

CREFAS is a BOP ESFAS signal, however this actuation is not covered in the Inadvertent PPS-ESFAS Actuations AOP.

PALO VERDE NUCLEAR GENERATING STATION | 40AO-9ZZ17 Revision 25

INADVERTENT PPS-ESFAS ACTUATIONS | Page 2 of 96

TABLE OF CONTENTS

SECTION		PAGE
1.0	ENTRY CONDITIONS	4
2.0	EXIT CONDITIONS	4
3.0	AFAS	5
4.0	CIAS	11
5.0	CSAS	16
6.0	MSIS	29
7.0	RAS	35
8.0	SIAS OR SIAS/CIAS	41
9.0	REFERENCES	58
10.0	BASIS	60

Examination Outline Cross-reference:	Level	RO		SRO
	Tier #	2		
	Group #	1		
	K/A #	076 A3.02		
	Importance Rating	3.7		
K/A: Service Water: Ability to monitor automatic operation of the SWS, including: Emergency heat loads				

Question 51

Given the following conditions:

- An automatic SIAS actuation has just occurred
- Class buses are all powered from off-site power

As SIAS actuated equipment starts, the crew should expect to see the Spray Pond Pumps start ___(1)___ the EDGs and should expect to see the Essential Cooling Water Pumps start ___(2)___ the Essential Chillers.

A. (1) after
(2) after

B. (1) after
(2) before

C. (1) before
(2) after

D. (1) before
(2) before

Answer: B

Explanation:

A. First part is correct. Second part is plausible since several SIAS actuated components start prior to their cooling source (i.e., the EDGs and SI Pumps), however the Essential Chillers start after their cooling source, the Essential Cooling Water Pumps.
B. Correct.
C. First part is plausible since all class buses are powered from offsite and the EDGs have a very limited amount of time they can run without cooling water (SP Pumps), however the EDGs start prior to the Spray Pond Pumps. Second part is plausible since several SIAS actuated components start prior to their cooling source (i.e., the EDGs and SI Pumps), however the Essential Chillers start after their cooling source, the Essential Cooling Water Pumps.
D. First part is plausible since all class buses are powered from offsite and the EDGs have a very limited amount of time they can run without cooling water (SP Pumps), however the EDGs start prior to the Spray Pond Pumps. Second part is correct.

Question Source:		**Bank**	
		Modified Bank	
	X	**New**	
		Previous NRC Exam	

Question Cognitive Level:		**Memory or Fundamental Knowledge**
	x	**Comprehension or Analysis**
	3	**Level of Difficulty**

10 CFR Part 55 Content:	**41.7**

Reference Provided:	**None**

Learning Objective:	Describe the automatic functions / interlocks associated with the Spray Pond System

Technical Reference: PVNGS Operator Information Manual

MODE 1
SAFETY INJECTION ACTUATION SIGNAL/
CONTAINMENT SPRAY ACTUATION SIGNAL

Time Seconds	Sequencer Starts
0	Diesel Generators Start (not started from the sequencer started directly from the SIAS or CSAS Auxiliary Relays)
0	High Pressure Safety Injection Pumps A & B
0	Charging Pump Permissive Actuation Relay Blocked (can be manually started)
5	Low Pressure Safety Injection Pumps A & B
5	Control Room Essential Air Handling Units A & B
5	Fuel Building Essential Air Filtration Units A & B
10	Auxiliary Feed Pump (Essential B)
15	Containment Spray Pumps A & B
20	Essential Cooling Water Pumps A & B
25	Essential Spray Ponds Pumps A & B
25	Diesel Generator Building Essential Exhaust Fans A & B
30	Essential Chillers A & B
40	Charging Pump Permissive Actuation Relay Unblocked

Examination Outline Cross-reference:	Level	RO		SRO
	Tier #	2		
	Group #	1		
	K/A #	076 A2.01		
	Importance Rating	3.5		
K/A: Service Water: Ability to (a) predict the impacts of the following malfunctions or operations on the SWS; and (b) based on those predictions, use procedures to correct, control, or mitigate the consequences of those malfunctions or operations: Loss of SWS				

Question 52

Given the following conditions:

- Unit 1 tripped from 100% due to a loss of offsite power
- The ‘A’ Spray Pond Pump failed to auto start

Per 40EP-9EO01, Standard Post Trip Actions, the crew should ___(1)___ , and this action should be completed within a MAXIMUM of ___(2)___ minutes to prevent damage to the ‘A’ EDG.

A. (1) trip the ‘A’ EDG
(2) 2.6

B. (1) trip the ‘A’ EDG
(2) 15

C. (1) start the ‘A’ Spray Pond Pump
(2) 2.6

D. (1) start the ‘A’ Spray Pond Pump
(2) 15

Answer: C

Explanation:

A. First part is plausible since tripping the 'A' EDG would be correct if the 'A' Spray Pond Pump received a white SESS alarm, however a blue SESS alarm warrants attempting to manually start the pump. Second part is correct.
B. First part is plausible since tripping the 'A' EDG would be correct if the 'A' Spray Pond Pump received a white SESS alarm, however a blue SESS alarm warrants attempting to manually start the pump. Second part is plausible since 15 minutes is the time limit for an EDG to run unloaded and since the 'A' Spray Pond failed to start, it is plausible that the sequencer failed to load the EDG on the bus, however the spray pond pump start signal is after the EDG loads onto the bus and the blue SESS alarm is indicative of receiving a start signal.
C. Correct.
D. First part is plausible since tripping the 'A' EDG would be correct if the 'A' Spray Pond Pump received a white SESS alarm, however a blue SESS alarm warrants attempting to manually start the pump. Second part is plausible since 15 minutes is the time limit for an EDG to run unloaded and since the 'A' Spray Pond failed to start, it is plausible that the sequencer failed to load the EDG on the bus, however the spray pond pump start signal is after the EDG loads onto the bus and the blue SESS alarm is indicative of receiving a start signal.

Question Source:		**Bank**	
		Modified Bank	
	x	**New**	
		Previous NRC Exam	

Question Cognitive Level:		**Memory or Fundamental Knowledge**
	x	**Comprehension or Analysis**
	3	**Level of Difficulty**

10 CFR Part 55 Content:	**41.8**

Reference Provided:	**None**

Learning Objective:	Describe the EOP expectation concerning the Maintenance of Vital Auxiliaries (Diesel Generator)

Technical Reference: 40EP-9EO01, Standard Post Trip Actions

PALO VERDE NUCLEAR GENERATING STATION **STANDARD POST TRIP ACTIONS**	40EP-9EO01 Revision 22 Page 7 of 16
INSTRUCTIONS	CONTINGENCY ACTIONS
3. (continued)	b.2 **IF** a DG is running **THEN** perform the following: 1) **IF** the associated Spray Pond Pump is **NOT** running, **THEN** start the associated Spray Pond Pump. 2) **IF** the associated Spray Pond Pump can **NOT** be started, **THEN** direct an operator to emergency stop the DG.

Technical Reference: 40AL-9ES2A, Safety Equipment Status System Panel ESA-UA-2A Alarm Responses

Response Section

SEAS 10J
ESS SPRAY POND
PMP A P01

Essential Spray Pond Pump A SPA-P01

Point ID	Description	Setpoint
PBA-S03C-752 contact	Ckt Bkr for SPA-P01 "A" Spray Pond Pump	SPA-P01 NOT running

AUTOMATIC ACTIONS

- None

MANUAL ACTIONS

___ 1. Verify Train B alarm ES2B03D SEAS 10J, ESS SPRAY POND PMP B P01, is clear to confirm the redundant train operated properly.

___ 2. Attempt to start SPA-P01 using handswitch SPA-HS-1, ESS Spray Pond Pump A P01.

Technical Reference: 40OP-9DG01, Emergency Diesel Generator A

Emergency Diesel Generator A	40OP-9DG01	Revision 78

3.0 PRECAUTIONS AND LIMITATIONS

3.1 Precautions

3.1.1 Transferring the voltage regulator control mode while the Diesel Generator is operating will cause a current surge resulting in equipment damage.

3.1.2 If either control power supply (DC Power On circuit 1 & 2 control power lights on DGA-B01) to the DG is lost, the DG output breaker may not trip if the Diesel Generator should trip during parallel operation. Under these circumstances, PBA-S03B, "A" DG Output Breaker, must be tripped manually to prevent motorizing Train A Diesel Generator.

3.2 Limitations

3.2.1 DGA-HS-07, DG "A" Mode Control, shall not be placed to OFF except for maintenance. Placing DGA-HS-07, DG "A" Mode Control, to OFF will prevent Train A Diesel Generator from starting in either automatic or manual modes.

3.2.2 When Bus PBA-S03 is being supplied from the alternate ESF Transformer (NBN-X04), electrical interlocks prevent paralleling with the Emergency Diesel Generator PEA-G01.

3.2.3 NO smoking or open flames are permitted in the vicinity of the Fuel Oil System.

3.2.4 Safe operating time periods following a loss of Spray Pond water:

- Full load - 2.6 minutes
- Zero load - 15 minutes

Examination Outline Cross-reference:	Level	RO		SRO
	Tier #	2		
	Group #	1		
	K/A #	078 K4.03		
	Importance Rating	3.1		
K/A: Instrument Air: Knowledge of IAS design feature(s) and/or interlock(s) which provide for the following: Securing of SAS upon loss of cooling water				

Question 53

On a loss of Turbine Cooling Water to the Service Air Compressor, the Service Air Compressor should trip on ___(1)___ and Service Air pressure should be restored by ___(2)___ .

A. (1) high temperature
(2) manually aligning the backup Service Air Compressor

B. (1) high temperature
(2) backup nitrogen automatically aligning to the Service Air header

C. (1) low cooling water flow
(2) manually aligning the backup Service Air Compressor

D. (1) low cooling water flow
(2) backup nitrogen automatically aligning to the Service Air header

Answer: A

Explanation:

A. Correct.
B. First part is correct. Second part is plausible since backup nitrogen supplies pressure for the IA system on a loss of IA, however on a loss of SA, the IA system provides system pressure.
C. First part is plausible since a loss of cooling water flow did occur, and a low cooling water flow trip exists for other plant components (Main Turbine for example), however the SA compressor trips on high temp, not low flow. Second part is correct.
D. First part is plausible since a loss of cooling water flow did occur, and a low cooling water flow trip exists for other plant components (Main Turbine for example), however the SA compressor trips on high temp, not low flow. Second part is plausible since backup nitrogen supplies pressure for the IA system on a loss of IA, however on a loss of SA, the IA system provides system pressure.

Question Source:		**Bank**	
		Modified Bank	
	x	**New**	
		Previous NRC Exam	

Question Cognitive Level:	**x**	**Memory or Fundamental Knowledge**
		Comprehension or Analysis
	3	**Level of Difficulty**

10 CFR Part 55 Content:	**41.4**

Reference Provided:	**None**

Learning Objective:	Describe the automatic functions associated with the Instrument Air System

Technical Reference: Instrument and Service Air Tech Manual

1.2.2 Service/Breathing Air System

The service/breathing air system (figure A-2) supplies oil free, dry breathing quality air at a maximum pressure of 125 psig to service air stations and breathing air stations located throughout the generating unit. Service air stations are provided for the operation of miscellaneous pneumatic tools, stud tensioners, stud tension hoists, resin transfer, refueling machine manual operation, and other service requirements. Breathing air stations are provided to allow personnel to perform equipment maintenance without the need for self contained breathing apparatus. A single air compressor and two air receivers supply this subsystem. A flanged piping connection is provided to use a portable air compressor in the event the permanent air compressor is unavailable. To preclude the possibility of nitrogen carry over contaminating the breathing air supply, there is no cross tie with the IA system. The service air system is divided into distinct functional loops. The loop located in the turbine, control and diesel buildings is used strictly for service air. The loop located in the auxiliary, fuel, radwaste and containment buildings is used for both service air and breathing air. The loops are separated by the use of double check valves. These check valves used in conjunction with the check valves on each of the breathing air connections, preclude the introduction of undesirable gasses into the breathing air system.

The service/breathing air system is provided with a two stage, rotary screw air compressor furnished with a filter silencer, an intercooler, an aftercooler, and a moisture separator. The turbine cooling water system supplies cooling water for the air compressor package.

Technical Reference: Instrument and Service Air Tech Manual

Service/Breathing Air Compressor Controls (HS-213A, HS-213B)

The service/breathing air compressor can be controlled from the main control room from panel B07 or from the compressor local control panel.

The compressor will automatically trip on any of the following conditions:

- Low lube oil pressure
- High lube oil pressure
- High 1st stage outlet temperature
- High intercooler outlet temperature
- High 2nd stage outlet temperature
- High outlet air pressure
- Motor electrical fault

Examination Outline Cross-reference:	Level	RO		SRO
	Tier #	2		
	Group #	1		
	K/A #	078 A4.01		
	Importance Rating	3.1		
K/A: Instrument Air: Ability to manually operate and/or monitor in the control room: Pressure gauges				

Question 54

Given the following Instrument Air Header Pressure indications on **UNIT 1**:

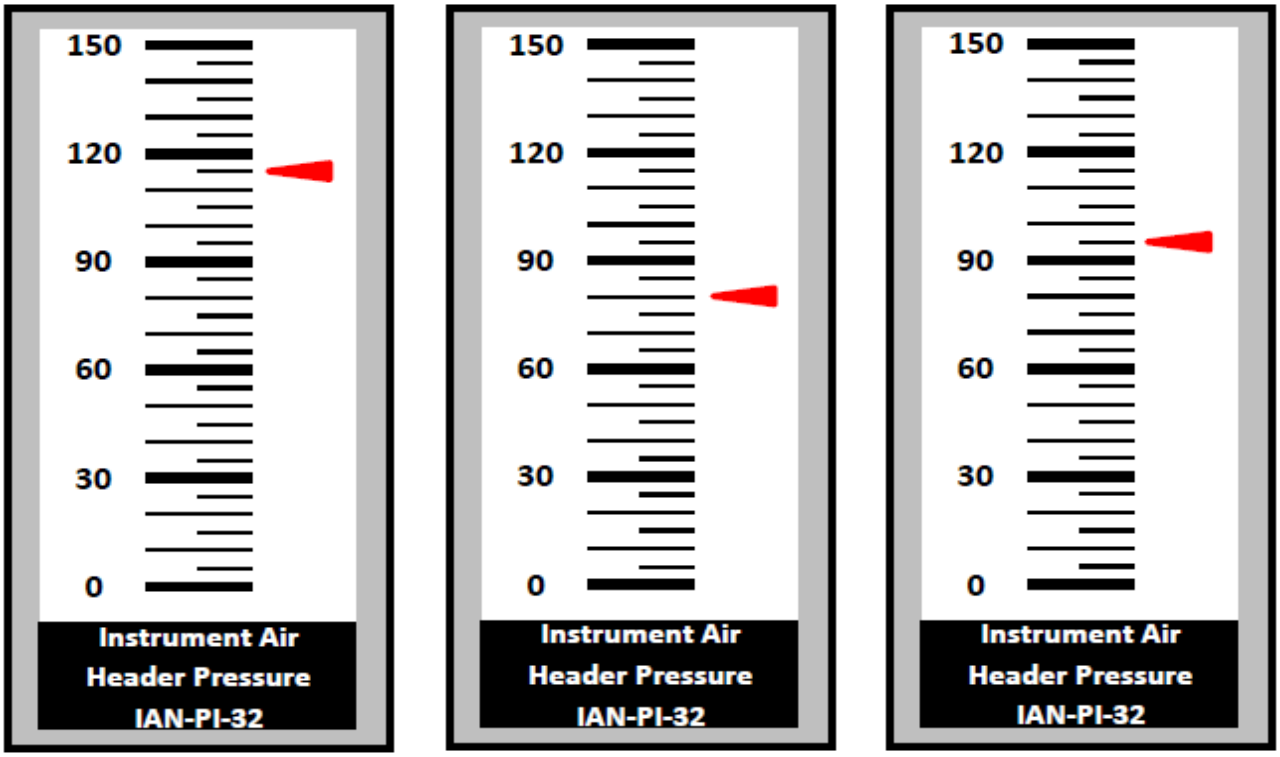

At time = 0100

At time = 0110
(lowest pressure reached)

At time = 0120

With NO operator action, at time = 0120, the Nitrogen Backup Valve will be ___(1)___ and letdown will ___(2)___ .

A. (1) open
(2) be isolated

B. (1) open

(2) remain in service

C. (1) closed
(2) be isolated

D. (1) closed
(2) remain in service

Answer: B

Explanation:

A. First part is correct. Second part is plausible since letdown does isolate at less than 90 psig due to TV-223 (NC flow control valve to the letdown HX), however this is only true on Unit 3 (units 1 and 2 have been modified to change the fail close pressure on TV-223 to 38-48 psig).
B. Correct.
C. First part is plausible since the N2 backup valve opens at 85 psig and the low IA pressure alarm setpoint is 95 psig which would be a logical point at which the N2 backup valve would re-close, however the N2 backup valve doesn't re-close until 105 psig. Second part is plausible since letdown does isolate at less than 90 psig due to TV-223 (NC flow control valve to the letdown HX), however this is only true on Unit 3 (units 1 and 2 have been modified to change the fail close pressure on TV-223 to 38-48 psig).
D. First part is plausible since the N2 backup valve opens at 85 psig and the low IA pressure alarm setpoint is 95 psig which would be a logical point at which the N2 backup valve would re-close, however the N2 backup valve doesn't re-close until 105 psig. Second part is correct.

Question Source:		**Bank**	
		Modified Bank	
	x	**New**	
		Previous NRC Exam	

Question Cognitive Level:		**Memory or Fundamental Knowledge**
	x	**Comprehension or Analysis**
	3	**Level of Difficulty**

10 CFR Part 55 Content:	**41.4**

Reference Provided:	**None**

Learning Objective:	Describe the Control Room indications associated with the IA system

Technical Reference: 40AO-9ZZ05, Loss of Instrument Air

Appendix A, Expected Component Failure as System Pressure Drops

PRESS	COMPONENT	ACTION
90 psig CD	CDN-PV-195, Demin Pressure Control Valve (FO)	**NOTE** Flow will bypass the polishers.
Unit 3 Only- NC	NCN-TV-223, NC Letdown Hx Outlet Temperature Control Valve (FC)	**NOTE** Valve closure will cause letdown outlet temperature to increase and CHB-UV-523, Regen Hx to Letdown Hx Valve, will close, isolating letdown. ____ 1. **IF** letdown will be restored, **THEN** perform the following:

Technical Reference: 40AO-9ZZ05, Loss of Instrument Air

Appendix A, Expected Component Failure as System Pressure Drops

PRESS	COMPONENT	ACTION
48 - 38 psig CH	CHA-UV-560 & CHB-UV-561, RDT Outlet Containment Isolation valve (FC)	**NOTE** Reactor Drain Tank Pump will trip when CHA-UV-560 or CHA-UV-561 & CHN-UV-563 are closed. ____ 1. **IF ALL** of the following conditions exist: • RDT pressure is greater than 5 psig • CHN-UV-540, RDT Vent to Gas Surge Tank has failed closed • CRS/Shift Manager directs **THEN** open CHN-HV-923, RDT Remote Manual Vent Vlv, to maintain RDT pressure less than 10 psig.
	CHA-UV-516 & CHB-UV-515, Letdown to Regen Hx Isolation (FC) CHB-UV-523, Letdown Hx Inlet (FC)	

Examination Outline Cross-reference:	Level	RO		SRO
	Tier #	2		
	Group #	1		
	K/A #	103 K1.08		
	Importance Rating	3.6		
K/A: Containment: Knowledge of the physical connections and/or cause-effect relationships between the containment system and the following systems: SIS, including action of safety injection reset				

Question 55

Given the following initial conditions:

- The A and C Containment Normal ACU Fans are running and red-flagged with their hand switches in the AUTO AFTER START position
- The B and D Containment Normal ACU Fans are in standby and green-flagged with their hand switches in the AUTO AFTER STOP position

Subsequently:

- An inadvertent Train ‘A’ SIAS occurred

(1) Two minutes after the Train ‘A’ SIAS actuation, with NO operator action, the B and D Containment Normal ACU Fans should be…

(2) When the SIAS actuation is reset, and SIAS load shed panels have been re-energized, the A and C Containment Normal ACU Fans should be…

A. (1) running
(2) running

B. (1) running
(2) stopped

C. (1) stopped
(2) running

D. (1) stopped
(2) stopped

Answer: B

Explanation:

A. First part is correct. Second part is plausible since the A and C ACU fans are red-flagged (hard start), however following reset of the SIAS actuation, the Normal ACU fans are locked out until the ACU fan handswitch is taken to stop.
B. Correct.
C. First part is plausible since some ESFAS actuations which only occur on one train will impact equipment on both trains (a Train 'A' MSIS will close MSIVs on both trains), a SIAS only trips the Containment Normal ACU Fans on the associated train. Second part is plausible since there would be no signal which would trip the B and D fans and the A and C fans are red-flagged, however the lockout on the A and C fans will prevent them from auto restarting. Additionally, the Reactor Cavity Cooling Fans will automatically restart upon re-energization of the SIAS load shed panels if they are in the START position, making the restart of the A and C fans more plausible.
D. First part is plausible since some ESFAS actuations which only occur on one train will impact equipment on both trains (a Train 'A' MSIS will close MSIVs on both trains), a SIAS only trips the Containment Normal ACU Fans on the associated train. Second part is correct.

Question Source:		**Bank**	
		Modified Bank	
	x	**New**	
		Previous NRC Exam	

Question Cognitive Level:		**Memory or Fundamental Knowledge**
	x	**Comprehension or Analysis**
	3	**Level of Difficulty**

10 CFR Part 55 Content:	**41.7**

Reference Provided:	**None**

Learning Objective:	Describe the automatic functions associated with the Containment Building Normal ACU Fans

Technical Reference: Containment HVAC Tech Manual

Normal Cooling System ACU Controls (HS-11, 12, 13, and 14)

A four position (START/STOP/PULL TO LOCK/AUTO) spring return to AUTO control switch is provided on B07 in the Control Room for each ACU. When momentarily placed in the START position, the associated breaker closes starting the ACU fan and the associated discharge damper and cooling water supply valve opens. When momentarily placed in the STOP position, the associated breaker opens, stopping the fan and closing the discharge damper and cooling water supply valve. The switches spring return to the AUTO position. When in the PULL TO LOCK position, the ACU control circuit is de-energized, preventing operation.

When in the AUTO (after stop) position, the standby ACU automatically starts if low differential pressure is sensed on the associated operating fan. ACUs in AUTO (after stop) will automatically start in accordance with diesel generator load sequencing following a loss of off-site power. Operating ACUs will trip upon receipt of a Safety Injection Actuation Signal (SIAS) or load shed signal. Following receipt of a SIAS, the operator can return the ACU to service by momentarily positioning the control switch to STOP and then to START. When moved to STOP, a white OVERRIDE indicator illuminates indicating the trip can be overridden. When placed in override the ACU will start and will continue to run even if the SIAS is reset.

The Normal ACU is equipped with a SIAS stop interlock which prevents it from auto starting when the SIAS is reset. Upon the receipt of a SIAS, the interlock causes a latching relay to change state, blocking the ACUs auto start feature. In order to restore the auto start feature, the hand switch must be taken to stop. This action energizes the latching relay, returning it to the pre-SIAS condition.

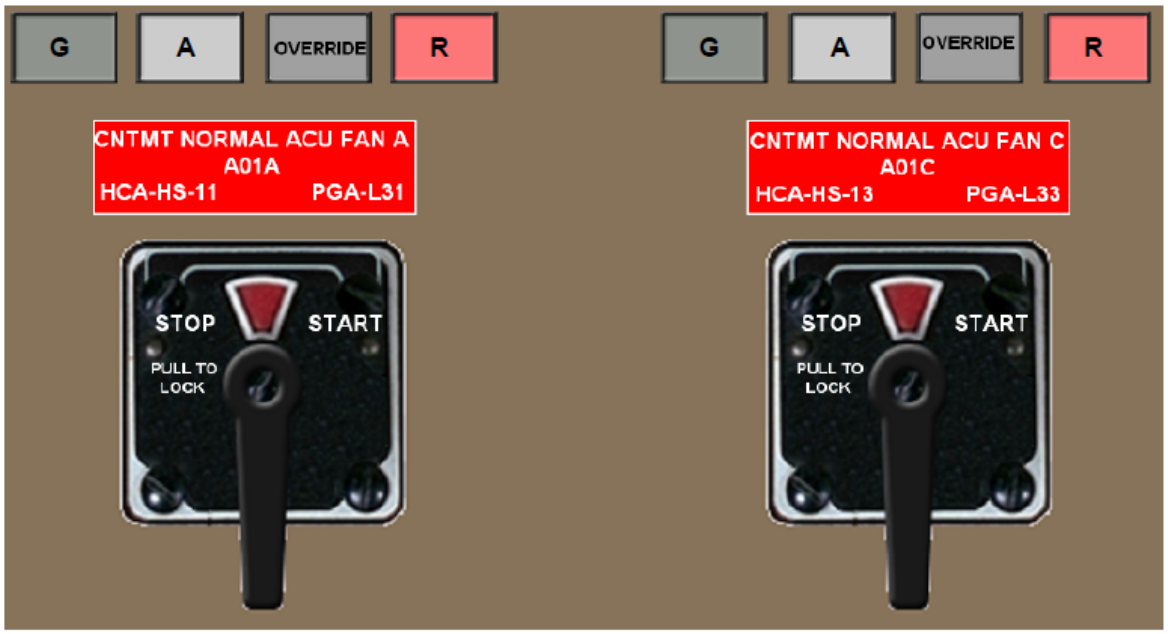

Technical Reference: 40AO-9ZZ17, Inadvertent PPS-ESFAS Actuations

Attachment C-13 SIAS Train A Page 3 of 4

Actuation Leg		Component	Handswitch	Actuated Condition	In Actuated Condition (Circle one)	As Left Condition (Circle one)
1-3		SIT 1A Outlet to RC Loop 1A Valve	SIA-HS-634	Open	Y / N	Open / Closed
1-3		SIT 1B Outlet to RC Loop 1B Valve	SIA-HS-644	Open	Y / N	Open / Closed
1-3		Misc Drain Header To RWT Valve	SIA-HS-682	Closed	Y / N	Open / Closed
1-3		Letdown to Regen Hx Isolation Valve	CHA-HS-516	Closed	Y / N	Open / Closed
	2-4	Backup Heaters Bank	RCA-HS-100-4	Tripped	Y / N	Tripped / Closed
	2-4	S/U Aux Feed Pump	AFA-HS-11	Stopped	Y / N	Run / Stop
	2-4	Condensate Transfer Pump A	CTA-HS-15	Running	Y / N	Run / Stop
	2-4	Normal Chiller A / Circ Pump A	WCA-HS-1A	Stopped	Y / N	Run / Stop
	2-4	Containment Normal ACU Fan A	HCA-HS-11	Stopped	Y / N	Run / Stop
	2-4	Containment Normal ACU Fan C	HCA-HS-13	Stopped	Y / N	Run / Stop
	2-4	CEDM ACU Fans A/C	HCA-HS-49	Stopped	Y / N	Run / Stop

Technical Reference: 40AO-9ZZ17, Inadvertent PPS-ESFAS Actuations

Attachment C-14 SIAS Train B Page 3 of 3

1-3		SI Line to RC Loop 1A Drain Valve	SIB-HS-638	Closed	Y / N	Open / Closed
1-3		SI Line to RC Loop 1B Drain Valve	SIB-HS-648	Closed	Y / N	Open / Closed
1-3		SI Line to RC Loop 2A Drain Valve	SIB-HS-618	Closed	Y / N	Open / Closed
1-3		SI Line to RC Loop 2B Drain Valve	SIB-HS-628	Closed	Y / N	Open / Closed
1-3		Letdown To Regen Hx Isolation Valve	CHB-HS-515	Closed	Y / N	Open / Closed
	2-4	Backup Heaters Bank	RCB-HS-100-5	Tripped	Y / N	Tripped / Closed
	2-4	Condensate Transfer Pump B	CTB-HS-16	Running	Y / N	Run / Stop
	2-4	Essential Electric Auxiliary Feed Pump	AFB-HS-10	Running	Y / N	Run / Stop
	2-4	Containment Normal ACU Fan B	HCB-HS-12	Stopped	Y / N	Run / Stop
	2-4	Containment Normal ACU Fan D	HCB-HS-14	Stopped	Y / N	Run / Stop
	2-4	CEDM ACU Fans B/D	HCB-HS-50	Stopped	Y / N	Run / Stop

Examination Outline Cross-reference:	Level	RO		SRO
	Tier #	2		
	Group #	2		
	K/A #	001 G 2.4.50		
	Importance Rating	4.2		
K/A: Control Rod Drive: Ability to verify system alarm setpoints and operate controls identified in the alarm response manual				

Question 56

Given the following conditions:

- Unit 3 is operating at 100% power

Subsequently:

- Group 4 CEA #88 dropped to the bottom of the core, resulting in the following alarms:
  - LO DNBR trip and pre-trip alarms on B05 on Channel ‘A’ ONLY
  - HI LPD trip and pre-trip alarms on B05 on Channel ‘A’ ONLY
  - CWP (CEA WITHDRAWAL PROHIBIT) alarm on B04

The CWP was caused by the ___(1)___ and, when the cause of the drop has been corrected, CEA #88 can be withdrawn by bypassing the ___(2)___ .

A. (1) CEA deviation
(2) CWP

B. (1) CEA deviation
(2) Channel ‘A’ LO DNBR TRIP and HI LPD TRIP bistables

C. (1) LO DNBR and HI LPD pre-trip alarms
(2) CWP

D. (1) LO DNBR and HI LPD pre-trip alarms
(2) Channel ‘A’ LO DNBR TRIP and HI LPD TRIP bistables

Answer: A

Explanation:

A. Correct.
B. First part is correct. Second part is plausible since LO DNBR PRE TRIPs or HI LPD TRIPs will result in a CWP alarm, and bypassing the LO DNBR TRIP would bypass that alarm, however it takes two LO DNBR PRE TRIP alarms to actuate the CWP.
C. First part is plausible since LO DNBR PRE TRIPs will result in a CWP alarm, however it takes a pre-trip on two channels to generate a CWP. Second part is correct.
D. First part is plausible since LO DNBR PRE TRIPs will result in a CWP alarm, however it takes a pre-trip on two channels to generate a CWP. Second part is plausible since LO DNBR PRE TRIPs will result in a CWP alarm, and bypassing the LO DNBR TRIP would bypass that alarm, however it takes two LO DNBR PRE TRIP alarms to actuate the CWP.

Question Source:		**Bank**	
		Modified Bank	
	x	**New**	
		Previous NRC Exam	

Question Cognitive Level:		**Memory or Fundamental Knowledge**
	x	**Comprehension or Analysis**
	3	**Level of Difficulty**

10 CFR Part 55 Content:	**41.7**

Reference Provided:	**None**

Learning Objective:	Describe the normal operation and any automatic functions / interlocks associated with CEDMCS

Technical Reference: CEDMCS Tech Manual

2.2.21 Cabinet C4 Supervisory Panel

The supervisory panel, rack mounted in bay 1, contains three rows of red LED indicator lamps and a LAMP TEST switch. The upper row of 18 red COOLING FAILURE LED lamps will light to indicate that an overheating condition exists; the lighted indicator will indicate the failure by cabinet and bay. At the same time, a CEDMCS annunciator will be initiated in the control room.

The center row of 13 red CEDMCS STATUS LED lamps will light to indicate that the CEDMCS is operating under restricted or abnormal conditions. The following identifies these CEDMCS STATUS indicator functions:

AWP - (Automatic Withdrawal Prohibit). The red AWP indicator comes on upon receipt of one of the following external signals; TAVG/TREF deviation, steam bypass demand AWP or high T-COLD temperature alarm.

CWP - (CEA Withdrawal Prohibit). The red CWP indicator comes on upon external input from the plant protective system indicating one of the following: a two out of four pre-trip of high pressurizer pressure, or two out of four CPC channels have a pre-trip on either high LPD or low DNBR, or RPCB flag input from CEACs to that CPC.

Technical Reference: CEDMCS Tech Manual

Figure 2 - 22 Operators Module

Located to the right of the five selector switches is a three position joystick operated switch. When moved to the WITHDRAW position in either the MG, MS, or MI mode, the selected group or individual CEA will withdraw. Conversely, in the INSERT position, the group or CEA will insert. In its normal midpoint position, the joystick switch will be in the off position.

Immediately to the left of the five selector switches is the covered pushbutton CWP/B (CEA withdrawal prohibit bypass) switch. When held depressed, the red indicator immediately above the switch will be lighted, and the CWP signal from the plant protection system (PPS) will be bypassed permitting normal operation of the CEDMCS. At the left of the CWP/B switch is a three position momentary LAMP TEST switch. Holding the switch forward (upward) will energize all white lamps on the module. Conversely, in the down position, the red, green, and amber lamps will be energized. Both lamp test positions energize the core mimic display.

Technical Reference: Core Protection Calculator Lesson Plan

EO: 1.15 Explain how the Out of Sequence, Excess Part Strength Insertion, and Subgroup Deviation Penalty Factors are generated in the Core Protection Calculators.

Main Idea

If the regulating groups are moved **Out-of-sequence a Penalty Factor** will be generated and applied to the value of LPD and DNBR. When a lower number regulating group is lower than a higher number regulating group (by using the target rods in that quadrant) and the groups are out of the ~10 inch dead band at the top and bottom of the core, then the CPC will generate a penalty factor.

If a particular CEA group contains more than one sub-group (Example is RG4 which contains SG5 and SG22), then the CPC compares the position of those sub-group target rods for deviation. If a deviation greater than setpoint is detected, then the CPC generates a **Subgroup Deviation Penalty Factor**.

Technical Reference: PVNGS Operator Information Manual

CEA 88 is an 'A' quadrant CEA, therefore the CPC trips only actuate on Channel A

Note:
Upon a loss of PNC-D27 all CEA's in quadrant(s) A, B, and C will reset their pulse counters to zero.

Upon a loss of PND-D28 all CEA's in quadrant D will reset their pulse counters to zero.

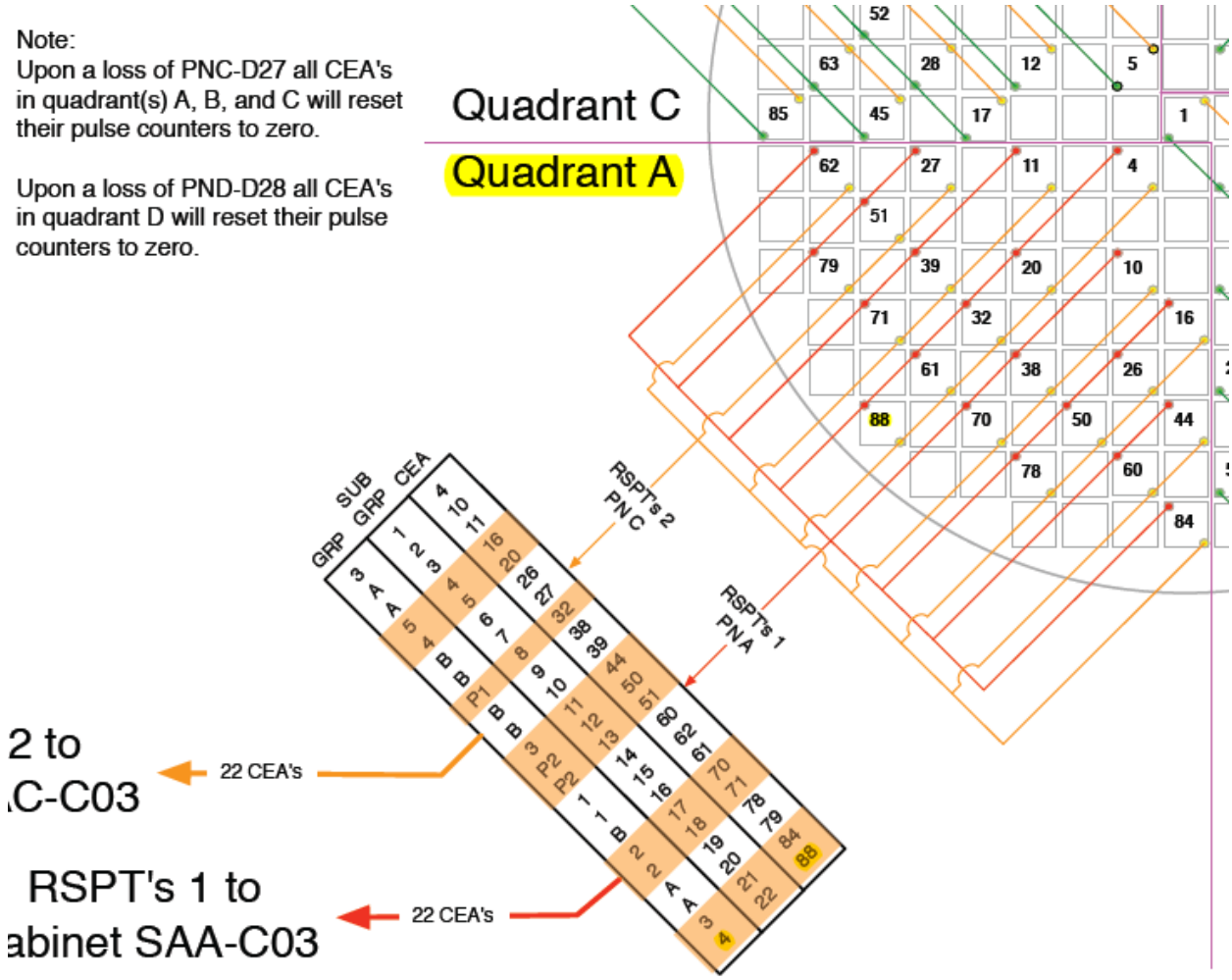

Technical Reference: PVNGS Operator Information Manual

Since there are two group 4 CEAs in quadrant A, when one deviates, a CPC penalty factor is generated which actuates the LO DNBR and HI LPD trips on Channel A only.

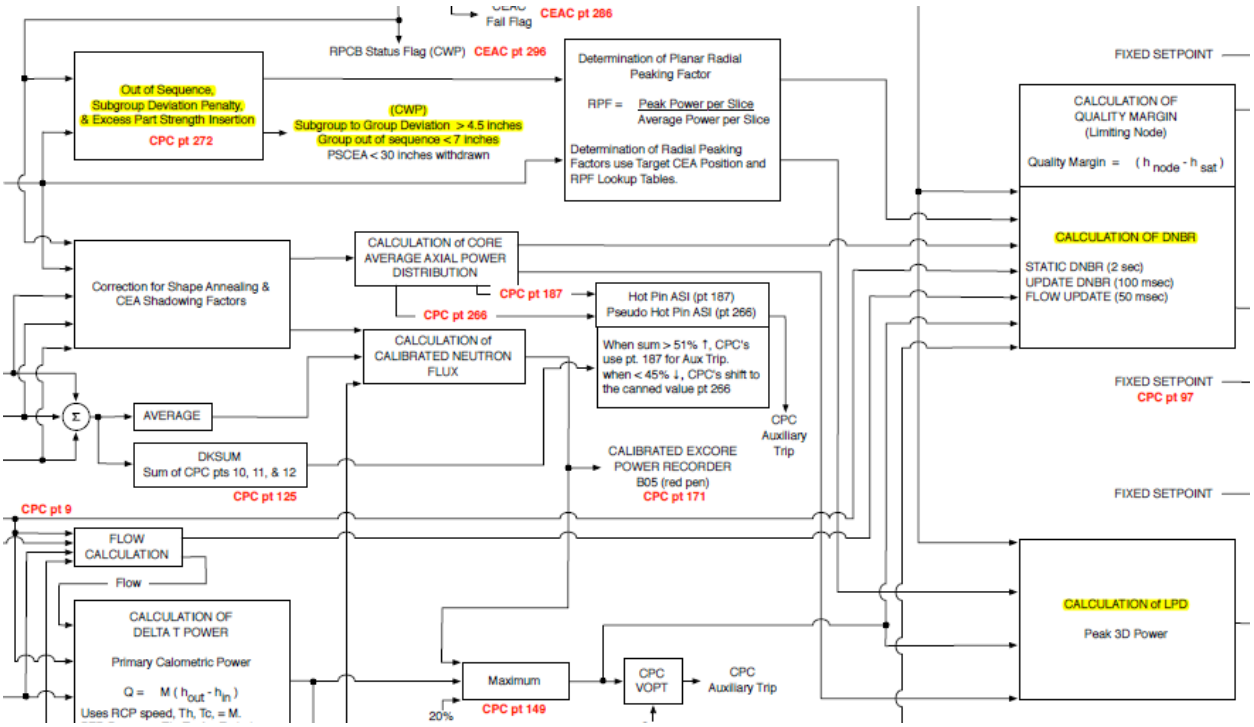

Examination Outline Cross-reference:	Level	RO		SRO
	Tier #	2		
	Group #	2		
	K/A #	002 A3.03		
	Importance Rating	4.4		
K/A: Reactor Coolant: Ability to monitor automatic operation of the RCS, including: Pressure, temperature, and flows				

Question 57

Given the following condition:

- Unit 2 is was operating at 100% power when the Main Turbine tripped

With NO operator action, RCS Tave will initially rise, then stabilize at ___(1)___ and RCS pressure will initially rise, then stabilize at ___(1)___

A. (1) a temperature higher than the pre-trip RCS Tave
(2) the pre-trip RCS pressure

B. (1) a temperature higher than the pre-trip RCS Tave
(2) a pressure higher than the pre-trip RCS pressure

C. (1) a temperature lower than the pre-trip RCS Tave
(2) the pre-trip RCS pressure

D. (1) a temperature lower than the pre-trip RCS Tave
(2) a pressure higher than the pre-trip RCS pressure

Answer: C

Explanation:

A. First part is plausible Thot will be lower and Tcold will higher, which could result in Tave remaining constant, however Tcold rises at slower rate than Thot lowers, therefore the net result is a lower Tave following the turbine trip. Second part is correct.
B. First part is plausible Thot will be lower and Tcold will higher, which could result in Tave remaining constant, however Tcold rises at slower rate than Thot lowers, therefore the net result is a lower Tave following the turbine trip. Second part is plausible since heat is rejected into the RCS causing RCS pressure to initially rise, however pressure is maintained at a constant 2250 psia at all MODE 1 power levels. Additionally, Pressurizer level is variable based on power level, which adds plausibility to the possibility that Pressurizer pressure also would be variable, however it is maintained at 2250 psia at all MODE 1 power levels.
C. Correct.
D. First part is correct. Second part is plausible since heat is rejected into the RCS causing RCS pressure to initially rise, however pressure is maintained at a constant 2250 psia at all MODE 1 power levels. Additionally, Pressurizer level is variable based on power level, which adds plausibility to the possibility that Pressurizer pressure also would be variable, however it is maintained at 2250 psia at all MODE 1 power levels.

Question Source:		**Bank**	
		Modified Bank	
	x	**New**	
		Previous NRC Exam	

Question Cognitive Level:		**Memory or Fundamental Knowledge**
	x	**Comprehension or Analysis**
	2	**Level of Difficulty**

10 CFR Part 55 Content:	**41.5**

Reference Provided:	**None**

Learning Objective:	Explain the operation of the Pressurizer under normal operating conditions

Technical Reference: Reactor Coolant System Tech Manual

The following are the design nominal values for reactor coolant system parameters:

Normal Operating Pressure	2250 psia
Temperature:	
Hot Leg (Full Power, Outlet)	610°F
Cold Leg (Full Power, Inlet)	555°F
Cold Leg (Zero Power, Inlet)	564°F
Flow:	
Each Loop	82×10^6 lb/hr
Total	164×10^6 lb/hr
Thermal Power:	
RCPs and Pzr heaters	23 MWT
Core	3876 MWT
Total	3899 MWT

Technical Reference: PPCS Tech Manual

While RCS Temp and Pressurizer level are variable based on power and temperature, RCS pressure is maintained at the setpoint set by the operator, regardless of changed to those parameters.

Pressurizer Pressure Control System (PPCS)

The pressurizer pressure controller normally functions to maintain system pressure at the desired setpoint by controlling the operation of the proportional heater banks and spray valves. When operating in the automatic mode, the pressure controller compares actual pressurizer pressure to the setpoint input from the operator. Controller output is adjusted in proportion to the deviation from setpoint value. This signal is sent to the spray valve electro-pneumatic controllers and the proportional heater control units. At zero error (measured pressure = setpoint pressure), controller output is at 16.5% (figure A-7). For this condition, the proportional heater banks would be 50% energized and the spray valves closed.

RCN-PIC-100 receives power from NNN-D12. A loss of power to this controller wil result in the controller failing to zero output (0 ma).

Examination Outline Cross-reference:	Level	RO		SRO
	Tier #	2		
	Group #	2		
	K/A #	011 K2.02		
	Importance Rating	3.1		
K/A: Pressurizer Level Control: Knowledge of bus power supplies to the following: PZR heaters				

Question 58

The Class Pressurizer Backup Heaters are powered from ___(1)___ and the Non-Class Pressurizer Backup Heaters are powered from ___(2)___ .

A. (1) PHA-M31 and PHB-M32
(2) NGN-L11 and NGN-L12

B. (1) PHA-M31 and PHB-M32
(2) NHN-M10 and NHN-M28

C. (1) PGA-L33 and PGB-L32
(2) NGN-L11 and NGN-L12

D. (1) PGA-L33 and PGB-L32
(2) NHN-M10 and NHN-M28

Answer: C

Explanation:

A. First part is plausible since class heaters are powered from class 480V power, and the power supplies are located in the control building, as are PHA-M31 and MHB-M32, however the class heaters are powered from PGA-L33 and PGA-L32. Second part is correct.
B. First part is plausible since class heaters are powered from class 480V power, and the power supplies are located in the control building, as are PHA-M31 and MHB-M32, however the class heaters are powered from PGA-L33 and PGA-L32. Second part is plausible since non-class heaters are powered from non-class 480V power, and the power supplies are located in the aux building, are are NHN-M10 and NHN-M28, however the non-class heaters are powered from NGN-L11 and NGN-L12.
C. Correct.
D. First part is correct. Second part is plausible since non-class heaters are powered from non-class 480V power, and the power supplies are located in the aux building, are are NHN-M10 and NHN-M28, however the non-class heaters are powered from NGN-L11 and NGN-L12.

Question Source:		**Bank**	
		Modified Bank	
	x	**New**	
		Previous NRC Exam	

Question Cognitive Level:	**x**	**Memory or Fundamental Knowledge**
		Comprehension or Analysis
	2	**Level of Difficulty**

10 CFR Part 55 Content:	**41.7**

Reference Provided:	**None**

Learning Objective:	Describe the Control Room controls associated with the Pressurizer Heaters including its indications

Technical Reference: 40AO-9ZZ12, Degraded Electrical Power

PBA-S03J/PGA-L33 Loads

(Bold T.S. numbers indicate less than 2 hour action requirements)

Equipment	Alt Equip	Power	TS / TRM Reference
RCA-HS-100-4, Pressurizer Backup Htr Bank	RCB-HS-100-5	PGB-L32E3	• LCO 3.4.9 (Mode 1 - 4) • TLCO 7.0.200

Technical Reference: 40AO-9ZZ12, Degraded Electrical Power

PBB-S04J/PGB-L32 Loads

Equipment	Alt Equip	Power	TS / TRM Reference
RCB-HS-100-5, Pressurizer Backup Htr Bank	RCA-HS-100-4	PGA-L33D4	• LCO 3.4.9 (Mode 1 - 4) • TLCO 7.0.200

Technical Reference: 40AO-9ZZ12, Degraded Electrical Power

NGN-L11 Loads

Equipment	Alt Equip	Power	TS / TRM Reference
RCN-D01, Pressurizer Back-up Htrs Dist Panel	RCN-D02	NGN-L12C2	• LCO 3.4.9 (Mode 1 - 4) • TLCO 7.0.200
RCN-D03, Pressurizer Back-up Htrs Dist Panel	RCN-D04	NGN-L12C3	
RCN-HS-100-1, Proportional Htrs Bank	RCN-HS-100-2	NGN-L12C4	

Supply Breaker: NAN-S01F

Location: Auxiliary Building 100' West Penetration Room

Drawing: E-NGA-011

Technical Reference: 40AO-9ZZ12, Degraded Electrical Power

NGN-L12 Loads

Equipment	Alt Equip	Power	TS / TRM Reference
RCN-D02, Pressurizer Back-up Htrs Dist Panel	RCN-D01	NGN-L11C2	• LCO 3.4.9 (Mode 1 - 4) • TLCO 7.0.200
RCN-D04, Pressurizer Back-up Htrs Dist Panel	RCN-D03	NGN-L11C3	
RCN-HS-100-2, Proportional Htrs Bank	RCN-HS-100-1	NGN-L11C4	

Supply Breaker: NAN-S02F

Location: Auxiliary Building 120' Northwest Corner

Drawing: E-NGA-012

Examination Outline Cross-reference:	Level	RO		SRO
	Tier #	2		
	Group #	2		
	K/A #	014 K4.03		
	Importance Rating	3.2		
K/A: Rod Position Indication: Knowledge of RPIS design feature(s) and/or interlock(s) which provide for the following: Rod bottom lights				

Question 59

Rod bottom lights receive an input signal from individual rod ___(1)___ and the Upper Group Stop receives an input signal from ___(2)___ .

A. (1) reed switches
(2) reed switches

B. (1) reed switches
(2) pulse counters

C. (1) pulse counters
(2) reed switches

D. (1) pulse counters
(2) pulse counters

Answer: B

Explanation:

A. First part is correct. Second part is plausible since the reed switches provide an input to the Upper Electrical Limit, however the Upper Group Stop signal comes from the pulse counters.
B. Correct.
C. First part is plausible since the Lower Group Stop signal comes from the pulse counters, however the rod bottom lights receive an input signal from reed switches. Second part is plausible since the reed switches provide an input to the Upper Electrical Limit, however the Upper Group Stop signal comes from the pulse counters.
D. First part is plausible since the Lower Group Stop signal comes from the pulse counters, however the rod bottom lights receive an input signal from reed switches. Second part is correct.

Question Source:		**Bank**	
		Modified Bank	
	x	**New**	
		Previous NRC Exam	

Question Cognitive Level:	**x**	**Memory or Fundamental Knowledge**
		Comprehension or Analysis
	2	**Level of Difficulty**

10 CFR Part 55 Content:	**41.2**

Reference Provided:	**None**

Learning Objective:	Describe the function of the following signals to the CEDMCS: Rod bottom lights / Upper Group Stop

Technical Reference: CEDMCS Tech Manual

network mounted within a stainless steel tube. Two reed switches are wired in series and located every 1 ½ inches. In addition to the position reed switches, one pair of reed switches is positioned at the "0" step (rod drop), 1 step (lower electrical limit-LEL) and 200 step (upper electrical limit-UEL) levels. The rod drop, LEL, and UEL are connected in parallel. Each parallel pair is then wired independently to the connector at the top of the RSPT assembly. An additional pair of switches are located at approximately 203 steps to provide UEL backup.

The RSPTs provide CEA position to the following systems:

- CEDMCS
  a. Core mimic display (from dropped rod contact)
  b. To Plant Computer - to zero the pulse counters in the plant computer
  c. Individual rod position displayed on the CEDMCS operator's module. (UEL, LEL, contacts)
  d. CEA logic (UEL, LEL) to stop rods in manual individual or group motion.
- CEA Calculators (CEACs) - from voltage divider network
- Core Protection Calculators (CPC) - from voltage divider network

Technical Reference: CEDMCS Tech Manual

The pulses from the CEDMCS system send a position indication signal to the RJ system which in turn generates the Upper Group Stop (UGS) signal.

- Containment building HVAC (HC)

HC Provides the cooling to the CEA reed switch position transmitters and the CEA lift and hold coils.

- Plant monitoring system (RJ)

Develops UGS, LGS, SP, USL, LSL for CEDMCS

- Reactor regulating system (RRS)

CEA rate and direction signals to CEDMCS

Examination Outline Cross-reference:	Level	RO		SRO
	Tier #	2		
	Group #	2		
	K/A #	015 K5.05		
	Importance Rating	4.1		
K/A: Nuclear Instrumentation: Knowledge of the operational implications of the following concepts as they apply to the NIS: Criticality and its indications				

Question 60

Given the following conditions:

- A Reactor startup is in progress on Unit 1 per 40OP-9ZZ03, Reactor Startup
- The Reactor was at the - 50 pcm position following the previous CEA pull
- A CEA pull was just completed and counts are rising with a constant 0.3 DPM startup rate

Per 40OP-9ZZ03, Reactor Startup, the crew should determine that ___(1)___ and the Startup Channel NIs must be de-energized when ___(2)___ CPS is reached.

A. (1) the Reactor is critical
(2) 2,000

B. (1) the Reactor is critical
(2) 10,000

C. (1) MODE 2 has just been entered
(2) 2,000

D. (1) MODE 2 has just been entered
(2) 10,000

Answer: B

Explanation:

A. First part is correct. Second part is plausible because 2000 CPS was the limit for startup channels until all 3 units were modified to allow up to 10000 CPS (modification in 2015-2016).
B. Correct.
C. Plausible as MODE 2 is declared following the CEA pull which passes the – 500 pcm position, however the pull to criticality is generally at least 2-3 pulls after MODE 2 is entered. Second part is plausible because 2000 CPS was the limit for startup channels until all 3 units were modified to allow up to 10000 CPS (modification in 2015-2016).
D. Plausible as MODE 2 is declared following the CEA pull which passes the – 500 pcm position, however the pull to criticality is generally at least 2-3 pulls after MODE 2 is entered. Second part is correct.

Question Source:		**Bank**	
		Modified Bank	
	x	**New**	
		Previous NRC Exam	

Question Cognitive Level:		**Memory or Fundamental Knowledge**
	x	**Comprehension or Analysis**
	2	**Level of Difficulty**

10 CFR Part 55 Content:	**41.1**

Reference Provided:	**None**

Learning Objective:	Describe when the reactor is critical and the coordination between the RO and CRS in calling the reactor critical

Technical Reference: Reactor Startup Lesson Plan

Licensed Operator Initial Training **Page: 15 of 30**

Title: **Reactor Startup Classroom Lesson** **Lesson Plan #:** **NKASMC020306**

EO: 1.5 **Given a reactor startup in progress, describe when the reactor is critical and the coordination between the RO and CRS in calling the reactor critical in accordance with 40OP-9ZZ02 or 40OP-9ZZ03.**

Introduction

Recognizing criticality is an important skill for every member of the Control room team.

Main Idea

Criticality will be indicated by a steadily or exponentially increasing count rate/Reactor power with no CEA motion. SUR can be inferred by observing the power rise over time.

Technical Reference: 40AL-9RK4A, Panel B04A Alarm Responses

Point ID	Description	Setpoint
SEJS1	Start-Up Control Channel 1 Hi Counts Per Second	$1x10^4$ CPS
SEJS2	Start-Up Control Channel 2 Hi Counts Per Second	$1x10^4$ CPS

AUTOMATIC ACTION

- None

MANUAL ACTIONS

___ 1. **IF** this alarm is received during performance of a Reactor startup, **THEN** REFER TO the appendix for checking NI overlap and Turning off Startup Channels in ONE of the following procedures:

___ • 40OP-9ZZ02, Initial Reactor Startup Following Refuelings

___ • 40OP-9ZZ03, Reactor Startup

Technical Reference: 40OP-9ZZ03, Reactor Startup

___ M. Perform the following to withdraw CEAs:

___ 1. Monitor ALL of the following closely during withdrawal:

____ • Startup/Control Channel Recorders

____ • CEAPDS Video Display

____ • Log Power Recorders

____ • Log Power Meters

___ 2. Withdraw CEAs in Manual Sequential, as directed by the Reactivity Manager, to ONE of the following, whichever occurs first:

____ • Target CEA Position

____ • Current count rate doubles

___ 3. **IF** the High CPS alarm is received, **THEN** perform the following:

____ a) Complete the CEA withdrawal.

____ b) Perform Appendix D - Checking NI Overlap and Turning Off Startup Channels.

____ c) Direct Reactor Engineering to re-normalize the 1/M plot.

Technical Reference: 40OP-9ZZ03, Reactor Startup

As seen below, MODE 2 is declared following the CEA pull which raises power to greater than the -500 pcm position. Once the -500 pcm CEA position is reached, CEAs are withdrawn in pulls which is equal to ~ ½ of the required reactivity to reach the ACP (anticipated critical position) or when current count rate has doubled, whichever happens first. Generally, the CEA pull which brings the reactor critical is 2-3 pulls after the -500 pcm position (MODE 2 entry).

___ 4. **WHEN** CEAs have been withdrawn to the ECRP (-500) pcm position, **THEN** perform the following:

____ a) Declare the Unit in Mode 2.

____ b) Log Mode 2 entry in the Control Room log.

____ c) Ensure that MODE 2 has been selected on the Plant Mode Change Display Page for the CMC.

____ d) Ensure that MODE 2 has been selected on the Plant Mode Change Display Page for the PC.

___ 5. **WHEN** CEA withdrawal is stopped, **THEN** perform the following:

____ a) Allow count rate to stabilize.

____ b) Direct Reactor Engineering to perform a 1/M plot.

___ H. **IF** CEAs are positioned within 150 pcm of the ACP, **THEN** GO TO Step 6.4.10.

___ I. Record the amount of reactivity needed to achieve the current ACP:

Total reactivity required:_____ pcm

___ J. Record the maximum permissible incremental CEA withdrawal, which is the CEA Position that is equal to one-half of total reactivity required:

Target CEA Position: CEA Group_____ at _____inches withdrawn

Technical Reference: 40OP-9ZZ03, Reactor Startup

As seen in step H above, when the -150 pcm position is reached, GO TO step 6.4.10. Step 6.4.10 is below:

___ 6.4.10 Perform the following to withdraw the CEAs to critical:

NOTE

___ • It is anticipated that the Reactor will go critical within two CEA withdrawal sequences. However, evaluation of the 1/M may indicate that more than two withdrawal sequences may be the more prudent approach.

- Each CEA withdrawal sequence will insert no more than 100 pcm.
- At this point in the startup, count rate doubling is not a concern. Criticality is required to be anticipated, regardless of count rate response.
- It is anticipated that the Reactor will go critical with a 0.3 dpm startup rate.

Examination Outline Cross-reference:	Level	RO		SRO
	Tier #	2		
	Group #	2		
	K/A #	028 K6.01		
	Importance Rating	2.6		
K/A: Hydrogen Recombiner and Purge Control: Knowledge of the effect of a loss or malfunction on the following will have on the HRPS: Hydrogen recombiners				

Question 61

Given the following conditions:

- A Loss of Coolant Accident has occurred inside Containment on Unit 1
- Containment hydrogen concentration is 1.5%
- Containment pressure is 4.5 psig and slowly rising
- Both Hydrogen Recombiners are unavailable

What action should be taken to reduce Containment hydrogen levels?

A. Place the Hydrogen Purge Exhaust Unit in service

B. Place the Containment Refueling Purge subsystem in service

C. Ensure at least one full train of Containment Spray is in service

D. Place the Containment Power Access Purge subsystem in service

Answer: A

Explanation:

A. Correct.
B. Plausible as this action would reduce hydrogen levels inside containment, however this would result in an untreated release.
C. Plausible since containment spray helps to prevent local hydrogen pockets from accumulating, however containment spray is used for iodine removal.
D. Plausible as this action would reduce hydrogen levels inside containment, however this would result in an untreated release.

Question Source:	**x**	**Bank**	(stem modified to reduce potential for appeal but remains a bank question)
		Modified Bank	
		New	
	x	**Previous NRC Exam**	2009 NRC RO Exam

Question Cognitive Level:	**x**	**Memory or Fundamental Knowledge**
		Comprehension or Analysis
	3	**Level of Difficulty**

10 CFR Part 55 Content:	**41.9**

Reference Provided:	**None**

Learning Objective:	Discuss when the Hydrogen Recombiners are placed into and removed from service following a LOCA

Original Question:

2 MC Which one (if any) of the following actions should be taken to control containment hydrogen levels if no Hydrogen Recombiners are available during a Loss of Coolant Accident?

A. Place the Hydrogen Purge Exhaust unit in service.

B. Place the Containment Power Access Purge system in service.

C. No action required unless hydrogen concentration approaches 4%.

D. Ensure the Containment Spray system is in service and providing greater than 4350 gpm flow.

Answer: A

Technical Reference: 40EP-9EO03, Loss of Coolant Accident

INSTRUCTIONS	CONTINGENCY ACTIONS
✱ 67. **IF** the elapsed time from the start of the LOCA is between 2 and 3 hours, **AND ANY** of the following conditions exist: • RCS subcooling is less than 24°F [44°F], based on REP CET temperature • Pressurizer level is less than 10% [15%] • RVLMS indicates that the RVUH level is less than 16% **THEN** PERFORM Appendix 100, Hot Leg Injection.	
✱ 68. **IF BOTH** of the following conditions are met: • Containment hydrogen concentration is greater than 1.1% • Containment pressure is less than 8.5 psig (HCx-PI-351x, Narrow Range Containment Pressure) **THEN** PERFORM Appendix 19, Containment Hydrogen Control to operate the recombiners.	

Technical Reference: 40EP-9EO10, Standard Appendices

Appendix 19, Containment Hydrogen Control

INSTRUCTIONS	CONTINGENCY ACTIONS
____ 1. Evaluate the need or desirability to align a Recombiner for operation.	
____ 2. **IF** it is desired to align a Recombiner, **THEN** PERFORM **ANY** of the following: • Attachment 19-A, Recombiner A Alignment and Operation • Attachment 19-E, Recombiner B Alignment and Operation	
____ 3. **IF** no Recombiners are operating, **AND** Purge Exhaust is desired, **THEN** PERFORM Attachment 19-I, Purge Alignment and Operation.	

Attachment 19-I Purge Alignment and Operation Page 1 of 2

INSTRUCTIONS	CONTINGENCY ACTIONS
____ 1. Inform Chemistry and Radiation Protection that the Purge Exhaust Unit will be placed in service.	
____ 2. **Unit 2 or 3 only -** **IF** the Purge Unit is being installed in Unit 2 or 3, **THEN** request that Mechanical Maintenance PERFORM 31MT-9HP01, Hydrogen Recombiner Installation and Removal.	
____ 3. Direct an operator to PERFORM Attachment 19-J, Placing Purge Exhaust in Service.	

Examination Outline Cross-reference:	Level	RO		SRO
	Tier #	2		
	Group #	2		
	K/A #	056 A2.04		
	Importance Rating	2.6		
K/A: Condensate System: Ability to (a) predict the impacts of the following malfunctions or operations on the Condensate System ; and (b) based on those predictions, use procedures to correct, control, or mitigate the consequences of those malfunctions or operations: Loss of Condensate Pumps				

Question 62

Given the following condition:

- Unit 1 was operating at 100% power when the ‘A’ and ‘B’ Condensate Pumps tripped

(1) With NO operator action, the crew should expect an automatic trip of the…

(2) Per 40AO-9ZZ09, Reactor Power Cutback (Loss of Feedpump), if power is reduced to less than 50%, the Feed Flow input to COLSS must be selected to the…

A. (1) ‘A’ MFP
(2) Venturi position

B. (1) ‘A’ MFP
(2) Ultrasonic Flow Meter position

C. (1) ‘B’ MFP
(2) Venturi position

D. (1) ‘B’ MFP
(2) Ultrasonic Flow Meter position

Answer: C

Explanation:

A. First part is plausible since 'A' comes before 'B', therefore it would be logical for the 'A' MFP to trip before the 'B' MFP, however the 'B' MFP trips after a low suction trip has been in for 10 seconds and the 'A' MFP trips after 15 seconds. Second part is correct.
B. First part is plausible since 'A' comes before 'B', therefore it would be logical for the 'A' MFP to trip before the 'B' MFP, however the 'B' MFP trips after a low suction trip has been in for 10 seconds and the 'A' MFP trips after 15 seconds. Second part is plausible since the UFM is more sensitive and accurate and it could be thought that with less feed flow, a more accurate reading would be desired, however the UFM is more accurate at higher flowrates, therefore UFM is only procedurally allowed to be placed in service at power levels above 50%.
C. Correct.
D. First part is correct. Second part is plausible since the UFM is more sensitive and accurate and it could be thought that with less feed flow, a more accurate reading would be desired, however the UFM is more accurate at higher flowrates, therefore UFM is only procedurally allowed to be placed in service at power levels above 50%.

Question Source:		**Bank**	
		Modified Bank	
	x	**New**	
		Previous NRC Exam	

Question Cognitive Level:	**x**	**Memory or Fundamental Knowledge**
		Comprehension or Analysis
	3	**Level of Difficulty**

10 CFR Part 55 Content:	**41.4**

Reference Provided:	**None**

Learning Objective:	Describe how the Condensate system interfaces with the Feedwater system

Technical Reference: Feedwater Pump Turbine Tech Manual
The Steam Generator Feedwater Pumps trip on the following: • Overspeed at 6,350 RPM. • Low suction pressure of 255 psig after time delay, FWPT "A" 15 seconds, FWPT "B" 10 seconds. • High discharge pressure of 1845 psig. • Low vacuum in Main Condenser of 13.5" HgA. • Low control oil pressure to the Stop and Control Valve Operators (75 psig). • Active thrust bearing wear oil high pressure (40 psig). • Inactive thrust bearing wear oil high pressure (40 psig). • Feedwater pump bearing low oil pressure (4 psig). • Turbine bearing low oil pressure (4 psig). • Manual

Technical Reference: 40AO-9ZZ09, Reactor Power Cutback (Loss of Feedpump)

4.0 POST CUTBACK POWER REDUCTION

INSTRUCTIONS | CONTINGENCY ACTIONS

NOTE

The PSCEAs may be inserted further than 100 inches withdrawn during the power reduction if they still are capable of moving ASI to the bottom of the core.

____ 10. **WHEN** reactor power is less than 50% as indicated by NKBSCRAW (JSCALOR for backup),
THEN insert the PSCEAs to 100 inches withdrawn. (this reactivity equates to ~ 2% power at BOC thru EOC.

NOTE

Below 50% power, the Ultrasonic Flow Meter (UFM) can **NOT** be used to input to COLSS due to the large instrument uncertainties. Switching to the venturi position below 50% is required even if the venturi is **NOT** in service. If the venturi is **NOT** available, it will result in COLSS alarms, loss of JSCALOR, and having NKBDELT as the remaining COLSS power indication.

____ 11. **IF** power was reduced to less than 50% power,
THEN place SGN-HS-1189 in the "VENTURI" position.
(ZJN-C02E, behind B05)

Examination Outline Cross-reference:	Level	RO		SRO
	Tier #	2		
	Group #	2		
	K/A #	035 K1.14		
	Importance Rating	3.9		
K/A: Steam Generator: Knowledge of the physical connections and/or cause-effect relationships between the S/Gs and the following systems: ESF				

Question 63

SG Blowdown Containment Isolation Valves SGA-UV-500P/S and SGB-UV-500Q/R receive a close signal from which of the following ESFAS actuations?

1. AFAS
2. CIAS
3. SIAS

A. 1 and 2 ONLY

B. 1 and 3 ONLY

C. 2 and 3 ONLY

D. 1, 2, and 3

Answer: B

Explanation:

A. Plausible that SG Blowdown Isolation Valves would not close on an SIAS since a SIAS is generally in response to a loss of primary coolant inventory, however these valves close on an AFAS and SIAS.
B. Correct.
C. Plausible that SG Blowdown Isolation Valves would close on a CIAS since these are containment isolation valves, however they close on an AFAS and SIAS.
D. Plausible that SG Blowdown Isolation Valves would close on all 3 actuations, however they do not close on a CIAS (even though they are containment isolation valves)

Question Source:		**Bank**	
		Modified Bank	
	x	**New**	
		Previous NRC Exam	

Question Cognitive Level:	**x**	**Memory or Fundamental Knowledge**
		Comprehension or Analysis
	2	**Level of Difficulty**

10 CFR Part 55 Content:	**41.7**

Reference Provided:	**None**

Learning Objective:	Describe the automatic functions / interlocks associated with the Blowdown Containment Isolation Valves

Technical Reference: Main Steam Tech Manual

Blowdown Containment Isolation Valve Controls

One, three position (CLOSE/OPEN), spring return-to-normal control switch is provided for each blowdown line containment isolation valve. Each switch controls a three way solenoid valve in the air supply line. When momentarily placed in the OPEN position, the associated solenoid valve is energized to supply air to the isolation valve (if an automatic closure signal is not present). When momentarily placed in the CLOSE position, the associated solenoid is aligned to vent the isolation valve's actuator to atmosphere and isolate the air supply. The switch spring returns to the normal position.

The combined blowdown line containment isolation valves all fail closed on loss of IA and close upon receipt of AFAS-1, AFAS-2, MSIS, or SIAS. Following automatic closure, a control room operator can open the valves by momentarily moving their control switches to the CLOSE position and then to OPEN. White OVERRIDE lights are illuminated when the switches are moved to CLOSE, indicating the valves can be overridden.

Examination Outline Cross-reference:	Level	RO		SRO
	Tier #	2		
	Group #	2		
	K/A #	041 A4.08		
	Importance Rating	3.0		
K/A: Steam Dump/Turbine Bypass Control: Ability to manually operate and/or monitor in the control room: Steam dump valves				

Question 64

Given the following conditions:

- Unit 1 tripped from 100% power
- All SBCS Valves have an automatic permissive signal

Based on the provided indications, what is the current approximate position(s) of the SBCS Valves?

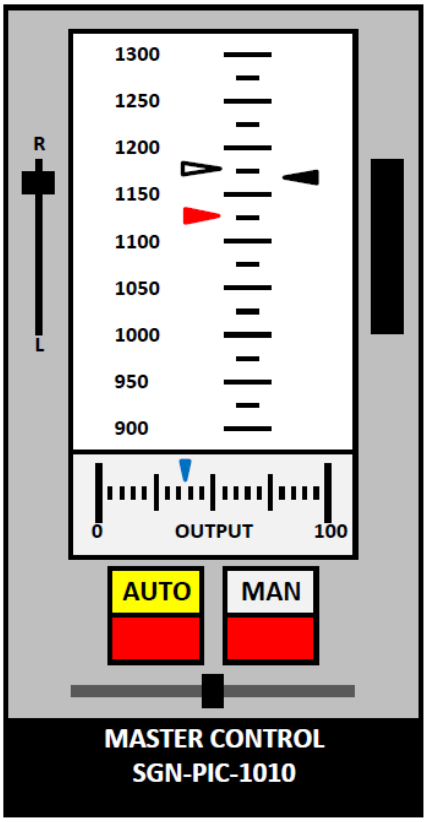

A. One valve fully open, one valve 50% open, six valves closed

B. One valve fully open, two valves 50% open, five valves closed

C. Two valves fully open, two valves 50% open, four valves closed

D. Three valves fully open, five valves closed

Answer: A

Explanation:

A. Correct.
B. Plausible since some valves open individually and some open in pairs, so if thought that 0-25% output opens one valve, and 25-50% output opens a pair of valves, this would be correct. However 0-25% output opens the first valve and 25-50% output opens the second valve. Valves don't open in pairs until 50-66.6% output, 66.6-83.3% and 83.3-100% output.
C. Plausible since some valves open individually and some open in pairs, so if thought that the first two valves each open fully with 12.5% output and the other three pairs each open over 25% output, this would be correct.
D. Plausible since there are eight SBCS valves and it is plausible that each would open sequentially with each 12.5% output, however the first two open fully over 25% each then in pairs over each sequential 16.6% in output.

Question Source:		**Bank**	
		Modified Bank	
	x	**New**	
		Previous NRC Exam	

Question Cognitive Level:		**Memory or Fundamental Knowledge**
	x	**Comprehension or Analysis**
	3	**Level of Difficulty**

10 CFR Part 55 Content:	**41.4**

Reference Provided:	**None**

Learning Objective:	Describe the Control Room controls associated with the SBCS Master Controller including its indications

Technical Reference: Steam Bypass Control System Tech Manual

With 37.5% output, HV-1001 will be full open and HV-1004 will be ~ 50% open.

Group	Valve	Position	Controller Output
1	HV-1001	0-100%	0-25%
2	HV-1004	0-100%	25-50%
3	HV-1003 & 1006	0-100%	50-66.7%
4	HV-1002 & 1005	0-100%	66.7-83.3%
5	HV-1007 & 1008	0-100%	83.3-100%

Examination Outline Cross-reference:	Level	RO		SRO
	Tier #	2		
	Group #	2		
	K/A #	072 A1.01		
	Importance Rating	3.4		
K/A: Area Radiation Monitoring: Ability to predict and/or monitor changes in parameters (to prevent exceeding design limits) associated with operating the ARM system controls including: Radiation levels				

Question 65

Given the following conditions:

- RU-145, Fuel Building Ventilation Low Range Gas monitor is in ALERT alarm
- RU-31, Spent Fuel Pool Area monitor is in HIGH Alarm

Which ONE of the following describes the plant response to the listed conditions?

A. Both FBEVAS and CREFAS actuated DIRECTLY from the HIGH alarm on RU-31

B. FBEVAS actuated on RU-31 HIGH Alarm, and CREFAS actuated on cross-trip

C. CREFAS actuated on RU-31 HIGH Alarm, and FBEVAS actuated on cross-trip

D. FBEVAS actuated on RU-31 HIGH Alarm, CREFAS actuated on the RU-145 ALERT alarm

Answer: B

Explanation:

A. Plausible if assumed that both CREFAS and FBEVAS are actuated from a HIGH ALARM on RU-31, but a HIGH ALARM will trip CREFAS through a cross-trip
B. Correct.
C. Plausible if assumed that RU-31 will actuate CREFAS and then cross-trip FBEVAS, but actually the opposite is true
D. First half of the answer is true, and the second half is plausible if it is believed that RU-145 trips on ALERT alarm and will cause a CREFAS.

Question Source:	**x**	**Bank**	
		Modified Bank	
		New	
	x	**Previous NRC Exam**	2010 RO Exam

Question Cognitive Level:		**Memory or Fundamental Knowledge**
	x	**Comprehension or Analysis**
	3	**Level of Difficulty**

10 CFR Part 55 Content:	**41.11**

Reference Provided:	**None**

Learning Objective:	Describe how the BOP ESFAS system is supported by the Radiation Monitoring System

Technical Reference: Radiation Monitoring Tech Manual

2.28 Fuel Pool Area Monitor, (FPAA) SQA-RU-31

The FPAA radiation monitor continuously monitors radiation levels on the fuel pool area of the fuel building. The primary function of this monitor is to provide engineered safety feature actuation on high-high alarm isolating the normal fuel building ventilation and initiating the fuel building essential ventilation actuation signal (FBEVAS). Redundancy and diversity are provided by the fuel building ventilation exhaust monitor (FBLR). This monitor meets the requirements of 10CFR70.24 and regulatory guides 1.13 and 8.12. The monitor has a local indication and alarm module. This function warns of abnormal radiation levels thus providing for protective actions (see drawing 13-M-HFP-001).

Technical specifications apply. Required monitor features for operability are the area monitor itself, its associated ESF actuation capability, and local indication and alarm.

Technical Reference: BOP ESFAS Tech Manual

1.2.1 Fuel Building Essential Ventilation Actuation Signal (FBEVAS)

Radioactive contamination may occur in the spent fuel area in the event that a spent fuel element is severely damaged during handling. If a fuel handling accident occurs, sensors in the fuel building detect the fission products released from the fuel and initiate appropriate action to reduce the release of fission products into the environment.

The fuel building essential ventilation system is automatically actuated by a FBEVAS. The FBEVAS is initiated by one-out-of-two high airborne activity signals from radiation monitors, one of which is a gaseous monitor in the fuel building normal exhaust duct (RU-145), and the other of which is an area radiation monitor mounted on a wall overlooking the spent fuel pool (RU-31).

Automatic actuation of either FBEVAS train will cause a cross-trip of the other FBEVAS train and a cross trip of both trains of the control room essential filtration system (CREFAS).

The FBEVAS signal may also be manually initiated from control room panel B05 (single train actuation) or from by a FBEVAS module test/actuation at the BOP-ESFAS cabinet (both trains actuate) (figure A-1).

The FBEVAS is combined with the safety injection actuation signal (SIAS) in the device control circuits so either signal (logical OR) activates the appropriate devices. During SIAS operations, the fuel building/auxiliary building essential ventilation system is aligned to exhaust from the auxiliary building. The SIAS signal takes precedence over FBEVAS should both signals be present at the same time.

Examination Outline Cross-reference:	Level	RO		SRO
	Tier #	3		
	Group #			
	K/A #	G 2.1.21		
	Importance Rating	3.5		
K/A: Ability to verify the controlled procedure copy				

Question 66

Which of the following are approved methods of verifying the current revision of a procedure per 01DP-0AP09, Procedure and Work Instruction Use and Adherence?

1. Verify the current revision electronically using eProc
2. Verify the current revision electronically using SWMS
3. Verify the current revision by comparing to a controlled copy of the procedure

A. 1 and 2 ONLY

B. 1 and 3 ONLY

C. 2 and 3 ONLY

D. 1, 2 and 3

Answer: D

Explanation:

A. Plausible that comparing to a controlled copy would not be allowed since controlled copies are updated the day of issuance creating a slight time delay between a new revision being issued electronically and the hard copy being updated in the controlled library, however comparison to the controlled copy is an allowed method of verifying the current revision.
B. Plausible that SWMS would not be an allowed method since SWMS contains all current and previous revisions of procedures, which could pose an HU issue since multiple revisions of a procedure are available in SWMS, however SWMS is an allowed method of verifying the current revision.
C. Plausible that eProc would not be an allowed method since eProc does not contain any TAPAs or administrative holds for a procedure, however eProc is an allowed method of verifying the current revision.
D. Correct.

Question Source:		**Bank**	
		Modified Bank	
	x	**New**	
		Previous NRC Exam	

Question Cognitive Level:	**x**	**Memory or Fundamental Knowledge**
		Comprehension or Analysis
	2	**Level of Difficulty**

10 CFR Part 55 Content:	**41.10**

Reference Provided:	**None**

Learning Objective:	Describe procedure use requirements

Technical Reference: 01DP-0AP09, Procedure and Work Instruction Use and Adherence

4.4 Preparation for Continuous and Reference Use Performance

4.4.1 To ensure that personnel use the current revision and abide by the prescribed use level during the task, the following requirements apply to the preparation for procedure or work instruction performance:

NOTE

This verification may be electronic or by comparison to a controlled copy, as directed by site policy.

A. Prior to starting the task, the user shall verify that the currently approved revision of the procedure or work instruction, with approved changes, is being used.

1. All procedures are to be verified prior to use by accessing the controlled source (SWMS-DMX or eProc) to perform the following:

- Ensuring the latest approved revision is in use.
- Ensuring applicable active TAPAs are identified.
- Determining whether there is an Administrative Hold against the procedure.

Examination Outline Cross-reference:	Level	RO		SRO
	Tier #	3		
	Group #			
	K/A #	G 2.1.23		
	Importance Rating	4.3		
K/A: Ability to perform specific system and integrated plant procedures during all modes of plant operation				

Question 67

(1) When a procedure says, “CHECK that the pump is running”, the word “CHECK” means to check that the pump is running, and if not, …

(2) When a procedure says, “PERFORM 40OP-9XX01”, the word “PERFORM” means to…

A. (1) attempt to start it.
(2) exit the procedure in use and perform 40OP-9XX01.

B. (1) attempt to start it.
(2) perform 40OP-9XX01 concurrently with the procedure in use.

C. (1) do not attempt to start it.
(2) exit the procedure in use and perform 40OP-9XX01.

D. (1) do not attempt to start it.
(2) perform 40OP-9XX01 concurrently with the procedure in use.

Answer: D

Explanation:

A. First part is plausible as this is true for “ENSURE”, however if the action verb is “CHECK”, the operator should not take action to start it until directed by supervision. Second part is plausible as this is true for “GO TO”, however “PERFORM” means to perform both procedures in parallel.
B. First part is plausible as this is true for “ENSURE”, however if the action verb is “CHECK”, the operator should not take action to start it until directed by supervision. Second part is correct.
C. First part is correct. Second part is plausible as this is true for “GO TO”, however “PERFORM” means to perform both procedures in parallel.
D. Correct.

Question Source:		**Bank**	
		Modified Bank	
	x	**New**	
		Previous NRC Exam	

Question Cognitive Level:	**x**	**Memory or Fundamental Knowledge**
		Comprehension or Analysis
	2	**Level of Difficulty**

10 CFR Part 55 Content:	**41.10**

Reference Provided:	**None**

Learning Objective:	Describe procedure use requirements

Technical Reference: 01DP-0AP09, Procedure and Work Instruction Use and Adherence

4.10 Check/Verify/Ensure Use

4.10.1 The words 'Check' and 'Verify' are used to indicate the condition is evaluated.

- The performer does not take action to make the condition true.
- If the condition is other than what is being checked or verified, then STOP and involve supervision, as described in Step 4.12.7 of this procedure.

4.10.2 The word 'Ensure' is used to indicate the condition is evaluated, and the performer should take action to make the condition true if it is not.

Technical Reference: 01DP-0AP09, Procedure and Work Instruction Use and Adherence

4.3.5 Branch, Reference, and Transition Between Procedures and Work Instructions

NOTE

The instruction or words "GO TO" is used for branching.

A. Branching is used to transition to another series of steps in the same document or a different document without returning to the current document or step.

NOTE

The terms "REFER TO," "PER," or "PERFORM" are used for referencing.

B. Referencing is used to perform steps or sections within the same document or a different document or section in another set of written instructions and then return to the point from which they were referenced to complete the task or activity.

Examination Outline Cross-reference:	Level	RO		SRO
	Tier #	3		
	Group #			
	K/A #	G 2.1.34		
	Importance Rating	2.7		
K/A: Knowledge of primary and secondary plant chemistry limits				

Question 68

Given the following conditions:

- Unit 2 is operating at 100% power
- A condenser tube leak is in progress
- The CRS has entered 40AO-9ZZ10, Condenser Tube Rupture

Per 40AO-9ZZ10, Condenser Tube Rupture, which of the following secondary chemistry parameters, individually, require a manual Reactor trip?

1. 25 ppm Sodium in a Condenser Hotwell
2. 2 ppm Sulfates in a Steam Generator with a corresponding rise in Cation Conductivity
3. 10 µmho/cm Cation Conductivity in a Steam Generator with a corresponding rise in Sodium

A. 1 ONLY

B. 2 ONLY

C. 1 and 3 ONLY

D. 2 and 3 ONLY

Answer: B

Explanation:

A. Plausible since 25 ppm in the condenser hotwell is more than 15 times the entry condition limit for hotwell sodium, however a reactor trip is not required until > 35 ppm in the hotwell.
B. Correct..
C. Plausible since 25 ppm in the condenser hotwell is more than 15 times the entry condition limit for hotwell sodium, however a reactor trip is not required until > 35 ppm in the hotwell. Also plausible since elevated conductivity in the SG requires a reactor trip, however not until 15 µmho/cm.
D. Plausible since 2 ppm sulfates in the SG is correct, however elevated conductivity in the SG doesn't require a reactor trip until 15 µmho/cm.

Question Source:		**Bank**	
	x	**Modified Bank**	
		New	
	x	**Previous NRC Exam**	(modified from 2016 RO Exam)

Question Cognitive Level:	**x**	**Memory or Fundamental Knowledge**
		Comprehension or Analysis
	3	**Level of Difficulty**

10 CFR Part 55 Content:	**41.4**

Reference Provided:	**None**

Learning Objective:	Determine if a reactor trip is necessary and if so, what actions are required after the trip

Technical Reference: 40AO-9ZZ10, Condenser Tube Rupture
7. **IF ANY** of the following Steam Generator trip values are exceeded or trending to a trip value prior to completing a rapid downpower: • Sodium 1.0 ppm (1000 ppb) or more with a corresponding rise in Cation Conductivity, • Sulfates 1.0 ppm (1000 ppb) or more with a corresponding rise in Cation Conductivity, • Chloride 1.0 ppm (1000 ppb) or more with a corresponding rise in Cation Conductivity, • Cation Conductivity 15 µmho/cm or more with a corresponding rise in Sodium, Sulfates or Chlorides, **THEN** perform the following: a. Ensure reactor is tripped.

Technical Reference: 40AO-9ZZ10, Condenser Tube Rupture
8. **IF** Condenser Hotwell sodium (Local Indication) exceeds 35 ppm (35,000 ppb) or more, **THEN** perform the following: a. Ensure reactor is tripped.

Examination Outline Cross-reference:	Level	RO		SRO
	Tier #	3		
	Group #			
	K/A #	G 2.2.6		
	Importance Rating	3.0		
K/A: Knowledge of the process for making changes to procedures				

Question 69

During the performance of an ARP, it is determined that immediate clarification is needed for a step which, if performed as written, could result in an HU error.

The ARP step should be clarified using a(n) ___(1)___ and following approval of this clarification, an Independent Quality Review (IQR) must be completed within a MAXIMUM of ___(2)___ days.

A. (1) TAPA
(2) 4

B. (1) TAPA
(2) 14

C. (1) Administrative Change
(2) 4

D. (1) Administrative Change
(2) 14

Answer: B

Explanation:

A. First part is correct. Second part is plausible since 4 days is the time limit for an IQR on a minor procedure change, however it is 14 days for a TAPA.
B. Correct.
C. First part is plausible since administrative changes are used for changes which do not constitute a change to the technical content of a procedure, however administrative changes cannot be used to affect the method of performing work or the way systems and components are controlled or operated. Second part is plausible since 4 days is the time limit for an IQR on a minor procedure change, however it is 14 days for a TAPA.
D. First part is plausible since administrative changes are used for changes which do not constitute a change to the technical content of a procedure, however administrative changes cannot be used to affect the method of performing work or the way systems and components are controlled or operated. Second part is correct.

Question Source:		**Bank**	
		Modified Bank	
	x	**New**	
		Previous NRC Exam	

Question Cognitive Level:	**x**	**Memory or Fundamental Knowledge**
		Comprehension or Analysis
	2	**Level of Difficulty**

10 CFR Part 55 Content:	**41.10**

Reference Provided:	**None**

Learning Objective:	Describe the process for generating a TAPA

Technical Reference: 01DP-0AP01, Procedure Process

4.10 Temporary Approved Procedure Action

NOTE

01DP-0AP01-03, Temporary Approved Procedure Action (TAPA) Process Administrative Guideline, provides details for the TAPA process.

4.10.1 A TAPA may be used when an expeditious procedure change is needed for any of the following types of situations:

- The procedure deficiency will cause a stop in work
- An interim action is needed for equipment failure
- An interim action is needed for a human performance error
- Immediate, interim clarification is needed for an Abnormal Operating Procedure or Operations Alarm Response Procedure

Technical Reference: 01DP-0AP01, Procedure Process

3.1 **Administrative Change —** An Administrative change is one that does not change the purpose or scope and does not constitute a change to the technical content or performance of a document. Administrative Changes do not affect a process or the method of performing work; cannot affect the way Structures, Systems, or Components (SSCs) are designed, operated, or controlled; cannot change technical information or the sequence of equipment operation; do not correct errors in setpoints, measurements, or acceptance criteria.

Technical Reference: 01DP-0AP01, Procedure Process

A. Obtain an IQR review and Procedure Owner approval of the TAPA within 14 days of being approved for interim use.

Technical Reference: 01DP-0AP01, Procedure Process

Table 1: Procedure Review

	Type of Change				
Reviewer	New	Major	Supersede or Cancel	Minor	Procedures Requiring a Review
Subject Matter Expert	8 working days	8 working days	As determined by preparer	4 working days *	All *
Cross-Organization	8 working days	8 working days	8 working days	4 working days	Per 01DP-0AP01, App G
Validation	8 working days	8 working days	Not required	Not required	Per 01DP-0AP01, App E and 4.4.9
Independent Qualified Review	8 working days	8 working days	8 working days	4 working days	All
Procedure Review Group	Submit 1 week before PRG meeting	Submit 1 week before PRG meeting	Submit 1 week before PRG meeting	May be exempted **	Interdepartmental Process, Interdepartmental Standards

Examination Outline Cross-reference:	Level	RO		SRO
	Tier #	3		
	Group #			
	K/A #	G 2.2.40		
	Importance Rating	3.4		
K/A: Ability to apply Technical Specifications for a system				

Question 70

Per Technical Specifications section 2.0, Safety Limits, the MAXIMUM allowable RCS Pressure is ___(1)___ psia, and if this limit is exceeded in MODE 3, compliance must be restored within a MAXIMUM of ___(2)___ .

A. (1) 2500
(2) 5 minutes

B. (1) 2500
(2) 1 hour

C. (1) 2750
(2) 5 minutes

D. (1) 2750
(2) 1 hour

Answer: C

Explanation:

A. First part is plausible since 2500 psia is the lift setpoint for the Pressurizer Safety Valves, however the safety limit is 2750 psia. Second part is correct.
B. First part is plausible since 2500 psia is the lift setpoint for the Pressurizer Safety Valves, however the safety limit is 2750 psia. Second part is plausible since this is the completion time for MODES 1 and 2, however in MODE 3, the completion time is 5 minutes.
C. Correct.
D. First part is correct. Second part is plausible since this is the completion time for MODES 1 and 2, however in MODE 3, the completion time is 5 minutes.

Question Source:		**Bank**	
		Modified Bank	
	x	**New**	
		Previous NRC Exam	

Question Cognitive Level:	**x**	**Memory or Fundamental Knowledge**
		Comprehension or Analysis
	3	**Level of Difficulty**

10 CFR Part 55 Content:	**41.10**

Reference Provided:	**None**

Learning Objective:	State what actions are required (1 hour or less) upon a SL violation

Technical Reference: Technical Specifications

2.0 SAFETY LIMITS (SLs)

2.1 SLs

2.1.1 Reactor Core SLs

2.1.1.1 In MODES 1 and 2, Departure from Nucleate Boiling Ratio (DNBR) shall be maintained at ≥ 1.34.

2.1.1.2 In MODES 1 and 2, the peak fuel centerline temperature shall be maintained < 5080°F (decreasing by 58°F per 10,000 MWD/MTU for burnup and adjusting for burnable poisons per CENPD-382-P-A).

2.1.2 Reactor Coolant System (RCS) Pressure SL

In MODES 1, 2, 3, 4, and 5, the RCS pressure shall be maintained at ≤ 2750 psia.

2.2 SL Violations

2.2.1 If SL 2.1.1.1 or SL 2.1.1.2 is violated, restore compliance and be in MODE 3 within 1 hour.

2.2.2 If SL 2.1.2 is violated:

2.2.2.1 In MODE 1 or 2, restore compliance and be in MODE 3 within 1 hour.

2.2.2.2 In MODE 3, 4, or 5, restore compliance within 5 minutes.

Examination Outline Cross-reference:	Level	RO		SRO
	Tier #	3		
	Group #			
	K/A #	G 2.2.43		
	Importance Rating	3.0		
K/A: Knowledge of the process used to track inoperable alarms				

Question 71

Per 40DP-9OP15, Operator Challenges and Discrepancy Tracking, Control Room annunciators which are jumpered out shall be marked by placing a(n) _____ on the affected annunciator window.

A. blue dot

B. orange dot

C. pink label

D. white label

Answer: B

Explanation:

A. Plausible since blue dots are used on the control boards to indicate equipment status, however the blue dots are used to indicate normal component positions during MODES 1 and 2.
B. Correct.
C. Plausible since pink labels are used to indicate protected equipment as well as to flag equipment when in an out of normal state (star it tags), however not for jumpered annunciator windows.
D. Plausible since white labels are used on control boards to indicate specific plant/equipment status, however jumpered annunciators are marked with an orange dot.

Question Source:		**Bank**	
		Modified Bank	
	X	**New**	
		Previous NRC Exam	

Question Cognitive Level:	**x**	**Memory or Fundamental Knowledge**
		Comprehension or Analysis
	2	**Level of Difficulty**

10 CFR Part 55 Content:	**41.10**

Reference Provided:	**None**

Learning Objective:	State the responsibilities of Operations Personnel involving System Status Control

Technical Reference: 40DP-9OP15, Operator Challenges and Discrepancy Tracking

4.2.6.8 When the determination has been made to jumper an annunciator and the annunciator does not have a CRDL already assigned for the discrepancy, then the jumper work order does not need a CRDL generated. Jumpers are tracked by the SWMS Operations Trend Code.

4.2.6.9 When a jumper has been installed, place an international orange dot on the window for the annunciator that is jumpered.

Technical Reference: 40DP-9OP14, Control of Operator Informational Aids

4.3 Blue Dot Recognition

NOTE

Human Factors Engineering Analysis has supported the concept of "pattern recognition." Pattern recognition is the learning process which uses the ability to look at a condition and a set of indicators on a panel, then to discern the normal condition with nothing out of position.

4.3.1 The Blue dot signifies normal, Mode 1 and 2 system line-up position. For example, if a valve should be open for normal system line-up, then the blue dot would be located on the red open indication on the handswitch for that component.

Technical Reference: 40DP-9OP14, Control of Operator Informational Aids

4.5.2 White magnetic nameplates or strips may be used on the Main Control Boards by the operators to write information pertaining to plant status.

4.5.2.1 White magnetic nameplates or strips are used to enhance the ability of operators to scan control boards and determine status of components.

4.5.2.2 Due to the size and portability of the magnetic nameplates or strips, identification labels are not required.

Technical Reference: 40DP-9OP02, Conduct of Shift Operations
The STAR IT labels are pink. 4.7.11.5 "STAR IT" flags, magnetic labels, switch covers, stickers, etc. can be used as flagging devices. The following examples are provided: • A "Star It" device may be placed next to the controls used while synchronizing a Diesel Generator to the grid. • A "Star It" device may be placed next to a controller that has been placed in manual. • Flagging the Increase Load pushbutton and SBCVs during a Turbine Sync evolution.

Examination Outline Cross-reference:	Level	RO		SRO
	Tier #	3		
	Group #			
	K/A #	G 2.3.14		
	Importance Rating	3.4		
K/A: Knowledge of radiation or contamination hazards that may arise during normal, abnormal, or emergency conditions or activities				

Question 72

Containment is considered to be HARSH when Containment radiation levels exceed a MINIMUM of ___(1)___ and the preferred instrumentation used to determine if Containment is harsh due to radiation levels are ___(2)___ .

A. (1) 1×10^3 mrem/hr
(2) Primary Coolant Activity Monitors RU-150 and RU-151

B. (1) 1×10^3 mrem/hr
(2) Containment High Range Area Monitors RU-148 and RU-149

C. (1) 1×10^8 mrem/hr
(2) Primary Coolant Activity Monitors RU-150 and RU-151

D. (1) 1×10^8 mrem/hr
(2) Containment High Range Area Monitors RU-148 and RU-149

Answer: D

Explanation:

A. First part is plausible since this is the minimum radiation level for posting an area as a Locked High Radiation Area, however 1 x 10^8 mrem/hr is the minimum rad level for harsh containment. Second part is plausible since the purpose of RU-150 and RU-151 is to assess the primary coolant activity levels during post accident conditions, however for determining harsh containment, RU-148 and RU-149 are preferred.
B. First part is plausible since this is the minimum radiation level for posting an area as a Locked High Radiation Area, however 1 x 10^8 mrem/hr is the minimum rad level for harsh containment. Second part is correct.
C. First part is correct. Second part is plausible since the purpose of RU-150 and RU-151 is to assess the primary coolant activity levels during post accident conditions, however for determining harsh containment, RU-148 and RU-149 are preferred.
D. Correct.

Question Source:		**Bank**	
		Modified Bank	
	x	**New**	
		Previous NRC Exam	

Question Cognitive Level:	**x**	**Memory or Fundamental Knowledge**
		Comprehension or Analysis
	2	**Level of Difficulty**

10 CFR Part 55 Content:	**41.9**

Reference Provided:	**None**

Learning Objective:	Analyze whether or not harsh containment conditions exist

Technical Reference: 40EP-9EO03, Loss of Coolant Accident

PALO VERDE NUCLEAR GENERATING STATION | 40EP-9EO03 Revision 43

LOSS OF COOLANT ACCIDENT | Page 3 of 78

3.0 INSTRUCTIONS/CONTINGENCY ACTIONS

INSTRUCTIONS | CONTINGENCY ACTIONS

---------- NOTE ----------

Harsh conditions are containment temperature greater than 170°F or containment radiation level greater than 10^8 mR/hr. Harsh containment values are placed in brackets next to the normal setpoint or band.

Technical Reference: EOP Operations Expectations

PALO VERDE NUCLEAR GENERATING STATION | Revision 27

EOP OPERATIONS EXPECTATIONS | Page 12 of 50

6.0 LOSS OF COOLANT ACCIDENT (LOCA)

LOCA NOTE preceding Step 1

1. As soon as the CRS enters Section 3.0, harsh containment criteria should be checked. Once harsh containment conditions are recognized, it should be communicated to the control room staff in order to use the bracketed numbers, where provided.
2. If bracketed values are being used due to high Containment temperature, the normal values can be used once the temperature returns to less than the harsh setpoint. If bracketed values are being used due to high Containment radiation levels, the harsh values should continue to be used until the instruments can be evaluated by Engineering.

   The preferred instrumentation for determining harsh containment conditions due to high radiation levels is RU-148 and RU-149 for containment radiation levels.

Examination Outline Cross-reference:	Level	RO		SRO
	Tier #	3		
	Group #			
	K/A #	G 2.3.15		
	Importance Rating	2.9		
K/A: Knowledge of radiation monitoring systems, such as fixed radiation monitors and alarms, portable survey instruments, personnel monitoring equipment, etc.				

Question 73

Which of the following personal dosimetry devices are REQUIRED to be worn in order to enter the Unit 2 Turbine Building?

1. Dosimeter of Legal Record (DLR)
2. Self-Reading Dosimeter (SRD)
3. iPAM-Tx External Alarming Device

A. 1 ONLY

B. 2 ONLY

C. 1 and 3 ONLY

D. 2 and 3 ONLY

Answer: A

Explanation:

A. Correct.
B. Plausible as only one dosimeter is required to enter the turbine building and since the Turbine Building is outside of the RCA and Control Building, it is plausible that the SRD (which measures gamma and beta radiation) would be used instead of a DLR (which measures gamma, beta, and neutron radiation).
C. Plausible since DLR is correct and an iPAM is used in high-noise areas (which the Turbine Building is), however the iPAM is only required in high noise areas in the RCA.
D. Plausible as only one dosimeter is required to enter the turbine building and since the Turbine Building is outside of the RCA and Control Building, it is plausible that the SRD (which measures gamma and beta radiation) would be used instead of a DLR (which measures gamma, beta, and neutron radiation). iPAM is plausible since an iPAM is used in high-noise areas (which the Turbine Building is), however the iPAM is only required in high noise areas in the RCA.

Question Source:		**Bank**	
		Modified Bank	
	x	**New**	
		Previous NRC Exam	

Question Cognitive Level:	**x**	**Memory or Fundamental Knowledge**
		Comprehension or Analysis
	2	**Level of Difficulty**

10 CFR Part 55 Content:	**41.12**

Reference Provided:	**None**

Learning Objective:	Demonstrate mastery of Routine Shift Operations

Technical Reference: 75DP-9RP01, Radiation Exposure and Access Control
4.5 Restricted Area Access and Egress 4.5.1 Personnel issued a DLR are required to wear the DLR at all times while in Restricted Area.

Technical Reference: 75DP-9RP01, Radiation Exposure and Access Control
The Turbine Building is inside the restricted area (overlaps with the Protected Area) 3.24 **Restricted Area —** An area, access to which is limited by the licensee for the purpose of protecting individuals against undue risks from exposure to radiation and radioactive materials. The Restricted Area does not include areas used as residential quarters, but separate rooms in a residential building may be set apart as a Restricted Area. At PVNGS, the permanent restricted area boundary coincides with the security protected area boundary. Satellite or temporary Restricted Areas may also need to be established outside the permanent Restricted Area.

Technical Reference: 75DP-9RP01, Radiation Exposure and Access Control
4.6 Radiologically Controlled Area Entry 4.6.1 The RP requirements for unescorted entry into an RCA are: • DLR and SRD

Technical Reference: 75RP-9ME27, High Noise Area EPDs

6.1 iPam-Tx Issue Requirements

6.1.1 The following additional dose control measures should be utilized when a worker is wearing an External Alarming Device:

- More frequent monitoring of secondary dosimetry.
- Reduced stay times in high noise/high radiation work areas.
- Dosimetry devices should be worn in a manner that allows the worker to self-monitor their exposure.

6.1.2 An External Alarming Device shall be issued with EPDs to:

6.1.2.1 Hearing impaired workers.

6.1.2.2 Workers in High Radiation Areas when the worker's ability to hear an EPD alarm might be impaired by:

- Ambient noise levels
- Wearing hearing protection
- Wearing an audio headset that covers both ears.

Examination Outline Cross-reference:	Level	RO		SRO
	Tier #	3		
	Group #			
	K/A #	G 2.4.1		
	Importance Rating	4.6		
K/A: Knowledge of EOP entry conditions and immediate action steps				

Question 74

Given the following conditions:

- Unit 2 was in MODE 2 when the Reactor automatically tripped on low SG pressure
- MSIS did not automatically actuate

Per 40DP-9OP02, Conduct of Operations, CRS authorization ___(1)___ required before manually initiating MSIS, and SPTAs ___(2)___ required to be completed prior to transitioning to the optimal EOP.

A. (1) IS
(2) ARE

B. (1) IS
(2) are NOT

C. (1) is NOT
(2) ARE

D. (1) is NOT
(2) are NOT

Answer: C

Explanation:

A. First part is plausible since ensuring MSIS has actuated when SG pressure is below the MSIS setpoint is a contingency action in SPTAs, and CRS authorization is required prior to taking contingency actions in SPTAs, however an exception is made for ESFAS actuations which failed to auto actuate. Second part is correct.
B. First part is plausible since ensuring MSIS has actuated when SG pressure is below the MSIS setpoint is a contingency action in SPTAs, and CRS authorization is required prior to taking contingency actions in SPTAs, however an exception is made for ESFAS actuations which failed to auto actuate. Second part is plausible since direct entry to the optimal EOP is allowed if the event initiated from MODE 3 or 4, however since the unit was in MODE 2, SPTAs are required to be completed prior to entry into the optimal EOP.
C. Correct.
D. First part is correct. Second part is plausible since direct entry to the optimal EOP is allowed if the event initiated from MODE 3 or 4, however since the unit was in MODE 2, SPTAs are required to be completed prior to entry into the optimal EOP.

Question Source:		**Bank**	
		Modified Bank	
	x	**New**	
		Previous NRC Exam	

Question Cognitive Level:	**x**	**Memory or Fundamental Knowledge**
		Comprehension or Analysis
	3	**Level of Difficulty**

10 CFR Part 55 Content:	**41.10**

Reference Provided:	**None**

Learning Objective:	Analyze whether or not entry into the SPTAs is appropriate

Technical Reference: 40DP-9OP02, Conduct of Operations

- Procedure 72IC-9RX03, Core Reloading also contains specific guidance on conditions which require suspension of fuel loading activities.
- Additional responsibilities are defined in procedure 40OP-9ZZ23, Outage GOP. (9ZZ23 does not contain additional responsibilities in Section 2.0 for this position.)
- Responsible to the Shift Manager for directly supervising core alterations and specific evolutions or work activities that could result in core alterations.

2.8 Reactor Operator

- Maintains ownership and accountability of the control boards.
- Operates plant controls as directed by the Control Room Supervisor or Shift Manager per approved procedures and Technical Specifications.
- Obtains concurrence or direction from the Control Room Supervisor for performance of evolutions.
- Maintains a questioning attitude, understands the methodologies of human performance tools and effectively utilizes them to avoid errors.
- Monitors parameters and responds to abnormal indications until corrected or verified to be false.
- The "Operator At The Controls" is responsible for positive control of components that directly impact core reactivity.
- Initiates a load reduction if conditions indicate a load reduction is necessary to prevent a Unit trip or exceeding limits.
- Manually trips the reactor if Reactor Protection System trip setpoints have been exceeded and a trip has not occurred. Expected performance is to detect and verify the condition, then notify other Control Room personnel of the condition (using update or focused communication) while taking immediate action to trip the reactor.

Technical Reference: 40DP-9OP02, Conduct of Operations

PVNGS NUCLEAR ADMINISTRATIVE AND TECHNICAL MANUAL Page 17 of 165

Conduct of Operations	40DP-9OP02	Revision 72

- Manually initiates Engineered Safety Features if automatic Engineered Safety Feature setpoints are exceeded. Expected performance is to detect and verify the condition, then notify other Control Room personnel of the condition (using update or focused communication) while taking immediate action to initiate actuation.

Technical Reference: 40EP-9EO05, Excess Steam Demand

PALO VERDE NUCLEAR GENERATING STATION | **40EP-9EO05** **Revision 33**

EXCESS STEAM DEMAND | **Page 2 of 46**

1.0 ENTRY CONDITIONS

1. The Standard Post Trip Actions have been performed.

   or

   BOTH of the following conditions exist:

   - An ESD initiated from Mode 3 or Mode 4,
   - LTOP is **NOT** in service.

   and

2. Plant conditions indicate that an Excess Steam Demand has occurred. **ANY** or all of the following may be present or have occurred:

   - Loud noise indicative of a high energy line break or stuck open MSSV
   - Lowering RCS temperature caused by a rise in RCS heat removal (steam line break)
   - Rising RCS temperature caused by a reduction in RCS heat removal (feed line break)
   - Rise in feedwater flow until main feedwater isolation valves are closed by the MSIS
   - Possible rise in containment temperature, pressure, humidity, and sump level.

Examination Outline Cross-reference:	Level	RO		SRO
	Tier #	3		
	Group #			
	K/A #	G 2.4.21		
	Importance Rating	4.0		
K/A: Knowledge of the parameters and logic used to assess the status of safety functions, such as reactivity control, core cooling and heat removal, reactor coolant system integrity, containment conditions, radioactivity release control, etc.				

Question 75

How are the following Safety Functions ranked in order of highest priority to lowest priority?

1. RCS Pressure Control
2. RCS Inventory Control
3. Core Heat Removal
4. Containment Isolation

A. 1, 2, 3, 4

B. 1, 2, 4, 3

C. 2, 1, 3, 4

D. 2, 1, 4, 3

Answer: C

Explanation:

A. Plausible that PC would be higher than IC since a loss of pressure control could result in a loss of subcooling and boiling in the core, however IC is higher than PC. HR and CI are in the correct order.
B. Plausible that PC would be higher than IC since a loss of pressure control could result in a loss of subcooling and boiling in the core, however IC is higher than PC. Plausible that CI would be higher than HR since a loss of containment isolation could result in an unmonitored release of radioactivity to the public, however HR is is higher than CI.
C. Correct.
D. Plausible that CI would be higher than HR since a loss of containment isolation could result in an unmonitored release of radioactivity to the public, however HR is is higher than CI. IC and PC are in the correct order.

Question Source:		**Bank**	
		Modified Bank	
	x	**New**	
		Previous NRC Exam	

Question Cognitive Level:	**x**	**Memory or Fundamental Knowledge**
		Comprehension or Analysis
	2	**Level of Difficulty**

10 CFR Part 55 Content:	**41.10**

Reference Provided:	**None**

Learning Objective:	Define the term "safety function" as it applies to the EOPs and describe how this concept is used in the sequencing of the operator's actions during performance of the EOPs

Technical Reference: 40DP-9AP16, EOP Users Guide
4.16 SAFETY FUNCTIONS 4.16.1 A safety function is a condition or action that prevents core damage or minimizes radiation release to the public. The safety functions concept provides a systematic approach to plant operations based on a hierarchy of standard protective actions designed to mitigate the consequences of any event and, once fulfilled, ensure proper plant control regardless of the event that is occurring.

Technical Reference: 40DP-9AP16, EOP Users Guide

4.17.2 Maintenance of Vital Auxiliaries

A. The Maintenance of Vital Auxiliaries safety function ensures that the support systems used to accomplish the other safety functions are available. In general, support systems provide electric power for valve operation, pump motors, and operating instruments, and the ultimate heat sink to which core heat can be transferred. AC and DC power must be maintained in order to successfully accomplish the other safety functions. In order to satisfy the Maintenance of Vital Auxiliaries safety function, PVNGS uses the "Bus Plus" criteria which means that the equipment needed to satisfy the jeopardized safety function is available on the powered bus.

4.17.3 RCS Inventory Control

A. The RCS Inventory Control safety function provides maintenance of sufficient reactor coolant to allow for heat transport out of the RCS.

4.17.4 RCS Pressure Control

A. The RCS Pressure Control safety function ensures that the core is kept covered with an effective coolant medium. RCS pressure and inventory control are interdependent. That is, actions taken to affect inventory control will affect pressure control and vice versa.

4.17.5 Core Heat Removal

A. The Core Heat Removal safety function provides for the removal of decay heat generated in the core, including transfer of heat from the core to a location where heat can be removed from the RCS.

4.17.6 RCS Heat Removal

A. The RCS Heat Removal safety function provides for the transfer of heat from the RCS to another heat sink.

4.17.7 Containment Isolation

A. The Containment Isolation safety function ensures that radioactive releases from the containment are minimized by maintaining the integrity of the containment structure and system boundaries within containment. Accomplishing the first part of the safety function, containment isolation, assists in maintaining containment integrity by ensuring that all normal containment penetrations not required for accident mitigation are closed off when necessary. The second part requires system boundaries (for example, SGs) to be intact to maintain containment integrity.

Examination Outline Cross-reference:	Level	RO		SRO
	Tier #			1
	Group #			1
	K/A #	025 AA2.01		
	Importance Rating			2.9
K/A: Loss of RHR System: Ability to determine and interpret the following as they apply to the Loss of Residual Heat Removal System: Proper amperage of running LPI/decay heat removal/RHR pump(s)				

Question 76

Given the following conditions on Unit 1:

- RCS temperature is 300°F and slowly lowering
- RCS pressure is 350 psia and stable
- SDC is in service using Train 'B' LPSI
- The Pressurizer Manway is ON
- Steam Generators are available for heat removal
- Train 'A' 4kV Bus PBA-S03 is de-energized due to a bus fault

Subsequently:

- The Train 'B' LPSI pump is continuously oscillating between 50 and 60 amps and SDC flow is oscillating between 4200 and 4600 gpm
- The CRS has entered 40EP-9EO11, Lower Mode Functional Recovery, and is addressing HR-2, SDC

The CRS should direct the RO to ___(1)___ and if the SDC flow adjustment is unsuccessful, should direct the RO to ___(2)___ .

A. (1) lower SDC flow to 3780 gpm
   (2) secure the 'B' LPSI Pump, then GO TO HR-3, Natural Circulation

B. (1) lower SDC flow to 3780 gpm
   (2) perform Standard Appendix 240, LM – Placing Train B CS on SDC

C. (1) raise SDC flow to 5000 gpm
   (2) secure the 'B' LPSI Pump, then GO TO HR-3, Natural Circulation

D. (1) raise SDC flow to 5000 gpm
   (2) perform Standard Appendix 240, LM – Placing Train B CS on SDC

Answer: A

Explanation:

A. Correct.
B. First part is correct. Second part is plausible since Train 'B' power is available and CS Pumps can be used for SDC, however in MODE 4, CS Pumps should not be used for SDC. Additionally, the LMFR procedure does not direct using CS Pumps in this condition, it directs using natural circulation.
C. First part is plausible if thought that flow lowering to 4200 gpm puts the LPSI Pump in its "rumble region" however lowering flow to the low end of the band is the correct action to take. Second part is correct.
D. First part is plausible if thought that flow lowering to 4200 gpm puts the LPSI Pump in its "rumble region" however lowering flow to the low end of the band is the correct action to take. Second part is plausible since Train 'B' power is available and CS Pumps can be used for SDC, however in MODE 4, CS Pumps should not be used for SDC. Additionally, the LMFR procedure does not direct using CS Pumps in this condition, it directs using natural circulation.

Question Source:		**Bank**	
		Modified Bank	
	x	**New**	
		Previous NRC Exam	

Question Cognitive Level:		**Memory or Fundamental Knowledge**
	x	**Comprehension or Analysis**
	3	**Level of Difficulty**

10 CFR Part 55 Content:	**43.5**

Reference Provided:	**None**

Learning Objective:	Describe how adequate SDC flow is determined and what actions may be taken if adequate flow cannot be maintained

SRO Justification:

Figure 2-2 Screening for SRO-Only Linked to 10 CFR 55.43(b)(5) (Assessment and Selection of Procedures)

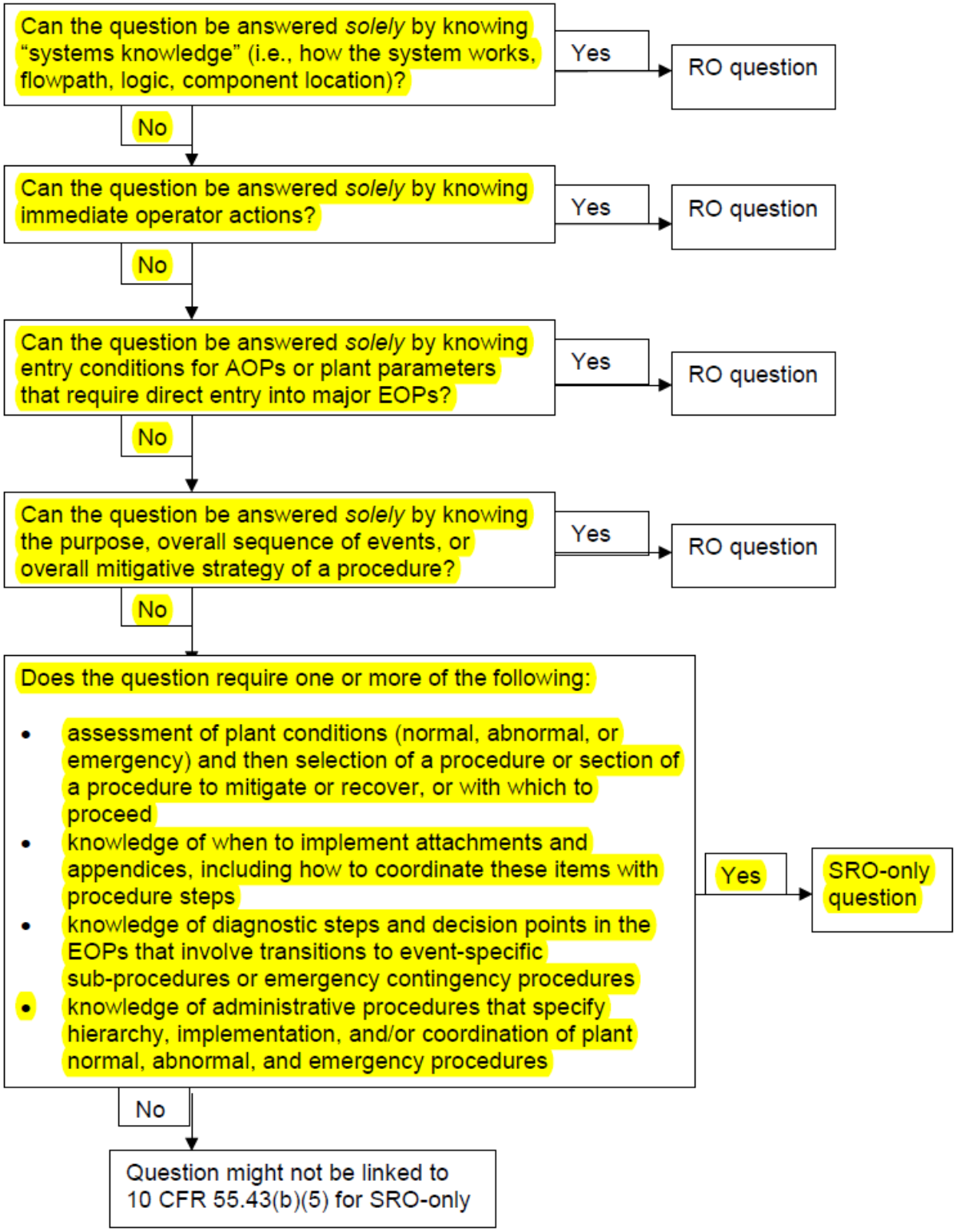

Technical Reference: 40EP-9EO11, Lower Mode Functional Recovery

18.0 RCS AND CORE HEAT REMOVAL

SUCCESS PATH: HR-2: SDC

INSTRUCTIONS	CONTINGENCY ACTIONS
1. Open the placekeeper.	
✱ 2. **IF** SDC is in service, **AND ANY** of the following are occurring at less than one minute intervals: • SDC pump flow oscillations, • SDC pump amp oscillations, **THEN** perform the following: a. **IF** two SDC Pumps are in service, **THEN** stop one of the running SDC Pumps. b. **IF** the oscillations are still present, **THEN** reduce SDC flow to 3780 gpm. c. Check for **BOTH** of the following: • Stable SDC flow • Stable SDC pump amps d. **IF** the oscillations are still present, **THEN** perform the following: 1) Stop the affected SDC pump. 2) GO TO Step 8.	

Technical Reference: 40EP-9EO11, Lower Mode Functional Recovery

Temperature and pressure are too high for CS Pump to be used for SDC

INSTRUCTIONS

✱ 13. **IF ANY** of the following exist:

- SDC is **NOT** running,
- It is desired to start an idle train,

AND ALL of the following are met:

- Any CS Pump is available,
- The 4.16 kV bus for the available CS pump is **NOT** energized from a single SBOG,
- Pressurizer pressure is less than 210 psia [210 psia],
- RCS temperature is less than 185°F [185°F],

THEN PERFORM **ONE** of the following as appropriate:

- Appendix 239, LM - Placing Train A CS on SDC
- Appendix 240, LM - Placing Train B CS on SDC

Technical Reference: 40EP-9EO11, Lower Mode Functional Recovery

Since there was a loss of offsite power, HR-1, Forced Circulation, is not an option. The next highest priority option is HR-3, Natural Circulation.

INSTRUCTIONS

17. Determine the time to core boiling. REFER TO the SAOD UNIT x to determine the Time-to Boil.

18. **IF** SDC is **NOT** running, **THEN** perform the following:

    a. **IF** the PZR Manway is ON, **AND** a steam generator is available for heat removal, **THEN** GO TO **ONE** of the following:

    - HR-1, Forced Circulation
    - HR-3, Natural Circulation
    - HR-4, SI Once Thru Cooling

Examination Outline Cross-reference:	Level	RO		SRO
	Tier #			1
	Group #			1
	K/A #	027 G 2.1.32		
	Importance Rating			4.0
K/A: Pressurizer Pressure Control System Malfunction: Ability to explain and apply system limits and precautions				

Question 77

Given the following conditions:

- Unit 1 is operating at 100% power
- RCN-HS-100, Pressure Control Channel X/Y Selector, is selected to Channel 'X'

Subsequently:

- RCS Pressure transmitter, RCN-PT-100X, failed low
- The 'A' Train Class Backup Heater Bank tripped shortly after being energized and the crew entered LCO 3.4.9, Pressurizer, Condition B, due to one required group of pressurizer heaters being inoperable.

With no operator action, RCN-PIC-100, Pressurizer Pressure Master Controller, should go to ___(1)___ output, and the MAXIMUM completion time for returning the 'A' Class Train Backup Heater Bank to OPERABLE status is ___(2)___ hours.

A. (1) 100%
(2) 6

B. (1) 100%
(2) 72

C. (1) 0%
(2) 6

D. (1) 0%
(2) 72

Answer: D

Explanation:

A. First part is plausible since the pressure transmitter failure would result in full proportional heater output, however PIC-100 is a reverse acting controller so 0% output = full heater output. Second part is plausible since 6 hours is the completion time for LCO 3.4.9 if entered due to pressurizer level, however 72 hours is correct for returning a set of required heaters to operable.
B. First part is plausible since the pressure transmitter failure would result in full proportional heater output, however PIC-100 is a reverse acting controller so 0% output = full heater output. Second part is correct.
C. First part is correct. Second part is plausible since 6 hours is the completion time for LCO 3.4.9 if entered due to pressurizer level, however 72 hours is correct for returning a set of required heaters to operable.
D. Correct.

Question Source:		**Bank**	
		Modified Bank	
	x	**New**	
		Previous NRC Exam	

Question Cognitive Level:		**Memory or Fundamental Knowledge**
	X	**Comprehension or Analysis**
	3	**Level of Difficulty**

10 CFR Part 55 Content:	**43.2**

Reference Provided:	**None**

Learning Objective:	Apply Tech Spec Section 3.4.9, Pressurizer

SRO Justification:

Figure 2-1 Screening for SRO-Only Linked to 10 CFR 55.43(b)(2) (Technical Specifications)

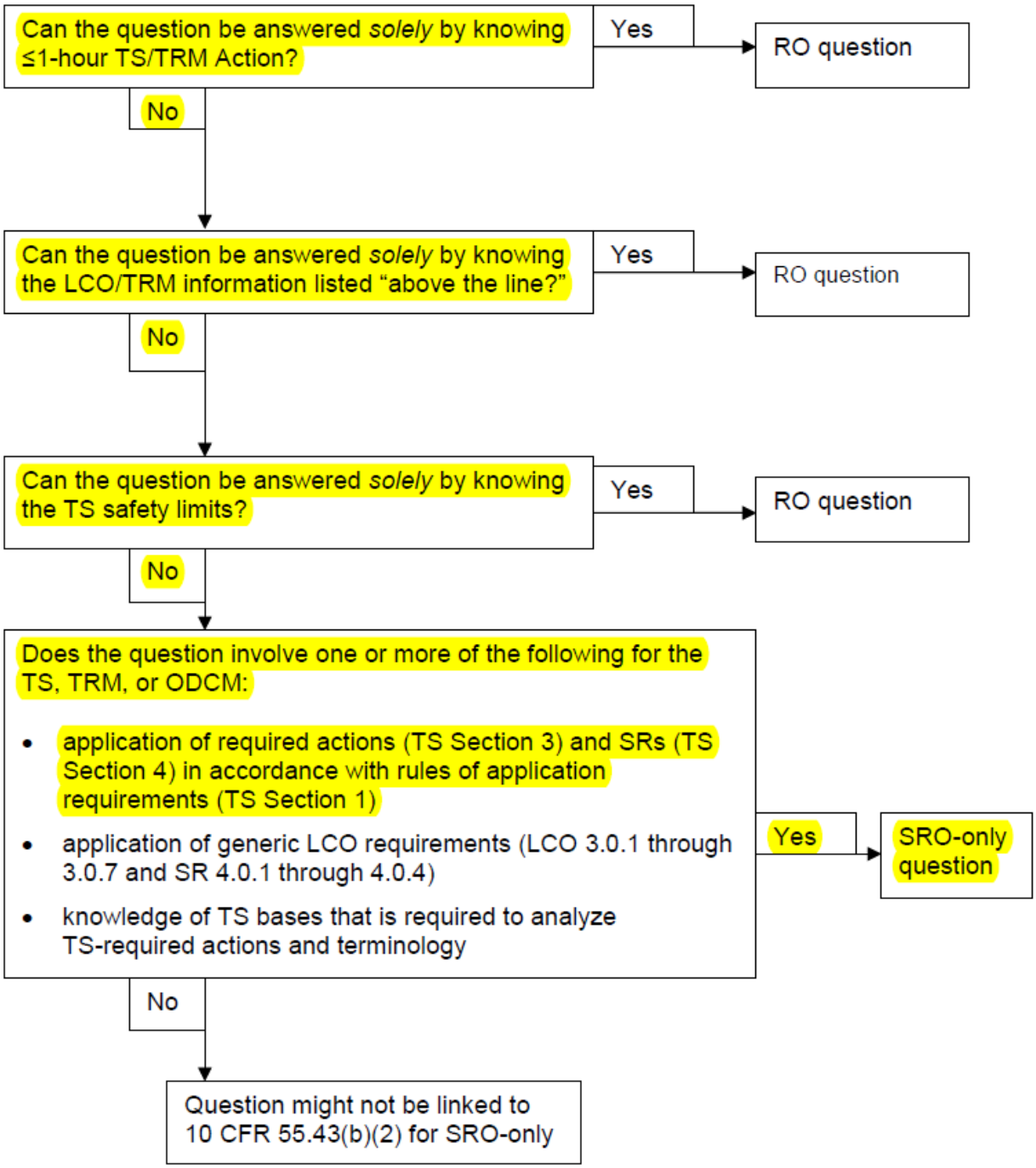

Technical Reference: PV Operator Information Manual

RCN-PIC-100 output lowers when pressure is low to energize heaters and close spray valves (the case in this question) and output rises when pressure is high to deenergize heaters and open spray valves when pressure is high.

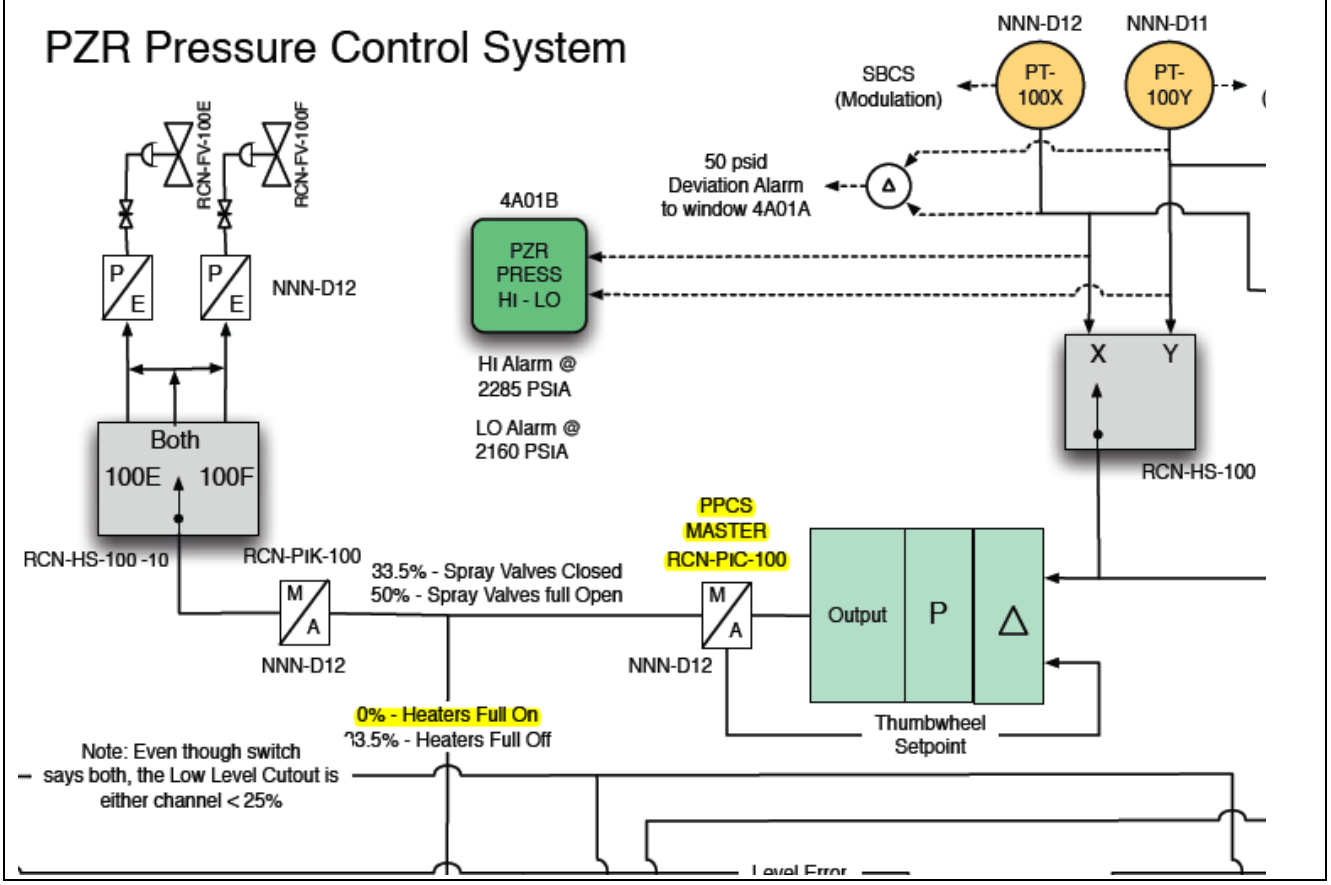

Technical Reference: Technical Specifications

3.4 REACTOR COOLANT SYSTEM (RCS)

3.4.9 Pressurizer

LCO 3.4.9 The pressurizer shall be OPERABLE with:

a. Pressurizer water level ≥ 27% and ≤ 56%; and

b. Two groups of pressurizer heaters OPERABLE with the capacity of each group ≥ 125 kW.

APPLICABILITY: MODES 1, 2, and 3.

----------NOTE----------
The pressurizer water level limit does not apply during:

a. THERMAL POWER ramp > 5% RTP per minute; or
b. THERMAL POWER step > 10% RTP.

ACTIONS

CONDITION	REQUIRED ACTION	COMPLETION TIME
A. Pressurizer water level not within limit.	A.1 Be in MODE 3 with reactor trip breakers open. AND A.2 Be in MODE 4.	6 hours 12 hours
B. One required group of pressurizer heaters inoperable.	B.1 Restore required group of pressurizer heaters to OPERABLE status.	72 hours

(continued)

Examination Outline Cross-reference:	Level	RO		SRO
	Tier #			1
	Group #			1
	K/A #	029 G 2.4.18		
	Importance Rating			4.0
K/A: ATWS: Knowledge of the specific bases for EOPs				

Question 78

Given the following conditions:

- A valid Reactor trip signal was received
- The Reactor failed to trip and all contingency actions failed to trip the Reactor
- The crew is preparing to emergency borate the RCS

(1) Per the PVNGS Updated FSAR, the MINIMUM boration flowrate required to ensure adequate Shutdown Margin is achieved is…

(2) Per the Core Operating Limits Report, Shutdown Margin Versus Cold Leg Temperature – Reactor Circuit Breakers Closed, the HIGHEST % Δk/k Shutdown Margin requirement exists when RCS Tcold is…

A. (1) 26 gpm
(2) ≤ 350°F

B. (1) 26 gpm
(2) ≥ 500°F

C. (1) 44 gpm
(2) ≤ 350°F

D. (1) 44 gpm
(2) ≥ 500°F

Answer: B

Explanation:

A. First part is correct. Second part is plausible since SDM is constant from 0 to 350°F and it is logical to think that SDM requirements would be greater at lower temperatures since the moderator is denser, however the maximum SDM is required at ≥ 500°F.
B. Correct.
C. First part is plausible since 44 gpm is the minimum boration flowrate listed in Standard Appendix 103, RCS Makeup / Emergency Boration, however the minimum rate per the UFSAR is 26 gpm. Second part is plausible since SDM is constant from 0 to 350°F and it is logical to think that SDM requirements would be greater at lower temperatures since the moderator is denser, however the maximum SDM is required at ≥ 500°F.
D. First part is plausible since 44 gpm is the minimum boration flowrate listed in Standard Appendix 103, RCS Makeup / Emergency Boration, however the minimum rate per the UFSAR is 26 gpm. Second part is correct.

Question Source:		**Bank**	
		Modified Bank	
	x	**New**	
		Previous NRC Exam	

Question Cognitive Level:	**x**	**Memory or Fundamental Knowledge**
		Comprehension or Analysis
	3	**Level of Difficulty**

10 CFR Part 55 Content:	**43.6**

Reference Provided:	**None**

Learning Objective:	Describe the EOP expectation concerning boration

SRO Justification:

F. Procedures and Limitations Involved in Initial Core Loading, Alterations in Core Configuration, Control Rod Programming, and Determination of Various Internal and External Effects on Core Reactivity [10 CFR 55.43(b)(6)]

Some examples of SRO exam items for this topic include the following:

- evaluation of core conditions and emergency classifications based on core conditions
- administrative requirements associated with low-power physics testing processes
- administrative requirements associated with refueling activities, such as approvals required to amend core loading sheets or administrative controls of potential dilution paths and/or activities
- administrative controls associated with the installation of neutron sources
- knowledge of TS bases for reactivity controls

Technical Reference: PVNGS UFSAR

charging line backpressure control valve can be bypassed with the spring loaded check valve in the alternate pathway ensuring the functionality of auxiliary spray and seal injection (if required). Controlled bleed-off flow can be routed to the Reactor Drain Tank rather than Volume Control Tank.

Most of the valves in the system are air-operated and designed to fail in a safe condition. In the unlikely event of a loss of all three instrument air compressors, a backup nitrogen supply can be automatically or manually aligned in order to restore functionality of the CVCS air-operated valves.

9.3.4.4.2 Emergency Boration

The requirements for minimum shutdown margin are contained in the Technical Specifications and Core Operating Limits Report (COLR). When the reactor is critical (operational modes 1 and 2), shutdown margin requirements are met by maintaining control rods above the Power Dependent Insertion Limits (PDILs) presented in the COLR. In lower modes 3-5 and during refueling, shutdown margin is achieved by keeping the reactor coolant soluble boron concentration above the limits provided in the Core Data Book. If the minimum shutdown margin requirements are not maintained, then the reactor coolant system must be borated at a rate of approximately 26 gpm with a minimum 4000 ppm boric acid solution. This process of borating to recover shutdown margin is known as emergency boration. When required, it must be commenced within 15 minutes and

Technical Reference: 40EP-9EO10, Standard Appendices, Appendix 103, RCS Makeup / Emergency Boration

PALO VERDE NUCLEAR GENERATING STATION STANDARD APPENDICES	40EP-9EO10 Revision 101 Page 974 of 1390 Appendix 103 Page 4 of 19

Attachment 103-A Normal Boration Path / RWT >73% Page 2 of 2

INSTRUCTIONS	CONTINGENCY ACTIONS
____ 9. Check for BOTH of the following: a. CHN-FIC-210X indicates no Reactor Makeup Water flow. (CHN-FV-210X closed) b. Proper flow indicated on CHN-FIC-210Y.	
____ 10. Adjust the boric acid makeup setpoint on CHN-FIC-210Y to greater than or equal to 44 gpm.	

Technical Reference: Unit 1 Core Operating Limits Report

FIGURE 3.1.2-1
SHUTDOWN MARGIN VERSUS COLD LEG TEMPERATURE
REACTOR TRIP BREAKERS CLOSED

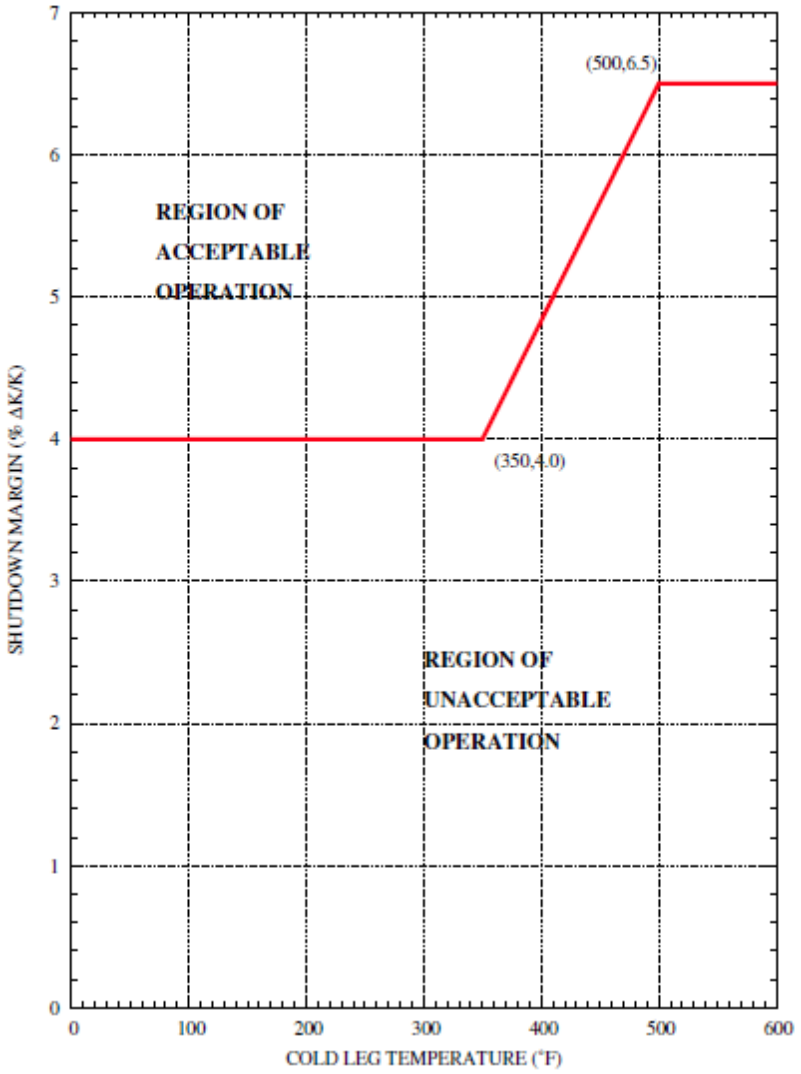

Examination Outline Cross-reference:	Level	RO		SRO
	Tier #			1
	Group #			1
	K/A #	040 AA2.03		
	Importance Rating			4.7
K/A: Steam Line Rupture: Ability to determine and interpret the following as they apply to the Steam Line Rupture: Difference between steam line rupture and LOCA				

Question 79

Given the following conditions:

- Unit 1 tripped from 100% power
- SPTAs are in progress
- Pressurizer Pressure is 1750 psig and lowering
- Pressurizer Level is 5% and lowering
- Containment Pressure is 15 psig and rising
- RCS subcooling is 75°F and becoming more subcooled
- SG Pressures are 1000 psia and lowering
- CS Pump 'B' is under clearance

After entering the ORP, an electrical transient occurs resulting in several alarms on B01A

NOTE: B01A alarms are pictured on the next page

Following SPTAs, the CRS should enter ___(1)___ , and following the electrical transient, the CRS should transition to the FRP and restore Containment Spray by ___(2)___ .

A. (1) 40EP-9EO03, Loss of Coolant Accident
(2) aligning 'B' LPSI Pump to Containment Spray per CTPC-2

B. (1) 40EP-9EO03, Loss of Coolant Accident
(2) energizing PBA-S03 from NBN-X04, 'B' ESF Transformer per MVAC-1

C. (1) 40EP-9EO05, Excessive Steam Demand
(2) aligning 'B' LPSI Pump to Containment Spray per CTPC-2

D. (1) 40EP-9EO05, Excessive Steam Demand
(2) energizing PBA-S03 from NBN-X04, 'B' ESF Transformer per MVAC-1

Alarms on B01A following the electrical transient:

A	DG A TRIP	DG A RUNNING	DG A FUEL SYS TRBL	125V IE CC M41 CHGR A/AC PNL D21 TRBL	125V IE CC M43 CHGR C PNL D23 TRBL	4.16KV IE TR A SPLY BKR LKO TRIP	MCC FEEDER BKR LOCKOUT TRIP
B	DG A GEN DIFF TRIP	DG A OVSPD TRIP	DG A IN LOCAL MODE	120VAC IE PNL D25 INVERTER A TRBL	120VAC IE PNL D27 INVERTER C TRBL	4.16V IE TR A SWGR S03 TRIP	XFMR HI TEMP BUS UNDV 125VDC FAILURE
C	DG A LO LUBE OIL PRESS TRIP	DG A EMERG MAN TRIP		125V IE CC M42 CHGR B/BD DPNL D22 TRBL	125V IE CC M44 CHGR D PNL D24 TRBL	480V IE TR A SPLY BKR LKO TRIP	480V IE TR A LC L35 SPLY BKR LKO TRIP
D	DG A HI PRIORITY TRBL	DG A LO PRIORITY TRBL	UNDV A CH TRIP	120VAC IE PNL D26 INVERTER B OR SWING TRBL	120VAC IE PNL D28 INVERTER D OR SWING TRBL	480 VOLT IE TR A LC L31 SPLY BKR TRBL	480 VOLT IE TR A LC L35 SPLY BKR TRBL
	1	2	3	4	5	6	7

Answer: C

Explanation:

A. First part is plausible since a LOCA would be correct given all the given conditions except for RCS subcooling would be lower and lowering, not rising. Second part is correct.
B. First part is plausible since a LOCA would be correct given all the given conditions except for RCS subcooling would be lower and lowering, not rising. Second part is plausible since MVAC-1 is a higher priority safety function and it would aid in restoring CS flow by restarting the 'A' CS Pump, however since the bus was faulted, MVAC-1 is not an option to restore power to PBA-S03.
C. Correct.
D. First part is correct. Second part is plausible since MVAC-1 is a higher priority safety function and it would aid in restoring CS flow by restarting the 'A' CS Pump, however since the bus was faulted, MVAC-1 is not an option to restore power to PBA-S03.

Question Source:		**Bank**	
		Modified Bank	
	x	**New**	
		Previous NRC Exam	

Question Cognitive Level:		**Memory or Fundamental Knowledge**
	x	**Comprehension or Analysis**
	3	**Level of Difficulty**

10 CFR Part 55 Content:	**43.5**

Reference Provided:	**None**

Learning Objective:	Use the FRP (MVAC-1) to mitigate an event

SRO Justification:

Figure 2-2 Screening for SRO-Only Linked to 10 CFR 55.43(b)(5) (Assessment and Selection of Procedures)

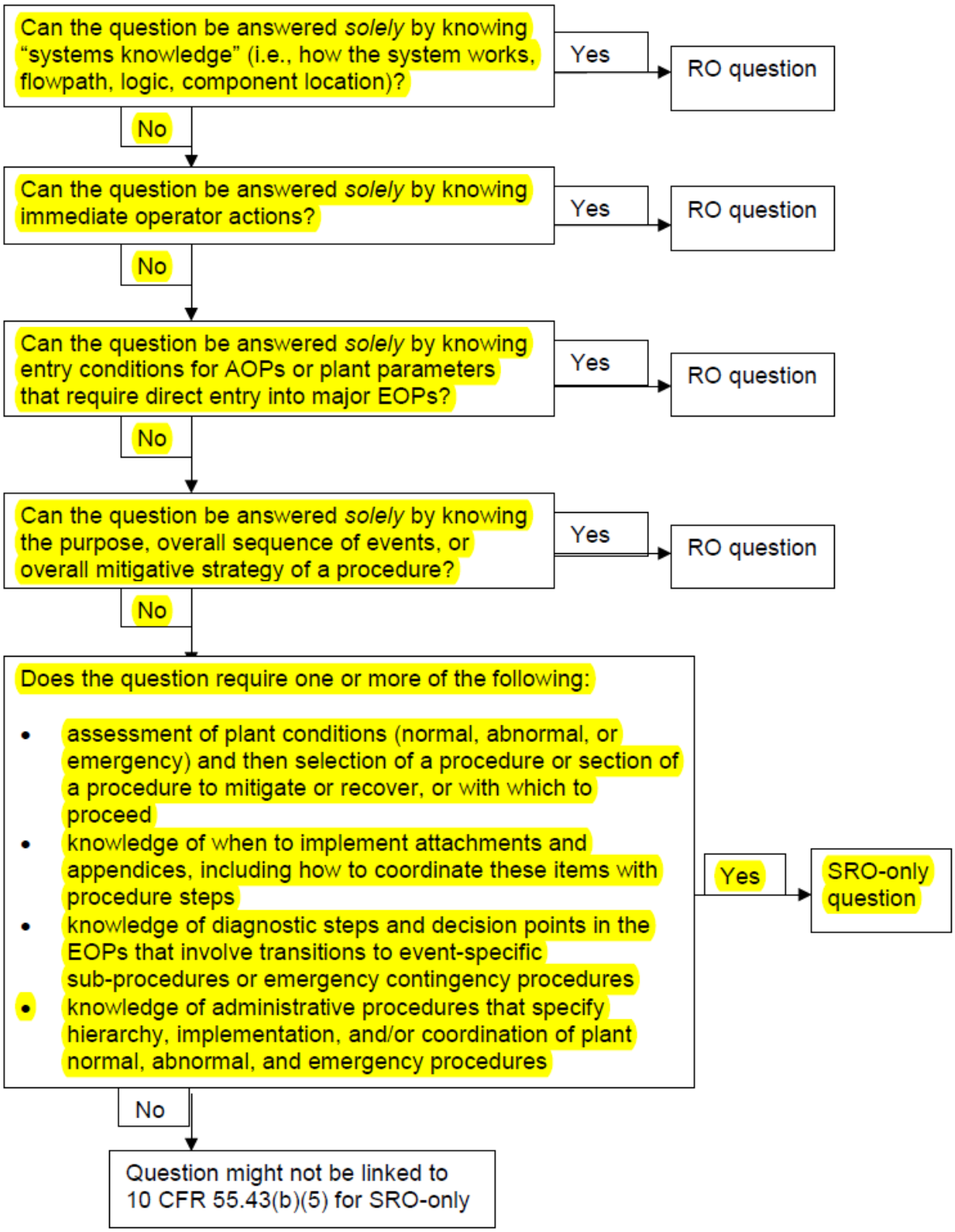

Technical Reference: 40EP-9EO01, Standard Post Trip Actions

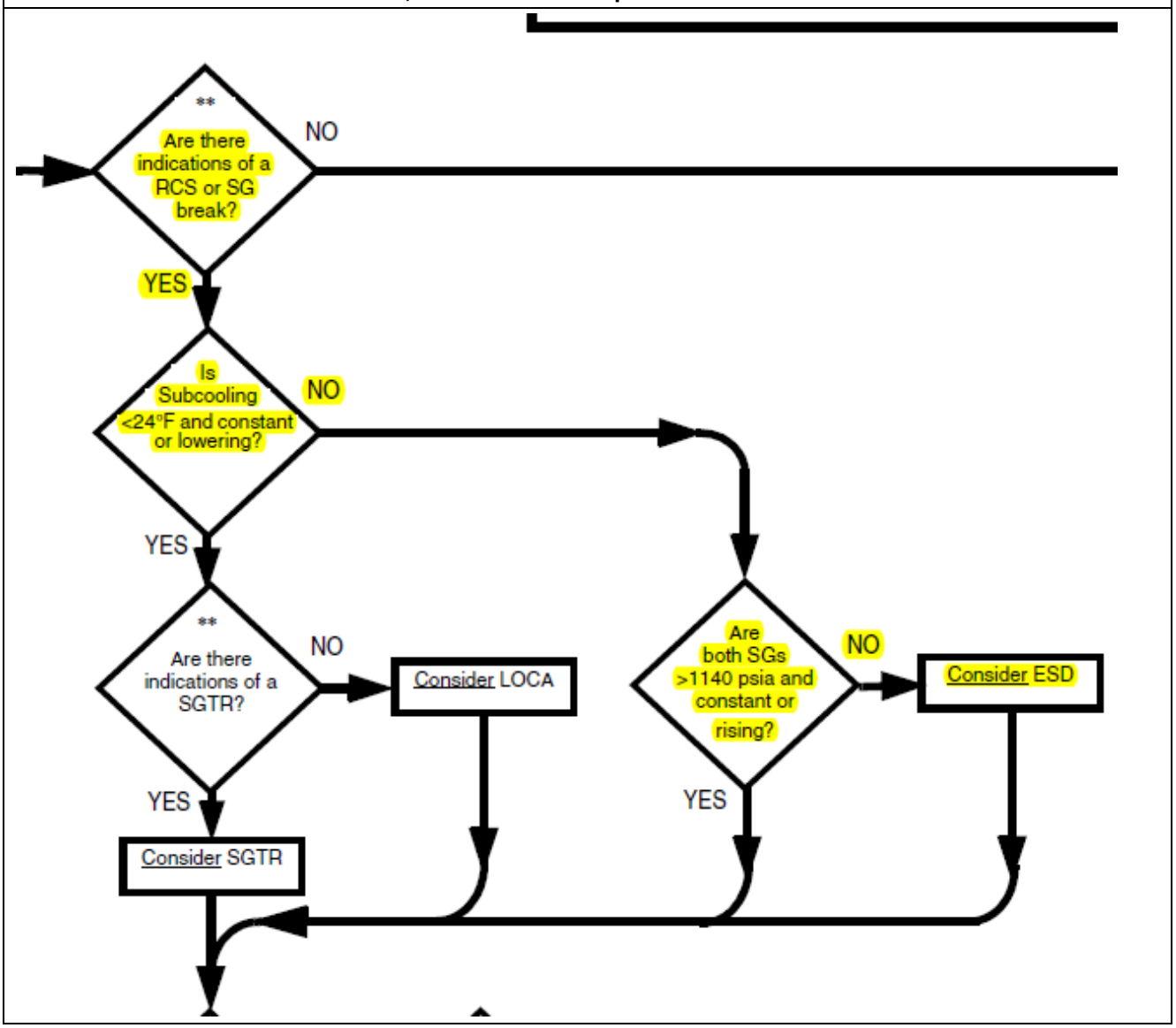

Technical Reference: 40EP-9EO09, Functional Recovery

Because of the electrical transient on the bus, step 11 of MVAC-1 does allow for resetting the lockout on the bus if the cause is a generator differential trip, however if that was the case, alarm 1A01B would be in alarm and 1A06A would not. In this situation, the lockout on the supply breaker would warrant further evaluation and inspection/repairs to the bus prior to re-energization.

PALO VERDE NUCLEAR GENERATING STATION	40EP-9EO09 Revision 59
	Page 55 of 238
FUNCTIONAL RECOVERY	MVAC-1 Page 5 of 9

INSTRUCTIONS	CONTINGENCY ACTIONS
✱ 11. **IF** it is desired to energize PBA-S03 from ESF Service Transformer NBN-X04, **THEN** perform the following:	
a. **IF** the cause of the loss of power is **NOT** known, **THEN** evaluate inspecting the buses before re-energizing.	
b. **IF** a "DG A GEN DIFF TRIP" (1A01B) alarm is locked in, **THEN** direct **ALL** of the following:	
1) Press "STOP" on DGA-HS-29, "DG A EMERGENCY STOP".	
2) Reset "GENERATOR DIFFERENTIAL LOCKOUT RELAY 86D".	
3) Check that the "LOCKOUT RELAY RESET" white light is on.	
c. Place synchronizing switch PBA-SS-S03K, 4.16 KV Bus S03 Alternate Supply, to "ON".	
d. Close breaker PBA-S03K, 4.16 KV Bus S03 Alternate Supply.	
e. Place synchronizing switch PBA-SS-S03K to "OFF".	

Technical Reference: 40EP-9EO09, Functional Recovery

INSTRUCTIONS	CONTINGENCY ACTIONS
✱ 3. (continued)	3.2 **IF** it is desired to use LPSI Pump B to supply CS B train, **AND** LPSI Pump B is **NOT** needed to support any RC, IC, or HR success path, **THEN** perform the following: a. Ensure that LPSI Pump B is running. b. Ensure that SIB-HV-307, LPSI Shutdown Cooling Heat Exchanger B Bypass Valve, is closed. c. Ensure that SIB-HV-695, LPSI-Containment Spray From Shutdown Heat Exchanger B Cross-Tie Valve, is open. d. Ensure that SIB-UV-671, Containment Spray B Discharge To Spray Header 2 Valve, is open. e. Ensure SIB-HV-694, LPSI-Containment Spray To Shutdown Heat Exchanger B Cross-Tie Valve, is open. f. Check that the LPSI pump is running at less than 60 amps.

Examination Outline Cross-reference:	Level	RO		SRO
	Tier #			1
	Group #			1
	K/A #	057 AA2.18		
	Importance Rating			3.1

K/A: Loss of Vital AC Instrument Bus: Ability to determine and interpret the following as they apply to the Loss of Vital AC Instrument Bus: The indicator, valve, breaker, or damper position which will occur on a loss of power

Question 80

Given the following picture of Panel B04 in MODE 1:

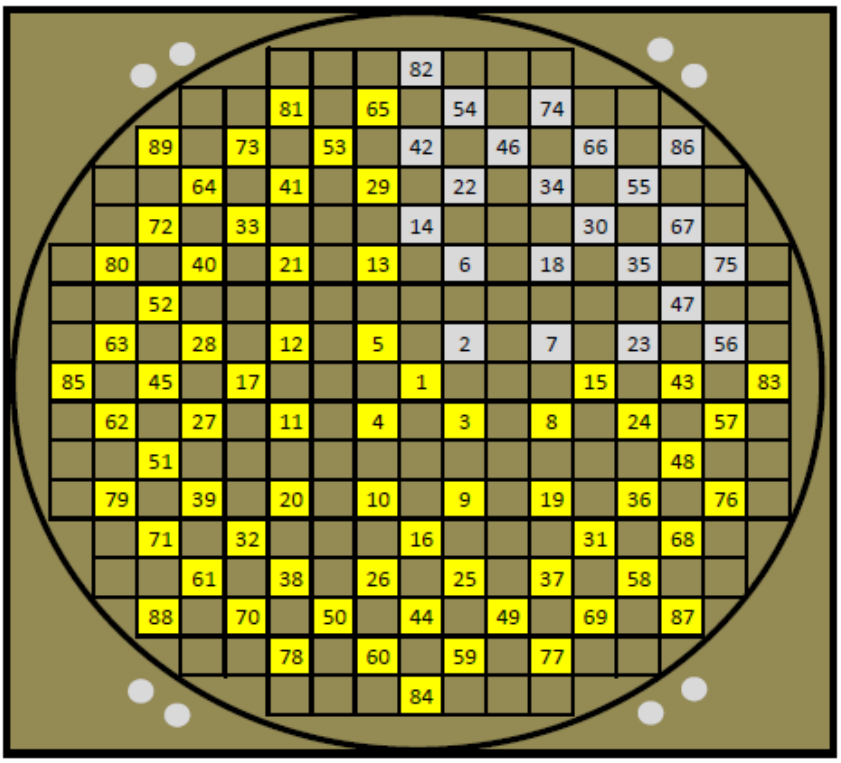

Based on the above picture, ___(1)___ has been de-energized, and per LCO 3.8.9 Distribution Systems – Operating, the crew must return this vital bus to OPERABLE status within a MAXIMUM of ___(2)___ hours.

A. (1) PNC-D27
(2) 2

B. (1) PNC-D27
(2) 8

C. (1) PND-D28
(2) 2

D. (1) PND-D28
(2) 8

Answer: A

Explanation:

A. Correct.
B. First part is correct. Second part is plausible since 8 hours is the completion time for one AC electrical power distribution subsystem inoperable, however one AC vital instrument bus being inoperable is a 2 hour action.
C. First part is plausible since PND-D28 does power rod bottom lights, however it powers quadrants 2, 3, and 4. Second part is correct.
D. First part is plausible since PND-D28 does power rod bottom lights, however it powers quadrants 2, 3, and 4. Second part is plausible since 8 hours is the completion time for one AC electrical power distribution subsystem inoperable, however one AC vital instrument bus being inoperable is a 2 hour action.

Question Source:		**Bank**	
		Modified Bank	
	x	**New**	
		Previous NRC Exam	

Question Cognitive Level:		**Memory or Fundamental Knowledge**
	x	**Comprehension or Analysis**
	3	**Level of Difficulty**

10 CFR Part 55 Content:	**43.2**

Reference Provided:	**None**

Learning Objective:	Apply the action statements that are greater than one hour for TS 3.8

SRO Justification:

Figure 2-1 Screening for SRO-Only Linked to 10 CFR 55.43(b)(2) (Technical Specifications)

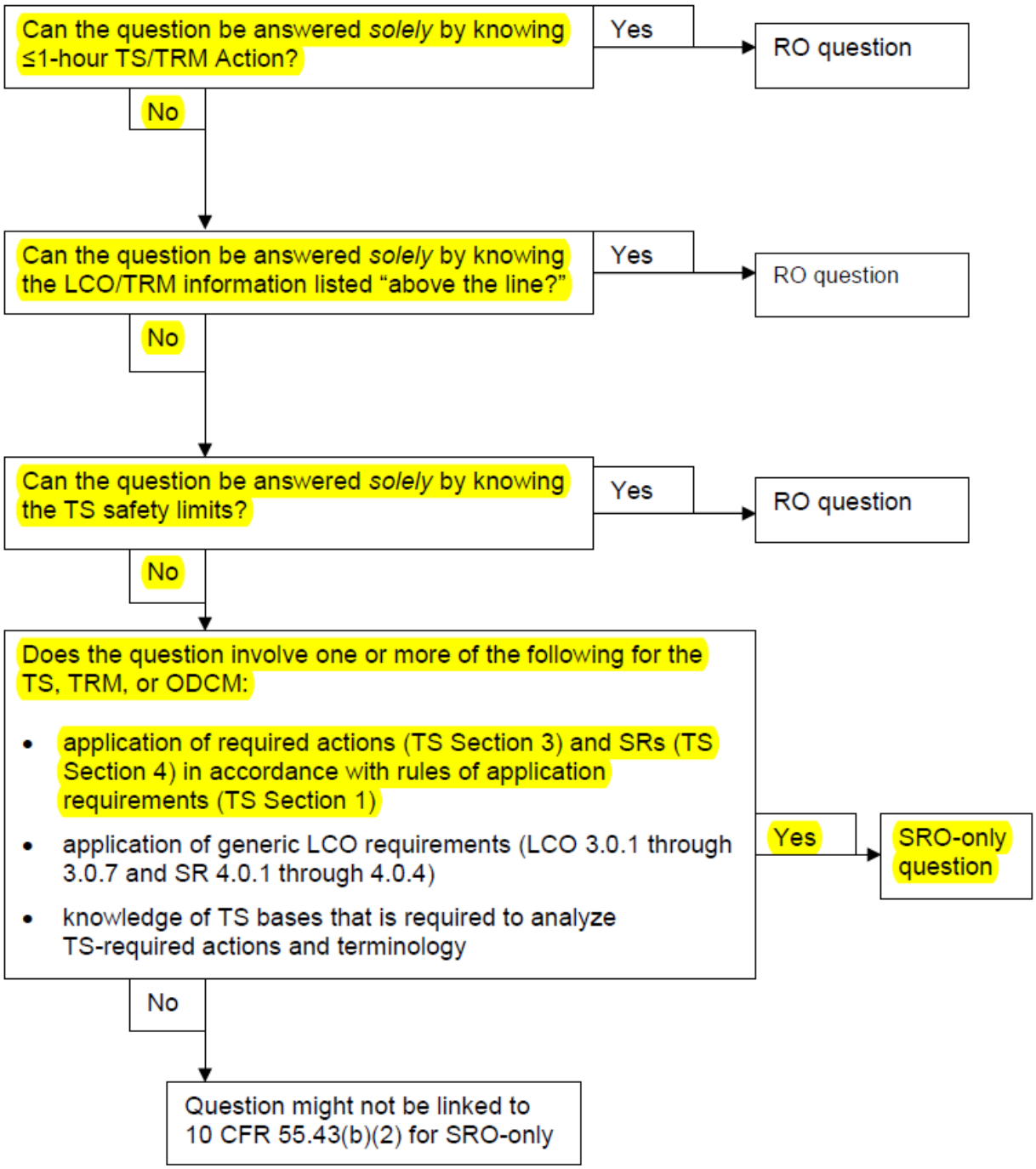

Technical Reference: 40AO-9ZZ13, Loss of Class Instrument or Control Power

Appendix E, Effects of the Loss of Channel C

System	PKC M43	PKC D23	PNC D27	Response
SF			X	CEDMCS cabinet C5 loses power causing false UEL, LEL, and RDC indications on the Operators Module and Core Mimic for CEA #1 and CPC's A, B and C target rods. The UEL, LEL inputs to the Subgroup Logic prevents CEA motion for all subgroups in AS, MS, and MG. Movement in Manual Individual is prevented for the affected CEAs. Pulse counters will be zeroed for all CEAs with the RDC lights illuminated.

Technical Reference: Technical Specifications

3.8 ELECTRICAL POWER SYSTEMS

3.8.9 Distribution Systems – Operating

LCO 3.8.9 Train A and Train B AC, DC, and AC vital instrument bus electrical power distribution subsystems shall be OPERABLE.

APPLICABILITY: MODES 1, 2, 3, and 4.

ACTIONS

CONDITION	REQUIRED ACTION	COMPLETION TIME
A. One AC electrical power distribution subsystem inoperable.	A.1 Restore AC electrical power distribution subsystem to OPERABLE status.	8 hours
B. One AC vital instrument bus electrical power distribution subsystem inoperable.	B.1 Restore AC vital instrument bus electrical power distribution subsystem to OPERABLE status.	2 hours

(continued)

Examination Outline Cross-reference:	Level	RO		SRO
	Tier #			1
	Group #			1
	K/A #	077 G 2.4.31		
	Importance Rating			4.1
K/A: Generator Voltage and Electric Grid Disturbances: Knowledge of annunciator alarms, indications, or response procedures				

Question 81

Given the following conditions:

- Unit 1 is operating at 100% power.
- Unit 2 is in a refueling outage.
- Unit 3 has just tripped.
- Annunciator 1B03B, LAST UNIT ON - LINE, has just alarmed in Unit 1.
- Unit 1 Main Generator is boosting 50 MVAR.
- LCO 3.8.1 Condition G has been entered in Unit 1 due to both offsite circuits not meeting required capability.
- Switchyard voltage is currently 523 kV.

(1) In this condition, to comply with LCO 3.8.1 Condition G, the CRS can direct either blocking fast bus transfer on NAN-S01 and NAN-S02, OR _____ .

(2) The PREFERRED AVAILABLE option per the LCO 3.8.1 Technical Specifications Bases is to _____ .

A. (1) boosting additional MVAR to raise switchyard voltage
(2) block fast bus transfer on NAN-S01 and NAN-S02

B. (1) boosting additional MVAR to raise switchyard voltage
(2) boost additional MVAR to raise switchyard voltage

C. (1) transferring the Class 4kV buses to their respective EDGs
(2) block fast bus transfer on NAN-S01 and NAN-S02

D. (1) transferring the Class 4kV buses to their respective EDGs
(2) transfer the Class 4kV buses to their respective EDGs

Answer: C

Explanation:

A. First part is plausible since this would be an acceptable method to comply with 3.8.1 G and is the preferred method per the TS bases, however since Unit 1 is the last unit online, this method is not allowed. Second part is correct.
B. First part is plausible since this would be an acceptable method to comply with 3.8.1 G and is the preferred method per the TS bases, however since Unit 1 is the last unit online, this method is not allowed. Plausible as this raising switchyard voltage is preferred in the TSB, however since it is not allowed in this condition, it is not an available option.
C. Correct.
D. First part is correct. Second part is plausible as this method is an acceptable method to comply with 3.8.1 G, and this would result in maintaining forced circulation in the event of a subsequent loss of offsite power, however since this option would result in the inoperability of offsite sources, TSB lists this option as less preferential than blocking fast bus transfer.

Question Source:	**x**	**Bank**	
		Modified Bank	
		New	
	x	**Previous NRC Exam**	2016 SRO Exam

Question Cognitive Level:		**Memory or Fundamental Knowledge**
	x	**Comprehension or Analysis**
	3	**Level of Difficulty**

10 CFR Part 55 Content:	**43.2**

Reference Provided:	**None**

Learning Objective:	Identify the basis of Technical Specification LCOs for section 3.8 in accordance with Tech Spec 3.8 basis

SRO Justification:

Figure 2-1 Screening for SRO-Only Linked to 10 CFR 55.43(b)(2) (Technical Specifications)

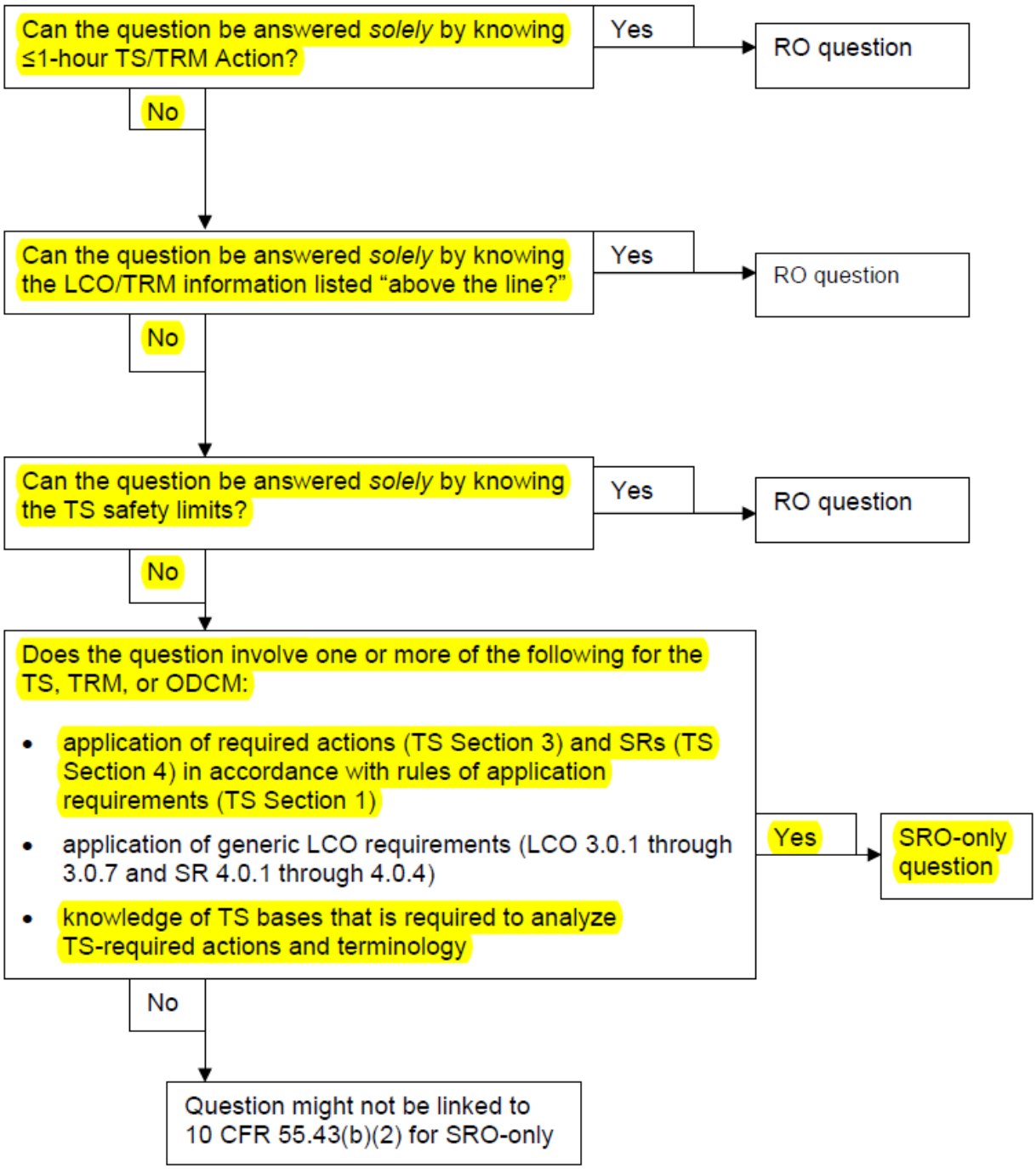

Technical Reference: Technical Specification 3.8.1

ACTIONS (continued)

CONDITION	REQUIRED ACTION	COMPLETION TIME
G. One or more required offsite circuit(s) do not meet required capability.	G.1 Restore required capability of the offsite circuit(s). OR ----------NOTE---------- Enter LCO 3.8.1 Condition A or C for required offsite circuit(s) inoperable. ---------- G.2 Transfer the ESF bus(es) from the offsite circuit(s) to the EDG(s).	1 hour 1 hour

Technical Reference: Technical Specification Bases

BASES

ACTIONS

G.1 and G.2 (continued)

If the required capability in Condition G is not met, the following options are available to restore full or partial Operability. Options are listed in their order of preference.

1. Achieve Condition 1 as discussed above (switchyard voltage at or above the minimum allowable value). This is accomplished by either of the following:

   - Increase switchyard voltage. If more than one Palo Verde unit is operating, switchyard voltage is increased by increasing MVAR output of any Palo Verde unit, or by any number of methods implemented by the Energy Control Center. If only one Palo Verde unit is operating, switchyard voltage is increased by any number of methods implemented by the Energy Control Center while maintaining the generator gross MVAR output of the Palo Verde unit to ≤ 0.

   - Reduce minimum allowable voltage as calculated above. This is achieved by realignment of equipment power sources, if such an option is available.

2. Achieve Condition 2 as discussed above. This is accomplished by ensuring the affected tie breaker (NAN-S03B or NAN-S04B) is open and the fast bus transfer control switch (NAN-HK-S03B or NAN-HK-S04B) is in the "Manual" position. If two units are sharing a startup transformer secondary winding, this condition must be achieved in both units. Although Palo Verde has no formal restrictions on the amount of time that fast bus transfer can be out of service, this option should be used judiciously in order to maintain forced circulation capability.

3. Transfer the safety bus(es) to the diesel generator(s). This is less desirable than option 2, because it would perturb the plant. It would cause the plant to remain in an LCO 3.8.1 condition (A or C, depending on whether one or two buses are transferred).

Examination Outline Cross-reference:	Level	RO		SRO
	Tier #			1
	Group #			2
	K/A #	033 G 2.1.7		
	Importance Rating			4.7
K/A: Loss of Intermediate Range NI: Ability to evaluate plant performance and make operational judgments based on operating characteristics, reactor behavior, and instrument interpretation				

Question 82

Given the following conditions:

- Unit 1 spuriously tripped from 100% power
- The unit has been maintained in MODE 3 since the trip
- A Reactor startup is in progress using 40OP-9ZZ03, Reactor Startup

Subsequently:

- The Channel 'B' Log Safety Channel NI failed low and was declared inoperable
- The Channel 'B' Log Power High trip bistable has been bypassed to comply with LCO 3.3.2, RPS Instrumentation – Shutdown

In this condition, Unit 1 ___(1)___ enter MODE 2 ___(2)___ .

A. (1) may NOT
(2) because all four Log Safety Channel NIs are required to be OPERABLE PRIOR to entering MODE 2

B. (1) may NOT
(2) since the provisions of LCO 3.0.4 may only be used to enter a lower MODE in which an LCO is not met

C. (1) MAY
(2) because the Log Power High trip function is NOT required to be OPERABLE in MODE 2

D. (1) MAY
(2) By invoking LCO 3.0.4 since the required actions in LCO 3.3.1, RPS Instrumentation – Operating, allow for continued operation for an unlimited period of time

Answer: D

Explanation:

A. Plausible since all four log safety channels are required to be operable in MODE 2, and all four must be operable prior to entering MODE 2 if following the next MODE 5 entry, however since the unit was maintained in MODE 3 following the trip, entry into MODE 2 is allowable.
B. Plausible since there are instances in which LCO 3.0.4 must be used in order to go to a lower MODE when an LCO is not met in that MODE, and it is plausible to think that all required equipment must be operable in order to go to a higher MODE, however LCO 3.0.4 may be invoked to go to a higher or lower MODE.
C. First part is correct. Second part is plausible since the Log Power High trip function is not required in MODE 2 after power has exceeded 1 x 10^{-4}, however it is required to be OPERABLE at the point where MODE 2 is entered.
D. Correct.

Question Source:		**Bank**	
		Modified Bank	
	x	**New**	
		Previous NRC Exam	

Question Cognitive Level:		**Memory or Fundamental Knowledge**
	x	**Comprehension or Analysis**
	3	**Level of Difficulty**

10 CFR Part 55 Content:	**43.2**

Reference Provided:	**None**

Learning Objective:	Determine whether or not the LCOs of 3.3 are satisfied

SRO Justification:

Figure 2-1 Screening for SRO-Only Linked to 10 CFR 55.43(b)(2) (Technical Specifications)

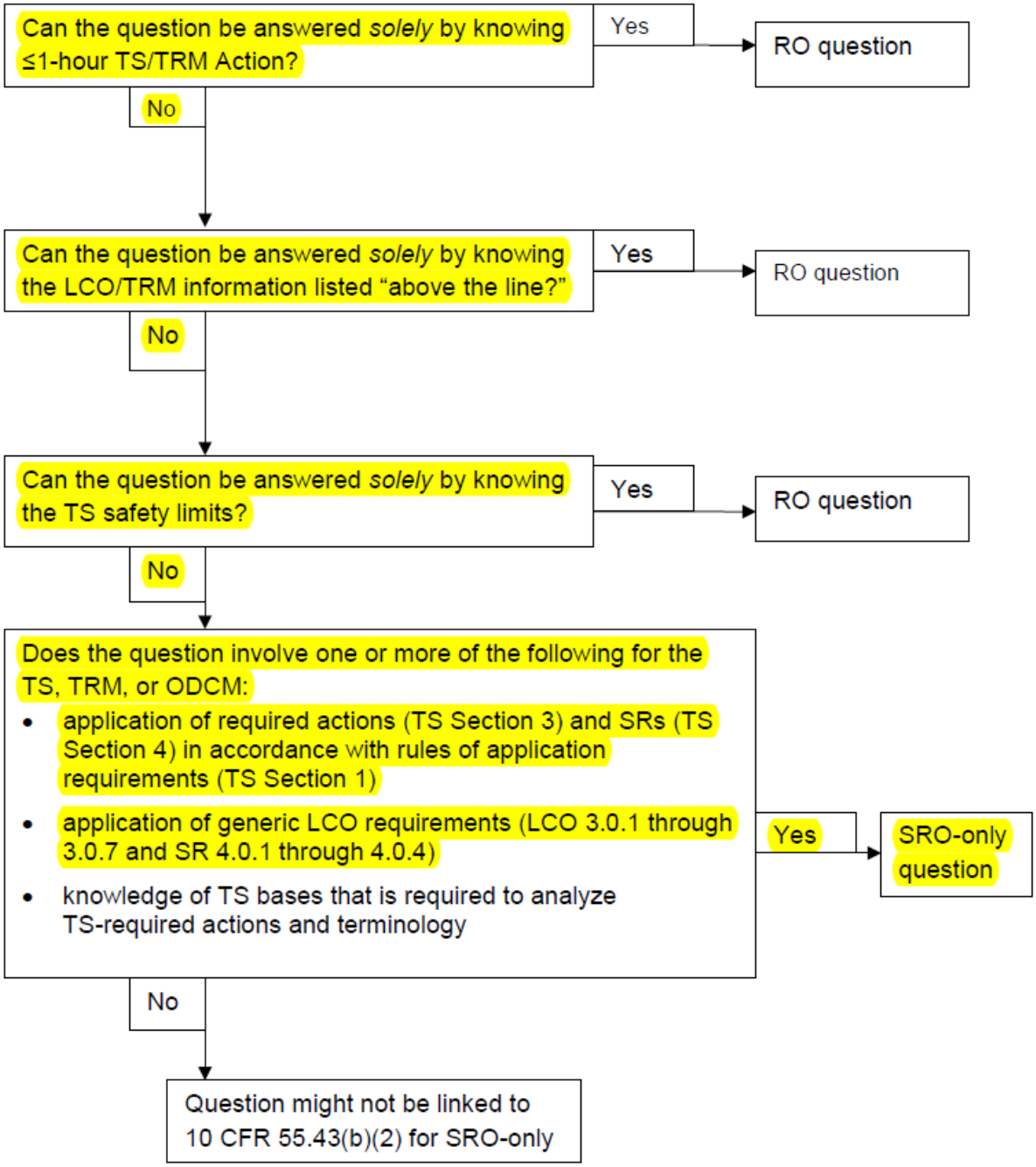

Technical Reference: Technical Specifications

3.3 INSTRUMENTATION

3.3.1 Reactor Protective System (RPS) Instrumentation – Operating

LCO 3.3.1 Four RPS trip and bypass removal channels for each Function in Table 3.3.1-1 shall be OPERABLE.

APPLICABILITY: According to Table 3.3.1-1.

ACTIONS

----------NOTE----------
Separate Condition entry is allowed for each RPS Function.

CONDITION	REQUIRED ACTION	COMPLETION TIME
A. One or more Functions with one automatic RPS trip channel inoperable.	A.1 Place channel in bypass or trip.	1 hour
	AND	
	A.2 Restore channel to OPERABLE status.	Prior to entering MODE 2 following next MODE 5 entry

Technical Reference: Technical Specifications

Table 3.3.1-1 (page 1 of 3)
Reactor Protective System Instrumentation

FUNCTION	APPLICABLE MODES OR OTHER SPECIFIED CONDITIONS	SURVEILLANCE REQUIREMENTS	ALLOWABLE VALUE
1. Variable Over Power	1,2	SR 3.3.1.1 SR 3.3.1.4 SR 3.3.1.6 SR 3.3.1.7 SR 3.3.1.8 SR 3.3.1.9 SR 3.3.1.13	Ceiling ≤ 111.0% RTP Band ≤ 9.9% RTP Incr. Rate ≤ 11.0%/min RTP Decr. Rate > 5%/sec RTP
2. Logarithmic Power Level – High[a]	2	SR 3.3.1.1 SR 3.3.1.7 SR 3.3.1.9 SR 3.3.1.12 SR 3.3.1.13	≤ 0.011% NRTP

Technical Reference: Technical Specifications

LCO 3.0.4 When an LCO is not met, entry into a MODE or other specified condition in the Applicability shall only be made:

a. When the associated ACTIONS to be entered permit continued operation in the MODE or other specified condition in the Applicability for an unlimited period of time;

Examination Outline Cross-reference:	Level	RO		SRO
	Tier #			1
	Group #			2
	K/A #	051 AA2.02		
	Importance Rating			4.1
K/A: Loss of Condenser Vacuum: Ability to determine and interpret the following as they apply to the Loss of Condenser Vacuum: Conditions requiring reactor and/or turbine trip				

Question 83

Given the following conditions:

- Unit 1 is operating at 85% power
- Condenser backpressure is 5.1 inches HgA and degrading at 0.1 HgA/minute
- The CRS has entered 40AO-9ZZ07, Loss of Condenser Vacuum
- A 10%/hr down power is in progress due to degrading condenser vacuum
- ASI just exceeded the limits specified in the Core Operating Limits Report (COLR)

Based on these conditions, the CRS will enter LCO 3.2.5, Axial Shape Index (ASI), Condition A and must restore ASI to within limits within a MAXIMUM of _____(1)_____ hours; and if condenser vacuum continues to degrade to >7 inches HgA, the CRS should direct a manual _____(2)_____ .

A. (1) 2
(2) reactor trip

B. (1) 2
(2) turbine trip

C. (1) 4
(2) reactor trip

D. (1) 4
(2) turbine trip

Answer: A

Explanation:

A. Correct.
B. First part is correct. Second part is plausible since tripping the turbine on a degraded vacuum is the correct action when the Main Generator is not synched to the grid, however at 85% power, 7 inches of backpressure requires a reactor trip.
C. First part is plausible since lowering power to < 20% in 4 hours is a required action if ASI is not restored to within limits in 2 hours, however the time limit to restore ASI is 2 hours. Second part is correct.
D. First part is plausible since lowering power to < 20% in 4 hours is a required action if ASI is not restored to within limits in 2 hours, however the time limit to restore ASI is 2 hours. Second part is plausible since tripping the turbine on a degraded vacuum is the correct action when the Main Generator is not synched to the grid, however at 85% power, 7 inches of backpressure requires a reactor trip.

Question Source:		**Bank**	
		Modified Bank	
	x	**New**	
		Previous NRC Exam	

Question Cognitive Level:		**Memory or Fundamental Knowledge**
	x	**Comprehension or Analysis**
	3	**Level of Difficulty**

10 CFR Part 55 Content:	**43.2**

Reference Provided:	**None**

Learning Objective:	Apply the action statements that are greater than one hour for TS 3.2

SRO Justification:

Figure 2-1 Screening for SRO-Only Linked to 10 CFR 55.43(b)(2) (Technical Specifications)

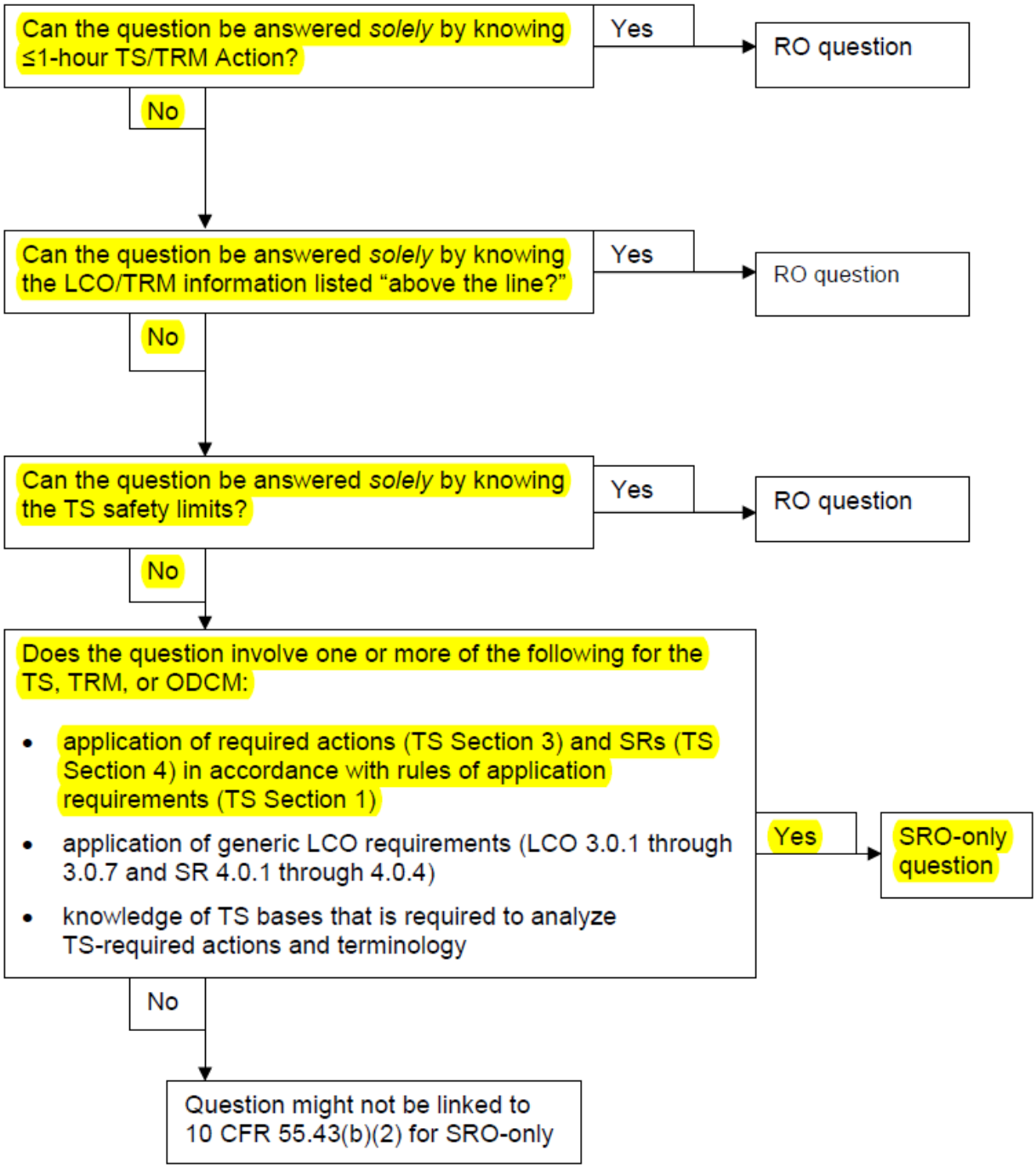

Technical Reference: Technical Specifications

3.2 POWER DISTRIBUTION LIMITS

3.2.5 AXIAL SHAPE INDEX (ASI)

LCO 3.2.5 ASI shall be within the limits specified in the COLR.

APPLICABILITY: MODE 1 with THERMAL POWER > 20% RTP.

ACTIONS

CONDITION	REQUIRED ACTION	COMPLETION TIME
A. Core average ASI not within limits.	A.1 Restore ASI to within limits.	2 hours
B. Required Action and associated Completion Time not met.	B.1 Reduce THERMAL POWER to ≤ 20% RTP.	4 hours

Technical Reference: 40AO-9ZZ07, Loss of Condenser Vacuum

3.0 DIAGNOSTIC

Action may be taken prior to reaching specified limits based on trends

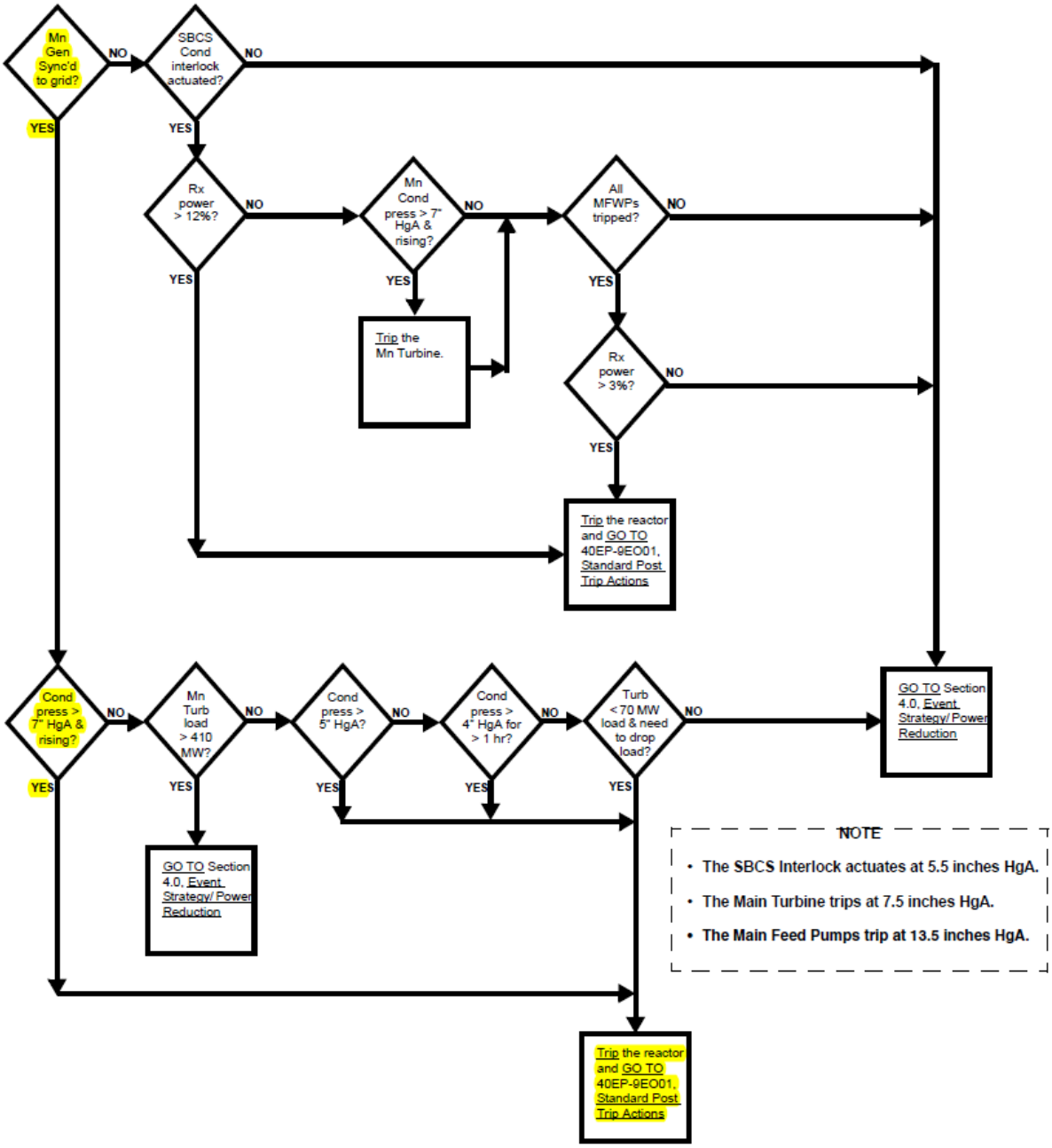

NOTE

- The SBCS Interlock actuates at 5.5 inches HgA.
- The Main Turbine trips at 7.5 inches HgA.
- The Main Feed Pumps trip at 13.5 inches HgA.

Examination Outline Cross-reference:	Level	RO		SRO
	Tier #			1
	Group #			2
	K/A #	067 G 2.1.20		
	Importance Rating			4.6
K/A: Plant Fire On-Site: Ability to interpret and execute procedure steps				

Question 84

Given the following conditions:

- The Control Room has been evacuated due to a fire in the Satellite Technical Support Center (STSC).
- The reactor has been manually tripped.
- The crew has evacuated to the Remote Shutdown Panel.
- The Emergency Coordinator has declared an ALERT due to the Control Room Evacuation

(1) Per 40AO-9ZZ19, Control Room Fire, and 40DP-9ZZ04, Time Critical Action Program, the crew must ensure they ___(1)___ within a MAXIMUM of 5 minutes from the reactor trip

(2) The Emergency Coordinator must notify State and Local agencies within a MAXIMUM of ___(2)___ from the time of the EAL declaration.

A. (1) place the ADV disconnect switches to LOCAL
(2) 15 minutes

B. (1) place the ADV disconnect switches to LOCAL
(2) 1 hour

C. (1) close CHB-UV-515, Letdown to Regen HX Isolation Valve
(2) 15 minutes

D. (1) close CHB-UV-515, Letdown to Regen HX Isolation Valve
(2) 1 hour

Answer: A

Explanation:

A. Correct.
B. First part is correct. Second part is plausible since one hour is the time limit to notify the NRC, however state and local agencies are required to be notified within 15 minutes.
C. First part is plausible as this action is a time critical action required during a fire which causes the control room to be evacuated, however this is a 20 minute required action. Second part is correct.
D. First part is plausible as this action is a time critical action required during a fire which causes the control room to be evacuated, however this is a 20 minute required action. Second part is plausible since one hour is the time limit to notify the NRC, however state and local agencies are required to be notified within 15 minutes.

Question Source:		**Bank**	
	x	**Modified Bank**	Modified from 2016 SRO Exam
		New	
		Previous NRC Exam	

Question Cognitive Level:	**x**	**Memory or Fundamental Knowledge**
		Comprehension or Analysis
	3	**Level of Difficulty**

10 CFR Part 55 Content:	**43.1**

Reference Provided:	**None**

Learning Objective:	Perform the administrative duties of the Emergency Coordinator

SRO Justification:
Administration of the Emergency Plan is a condition of the facility license and is an SRO only job function.

Original Question:

Plant Fire On-site: Ability to determine and interpret the following as they apply to the Plant Fire on Site: Vital equipment and control systems to be maintained and operated during a fire

Proposed Question: SRO 84

Given the following conditions:

- The Unit 2 Control Room is being evacuated due to a fire in the Unit 2 Satellite Technical Support Center (STSC).
- The reactor has been manually tripped.
- The crew has evacuated to the Remote Shutdown Panel.
- Fire Department declared the fire extinguished 20 minutes after the start of the fire.
- Damage is limited to the STSC.

Per 40AO-9ZZ19, Control Room Fire, and 40DP-9ZZ04, Time Critical Action Program, the crew must ensure they _____(1)_____ within a MAXIMUM of 5 minutes from the reactor trip, and the Emergency Coordinator should classify the event as _____(2)_____.

A. 1. place the ADV disconnect switches to LOCAL
   2. HA2

B. 1. place the ADV disconnect switches to LOCAL
   2. HA5

C. 1. close CHB-UV-515, Letdown to Regen HX Isolation Valve
   2. HA2

D. 1. close CHB-UV-515, Letdown to Regen HX Isolation Valve
   2. HA5

Proposed Answer: B

Technical Reference: 40AO-9ZZ19, Control Room Fire

3.0 CONTROL ROOM FIRE

INSTRUCTIONS | CONTINGENCY ACTIONS

---------- **NOTE** ----------

Steps 6 and 7 are expected to be performed by the CRS.

____ 6. Place **BOTH** of the following disconnect switches on Remote Shutdown Panel E01 in "L" (Local):

- SGD-HS-178J, SG 1 Line 2 ADV Isolation Valve HY-178B Disconnect
- SGD-HS-185J, SG 2 Line 1 ADV Isolation Valve HY-185B Disconnect

Technical Reference: 40DP-9ZZ04, Time Critical Action Program

Time Critical Action (TCA) Program	40DP-9ZZ04	Revision 13
	Appendix D Page 1 of 14	

Appendix D - Time Critical Actions Catalog

TCA	Action	Time Limit	Time Zero	Validation Method	Procedure	Org	Source Document (other info)
TCA-1	Initiate MSIS	90 seconds	Manual Reactor Trip	Simulator	40AO-9ZZ19	Ops	13-MC-FP-318 (40A0-9ZZ19, Section 3.0)
TCA-2	ADV Disconnects to LOCAL	5 minutes	Manual Reactor Trip	Walkdown	40AO-9ZZ19	Ops	13-MC-FP-318 (40A0-9ZZ19, Section 3.0)
TCA-3	Close CHB-UV-515	20 minutes	Manual Reactor Trip	Walkdown	40AO-9ZZ19	Ops	13-MC-FP-318 (40A0-9ZZ19, Section 3.0)

Technical Reference: EP-0902, Notifications

Notifications	EP-0902	Revision 9

3.0 PRECAUTIONS AND LIMITATIONS

3.1 Precautions

3.1.1 None

3.2 Limitations

3.2.1 Place keeping within this procedure is conducted using individual ERO Checklists from EP-0900, Emergency Response Organization (ERO) Position Checklists.

3.2.2 Notification to offsite agencies is required within 15 minutes of:

- Initial Classification of the Emergency
- Change in the Classification
- Change in Protective Action Recommendations (PARs) for the public, including changes in wind direction resulting in PARs affecting additional meteorological sectors
- Change in Radiological Release Status
- Event Termination

Examination Outline Cross-reference:	Level	RO		SRO
	Tier #			1
	Group #			2
	K/A #	076 AA2.01		
	Importance Rating			3.2
K/A: High Reactor Coolant Activity: Ability to determine and interpret the following as they apply to the High Reactor Coolant Activity: Location or process point that is causing an alarm				

Question 85

The PRIMARY indication of possible fuel cladding failure and elevated RCS activity is provided by ___(1)___ and per the Technical Specification Bases for LCO 3.4.17, RCS Specific Activity, adherence to RCS activity limits will ensure ___(2)___ .

A. (1) Letdown Line Radiation Monitor RU-155D
(2) control room personnel do not exceed 5 rem during a postulated LOCA

B. (1) Letdown Line Radiation Monitor RU-155D
(2) offsite and control room doses do not exceed limits in the event of a SGTR

C. (1) Primary Coolant Activity Monitors RU-150 and RU-151
(2) control room personnel do not exceed 5 rem during a postulated LOCA

D. (1) Primary Coolant Activity Monitors RU-150 and RU-151
(2) offsite and control room doses do not exceed limits in the event of a SGTR

Answer: B

Explanation:

A. First part is correct. Second part is plausible since preventing 5 rem in the control room following a postulated accident is the basis for the CREFS system, however RCS activity limits ensure offsite and control room dose limits are not exceeded following a SGTR.
B. Correct.
C. First part is plausible since RU-150 and RU-151 monitor RCS activity during post accident conditions, however the primary indication of fuel cladding failure and elevated RCS activity is RU-155D. Second part is plausible since preventing 5 rem in the control room following a postulated accident is the basis for the CREFS system, however RCS activity limits ensure offsite and control room dose limits are not exceeded following a SGTR.
D. First part is plausible since RU-150 and RU-151 monitor RCS activity during post accident conditions, however the primary indication of fuel cladding failure and elevated RCS activity is RU-155D. Second part is correct.

Question Source:		**Bank**	
		Modified Bank	
	x	**New**	
		Previous NRC Exam	

Question Cognitive Level:	**x**	**Memory or Fundamental Knowledge**
		Comprehension or Analysis
	2	**Level of Difficulty**

10 CFR Part 55 Content:	**43.2**

Reference Provided:	**None**

Learning Objective:	The operator will demonstrate mastery of the bases for Tech Spec 3.4.17

SRO Justification:

Figure 2-1 Screening for SRO-Only Linked to 10 CFR 55.43(b)(2) (Technical Specifications)

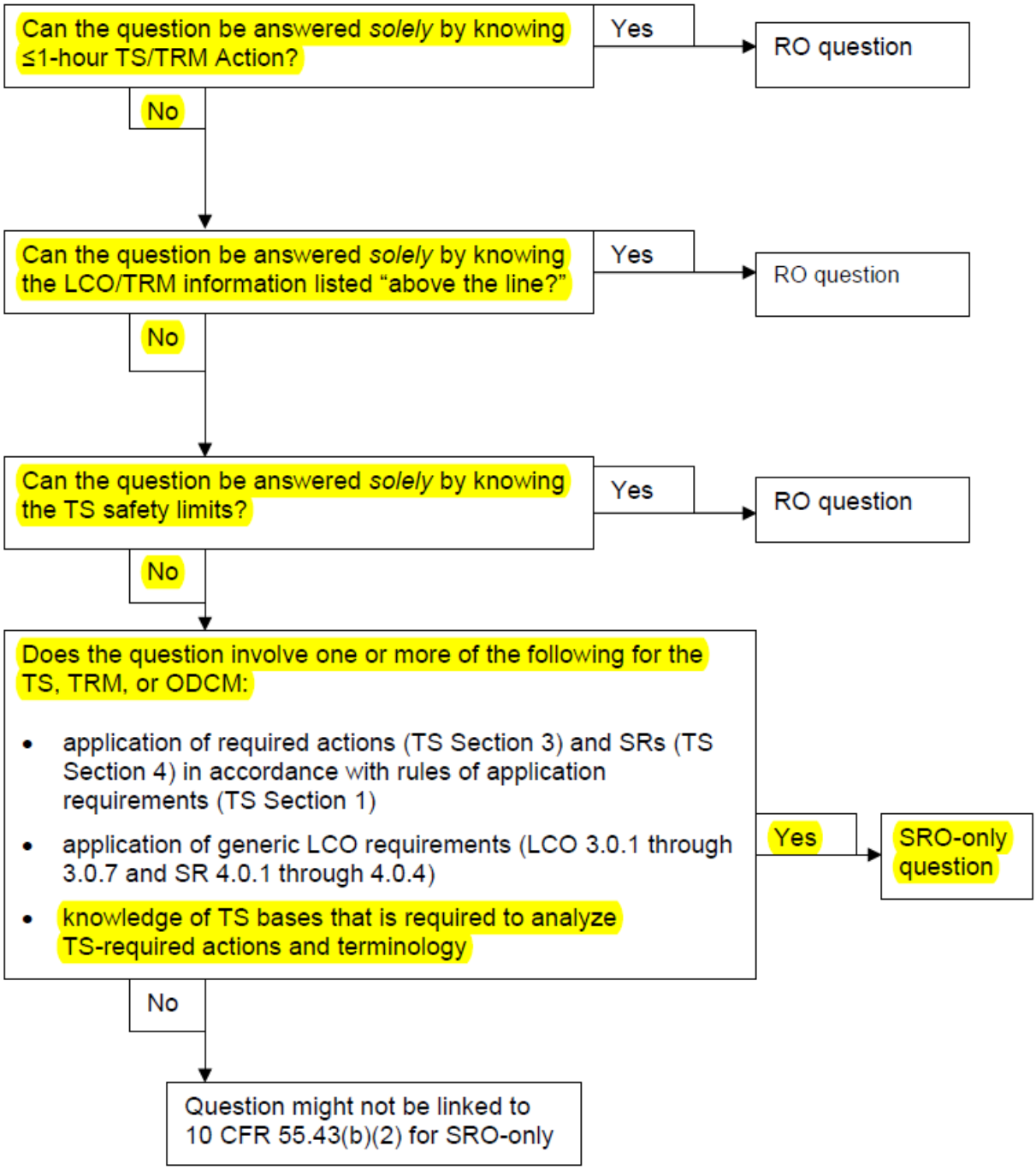

Technical Reference: Radiation Monitoring Tech Manual

2.44 Reactor Coolant Letdown Line Radiation Monitor SQN-RE-155D

This monitor is also referred to as an area monitor (ARM). The fourth available channel of penetration leakage monitor (SQN-RU-155) is used to trend the letdown primary coolant activity. This area radiation monitor provides a continuous recording in the control room of reactor coolant gross gamma activity thus providing a measure of fuel cladding integrity. A high alarm is provided in the control room. Local and remote samples in the CVCS provide the primary means for determining RCS activity. The reactor coolant letdown line monitor serves only as a trending device to warn the operator of possible fuel cladding failure. Verification of the ARM is done by grab sample measurement.

Technical Reference: Radiation Monitoring Tech Manual

2.42 Primary Coolant Activity Monitors, (PCMA) SQA-RU-150 and (PCMB) SQB-RU-151

The primary coolant activity monitors consist of two independent ionization chamber channels. These monitors meet the monitoring requirements of NUREG-0737 and regulatory guide 1.97, Rev 2 for the circulating coolant activity monitors. The purpose of these monitors is to assess activity levels in the primary coolant under post accident conditions. The detectors are physically located next to a cold leg of each of the steam generators. These monitors are included as part of the SRMS, and meet IE qualification requirements as described in IEEE standard 323- 1974. These monitors are equipped with a RIC module to provide monitor control and indication in the event of DCU failure. The RIC is mounted in the SRMS panel in the control room with the balance of the safety related monitor RIC units. The micro-computers for these monitors are located in the control building to take advantage of the low radiation fields afforded by this category I structure (see drawings 13-J-ZCF-006, 13-J-ZCF-005 and 13-J-ZCF-009).

Technical Reference: Technical Specification Bases

BASES

B 3.4 REACTOR COOLANT SYSTEM (RCS)

B 3.4.17 RCS Specific Activity

BASES

BACKGROUND

The maximum dose that an individual at the exclusion area boundary can receive for 2 hours following an accident, or at the low population zone outer boundary for the radiological release duration, is specified in 10 CFR 100.11 (Ref. 1). Doses to control room operators must be limited per GDC 19. The limits on specific activity ensure that the offsite and control room doses are appropriately limited during analyzed transients and accidents.

The RCS specific activity LCO limits the allowable concentration level of radionuclides in the reactor coolant. The LCO limits are established to minimize the dose consequences in the event of a steam generator tube rupture (SGTR) accident.

The LCO contains specific activity limits for both DOSE EQUIVALENT I-131 and DOSE EQUIVALENT XE-133. The allowable levels are intended to ensure that offsite and control room doses meet the 10 CFR 100.11 (Ref. 1) and GDC 19 limits respectively.

APPLICABLE SAFETY ANALYSES

The LCO limits on the specific activity of the reactor coolant ensure that the resulting offsite and control room doses meet the 10 CFR 100.11 (Ref. 1) and GDC 19 limits following a SGTR accident. The safety analysis (Ref. 2) assumes the specific activity of the reactor coolant is at the LCO limits, and an existing reactor coolant steam generator (SG) tube leakage rate of 1.0 gpm exists. The safety analysis assumes the specific activity of the secondary coolant is at its limit of 0.1 μCi/gm DOSE EQUIVALENT I-131 from LCO 3.7.16, "Secondary Specific Activity."

Technical Reference: Technical Specification Bases

BASES

BACKGROUND (continued)

Actuation of CREFS aligns the system for recirculation of the air within the CRE through the redundant trains of HEPA and charcoal filters. Actuation of the CREFS also initiates pressurization and filtered ventilation of the air supply to the CRE.

Outside air is combined and filtered with the air being recirculated from the CRE. Pressurization of CRE minimizes infiltration of unfiltered air from all the surrounding areas adjacent to the CRE boundary.

The air entering the CRE is continuously monitored by radiation detectors. One detector output above the setpoint will cause actuation of the CREFS trains.

A single CREFS train operating at a flow rate of ≤1000 cfm is designed to pressurize the CRE to ≥ 0.125 inches water gauge relative to external areas adjacent to the CRE boundary. The CREFS operation in maintaining the CRE habitable is discussed in the UFSAR, Section 6.4 (Ref. 1).

Redundant recirculation trains provide the required filtration. Normally open isolation dampers in the normal Control Room HVAC System are arranged in series pairs so that the failure of one damper to shut will not result in a breach of isolation. The CREFS is designed in accordance with Seismic Category I requirements.

The CREFS is designed to maintain a habitable environment in the CRE for 30 days of continuous occupancy after a Design Basis Accident (DBA) without exceeding a 5 rem whole body dose or its equivalent to any part of the body to the CRE occupants in the event of a large radioactive release.

Examination Outline Cross-reference:	Level	RO		SRO
	Tier #			2
	Group #			1
	K/A #	062 G 2.2.25		
	Importance Rating			4.2
K/A: AC Electrical Distribution: Knowledge of the bases in Technical Specifications for limiting conditions for operations and safety limits				

Question 86

To meet operability requirements for Train ‘A’ per LCO 3.8.9 Distribution Systems – Operating, a MINIMUM of ___(1)___ Class 480V Load Centers must be OPERABLE, and a MINIMUM of ___(2)___ Class 480V Motor Control Centers must be OPERABLE.

A. (1) 2
(2) 3

B. (1) 2
(2) 4

C. (1) 3
(2) 3

D. (1) 3
(2) 4

Answer: D

Explanation:

A. First part is plausible since only two LCs are needed to ensure power to the Train 'A' DC buses through the Battery Chargers. Second part is plausible since there are three LCs which provide power to the MCCs, so it is plausible that you would need only three MCCs OPERABLE to deliver power to the PK and PN buses.
B. First part is plausible since only two LCs are needed to ensure power to the Train 'A' DC buses through the Battery Chargers. Second part is correct.
C. First Part is correct. Second part is plausible since there are three LCs which provide power to the MCCs, so it is plausible that you would need only three MCCs OPERABLE to deliver power to the PK and PN buses.
D. Correct.

Question Source:		**Bank**	
		Modified Bank	
	x	**New**	
		Previous NRC Exam	

Question Cognitive Level:	**x**	**Memory or Fundamental Knowledge**
		Comprehension or Analysis
	3	**Level of Difficulty**

10 CFR Part 55 Content:	**43.2**

Reference Provided:	**None**

Learning Objective:	Identify the bases of Technical Specification LCOs for section 3.8

SRO Justfication:

Figure 2-1 Screening for SRO-Only Linked to 10 CFR 55.43(b)(2) (Technical Specifications)

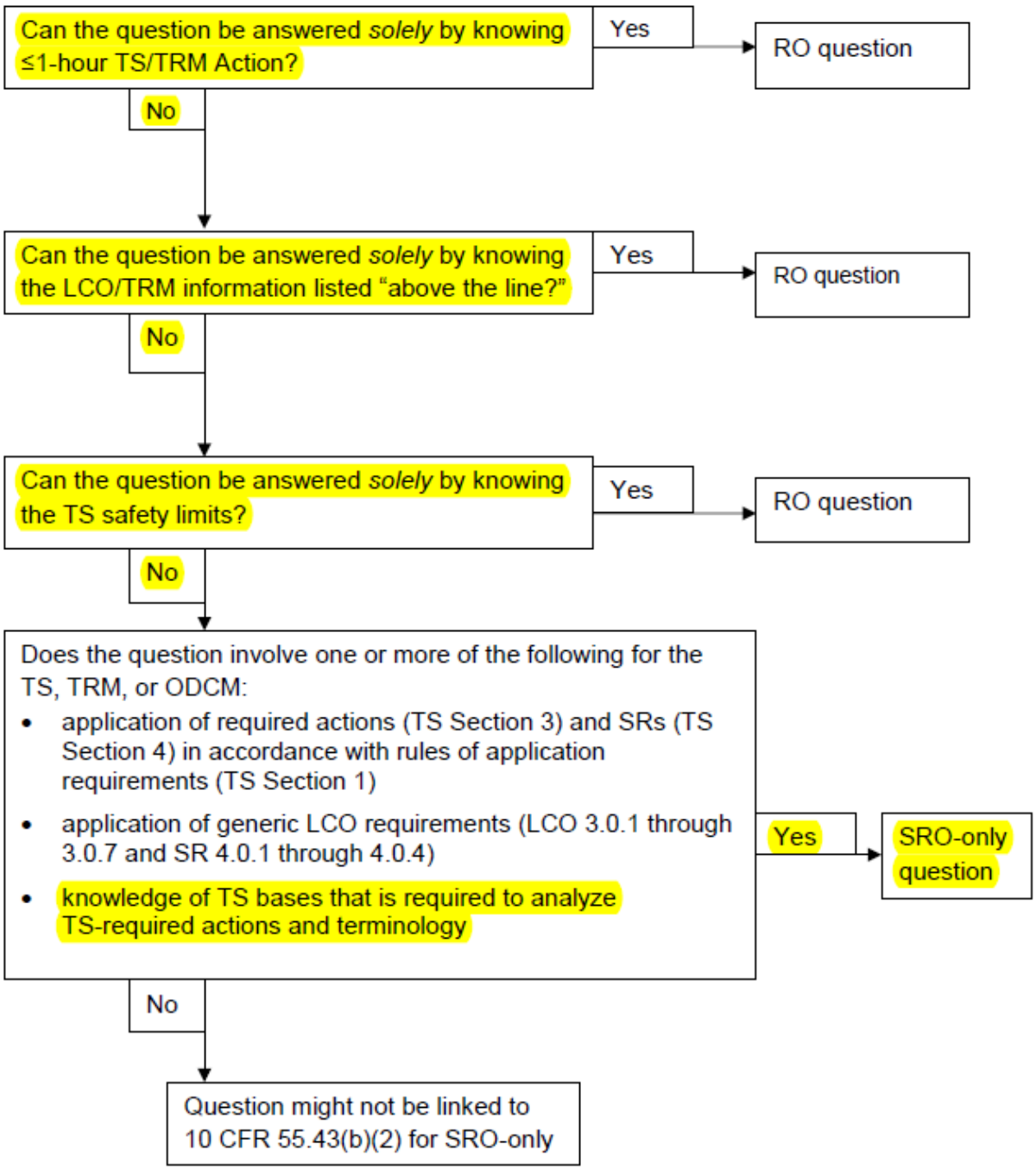

Technical Reference: Technical Specification Bases

BASES

REFERENCES

1. UFSAR, Chapter 6.
2. UFSAR, Chapter 15.
3. Regulatory Guide 1.93, Revision 0, December 1974.

Table B 3.8.9-1
(Units 1, 2, and 3)

TYPE	VOLTAGE	TRAIN A		TRAIN B	
AC safety buses	4160 V	ESF Bus PBA-S03		ESF Bus PBB-S04	
	480 V	Load Centers PGA-L31, PGA-L33, PGA-L35		Load Centers PGB-L32, PGB-L34, PGB-L36	
	480 V	Motor Control Centers PHA-M31, PHA-M33, PHA-M35, PHA-M37		Motor Control Center PHB-M32, PHB-M34, PHB-M36, PHB-M38	
DC buses	125 V	CHANNEL A	CHANNEL C	CHANNEL B	CHANNEL D
		Control Center PKA-M41 Distribution Panel PKA-D21	Control Center PKC-M43 Distribution Panel PKC-D23	Control Center PKB-M42 Distribution Panel PKB-D22	Control Center PKD-M44 Distribution Panel PKD-D24
AC vital instrumen buses	120 V	CHANNEL A	CHANNEL C	CHANNEL B	CHANNEL D
		Distribution Panel PNA-D25	Distribution Panel PNC-D27	Distribution Panel PNB-D26	Distribution Panel PND-D28

Technical Reference: Technical Specification Bases

B 3.8 ELECTRICAL POWER SYSTEMS

B 3.8.9 Distribution Systems – Operating

BASES

BACKGROUND

The onsite Class 1E AC, DC, and AC vital instrument bus electrical power distribution systems are divided into two trains. Each train has redundant and independent AC, DC, and AC vital instrument bus electrical power distribution subsystems.

The AC primary electrical power distribution system consists of two 4.16 kV Engineered Safety Feature (ESF) buses. Each 4.16 kV ESF bus is normally connected to an offsite source. If the offsite source is de-energized or disconnected, the onsite emergency DG supplies power to the 4.16 kV ESF bus. Control power for the 4.16 kV breakers is supplied from the Class 1E batteries. Additional description of this system may be found in the Bases for LCO 3.8.1, "AC Sources – Operating," and the Bases for LCO 3.8.4, "DC Sources – Operating."

The secondary AC electrical power distribution system for each train includes the safety related load centers, motor control centers and distribution panels shown in Table B 3.8.9-1.

The 120 VAC vital instrument buses are arranged in two channels per subsystem and are normally powered from the inverters. There are four channels designated as A, B, C and D for each unit. The alternate power supply for the vital instrument buses are Class 1E constant voltage source regulators powered from train-related Class 1E motor control centers and its use is governed by LCO 3.8.7, "Inverters – Operating."

There are two independent 125 VDC electrical power distribution subsystems (Train A and Train B). Each subsystem contains two DC power channels. There are four channels designated as A, B, C, and D for each unit.

The list of all required distribution buses is presented in Table B 3.8.9-1. The six electrical power distribution subsystems consist of those components identified by Table B 3.8.9-1. Load breakers not identified by this table do not impact this LCO but may impact supported system LCOs. Load breakers that are required to maintain energized those buses identified by Table B 3.8.9.-1 (e.g. PG to PH) do impact this LCO.

Examination Outline Cross-reference:	Level	RO		SRO

	Tier #			2
	Group #			1
	K/A #	063 A2.01		
	Importance Rating			3.2
K/A: DC Electrical Distribution: Ability to (a) predict the impacts of the following malfunctions or operations on the DC electrical systems; and (b) based on those predictions, use procedures to correct, control, or mitigate the consequences of those malfunctions or operations: Grounds				

Question 87

Given the following conditions:

- Unit 1 is operating at 100% power
- AFB-P01 is OOS for preventive maintenance
- Multiple grounds on PKA-M41 have caused the 'A' Battery Charger output breaker and the 'A' Battery output breaker to trip resulting in PKA-M41 de-energizing
- Control power for AFN-P01 has been transferred to the alternate source

10 seconds later:

- The Reactor tripped due to a loss of offsite power

How should the CRS direct the crew to mitigate these events?

A. Restore feed during SPTAs using AFA-P01 and transition to 40OP-9EO07, LOOP/LOFC

B. Restore feed during SPTAs using AFN-P01 and transition to 40OP-9EO07, LOOP/LOFC

C. Following SPTAs, transition to 40EP-9EO06, Loss of Feedwater, and restore feed using Appendix 40, Local Operation of AFA-P01 Using Main Steam

D. Following SPTAs, transition to 40EP-9EO06, Loss of Feedwater, and restore feed using Appendix 41, Local Operation of AFN-P01

Answer: C

Explanation:

A. Plausible because AFA-P01 is the correct AFW Pump to use, however AFA cannot be started from the control room following the loss of PKA-M41 due to the loss of control power to the steam admission valves, and although manual operation of AFA is possible, the CRS should not give this direction until SPTAs are completed and the optimal EOP has been entered.
B. Plausible that AFN-P01 would be available since control power was shifted to the alternate source prior to the loss of offsite power, however the loss of PKA disables the 'A' EDG, therefore power is unavailable to AFN-P01. Additionally, although power could be aligned for AFN via the 'B' EDG, this action is not directed until the Functional Recovery has been entered (which wouldn't be done in this case due to actions to recover feed being available in the LOFW EOP).
C. Correct.
D. Plausible since transition to the LOFW EOP is the correct action following SPTAs, however local operation of AFN-P01 will not be available until the failure of PKA has been corrected or the Train 'A' 4kV bus has been re-energized via the 'B' EDG.

Question Source:		**Bank**	
		Modified Bank	
	x	**New**	
		Previous NRC Exam	

Question Cognitive Level:		**Memory or Fundamental Knowledge**
	x	**Comprehension or Analysis**
	3	**Level of Difficulty**

10 CFR Part 55 Content:	**43.5**

Reference Provided:	**None**

Learning Objective:	Describe the expected actions if a SFSC criteria is not satisfied

SRO Justfication:

Figure 2-2 Screening for SRO-Only Linked to 10 CFR 55.43(b)(5) (Assessment and Selection of Procedures)

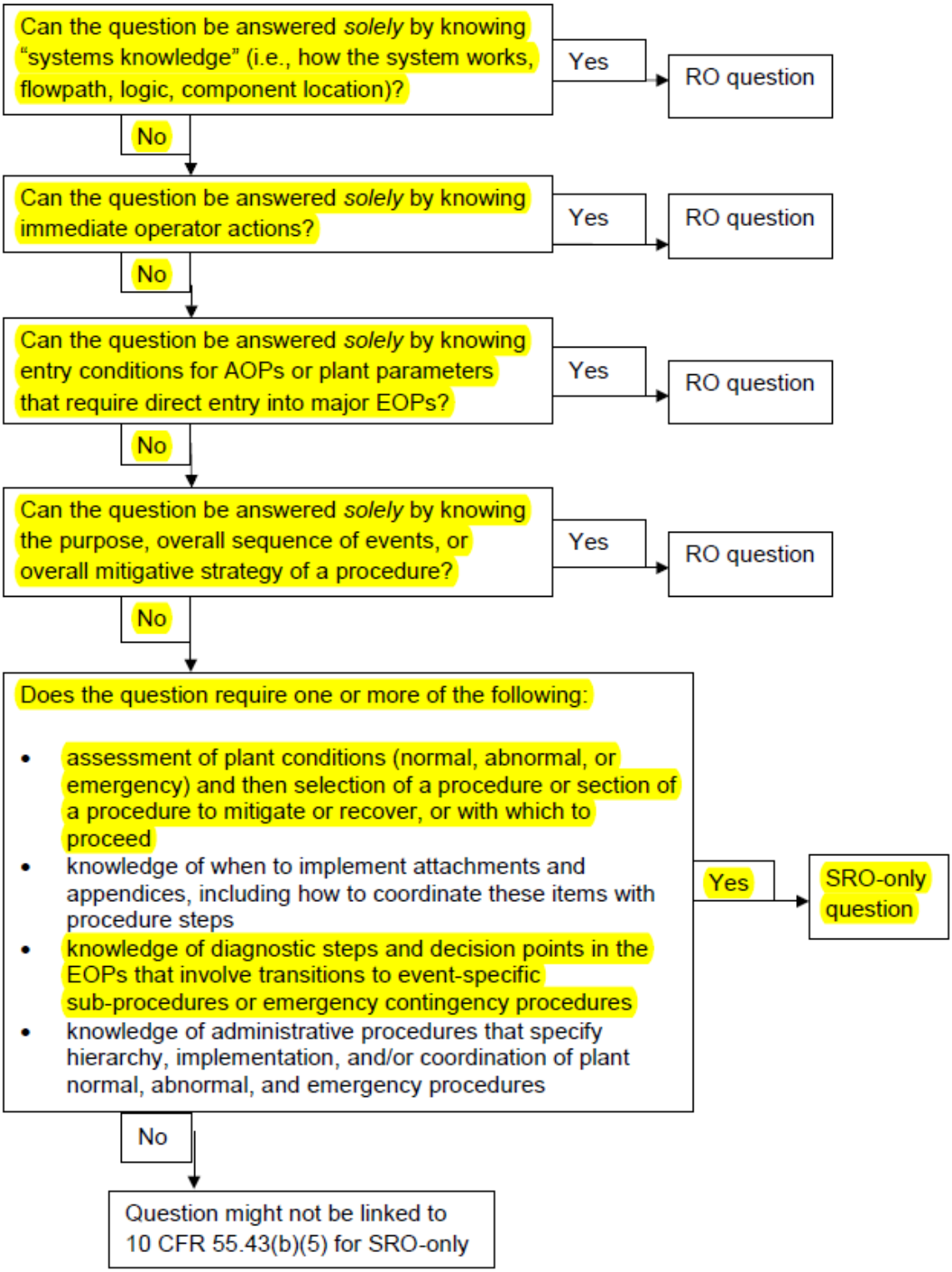

Technical Reference: PVNGS EOP Operations Expectations

4.0 STANDARD POST TRIP ACTIONS (SPTAs)

SPTA Step: ALL

1. The CRS may use 1, 2, or 3 ROs to complete SPTAs. Normally 2 or 3 will be used. With 3 ROs, the third RO normally checks MVA, then checks the RMS. The ROs are to be flexible and gather information as requested by the CRS.
2. The STA and SM have to be careful not to disrupt the close teamwork of the CRS and the ROs during the SPTAs. Normally, the SM and STA should remain behind the communications console during SPTAs.
3. Unless otherwise noted, the SPTAs consist of quick actions from the control room. Any other actions directed by the CRS during SPTAs should conform to this rule.

Technical Reference: PVNGS Operator Information Manual

A hard ground on PKA-M41 would also result in a loss of PKA-D21, however backup control power to AFN-P01 would be available.

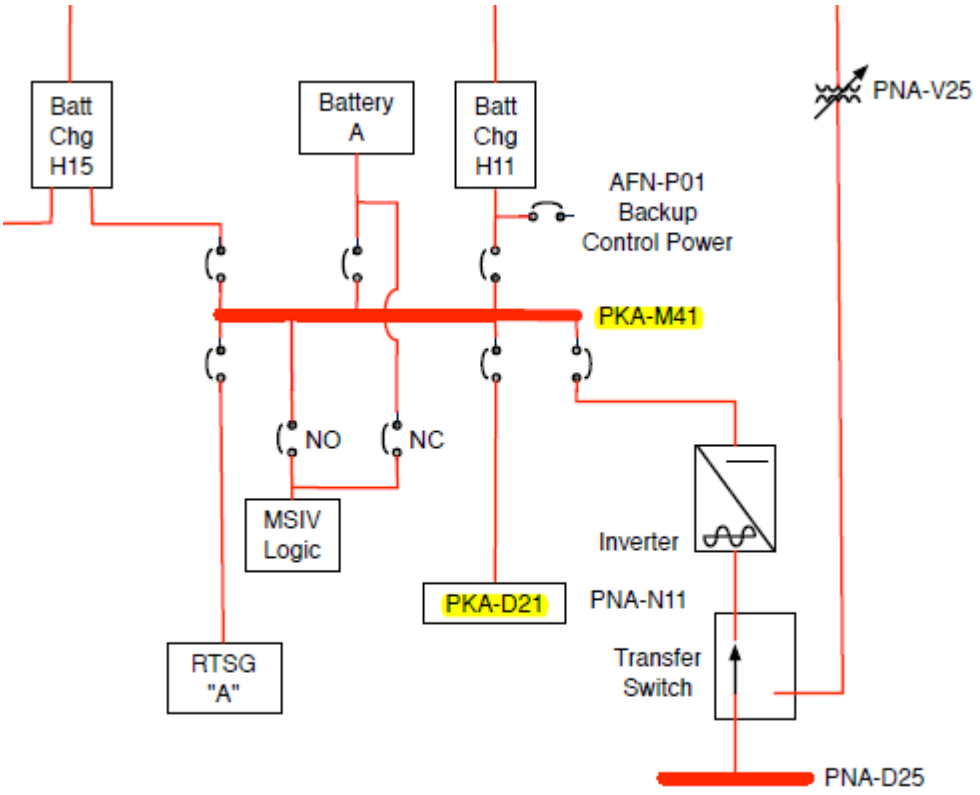

Technical Reference: 40AO-9ZZ13, Loss of Class Instrument or Control Power

PALO VERDE NUCLEAR GENERATING STATION	40AO-9ZZ13 Revision 30 Page 88 of 184
LOSS OF CLASS INSTRUMENT OR CONTROL POWER	Appendix A Page 2 of 6

Appendix A, Effects of the Loss of Channel A

System	PKA M41	PKA D21	PNA D25	Response
DG	X	X		DG A controls, starting circuit and electrical protection control power is lost. DG A trips if running and its output breaker, if closed, will remain closed due to loss of control power. If paralleled with offsite power the diesel will motorize.

Technical Reference: 40EP-9EO06, Loss of All Feedwater

INSTRUCTIONS

6. Restore feed to at least one Steam Generator using **ANY** of the following:

AUXILARY FEEDWATER

- Appendix 38, Resetting AFA-P01
- Appendix 39, Local Operation of AFB-P01
- Appendix 40, Local Operation of AFA-P01 Using Main Steam
- Appendix 41, Local Operation of AFN-P01
- Appendix 42, Aligning Aux Feedwater Pumps Suction to RMWT
- Appendix 112, Manual Operation of AFA-P01 During a Security Event

MAIN FEEDWATER

- Appendix 43, Restarting MFPs

CONTINGENCY ACTIONS

6.1 Perform the following to establish a low pressure feedwater source:

a. **IF ALL** of the following:

- Auxiliary or Main Feedwater can **NOT** be restored
- Offsite power is available
- Feeding a Steam Generator with a condensate pump is desired

THEN PERFORM Appendix 44, Feeding with the Condensate Pumps.

b. **IF** feeding a Steam Generator with a fire pump is desired, **THEN** PERFORM Appendix 118, Cross-connect FP to AF.

6.2 **IF** feed to at least one Steam Generator can **NOT** be restored, **THEN** GO TO 40EP-9EO09, Functional Recovery to perform **ANY** of the following:

- Cross tie electrical buses to restore an Auxiliary Feedwater Pump
- Align a Condensate Pump to feed the Steam Generator(s)

Examination Outline Cross-reference:	Level	RO		SRO
	Tier #			2
	Group #			1
	K/A #	073 A2.02		
	Importance Rating			3.2
K/A: Process Radiation Monitoring: Ability to (a) predict the impacts of the following malfunctions or operations on the PRM system; and (b) based on those predictions, use procedures to correct, control, or mitigate the consequences of those malfunctions or operations: Detector failure				

Question 88

Given the following conditions:

- A Waste Gas Decay Tank release is required
- Gaseous Radwaste Radiation Monitor RU-12 has just failed off-scale high

Which of the following describes the required action(s) in order to perform the release as planned?

In order for the release to be performed, ___(1)___ as required by ___(2)___ .

A. (1) initiate the Preplanned Alternate Sampling Program to monitor the appropriate parameter
(2) the Offsite Dose Calculation Manual

B. (1) initiate the Preplanned Alternate Sampling Program to monitor the appropriate parameter
(2) 74RM-9EF41, Radiation Monitoring System Alarm Response

C. (1) at least two technically qualified personnel must independently verify the discharge valve lineup
(2) the Offsite Dose Calculation Manual

D. (1) at least two technically qualified personnel must independently verify the discharge valve lineup
(2) 74RM-9EF41, Radiation Monitoring System Alarm Response

Answer: C

Explanation:

A. First part is plausible since this action is required by the ODCM for a failure of RU-145, Noble Gas Activity Monitor, however this is not required for a failure of RU-12. Second part is correct.
B. First part is plausible since this action is required by the ODCM for a failure of RU-145, Noble Gas Activity Monitor, however this is not required for a failure of RU-12.. Second part is plausible since the ARP provides contingency actions for alarming or failed RMs, however there are no requirements in the ARP related to gaseous releases.
C. Correct.
D. First part is correct. Second part is plausible since the ARP provides contingency actions for alarming or failed RMs, however there are no requirements in the ARP related to gaseous releases.

Question Source:	**x**	**Bank**	
		Modified Bank	
		New	
	x	**Previous NRC Exam**	2016 SRO Exam

Question Cognitive Level:	**x**	**Memory or Fundamental Knowledge**
		Comprehension or Analysis
	3	**Level of Difficulty**

10 CFR Part 55 Content:	**43.2**

Reference Provided:	**None**

Learning Objective:	Discuss the purpose and conditions under which the Gaseous Radwaste System is designed to function

SRO Justification:

B. Facility Operating Limitations in the Technical Specifications and Their Bases
[10 CFR 55.43(b)(2)]

Some examples of SRO exam items for this topic the following:

- application of required actions (TS Section 3) and surveillance requirements (SR) (TS Section 4) in accordance with rules of application requirements (TS, Section 1)
- application of generic limiting condition for operation (LCO) requirements (LCO 3.0.1 through 3.0.7; SR 4.0.1 through 4.0.4).
- knowledge of TS bases that are required to analyze TS-required actions and terminology
- same items listed above for the Technical Requirements Manual (TRM) and Offsite Dose Calculation Manual (ODCM)

SRO-only knowledge generally cannot be claimed for questions that can be answered *solely* based on knowledge of ≤1 hour action statements and the safety limits since reactor operators (ROs) are typically required to know these items.

Technical Reference: Offsite Dose Calculation Manual

TABLE 2-1

RADIOACTIVE GASEOUS EFFLUENT MONITORING INSTRUMENTATION

	INSTRUMENT	MINIMUM CHANNELS FUNCTIONAL	APPLICABILITY	ACTION
MAR 2016	1. GASEOUS RADWASTE SYSTEM			
	a. Noble Gas Activity Monitor - Providing Alarm and Automatic Termination of Release #RU-12	1	#	35

Technical Reference: Offsite Dose Calculation Manual

MAR 2016

ACTION 35 - With the number of channels FUNCTIONAL less than required by the Minimum Channels FUNCTIONAL requirement, the contents of the tank(s) may be released to the environment provided that prior to initiating the release:

a. At least two independent samples of the tanks contents are analyzed, and

b. At least two technically qualified members of the facility staff independently verify the release rate calculations and discharge valve lineup;

Otherwise, suspend release of radioactive effluents via this pathway.

Technical Reference: Offsite Dose Calculation Manual

A. Low Range Monitors

a. Noble Gas Activity Monitor #RU-145	1	##	37, 41

Technical Reference: Offsite Dose Calculation Manual

MAR 2016

ACTION 37 - With the number of channels FUNCTIONAL less than required by the Minimum Channels FUNCTIONAL requirement, effluent releases via this pathway may continue provided the actions of (a) or (b) or (c) are performed:

a. Initiate the Preplanned Alternate Sampling Program to monitor the appropriate parameter(s).

Technical Reference: 74RM-9EF41, Radiation Monitoring System Alarm Response

Radiation Monitoring System Alarm Response	74RM-9EF41	Revision 23

2.3 Radiation Protection (RP)

2.3.1 RP is responsible for ALL the following:

- evaluating the need to update/change radiological postings in response to radiation monitor alarms
- controlling of personnel exposure in response to radiation monitor alarms
- reviewing any on-going jobs and plant status with the control room and Chemistry in the evaluation of the cause for radiation monitor alarms
- Performing Section 6.3 actions

Examination Outline Cross-reference:	Level	RO		SRO
	Tier #			2
	Group #			1
	K/A #	076 G 2.4.47		
	Importance Rating			4.2
K/A: Service Water: Ability to diagnose and recognize trends in an accurate and timely manner utilizing the appropriate control room reference material.				

Question 89

Given the following Train 'A' Spray Pond indications on B02:

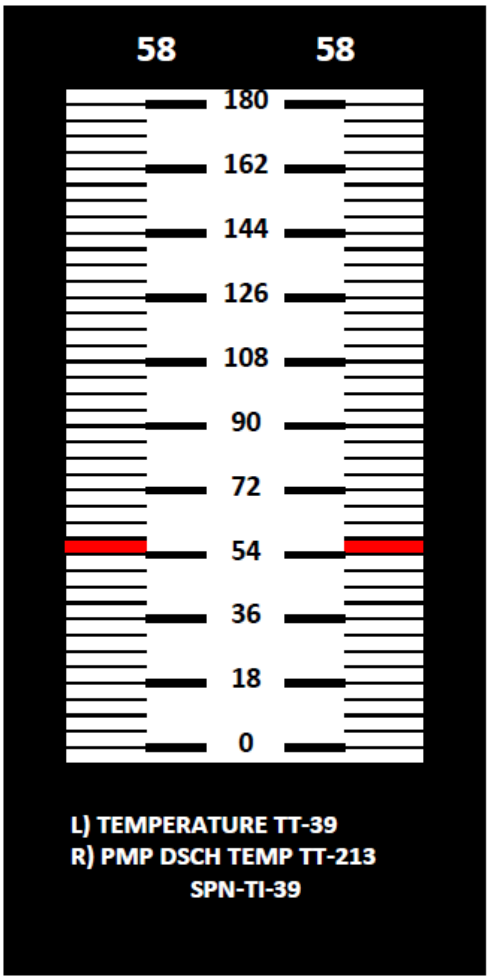

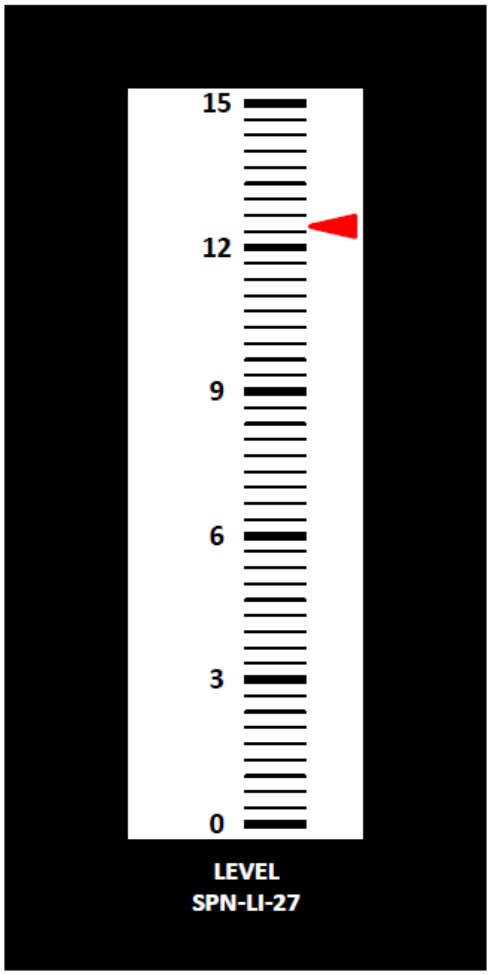

Assuming the unit is in MODE 1, LCO 3.7.9, Ultimate Heat Sink, is NOT MET due to Spray Pond ___(1)___ and the required action for this condition is to ___(2)___ .

A. (1) level
   (2) be in MODE 3 within 6 hours

B. (1) level
(2) restore to OPERABLE within 72 hours

C. (1) temperature
(2) be in MODE 3 within 6 hours

D. (1) temperature
(2) restore to OPERABLE within 72 hours

Answer: A

Explanation:

A. Correct.
B. First part is correct. Second part is plausible since this is the required action for LCO 3.7.8, Essential Spray Pond, and the Safety Function Determination Program states that an inoperable UHS renders LCO 3.7.8 inoperable, however only the actions for LCO 3.7.9 are required to be performed.
C. First part is plausible since there is a low temperature operability limit for the RWT (60°F), however the UHS does not have a low limit on temperature. Additionally, the required level in the Spray Pond for UHS operability is 12 feet, however it is 12 useable feet which requires an indicated level of 13.5 feet since the pump suction is 1.5 feet from the bottom of the tank. Second part is correct.
D. First part is plausible since there is a low temperature operability limit for the RWT (60°F), however the UHS does not have a low limit on temperature. Additionally, the required level in the Spray Pond for UHS operability is 12 feet, however it is 12 useable feet which requires an indicated level of 13.5 feet since the pump suction is 1.5 feet from the bottom of the tank. Second part is plausible since this is the required action for LCO 3.7.8, Essential Spray Pond, and the Safety Function Determination Program states that an inoperable UHS renders LCO 3.7.8 inoperable, however only the actions for LCO 3.7.9 are required to be performed.

Question Source:		**Bank**	
		Modified Bank	
	x	**New**	
		Previous NRC Exam	

Question Cognitive Level:		**Memory or Fundamental Knowledge**
	x	**Comprehension or Analysis**
	3	**Level of Difficulty**

10 CFR Part 55 Content:	**43.2**

Reference Provided:	**None**

Learning Objective:	Apply the action statements that are greater than one hour for TS 3.7

SRO Justification:

Figure 2-1 Screening for SRO-Only Linked to 10 CFR 55.43(b)(2) (Technical Specifications)

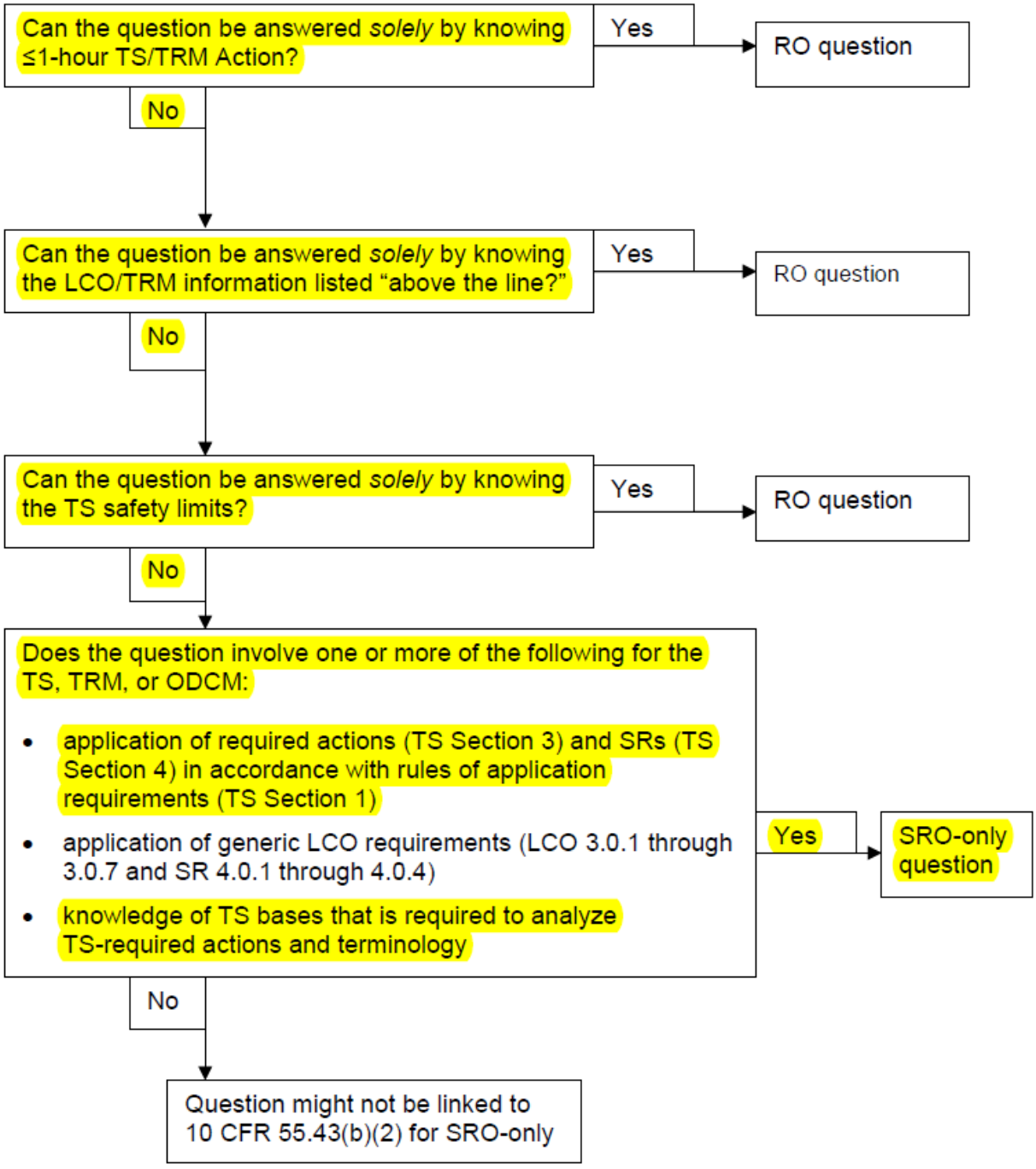

Technical Reference: Technical Specifications

3.7 PLANT SYSTEMS

3.7.9 Ultimate Heat Sink (UHS)

LCO 3.7.9 The UHS shall be OPERABLE.

APPLICABILITY: MODES 1, 2, 3, and 4.

ACTIONS

CONDITION	REQUIRED ACTION	COMPLETION TIME
A. UHS inoperable.	A.1 Be in MODE 3.	6 hours
	AND	
	A.2 Be in MODE 5.	36 hours

SURVEILLANCE REQUIREMENTS

SURVEILLANCE		FREQUENCY
SR 3.7.9.1	Verify the usable water depth of each essential spray pond is ≥ 12 feet.	In accordance with the Surveillance Frequency Control Program
SR 3.7.9.2	Verify water temperature of each essential spray pond is ≤ 89°F.	In accordance with the Surveillance Frequency Control Program

Technical Reference: Technical Specifications

3.7 PLANT SYSTEMS

3.7.8 Essential Spray Pond System (ESPS)

LCO 3.7.8 Two ESPS trains shall be OPERABLE.

APPLICABILITY: MODES 1, 2, 3, and 4.

ACTIONS

CONDITION	REQUIRED ACTION	COMPLETION TIME
A. One ESPS train inoperable.	A.1 --------Notes-------- 1. Enter applicable Conditions and Required Actions of LCO 3.8.1, "AC Sources — Operating," for emergency diesel generator made inoperable by ESPS. 2. Enter applicable Conditions and Required Actions of LCO 3.4.6, "RCS Loops — MODE 4," for shutdown cooling made inoperable by ESPS. ---------- Restore ESPS train to OPERABLE status.	72 hours

Technical Reference: Technical Specifications Bases

BASES

LCO

The UHS is required to be OPERABLE. The UHS is considered OPERABLE if it contains a sufficient volume of water at or below the maximum temperature that would allow the ESPS to operate for at least 26 days with no makeup following the design basis LOCA without the loss of net positive suction head (NPSH), and without exceeding the maximum design temperature of the equipment served by the ESPS. To meet this condition, the UHS temperature should not exceed 89°F and the level of each ESP should not fall below 12 ft usable water depth during normal unit operation. Since the bottom 1.5 ft of the ESPS is required to meet pump submergence requirements, an actual depth of 13.5 ft is needed to meet the 26 day requirement for inventory purposes.

The 12' is the water volume that would be depleted over 26 days following a design basis LOCA if no makeup were available. The thermal performance analysis utilizes the entire volume inventory of the pond(s) since the entire volume is always available as a heat sink.

Examination Outline Cross-reference:	Level	RO		SRO
	Tier #			2
	Group #			1
	K/A #	103 A2.03		
	Importance Rating			3.8
K/A: Containment: Ability to (a) predict the impacts of the following malfunctions or operations on the containment system and (b) based on those predictions, use procedures to correct, control, or mitigate the consequences of those malfunctions or operations: Phase A and B isolation				

Question 90

Given the following conditions:

- Unit 1 tripped from 100% power due to an ESD inside Containment
- On the trip, NBN-X03 'A' ESF Transformer tripped on ground fault lockout
- The 'A' EDG tripped on Low Lube Oil immediately after starting
- Containment Pressure is 12 psig and rising
- The 'B' LPSI Pump is tagged out for corrective maintenance
- The 'B' CS Pump tripped on overcurrent immediately after starting
- NCB-UV-401, NCW CNTMT UPSTREAM SPLY ISOL VLV, is closed
- NCA-UV-402, NCW CNTMT DOWNSTREAM RETURN ISOL VLV, is open
- NCB-UV-403, NCW CNTMT UPSTREAM RETURN ISOL VLV, is closed

Based on these conditions, the CRS should enter 40EP-9EO09, Functional Recovery, and jeopardize…

NOTE:

MVAC-1 is Offsite Power
CI-1 is Auto/Man CTMT Isolation
CTPC-2 is CS

A. MVAC-1 and CI-1 ONLY

B. CI-1 and CTPC-2 ONLY

C. MVAC-1 and CTPC-2 ONLY

D. MVAC-1, CI-1, and CTPC-2

Answer: C

Explanation:

A. MVAC-1 is correct and CI-1 is plausible since NCA-UV-402 is a containment Isolation Valve, but as long as NCB-UV-403 is closed, CI-1 is met. Its plausible that CTPC-2 would not be jeopardized since one CS Pump is available and the 'B' LPSI Pump is available, however there is no power available to that pump due to the EDG trip.
B. CTPC-2 is correct and CI-1 is plausible since NCA-UV-402 is a containment Isolation Valve, but as long as NCB-UV-403 is closed, CI-1 is met. It's plausible that MVAC-1 would not be jeopardized since the 'B' Class bus is energized, however, the 'A' Class bus needs to be energized in order to energize CS Pump 'A'.
C. Correct.
D. MVAC-1 and CTPC-2 are both correct, and CI-1 is plausible since NCA-UV-402 is a Containment Isolation Valve, but as long as NCB-UV-403 is closed, CI-1 is met.

Question Source:		**Bank**	
		Modified Bank	
	x	**New**	
		Previous NRC Exam	

Question Cognitive Level:		**Memory or Fundamental Knowledge**
	x	**Comprehension or Analysis**
	3	**Level of Difficulty**

10 CFR Part 55 Content:	**43.5**

Reference Provided:	**None**

Learning Objective:	Determine whether or not a specific selected success path is jeopardized or challenged and how that information will be used

SRO Justification:

Figure 2-2 Screening for SRO-Only Linked to 10 CFR 55.43(b)(5) (Assessment and Selection of Procedures)

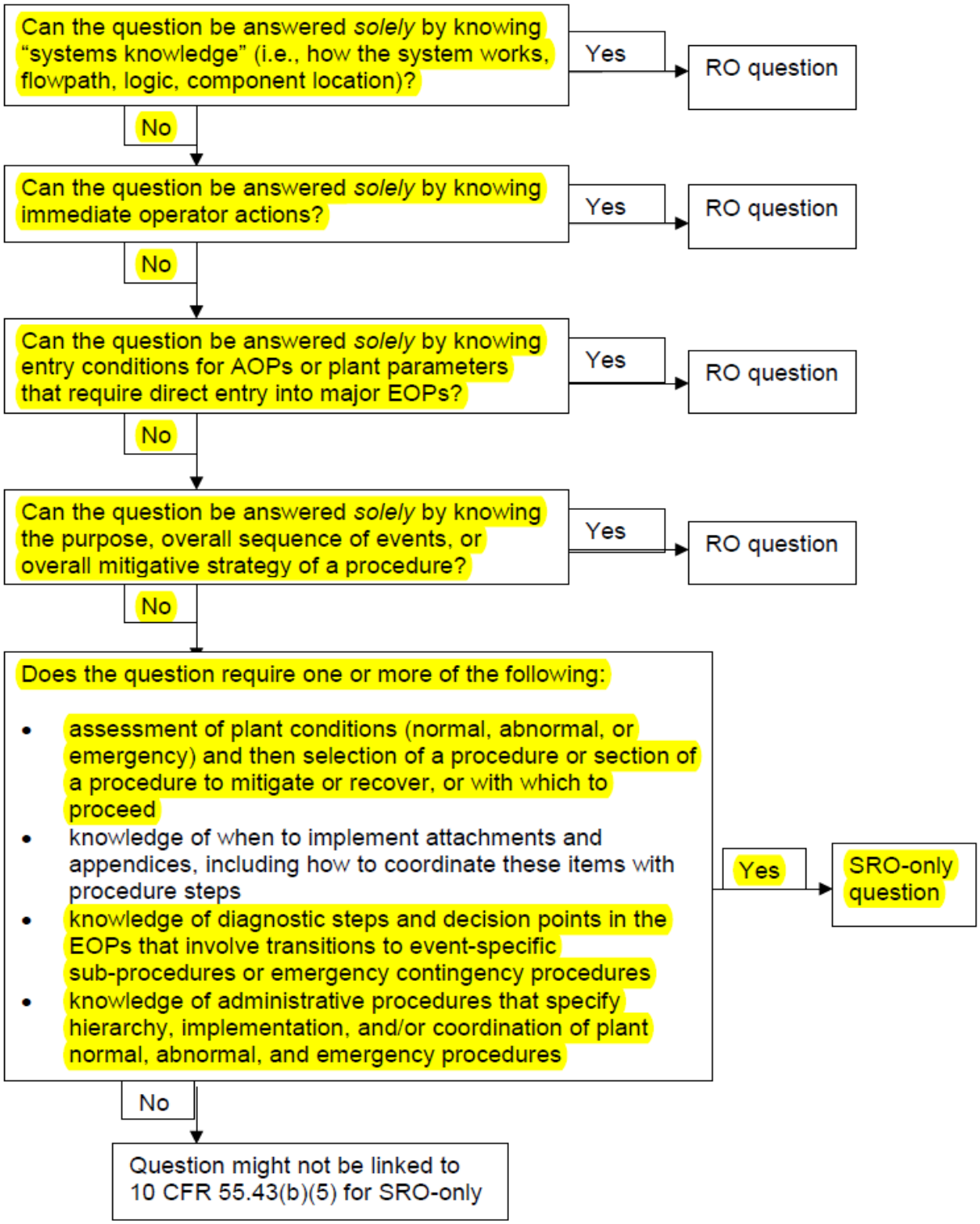

Technical Reference: 40EP-9EO09, Functional Recovery

Since the startup transformer is available on Train 'B' and the 'A' CS Pump is available, MVAC-1 should be jeopardized, and the crew should cross-tie Train 'B' power to Train 'A' bus to start the 'A' CS Pump.

MVAC-1; Offsite Power

a. At least one vital 4.16 kV AC bus energized from the Startup Transformer.

b. No jeopardized safety functions require restoration of electrical power to a vital AC bus.

Technical Reference: 40DP-9AP14, Functional Recovery Technical Guideline

Once the Functional Recovery procedure has been entered, the operator will use the Safety Function Tracking page and the Resource Assessment Trees (RATs) to determine the acceptance criteria and the equipment needed to satisfy each safety function. The operator must determine whether each safety function is jeopardized (acceptance criteria not met), challenged (acceptance criteria met but action must be taken to ensure that the criteria continue to be met) or satisfied in order to set the priorities for performance of the procedure.

Technical Reference: 40EP-9EO09, Functional Recovery

CI-1 Condition 1 is not met due to containment pressure > 3 psig

CI-1; Auto/Man CTMT Isolation **CRITERIA SATISFIED**

---------- **NOTE** ----------

Meeting the provisions of Condition 1 or Condition 2 will satisfy CI-1, Auto/Man CTMT Isolation.

Condition 1

a. **IF** high steam plant activity or alarms exist, **THEN** all release paths from the most affected Steam Generator to the environment are isolated. ☐ ☐ ☐ ☐

b. Containment pressure is less than 3 psig. ☐ ☐ ☐ ☐

c. No valid containment area radiation monitor alarms or unexplained rise in activity. ☐ ☐ ☐ ☐

d. **IF** there is RCS leakage into the Nuclear Cooling Water system, **THEN** all affected Nuclear Cooling Water system containment penetrations are isolated. ☐ ☐ ☐ ☐

e. **IF** a SGTR exists, **THEN** the isolated SG pressure is less than 1135 psia [1110 psia] and stable or lowering. ☐ ☐ ☐ ☐

(continue)

Technical Reference: 40EP-9EO09, Functional Recovery

Since either meeting CI-1 condition 1 or condition 2 results in satisfying CI-1, and there is at least one CIV closed in each containment penetration, CI-1 should NOT be jeopardized.

CI-1; Auto/Man CTMT Isolation **CRITERIA SATISFIED**

---------- **NOTE** ----------

Meeting the provisions of Condition 1 or Condition 2 will satisfy CI-1, Auto/Man CTMT Isolation.

Condition 2

a. **IF** high steam plant activity or valid alarms exist, **THEN** all release paths from the most affected Steam Generator to the environment are isolated. ☐ ☐ ☐ ☐

b. Each containment penetration required to be closed for current plant conditions has an isolation valve closed. ☐ ☐ ☐ ☐

Technical Reference: 40EP-9EO09, Functional Recovery

CTPC-2 is jeopardized since power is not available to either the 'A' CS Pump or the 'A' LPSI Pump, either of which could be used to satisfy CTPC-2. CTPC-2 will be jeopardized until MVAC-1 is completed and power is available to these pumps.

CTPC-2; CS	**CRITERIA SATISFIED**			
a. At least one Containment Spray header flow is 4350 gpm or more. **OR** LPSI is cross-connected to CS.	☐	☐	☐	☐
b. Containment pressure is less than 55 psig.	☐	☐	☐	☐
c. Hydrogen concentration is less than 4.9%. **OR** TSC has been notified.	☐	☐	☐	☐

Examination Outline Cross-reference:	Level	RO		SRO
	Tier #			2
	Group #			2
	K/A #	027 G 2.4.21		
	Importance Rating			4.6
K/A: Containment Iodine Removal: Knowledge of the parameters and logic used to assess the status of safety functions, such as reactivity control, core cooling and heat removal, reactor coolant system integrity, containment conditions, radioactivity release control, etc.				

Question 91

Given the following conditions following a large break LOCA inside Containment:

- Containment Temperature is 210°F and slowly lowering
- Containment Pressure is 14 psig and slowly lowering
- Hydrogen concentration is 1.4% and slowly rising

(1) Per 40EP-9EO03, Loss of Coolant Accident, what is the MINIMUM INDICATED Containment Spray header flow required to meet the CTPC safety function?

(2) A dose equivalent I-131 level of 350 µCi/gm inside the Containment atmosphere would constitute a LOSS of the…

A. (1) 3500 gpm
(2) Containment Barrier

B. (1) 3500 gpm
(2) Fuel Cladding Barrier

C. (1) 4350 gpm
(2) Containment Barrier

D. (1) 4350 gpm
(2) Fuel Cladding Barrier

Answer: D

Explanation:

A. First part is plausible since the UFSAR requires 3500 gpm of CS flow to meet the CTPC safety function, however due to instrument uncertainties, the EOP network requires a minimum indicated flow of 4350 gpm. Second part is plausible since high hydrogen concentration will affect the Containment Barrier, however iodine impacts the Fuel Cladding Barrier.
B. First part is plausible since the UFSAR requires 3500 gpm of CS flow to meet the CTPC safety function, however due to instrument uncertainties, the EOP network requires a minimum indicated flow of 4350 gpm. Second part is correct.
C. First part is correct. Second part is plausible since high hydrogen concentration will affect the Containment Barrier, however iodine impacts the Fuel Cladding Barrier.
D. Correct.

Question Source:		**Bank**	
		Modified Bank	
	x	**New**	
		Previous NRC Exam	

Question Cognitive Level:	**x**	**Memory or Fundamental Knowledge**
		Comprehension or Analysis
	3	**Level of Difficulty**

10 CFR Part 55 Content:	**43.4**

Reference Provided:	**None**

Learning Objective:	Use the EAL tables and basis document to determine the emergency plan classification

SRO Justfication:
D. Radiation Hazards That May Arise during Normal and Abnormal Situations, including Maintenance Activities and Various Contamination Conditions [10 CFR 55.43(b)(4)] Some examples of SRO exam items for this topic include the following: • process for gaseous/liquid release approvals (i.e., release permits) • analysis and interpretation of radiation and activity readings as they pertain to the selection of administrative, normal, abnormal, and emergency procedures • analysis and interpretation of coolant activity, including comparison to emergency plan criteria and/or regulatory limits SRO-only knowledge should not be claimed for questions that can be answered *solely* based on RO knowledge of radiological safety principles (e.g., radiation work permit requirements, stay time, and DAC hours).

Technical Reference: EOP Setpoint Document

By: K. Geiszler Reviewer: R. Hicks	Subject: Emergency Operating Procedures (EOP) Setpoint Document	TA-13-C00-2000-001 Revision 09 Page 161 of 249

6.18 Containment Spray Flow

6.18.1 4350 gpm -- Total Containment Spray Header Flow

VALUE:

- ≥ 4350 gpm total CS flow delivered to spray headers

CEN SETPOINT ID:

- (S06) CS pump design flow rate

MONITORING INSTRUMENTATION:

- J-SIA-FI-0338; J-SIB-FI-0348
- ERFDADS

CATEGORY AND USE CODES:

- C03 -- These instrument applications are not nuclear safety significant or are located outside of design bases space. Instrument uncertainties need not be considered.
  - U69 -- To verify a parameter is in agreement with "nominal values" provided in SSC design criteria or safety analyses.

BASES:

- The intent of this EOP setpoint is to provide operators with criteria for verification that adequate containment spray flow exists after CS system actuation, and to prompt operators to investigate possible causes of degraded system flow if it is below the expected value.

CALCULATION AND RESULTS:

- PVNGS UFSAR Table 6.2.1-7, "Engineered Safety Systems Operating Assumptions for Containment Peak Pressure Analysis," states that the CS flow assumed to be delivered to the spray headers in the accident analysis is 3,500 gpm for one CS pump in the injection mode and the recirculation mode.
- Calculation 13-JC-SI-0215, Tables 2-3 states that, for an actual flow of 3,500 gpm, The required minimum indicated flow is 4,350 gpm.

REFERENCES:

- UFSAR, "Updated Final Safety Analysis Report (UFSAR)", Revision 17C. (April 2015)
- Calculation 13-JC-SI-0215, "Containment Spray Pump Train A and B Discharge Flow Indication Loops (SIA-F-338 & SIB-F-348) Uncertainty Calculation," Revision 18. (EDC 2013-00636)

Technical Reference: 40EP-9EO03, Loss of Coolant Accident

SAFETY FUNCTION:

8. Containment Temperature and Pressure Control

---------- **NOTE** ----------

Meeting the provisions of Condition 1 or Condition 2 will satisfy the Containment Temperature and Pressure Control Safety Function.

---------- **NOTE** ----------

Hydrogen criterion may be omitted until hydrogen monitor is in service.

ACCEPTANCE CRITERIA:	**CRITERIA SATISFIED**			
Condition 1				
a. Containment temperature is less than 235°F.	☐	☐	☐	☐
b. Containment pressure is less than 8.5 psig.	☐	☐	☐	☐
c. Hydrogen concentration is less than 1.1%.	☐	☐	☐	☐
Condition 2				
a. At least one Containment Spray header flow is greater than 4350 gpm.	☐	☐	☐	☐
b. Containment pressure is less than 55 psig.	☐	☐	☐	☐
c. Hydrogen concentration is less than 4.9%.	☐	☐	☐	☐

Technical Reference: EAL Hot Chart

Fuel Clad (FC) Barrier	
Loss	**Potential Loss**
	1. RVLMS < 21% plenum (Detector #8)
1. Rep CETs > 1200°F	1. Rep CETs > 700°F 2. RCS heat removal cannot be established **AND** RCS subcooling < 24°F
1. Containment radiation RU-148 > 2.1E+05 mR/hr **OR** RU-149 > 2.4E+05 mR/hr 2. Dose equivalent I-131 coolant activity > 300 µCi/gm	

Technical Reference: EAL Hot Chart

Containment (CTMT) Barrier	
Loss	**Potential Loss**
1. A leaking or RUPTURED SG is FAULTED outside of containment	
	1. Rep CETs > 1200°F **AND** Functional recovery procedure **not** effective within 15 min. (Note 1)
	1. Containment radiation RU-148 > 6.8E+06 mR/hr **OR** RU-149 > 7.8E+06 mR/hr
1. Containment isolation is required **AND EITHER:** • Containment integrity has been lost based on Emergency Coordinator judgment • UNISOLABLE pathway from Containment to the environment exists 2. Indications of RCS leakage outside of Containment	1. Containment pressure > 60 psig 2. Containment hydrogen concentration ≥ 4.9% 3. Containment pressure > 8.5 psig with < 4350 gpm Containment Spray flow for ≥ 15 min. (Note 1)

Examination Outline Cross-reference:	Level	RO		SRO
	Tier #			2
	Group #			2
	K/A #	015 G 2.4.18		
	Importance Rating			4.0
K/A: Nuclear Instrumentation: Knowledge of the specific bases for EOPs				

Question 92

Following a Reactor trip, Boron Dilution Alarm System (BDAS) must be placed in service per Standard Appendix 8, BDAS Channel Check, within a MAXIMUM of ___(1)___ of power lowering to 2 x 10^{-6}%.

Per the Technical Specification Bases for LCO 3.3.12, BDAS, in MODES 3 - 5, a BDAS alarm will alert the crew a MINIMUM of ___(2)___ prior to criticality.

A. (1) 15 minutes
   (2) 15 minutes

B. (1) 15 minutes
   (2) 30 minutes

C. (1) 60 minutes
   (2) 15 minutes

D. (1) 60 minutes
   (2) 30 minutes

Answer: C

Explanation:

A. First part is plausible since 15 minutes is the allotted time to initiate a boration during a loss of shutdown margin in MODES 3 – 5, however BDAS must be placed in service within 60 minutes of being < 2 x 10^{-6} %. Second part is correct.
B. First part is plausible since 15 minutes is the allotted time to initiate a boration during a loss of shutdown margin in MODES 3 – 5, however BDAS must be placed in service within 60 minutes of being < 2 x 10^{-6} %. Second part is plausible as 30 minutes is correct in MODE 6, however in MODES 3 – 5, the alarm ensures at least 15 minutes are available prior to an inadvertent criticality.
C. Correct.
D. First part is correct. Second part is plausible as 30 minutes is correct in MODE 6, however in MODES 3 – 5, the alarm ensures at least 15 minutes are available prior to an inadvertent criticality.

Question Source:		**Bank**	
		Modified Bank	
	x	**New**	
		Previous NRC Exam	

Question Cognitive Level:	**x**	**Memory or Fundamental Knowledge**
		Comprehension or Analysis
	3	**Level of Difficulty**

10 CFR Part 55 Content:	**43.2**

Reference Provided:	**None**

Learning Objective:	Identify the basis of Tech Spec LCOs for section 3.3

SRO Justification:

Figure 2-1 Screening for SRO-Only Linked to 10 CFR 55.43(b)(2) (Technical Specifications)

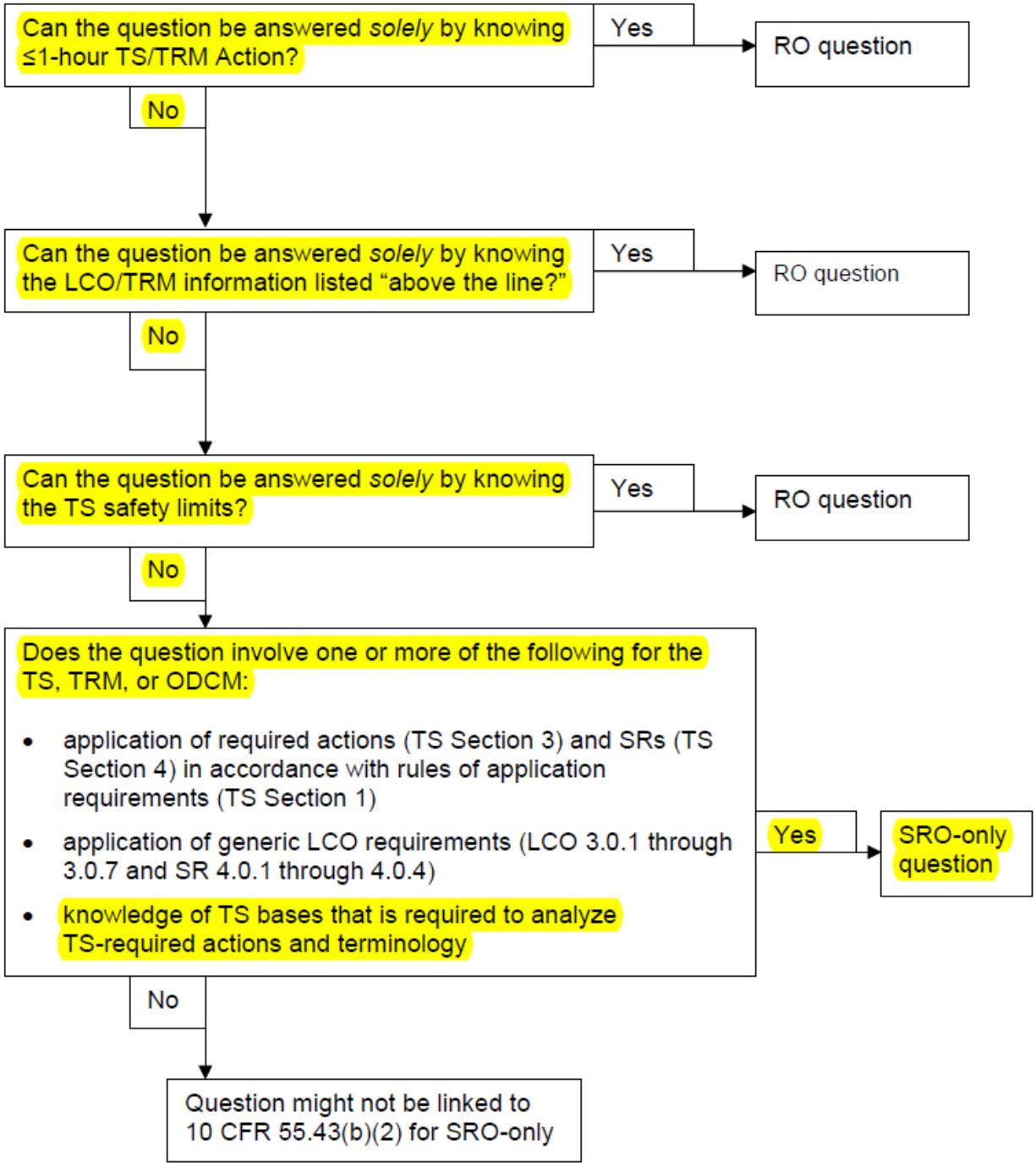

Technical Reference: Technical Specification Bases

B 3.3 INSTRUMENTATION

B 3.3.12 Boron Dilution Alarm System (BDAS)

BASES

BACKGROUND

The Boron Dilution Alarm System (BDAS) alerts the operator of a boron dilution event in MODES 3, 4, 5 and 6. The boron dilution alarm is received at least 15 minutes prior to criticality in Modes 3-5 and at least 30 minutes prior to criticality in Mode 6 to allow the operator to terminate the boron dilution.

In MODES 1 and 2 protection for a boron dilution event is addressed by LCO 3.3.1, "Reactor Protective System (RPS) Instrumentation-Operating." In MODES 3 and 4 with the CEAs withdrawn, LCO 3.3.2, "Reactor Protective System (RPS) Instrumentation-Shutdown," provides protection.

The BDAS utilizes two channels that monitor the startup channel neutron flux indications. If the neutron flux signals increase to the calculated alarm setpoint a control room annunciation is received. The setpoint is automatically lowered to a fixed amount above the current flux level signal. The alarm setpoint will only follow decreasing or constant flux levels, not increasing levels. Two channels of BDAS must be OPERABLE to provide single failure protection and to facilitate detection of channel failure by providing CHANNEL CHECK capability.

Examination Outline Cross-reference:	Level	RO		SRO
	Tier #			2
	Group #			2
	K/A #	071 A2.09		
	Importance Rating			3.5
K/A: Waste Gas Disposal: Ability to (a) predict the impacts of the following malfunctions or operations on the Waste Gas Disposal System; and (b) based on those predictions, use procedures to correct, control, or mitigate the consequences of those malfunctions or operations: Stuck-open relief valve				

Question 93

Given the following conditions:

- The Waste Gas Surge Tank relief valve has lifted and is stuck-open, releasing its contents
- The SM has declared a SITE AREA EMERGENCY due to the release

(1) Prior to exiting through the plant vent, the radiological release should be detected by…

(2) Per the PVNGS Emergency Plan, the Emergency Coordinator shall direct all non-essential site personnel to…

A. (1) Gaseous Radwaste Radiation Monitor, RU-12
(2) shelter in place

B. (1) Gaseous Radwaste Radiation Monitor, RU-12
(2) evacuate the site

C. (1) Radwaste Building Ventilation Exhaust Filter Inlet Monitor, RU-14
(2) shelter in place

D. (1) Radwaste Building Ventilation Exhaust Filter Inlet Monitor, RU-14
(2) evacuate the site

Answer: D

Explanation:

A. First part is plausible since RU-12 monitors the discharge header of the Waste Gas Decay Tanks during planned releases. Second part is plausible since the release is through the plant vent stack and personnel could be exposed while evacuating the site, however for an SAE, site evacuation of non-essential personnel is required. Additionally, since PARs are only required during General Emergencies, it is plausible to believe that site evacuation would only be required during a GE. It is also allowable for the EC to delay or make special requirements on the evacuation of site personnel, however evacuation of non-essential personnel is a requirement at the SAE level.
B. First part is plausible since RU-12 monitors the discharge header of the Waste Gas Decay Tanks during planned releases. Second part is correct.
C. First part is correct. Second part is plausible since the release is through the plant vent stack and personnel could be exposed while evacuating the site, however for an SAE, site evacuation of non-essential personnel is required. Additionally, since PARs are only required during General Emergencies, it is plausible to believe that site evacuation would only be required during a GE. It is also allowable for the EC to delay or make special requirements on the evacuation of site personnel, however evacuation of non-essential personnel is a requirement at the SAE level.
D. Correct.

Question Source:		**Bank**	
		Modified Bank	
	x	**New**	
		Previous NRC Exam	

Question Cognitive Level:		**Memory or Fundamental Knowledge**
	x	**Comprehension or Analysis**
	3	**Level of Difficulty**

10 CFR Part 55 Content:	**43.4**

Reference Provided:	**None**

Learning Objective:	Describe the flowpaths of the Aux Building HVAC system

SRO Justfication:
D. Radiation Hazards That May Arise during Normal and Abnormal Situations, including Maintenance Activities and Various Contamination Conditions [10 CFR 55.43(b)(4)] Some examples of SRO exam items for this topic include the following: • process for gaseous/liquid release approvals (i.e., release permits) • analysis and interpretation of radiation and activity readings as they pertain to the selection of administrative, normal, abnormal, and emergency procedures • analysis and interpretation of coolant activity, including comparison to emergency plan criteria and/or regulatory limits SRO-only knowledge should not be claimed for questions that can be answered *solely* based on RO knowledge of radiological safety principles (e.g., radiation work permit requirements, stay time, and DAC hours).

Technical Reference: Gaseous Radwaste Tech Manual

RU-12 is in the top right hand side of the drawing and monitors the normal discharge path. The surge tank (bottom left), relieves to the radwaste exhaust system which is monitored by RU-14.

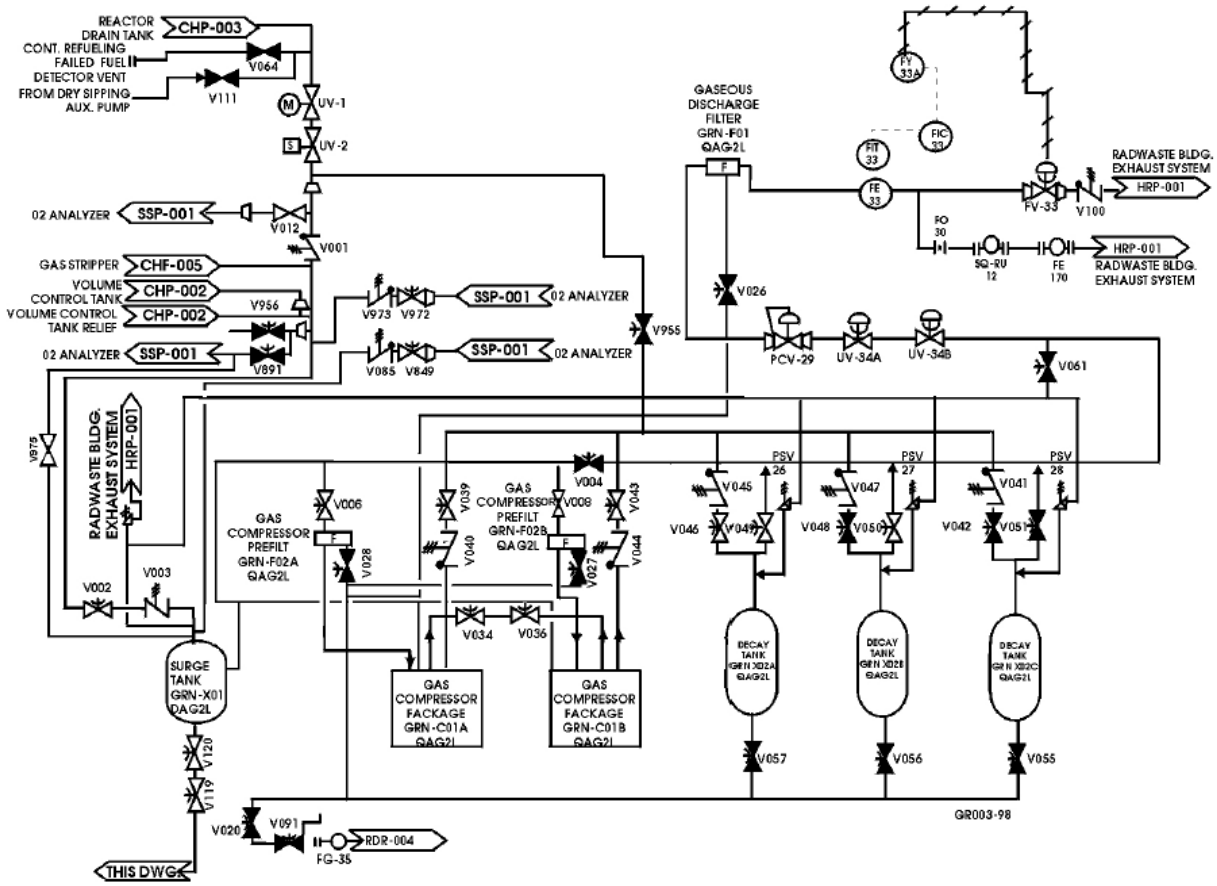

Technical Reference: PVNGS Emergency Plan

are deployed to search for and assist the missing personnel.

6.7.1.5 Evacuation

The decision to evacuate non-essential personnel is made by the EC. Non-essential personnel must be evacuated in the event of a Site Area Emergency or General Emergency. However, in certain situations it may be desirable to evacuate earlier to enhance worker protection.

Technical Reference: EP-0905, Protective Actions

The EC has some latitude in determining evacuation of site personnel, therefore it is plausible to shelter in place instead of evacuate, however in a SAE, non-essential personnel are required to be evacuated.

- Shelter in Place: If Protective Action Guidelines are expected to be exceeded, shelter in place in lieu of evacuation is appropriate when impediments to evacuation exist or when evacuation may take longer than the expected release duration.
- Use of Potassium Iodide (KI) for the General Public or Emergency Workers: The recommendations to the State are based on Thyroid CDE estimates in the environment.

3.1.8 Consideration should be given to plant and radiological conditions as they relate to the emergency prior to ordering an assembly, evacuation or activation of the emergency response facilities.

3.1.9 As conditions warrant, the Emergency Coordinator may delay, postpone, or make special requirements on the evacuation and/or ERF activation. Some examples of special circumstances and considerations are, as follows:

- Adverse Radiological Conditions
- On-site hazards (toxic gas, fires, or explosions)
- Ongoing Security Event (hostile attack, airborne threat, etc.)
- Supplemental Plant Support to put the plant in a safer configuration (i.e., equipment hatch open, primary system open for repair, etc.)
- Other similar events as deemed appropriate by the Emergency Coordinator.

Technical Reference: EP-0905, Protective Actions

3.1.12 Evacuation decision of non-essential personnel is made by the Emergency Coordinator. Non-essential personnel must be evacuated in the event of a Site Area Emergency or General Emergency. However, in certain situations it may be desirable to evacuate earlier to enhance worker protection.

Examination Outline Cross-reference:	Level	RO		SRO
	Tier #			3
	Group #			
	K/A #	G 2.1.4		
	Importance Rating			3.8
K/A: Knowledge of individual licensed operator responsibilities related to shift staffing, such as medical requirements, “no-solo” operation, maintenance of active license status, 10CFR55, etc.				

Question 94

Given the following conditions:

- RCS Temperature is 250°F and stable
- RCS Pressure is 200 psia and stable

Per Technical Specifications section 5.0, Administrative Controls, and 10CFR50.54(m), there must be a MINIMUM of ___(1)___ licensed operators in the Control Room and the Control Room command function can be performed ___(2)___ .

A. (1) one
(2) ONLY by an SRO

B. (1) one
(2) by either an RO or an SRO

C. (1) two
(2) ONLY by an SRO

D. (1) two
(2) by either an RO or an SRO

Answer: C

Explanation:

A. First part is plausible since when in a cold shutdown condition (MODE 5 or 6), only one licensed operator is required to be in the control room, and since the unit would be on Shutdown Cooling at 250°F, it is plausible to think that the unit is in a cold shutdown condition, however MODE 5 is not until RCS temp is < 210°F. Second part is correct.
B. First part is plausible since when in a cold shutdown condition (MODE 5 or 6), only one licensed operator is required to be in the control room, and since the unit would be on Shutdown Cooling at 250°F, it is plausible to think that the unit is in a cold shutdown condition, however MODE 5 is not until RCS temp is < 210°F. Second part is plausible since in MODES 5 or 6, either an RO or an SRO can hold the command function, however in MODE 4, only an SRO may have the command function in the control room.
C. Correct.
D. First part is correct. Second part is plausible since in MODES 5 or 6, either an RO or an SRO can hold the command function, however in MODE 4, only an SRO may have the command function in the control room.

Question Source:		**Bank**	
		Modified Bank	
	x	**New**	
		Previous NRC Exam	

Question Cognitive Level:		**Memory or Fundamental Knowledge**
	x	**Comprehension or Analysis**
	3	**Level of Difficulty**

10 CFR Part 55 Content:	**43.1**

Reference Provided:	**None**

Learning Objective:	State the legal requirements of the Tech Specs and their bases

SRO Justfication:

A. Conditions and Limitations in the Facility License [10 CFR 55.43(b)(1)]

Examples of SRO exam items for this topic include the following:

- reporting requirements when the maximum licensed thermal power output is exceeded
- administration of fire protection program requirements, such as compensatory actions associated with inoperable sprinkler systems and fire doors
- required actios for not meeting administrative controls listed in Technical Specifications (TS) Section 5 or 6, depending on the facility (e.g., shift staffing requirements)
- National Pollutant Discharge Elimination System requirements, if applicable
- processes for TS and final safety analysis report changes

Note: The analysis and selection of required actions for TS Sections 3 and 4 may be more appropriately listed in the following 10 CFR 55.43 topic.

Technical Reference: Technical Specifications

5.0 ADMINISTRATIVE CONTROLS

5.1 Responsibility

5.1.1 The Department Leader, Operations shall be responsible for overall unit operation and shall delegate in writing the succession to this responsibility during his absence.

The Department Leader, Operations or his designee shall approve, prior to implementation, each proposed test, experiment or modification to systems or equipment that affect nuclear safety.

5.1.2 The Control Room Supervisor (CRS) shall be responsible for the control room command function. During any absence of the CRS from the control room while the unit is in MODE 1, 2, 3, or 4, an individual with an active Senior Reactor Operator (SRO) license shall be designated to assume the control room command function. During any absence of the CRS from the control room while the unit is in MODE 5 or 6, an individual with an active SRO license or Reactor Operator license shall be designated to assume the control room command function.

Technical Reference: 10CFR50.54(m)

In part (iii), it states that when in MODES 1-4, a senior operator must be present at the controls at all times.

Since this is not required in other MODES (5, 6, defueled), the statement, “In addition to this senior operator” means in addition to the zero required senior operators, therefore only one licensed operator is required to be at the controls when not in MODES 1-4.

(ii) Each licensee shall have at its site a person holding a senior operator license for all fueled units at the site who is assigned responsibility for overall plant operation at all times there is fuel in any unit. If a single senior operator does not hold a senior operator license on all fueled units at the site, then the licensee must have at the site two or more senior operators, who in combination are licensed as senior operators on all fueled units.

(iii) When a nuclear power unit is in an operational mode other than cold shutdown or refueling, as defined by the unit's technical specifications, each licensee shall have a person holding a senior operator license for the nuclear power unit in the control room at all times. In addition to this senior operator, for each fueled nuclear power unit, a licensed operator or senior operator shall be present at the controls at all times.

(iv) Each licensee shall have present, during alteration of the core of a nuclear power unit (including fuel loading or transfer), a person holding a senior operator license or a senior operator license limited to fuel handling to directly supervise the activity and, during this time, the licensee shall not assign other duties to this person.

Technical Reference: Technical Specifications

Table 1.1-1 (page 1 of 1)
MODES

MODE	TITLE	REACTIVITY CONDITION (k_{eff})	% RATED THERMAL POWER[a]	COLD LEG TEMPERATURE (°F)
1	Power Operation	≥ 0.99	> 5	NA
2	Startup	≥ 0.99	≤ 5	NA
3	Hot Standby	< 0.99	NA	≥ 350
4	Hot Shutdown[b]	< 0.99	NA	350 > T_{cold} > 210
5	Cold Shutdown[b]	< 0.99	NA	≤ 210
6	Refueling[c]	NA	NA	NA

Examination Outline Cross-reference:	Level	RO		SRO
	Tier #			3
	Group #			
	K/A #	G 2.1.37		
	Importance Rating			4.6
K/A: Knowledge of procedures, guidelines, or limitations associated with reactivity management				

Question 95

(1) Per 40DP-9OP02, Conduct of Operations, the role of Reactivity Manager may be filled…

(2) The Reactivity Manager _____ allowed to perform peer checks during reactivity manipulations.

A. (1) ONLY by an active SRO license holder
(2) IS

B. (1) ONLY by an active SRO license holder
(2) is NOT

C. (1) by EITHER an active or inactive SRO license holder
(2) IS

D. (1) by EITHER an active or inactive SRO license holder
(2) is NOT

Answer: B

Explanation:

A. First part is correct. Second part is plausible since all licensed operators are allowed to perform peer checks and the Reactivity Manager is responsible for ensuring all reactivity manipulations are peer checked, however when in the role of Reactivity Manager, the Reactivity Manager cannot provide peer checks of reactivity manipulations.
B. Correct.
C. First part is plausible since several senior Operations Managers are inactive SRO license holders and it would be reasonable to believe they could fill the role of Reactivity Manager, however only an active SRO license holder may fulfill the role of Reactivity Manager. Second part is plausible since all licensed operators are allowed to perform peer checks and the Reactivity Manager is responsible for ensuring all reactivity manipulations are peer checked, however when in the role of Reactivity Manager, the Reactivity Manager cannot provide peer checks of reactivity manipulations.
D. First part is plausible since several senior Operations Managers are inactive SRO license holders and it would be reasonable to believe they could fill the role of Reactivity Manager, however only an active SRO license holder may fulfill the role of Reactivity Manager. Second part is correct.

Question Source:		**Bank**	
		Modified Bank	
	x	**New**	
		Previous NRC Exam	

Question Cognitive Level:	**x**	**Memory or Fundamental Knowledge**
		Comprehension or Analysis
	2	**Level of Difficulty**

10 CFR Part 55 Content:	**43.6**

Reference Provided:	**None**

Learning Objective:	Describe the Reactivity Management requirements

SRO Justfication:

Since the question is asking about job requirements which are ONLY allowed to be performed by an SRO (question is asking if SRO or SM – both of which require an SRO license), we believe this is a clear link the SRO job function, even though PV does not have a specific task which explicitly states it.

ES-401N	9	Attachment 2

F. Procedures and Limitations Involved in Initial Core Loading, Alterations in Core Configuration, Control Rod Programming, and Determination of Various Internal and External Effects on Core Reactivity [10 CFR 55.43(b)(6)]

Some examples of SRO exam items for this topic include the following:

- evaluation of core conditions and emergency classifications based on core conditions
- administrative requirements associated with low-power physics testing processes
- administrative requirements associated with refueling activities, such as approvals required to amend core loading sheets or administrative controls of potential dilution paths and/or activities

Technical Reference: 40DP-9OP02, Conduct of Operations

4.9.3 Reactivity Oversight

4.9.3.1 A Reactivity Manager (designated SRO other than the CRS) provides oversight of planned reactivity evolutions as delegated by the SM or CRS. The CRS remains in command and control and receives updates on the status of the reactivity evolution in progress.

4.9.3.2 The SM may assign any active licensed SRO as Reactivity Manager (SRO, other than the CRS or STA, with cognizance of all reactivity manipulations) to the Control Room. The duties of the Reactivity Manager include:

- Prior to the evolution, discussing the reactivity plan with the CRS to obtain CRS concurrence. This discussion includes items such as expected CEA movement with associated ASI control, boration or dilution volumes and rates, amount of turbine load changes with the expected results etc.
- Monitoring all reactivity manipulations and the complete reactivity feedback from the reactor using diverse indications. Communication with the operator includes the expected results of each reactivity manipulation.
- Ensuring the reactor is placed in a safe condition if unexpected indications or conditions are encountered.
- Ensuring peer checks of all calculations and reactivity manipulations are performed (Reactivity Manager does not provide peer checks).

Technical Reference: 40DP-9OP02, Conduct of Operations

4.7.7.5 It is important for individuals in a supervisory oversight role (SM, CRS, and the Reactivity Manager) to remain in those roles. Both internal and external operating experience has shown that when individuals in an oversight role are involved in the evolution, such as peer checking, then the oversight function is diminished or lost altogether. As such, the SM, CRS, and Reactivity Manager DO NOT perform peer checks.

Examination Outline Cross-reference:	Level	RO		SRO
	Tier #			3
	Group #			
	K/A #	G 2.2.17		
	Importance Rating			3.8
K/A: Knowledge of the process for managing maintenance activities during power operations, such as risk assessments, work prioritization, and coordination with the transmission system operator				

Question 96

Given the following conditions:

- Unit 1 is in MODE 1
- Emergent maintenance is required which will place Unit 1 in ORANGE Risk Management Action Level

Per 02DP-9RS01, Operational Risk Management, whose approval is required prior to conducting the emergent maintenance?

A. Work Week Manager

B. Work Control Manager

C. Unit Operations Manager

D. Site General Manager

Answer: D

Explanation:

A. Plausible since the Work Week Manager develops risk management actions when entering a planned ORANGE RMAL, however approval of the Site General Manager is required for commencing work requiring orange RMAL.
B. Plausible since the Work Control Manager approves risk management actions when entering a planned ORANGE RMAL and approves all risk assessments required after work schedules have been finalized (i.e. emergent work), however approval of the Site General Manager is required for commencing work requiring orange RMAL.
C. Plausible since the Unit Operations Manager approves work requiring entry into YELLOW RMAL, however approval of the Site General Manager is required for commencing work requiring orange RMAL.
D. Correct.

Question Source:	**x**	**Bank**	
		Modified Bank	
		New	
		Previous NRC Exam	

Question Cognitive Level:	**x**	**Memory or Fundamental Knowledge**
		Comprehension or Analysis
	3	**Level of Difficulty**

10 CFR Part 55 Content:	**43.5**

Reference Provided:	**None**

Learning Objective:	Identify the required actions for Elevated Risk caused by emergent equipment problems

SRO Justification:

Assessing risk for unplanned maintenance is an SRO only job function as defined by the Master Task List

Master Task List

All tasks in (189524) Senior Reactor Operator

Task#	Task	Trained	Retrained	Deselection Reason
1290480202	Review condition report/dispostion requests (CRDR)	●		
1290490202	Perform telephone notification to the NRC	●		
1290510302	Support work initiation	●		
1290190102	Ensure compliance with Tech Specs	●	Yearly	
1290530102	Ensure compliance with the operational and surveillance requirements of the ODCM	●	2 Years	
1290570302	Approve special variances	●		
1290580302	Authorize Permits	●		
1290600302	Ensure performance of operations repetitive tasks	●		
1290620302	Assess risk for performance of unplanned maintenance	●		

SRO Justification:

ES-401N **7** **Attachment 2**

- knowledge of when to implement attachments and appendices, including how to coordinate these items with procedure steps
- knowledge of diagnostic steps and decision points in the emergency operating procedures (EOPs) that involve transitions to event-specific sub-procedures or emergency contingency procedures
- knowledge of administrative procedures that specify hierarchy, implementation, and/or coordination of plant normal, abnormal, and emergency procedures

Technical Reference: 02DP-9RS01, Operational Risk Management

2.1.1 Site General Manager:

2.1.1.1 Responsible for setting Management Expectations for the management of Plant Risk due to maintenance and test activities.

2.1.1.2 Ensures the overall safe testing and operation of the plant as required by the Technical Specifications and as determined necessary to demonstrate operability of plant Systems, Structures, and Components (SSCs) according to approved plant procedures.

2.1.1.3 Management of site plant risk.

2.1.1.4 Approves plant activities involving entries into ORANGE, Risk Management Action Level (RMAL).

Technical Reference: 02DP-9RS01, Operational Risk Management

2.1.3 Unit Operations Manager:

2.1.3.1 Responsible for management and awareness of overall plant risk for Unit.

2.1.3.2 Approves plant activities involving entry into a YELLOW RMAL.

2.1.3.3 Responsible for reviewing Risk Management Action (See definition 3.43) guidelines when entering a planned YELLOW or ORANGE RMAL.

Technical Reference: 02DP-9RS01, Operational Risk Management

2.2.2 Work Week Manager (WWM):

2.2.2.1 Schedules Online activities to manage plant risk.

2.2.2.2 Maintains risk profile from T-10 to T-2.

2.2.2.3 Performs risk assessments of weekly schedules.

2.2.2.4 Approves Scope Change Requests (SCRs) T-10 to T-2 and reviews SCRs after T-2 to assist WCM with risk assessment.

2.2.2.5 Obtains approvals as required by the applicable schedule RMAL.

2.2.2.6 Develops risk management actions when entering a planned ORANGE RMAL.

Technical Reference: 02DP-9RS01, Operational Risk Management

2.2.3 Operations Work Control Manager (WCM):

2.2.3.1 Maintains risk profile beginning at the end of T-2 through T-0.

2.2.3.2 Approves all risk assessments of SCRs after schedule finalization.

2.2.3.3 Generates and maintains the Risk Assessment Software Risk Profile included with the Plan of the Day for scheduled work.

2.2.3.4 Assesses the impact of surveillance and tests on component availability and risk impact using guidance provided in the Routine Test Matrix, as applicable.

2.2.3.5 Assesses the effect of current plant status on existing risk assessments when authorizing performance of a work activity.

2.2.3.6 Reviews risk management actions when entering a planned ORANGE RMAL.

Examination Outline Cross-reference:	Level	RO		SRO
	Tier #			3
	Group #			
	K/A #	G 2.2.39		
	Importance Rating			4.5
K/A: Knowledge of less than or equal to one hour Technical Specification action statements for systems				

Question 97

Given the following conditions:

- A TS required piece of equipment has been declared inoperable
- The applicable required action has a completion time of, “1 hour AND once per 8 hours thereafter”

To comply with the LCO, the required action must first be completed within a MAXIMUM of ___(1)___ of the equipment inoperability, and each subsequent performance of the required action must be completed within a MAXIMUM of ___(2)___ from the previous performance of the required action.

A. (1) 1 hour
(2) 8 hours

B. (1) 1 hour
(2) 10 hours

C. (1) 1 hour and 15 minutes
(2) 8 hours

D. (1) 1 hour and 15 minutes
(2) 10 hours

Answer: B

Explanation:

A. First part is correct. Second part is plausible since there is no allowance for the initial performance of the required action, however the provisions of SR 3.0.2 allow for an extension of 1.25 times the frequency of the required action for all subsequent performances of the required action.
B. Correct.
C. First part is plausible since SR 3.0.2 allows for an extension of 1.25 times the frequency of the required action, however this does not apply to the initial performance of the required action. Second part is plausible since there is no allowance for the initial performance of the required action, however the provisions of SR 3.0.2 allow for an extension of 1.25 times the frequency of the required action for all subsequent performances of the required action.
D. First part is plausible since SR 3.0.2 allows for an extension of 1.25 times the frequency of the required action, however this does not apply to the initial performance of the required action. Second part is correct.

Question Source:		**Bank**	
		Modified Bank	
	x	**New**	
		Previous NRC Exam	

Question Cognitive Level:		**Memory or Fundamental Knowledge**
	x	**Comprehension or Analysis**
	3	**Level of Difficulty**

10 CFR Part 55 Content:	**43.2**

Reference Provided:	**None**

Learning Objective:	Describe the requirements of SR 3.0.2

SRO Justification:

Figure 2-1 Screening for SRO-Only Linked to 10 CFR 55.43(b)(2) (Technical Specifications)

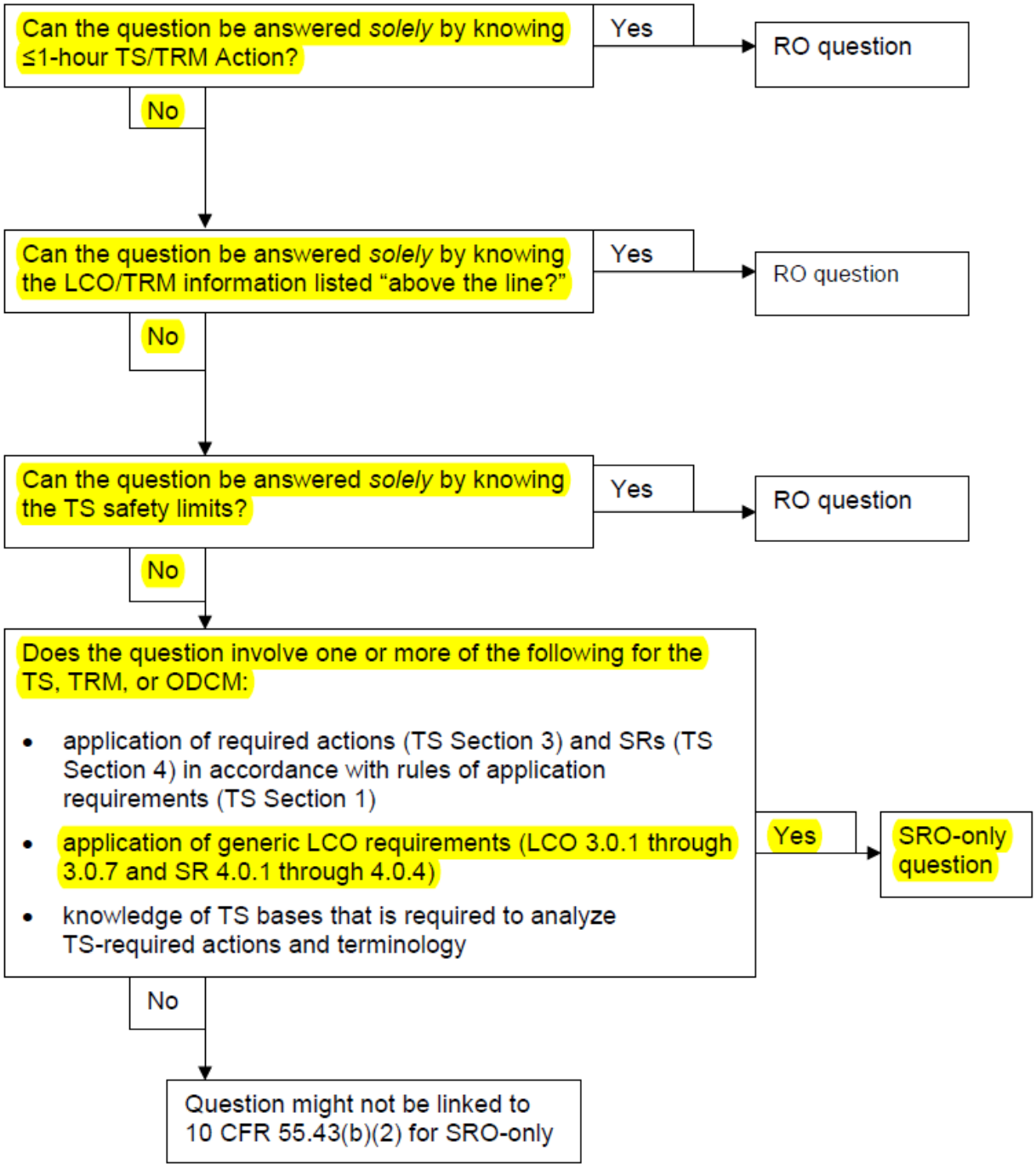

Technical Reference: Technical Specifications

1.3 Completion Times

EXAMPLES (continued)

EXAMPLE 1.3-7

ACTIONS

CONDITION	REQUIRED ACTION	COMPLETION TIME
A. One subsystem inoperable.	A.1 Verify affected subsystem isolated.	1 hour AND Once per 8 hours thereafter
	AND	
	A.2 Restore subsystem to OPERABLE status.	72 hours
B. Required Action and associated Completion Time not met.	B.1 Be in MODE 3.	6 hours
	AND	
	B.2 Be in MODE 5.	36 hours

Required Action A.1 has two Completion Times. The 1 hour Completion Time begins at the time the Condition is entered and each "Once per 8 hours thereafter" interval begins upon performance of Required Action A.1.

If after Condition A is entered, Required Action A.1 is not met within either the initial 1 hour or any subsequent 8 hour interval from the previous performance (plus the extension allowed by SR 3.0.2), Condition B is entered.

Examination Outline Cross-reference:	Level	RO		SRO
	Tier #			3
	Group #			
	K/A #	G 2.3.4		
	Importance Rating			3.7
K/A: Knowledge of radiation exposure limits under normal or emergency conditions				

Question 98

Per EP-0905, Protective Actions, the EPA guidance for life-saving or protection of large populations allows for a MAXIMUM TEDE exposure of ___(1)___ and authorization for this exposure is required to be given by the ___(2)___ .

A. (1) 10 REM
(2) Emergency Coordinator

B. (1) 10 REM
(2) Radiation Protection Coordinator

C. (1) 25 REM
(2) Emergency Coordinator

D. (1) 25 REM
(2) Radiation Protection Coordinator

Answer: C

Explanation:

A. First part is plausible since this is the limit for protection of property, however 25 REM is the limit for live saving efforts. Second part is correct.
B. First part is plausible since this is the limit for protection of property, however 25 REM is the limit for live saving efforts. Second part is plausible since the Radiation Protection Coordinator is the person who authorizes exposures up to 5 REM, however the EC authorizes exposures from 5-25 REM.
C. Correct.
D. First part is correct. Second part is plausible since the Radiation Protection Coordinator is the person who authorizes exposures up to 5 REM, however the EC authorizes exposures from 5-25 REM.

Question Source:		**Bank**	
	x	**Modified Bank**	Modified from 2010 and 2015 SRO Exam
		New	
		Previous NRC Exam	

Question Cognitive Level:	**x**	**Memory or Fundamental Knowledge**
		Comprehension or Analysis
	2	**Level of Difficulty**

10 CFR Part 55 Content:	**43.4**

Reference Provided:	**None**

Learning Objective:	Identify the Emergency Coordinators responsibilities associated with Emergency Exposure

SRO Justification:

D. Radiation Hazards That May Arise during Normal and Abnormal Situations, including Maintenance Activities and Various Contamination Conditions [10 CFR 55.43(b)(4)]

Some examples of SRO exam items for this topic include the following:

- process for gaseous/liquid release approvals (i.e., release permits)
- analysis and interpretation of radiation and activity readings as they pertain to the selection of administrative, normal, abnormal, and emergency procedures
- analysis and interpretation of coolant activity, including comparison to emergency plan criteria and/or regulatory limits

SRO-only knowledge should not be claimed for questions that can be answered *solely* based on RO knowledge of radiological safety principles (e.g., radiation work permit requirements, stay time, and DAC hours).

Original Question (from 2015 NRC SRO Exam):

EXAMINATION ANSWER KEY

2015 SRO

99	ID: Q44181	Points: 1.00

During an Emergency Plan event involving a radiological release, the __(1)__ is responsible for exposure limit authorization up to a **MAXIMUM** of __(2)__ in order to "protect valuable property" of the station.

A. (1) Emergency Coordinator
(2) 10 REM TEDE per event

B. (1) Emergency Coordinator
(2) 25 REM TEDE per event

C. (1) Emergency Operations Director
(2) 10 REM TEDE per event

D. (1) Emergency Operations Director
(2) 25 REM TEDE per event

Answer: A

Technical Reference: EP-0905, Protective Actions

PROTECTIVE ACTIONS	EP-0905	Revision 9

6.7 EMERGENCY EXPOSURE AUTHORIZATIONS

NOTE

Volunteers 45 years of age or older should receive primary consideration.

___ 6.7.1 Determine the exposure limit for the job assignment on expected radiological conditions using the following table.

Table 1: Exposure Limits

Dose Limits	TEDE	TODE & Thyroid CDE	LDE	SDE	Authorization Required By:
10 CFR 20.1201 Limits (EPA guidance for all workers in emergencies)	≤ 5 REM per Year	≤ 50 REM per Year	≤ 15 REM per Year	≤ 50 REM per Year	Radiation Protection Monitor / Radiation Protection Coordinator
EPA Guidance for Protecting Property	5-10 REM per Event	50-100 REM per Event	15-30 REM per Event	50-100 REM per Event	Emergency Coordinator (EC-STSC) or Emergency Coordinator TSC only (when lower limits are not practicable)
EPA Guidance for Life-Saving or Protection of Large Populations	≤ 25 REM per Event	≤ 250 REM per Event	≤ 75 REM per Event	≤ 250 REM per Event	Emergency Coordinator (EC-STSC) or Emergency Coordinator TSC only (when lower limits are not practicable)
EPA Guidance for Life-Saving or Protection of Large Populations (on a Voluntary Basis Only)	> 25 REM per Event	> 250 REM per Event	>75 REM per Event	>250 REM per Event	Emergency Coordinator (EC) or Emergency Coordinator TSC only (and a risk discussion must be conducted)
"Protecting Valuable Property" includes equipment-saving measures or repair activities that, in the opinion of the Emergency Coordinator, constitutes plant protective measures.					
"Protection of Large Populations" refers to situations where the collective dose avoided by the emergency operation is significantly larger than that incurred by the workers involved.					

Examination Outline Cross-reference:	Level	RO		SRO
	Tier #			3
	Group #			
	K/A #	G 2.4.38		
	Importance Rating			4.4
K/A: Ability to take actions called for in the facility emergency plan, including supporting or acting as emergency coordinator if required				

Question 99

Given the following conditions:

- Unit 1 is operating at 100% power
- Unit 2 is operating at 100% power
- Unit 3 is in MODE 6 for refueling

Subsequently:

- An event occurs which simultaneously places all three units in an ALERT EAL classification

Which unit(s) Shift Manager(s) will assume the Emergency Coordinator responsibility?

A. Unit 1 Shift Manager will assume EC duties for all three units

B. Unit 2 Shift Manager will assume EC duties for all three units

C. Unit 3 Shift Manager will assume EC duties for all three units

D. Each unit Shift Manager will assume EC duties for their own unit until command and control is transferred to the TSC

Answer: A

Explanation:

A. Correct.
B. Plausible since Unit 2 is the middle unit and is in closest proximity to the TSC, however during an event which affects all three units, Unit 1 has the initial command and control function.
C. Plausible since Unit 3 is in an outage and has the highest staffing levels of the three units, however during an event which affects all three units, Unit 1 has the initial command and control function.
D. Plausible since each unit has the equipment and resources to perform the initial command and control function for an emergency event, and the event has resulted in a classifiable event in each of the three units, however when an event affects all three units, Unit 1 has control.

Question Source:		**Bank**	
		Modified Bank	
	x	**New**	
		Previous NRC Exam	

Question Cognitive Level:	**x**	**Memory or Fundamental Knowledge**
		Comprehension or Analysis
	2	**Level of Difficulty**

10 CFR Part 55 Content:	**43.5**

Reference Provided:	**None**

Learning Objective:	Determine who should be the Emergency Coordinator

SRO Justification:

Master Task List

All tasks in (189524) Senior Reactor Operator

Task#	Task	Trained	Retrained	Deselection Reason
1060010402	T Direct operations with CPC out of service for low power or reactor shutdown			Not a task
1200010702	T Initiate containment cleanliness inspections	●		
1230020502	T Approve a calculation of estimated critical rod position	●		
1230020602	T Approve a calculation of estimated critical boron concentration	●		
1230030502	T Review a determination of anticipated critical position	●	2 Years	
1230050302	T Implement the contaminated water management program	●	2 Years	
1240010402	T Perform the SPTA diagnostic	●	Yearly	
1240000402	T Utilize the FRP resource assesment trees (RATS)	●		
1240000302	T Perform FRP safety function tracking	●	Yearly	
1240000702	T Direct the functional recovery long term actions	●		
1240001002	T Direct the LMFR entry procedure instructions and contingencies	●	Yearly	
1240001202	T Utilize the LMFR resource assessment tree (RAT)	●		
1240001102	T Perform the LMFR safety function tracking	●		
1240001302	T Perform the LMFR safety function status check	●		
1240001802	T Perform the LMFR long term actions	●		
1240100202	T Classify events requiring emergency plan implementation	●	Yearly	
1240100302	T Direct an emergency response as the emergency coordinator (EC)	●	Yearly	

SRO Justification:

ES-401N **7** **Attachment 2**

- knowledge of when to implement attachments and appendices, including how to coordinate these items with procedure steps
- knowledge of diagnostic steps and decision points in the emergency operating procedures (EOPs) that involve transitions to event-specific sub-procedures or emergency contingency procedures
- knowledge of administrative procedures that specify hierarchy, implementation, and/or coordination of plant normal, abnormal, and emergency procedures

Technical Reference: PVNGS Emergency Plan

In the event the TSC becomes uninhabitable, the TSC command function will operate out of the affected unit's STSC (Unit 1, if multiple units are impacted) and the support staff will be relocated to an OSC.

Technical Reference: EP-0901, Classifications

2.0 RESPONSIBILITIES

2.1 The Emergency Coordinator - (EC-STSC) has the non-delegable responsibility for classification of emergencies when in Command and Control.

2.2 During emergency situations where the EC-STSC is physically prevented from fulfilling emergency plan requirements (e.g., unable to return to the control room, personnel injury), the following hierarchy shall be followed:

- Plant Transient NOT in Progress – The Control Room Supervisor (CRS) is responsible for emergency plan implementation until relieved by the EC-STSC. The CRS is responsible to make the initial classification prior to being relieved by the EC-STSC.
- Plant Transient in Progress – The CRS is responsible to assign an EC qualified individual to implement the Emergency Plan until relieved by the Shift Manager (SM). The assigned individual should be in order of preference: Unaffected Unit Shift Manager or another qualified EC-STSC.

2.3 The Emergency Coordinator - (EC-TSC) has the non-delegable responsibility for classification of emergencies when in Command and Control.

2.4 The Shift Manager (SM) in the affected unit normally becomes the EC if only one unit is involved. If multiple units are affected, then the Unit 1 SM will be the EC unless Units 2 or 3 have already declared an event in which case the EC remains in the initially affected unit.

Examination Outline Cross-reference:	Level	RO		SRO
	Tier #			3
	Group #			
	K/A #	G 2.4.37		
	Importance Rating			4.1
K/A: Knowledge of the lines of authority during implementation of the emergency plan				

Question 100

Given the following conditions:

- A Site Area Emergency has been declared in Unit 1
- The TSC and EOF have been activated and have established minimum manning
- The Emergency Coordinator (STSC) has transferred command and control to the Technical Support Center (TSC) and the Emergency Operating Facility (EOF)

Following the transfer of command and control, an upgrade to a General Emergency would be the responsibility of the ___(1)___ and performance of any Protective Action Recommendations would be the responsibility of the ___(2)___ .

A. (1) TSC
(2) TSC

B. (1) TSC
(2) EOF

C. (1) EOF
(2) TSC

D. (1) EOF
(2) EOF

Answer: B

Explanation:

A. First part is correct. Second part is plausible since the TSC issues KI which is often a part of the PAR, however the PAR comes from the EOF.
B. Correct.
C. First part is plausible since the EOF makes notifications and PARs following the transfer of command and control, however changes to EAL classifications are the responsibility of the TSC. Second part is plausible since the TSC issues KI which is often a part of the PAR, however the PAR comes from the EOF.
D. First part is plausible since the EOF makes notifications and PARs following the transfer of command and control, however changes to EAL classifications are the responsibility of the TSC. Second part is correct.

Question Source:		**Bank**	
		Modified Bank	
	x	**New**	
		Previous NRC Exam	

Question Cognitive Level:	**x**	**Memory or Fundamental Knowledge**
		Comprehension or Analysis
	3	**Level of Difficulty**

10 CFR Part 55 Content:	**43.5**

Reference Provided:	**None**

Learning Objective:	Identify the non-delegated responsibilities of the Emergency Coordinator

SRO Justification:

Master Task List

All tasks in (189524) Senior Reactor Operator

Task#	Task	Trained	Retrained	Deselection Reason
1060010402	T Direct operations with CPC out of service for low power or reactor shutdown			Not a task
1200010702	T Initiate containment cleanliness inspections	●		
1230020502	T Approve a calculation of estimated critical rod position	●		
1230020602	T Approve a calculation of estimated critical boron concentration	●		
1230030502	T Review a determination of anticipated critical position	●	2 Years	
1230050302	T Implement the contaminated water management program	●	2 Years	
1240010402	T Perform the SPTA diagnostic	●	Yearly	
1240000402	T Utilize the FRP resource assesment trees (RATS)	●		
1240000302	T Perform FRP safety function tracking	●	Yearly	
1240000702	T Direct the functional recovery long term actions	●		
1240001002	T Direct the LMFR entry procedure instructions and contingencies	●	Yearly	
1240001202	T Utilize the LMFR resource assessment tree (RAT)	●		
1240001102	T Perform the LMFR safety function tracking	●		
1240001302	T Perform the LMFR safety function status check	●		
1240001802	T Perform the LMFR long term actions	●		
1240100202	T Classify events requiring emergency plan implementation	●	Yearly	
1240100302	T Direct an emergency response as the emergency coordinator (EC)	●	Yearly	
1240100402	T Determine protective action recommendations (PAR)	●	Yearly	

SRO Justification:

ES-401N **7** **Attachment 2**

- knowledge of when to implement attachments and appendices, including how to coordinate these items with procedure steps
- knowledge of diagnostic steps and decision points in the emergency operating procedures (EOPs) that involve transitions to event-specific sub-procedures or emergency contingency procedures
- knowledge of administrative procedures that specify hierarchy, implementation, and/or coordination of plant normal, abnormal, and emergency procedures

Technical Reference: EP-0904, ERO-ERF Activation and Operation

RESPONSIBILITIES

2.1 Non-delegable Responsibilities

2.1.1 The following responsibilities will be transferred from the Emergency Coordinator (EC-STSC) in the Control Room to the Emergency Operations Director EOF.

- Final decision to notify the offsite agencies
- Final decision to recommend protective actions to the offsite agencies

2.1.2 The following responsibilities will be transferred from the EC-STSC to the EC-TSC.

- Final decision to declare the emergency classification
- Final decision for issuance of thyroid blocking agents (KI) to Palo Verde Nuclear Generating Station emergency workers and/or onsite personnel.
- Authorization of personnel exposure per EPA-400 limits

2.1.3 The non-delegable responsibilities will move with the transfer of Command and Control as indicated.

EC – STSC	EC - TSC	EOD - EOF
Classification	X	
PARs		X
Notifications		X
Emergency Exposure Controls	X	
Potassium Iodide Issuance	X	

2018 PVNGS NRC Initial Written Exam Answer Key

RO Exam						SRO Exam	
1.	C	26.	C	51.	B	76.	A
2.	B	27.	B	52.	C	77.	D
3.	C	28.	C	53.	A	78.	B
4.	A	29.	D	54.	B	79.	C
5.	A	30.	C	55.	B	80.	A
6.	A	31.	A	56.	A	81.	C
7.	B	32.	D	57.	C	82.	D
8.	C	33.	C	58.	C	83.	A
9.	C	34.	D	59.	B	84.	A
10.	D	35.	B	60.	B	85.	B
11.	B	36.	B	61.	A	86.	D
12.	B	37.	A	62.	C	87.	C
13.	B	38.	B	63.	B	88.	C
14.	A	39.	D	64.	A	89.	A
15.	C	40.	D	65.	B	90.	C
16.	B	41.	B	66.	D	91.	D
17.	D	42.	A	67.	D	92.	C
18.	A	43.	C	68.	B	93.	D
19.	D	44.	B	69.	B	94.	C
20.	D	45.	D	70.	C	95.	B
21.	D	46.	D	71.	B	96.	D
22.	A	47.	D	72.	D	97.	B
23.	A	48.	A	73.	A	98.	C
24.	B	49.	C	74.	C	99.	A
25.	D	50.	C	75.	C	100.	B

A: 16 / 6 / 22

B: 23 / 5 / 28

C: 19 / 8 / 27

D: 17 / 6 / 23
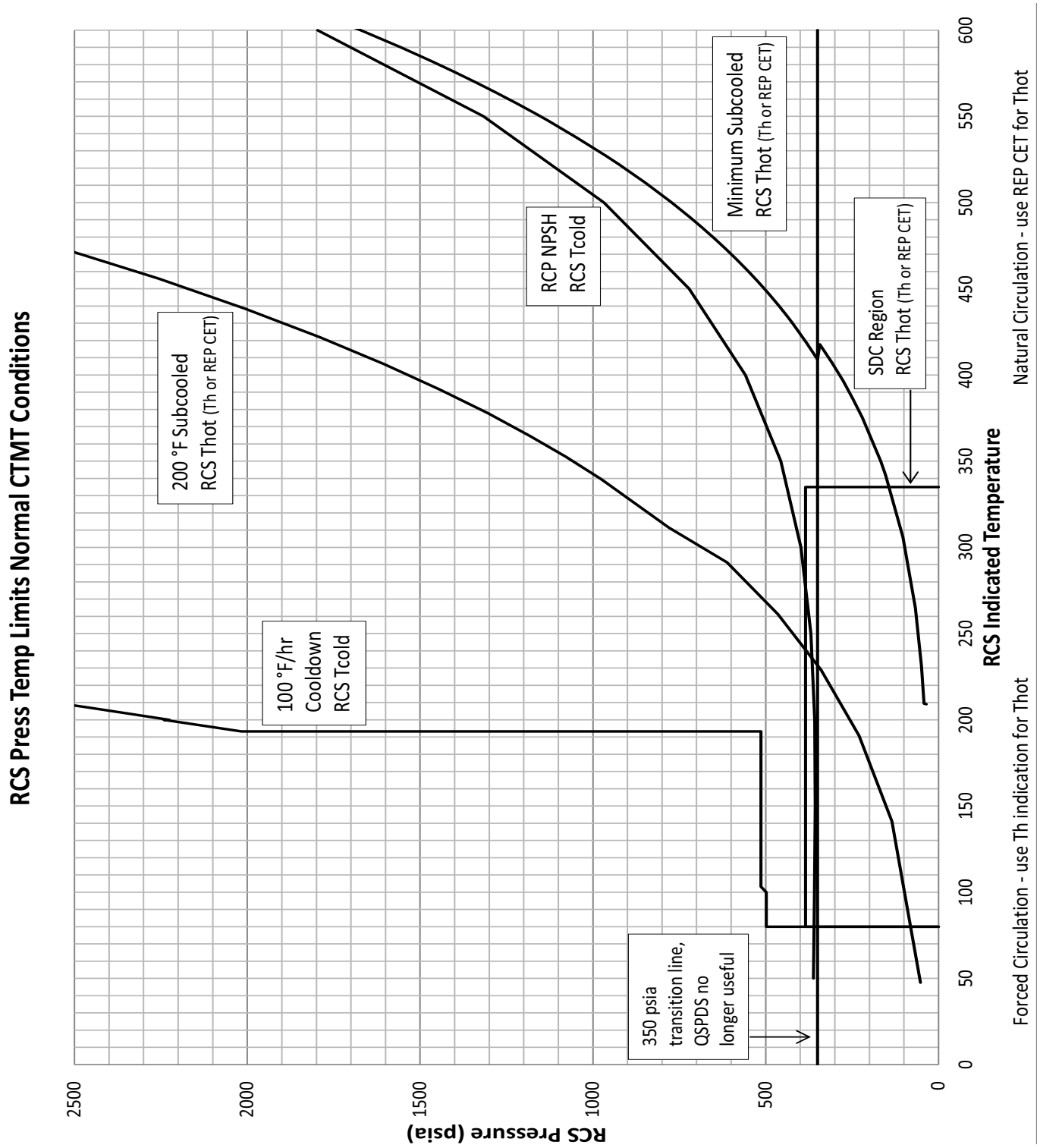
Appendix 2,
Figures