PROPOSED CERTIFICATE OF COMPLIANCE NO. 1014

APPENDIX B

APPROVED CONTENTS AND DESIGN FEATURES

FOR THE HI-STORM 100 CASK SYSTEM

TABLE OF CONTENTS

1.0 DEFINITIONS 1-1

2.0 APPROVED CONTENTS 2-1
2.1 Fuel Specification and Loading Conditions 2-1
2.2 Violations 2-2
2.3 Not Used 2-2
2.4 Decay Heat, Burnup & Cooling Time Limits for ZR Clad Fuel 2-49

Figure 2.1-1 Fuel Loading Regions – MPC-24 2-3
Figure 2.1-2 Fuel Loading Regions – MPC-24E/24EF 2-4
Figure 2.1-3 Fuel Loading Regions – MPC-32/32F 2-5
Figure 2.1-4 Fuel Loading Regions – MPC-68/68FF/68M 2-6

Table 2.1-1 Fuel Assembly Limits 2-7
Table 2.1-2 PWR Fuel Assembly Characteristics 2-37
Table 2.1-3 BWR Fuel Assembly Characteristics 2-42
Table 2.1-4 Table Deleted .....
Table 2.1-5 Table Deleted .....
Table 2.1-6 Table Deleted .....
Table 2.1-7 Table Deleted .....
Table 2.1-8 Non-Fuel Hardware Cooling and Average Burnup 2-48
Table 2.4-1 Maximum Allowable Decay Heat per Fuel Storage Location 2-49
Table 2.4-2 Fuel Storage Locations per MPC 2-49
Table 2.4-3 PWR Fuel Assembly Cooling Time-Dependent Coefficients 2-53
Table 2.4-4 BWR Fuel Assembly Cooling Time-Dependent Coefficients 2-61

3.0 DESIGN FEATURES 3-1

3.1 Site 3-1
3.2 Design Features Important for Criticality Control 3-1
3.3 Codes and Standards 3-2
3.4 Site Specific Parameters and Analyses 3-13
3.5 Cask Transfer Facility (CTF) 3-17
3.6 Forced Helium Dehydration System 3-20
3.7 Supplemental Cooling System 3-22
3.8 Combustible Gas Monitoring During MPC Lid Welding and Cutting 3-25
3.9 Environmental Temperature Requirements 3-25

Table 3-1 List of ASME Code Alternatives for HI-STORM 100 Cask System 3-4
Table 3-2 Load Combinations and Service Condition Definitions for the CTF Structure 3-19
Table 3-3 Requirements for Supplemental Cooling System 3-24

1.0 Definitions

Refer to Appendix A for Definitions.

2.0 APPROVED CONTENTS

2.1 Fuel Specifications and Loading Conditions

2.1.1 Fuel To Be Stored In The HI-STORM 100 SFSC System

a. INTACT FUEL ASSEMBLIES, UNDAMAGED FUEL ASSEMBLIES, DAMAGED FUEL ASSEMBLIES, FUEL DEBRIS, and NON-FUEL HARDWARE meeting the limits specified in Table 2.1-1 and other referenced tables may be stored in the HI-STORM 100 SFSC System.

b. For MPCs partially loaded with stainless steel clad fuel assemblies, all remaining fuel assemblies in the MPC shall meet the decay heat generation limit for the stainless steel clad fuel assemblies.

c. For MPCs partially loaded with array/class 6x6A, 6x6B, 6x6C, 7x7A, or 8x8A fuel assemblies, all remaining ZR clad INTACT FUEL ASSEMBLIES in the MPC shall meet the decay heat generation limits for the 6x6A, 6x6B, 6x6C, 7x7A and 8x8A fuel assemblies.

d. All BWR fuel assemblies may be stored with or without ZR channels with the exception of array/class 10x10D and 10x10E fuel assemblies, which may be stored with or without ZR or stainless steel channels.

2.1.2 Uniform Fuel Loading

Any authorized fuel assembly may be stored in any fuel storage location, subject to other restrictions related to DAMAGED FUEL, FUEL DEBRIS, and NON-FUEL HARDWARE specified in the CoC.

(continued)

2.0 Approved Contents

2.1 Fuel Specifications and Loading Conditions (cont'd)

2.1.3 Regionalized Fuel Loading

Users may choose to store fuel using regionalized loading in lieu of uniform loading to allow higher heat emitting fuel assemblies to be stored than would otherwise be able to be stored using uniform loading. Regionalized loading is limited to INTACT FUEL ASSEMBLIES or UNDAMAGED FUEL ASSEMBLIES with ZR cladding. Figures 2.1-1 through 2.1-4 define the regions for the MPC-24, MPC-24E, MPC-24EF, MPC-32, MPC-32F, MPC-68, MPC-68FF, and MPC-68M models, respectively[1]. Fuel assemblydecay heat limits for regionalized loading are specified in Section 2.4.2. Fuel assemblies used in regionalized loading shall meet all other applicable limits specified in Tables 2.1-1 through 2.1-3.

2.2 Violations

If any Fuel Specifications or Loading Conditions of 2.1 are violated, the following actions shall be completed:

2.2.1 The affected fuel assemblies shall be placed in a safe condition.

2.2.2 Within 24 hours, notify the NRC Operations Center.

2.2.3 Within 30 days, submit a special report which describes the cause of the violation, and actions taken to restore compliance and prevent recurrence.

2.3 Not Used

[1] These figures are only intended to distinguish the fuel loading regions. Other details of the basket design are illustrative and may not reflect the actual basket design details. The design drawings should be consulted for basket design details.

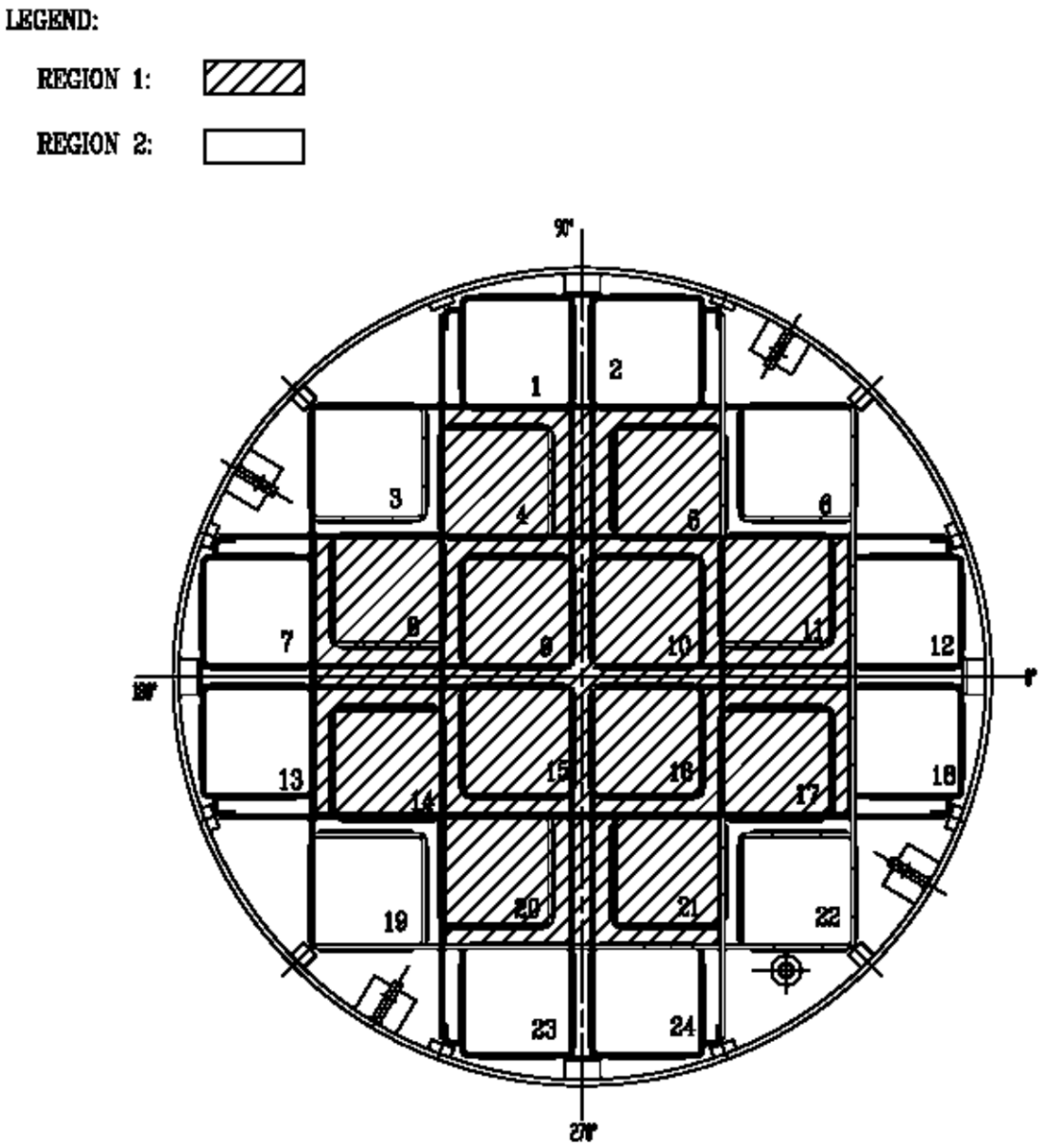

Figure 2.1-1
Fuel Loading Regions - MPC-24

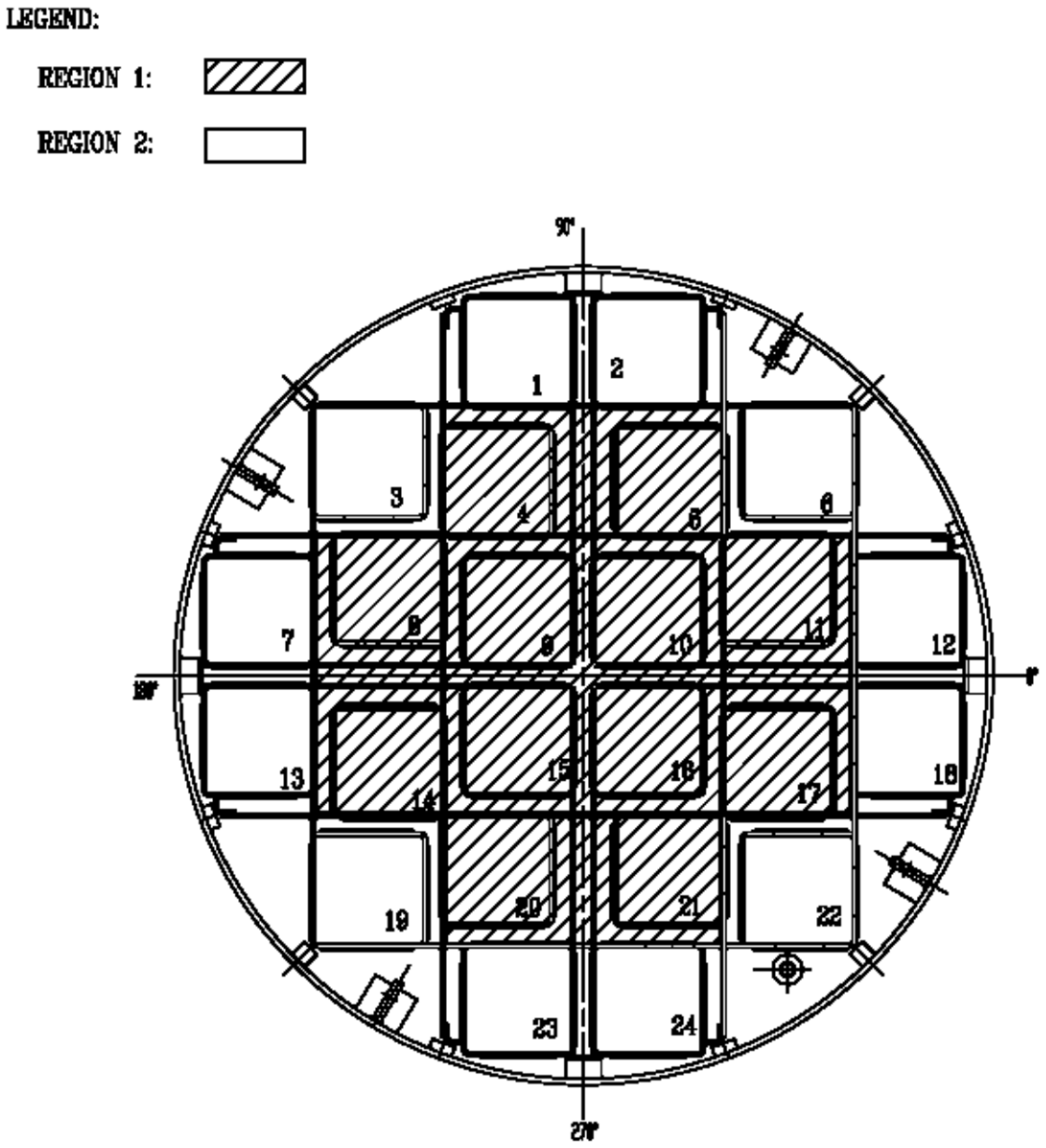

Figure 2.1-2
Fuel Loading Regions - MPC-24E/24EF

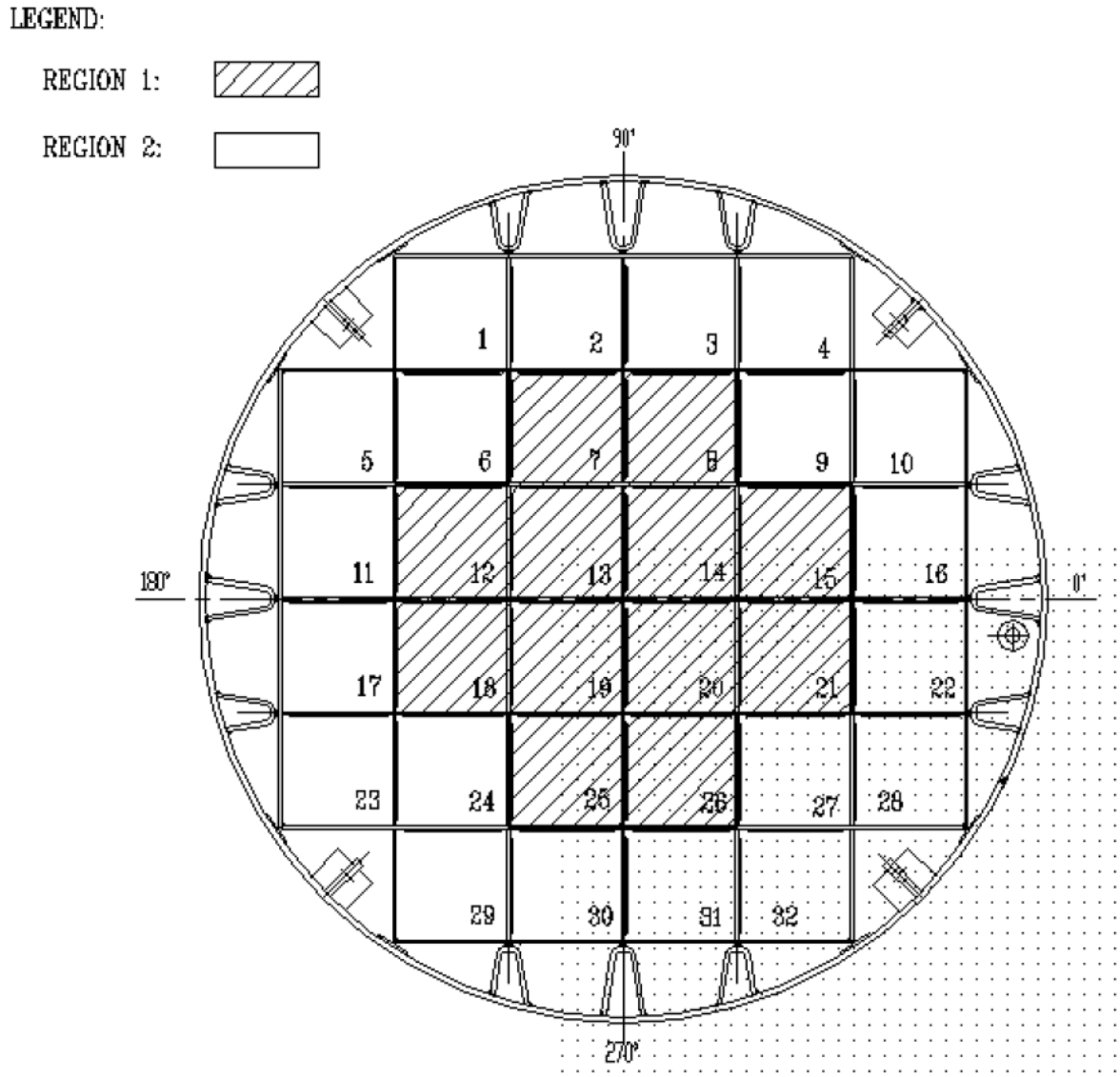

Figure 2.1-3
Fuel Loading Regions - MPC-32/32F

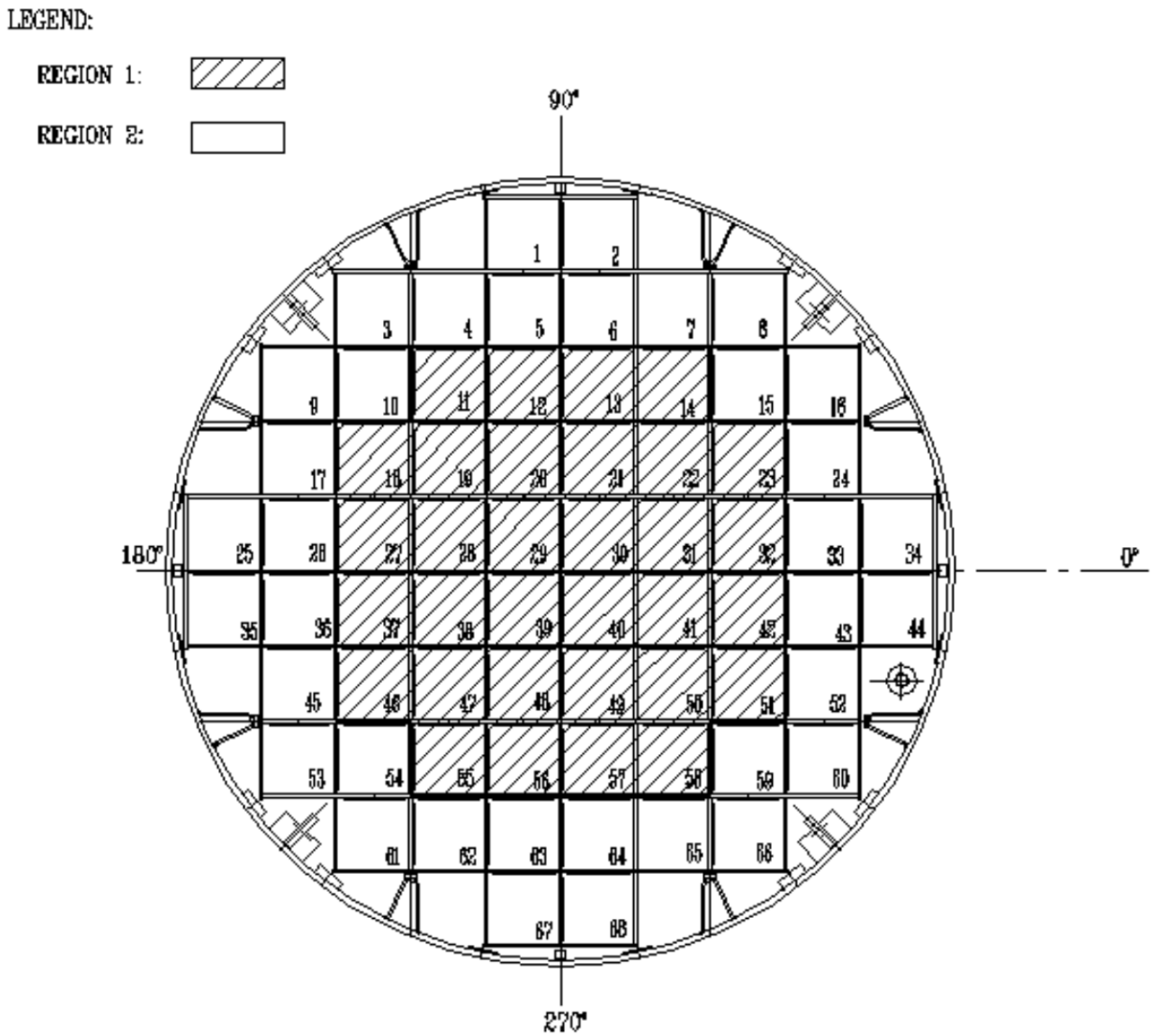

Figure 2.1-4
Fuel Loading Regions - MPC-68/68FF/68M

Table 2.1-1 (page 1 of 30)
Fuel Assembly Limits

I. MPC MODEL: MPC-24

A. Allowable Contents

1. Uranium oxide, PWR INTACT FUEL ASSEMBLIES listed in Table 2.1-2, with or without NON-FUEL HARDWARE and meeting the following specifications (Note 1):

a. Cladding Type:	ZR or Stainless Steel (SS) as specified in Table 2.1-2 for the applicable fuel assembly array/class.
b. Initial Enrichment:	As specified in Table 2.1-2 for the applicable fuel assembly array/class.
c. Post-irradiation Cooling Time and Average Burnup Per Assembly:	
i. Array/Classes 14x14D,14x14E, and 15x15G	Cooling time ≥ 8 years and an average burnup ≤ 40,000 MWD/MTU.
ii. All Other Array/Classes	Cooling time and average burnup as specified in Section 2.4.
ii. NON-FUEL HARDWARE	As specified in Table 2.1-8.

Table 2.1-1 (page 2 of 30)
Fuel Assembly Limits

I. MPC MODEL: MPC-24 (continued)

A. Allowable Contents (continued)

d. Decay Heat Per Fuel Storage Location:	
i. Array/Classes 14x14D, 14x14E, and 15x15G	≤ 710 Watts
ii. All Other Array/Classes	As specified in Section 2.4.
e. Fuel Assembly Length:	≤ 176.8 inches (nominal design)
f. Fuel Assembly Width:	≤ 8.54 inches (nominal design)
g. Fuel Assembly Weight:	≤ 1720 lbs (including NON-FUEL HARDWARE) for assemblies that do not require fuel spacers, otherwise ≤ 1680 lbs (including NON-FUEL HARDWARE)

B. Quantity per MPC: Up to 24 fuel assemblies.

C. Deleted.

D. DAMAGED FUEL ASSEMBLIES and FUEL DEBRIS are not authorized for loading into the MPC-24.

E. One NSA is authorized for loading into the MPC-24.

Note 1: Fuel assemblies containing BPRAs, TPDs, WABAs, water displacement guide tube plugs, orifice rod assemblies, or vibration suppressor inserts with or without ITTRs, may be stored in any fuel storage location. Fuel assemblies containing APSRs or NSAs may only be loaded in fuel storage locations 9, 10, 15, and/or 16. Fuel assemblies containing CRAs, RCCAs, CEAs may only be stored in fuel storage locations 4, 5, 8 - 11, 14 - 17, 20 and/or 21 (see Figure 2.1-1). These requirements are in addition to any other requirements specified for uniform or regionalized fuel loading.

Table 2.1-1 (page 3 of 30)
Fuel Assembly Limits

II. MPC MODEL: MPC-68F

A. Allowable Contents

1. Uranium oxide, BWR INTACT FUEL ASSEMBLIES, with or without ZR channels. Uranium oxide BWR INTACT FUEL ASSEMBLIES shall meet the criteria specified in Table 2.1-3 for fuel assembly array class 6x6A, 6x6C, 7x7A or 8x8A, and meet the following specifications:

a. Cladding Type:	ZR
b. Maximum PLANAR-AVERAGE INITIAL ENRICHMENT:	As specified in Table 2.1-3 for the applicable fuel assembly array/class.
c. Initial Maximum Rod Enrichment:	As specified in Table 2.1-3 for the applicable fuel assembly array/class.
d. Post-irradiation Cooling Time and Average Burnup Per Assembly:	Cooling time ≥ 18 years and an average burnup ≤ 30,000 MWD/MTU.
e. Decay Heat Per Assembly	≤ 115 Watts
f. Fuel Assembly Length:	≤ 135.0 inches (nominal design)
g. Fuel Assembly Width:	≤ 4.70 inches (nominal design)
h. Fuel Assembly Weight:	≤ 400 lbs, including channels

Table 2.1-1 (page 4 of 30)
Fuel Assembly Limits

II. MPC MODEL: MPC-68F (continued)

A. Allowable Contents (continued)

2. Uranium oxide, BWR DAMAGED FUEL ASSEMBLIES, with or without ZR channels, placed in DAMAGED FUEL CONTAINERS. Uranium oxide BWR DAMAGED FUEL ASSEMBLIES shall meet the criteria specified in Table 2.1-3 for fuel assembly array/class 6x6A, 6x6C, 7x7A, or 8x8A, and meet the following specifications:

a. Cladding Type:	ZR
b. Maximum PLANAR-AVERAGE INITIAL ENRICHMENT:	As specified in Table 2.1-3 for the applicable fuel assembly array/class.
c. Initial Maximum Rod Enrichment:	As specified in Table 2.1-3 for the applicable fuel assembly array/class.
d. Post-irradiation Cooling Time and Average Burnup Per Assembly:	Cooling time ≥ 18 years and an average burnup ≤ 30,000 MWD/MTU.
e. Decay Heat Per Assembly:	≤ 115 Watts
f. Fuel Assembly Length:	≤ 135.0 inches (nominal design)
g. Fuel Assembly Width:	≤ 4.70 inches (nominal design)
h. Fuel Assembly Weight:	≤ 550 lbs, including channels and DFC

Table 2.1-1 (page 5 of 30)
Fuel Assembly Limits

II. MPC MODEL: MPC-68F (continued)

A. Allowable Contents (continued)

3. Uranium oxide, BWR FUEL DEBRIS, with or without ZR channels, placed in DAMAGED FUEL CONTAINERS. The original fuel assemblies for the uranium oxide BWR FUEL DEBRIS shall meet the criteria specified in Table 2.1-3 for fuel assembly array/class 6x6A, 6x6C, 7x7A, or 8x8A, and meet the following specifications:

a. Cladding Type:	ZR
b. Maximum PLANAR-AVERAGE INITIAL ENRICHMENT:	As specified in Table 2.1-3 for the applicable original fuel assembly array/class.
c. Initial Maximum Rod Enrichment:	As specified in Table 2.1-3 for the applicable original fuel assembly array/class.
d. Post-irradiation Cooling Time and Average Burnup Per Assembly	Cooling time ≥ 18 years and an average burnup ≤ 30,000 MWD/MTU for the original fuel assembly.
e. Decay Heat Per Assembly	≤ 115 Watts
f. Original Fuel Assembly Length	≤ 135.0 inches (nominal design)
g. Original Fuel Assembly Width	≤ 4.70 inches (nominal design)
h. Fuel Debris Weight	≤ 550 lbs, including channels and DFC

Table 2.1-1 (page 6 of 30)
Fuel Assembly Limits

II. MPC MODEL: MPC-68F (continued)

A. Allowable Contents (continued)

4. Mixed oxide (MOX), BWR INTACT FUEL ASSEMBLIES, with or without ZR channels. MOX BWR INTACT FUEL ASSEMBLIES shall meet the criteria specified in Table 2.1-3 for fuel assembly array/class 6x6B, and meet the following specifications:

a. Cladding Type:	ZR
b. Maximum PLANAR-AVERAGE INITIAL ENRICHMENT:	As specified in Table 2.1-3 for fuel assembly array/class 6x6B.
c. Initial Maximum Rod Enrichment:	As specified in Table 2.1-3 for fuel assembly array/class 6x6B.
d. Post-irradiation Cooling Time and Average Burnup Per Assembly:	Cooling time ≥ 18 years and an average burnup ≤ 30,000 MWD/MTIHM.
e. Decay Heat Per Assembly	≤ 115 Watts
f. Fuel Assembly Length:	≤ 135.0 inches (nominal design)
g. Fuel Assembly Width:	≤ 4.70 inches (nominal design)
h. Fuel Assembly Weight:	≤ 400 lbs, including channels

Table 2.1-1 (page 7 of 30)
Fuel Assembly Limits

II. MPC MODEL: MPC-68F (continued)

A. Allowable Contents (continued)

5. Mixed oxide (MOX), BWR DAMAGED FUEL ASSEMBLIES, with or without ZR channels, placed in DAMAGED FUEL CONTAINERS. MOX BWR DAMAGED FUEL ASSEMBLIES shall meet the criteria specified in Table 2.1-3 for fuel assembly array/class 6x6B, and meet the following specifications:

a. Cladding Type:	ZR
b. Maximum PLANAR-AVERAGE INITIAL ENRICHMENT:	As specified in Table 2.1-3 for fuel assembly array/class 6x6B.
c. Initial Maximum Rod Enrichment:	As specified in Table 2.1-3 for fuel assembly array/class 6x6B.
d. Post-irradiation Cooling Time and Average Burnup Per Assembly:	Cooling time ≥ 18 years and an average burnup ≤ 30,000 MWD/MTIHM.
e. Decay Heat Per Assembly	≤ 115 Watts
f. Fuel Assembly Length:	≤ 135.0 inches (nominal design)
g. Fuel Assembly Width:	≤ 4.70 inches (nominal design)
h. Fuel Assembly Weight:	≤ 550 lbs, including channels and DFC

Table 2.1-1 (page 8 of 30)
Fuel Assembly Limits

II. MPC MODEL: MPC-68F (continued)

A. Allowable Contents (continued)

6. Mixed Oxide (MOX), BWR FUEL DEBRIS, with or without ZR channels, placed in DAMAGED FUEL CONTAINERS. The original fuel assemblies for the MOX BWR FUEL DEBRIS shall meet the criteria specified in Table 2.1-3 for fuel assembly array/class 6x6B, and meet the following specifications:

a. Cladding Type:	ZR
b. Maximum PLANAR-AVERAGE INITIAL ENRICHMENT:	As specified in Table 2.1-3 for original fuel assembly array/class 6x6B.
c. Initial Maximum Rod Enrichment:	As specified in Table 2.1-3 for original fuel assembly array/class 6x6B.
d. Post-irradiation Cooling Time and Average Burnup Per Assembly:	Cooling time ≥ 18 years and an average burnup ≤ 30,000 MWD/MTIHM for the original fuel assembly.
e. Decay Heat Per Assembly	≤ 115 Watts
f. Original Fuel Assembly Length:	≤ 135.0 inches (nominal design)
g. Original Fuel Assembly Width:	≤ 4.70 inches (nominal design)
h. Fuel Debris Weight:	≤ 550 lbs, including channels and DFC

Table 2.1-1 (page 9 of 30)
Fuel Assembly Limits

II. MPC MODEL: MPC-68F (continued)

A. Allowable Contents (continued)

7. Thoria rods (ThO_2 and UO_2) placed in Dresden Unit 1 Thoria Rod Canisters and meeting the following specifications:

a. Cladding Type:	ZR
b. Composition:	98.2 wt.% ThO_2, 1.8 wt. % UO_2 with an enrichment of 93.5 wt. % ^{235}U. OR 98.5 wt.% ThO2, 1.5 wt.% UO2 with an enrichment of 93.5 wt.% ^{235}U
c. Number of Rods Per Thoria Rod Canister:	≤ 18
d. Decay Heat Per Thoria Rod Canister:	≤ 115 Watts
e. Post-irradiation Fuel Cooling Time and Average Burnup Per Thoria Rod Canister:	A fuel post-irradiation cooling time ≥ 18 years and an average burnup ≤ 16,000 MWD/MTIHM.
f. Initial Heavy Metal Weight:	≤ 27 kg/canister
g. Fuel Cladding O.D.:	≥ 0.412 inches
h. Fuel Cladding I.D.:	≤ 0.362 inches
i. Fuel Pellet O.D.:	≤ 0.358 inches
j. Active Fuel Length:	≤ 111 inches
k. Canister Weight:	≤ 550 lbs, including fuel

Table 2.1-1 (page 10 of 30)
Fuel Assembly Limits

II. MPC MODEL: MPC-68F (continued)

B. Quantity per MPC (up to a total of 68 assemblies):
(All fuel assemblies must be array/class 6x6A, 6x6B, 6x6C, 7x7A, or 8x8A):

Up to four (4) DFCs containing uranium oxide BWR FUEL DEBRIS or MOX BWR FUEL DEBRIS. The remaining MPC-68F fuel storage locations may be filled with fuel assemblies of the following type, as applicable:

1. Uranium oxide BWR INTACT FUEL ASSEMBLIES;
2. MOX BWR INTACT FUEL ASSEMBLIES;
3. Uranium oxide BWR DAMAGED FUEL ASSEMBLIES placed in DFCs;
4. MOX BWR DAMAGED FUEL ASSEMBLIES placed in DFCs; or
5. Up to one (1) Dresden Unit 1 Thoria Rod Canister.

C. Fuel assemblies with stainless steel channels are not authorized for loading in the MPC-68F.

D. Dresden Unit 1 fuel assemblies with one Antimony-Beryllium neutron source are authorized for loading in the MPC-68F. The Antimony-Beryllium source material shall be in a water rod location.

Table 2.1-1 (page 11 of 30)
Fuel Assembly Limits

III. MPC MODEL: MPC-68 and MPC-68FF

A. Allowable Contents

1. Uranium oxide or MOX BWR INTACT FUEL ASSEMBLIES listed in Table 2.1-3, with or without channels and meeting the following specifications:

a. Cladding Type:	ZR or Stainless Steel (SS) as specified in Table 2.1-3 for the applicable fuel assembly array/class
b. Maximum PLANAR-AVERAGE INITIAL ENRICHMENT:	As specified in Table 2.1-3 for the applicable fuel assembly array/class.
c. Initial Maximum Rod Enrichment	As specified in Table 2.1-3 for the applicable fuel assembly array/class.
d. Post-irradiation Cooling Time and Average Burnup Per Assembly	
i. Array/Classes 6x6A, 6x6B, 6x6C, 7x7A, and 8x8A	Cooling time ≥ 18 years and an average burnup ≤ 30,000 MWD/MTU (or MWD/MTIHM).
ii. Array/Class 8x8F	Cooling time ≥ 10 years and an average burnup ≤ 27,500 MWD/MTU.
iii. Array/Classes 10x10D and 10x10E	Cooling time ≥ 10 years and an average burnup ≤ 22,500 MWD/MTU.
iv. All Other Array/Classes	As specified in Section 2.4.

Table 2.1-1 (page 12 of 30)
Fuel Assembly Limits

III. MPC MODEL: MPC-68 and MPC-68FF (continued)

A. Allowable Contents (continued)

e. Decay Heat Per Assembly

i. Array/Classes 6x6A, 6X6B, 6x6C, 7x7A, and 8x8A	≤ 115 Watts
ii. Array/Class 8x8F	≤ 183.5 Watts
iii. Array/Classes 10x10D and 10x10E	≤ 95 Watts
iv. All Other Array/Classes	As specified in Section 2.4.

f. Fuel Assembly Length

i. Array/Class 6x6A, 6x6B, 6x6C, 7x7A, or 8x8A	≤ 135.0 inches (nominal design)
ii. All Other Array/Classes	≤ 176.5 inches (nominal design)

g. Fuel Assembly Width

i. Array/Class 6x6A, 6x6B, 6x6C, 7x7A, or 8x8A	≤ 4.70 inches (nominal design)
ii. All Other Array/Classes	≤ 5.85 inches (nominal design)

h. Fuel Assembly Weight

i. Array/Class 6x6A, 6x6B, 6x6C, 7x7A, or 8x8A	≤ 400 lbs, including channels
ii. All Other Array/Classes	≤ 730 lbs, including channels

Table 2.1-1 (page 13 of 30)
Fuel Assembly Limits

III. MPC MODEL: MPC-68 and MPC-68FF (continued)

A. Allowable Contents (continued)

2. Uranium oxide or MOX BWR DAMAGED FUEL ASSEMBLIES or FUEL DEBRIS, with or without channels, placed in DAMAGED FUEL CONTAINERS. Uranium oxide and MOX BWR DAMAGED FUEL ASSEMBLIES and FUEL DEBRIS shall meet the criteria specified in Table 2.1-3, and meet the following specifications:

a. Cladding Type:	ZR or Stainless Steel (SS) in accordance with Table 2.1-3 for the applicable fuel assembly array/class.
b. Maximum PLANAR-AVERAGE INITIAL ENRICHMENT:	
i. Array/Classes 6x6A, 6x6B, 6x6C, 7x7A, and 8x8A.	As specified in Table 2.1-3 for the applicable fuel assembly array/class.
ii. All Other Array Classes	≤ 4.0 wt.% ^{235}U.
c. Initial Maximum Rod Enrichment	As specified in Table 2.1-3 for the applicable fuel assembly array/class.
d. Post-irradiation Cooling Time and Average Burnup Per Assembly:	
i. Array/Class 6x6A, 6x6B, 6x6C, 7x7A, or 8x8A	Cooling time ≥ 18 years and an average burnup ≤ 30,000 MWD/MTU (or MWD/MTIHM).
ii. Array/Class 8x8F	Cooling time ≥ 10 years and an average burnup ≤ 27,500 MWD/MTU.
iii. Array/Class 10x10D and 10x10E	Cooling time ≥ 10 years and an average burnup ≤ 22,500 MWD/MTU.
iv. All Other Array/Classes	As specified in Section 2.4.

Table 2.1-1 (page 14 of 30)
Fuel Assembly Limits

III. MPC MODEL: MPC-68 and MPC-68FF (continued)

A. Allowable Contents (continued)

e. Decay Heat Per Assembly

i. Array/Class 6x6A, 6x6B, 6x6C, 7x7A, or 8x8A	≤ 115 Watts
ii. Array/Class 8x8F	≤ 183.5 Watts
iii. Array/Classes 10x10D and 10x10E	≤ 95 Watts
iv. All Other Array/Classes	As specified in Section 2.4.

f. Fuel Assembly Length

i. Array/Class 6x6A, 6x6B, 6x6C, 7x7A, or 8x8A	≤ 135.0 inches (nominal design)
ii. All Other Array/Classes	≤ 176.5 inches (nominal design)

g. Fuel Assembly Width

i. Array/Class 6x6A, 6x6B, 6x6C, 7x7A, or 8x8A	≤ 4.70 inches (nominal design)
ii. All Other Array/Classes	≤ 5.85 inches (nominal design)

h. Fuel Assembly Weight

i. Array/Class 6x6A, 6x6B, 6x6C, 7x7A, or 8x8A	≤ 550 lbs, including channels and DFC
ii. All Other Array/Classes	≤ 830 lbs, including channels and DFC

Table 2.1-1 (page 15 of 30)
Fuel Assembly limits

III. MPC MODEL: MPC-68 and MPC-68FF (continued)

A. Allowable Contents (continued)

3. Thoria rods (ThO_2 and UO_2) placed in Dresden Unit 1 Thoria Rod Canisters and meeting the following specifications:

a. Cladding type	ZR
b. Composition	98.2 wt.% ThO_2, 1.8 wt.% UO_2 with an enrichment of 93.5 wt.% ^{235}U. OR 98.5 wt.% ThO2, 1.5 wt.% UO2 with an enrichment of 93.5% wt.% ^{235}U
c. Number of Rods per Thoria Rod Canister:	≤ 18
d. Decay Heat Per Thoria Rod Canister:	≤ 115 Watts
e. Post-irradiation Fuel Cooling Time and Average Burnup per Thoria Rod Canister:	A fuel post-irradiation cooling time ≥ 18 years and an average burnup ≤16,000 MWD/MTIHM
f. Initial Heavy Metal Weight:	≤ 27 kg/canister
g. Fuel Cladding O.D.:	≥ 0.412 inches
h. Fuel Cladding I.D.:	≤ 0.362 inches
i. Fuel Pellet O.D.:	≤ 0.358 inches
j. Active Fuel Length:	≤ 111 inches
k. Canister Weight:	≤ 550 lbs, including fuel

Table 2.1-1 (page 16 of 30)
Fuel Assembly Limits

III. MPC MODEL: MPC-68 and MPC-68FF (continued)

B. Quantity per MPC (up to a total of 68 assemblies)

1. For fuel assembly array/classes 6x6A, 6X6B, 6x6C, 7x7A, or 8x8A, up to 68 BWR INTACT FUEL ASSEMBLIES and/or DAMAGED FUEL ASSEMBLIES. Up to eight (8) DFCs containing FUEL DEBRIS from these array/classes may be stored.

2. For all other array/classes, up to sixteen (16) DFCs containing BWR DAMAGED FUEL ASSEMBLIES and/or up to eight (8) DFCs containing FUEL DEBRIS. DFCs shall be located only in fuel storage locations 1, 2, 3, 8, 9, 16, 25, 34, 35, 44, 53, 60, 61, 66, 67, and/or 68. The remaining fuel storage locations may be filled with fuel assemblies of the following type:

   i. Uranium Oxide BWR INTACT FUEL ASSEMBLIES; or

   ii. MOX BWR INTACT FUEL ASSEMBLIES.

3. Up to one (1) Dresden Unit 1 Thoria Rod Canister

C. Dresden Unit 1 fuel assemblies with one Antimony-Beryllium neutron source are authorized for loading. The Antimony-Beryllium source material shall be in a water rod location.

D. Array/Class 10x10D and 10x10E fuel assemblies in stainless steel channels must be stored in fuel storage locations 19 - 22, 28 - 31, 38 -41, and/or 47 - 50 (see Figure 2.1-4).

Table 2.1-1 (page 17 of 30)
Fuel Assembly Limits

IV. MPC MODEL: MPC-24E and MPC-24EF

A. Allowable Contents

1. Uranium oxide, PWR INTACT FUEL ASSEMBLIES listed in Table 2.1-2, with or without NON-FUEL HARDWARE and meeting the following specifications (Note 1):

a. Cladding Type:	ZR or Stainless Steel (SS) as specified in Table 2.1-2 for the applicable fuel assembly array/class
b. Initial Enrichment:	As specified in Table 2.1-2 for the applicable fuel assembly array/class.
c. Post-irradiation Cooling Time and Average Burnup Per Assembly:	
i. Array/Classes 14x14D, 14x14E, and 15x15G	Cooling time ≥ 8 years and an average burnup ≤ 40,000 MWD/MTU.
ii. All Other Array/Classes	As specified in Section 2.4.
iii. NON-FUEL HARDWARE	As specified in Table 2.1-8.

Table 2.1-1 (page 18 of 30)
Fuel Assembly Limits

IV. MPC MODEL: MPC-24E and MPC-24EF (continued)

A. Allowable Contents (continued)

d. Decay Heat Per Fuel Storage Location:	
i. Array/Classes 14x14D, 14x14E, and 15x15G	≤ 710 Watts.
ii. All other Array/Classes	As specified in Section 2.4.
e. Fuel Assembly Length:	≤ 176.8 inches (nominal design)
f. Fuel Assembly Width:	≤ 8.54 inches (nominal design)
g. Fuel Assembly Weight:	≤ 1,720 lbs (including NON-FUEL HARDWARE) for assemblies that do not require fuel spacers, otherwise, ≤ 1,680 lbs (including NON-FUEL HARDWARE)

Table 2.1-1 (page 19 of 30)
Fuel Assembly Limits

IV. MPC MODEL: MPC-24E and MPC-24EF (continued)

A. Allowable Contents (continued)

2. Uranium oxide, PWR DAMAGED FUEL ASSEMBLIES and FUEL DEBRIS, with or without NON-FUEL HARDWARE, placed in DAMAGED FUEL CONTAINERS. Uranium oxide PWR DAMAGED FUEL ASSEMBLIES and FUEL DEBRIS shall meet the criteria specified in Table 2.1-2 and meet the following specifications (Note 1):

a. Cladding Type:	ZR or Stainless Steel (SS) as specified in Table 2.1-2 for the applicable fuel assembly array/class
b. Initial Enrichment:	As specified in Table 2.1-2 for the applicable fuel assembly array/class.
c. Post-irradiation Cooling Time and Average Burnup Per Assembly:	
i. Array/Classes 14x14D, 14x14E, and 15x15G	Cooling time ≥ 8 years and an average burnup ≤ 40,000 MWD/MTU.
ii. All Other Array/Classes	As specified in Section 2.4.
iii. NON-FUEL HARDWARE	As specified in Table 2.1-8.

Table 2.1-1 (page 20 of 30)
Fuel Assembly Limits

IV. MPC MODEL: MPC-24E and MPC-24EF (continued)

A. Allowable Contents (continued)

d. Decay Heat Per Fuel Storage Location:	
i. Array/Classes 14x14D, 14x14E, and 15x15G	≤ 710 Watts.
ii. All Other Array/Classes	As specified in Section 2.4.
e. Fuel Assembly Length	≤ 176.8 inches (nominal design)
f. Fuel Assembly Width	≤ 8.54 inches (nominal design)
g. Fuel Assembly Weight	≤ 1,720 lbs (including NON-FUEL HARDWARE and DFC) for assemblies that do not require fuel spacers, otherwise, ≤ 1,680 lbs (including NON-FUEL HARDWARE and DFC)

B. Quantity per MPC: Up to four (4) DAMAGED FUEL ASSEMBLIES and/or FUEL DEBRIS in DAMAGED FUEL CONTAINERS, stored in fuel storage locations 3, 6, 19 and/or 22. The remaining fuel storage locations may be filled with PWR INTACT FUEL ASSEMBLIES meeting the applicable specifications.

C. One NSA is permitted for loading.

Note 1: Fuel assemblies containing BPRAs, TPDs, WABAs, water displacement guide tube plugs, orifice rod assemblies, or vibration suppressor inserts, with or without ITTRs, may be stored in any fuel storage location. Fuel assemblies containing APSRs or NSAs may only be loaded in fuel storage locations 9, 10, 15, and/or 16 (see Figure 2.1-2). Fuel assemblies containing CRAs, RCCAs, or CEAs may only be stored in fuel storage locations 4, 5, 8 - 11, 14 - 17, 20 and/or 21 (see Figure 2.1-2). These requirements are in addition to any other requirements specified for uniform or regionalized fuel loading.

Table 2.1-1 (page 21 of 30)
Fuel Assembly Limits

V. MPC MODEL: MPC-32 and MPC-32F

A. Allowable Contents

1. Uranium oxide, PWR INTACT FUEL ASSEMBLIES listed in Table 2.1-2, with or without NON-FUEL HARDWARE and meeting the following specifications (Note 1):

a. Cladding Type:	ZR or Stainless Steel (SS) as specified in Table 2.1-2 for the applicable fuel assembly array/class
b. Initial Enrichment:	As specified in Table 2.1-2 for the applicable fuel assembly array/class.
c. Post-irradiation Cooling Time and Average Burnup Per Assembly:	
i. Array/Classes 14x14D, 14x14E, and 15x15G	Cooling time ≥ 9 years and an average burnup ≤ 30,000 MWD/MTU or cooling time ≥ 20 years and an average burnup ≤ 40,000 MWD/MTU.
ii. All Other Array/Classes	As specified in Section 2.4.
iii. NON-FUEL HARDWARE	As specified in Table 2.1-8.

Table 2.1-1 (page 22 of 30)
Fuel Assembly Limits

V. MPC MODEL: MPC-32 and MPC-32F (cont'd)

A. Allowable Contents (cont'd)

d. Decay Heat Per Fuel Storage Location:	
i. Array/Classes 14x14D, 14x14E, and 15x15G	≤ 500 Watts.
ii. All Other Array/Classes	As specified in Section 2.4.
e. Fuel Assembly Length	≤ 176.8 inches (nominal design)
f. Fuel Assembly Width	≤ 8.54 inches (nominal design)
g. Fuel Assembly Weight	≤ 1,720 lbs (including NON-FUEL HARDWARE) for assemblies that do not require fuel spacers, otherwise, ≤ 1,680 lbs (including NON-FUEL HARDWARE)

Table 2.1-1 (page 23 of 30)
Fuel Assembly Limits

V. MPC MODEL: MPC-32 and MPC-32F (cont'd)

A. Allowable Contents (cont'd)

2. Uranium oxide, PWR DAMAGED FUEL ASSEMBLIES and FUEL DEBRIS, with or without NON-FUEL HARDWARE, placed in DAMAGED FUEL CONTAINERS. Uranium oxide PWR DAMAGED FUEL ASSEMBLIES and FUEL DEBRIS shall meet the criteria specified in Table 2.1-2 and meet the following specifications (Note 1):

a. Cladding Type:	ZR or Stainless Steel (SS) as specified in Table 2.1-2 for the applicable fuel assembly array/class
b. Initial Enrichment:	As specified in Table 2.1-2 for the applicable fuel assembly array/class.
c. Post-irradiation Cooling Time and Average Burnup Per Assembly:	
i. Array/Classes 14x14D, 14x14E, and 15x15G	Cooling time ≥ 9 years and an average burnup ≤ 30,000 MWD/MTU or cooling time ≥ 20 years and an average burnup ≤ 40,000 MWD/MTU.
ii. All Other Array/Classes	As specified in Section 2.4.
iii. NON-FUEL HARDWARE	As specified in Table 2.1-8.

Table 2.1-1 (page 24 of 30)
Fuel Assembly Limits

V. MPC MODEL: MPC-32 and MPC-32F (cont'd)

A. Allowable Contents (cont'd)

d. Decay Heat Per Fuel Storage Location:	
i. Array/Classes 14x14D, 14x14E, and 15x15G	≤ 500 Watts.
ii. All Other Array/Classes	As specified in Section 2.4.
e. Fuel Assembly Length	≤ 176.8 inches (nominal design)
f. Fuel Assembly Width	≤ 8.54 inches (nominal design)
g. Fuel Assembly Weight	≤ 1,720 lbs (including NON-FUEL HARDWARE and DFC) for assemblies that do not require fuel spacers, otherwise, ≤ 1,680 lbs (including NON-FUEL HARDWARE and DFC)

B. Quantity per MPC: Up to eight (8) DAMAGED FUEL ASSEMBLIES and/or FUEL DEBRIS in DAMAGED FUEL CONTAINERS, stored in fuel storage locations 1, 4, 5, 10, 23, 28, 29, and/or 32. The remaining fuel storage locations may be filled with PWR INTACT FUEL ASSEMBLIES meeting the applicable specifications.

C. One NSA is permitted for loading.

Note 1: Fuel assemblies containing BPRAs, TPDs, WABAs, water displacement guide tube plugs, orifice rod assemblies, or vibration suppressor inserts, with or without ITTRs, may be stored in any fuel storage location. Fuel assemblies containing NSAs may only be loaded in fuel storage locations 13, 14, 19 and/or 20 (see Figure 2.1-3). Fuel assemblies containing CRAs, RCCAs, CEAs or APSRs may only be loaded in fuel storage locations 7, 8, 12-15, 18-21, 25 and/or 26 (see Figure 2.1-3). These requirements are in addition to any other requirements specified for uniform or regionalized fuel loading.

Table 2.1-1 (page 25 of 30)
Fuel Assembly Limits

VI. MPC MODEL: MPC-68M

A. Allowable Contents

1. Uranium oxide BWR UNDAMAGED FUEL ASSEMBLIES listed in Table 2.1-3, with or without channels and meeting the following specifications:

a. Cladding Type:	ZR
b. Maximum PLANAR-AVERAGE INITIAL ENRICHMENT:	As specified in Table 2.1-3 for the applicable fuel assembly array/class.
c. Initial Maximum Rod Enrichment	As specified in Table 2.1-3 for the applicable fuel assembly array/class.
d. Post-irradiation Cooling Time and Average Burnup Per Assembly	
i. Array/Class 8x8F	Cooling time ≥ 10 years and an average burnup ≤ 27,500 MWD/MTU.
ii. All Other Array/Classes	As specified in Section 2.4.

Table 2.1-1 (page 26 of 30)
Fuel Assembly Limits

VI. MPC MODEL: MPC-68M (continued)

A. Allowable Contents (continued)

e. Decay Heat Per Assembly

i. Array/Class 8x8F	≤ 183.5 Watts
ii. All Other Array/Classes	As specified in Section 2.4.
f. Fuel Assembly Length	≤ 176.5 inches (nominal design)
g. Fuel Assembly Width	≤ 5.85 inches (nominal design)
h. Fuel Assembly Weight	≤ 730 lbs, including channels

Table 2.1-1 (page 27 of 30)
Fuel Assembly Limits

VI. MPC MODEL: MPC-68M (continued)

A. Allowable Contents (continued)

2. Uranium oxide BWR DAMAGED FUEL ASSEMBLIES or FUEL DEBRIS, with or without channels, placed in DAMAGED FUEL CONTAINERS. Uranium oxide BWR DAMAGED FUEL ASSEMBLIES and FUEL DEBRIS shall meet the criteria specified in Table 2.1-3, and meet the following specifications:

a. Cladding Type:	ZR
b. Maximum PLANAR-AVERAGE INITIAL ENRICHMENT:	As specified in Table 2.1-3 for the applicable fuel assembly array/class.
c. Initial Maximum Rod Enrichment	As specified in Table 2.1-3 for the applicable fuel assembly array/class.
d. Post-irradiation Cooling Time and Average Burnup Per Assembly:	
i. Array/Class 8x8F	Cooling time ≥ 10 years and an average burnup ≤ 27,500 MWD/MTU.
ii. All Other Array/Classes	As specified in Section 2.4.

Table 2.1-1 (page 28 of 30)
Fuel Assembly Limits

VI. MPC MODEL: MPC-68M (continued)

A. Allowable Contents (continued)

e. Decay Heat Per Assembly	
i. Array/Class 8x8F	≤ 183.5 Watts
ii. All Other Array/Classes	As specified in Section 2.4.
f. Fuel Assembly Length	≤ 176.5 inches (nominal design)
g. Fuel Assembly Width	≤ 5.85 inches (nominal design)
h. Fuel Assembly Weight	≤ 830 lbs, including channels and DFC

Table 2.1-1 (page 29 of 30)
Fuel Assembly Limits

VI. MPC MODEL: MPC-68M (continued)

A. Allowable Contents (continued)

3. Thoria rods (ThO_2 and UO_2) placed in Dresden Unit 1 Thoria Rod Canisters and meeting the following specifications:

a. Cladding Type:	ZR
b. Composition	98.2 wt.% ThO_2, 1.8 wt.% UO_2 with an enrichment of 93.5 wt.% ^{235}U OR 98.5 wt.% ThO_2, 1.5 wt.% UO_2 with an enrichment of 93.5% wt.% ^{235}U
c. Number of Rods per Thoria Rod Canister:	≤ 18
d. Decay Heat Per Thoria Rod Canister:	≤ 115 Watts
e. Post-irradiation Fuel Cooling Time and Average Burnup per Thoria Rod Canister:	A fuel post-irradiation cooling time ≥ 18 years and an average burnup ≤ 16,000 MWD/MTIHM
f. Initial Heavy Metal Weight:	≤ 27 kg/canister
g. Fuel Cladding O.D.:	≥ 0.412 inches
h. Fuel Cladding I.D.:	≤ 0.362 inches
i. Fuel Pellet O.D.:	≤ 0.358 inches
j. Active Fuel Length:	≤ 111 inches
k. Canister Weight:	≤ 550 lbs, including fuel

Table 2.1-1 (page 30 of 30)
Fuel Assembly Limits

VI. MPC MODEL: MPC-68M (continued)

B. Quantity per MPC (up to a total of 68 assemblies)

1. Up to sixteen (16) DFCs containing BWR DAMAGED FUEL ASSEMBLIES and/or up to eight (8) DFCs containing FUEL DEBRIS. DFCs shall be located only in fuel storage locations 1, 2, 3, 8, 9, 16, 25, 34, 35, 44, 53, 60, 61, 66, 67, and/or 68. The remaining fuel storage locations may be filled with Uranium Oxide BWR UNDAMAGED FUEL ASSEMBLIES.
2. Up to one (1) Dresden Unit 1 Thoria Rod Canister.

Table 2.1-2 (page 1 of 5)

PWR FUEL ASSEMBLY CHARACTERISTICS (Note 1)

Fuel Assembly Array/Class	**14x14A**	**14x14B**	**14x14C**	**14x14D**	**14x14E**
Clad Material	ZR	ZR	ZR	SS	SS
Design Initial U (kg/assy.) (Note 3)	≤ 365	≤ 412	≤ 438	≤ 400	≤ 206
Initial Enrichment (MPC-24, 24E and 24EF without soluble boron credit) (wt % ^{235}U) (Note 7)	≤ 4.6 (24) ≤ 5.0 (24E/24EF)	≤ 4.6 (24) ≤ 5.0 (24E/24EF)	≤ 4.6 (24) ≤ 5.0 (24E/24EF)	≤ 4.0 (24) ≤ 5.0 (24E/24EF)	≤ 5.0 (24) ≤ 5.0 (24E/24EF)
Initial Enrichment (MPC-24, 24E, 24EF, 32, or 32F with soluble boron credit - see Note 5) (wt % ^{235}U)	≤ 5.0	≤ 5.0	≤ 5.0	≤ 5.0	≤ 5.0
No. of Fuel Rod Locations (Note 11)	179	179	176	180	173
Fuel Rod Clad O.D. (in.)	≥ 0.400	≥ 0.417	≥ 0.440	≥ 0.422	≥ 0.3415
Fuel Rod Clad I.D. (in.)	≤ 0.3514	≤ 0.3734	≤ 0.3880	≤ 0.3890	≤ 0.3175
Fuel Pellet Dia. (in.)(Note 8)	≤ 0.3444	≤ 0.3659	≤ 0.3805	≤ 0.3835	≤ 0.3130
Fuel Rod Pitch (in.)	≤ 0.556	≤ 0.556	≤ 0.580	≤ 0.556	Note 6
Active Fuel Length (in.)	≤ 150	≤ 150	≤ 150	≤ 144	≤ 102
No. of Guide and/or Instrument Tubes	17	17	5 (Note 4)	16	0
Guide/Instrument Tube Thickness (in.)	≥ 0.017	≥ 0.017	≥ 0.038	≥ 0.0145	N/A

Table 2.1-2 (page 2 of 5)
PWR FUEL ASSEMBLY CHARACTERISTICS (Note 1)

Fuel Assembly Array/Class	**15x15A**	**15x15B**	**15x15C**	**15x15D**	**15x15E**	**15x15F**
Clad Material	ZR	ZR	ZR	ZR	ZR	ZR
Design Initial U (kg/assy.) (Note 3)	≤ 473	≤ 473	≤ 473	≤ 495	≤ 495	≤ 495
Initial Enrichment (MPC-24, 24E and 24EF without soluble boron credit) (wt % ^{235}U) (Note 7)	≤ 4.1 (24) ≤ 4.5 (24E/24EF)	≤ 4.1 (24) ≤ 4.5 (24E/24EF)	≤ 4.1 (24) ≤ 4.5 (24E/24EF)	≤ 4.1 (24) ≤ 4.5 (24E/24EF)	≤ 4.1 (24) ≤ 4.5 (24E/24EF)	≤ 4.1 (24) ≤ 4.5 (24E/24EF)
Initial Enrichment (MPC-24, 24E, 24EF, 32, or 32F with soluble boron credit - see Note 5)(wt % ^{235}U)	≤ 5.0	≤ 5.0	≤ 5.0	≤ 5.0	≤ 5.0	≤ 5.0
No. of Fuel Rod Locations (Note 11)	204	204	204	208	208	208
Fuel Rod Clad O.D. (in.)	≥ 0.418	≥ 0.420	≥ 0.417	≥ 0.430	≥ 0.428	≥ 0.428
Fuel Rod Clad I.D. (in.)	≤ 0.3660	≤ 0.3736	≤ 0.3640	≤ 0.3800	≤ 0.3790	≤ 0.3820
Fuel Pellet Dia. (in.) (Note 8)	≤ 0.3580	≤ 0.3671	≤ 0.3570	≤ 0.3735	≤ 0.3707	≤ 0.3742
Fuel Rod Pitch (in.)	≤ 0.550	≤ 0.563	≤ 0.563	≤ 0.568	≤ 0.568	≤ 0.568
Active Fuel Length (in.)	≤ 150	≤ 150	≤ 150	≤ 150	≤ 150	≤ 150
No. of Guide and/or Instrument Tubes	21	21	21	17	17	17
Guide/Instrument Tube Thickness (in.)	≥ 0.0165	≥ 0.015	≥ 0.0165	≥ 0.0150	≥ 0.0140	≥ 0.0140

Table 2.1-2 (page 3 of 5)
PWR FUEL ASSEMBLY CHARACTERISTICS (Note 1)

Fuel Assembly Array/ Class	**15x15G**	**15x15H**	**15x15I**	**16x16A**	**16x16B**	**16x16C**
Clad Material	SS	ZR	ZR	ZR	ZR	ZR
Design Initial U (kg/assy.)(Note 3)	≤ 420	≤ 495	≤ 495	≤ 448	≤ 427	≤ 426
Initial Enrichment (MPC-24, 24E, and 24EF without soluble boron credit)(wt % ^{235}U) (Note 7)	≤ 4.0 (24) ≤ 4.5 (24E/24EF)	≤ 3.8 (24) ≤ 4.2 (24E/24EF)	N/A (Note 9)	≤ 4.6 (24) ≤ 5.0 (24E/24EF)	≤ 4.6 (24) ≤ 5.0 (24E/24EF)	≤ 4.6 (24) ≤ 5.0 (24E/24EF)
Initial Enrichment (MPC-24, 24E, 24EF, 32, or 32F with soluble boron credit - see Note 5) (wt % ^{235}U)	≤ 5.0	≤ 5.0	≤ 5.0 (Note 9)	≤ 5.0	≤ 5.0	≤ 5.0
No. of Fuel Rod Locations (Note 11)	204	208	216	236	236	235
Fuel Rod Clad O.D. (in.)	≥ 0.422	≥ 0.414	≥ 0.413	≥ 0.382	≥ 0.374	≥ 0.374
Fuel Rod Clad I.D. (in.)	≤ 0.3890	≤ 0.3700	≤ 0.367	≤ 0.3350	≤ 0.3290	≤ 0.3290
Fuel Pellet Dia. (in.) (Note 8)	≤ 0.3825	≤ 0.3622	≤ 0.360	≤ 0.3255	≤ 0.3225	≤ 0.3225
Fuel Rod Pitch (in.)	≤ 0.563	≤ 0.568	≤ 0.550	≤ 0.506	≤ 0.506	≤ 0.485
Active Fuel Length (in.)	≤ 144	≤ 150	≤ 150	≤ 150	≤ 150	≤ 150
No. of Guide and/or Instrument Tubes	21	17	9 (Note 10)	5 (Note 4)	5 (Note 4)	21
Guide/Instrument Tube Thickness (in.)	≥ 0.0145	≥ 0.0140	≥ 0.0140	≥ 0.0350	≥ 0.0400	≥ 0.0157

Table 2.1-2 (page 4 of 5)
PWR FUEL ASSEMBLY CHARACTERISTICS (Note 1)

Fuel Assembly Array/ Class	**17x17A**	**17x17B**	**17x17C**
Clad Material	ZR	ZR	ZR
Design Initial U (kg/assy.)(Note 3)	≤ 433	≤ 474	≤ 480
Initial Enrichment (MPC-24, 24E, and 24EF without soluble boron credit)(wt % ^{235}U) (Note 7)	≤ 4.0 (24) ≤ 4.4 (24E/24EF)	≤ 4.0 (24) ≤ 4.4 (24E/24EF)	≤ 4.0 (24) ≤ 4.4 (24E/24EF)
Initial Enrichment (MPC-24, 24E, 24EF, 32, or 32F with soluble boron credit - see Note 5) (wt % ^{235}U)	≤ 5.0	≤ 5.0	≤ 5.0
No. of Fuel Rod Locations (Note 11)	264	264	264
Fuel Rod Clad O.D. (in.)	≥ 0.360	≥ 0.372	≥ 0.377
Fuel Rod Clad I.D. (in.)	≤ 0.3150	≤ 0.3310	≤ 0.3330
Fuel Pellet Dia. (in.) (Note 8)	≤ 0.3088	≤ 0.3232	≤ 0.3252
Fuel Rod Pitch (in.)	≤ 0.496	≤ 0.496	≤ 0.502
Active Fuel Length (in.)	≤ 150	≤ 150	≤ 150
No. of Guide and/or Instrument Tubes	25	25	25
Guide/Instrument Tube Thickness (in.)	≥ 0.016	≥ 0.014	≥ 0.020

Table 2.1-2 (page 5 of 5)
PWR FUEL ASSEMBLY CHARACTERISTICS

Notes:

1. All dimensions are design nominal values. Maximum and minimum dimensions are specified to bound variations in design nominal values among fuel assemblies within a given array/class.
2. Deleted.
3. Design initial uranium weight is the nominal uranium weight specified for each assembly by the fuel manufacturer or reactor user. For each PWR fuel assembly, the total uranium weight limit specified in this table may be increased up to 2.0 percent for comparison with users' fuel records.
4. Each guide tube replaces four fuel rods.
5. Soluble boron concentration per LCO 3.3.1.
6. This fuel assembly array/class includes only the Indian Point Unit 1 fuel assembly. This fuel assembly has two pitches in different sectors of the assembly. These pitches are 0.441 inches and 0.453 inches.
7. For those MPCs loaded with both INTACT FUEL ASSEMBLIES and DAMAGED FUEL ASSEMBLIES or FUEL DEBRIS, the maximum initial enrichment of the INTACT FUEL ASSEMBLIES, DAMAGED FUEL ASSEMBLIES and FUEL DEBRIS is 4.0 wt.% ^{235}U.
8. Annular fuel pellets are allowed in the top and bottom 12" of the active fuel length.
9. This fuel assembly array/class can only be loaded in MPC-32.
10. One Instrument Tube and eight Guide Bars (Solid ZR).
11. Any number of fuel rods in an assembly can be replaced by irradiated or unirradiated Steel or Zirconia rods. If the rods are irradiated, the site specific dose and dose rate analyses performed under 10 CFR 72.212 should include considerations for the presence of such rods.

Table 2.1-3 (page 1 of 6)
BWR FUEL ASSEMBLY CHARACTERISTICS (Note 1)

Fuel Assembly Array/Class	**6x6A**	**6x6B**	**6x6C**	**7x7A**	**7x7B**	**8x8A**
Clad Material	ZR	ZR	ZR	ZR	ZR	ZR
Design Initial U (kg/assy.) (Note 3)	≤ 110	≤ 110	≤ 110	≤ 100	≤ 198	≤ 120
Maximum PLANAR-AVERAGE INITIAL ENRICHMENT (MPC-68, 68F, and 68FF) (wt.% ^{235}U) (Note 14)	≤ 2.7	≤ 2.7 for the UO_2 rods. See Note 4 for MOX rods	≤ 2.7	≤ 2.7	≤ 4.2	≤ 2.7
Maximum PLANAR-AVERAGE INITIAL ENRICHMENT (MPC-68M) (wt.% ^{235}U) (Note 16, 19)	Note 18	Note 18	Note 18	Note 18	≤ 4.8	Note 18
Initial Maximum Rod Enrichment (wt.% ^{235}U)	≤ 4.0	≤ 4.0	≤ 4.0	≤ 5.5	≤ 5.0	≤ 4.0
No. of Fuel Rod Locations (Note 20)	35 or 36	35 or 36 (up to 9 MOX rods)	36	49	49	63 or 64
Fuel Rod Clad O.D. (in.)	≥ 0.5550	≥ 0.5625	≥ 0.5630	≥ 0.4860	≥ 0.5630	≥ 0.4120
Fuel Rod Clad I.D. (in.)	≤ 0.5105	≤ 0.4945	≤ 0.4990	≤ 0.4204	≤ 0.4990	≤ 0.3620
Fuel Pellet Dia. (in.)	≤ 0.4980	≤ 0.4820	≤ 0.4880	≤ 0.4110	≤ 0.4910	≤ 0.3580
Fuel Rod Pitch (in.)	≤ 0.710	≤ 0.710	≤ 0.740	≤ 0.631	≤ 0.738	≤ 0.523
Active Fuel Length (in.)	≤ 120	≤ 120	≤ 77.5	≤ 80	≤ 150	≤ 120
No. of Water Rods (Note 11)	1 or 0	1 or 0	0	0	0	1 or 0
Water Rod Thickness (in.)	> 0	> 0	N/A	N/A	N/A	≥ 0
Channel Thickness (in.)	≤ 0.060	≤ 0.060	≤ 0.060	≤ 0.060	≤ 0.120	≤ 0.100

Table 2.1-3 (2 of 6)
BWR FUEL ASSEMBLY CHARACTERISTICS (Note 1)

Fuel Assembly Array/Class	**8x8B**	**8x8C**	**8x8D**	**8x8E**	**8x8F**	**9x9A**
Clad Material	ZR	ZR	ZR	ZR	ZR	ZR
Design Initial U (kg/assy.) (Note 3)	≤ 192	≤ 190	≤ 190	< 190	≤ 191	≤ 180
Maximum PLANAR-AVERAGE INITIAL ENRICHMENT (MPC-68, 68F, and 68FF) (wt.% ^{235}U) (Note 14)	≤ 4.2	≤ 4.2	≤ 4.2	≤ 4.2	≤ 4.0	≤ 4.2
Maximum PLANAR-AVERAGE INITIAL ENRICHMENT (MPC-68M) (wt.% ^{235}U) (Note 16, 19)	≤ 4.8	≤ 4.8	≤ 4.8	≤ 4.8	≤ 4.5 (Note 15)	≤ 4.8
Initial Maximum Rod Enrichment (wt.% ^{235}U)	≤ 5.0	≤ 5.0	≤ 5.0	≤ 5.0	≤ 5.0	≤ 5.0
No. of Fuel Rod Locations (Note 20)	63 or 64	62	60 or 61	59	64	74/66 (Note 5)
Fuel Rod Clad O.D. (in.)	≥ 0.4840	≥ 0.4830	≥ 0.4830	≥ 0.4930	≥ 0.4576	≥ 0.4400
Fuel Rod Clad I.D. (in.)	≤ 0.4295	≤ 0.4250	≤ 0.4230	≤ 0.4250	≤ 0.3996	≤ 0.3840
Fuel Pellet Dia. (in.)	≤ 0.4195	≤ 0.4160	≤ 0.4140	≤ 0.4160	≤ 0.3913	≤ 0.3760
Fuel Rod Pitch (in.)	≤ 0.642	≤ 0.641	≤ 0.640	≤ 0.640	≤ 0.609	≤ 0.566
Design Active Fuel Length (in.)	≤ 150	≤ 150	≤ 150	≤ 150	≤ 150	≤ 150
No. of Water Rods (Note 11)	1 or 0	2	1 - 4 (Note 7)	5	N/A (Note 12)	2
Water Rod Thickness (in.)	≥ 0.034	> 0.00	> 0.00	≥ 0.034	≥ 0.0315	> 0.00
Channel Thickness (in.)	≤ 0.120	≤ 0.120	≤ 0.120	≤ 0.100	≤ 0.055	≤ 0.120

Table 2.1-3 (page 3 of 6)
BWR FUEL ASSEMBLY CHARACTERISTICS (Note 1)

Fuel Assembly Array/Class	**9x9B**	**9x9C**	**9x9D**	**9x9E (Note 13)**	**9x9F (Note 13)**	**9x9G**
Clad Material	ZR	ZR	ZR	ZR	ZR	ZR
Design Initial U (kg/assy.)(Note 3)	≤ 180	≤ 182	≤ 182	≤ 183	≤ 183	≤ 164
Maximum PLANAR-AVERAGE INITIAL ENRICHMENT (MPC-68, 68F, and 68FF) (wt.% ^{235}U) (Note 14)	≤ 4.2	≤ 4.2	≤ 4.2	≤ 4.0	≤ 4.0	≤ 4.2
Maximum PLANAR-AVERAGE INITIAL ENRICHMENT (MPC-68M) (wt.% ^{235}U) (Note 16, 19)	≤ 4.8	≤ 4.8	≤ 4.8	≤ 4.5 (Note 15)	≤ 4.5 (Note 15)	≤ 4.8
Initial Maximum Rod Enrichment (wt.% ^{235}U)	≤ 5.0	≤ 5.0	≤ 5.0	≤ 5.0	≤ 5.0	≤ 5.0
No. of Fuel Rod Locations (Note 20)	72	80	79	76	76	72
Fuel Rod Clad O.D. (in.)	≥ 0.4330	≥ 0.4230	≥ 0.4240	≥ 0.4170	≥ 0.4430	≥ 0.4240
Fuel Rod Clad I.D. (in.)	≤ 0.3810	≤ 0.3640	≤ 0.3640	≤ 0.3640	≤ 0.3860	≤ 0.3640
Fuel Pellet Dia. (in.)	≤ 0.3740	≤ 0.3565	≤ 0.3565	≤ 0.3530	≤ 0.3745	≤ 0.3565
Fuel Rod Pitch (in.)	≤ 0.572	≤ 0.572	≤ 0.572	≤ 0.572	≤ 0.572	≤ 0.572
Design Active Fuel Length (in.)	≤ 150	≤ 150	≤ 150	≤ 150	≤ 150	≤ 150
No. of Water Rods (Note 11)	1 (Note 6)	1	2	5	5	1 (Note 6)
Water Rod Thickness (in.)	> 0.00	≥ 0.020	≥ 0.0300	≥ 0.0120	≥ 0.0120	≥ 0.0320
Channel Thickness (in.)	≤ 0.120	≤ 0.100	≤ 0.100	≤ 0.120	≤ 0.120	≤ 0.120

Table 2.1-3 (page 4 of 6)
BWR FUEL ASSEMBLY CHARACTERISTICS (Note 1)

Fuel Assembly Array/Class	**10x10A**	**10x10B**	**10x10C**	**10x10D**	**10x10E**	**10x10F**	**10x10G**
Clad Material	ZR	ZR	ZR	SS	SS	ZR	ZR
Design Initial U (kg/assy.) (Note 3)	≤ 188	≤ 188	≤ 179	≤ 125	≤ 125	≤ 192	≤ 188
Maximum PLANAR-AVERAGE INITIAL ENRICHMENT(MPC-68, 68F, and 68FF) (wt.% ^{235}U) (Note 14)	≤ 4.2	≤ 4.2	≤ 4.2	≤ 4.0	≤ 4.0	Note 17	Note 17
Maximum PLANAR-AVERAGE INITIAL ENRICHMENT (MPC-68M) (wt.% ^{235}U) (Note 16, 19)	≤ 4.8	≤ 4.8	≤ 4.8	Note 18	Note 18	≤ 4.7 (Note 15)	≤ 4.75 (Note 15)
Initial Maximum Rod Enrichment (wt.% ^{235}U)	≤ 5.0	≤ 5.0	≤ 5.0	≤ 5.0	≤ 5.0	≤ 5.0	≤ 5.0
No. of Fuel Rod Locations (Note 20)	92/78 (Note 8)	91/83 (Note 9)	96	100	96	92/78 (Note 8)	96/84
Fuel Rod Clad O.D. (in.)	≥ 0.4040	≥ 0.3957	≥ 0.3780	≥ 0.3960	≥ 0.3940	≥ 0.4035	≥ 0.387
Fuel Rod Clad I.D. (in.)	≤ 0.3520	≤ 0.3480	≤ 0.3294	≤ 0.3560	≤ 0.3500	≤ 0.3570	≤ 0.340
Fuel Pellet Dia. (in.)	≤ 0.3455	≤ 0.3420	≤ 0.3224	≤ 0.3500	≤ 0.3430	≤ 0.3500	≤ 0.334
Fuel Rod Pitch (in.)	≤ 0.510	≤ 0.510	≤ 0.488	≤ 0.565	≤ 0.557	≤ 0.510	≤ 0.512
Design Active Fuel Length (in.)	≤ 150	≤ 150	≤ 150	≤ 83	≤ 83	≤ 150	≤ 150
No. of Water Rods (Note 11)	2	1 (Note 6)	5 (Note 10)	0	4	2	5 (Note 10)
Water Rod Thickness (in.)	≥ 0.030	> 0.00	≥ 0.031	N/A	≥ 0.022	≥ 0.030	≥ 0.031
Channel Thickness (in.)	≤ 0.120	≤ 0.120	≤ 0.055	≤ 0.080	≤ 0.080	≤ 0.120	≤ 0.060

Table 2.1-3 (page 5 of 6)
BWR FUEL ASSEMBLY CHARACTERISTICS

Notes:

1. All dimensions are design nominal values. Maximum and minimum dimensions are specified to bound variations in design nominal values among fuel assemblies within a given array/class.
2. Deleted.
3. Design initial uranium weight is the nominal uranium weight specified for each assembly by the fuel manufacturer or reactor user. For each BWR fuel assembly, the total uranium weight limit specified in this table may be increased up to 1.5 percent for comparison with users' fuel records.
4. ≤ 0.635 wt. % 235U and ≤ 1.578 wt. % total fissile plutonium (239Pu and 241Pu), (wt. % of total fuel weight, i.e., UO2 plus PuO2).
5. This assembly class contains 74 total rods; 66 full length rods and 8 partial length rods.
6. Square, replacing nine fuel rods.
7. Variable.
8. This assembly contains 92 total fuel rods; 78 full length rods and 14 partial length rods.
9. This assembly class contains 91 total fuel rods; 83 full length rods and 8 partial length rods.
10. One diamond-shaped water rod replacing the four center fuel rods and four rectangular water rods dividing the assembly into four quadrants.
11. These rods may also be sealed at both ends and contain Zr material in lieu of water.
12. This assembly is known as "QUAD+." It has four rectangular water cross segments dividing the assembly into four quadrants.
13. For the SPC 9x9-5 fuel assembly, each fuel rod must meet either the 9x9E or the 9x9F set of limits for clad O.D., clad I.D., and pellet diameter.
14. For MPC-68, 68F, and 68FF loaded with both INTACT FUEL ASSEMBLIES and DAMAGED FUEL ASSEMBLIES or FUEL DEBRIS, the maximum PLANAR AVERAGE INITIAL ENRICHMENT for the INTACT FUEL ASSEMBLIES is limited to 3.7 wt.% ^{235}U, as applicable.
15. Fuel assemblies classified as damaged fuel assemblies are limited to 4.6 wt.% ^{235}U for the 10x10F and 10x10G arrays/classes and 4.0 wt.% ^{235}U for the 8x8F, 9x9E and 9x9F arrays/classes.

Table 2.1-3 (page 6 of 6)
BWR FUEL ASSEMBLY CHARACTERISTICS

16. For MPC-68M loaded with both UNDAMAGED FUEL ASSEMBLIES and DAMAGED FUEL ASSEMBLIES or FUEL DEBRIS, the maximum PLANAR AVERAGE INITIAL ENRICHMENT for the UNDAMAGED FUEL ASSEMBLIES is limited to the enrichment limit of the damaged assembly.
17. This fuel assembly array/class is not allowable contents in MPC-68, 68F, or 68FF.
18. This fuel assembly array/class is not allowable contents in MPC-68M.
19. In accordance with the definition of UNDAMAGED FUEL ASSEMBLY, certain assemblies may be limited to up to 3.3 wt.% U-235. When loading these fuel assemblies, all other undamaged fuel assemblies in the MPC are limited to enrichments as specified in this table.
20. Any number of fuel rods in an assembly can be replaced by irradiated or unirradiated Steel or Zirconia rods. If the rods are irradiated, the site specific dose and dose rate analyses performed under 10 CFR 72.212 should include considerations for the presence of such rods.

Table 2.1-8

NON-FUEL HARDWARE COOLING AND AVERAGE BURNUP (Notes 1, 2, 3, and 7)

Post-irradiation Cooling Time (years)	**NSA with NFH INSERTS** (Note 4) **BURNUP (MWD/MTU)**	**NSA without NFH, GUIDE TUBE HARDWARE, or CONTROL COMPONENT** (Note 5) **BURNUP (MWD/MTU)**	**APSR BURNUP (MWD/MTU)**
≥ 3	≤ 24,635	NA (Note 6)	NA
≥ 4	≤ 30,000	NA	NA
≥ 5	≤ 36,748	≤ 630,000	≤ 45,000
≥ 6	≤ 44,102	-	≤ 54,500
≥ 7	≤ 52,900	-	≤ 68,000
≥ 8	≤ 60,000	-	≤ 83,000
≥ 9	≤ 79,784	-	≤ 111,000
≥ 10	≤ 101,826	-	≤ 180,000
≥ 11	≤ 141,982	-	≤ 630,000
≥ 12	≤ 360,000	-	-

Notes:
1. Burnups for NON-FUEL HARDWARE are to be determined based on the burnup and uranium mass of the fuel assemblies in which the component was inserted during reactor operation.
2. Linear interpolation between points is permitted, except that APSR burnups > 180,000 MWD/MTU and ≤ 630,000 MWD/MTU must be cooled ≥ 11 years.
3. Applicable to uniform loading and regionalized loading.
4. Includes Burnable Poison Rod Assemblies (BPRAs), Wet Annular Burnable Absorbers (WABAs), vibration suppressor inserts and Neutron Source Assemblies (NSAs) in combination with other control components (i.e. BPRAs, TPDs, and/or RCCAs).
5. Includes Thimble Plug Devices (TPDs), water displacement guide tube plugs, orifice rod assemblies, Control Rod Assemblies (CRAs), Control Element Assemblies (CEAs), Rod Cluster Control Assemblies (RCCAs) and NSAs without other forms of control components.
6. NA means not authorized for loading at this cooling time.
7. Non-fuel hardware burnup and cooling times are not applicable to ITTRs since they are installed post irradiation.

2.4 Decay Heat, Burnup, and Cooling Time Limits for ZR-Clad Fuel

This section provides the limits on ZR-clad fuel assembly decay heat, burnup, and cooling time for storage in the HI-STORM 100 System. The method to calculate the limits and verify compliance, including examples, is provided in Chapter 12 of the HI-STORM 100 FSAR.

2.4.1 Uniform Fuel Loading Decay Heat Limits for ZR-clad fuel

Table 2.4-1 provides the maximum allowable decay heat per fuel storage location for ZR-clad fuel in uniform fuel loading for each MPC model.

Table 2.4-1
Maximum Allowable Decay Heat per Fuel Storage Location
(Uniform Loading, ZR-Clad)

MPC Model	**Decay Heat per Fuel Storage Location (kW)**	
	Intact or Undamaged Fuel Assemblies	Damaged Fuel Assemblies and Fuel Debris
MPC-24	≤ 1.416	Not Permitted
MPC-24E/24EF	≤ 1.416	≤ 1.114
MPC-32/32F	≤ 1.062	≤ 0.718
MPC-68/68FF/68M	≤ 0.500	≤ 0.393

2.4.2 Regionalized Fuel Loading Decay Heat Limits for ZR-Clad Fuel (Intact or Undamaged Fuel only)

The maximum allowable decay heat per fuel storage location for fuel in regionalized loading is determined using the following equations:

$Q(X) = 2 \times Q_0 / (1 + X^y)$

$y = 0.23 / X^{0.1}$

$q_2 = Q(X) / (n_1 \times X + n_2)$

$q_1 = q_2 \times X$

Where:

Q_0 = Maximum uniform storage MPC decay heat (34 kW)

X = Inner region to outer region assembly decay heat ratio ($0.5 \leq X \leq 3$)

n_1 = Number of storage locations in inner region from Table 2.4-2.

n_2 = Number of storage locations in outer region from Table 2.4-2.

Table 2.4-2
Fuel Storage Regions per MPC

MPC Model	Number of Storage Locations in Inner Region (Region 1)	Number of Storage Locations in Outer Region (Region 2)
MPC-24 and MPC-24E/EF	12	12
MPC- 32/32F	12	20
MPC-68/68FF/68M	32	36

2.4.3 Burnup Limits as a Function of Cooling Time for ZR-Clad Fuel

The maximum allowable fuel assembly average burnup varies with the following parameters:

- Minimum fuel assembly cooling time
- Maximum fuel assembly decay heat
- Minimum fuel assembly average enrichment

The maximum allowable ZR-clad fuel assembly average burnup for a given MINIMUM ENRICHMENT is calculated as described below for minimum cooling times between 3 and 20 years using the maximum permissible decay heat determined in Section 2.4.1 or 2.4.2. Different fuel assembly average burnup limits may be calculated for different minimum enrichments (by individual fuel assembly) for use in choosing the fuel assemblies to be loaded into a given MPC.

2.4.3.1 Choose a fuel assembly minimum enrichment, E_{235}.

2.4.3.2 Calculate the maximum allowable fuel assembly average burnup for a minimum cooling time between 3 and 20 years using the equation below.

$$Bu = (A \times q) + (B \times q^2) + (C \times q^3) + [D \times (E_{235})^2] + (E \times q \times E_{235}) + (F \times q^2 \times E_{235}) + G$$

Where:

Bu = Maximum allowable average burnup per fuel assembly (MWD/MTU)

q = Maximum allowable decay heat per fuel storage location determined in Section 2.4.1 or 2.4.2 (kW)

E_{235} = Minimum fuel assembly average enrichment (wt. % ^{235}U) (e.g., for 4.05 wt.%, use 4.05)

A through G = Coefficients from Tables 2.4-3 and 2.4-4 for the applicable fuel assembly array/class and minimum cooling time

2.4.3.3 Calculated burnup limits shall be rounded down to the nearest integer.

2.4.3.4 Calculated burnup limits greater than 68,200 MWD/MTU for PWR fuel and 65,000 MWD/MTU for BWR must be reduced to be equal to these values.

2.4.3.5 Linear interpolation of calculated burnups between cooling times for a given fuel assembly maximum decay heat and minimum enrichment is permitted. For example, the allowable burnup for a cooling time of 4.5 years may be interpolated between those burnups calculated for 4 year and 5 years.

2.4.3.6 Each ZR-clad fuel assembly to be stored must have a MINIMUM ENRICHMENT greater than or equal to the value used in Step 2.4.3.2.

2.4.4 When complying with the maximum fuel storage location decay heat limits, users must account for the decay heat from both the fuel assembly and any NON-FUEL HARDWARE, as applicable for the particular fuel storage location, to ensure the decay heat emitted by all contents in a storage location does not exceed the limit.

Table 2.4-3 (Page 1 of 8)

PWR Fuel Assembly Cooling Time-Dependent Coefficients
(ZR-Clad Fuel)

Cooling Time (years)	Array/Class 14x14A						
	A	B	C	D	E	F	G
≥ 3	19311.5	275.367	-59.0252	-139.41	2851.12	-451.845	-615.413
≥ 4	33865.9	-5473.03	851.121	-132.739	3408.58	-656.479	-609.523
≥ 5	46686.2	-13226.9	2588.39	-150.149	3871.87	-806.533	-90.2065
≥ 6	56328.9	-20443.2	4547.38	-176.815	4299.19	-927.358	603.192
≥ 7	64136	-27137.5	6628.18	-200.933	4669.22	-1018.94	797.162
≥ 8	71744.1	-34290.3	9036.9	-214.249	4886.95	-1037.59	508.703
≥ 9	77262	-39724.2	11061	-228.2	5141.35	-1102.05	338.294
≥ 10	82939.8	-45575.6	13320.2	-233.691	5266.25	-1095.94	-73.3159
≥ 11	86541	-49289.6	14921.7	-242.092	5444.54	-1141.6	-83.0603
≥ 12	91383	-54456.7	17107	-242.881	5528.7	-1149.2	-547.579
≥ 13	95877.6	-59404.7	19268	-240.36	5524.35	-1094.72	-933.64
≥ 14	97648.3	-61091.6	20261.7	-244.234	5654.56	-1151.47	-749.836
≥ 15	102533	-66651.5	22799.7	-240.858	5647.05	-1120.32	-1293.34
≥ 16	106216	-70753.8	24830.1	-237.04	5647.63	-1099.12	-1583.89
≥ 17	109863	-75005	27038	-234.299	5652.45	-1080.98	-1862.07
≥ 18	111460	-76482.3	28076.5	-234.426	5703.52	-1104.39	-1695.77
≥ 19	114916	-80339.6	30126.5	-229.73	5663.21	-1065.48	-1941.83
≥ 20	119592	-86161.5	33258.2	-227.256	5700.49	-1100.21	-2474.01

Table 2.4-3 (Page 2 of 8)

PWR Fuel Assembly Cooling Time-Dependent Coefficients
(ZR-Clad Fuel)

Cooling Time (years)	Array/Class 14x14B						
	A	B	C	D	E	F	G
≥ 3	18036.1	63.7639	-24.7251	-130.732	2449.87	-347.748	-858.192
≥ 4	30303.4	-4304.2	598.79	-118.757	2853.18	-486.453	-459.902
≥ 5	40779.6	-9922.93	1722.83	-138.174	3255.69	-608.267	245.251
≥ 6	48806.7	-15248.9	3021.47	-158.69	3570.24	-689.876	833.917
≥ 7	55070.5	-19934.6	4325.62	-179.964	3870.33	-765.849	1203.89
≥ 8	60619.6	-24346	5649.29	-189.701	4042.23	-795.324	1158.12
≥ 9	64605.7	-27677.1	6778.12	-205.459	4292.35	-877.966	1169.88
≥ 10	69083.8	-31509.4	8072.42	-206.157	4358.01	-875.041	856.449
≥ 11	72663.2	-34663.9	9228.96	-209.199	4442.68	-889.512	671.567
≥ 12	74808.9	-36367	9948.88	-214.344	4571.29	-942.418	765.261
≥ 13	78340.3	-39541.1	11173.8	-212.8	4615.06	-957.833	410.807
≥ 14	81274.8	-42172.3	12259.9	-209.758	4626.13	-958.016	190.59
≥ 15	83961.4	-44624.5	13329.1	-207.697	4632.16	-952.876	20.8575
≥ 16	84968.5	-44982.1	13615.8	-207.171	4683.41	-992.162	247.54
≥ 17	87721.6	-47543.1	14781.4	-203.373	4674.3	-988.577	37.9689
≥ 18	90562.9	-50100.4	15940.4	-198.649	4651.64	-982.459	-247.421
≥ 19	93011.6	-52316.6	17049.9	-194.964	4644.76	-994.63	-413.021
≥ 20	95567.8	-54566.6	18124	-190.22	4593.92	-963.412	-551.983

Table 2.4-3 (Page 3 of 8)

PWR Fuel Assembly Cooling Time-Dependent Coefficients
(ZR-Clad Fuel)

Cooling Time (years)	Array/Class 14x14C						
	A	B	C	D	E	F	G
≥ 3	18263.7	174.161	-57.6694	-138.112	2539.74	-369.764	-1372.33
≥ 4	30514.5	-4291.52	562.37	-124.944	2869.17	-481.139	-889.883
≥ 5	41338	-10325.7	1752.96	-141.247	3146.48	-535.709	-248.078
≥ 6	48969.7	-15421.3	2966.33	-163.574	3429.74	-587.225	429.331
≥ 7	55384.6	-20228.9	4261.47	-180.846	3654.55	-617.255	599.251
≥ 8	60240.2	-24093.2	5418.86	-199.974	3893.72	-663.995	693.934
≥ 9	64729	-27745.7	6545.45	-205.385	3986.06	-650.124	512.528
≥ 10	68413.7	-30942.2	7651.29	-216.408	4174.71	-702.931	380.431
≥ 11	71870.6	-33906.7	8692.81	-218.813	4248.28	-704.458	160.645
≥ 12	74918.4	-36522	9660.01	-218.248	4283.68	-696.498	-29.0682
≥ 13	77348.3	-38613.7	10501.8	-220.644	4348.23	-702.266	-118.646
≥ 14	79817.1	-40661.8	11331.2	-218.711	4382.32	-710.578	-236.123
≥ 15	82354.2	-42858.3	12257.3	-215.835	4405.89	-718.805	-431.051
≥ 16	84787.2	-44994.5	13185.9	-213.386	4410.99	-711.437	-572.104
≥ 17	87084.6	-46866.1	14004.8	-206.788	4360.3	-679.542	-724.721
≥ 18	88083.1	-47387.1	14393.4	-208.681	4420.85	-709.311	-534.454
≥ 19	90783.6	-49760.6	15462.7	-203.649	4403.3	-705.741	-773.066
≥ 20	93212	-51753.3	16401.5	-197.232	4361.65	-692.925	-964.628

Table 2.4-3 (Page 4 of 8)

PWR Fuel Assembly Cooling Time-Dependent Coefficients
(ZR-Clad Fuel)

Cooling Time (years)	Array/Class 15x15A/B/C						
	A	B	C	D	E	F	G
≥ 3	15037.3	108.689	-18.8378	-127.422	2050.02	-242.828	-580.66
≥ 4	25506.6	-2994.03	356.834	-116.45	2430.25	-350.901	-356.378
≥ 5	34788.8	-7173.07	1065.9	-124.785	2712.23	-424.681	267.705
≥ 6	41948.6	-11225.3	1912.12	-145.727	3003.29	-489.538	852.112
≥ 7	47524.9	-14770.9	2755.16	-165.889	3253.9	-542.7	1146.96
≥ 8	52596.9	-18348.8	3699.72	-177.17	3415.69	-567.012	1021.41
≥ 9	56055.4	-20837.1	4430.93	-192.168	3625.93	-623.325	1058.61
≥ 10	59611.3	-23402.1	5179.52	-195.105	3699.18	-626.448	868.517
≥ 11	62765.3	-25766.5	5924.71	-195.57	3749.91	-627.139	667.124
≥ 12	65664.4	-28004.8	6670.75	-195.08	3788.33	-628.904	410.783
≥ 13	67281.7	-29116.7	7120.59	-202.817	3929.38	-688.738	492.309
≥ 14	69961.4	-31158.6	7834.02	-197.988	3917.29	-677.565	266.561
≥ 15	72146	-32795.7	8453.67	-195.083	3931.47	-681.037	99.0606
≥ 16	74142.6	-34244.8	9023.57	-190.645	3905.54	-663.682	10.8885
≥ 17	76411.4	-36026.3	9729.98	-188.874	3911.21	-663.449	-151.805
≥ 18	77091	-36088	9884.09	-188.554	3965.08	-708.55	59.3839
≥ 19	79194.5	-37566.4	10477.5	-181.656	3906.93	-682.4	-117.952
≥ 20	81600.4	-39464.5	11281.9	-175.182	3869.49	-677.179	-367.705

Table 2.4-3 (Page 5 of 8)

PWR Fuel Assembly Cooling Time-Dependent Coefficients
(ZR-Clad Fuel)

Cooling Time (years)	Array/Class 15x15D/E/F/H/I						
	A	B	C	D	E	F	G
≥ 3	14376.7	102.205	-20.6279	-126.017	1903.36	-210.883	-493.065
≥ 4	24351.4	-2686.57	297.975	-110.819	2233.78	-301.615	-152.713
≥ 5	33518.4	-6711.35	958.544	-122.85	2522.7	-371.286	392.608
≥ 6	40377	-10472.4	1718.53	-144.535	2793.29	-426.436	951.528
≥ 7	46105.8	-13996.2	2515.32	-157.827	2962.46	-445.314	1100.56
≥ 8	50219.7	-16677.7	3198.3	-175.057	3176.74	-492.727	1223.62
≥ 9	54281.2	-19555.6	3983.47	-181.703	3279.03	-499.997	1034.55
≥ 10	56761.6	-21287.3	4525.98	-195.045	3470.41	-559.074	1103.3
≥ 11	59820	-23445.2	5165.43	-194.997	3518.23	-561.422	862.68
≥ 12	62287.2	-25164.6	5709.9	-194.771	3552.69	-561.466	680.488
≥ 13	64799	-27023.7	6335.16	-192.121	3570.41	-561.326	469.583
≥ 14	66938.7	-28593.1	6892.63	-194.226	3632.92	-583.997	319.867
≥ 15	68116.5	-29148.6	7140.09	-192.545	3670.39	-607.278	395.344
≥ 16	70154.9	-30570.1	7662.91	-187.366	3649.14	-597.205	232.318
≥ 17	72042.5	-31867.6	8169.01	-183.453	3646.92	-603.907	96.0388
≥ 18	73719.8	-32926.1	8596.12	-177.896	3614.57	-592.868	46.6774
≥ 19	75183.1	-33727.4	8949.64	-172.386	3581.13	-586.347	3.57256
≥ 20	77306.1	-35449	9690.02	-173.784	3636.87	-626.321	-205.513

Table 2.4-3 (Page 6 of 8)

PWR Fuel Assembly Cooling Time-Dependent Coefficients
(ZR-Clad Fuel)

Cooling Time (years)	Array/Class 16X16A						
	A	B	C	D	E	F	G
≥ 3	16226.8	143.714	-32.4809	-136.707	2255.33	-291.683	-699.947
≥ 4	27844.2	-3590.69	444.838	-124.301	2644.09	-411.598	-381.106
≥ 5	38191.5	-8678.48	1361.58	-132.855	2910.45	-473.183	224.473
≥ 6	46382.2	-13819.6	2511.32	-158.262	3216.92	-532.337	706.656
≥ 7	52692.3	-18289	3657.18	-179.765	3488.3	-583.133	908.839
≥ 8	57758.7	-22133.7	4736.88	-199.014	3717.42	-618.83	944.903
≥ 9	62363.3	-25798.7	5841.18	-207.025	3844.38	-625.741	734.928
≥ 10	66659.1	-29416.3	6993.31	-216.458	3981.97	-642.641	389.366
≥ 11	69262.7	-31452.7	7724.66	-220.836	4107.55	-681.043	407.121
≥ 12	72631.5	-34291.9	8704.8	-219.929	4131.5	-662.513	100.093
≥ 13	75375.3	-36589.3	9555.88	-217.994	4143.15	-644.014	-62.3294
≥ 14	78178.7	-39097.1	10532	-221.923	4226.28	-667.012	-317.743
≥ 15	79706.3	-40104	10993.3	-218.751	4242.12	-670.665	-205.579
≥ 16	82392.6	-42418.9	11940.7	-216.278	4274.09	-689.236	-479.752
≥ 17	84521.8	-44150.5	12683.3	-212.056	4245.99	-665.418	-558.901
≥ 18	86777.1	-45984.8	13479	-204.867	4180.8	-621.805	-716.366
≥ 19	89179.7	-48109.8	14434.5	-206.484	4230.03	-648.557	-902.1
≥ 20	90141.7	-48401.4	14702.6	-203.284	4245.54	-670.655	-734.604

Table 2.4-3 (Page 7 of 8)

PWR Fuel Assembly Cooling Time-Dependent Coefficients
(ZR-Clad Fuel)

Cooling Time (years)	Array/Class 17x17A/16x16B/C						
	A	B	C	D	E	F	G
≥ 3	15985.1	3.53963	-9.04955	-128.835	2149.5	-260.415	-262.997
≥ 4	27532.9	-3494.41	428.199	-119.504	2603.01	-390.91	-140.319
≥ 5	38481.2	-8870.98	1411.03	-139.279	3008.46	-492.881	388.377
≥ 6	47410.9	-14479.6	2679.08	-162.13	3335.48	-557.777	702.164
≥ 7	54596.8	-19703.2	4043.46	-181.339	3586.06	-587.634	804.05
≥ 8	60146.1	-24003.4	5271.54	-201.262	3830.32	-621.706	848.454
≥ 9	65006.3	-27951	6479.04	-210.753	3977.69	-627.805	615.84
≥ 10	69216	-31614.7	7712.58	-222.423	4173.4	-672.33	387.879
≥ 11	73001.3	-34871.1	8824.44	-225.128	4238.28	-657.259	101.654
≥ 12	76326.1	-37795.9	9887.35	-226.731	4298.11	-647.55	-122.236
≥ 13	78859.9	-40058.9	10797.1	-231.798	4402.14	-669.982	-203.383
≥ 14	82201.3	-43032.5	11934.1	-228.162	4417.99	-661.61	-561.969
≥ 15	84950	-45544.6	12972.4	-225.369	4417.84	-637.422	-771.254
≥ 16	87511.8	-47720	13857.7	-219.255	4365.24	-585.655	-907.775
≥ 17	90496.4	-50728.9	15186	-223.019	4446.51	-613.378	-1200.94
≥ 18	91392.5	-51002.4	15461.4	-220.272	4475.28	-636.398	-1003.81
≥ 19	94343.9	-53670.8	16631.6	-214.045	4441.31	-616.201	-1310.01
≥ 20	96562.9	-55591.2	17553.4	-209.917	4397.67	-573.199	-1380.64

Table 2.4-3 (Page 8 of 8)

PWR Fuel Assembly Cooling Time-Dependent Coefficients
(ZR-Clad Fuel)

Cooling Time (years)	Array/Class 17x17B/C						
	A	B	C	D	E	F	G
≥ 3	14738	47.5402	-13.8187	-127.895	1946.58	-219.289	-389.029
≥ 4	25285.2	-3011.92	350.116	-115.75	2316.89	-319.23	-220.413
≥ 5	34589.6	-7130.34	1037.26	-128.673	2627.27	-394.58	459.642
≥ 6	42056.2	-11353.7	1908.68	-150.234	2897.38	-444.316	923.971
≥ 7	47977.6	-15204.8	2827.4	-173.349	3178.25	-504.16	1138.82
≥ 8	52924	-18547.6	3671.08	-183.025	3298.64	-501.278	1064.68
≥ 9	56465.5	-21139.4	4435.67	-200.386	3538	-569.712	1078.78
≥ 10	60190.9	-23872.7	5224.31	-203.233	3602.88	-562.312	805.336
≥ 11	63482.1	-26431.1	6035.79	-205.096	3668.84	-566.889	536.011
≥ 12	66095	-28311.8	6637.72	-204.367	3692.68	-555.305	372.223
≥ 13	67757.4	-29474.4	7094.08	-211.649	3826.42	-606.886	437.412
≥ 14	70403.7	-31517.4	7807.15	-207.668	3828.69	-601.081	183.09
≥ 15	72506.5	-33036.1	8372.59	-203.428	3823.38	-594.995	47.5175
≥ 16	74625.2	-34620.5	8974.32	-199.003	3798.57	-573.098	-95.0221
≥ 17	76549	-35952.6	9498.14	-193.459	3766.52	-556.928	-190.662
≥ 18	77871.9	-36785.5	9916.91	-195.592	3837.65	-599.45	-152.261
≥ 19	79834.8	-38191.6	10501.9	-190.83	3812.46	-589.635	-286.847
≥ 20	81975.5	-39777.2	11174.5	-185.767	3795.78	-595.664	-475.978

Table 2.4-4 (Page 1 of 10)

BWR Fuel Assembly Cooling Time-Dependent Coefficients
(ZR-Clad Fuel)

Cooling Time (years)	Array/Class 7x7B & 10x10F						
	A	B	C	D	E	F	G
≥ 3	26409.1	28347.5	-16858	-147.076	5636.32	-1606.75	1177.88
≥ 4	61967.8	-6618.31	-4131.96	-113.949	6122.77	-2042.85	-96.7439
≥ 5	91601.1	-49298.3	17826.5	-132.045	6823.14	-2418.49	-185.189
≥ 6	111369	-80890.1	35713.8	-150.262	7288.51	-2471.1	86.6363
≥ 7	126904	-108669	53338.1	-167.764	7650.57	-2340.78	150.403
≥ 8	139181	-132294	69852.5	-187.317	8098.66	-2336.13	97.5285
≥ 9	150334	-154490	86148.1	-193.899	8232.84	-2040.37	-123.029
≥ 10	159897	-173614	100819	-194.156	8254.99	-1708.32	-373.605
≥ 11	166931	-186860	111502	-193.776	8251.55	-1393.91	-543.677
≥ 12	173691	-201687	125166	-202.578	8626.84	-1642.3	-650.814
≥ 13	180312	-215406	137518	-201.041	8642.19	-1469.45	-810.024
≥ 14	185927	-227005	148721	-197.938	8607.6	-1225.95	-892.876
≥ 15	191151	-236120	156781	-191.625	8451.86	-846.27	-1019.4
≥ 16	195761	-244598	165372	-187.043	8359.19	-572.561	-1068.19
≥ 17	200791	-256573	179816	-197.26	8914.28	-1393.37	-1218.63
≥ 18	206068	-266136	188841	-187.191	8569.56	-730.898	-1363.79
≥ 19	210187	-273609	197794	-182.151	8488.23	-584.727	-1335.59
≥ 20	213731	-278120	203074	-175.864	8395.63	-457.304	-1364.38

Table 2.4-4 (Page 2 of 10)

BWR Fuel Assembly Cooling Time-Dependent Coefficients
(ZR-Clad Fuel)

Cooling Time (years)	Array/Class 8x8B						
	A	B	C	D	E	F	G
≥ 3	28219.6	28963.7	-17616.2	-147.68	5887.41	-1730.96	1048.21
≥ 4	66061.8	-10742.4	-1961.82	-123.066	6565.54	-2356.05	-298.005
≥ 5	95790.7	-53401.7	19836.7	-134.584	7145.41	-2637.09	-298.858
≥ 6	117477	-90055.9	41383.9	-154.758	7613.43	-2612.69	-64.9921
≥ 7	134090	-120643	60983	-168.675	7809	-2183.3	-40.8885
≥ 8	148186	-149181	81418.7	-185.726	8190.07	-2040.31	-260.773
≥ 9	159082	-172081	99175.2	-197.185	8450.86	-1792.04	-381.705
≥ 10	168816	-191389	113810	-195.613	8359.87	-1244.22	-613.594
≥ 11	177221	-210599	131099	-208.3	8810	-1466.49	-819.773
≥ 12	183929	-224384	143405	-207.497	8841.33	-1227.71	-929.708
≥ 13	191093	-240384	158327	-204.95	8760.17	-811.708	-1154.76
≥ 14	196787	-252211	169664	-204.574	8810.95	-610.928	-1208.97
≥ 15	203345	-267656	186057	-208.962	9078.41	-828.954	-1383.76
≥ 16	207973	-276838	196071	-204.592	9024.17	-640.808	-1436.43
≥ 17	213891	-290411	211145	-202.169	9024.19	-482.1	-1595.28
≥ 18	217483	-294066	214600	-194.243	8859.35	-244.684	-1529.61
≥ 19	220504	-297897	219704	-190.161	8794.97	-10.9863	-1433.86
≥ 20	227821	-318395	245322	-194.682	9060.96	-350.308	-1741.16

Table 2.4-4 (Page 3 of 10)

BWR Fuel Assembly Cooling Time-Dependent Coefficients
(ZR-Clad Fuel)

Cooling Time (years)	Array/Class 8x8C/D/E						
	A	B	C	D	E	F	G
≥ 3	28592.7	28691.5	-17773.6	-149.418	5969.45	-1746.07	1063.62
≥ 4	66720.8	-12115.7	-1154	-128.444	6787.16	-2529.99	-302.155
≥ 5	96929.1	-55827.5	21140.3	-136.228	7259.19	-2685.06	-334.328
≥ 6	118190	-92000.2	42602.5	-162.204	7907.46	-2853.42	-47.5465
≥ 7	135120	-123437	62827.1	-172.397	8059.72	-2385.81	-75.0053
≥ 8	149162	-152986	84543.1	-195.458	8559.11	-2306.54	-183.595
≥ 9	161041	-177511	103020	-200.087	8632.84	-1864.4	-433.081
≥ 10	171754	-201468	122929	-209.799	8952.06	-1802.86	-755.742
≥ 11	179364	-217723	137000	-215.803	9142.37	-1664.82	-847.268
≥ 12	186090	-232150	150255	-216.033	9218.36	-1441.92	-975.817
≥ 13	193571	-249160	165997	-213.204	9146.99	-1011.13	-1119.47
≥ 14	200034	-263671	180359	-210.559	9107.54	-694.626	-1312.55
≥ 15	205581	-275904	193585	-216.242	9446.57	-1040.65	-1428.13
≥ 16	212015	-290101	207594	-210.036	9212.93	-428.321	-1590.7
≥ 17	216775	-299399	218278	-204.611	9187.86	-398.353	-1657.6
≥ 18	220653	-306719	227133	-202.498	9186.34	-181.672	-1611.86
≥ 19	224859	-314004	235956	-193.902	8990.14	145.151	-1604.71
≥ 20	228541	-320787	245449	-200.727	9310.87	-230.252	-1570.18

Table 2.4-4 (Page 4 of 10)

BWR Fuel Assembly Cooling Time-Dependent Coefficients
(ZR-Clad Fuel)

Cooling Time (years)	Array/Class 9x9A						
	A	B	C	D	E	F	G
≥ 3	30538.7	28463.2	-18105.5	-150.039	6226.92	-1876.69	1034.06
≥ 4	71040.1	-16692.2	1164.15	-128.241	7105.27	-2728.58	-414.09
≥ 5	100888	-60277.7	24150.1	-142.541	7896.11	-3272.86	-232.197
≥ 6	124846	-102954	50350.8	-161.849	8350.16	-3163.44	-91.1396
≥ 7	143516	-140615	76456.5	-185.538	8833.04	-2949.38	-104.802
≥ 8	158218	-171718	99788.2	-196.315	9048.88	-2529.26	-259.929
≥ 9	172226	-204312	126620	-214.214	9511.56	-2459.19	-624.954
≥ 10	182700	-227938	146736	-215.793	9555.41	-1959.92	-830.943
≥ 11	190734	-246174	163557	-218.071	9649.43	-1647.5	-935.021
≥ 12	199997	-269577	186406	-223.975	9884.92	-1534.34	-1235.27
≥ 13	207414	-287446	204723	-228.808	10131.7	-1614.49	-1358.61
≥ 14	215263	-306131	223440	-220.919	9928.27	-988.276	-1638.05
≥ 15	221920	-321612	239503	-217.949	9839.02	-554.709	-1784.04
≥ 16	226532	-331778	252234	-216.189	9893.43	-442.149	-1754.72
≥ 17	232959	-348593	272609	-219.907	10126.3	-663.84	-1915.3
≥ 18	240810	-369085	296809	-219.729	10294.6	-859.302	-2218.87
≥ 19	244637	-375057	304456	-210.997	10077.8	-425.446	-2127.83
≥ 20	248112	-379262	309391	-204.191	9863.67	100.27	-2059.39

Table 2.4-4 (Page 5 of 10)

BWR Fuel Assembly Cooling Time-Dependent Coefficients
(ZR-Clad Fuel)

Cooling Time (years)	Array/Class 9x9B						
	A	B	C	D	E	F	G
≥ 3	30613.2	28985.3	-18371	-151.117	6321.55	-1881.28	988.92
≥ 4	71346.6	-15922.9	631.132	-128.876	7232.47	-2810.64	-471.737
≥ 5	102131	-60654.1	23762.7	-140.748	7881.6	-3156.38	-417.979
≥ 6	127187	-105842	51525.2	-162.228	8307.4	-2913.08	-342.13
≥ 7	146853	-145834	79146.5	-185.192	8718.74	-2529.57	-484.885
≥ 8	162013	-178244	103205	-197.825	8896.39	-1921.58	-584.013
≥ 9	176764	-212856	131577	-215.41	9328.18	-1737.12	-1041.11
≥ 10	186900	-235819	151238	-218.98	9388.08	-1179.87	-1202.83
≥ 11	196178	-257688	171031	-220.323	9408.47	-638.53	-1385.16
≥ 12	205366	-280266	192775	-223.715	9592.12	-472.261	-1661.6
≥ 13	215012	-306103	218866	-231.821	9853.37	-361.449	-1985.56
≥ 14	222368	-324558	238655	-228.062	9834.57	3.47358	-2178.84
≥ 15	226705	-332738	247316	-224.659	9696.59	632.172	-2090.75
≥ 16	233846	-349835	265676	-221.533	9649.93	913.747	-2243.34
≥ 17	243979	-379622	300077	-222.351	9792.17	1011.04	-2753.36
≥ 18	247774	-386203	308873	-220.306	9791.37	1164.58	-2612.25
≥ 19	254041	-401906	327901	-213.96	9645.47	1664.94	-2786.2
≥ 20	256003	-402034	330566	-215.242	9850.42	1359.46	-2550.06

Table 2.4-4 (Page 6 of 10)

BWR Fuel Assembly Cooling Time-Dependent Coefficients
(ZR-Clad Fuel)

Cooling Time (years)	Array/Class 9x9C/D						
	A	B	C	D	E	F	G
≥ 3	30051.6	29548.7	-18614.2	-148.276	6148.44	-1810.34	1006
≥ 4	70472.7	-14696.6	-233.567	-127.728	7008.69	-2634.22	-444.373
≥ 5	101298	-59638.9	23065.2	-138.523	7627.57	-2958.03	-377.965
≥ 6	125546	-102740	49217.4	-160.811	8096.34	-2798.88	-259.767
≥ 7	143887	-139261	74100.4	-184.302	8550.86	-2517.19	-275.151
≥ 8	159633	-172741	98641.4	-194.351	8636.89	-1838.81	-486.731
≥ 9	173517	-204709	124803	-212.604	9151.98	-1853.27	-887.137
≥ 10	182895	-225481	142362	-218.251	9262.59	-1408.25	-978.356
≥ 11	192530	-247839	162173	-217.381	9213.58	-818.676	-1222.12
≥ 12	201127	-268201	181030	-215.552	9147.44	-232.221	-1481.55
≥ 13	209538	-289761	203291	-225.092	9588.12	-574.227	-1749.35
≥ 14	216798	-306958	220468	-222.578	9518.22	-69.9307	-1919.71
≥ 15	223515	-323254	237933	-217.398	9366.52	475.506	-2012.93
≥ 16	228796	-334529	250541	-215.004	9369.33	662.325	-2122.75
≥ 17	237256	-356311	273419	-206.483	9029.55	1551.3	-2367.96
≥ 18	242778	-369493	290354	-215.557	9600.71	659.297	-2589.32
≥ 19	246704	-377971	302630	-210.768	9509.41	1025.34	-2476.06
≥ 20	249944	-382059	308281	-205.495	9362.63	1389.71	-2350.49

Table 2.4-4 (Page 7 of 10)

BWR Fuel Assembly Cooling Time-Dependent Coefficients
(ZR-Clad Fuel)

Cooling Time (years)	Array/Class 9x9E/F						
	A	B	C	D	E	F	G
≥ 3	30284.3	26949.5	-16926.4	-147.914	6017.02	-1854.81	1026.15
≥ 4	69727.4	-17117.2	1982.33	-127.983	6874.68	-2673.01	-359.962
≥ 5	98438.9	-58492	23382.2	-138.712	7513.55	-3038.23	-112.641
≥ 6	119765	-95024.1	45261	-159.669	8074.25	-3129.49	221.182
≥ 7	136740	-128219	67940.1	-182.439	8595.68	-3098.17	315.544
≥ 8	150745	-156607	88691.5	-193.941	8908.73	-2947.64	142.072
≥ 9	162915	-182667	109134	-198.37	8999.11	-2531	-93.4908
≥ 10	174000	-208668	131543	-210.777	9365.52	-2511.74	-445.876
≥ 11	181524	-224252	145280	-212.407	9489.67	-2387.49	-544.123
≥ 12	188946	-240952	160787	-210.65	9478.1	-2029.94	-652.339
≥ 13	193762	-250900	171363	-215.798	9742.31	-2179.24	-608.636
≥ 14	203288	-275191	196115	-218.113	9992.5	-2437.71	-1065.92
≥ 15	208108	-284395	205221	-213.956	9857.25	-1970.65	-1082.94
≥ 16	215093	-301828	224757	-209.736	9789.58	-1718.37	-1303.35
≥ 17	220056	-310906	234180	-201.494	9541.73	-1230.42	-1284.15
≥ 18	224545	-320969	247724	-206.807	9892.97	-1790.61	-1381.9
≥ 19	226901	-322168	250395	-204.073	9902.14	-1748.78	-1253.22
≥ 20	235561	-345414	276856	-198.306	9720.78	-1284.14	-1569.18

Table 2.4-4 (Page 8 of 10)

BWR Fuel Assembly Cooling Time-Dependent Coefficients
(ZR-Clad Fuel)

Cooling Time (years)	Array/Class 9x9G						
	A	B	C	D	E	F	G
≥ 3	35158.5	26918.5	-17976.7	-149.915	6787.19	-2154.29	836.894
≥ 4	77137.2	-19760.1	2371.28	-130.934	8015.43	-3512.38	-455.424
≥ 5	113405	-77931.2	35511.2	-150.637	8932.55	-4099.48	-629.806
≥ 6	139938	-128700	68698.3	-173.799	9451.22	-3847.83	-455.905
≥ 7	164267	-183309	109526	-193.952	9737.91	-3046.84	-737.992
≥ 8	182646	-227630	146275	-210.936	10092.3	-2489.3	-1066.96
≥ 9	199309	-270496	184230	-218.617	10124.3	-1453.81	-1381.41
≥ 10	213186	-308612	221699	-235.828	10703.2	-1483.31	-1821.73
≥ 11	225587	-342892	256242	-236.112	10658.5	-612.076	-2134.65
≥ 12	235725	-370471	285195	-234.378	10604.9	118.591	-2417.89
≥ 13	247043	-404028	323049	-245.79	11158.2	-281.813	-2869.82
≥ 14	253649	-421134	342682	-243.142	11082.3	400.019	-2903.88
≥ 15	262750	-448593	376340	-245.435	11241.2	581.355	-3125.07
≥ 16	270816	-470846	402249	-236.294	10845.4	1791.46	-3293.07
≥ 17	279840	-500272	441964	-241.324	11222.6	1455.84	-3528.25
≥ 18	284533	-511287	458538	-240.905	11367.2	1459.68	-3520.94
≥ 19	295787	-545885	501824	-235.685	11188.2	2082.21	-3954.2
≥ 20	300209	-556936	519174	-229.539	10956	2942.09	-3872.87

Table 2.4-4 (Page 9 of 10)

BWR Fuel Assembly Cooling Time-Dependent Coefficients
(ZR-Clad Fuel)

Cooling Time (years)	Array/Class 10x10A/B/G						
	A	B	C	D	E	F	G
≥ 3	29285.4	27562.2	-16985	-148.415	5960.56	-1810.79	1001.45
≥ 4	67844.9	-14383	395.619	-127.723	6754.56	-2547.96	-369.267
≥ 5	96660.5	-55383.8	21180.4	-137.17	7296.6	-2793.58	-192.85
≥ 6	118098	-91995	42958	-162.985	7931.44	-2940.84	60.9197
≥ 7	135115	-123721	63588.9	-171.747	8060.23	-2485.59	73.6219
≥ 8	148721	-151690	84143.9	-190.26	8515.81	-2444.25	-63.4649
≥ 9	160770	-177397	104069	-197.534	8673.6	-2101.25	-331.046
≥ 10	170331	-198419	121817	-213.692	9178.33	-2351.54	-472.844
≥ 11	179130	-217799	138652	-209.75	9095.43	-1842.88	-705.254
≥ 12	186070	-232389	151792	-208.946	9104.52	-1565.11	-822.73
≥ 13	192407	-246005	164928	-209.696	9234.7	-1541.54	-979.245
≥ 14	200493	-265596	183851	-207.639	9159.83	-1095.72	-1240.61
≥ 15	205594	-276161	195760	-213.491	9564.23	-1672.22	-1333.64
≥ 16	209386	-282942	204110	-209.322	9515.83	-1506.86	-1286.82
≥ 17	214972	-295149	217095	-202.445	9292.34	-893.6	-1364.97
≥ 18	219312	-302748	225826	-198.667	9272.27	-878.536	-1379.58
≥ 19	223481	-310663	235908	-194.825	9252.9	-785.066	-1379.62
≥ 20	227628	-319115	247597	-199.194	9509.02	-1135.23	-1386.19

Table 2.4-4 (Page 10 of 10)

BWR Fuel Assembly Cooling Time-Dependent Coefficients
(ZR-Clad Fuel)

Cooling Time (years)	Array/Class 10x10C						
	A	B	C	D	E	F	G
≥ 3	31425.3	27358.9	-17413.3	-152.096	6367.53	-1967.91	925.763
≥ 4	71804	-16964.1	1000.4	-129.299	7227.18	-2806.44	-416.92
≥ 5	102685	-62383.3	24971.2	-142.316	7961	-3290.98	-354.784
≥ 6	126962	-105802	51444.6	-164.283	8421.44	-3104.21	-186.615
≥ 7	146284	-145608	79275.5	-188.967	8927.23	-2859.08	-251.163
≥ 8	162748	-181259	105859	-199.122	9052.91	-2206.31	-554.124
≥ 9	176612	-214183	133261	-217.56	9492.17	-1999.28	-860.669
≥ 10	187756	-239944	155315	-219.56	9532.45	-1470.9	-1113.42
≥ 11	196580	-260941	174536	-222.457	9591.64	-944.473	-1225.79
≥ 12	208017	-291492	204805	-233.488	10058.3	-1217.01	-1749.84
≥ 13	214920	-307772	221158	-234.747	10137.1	-897.23	-1868.04
≥ 14	222562	-326471	240234	-228.569	9929.34	-183.47	-2016.12
≥ 15	228844	-342382	258347	-226.944	9936.76	117.061	-2106.05
≥ 16	233907	-353008	270390	-223.179	9910.72	360.39	-2105.23
≥ 17	244153	-383017	304819	-227.266	10103.2	380.393	-2633.23
≥ 18	249240	-395456	321452	-226.989	10284.1	169.947	-2623.67
≥ 19	254343	-406555	335240	-220.569	10070.5	764.689	-2640.2
≥ 20	260202	-421069	354249	-216.255	10069.9	854.497	-2732.77

3.0 DESIGN FEATURES

3.1 Site

3.1.1 Site Location

The HI-STORM 100 Cask System is authorized for general use by 10 CFR Part 50 license holders at various site locations under the provisions of 10 CFR 72, Subpart K.

3.2 Design Features Important for Criticality Control

3.2.1 MPC-24

1. Flux trap size: ≥ 1.09 in.
2. ^{10}B loading in the neutron absorbers: ≥ 0.0267 g/cm^2 (Boral) and ≥ 0.0223 g/cm^2 (METAMIC)

3.2.2 MPC-68 and MPC-68FF

1. Fuel cell pitch: ≥ 6.43 in.
2. ^{10}B loading in the neutron absorbers: ≥ 0.0372 g/cm2 (Boral) and ≥ 0.0310 g/cm2 (METAMIC)

3.2.3 MPC-68F

1. Fuel cell pitch: ≥ 6.43 in.
2. ^{10}B loading in the Boral neutron absorbers: ≥ 0.01 g/cm^2

3.2.4 MPC-24E and MPC-24EF

1. Flux trap size:
   i. Cells 3, 6, 19, and 22: ≥ 0.776 inch
   ii. All Other Cells: ≥ 1.076 inches
2. ^{10}B loading in the neutron absorbers: ≥ 0.0372 g/cm^2 (Boral) and ≥ 0.0310 g/cm^2 (METAMIC)

3.2.5 MPC-32 and MPC-32F

1. Fuel cell pitch: ≥ 9.158 inches
2. ^{10}B loading in the neutron absorbers: ≥ 0.0372 g/cm^2 (Boral) and ≥ 0.0310 g/cm^2 (METAMIC)

3.2 Design features Important for Criticality Control (cont'd)

3.2.6 MPC-68M

1. Basket Cell wall thickness 0.4 in. (nom.)

2. B_4C content in METAMIC-HT shall be ≥ 10 wt. %

3.2.7 Fuel spacers shall be sized to ensure that the active fuel region of intact or undamaged fuel assemblies remains within the neutron poison region of the MPC basket with water in the MPC.

3.2.8 The B_4C content in METAMIC shall be ≤ 33.0 wt.%.

3.2.9 Neutron Absorber Tests

Boral and Metamic Classic

Section 9.1.5.3 of the HI-STORM 100 FSAR is hereby incorporated by reference into the HI-STORM 100 CoC. For each MPC model specified in Sections 3.2.1 through 3.2.5 above, the neutron absorber shall meet the minimum requirements for ^{10}B areal density or B_4C content, as applicable.

Metamic-HT (Section 3.2.6 above)

1. The weight percentage of the boron carbide must be confirmed to be greater than or equal to 10% in each lot of Al/B4C powder.

2. The areal density of the B-10 isotope corresponding to the 10% min. weight density in the manufactured Metamic-HT panels shall be independently confirmed by the neutron attenuation test method by testing at least one coupon from a randomly selected panel in each lot.

3. If the B-10 areal density criterion in the tested panels fails to meet the specific minimum, then the manufacturer has the option to reject the entire lot or to test a statistically significant number of panels and perform statistical analysis for acceptance.

4. All test procedures used in demonstrating compliance with the above requirements shall conform to the cask designer's QA program which has been approved by the USNRC under docket number 71-0784.

3.3 Codes and Standards

The American Society of Mechanical Engineers Boiler and Pressure Vessel Code (ASME Code), 1995 Edition with Addenda through 1997, is the governing Code for the HI-STORM 100 System MPCs, OVERPACKs, and TRANSFER CASKs, as clarified in Specification 3.3.1 below, except for Code Sections V and IX. The latest effective editions of ASME Code Sections V and IX, including addenda, may be used for activities governed by those sections, provided a written reconciliation of the later edition against the 1995 Edition, including addenda, is performed by the certificate holder. American Concrete Institute (ACI) 349-85 is the governing Code for plain concrete as clarified in Appendix 1.D of the Final Safety Analysis Report for the HI-STORM 100 Cask System.

DESIGN FEATURES (continued)

3.3.1 Alternatives to Codes, Standards, and Criteria

Table 3-1 lists approved alternatives to the ASME Code for the design of the MPCs, OVERPACKs, and TRANSFER CASKs of the HI-STORM 100 Cask System.

3.3.2 Construction/Fabrication Alternatives to Codes, Standards, and Criteria

Proposed alternatives to the ASME Code, Sections II and III, 1995 Edition with Addenda through 1997 including modifications to the alternatives allowed by Specification 3.3.1 may be used on a case-specific basis when authorized by the Director of the Office of Nuclear Material Safety and Safeguards or designee. The request for such alternative should demonstrate that:

1. The proposed alternatives would provide an acceptable level of quality and safety, or
2. Compliance with the specified requirements of the ASME Code, Section III, 1995 Edition with Addenda through 1997, would result in hardship or unusual difficulty without a compensating increase in the level of quality and safety.

Requests for alternatives shall be submitted in accordance with 10 CFR 72.4.

(continued)

DESIGN FEATURES (continued)

Table 3-1 (page 1 of 9) LIST OF ASME CODE ALTERNATIVES FOR HI-STORM 100 CASK SYSTEM			
Component	**Reference ASME Code Section/Article**	**Code Requirement**	**Alternative, Justification & Compensatory Measures**
MPC, MPC basket assembly, HI-STORM OVERPACK steel structure, and HI-TRAC TRANSFER CASK steel structure	Subsection NCA	General Requirements. Requires preparation of a Design Specification, Design Report, Overpressure Protection Report, Certification of Construction Report, Data Report, and other administrative controls for an ASME Code stamped vessel.	Because the MPC, OVERPACK, and TRANSFER CASK are not ASME Code stamped vessels, none of the specifications, reports, certificates, or other general requirements specified by NCA are required. In lieu of a Design Specification and Design Report, the HI-STORM FSAR includes the design criteria, service conditions, and load combinations for the design and operation of the HI-STORM 100 System as well as the results of the stress analyses to demonstrate that applicable Code stress limits are met. Additionally, the fabricator is not required to have an ASME-certified QA program. All important-to-safety activities are governed by the NRC-approved Holtec QA program. Because the cask components are not certified to the Code, the terms “Certificate Holder” and “Inspector” are not germane to the manufacturing of NRC-certified cask components. To eliminate ambiguity, the responsibilities assigned to the Certificate Holder in the various articles of Subsections NB, NG, and NF of the Code, as applicable, shall be interpreted to apply to the NRC Certificate of Compliance (CoC) holder (and by extension, to the component fabricator) if the requirement must be fulfilled. The Code term “Inspector” means the QA/QC personnel of the CoC holder and its vendors assigned to oversee and inspect the manufacturing process.
MPC	NB-1100	Statement of requirements for Code stamping of components.	MPC enclosure vessel is designed and will be fabricated in accordance with ASME Code, Section III, Subsection NB to the maximum practical extent, but Code stamping is not required.

Table 3-1 (page 2 of 9)
LIST OF ASME CODE ALTERNATIVES FOR HI-STORM 100 CASK SYSTEM

Component	Reference ASME Code Section/Article	Code Requirement	Alternative, Justification & Compensatory Measures
MPC basket supports and lift lugs	NB-1130	NB-1132.2(d) requires that the first connecting weld of a nonpressure-retaining structural attachment to a component shall be considered part of the component unless the weld is more than 2t from the pressure-retaining portion of the component, where t is the nominal thickness of the pressure-retaining material. NB-1132.2(e) requires that the first connecting weld of a welded nonstructural attachment to a component shall conform to NB-4430 if the connecting weld is within 2t from the pressure-retaining portion of the component.	The MPC basket supports (nonpressure-retaining structural attachments)and lift lugs (nonstructural attachments (relative to the function of lifting a loaded MPC) that are used exclusively for lifting an empty MPC) are welded to the inside of the pressure-retaining MPC shell, but are not designed in accordance with Subsection NB. The basket supports and associated attachment welds are designed to satisfy the stress limits of Subsection NG and the lift lugs and associated attachment welds are designed to satisfy the stress limits of Subsection NF, as a minimum. These attachments and their welds are shown by analysis to meet the respective stress limits for their service conditions. Likewise, non-structural items, such as shield plugs, spacers, etc. if used, can be attached to pressure-retaining parts in the same manner.
MPC	NB-2000	Requires materials to be supplied by ASME-approved material supplier.	Materials will be supplied by Holtec-approved suppliers with Certified Material Test Reports (CMTRs) in accordance with NB-2000 requirements.

Table 3-1 (page 3 of 9) LIST OF ASME CODE ALTERNATIVES FOR HI-STORM 100 CASK SYSTEM			
Component	**Reference ASME Code Section/Article**	**Code Requirement**	**Alternative, Justification & Compensatory Measures**
MPC, MPC basket assembly, HI-STORM OVERPACK and HI-TRAC TRANSFER CASK	NB-3100 NG-3100 NF-3100	Provides requirements for determining design loading conditions, such as pressure, temperature, and mechanical loads.	These requirements are not applicable. The HI-STORM FSAR, serving as the Design Specification, establishes the service conditions and load combinations for the storage system.
MPC	NB-3350	NB-3352.3 requires, for Category C joints, that the minimum dimensions of the welds and throat thickness shall be as shown in Figure NB-4243-1.	Due to MPC basket-to-shell interface requirements, the MPC shell-to-baseplate weld joint design (designated Category C) does not include a reinforcing fillet weld or a bevel in the MPC baseplate, which makes it different than any of the representative configurations depicted in Figure NB-4243-1. The transverse thickness of this weld is equal to the thickness of the adjoining shell (1/2 inch). The weld is designed as a full penetration weld that receives VT and RT or UT, as well as final surface PT examinations. Because the MPC shell design thickness is considerably larger than the minimum thickness required by the Code, a reinforcing fillet weld that would intrude into the MPC cavity space is not included. Not including this fillet weld provides for a higher quality radiographic examination of the full penetration weld. From the standpoint of stress analysis, the fillet weld serves to reduce the local bending stress (secondary stress) produced by the gross structural discontinuity defined by the flat plate/shell junction. In the MPC design, the shell and baseplate thicknesses are well beyond that required to meet their respective membrane stress intensity limits.

DESIGN FEATURES (continued)

Table 3-1 (page 4 of 9) LIST OF ASME CODE ALTERNATIVES FOR HI-STORM 100 CASK SYSTEM			
Component	**Reference ASME Code Section/Article**	**Code Requirement**	**Alternative, Justification & Compensatory Measures**
MPC, MPC Basket Assembly, HI-STORM OVERPACK steel structure, and HI-TRAC TRANSFER CASK steel structure	NB-4120 NG-4120 NF-4120	NB-4121.2, NG-4121.2, and NF-4121.2 provide requirements for repetition of tensile or impact tests for material subjected to heat treatment during fabrication or installation.	In-shop operations of short duration that apply heat to a component, such as plasma cutting of plate stock, welding, machining, coating, and pouring of lead are not, unless explicitly stated by the Code, defined as heat treatment operations. For the steel parts in the HI-STORM 100 System components, the duration for which a part exceeds the off-normal temperature limit defined in Chapter 2 of the FSAR shall be limited to 24 hours in a particular manufacturing process (such as the HI-TRAC lead pouring process).
MPC, MPC basket assembly, HI-STORM OVERPACK steel structure, and HI-TRAC TRANSFER CASK steel structure	NB-4220 NF-4220	Requires certain forming tolerances to be met for cylindrical, conical, or spherical shells of a vessel.	The cylindricity measurements on the rolled shells are not specifically recorded in the shop travelers, as would be the case for a Code-stamped pressure vessel. Rather, the requirements on inter-component clearances (such as the MPC-to-TRANSFER CASK) are guaranteed through fixture-controlled manufacturing. The fabrication specification and shop procedures ensure that all dimensional design objectives, including inter-component annular clearances are satisfied. The dimensions required to be met in fabrication are chosen to meet the functional requirements of the dry storage components. Thus, although the post-forming Code cylindricity requirements are not evaluated for compliance directly, they are indirectly satisfied (actually exceeded) in the final manufactured components.
MPC Lid and Closure Ring Welds	NB-4243	Full penetration welds required for Category C Joints (flat head to main shell per NB-3352.3).	MPC lid and closure ring are not full penetration welds. They are welded independently to provide a redundant seal. Additionally, a weld efficiency factor of 0.45 has been applied to the analyses of these welds.

Table 3-1 (page 5 of 9)
LIST OF ASME CODE ALTERNATIVES FOR HI-STORM 100 CASK SYSTEM

Component	Reference ASME Code Section/Article	Code Requirement	Alternative, Justification & Compensatory Measures
MPC Lid to Shell Weld	NB-5230	Radiographic (RT) or ultrasonic (UT) examination required	Only UT or multi-layer liquid penetrant (PT) examination is permitted. If PT alone is used, at a minimum, it will include the root and final weld layers and each approximately 3/8 inch of weld depth.
MPC Closure Ring, Vent and Drain Cover Plate Welds	NB-5230	Radiographic (RT) or ultrasonic (UT) examination required	Root (if more than one weld pass is required) and final liquid penetrant examination to be performed in accordance with NB-5245. The closure ring provides independent redundant closure for vent and drain cover plates.
MPC Enclosure Vessel and Lid	NB-6111	All completed pressure retaining systems shall be pressure tested.	The MPC enclosure vessel is seal welded in the field following fuel assembly loading. The MPC enclosure vessel shall then be pressure tested as defined in Chapter 9. Accessibility for leakage inspections precludes a Code compliant pressure test. Since the shell welds of the MPC cannot be checked for leakage during this pressure test, the shop leakage test to 10^{-7} ref-cc/sec provides reasonable assurance as to its leak tightness. All MPC enclosure vessel welds (except closure ring and vent/drain cover plate) are inspected by volumetric examination, except the MPC lid-to-shell weld shall be verified by volumetric or multi-layer PT examination. If PT alone is used, at a minimum, it must include the root and final layers and each approximately 3/8 inch of weld depth. For either UT or PT, the maximum undetectable flaw size must be demonstrated to be less than the critical flaw size. The critical flaw size must be determined in accordance with ASME Section XI methods. The critical flaw size shall not cause the primary stress limits of NB-3000 to be exceeded. The inspection results, including relevant findings (indications), shall be made a permanent part of the user's records by video, photographic, or other means which provide an equivalent retrievable record of weld integrity. The video or photographic records should be taken during the final interpretation period described in ASME Section V, Article 6, T-676. The vent/drain cover plate and the closure ring welds are confirmed by liquid penetrant examination. The inspection of the weld must be performed by qualified personnel and shall meet the acceptance requirements of ASME Code Section III, NB-5350 for PT or NB-5332 for UT.

DESIGN FEATURES (continued)

Table 3-1 (page 6 of 9) LIST OF ASME CODE ALTERNATIVES FOR HI-STORM 100 CASK SYSTEM			
Component	**Reference ASME Code Section/Article**	**Code Requirement**	**Alternative, Justification & Compensatory Measures**
MPC Enclosure Vessel	NB-7000	Vessels are required to have overpressure protection	No overpressure protection is provided. The function of the MPC enclosure vessel is to contain the radioactive contents under normal, off-normal, and accident conditions. The MPC vessel is designed to withstand maximum internal pressure considering 100% fuel rod failure and maximum accident temperatures.
MPC Enclosure Vessel	NB-8000	States requirements for nameplates, stamping and reports per NCA-8000.	The HI-STORM100 System is to be marked and identified in accordance with 10CFR71 and 10CFR72 requirements. Code stamping is not required. QA data package to be in accordance with Holtec approved QA program.
MPC Basket Assembly	NG-2000	Requires materials to be supplied by ASME-approved material supplier.	Materials will be supplied by Holtec-approved supplier with CMTRs in accordance with NG-2000 requirements.

Table 3-1 (page 7 of 9)
LIST OF ASME CODE ALTERNATIVES FOR HI-STORM 100 CASK SYSTEM

Component	Reference ASME Code Section/Article	Code Requirement	Alternative, Justification & Compensatory Measures
MPC basket assembly	NG-4420	NG-4427(a) allows a fillet weld in any single continuous weld to be less than the specified fillet weld dimension by not more than 1/16 inch, provided that the total undersize portion of the weld does not exceed 10 percent of the length of the weld. Individual undersize weld portions shall not exceed 2 inches in length.	Modify the Code requirement (intended for core support structures) with the following text prepared to accord with the geometry and stress analysis imperatives for the fuel basket: For the longitudinal MPC basket fillet welds, the following criteria apply: 1) The specified fillet weld throat dimension must be maintained over at least 92 percent of the total weld length. All regions of undersized weld must be less than 3 inches long and separated from each other by at least 9 inches. 2) Areas of undercuts and porosity beyond that allowed by the applicable ASME Code shall not exceed 1/2 inch in weld length. The total length of undercut and porosity over any 1-foot length shall not exceed 2 inches. 3) The total weld length in which items (1) and (2) apply shall not exceed a total of 10 percent of the overall weld length. The limited access of the MPC basket panel longitudinal fillet welds makes it difficult to perform effective repairs of these welds and creates the potential for causing additional damage to the basket assembly (e.g., to the neutron absorber and its sheathing) if repairs are attempted. The acceptance criteria provided in the foregoing have been established to comport with the objectives of the basket design and preserve the margins demonstrated in the supporting stress analysis. From the structural standpoint, the weld acceptance criteria are established to ensure that any departure from the ideal, continuous fillet weld seam would not alter the primary bending stresses on which the design of the fuel baskets is predicated. Stated differently, the permitted weld discontinuities are limited in size to ensure that they remain classifiable as local stress elevators (“peak stress”, F, in the ASME Code for which specific stress intensity limits do not apply).
MPC Basket Assembly	NG-8000	States requirements for nameplates, stamping and reports per NCA-8000.	The HI-STORM100 System is to be marked and identified in accordance with 10CFR71 and 10CFR72 requirements. Code stamping is not required. The MPC basket data package to be in accordance with Holtec approved QA program.
OVERPACK Steel Structure	NF-2000	Requires materials to be supplied by ASME-approved material supplier.	Materials will be supplied by Holtec-approved supplier with CMTRs in accordance with NF-2000 requirements.

DESIGN FEATURES (continued)

Table 3-1 (page 8 of 9) LIST OF ASME CODE ALTERNATIVES FOR HI-STORM 100 CASK SYSTEM			
Component	**Reference ASME Code Section/Article**	**Code Requirement**	**Alternative, Justification & Compensatory Measures**
TRANSFER CASK Steel Structure	NF-2000	Requires materials to be supplied by ASME-approved material supplier.	Materials will be supplied by Holtec-approved supplier with CMTRs in accordance with NF-2000 requirements.
OVERPACK Baseplate and Lid Top Plate	NF-4441	Requires special examinations or requirements for welds where a primary member of thickness 1 inch or greater is loaded to transmit loads in the through thickness direction.	The margins of safety in these welds under loads experienced during lifting operations or accident conditions are quite large. The OVERPACK baseplate welds to the inner shell, pedestal shell, and radial plates are only loaded during lifting conditions and have large safety factors during lifting. Likewise, the top lid plate to lid shell weld has a large structural margin under the inertia loads imposed during a non-mechanistic tipover event.
OVERPACK Steel Structure	NF-3256 NF-3266	Provides requirements for welded joints.	Welds for which no structural credit is taken are identified as “Non-NF” welds in the design drawings. These non-structural welds are specified in accordance with the pre-qualified welds of AWS D1.1. These welds shall be made by welders and weld procedures qualified in accordance with AWS D1.1 or ASME Section IX. Welds for which structural credit is taken in the safety analyses shall meet the stress limits for NF-3256.2, but are not required to meet the joint configuration requirements specified in these Code articles. The geometry of the joint designs in the cask structures are based on the fabricability and accessibility of the joint, not generally contemplated by this Code section governing supports.

Table 3-1 (page 9 of 9)
LIST OF ASME CODE ALTERNATIVES FOR HI-STORM 100 CASK SYSTEM

Component	Reference ASME Code Section/Article	Code Requirement	Alternative, Justification & Compensatory Measures
HI-STORM OVERPACK and HI-TRAC TRANSFER CASK	NF-3320 NF-4720	NF-3324.6 and NF-4720 provide requirements for bolting	These Code requirements are applicable to linear structures wherein bolted joints carry axial, shear, as well as rotational (torsional) loads. The OVERPACK and TRANSFER CASK bolted connections in the structural load path are qualified by design based on the design loadings defined in the FSAR. Bolted joints in these components see no shear or torsional loads under normal storage conditions. Larger clearances between bolts and holes may be necessary to ensure shear interfaces located elsewhere in the structure engage prior to the bolts experiencing shear loadings (which occur only during side impact scenarios). Bolted joints that are subject to shear loads in accident conditions are qualified by appropriate stress analysis. Larger bolt-to-hole clearances help ensure more efficient operations in making these bolted connections, thereby minimizing time spent by operations personnel in a radiation area. Additionally, larger bolt-to-hole clearances allow interchangeability of the lids from one particular fabricated cask to another.
HI-STORM OVERPACK and HI-TRAC TRANSFER CASK	Section II, SA-516/516A	Table 1 – Chemical requirements	All SA-516 material used in the HI-STORM 100 system is required to meet the material composition described in ASME Code Section II, 2007 edition. This edition allows for a different manganese content from the 1995 edition, but does not change the structural or thermal properties of the material.

3.4 Site-Specific Parameters and Analyses

Site-specific parameters and analyses that will require verification by the system user are, as a minimum, as follows:

1. The temperature of 80° F is the maximum average yearly temperature.

2. The allowed temperature extremes, averaged over a 3-day period, shall be greater than -40° F and less than 125° F.

3. a. For storage in freestanding OVERPACKs, the resultant horizontal acceleration (vectorial sum of two horizontal Zero Period Accelerations (ZPAs) at a three-dimensional seismic site), G_H, and vertical ZPA, G_V, on the top surface of the ISFSI pad, expressed as fractions of 'g', shall satisfy the following inequality:

$$G_H + \mu G_V \leq \mu$$

where μ is either the Coulomb friction coefficient for the cask/ISFSI pad interface or the ratio r/h, where 'r' is the radius of the cask and 'h' is the height of the cask center-of-gravity above the ISFSI pad surface. The above inequality must be met for both definitions of μ, but only applies to ISFSIs where the casks are deployed in a freestanding configuration. Unless demonstrated by appropriate testing that a higher coefficient of friction value is appropriate for a specific ISFSI, the value used shall be 0.53. If acceleration time-histories on the ISFSI pad surface are available, G_H and G_V may be the coincident values of the instantaneous net horizontal and vertical accelerations. If instantaneous accelerations are used, the inequality shall be evaluated at each time step in the acceleration time history over the total duration of the seismic event.

If this static equilibrium based inequality cannot be met, a dynamic analysis of the cask/ISFSI pad assemblage with appropriate recognition of soil/structure interaction effects shall be performed to ensure that the casks will not tip over or undergo excessive sliding under the site's Design Basis Earthquake.

(continued)

3.4 Site-Specific Parameters and Analyses (continued)

b. For free-standing casks, under environmental conditions that may degrade the pad/cask interface friction (such as due to icing) the response of the casks under the site's Design Basis Earthquake shall be established using the best estimate of the friction coefficient in an appropriate analysis model. The analysis should demonstrate that the earthquake will not result in cask tipover or cause a cask to fall off the pad. In addition, impact between casks should be precluded, or should be considered an accident for which the maximum g-load experienced by the stored fuel shall be limited to 45 g's.

c. For those ISFSI sites with design basis seismic acceleration values that may overturn or cause excessive sliding of free-standing casks, the HI-STORM 100 System OVERPACKs shall be anchored to the ISFSI pad. The site seismic characteristics and the anchorage system shall meet the following requirements:

i. The site acceleration response spectra at the top of the ISFSI pad shall have ZPAs that meet the following inequalities:

$$G_H \leq 2.12$$

AND

$$G_V \leq 1.5$$

Where:

G_H is the vectorial sum of the two horizontal ZPAs at a three-dimensional seismic site (or the horizontal ZPA at a two-dimensional site) and G_V is the vertical ZPA.

ii. Each HI-STORM 100 dry storage cask shall be anchored with twenty-eight (28), 2-inch diameter studs and compatible nuts of material suitable for the expected ISFSI environment. The studs shall meet the following requirements:

Yield Strength at Ambient Temperature: ≥ 80 ksi

Ultimate Strength at Ambient Temperature: ≥ 125 ksi

Initial Tensile Pre-Stress: ≥ 55 ksi AND ≤ 65 ksi

(continued)

3.4 Site-Specific Parameters and Analyses (continued)

NOTE: The above anchorage specifications are required for the seismic spectra defined in item 3.4.3.c.i. Users may use fewer studs or those of different diameter to account for site-specific seismic spectra less severe than those specified above. The embedment design shall comply with Appendix B of ACI-349-97. A later edition of this Code may be used, provided a written reconciliation is performed.

iii. Embedment Concrete Compressive Strength: ≥ 4,000 psi at 28 days

4. The analyzed flood condition of 15 fps water velocity and a height of 125 feet of water (full submergence of the loaded cask) are not exceeded.

5. The potential for fire and explosion while handling a loaded OVERPACK or TRANSFER CASK shall be addressed, based on site-specific considerations. The user shall demonstrate that the site-specific potential for fire is bounded by the fire conditions analyzed by the Certificate Holder, or an analysis of the site-specific fire considerations shall be performed.

6. a. For freestanding casks, the ISFSI pad shall be verified by analysis to limit cask deceleration during design basis drop and non-mechanistic tip-over events to ≤ 45 g's at the top of the MPC fuel basket. Analyses shall be performed using methodologies consistent with those described in the HI-STORM 100 FSAR. A restriction on the lift and/or drop height is not required if the cask is lifted with a device designed in accordance with applicable stress limits from ANSI N14.6, and/or NUREG-0612, and has redundant drop protection features.

b. For anchored casks, the ISFSI pad shall be designed to meet the embedment requirements of the anchorage design. A cask tip-over event for an anchored cask is not credible. The ISFSI pad shall be verified by analysis to limit cask deceleration during a design basis drop event to ≤ 45 g's at the top of the MPC fuel basket, except as provided for in this paragraph below. Analyses shall be performed using methodologies consistent with those described in the HI-STORM 100 FSAR. A restriction on the lift and/or drop height is not required to be established if the cask is lifted with a device designed in accordance with applicable stress limits from ANSI N14.6, and/or NUREG-0612, and has redundant drop protection features.

(continued)

DESIGN FEATURES (continued)

3.4 Site-Specific Parameters and Analyses (continued)

7. In cases where engineered features (i.e., berms and shield walls) are used to ensure that the requirements of 10CFR72.104(a) are met, such features are to be considered important to safety and must be evaluated to determine the applicable quality assurance category.

8. LOADING OPERATIONS, TRANSPORT OPERATIONS, and UNLOADING OPERATIONS shall only be conducted with working area ambient temperatures ≥ 0° F for all MPC heat loads, and
   a. ≤ 90°F (averaged over a 3-day period) for operations subjected to direct solar heating
   b. ≤ 110°F (averaged over a 3-day period) for operations not subjected to direct solar heating for all MPC heat loads.

9. For those users whose site-specific design basis includes an event or events (e.g., flood) that result in the blockage of any OVERPACK inlet or outlet air ducts for an extended period of time (i.e, longer than the total Completion Time of LCO 3.1.2), an analysis or evaluation may be performed to demonstrate adequate heat removal is available for the duration of the event. Adequate heat removal is defined as fuel cladding temperatures remaining below the short term temperature limit. If the analysis or evaluation is not performed, or if fuel cladding temperature limits are unable to be demonstrated by analysis or evaluation to remain below the short term temperature limit for the duration of the event, provisions shall be established to provide alternate means of cooling to accomplish this objective.

10. Users shall establish procedural and/or mechanical barriers to ensure that during LOADING OPERATIONS and UNLOADING OPERATIONS, either the fuel cladding is covered by water, or the MPC is filled with an inert gas.

11. Site ambient temperature under HI-TRAC TRANSPORT OPERATIONS shall be evaluated in accordance with Section 3.9 requirements.

(continued)

DESIGN FEATURES (continued)

3.5 Cask Transfer Facility (CTF)

3.5.1 TRANSFER CASK and MPC Lifters

Lifting of a loaded TRANSFER CASK and MPC using devices that are not integral to structures governed by 10 CFR Part 50 shall be performed with a CTF that is designed, operated, fabricated, tested, inspected, and maintained in accordance with the guidelines of NUREG-0612, "Control of Heavy Loads at Nuclear Power Plants", as applicable, and the below clarifications. The CTF Structure requirements below do not apply to heavy loads bounded by the regulations of 10 CFR Part 50 or to the loading of an OVERPACK in a belowground restraint system which permits MPC TRANSFER near grade level and does not require an aboveground CTF.

3.5.2 CTF Structure Requirements

3.5.2.1 Cask Transfer Station and Stationary Lifting Devices

1. The metal weldment structure of the CTF structure shall be designed to comply with the stress limits of ASME Section III, Subsection NF, Class 3 for linear structures. The applicable loads, load combinations, and associated service condition definitions are provided in Table 3-2. All compression loaded members shall satisfy the buckling criteria of ASME Section III, Subsection NF.
2. If a portion of the CTF structure is constructed of reinforced concrete, then the factored load combinations set forth in ACI-318 (89) for the loads defined in Table 3-2 shall apply.
3. The TRANSFER CASK and MPC lifting device used with the CTF shall be designed, fabricated, operated, tested, inspected and maintained in accordance with NUREG-0612, Section 5.1.
4. The CTF shall be designed, constructed, and evaluated to ensure that if the MPC is dropped during inter-cask transfer operations, its confinement boundary would not be breached. This requirement applies to CTFs with either stationary or mobile lifting devices.

(continued)

DESIGN FEATURES (continued)

3.5 Cask Transfer Facility (CTF) (continued)

3.5.2.2 Mobile Lift Devices

If a mobile lifting device is used as the lifting device, in lieu of a stationary lifting device, it shall meet the guidelines of NUREG-0612, Section 5.1, with the following clarifications:

1. Mobile lifting devices shall have a minimum safety factor of two over the allowable load table for the lifting device in accordance with the guidance of NUREG-0612, Section 5.1.6(1)(a) and shall be capable of stopping and holding the load during a Design Basis Earthquake (DBE) event.
2. Mobile lifting devices shall conform to meet the requirements of ANSI B30.5, “Mobile and Locomotive Cranes,” in lieu of the requirements of ANSI B30.2, “Overhead and Gantry Cranes.”
3. Mobile cranes are not required to meet the requirements of NUREG-0612, Section 5.1.6(2) for new cranes.
4. Horizontal movements of the TRANSFER CASK and MPC using a mobile crane are prohibited.

(continued)

3.5 Cask Transfer Facility (CTF)(continued)

Table 3-2

Load Combinations and Service Condition Definitions for the CTF Structure (Note 1)

Load Combination	ASME III Service Condition for Definition of Allowable Stress	Comment
D* D + S	Level A	All primary load bearing members must satisfy Level A stress limits
D + M + W' (Note 2) D + F D + E D + Y	Level D	Factor of safety against overturning shall be ≥ 1.1

D = Dead load
D* = Apparent dead load
S = Snow and ice load for the CTF site
M = Tornado missile load for the CTF site
W' = Tornado wind load for the CTF site
F = Flood load for the CTF site
E = Seismic load for the CTF site
Y = Tsunami load for the CTF site

Notes:
1. The reinforced concrete portion of the CTF structure shall also meet the factored combinations of loads set forth in ACI-318(89).
2. Tornado missile load may be reduced or eliminated based on a PRA for the CTF site.

3.6 Forced Helium Dehydration System

3.6.1 System Description

Use of a forced helium dehydration (FHD) system, (a closed-loop system) is an alternative to vacuum drying the MPC for moderate burnup fuel (≤ 45,000 MWD/MTU) with lower MPC heat load and mandatory for drying MPCs containing one or more high burnup fuel assemblies or higher MPC heat loads as indicated in Appendix A Table 3-1. The FHD system shall be designed for normal operation (i.e., excluding startup and shutdown ramps) in accordance with the criteria in Section 3.6.2.

3.6.2 Design Criteria

3.6.2.1 The temperature of the helium gas in the MPC shall be at least 15°F higher than the saturation temperature at coincident pressure.

3.6.2.2 The pressure in the MPC cavity space shall be ≤ 60.3 psig (75 psia) during drying. Backfill pressures shall be as described in Appendix A.

3.6.2.3 The hourly recirculation rate of helium shall be ≥ 10 times the nominal helium mass backfilled into the MPC for fuel storage operations.

3.6.2.4 The partial pressure of the water vapor in the MPC cavity will not exceed 3 torr. The limit is met if the gas temperature at the demoisturizer outlet is verified by measurement to remain ≤ 21°F for a period of 30 minutes or if the dew point of the gas exiting the MPC is verified by measurement to remain ≤ 22.9°F for ≥ 30 minutes.

3.6.2.5 The condensing module shall be designed to de-vaporize the recirculating helium gas to a dew point ≤ 120°F.

3.6.2.6 The demoisturizing module shall be configured to be introduced into its helium conditioning function after the condensing module has been operated for the required length of time to assure that the bulk moisture vaporization in the MPC (defined as Phase 1 in FSAR Appendix 2.B) has been completed.

3.6.2.7 The helium circulator shall be sized to effect the minimum flow rate of circulation required by these design criteria.

3.6.2.8 The pre-heater module shall be engineered to ensure that the temperature of the helium gas in the MPC meets these design criteria.

3.6 Forced Helium Dehydration System (continued)

3.6.3 Fuel Cladding Temperature

A steady-state thermal analysis of the MPC under the forced helium flow scenario shall be performed using the methodology described in HI-STORM 100 FSAR Section 4.4, with due recognition of the forced convection process during FHD system operation. This analysis shall demonstrate that the peak temperature of the fuel cladding, under the most adverse condition of FHD system operation, is below the peak cladding temperature limit for normal conditions of storage for the applicable fuel type (PWR or BWR) and cooling time at the start of dry storage.

3.6.4 Pressure Monitoring During FHD Malfunction

During an FHD malfunction event, described in HI-STORM 100 FSAR Chapter 11 as a loss of helium circulation, the system pressure must be monitored to ensure that the conditions listed therein are met.

3.7 Supplemental Cooling System

3.7.1 System Description

A supplemental cooling system (SCS) is an external system for cooling the MPC inside the HI-TRAC transfer cask during on-site transport. The SCS is required for transport of high burnup fuel under certain heat load conditions defined in Table 3-3. The SCS shall be designed for normal operation (i.e., excluding startup and shutdown ramps) in accordance with the criteria in Section 3.7.2.

3.7.2 Design Criteria

3.7.2.1 Not Used.

3.7.2.2 If water is used as the coolant, the system shall be sized to limit the coolant temperature to below 180ºF under steady-state conditions for the design basis heat load at an ambient air temperature of 110ºF. Any electric motors shall have a backup power supply for uninterrupted operation.

3.7.2.3 The system shall utilize a contamination-free fluid medium in contact with the external surfaces of the MPC and inside surfaces of the HI -TRAC transfer cask to minimize corrosion.

3.7.2.4 All passive components such as tubular heat exchangers, manually operated valves and fittings shall be designed to applicable standards (TEMA, ANSI).

3.7.2.5 The heat dissipation capacity of the SCS shall be equal to or greater than the minimum necessary to ensure that the peak cladding temperature is below 400ºC (752ºF). All heat transfer surfaces in heat exchangers shall be assumed to be fouled to the maximum limits specified in a widely used heat exchange equipment standard such as the Standards of Tubular Exchanger Manufacturers Association.

3.7.2.6 The coolant utilized to extract heat from the MPC shall be high purity water or air. Antifreeze may be used to prevent water from freezing if warranted by operating conditions. (continued)

DESIGN FEATURES (continued)

3.7 Supplemental Cooling System (continued)

3.7.2.7 All pressure boundaries (as defined in the ASME Boiler and Pressure Vessel Code, Section VIII Division 1) shall have pressure ratings that are greater than the maximum system operating pressure by at least 15 psi.

3.7.2.8 All ASME Code components shall comply with Section VIII Division 1 of the ASME Boiler and Pressure Vessel Code.

3.7.2.9 All gasketed and packed joints shall have a minimum design pressure rating of the pump shut-off pressure plus 15 psi.

Table 3-3

Requirements for Supplemental Cooling System

Criteria for use of SCS	Requirement
MPC-68M	Not required
MPC containing one or more high Burnup fuel assemblies (> 45,000 MWD/MTU) and Heat loads more than 90% of maximum permissible heat loads defined in Section 2.4 under higher helium backfill limits in Table 3-2 of Appendix A	Yes
MPC containing one or more high Burnup fuel assemblies (> 45,000 MWD/MTU) and Heat loads more than 90% of heat load limits in Tables 3-3 or 3-4 of Appendix A under lower helium backfill limits in Table 3-2 of Appendix A	Yes

DESIGN FEATURES (continued)

3.8 Combustible Gas Monitoring During MPC Lid Welding and Cutting

During MPC lid-to-shell welding and cutting operations, combustible gas monitoring of the space under the MPC lid is required, to ensure that there is no combustible mixture present.

3.9 Environmental Temperature Requirements

Short term operations involving the HI-TRAC transfer cask can be carried out if the reference ambient temperature (three day average around the cask) is below the Threshold Temperature of 110 deg. F ambient temperature, applicable during HI-TRAC transfer operations inside the 10 CFR Part 50 or 10 CFR Part 52 structural boundary and 90 deg. F outside of it. The determination of the Threshold Temperature compliance shall be made based on the best available thermal data for the site.

If the reference ambient temperature exceeds the corresponding Threshold Temperature then a site specific analysis shall be performed using the actual heat load and reference ambient temperature equal to the three day average to ensure that the steady state peak fuel cladding temperature will remain below the 400°C limit. If the peak fuel cladding temperature exceeds 400°C limit then the operation of a Supplemental Cooling System (SCS) in accordance with LCO 3.1.4 is mandatory.

SCS operation is mandatory if site data is not available or if a user elects to deploy Supplemental Cooling in lieu of site ambient temperature evaluation.