VIRGINIA ELECTRIC AND POWER COMPANY
RICHMOND, VIRGINIA 23261

W. L. STEWART
VICE PRESIDENT
NUCLEAR OPERATIONS

March 16, 1983

Mr. Harold R. Denton, Director
Office of Nuclear Reactor Regulation
Attn: Mr. Steven A. Varga, Chief
Operating Reactors Branch 1
Division of Licensing
U. S. Nuclear Regulatory Commission
Washington, D. C. 20555

Serial No. 143
NO/WDC:acm
Docket No. 50-280
License No. DPR-32

Gentlemen:

RELIEF REQUEST FROM ASME XI HYDROSTATIC TEST
SURRY POWER STATION UNIT 1

Surry Power Station Unit 1 will be performing a repair within a system boundary designated as ASME Class 2 during the refueling outage currently underway. Pursuant to 10 CFR 50.55a paragraph g(5), relief is requested from certain post repair test requirements delineated in ASME Section XI. The following basis is provided.

Specifically it is planned to replace three 1 1/2 inch socket welded drain valves (1-MS-266, 1-MS-106, and 1-MS-143) and one 2 inch socket welded manual isolation valve (1-GN-3), which are just downstream of the main steam trip valves (drawings attached). The governing code ASME XI 80W80 requires a hydrostatic test (IWA 4400 and IWC-5222) for such a repair/replacement. As evidenced by the attached drawings this replacement would require a hydrostatic test of all three steam generators and a considerable portion of attached main steam piping. This test is considered especially difficult and impractical in nature.

Alternate testing proposed is a surface examination (liquid penetrant) and a visual examination (VT-2) in conjunction with a system inservice pressure test (IWC-5221) during start-up, following the refueling outage.

This relief is identical in nature to previous relief requests for replacements on Surry Power Station Unit 1 (Serial No. 530, dated 9/15/82) and on Surry Power Station Unit 2 (Serial No. 680, dated 12/9/82). Reliefs were granted for these replacements (dated 10/1/82 and 12/10/82).

It is our contention, that from the information provided, relief should be granted. Alternative testing proposed provides for the necessary inspection and integrity insurance for all affected welds.

Very truly yours,

W. L. Stewart

W. L. Stewart

8303210617 830316
PDR ADOCK 05000280
P PDR

cc: Mr. James P. O'Reilly, Director
Office of Inspection and Enforcement
Region II

A001 w/check $4.400

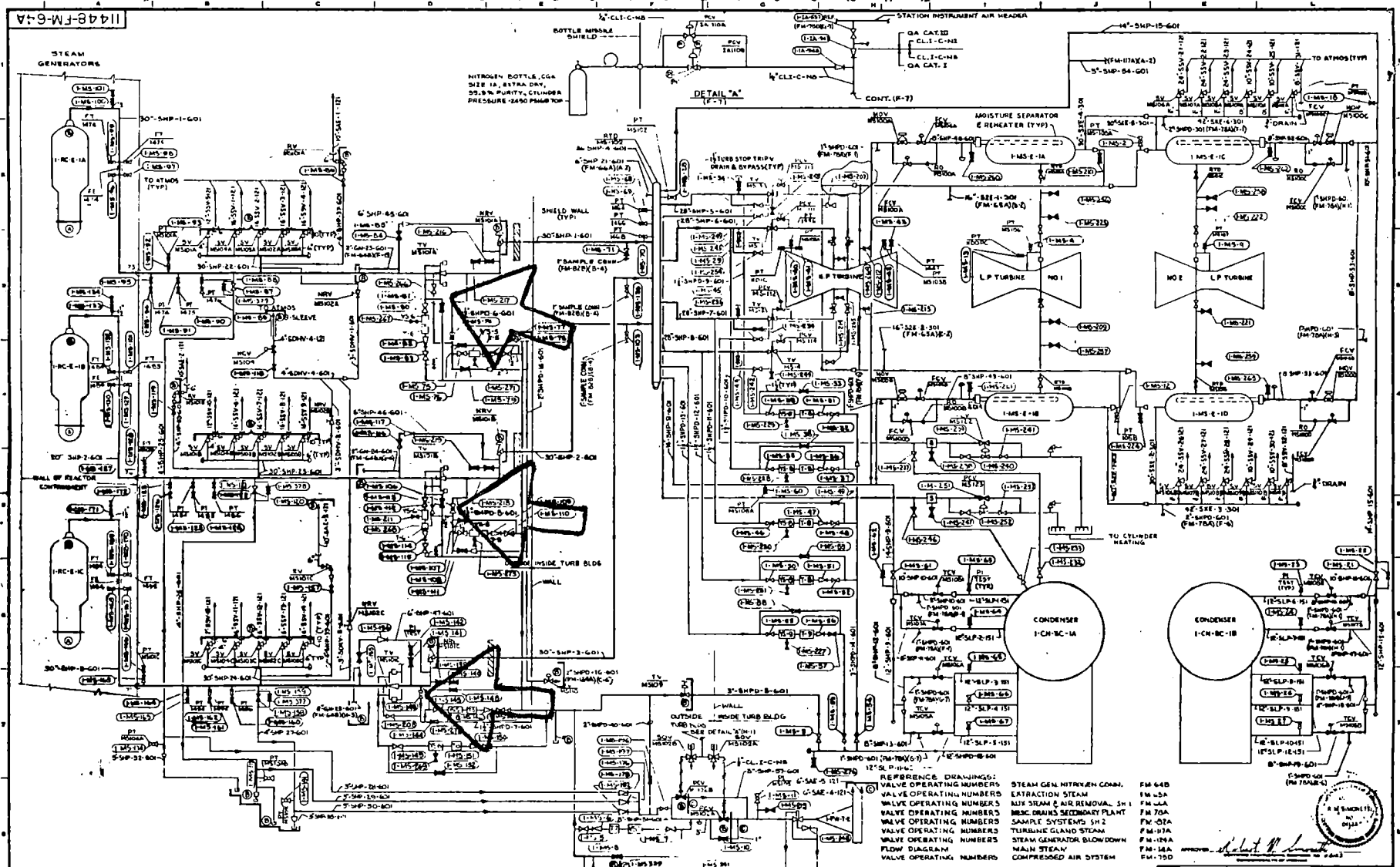
11448-FM-64A
STEAM GENERATORS
STATION INSTRUMENT AIR HEADER
DETAIL "A"
MOISTURE SEPARATOR & REHEATER (TYP)
L.P. TURBINE NO 1
L.P. TURBINE NO 2
CONDENSER 1-CN-BC-1A
CONDENSER 1-CN-BC-1B
TO ATMOS (TYP)
TO CYLINDER HEATING
WALL OF REACTOR CONTAINMENT
INSIDE TURB BLDG
OUTSIDE TURB BLDG
SHIELD WALL (TYP)
REFERENCE DRAWINGS:
VALVE OPERATING NUMBERS STEAM GEN. NITROGEN CONN. FM-64B
VALVE OPERATING NUMBERS EXTRACTION STEAM FM-65A
VALVE OPERATING NUMBERS AUX STEAM & AIR REMOVAL SH 1 FM-66A
VALVE OPERATING NUMBERS MISC. DRAINS SECONDARY PLANT FM-78A
VALVE OPERATING NUMBERS SAMPLE SYSTEMS SH 2 FM-82A
VALVE OPERATING NUMBERS TURBINE GLAND STEAM FM-87A
VALVE OPERATING NUMBERS STEAM GENERATOR BLOWDOWN FM-114A
FLOW DIAGRAM MAIN STEAM FM-14A
VALVE OPERATING NUMBERS COMPRESSED AIR SYSTEM FM-75D
THE INFORMATION ON THIS DRAWING MAY NOT BE COPIED OR USED FOR OTHER THAN THE CONSTRUCTION, MAINTENANCE OR REPAIR OF THE PLANT FACILITY DESCRIBED IN THE TITLE BLOCK.
VALVE OPERATING NUMBERS
MAIN STEAM
SURRY POWER STATION
VIRGINIA ELECTRIC AND POWER COMPANY
STONE & WEBSTER ENGINEERING CORPORATION
BOSTON, MASS.
11448-FM-64A

11448-FM-64B

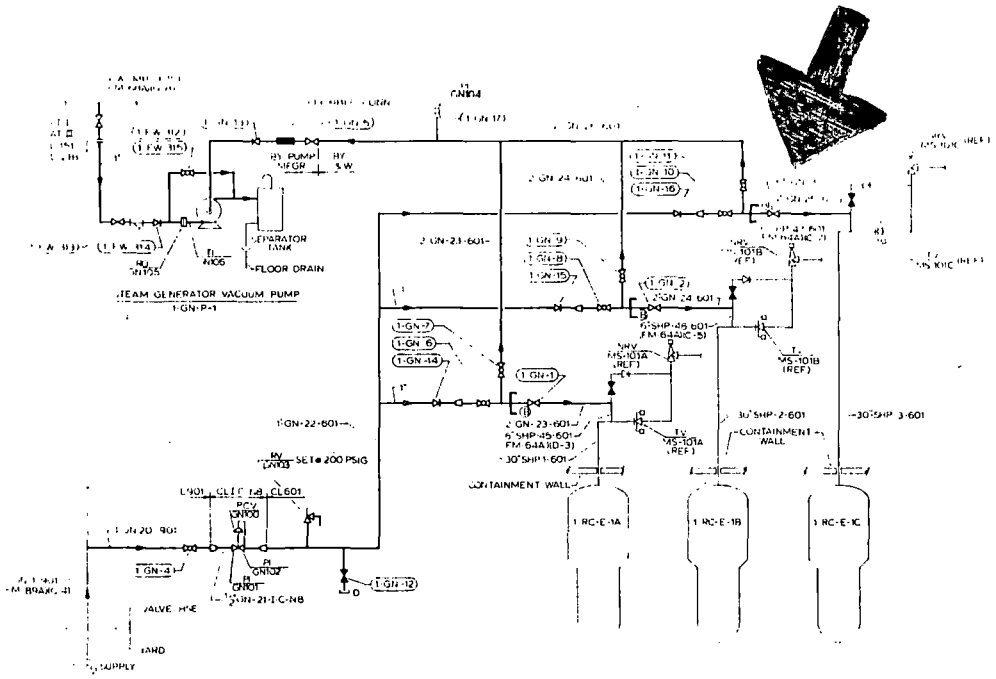

REFERENCE DRAWINGS

VALVE OPERATING NUMBERS [illegible]	FM [illegible]
VALVE OPERATING NUMBERS FEEDWATER SYS	FM 68A
VALVE OPERATING NUMBERS MAIN STEAM SYS	FM 64A
FLOW DIAGRAM STEAM GENERATOR NITROGEN CONN	FM 14B

VALVE OPPERATING NUMBERS
STM GEN NITROGEN CONN
SURRY POWER STATION
V. E. P. C. O.

11448-FM-64B.A

1	ORIGINAL ISSUE		BLJ	