ELECTRICAL LOAD ANALYSIS

FOR

480 VOLT EMERGENCY POWER SYSTEM

SURRY POWER STATION

UNIT 2

DOCKET NO. 50-281

LICENSE NO. DPR-37

ISSUED: MARCH 24, 1980

VIRGINIA ELECTRIC AND POWER COMPANY

8005280 630

INDEX

1.0 System Description

2.0 Load Tabulation

3.0 Voltage Analysis; 480 Volt Safety Buses

4.0 Feeder Cables to New Load Centers 2H1 and 2J1

Appendix A - 4 kV Safety Bus Voltage Profiles

Appendix B - Tabulation of Loads

1.0 System Description

Reference attached Sketch 12846.23-EKS-21A.

A 480 V load center will be added to each train of the emergency power system. The equipment used will be Class IE load centers purchased for North Anna Units 3 and 4 and transferred from storage there. The load center transformer primaries will be connected in parallel with the primaries of the existing load center transformers to the 4,160 V feed breakers presently in use. Feeder cables to the existing motor control centers (i.e., two per load center) will be disconnected from the existing load centers and connected to the new load center of the associated train of emergency power. The new load centers will be located in the associated train emergency switchgear room near the existing 480 V load centers.

STONE & WEBSTER ENGINEERING CORPORATION

UNIT 2

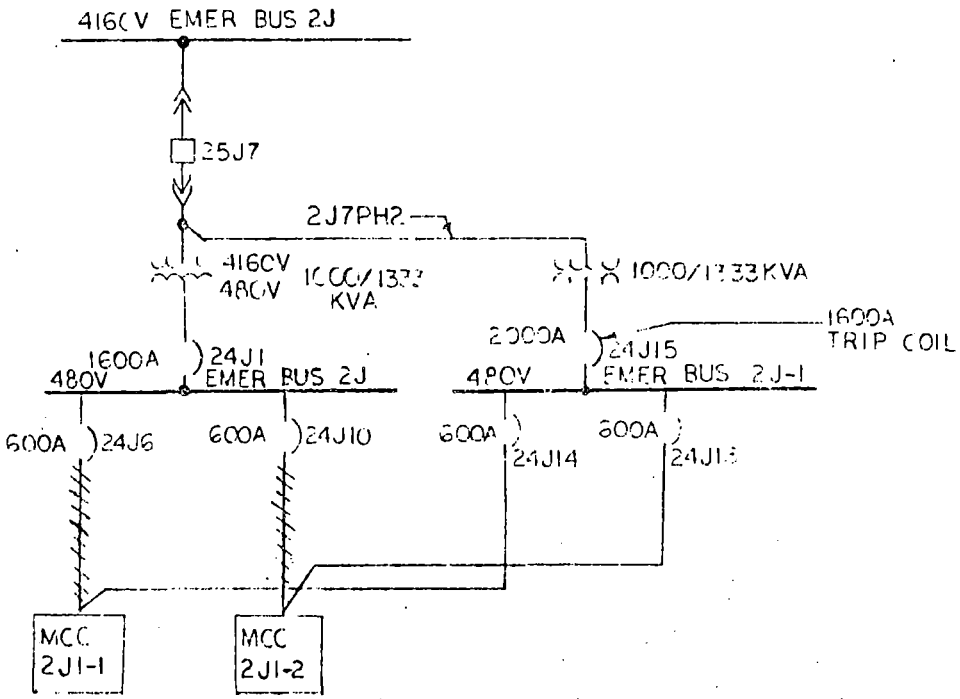

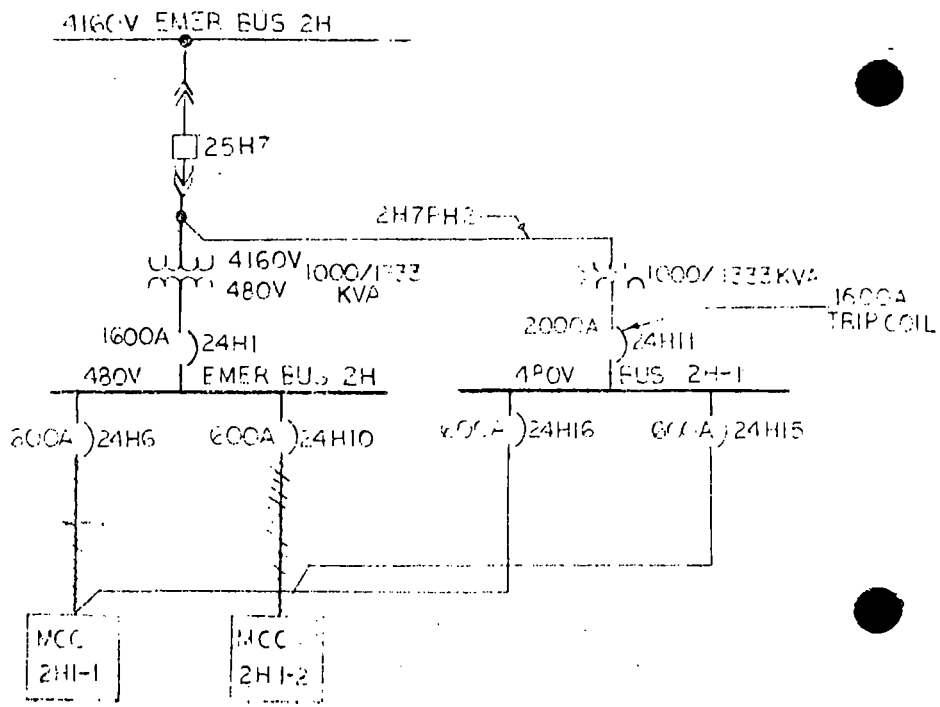

QA CAT I

POWER INDUSTRY GROUP	TITLE ONE LINE DIAGRAM 480V EMER POWER SYS SURRY POWER STATION	SCALE NONE
CHECKED		DATE 10-18-73
CORRECT		
APPROVED		12846.23-EKS-21A

2.0 Load Tabulation

To calculate bus loadings accurately and conservatively, the following guidelines were established:

a. All loads which cycle under automatic control (sump pump, air compressors, etc) were assumed running when analyzing a bus. This approach is highly conservative since it does not consider load duty cycling or diversity factor.

b. Where available, driven equipment brake-horsepower was used for load tabulation. If brake-horsepower was not available, motor nameplate horsepower was used.

c. Where the control room operator has a choice of equipment providing redundant services (i.e., control room chillers), it was assumed that the equipment connected to the bus under analysis was in service.

d. All motor-operated valves on these buses were considered short-term loads of relatively low demand. The majority of these valves have operating times of less than 30 seconds. They were not listed as continuous load on the bus.

e. The breaker trip points were determined from the time versus current trip characteristic curves for the device. Because of manufacturing tolerances, this curve is a band. the lower bound of this band was used to determine the earliest possible time at which the breaker could trip.

f. Loads were assumed as constant kVA when computing voltage profiles. Appendix B is the tabulation of safety-related motor control center loadings.

Each load on the 480 V emergency bus was also reviewed with station operating supervisors to establish which are connected for various plant conditions. This review established which loads ran only for refueling or were started by manual control (such as hydrogen recombiner). In addition, some loads were determined to be automatically shed by a consequence limiting safeguard (CLS) signal.

2.1 New 480 V Load Centers 2H1 and 2J1

Data: Load Center 2H1

ITE 480 V metal-clad unit substation, indoor-type.

1. Incoming Section: 5 kV air terminal chamber.

1. Incoming Section: 5 kV air termination chamber.

2. Transformer: 4,160 V primary delta; 480 V secondary delta with 1-2 1/2 percent tap above rated and 3-2 1/2 percent taps below rated voltage on primary. Impedance: 8 percent on 1,000 kVA base transformer rated 1,000 kVA self-cooled, 1,333 kVA fan-cooled (fans installed); dry type ventilated.

3. Switchgear: Two vertical sections with seven breaker compartments and one instrument compartment. 480 V bus throat connected to transformer.

4. Breaker: ITE K600 series with K1600 (1,600 amp) incoming line breaker.

Loading on the original 480 V load centers 2H and 2J is reduced by transferring feeders for two MCCs from 2H and 2J to the new load centers.

Load center power requirements are outlined on tabulation of loads sheets 1 and 2, attached. From the totals on tabulation sheets 1 and 2, the maximum connected loads on buses 2H and 2J would occur during a LOCA. This maximum load represents:

1,002 kVA/1,333 kVA, or 75.2 percent of bus 2H capacity

1,002 kVA/1,333 kVA, or 75.2 percent of bus 2J capacity

Although pressurizer heaters trip on low pressurizer level, it is possible to re-energize them without exceeding ratings of load centers. With pressurizer heaters on during a LOCA, bus 2H would be 94 percent loaded and bus 2J would be 90 percent loaded.

Summary: 480 V load centers 2H and 2J are within design rated capacity for all station operating conditions.

2. Transformer: 4,160 V primary delta, 480 V secondary delta, with 4 - 2 1/2 percent taps below rated voltage on primary. Impedance: 8 percent on 1,000 kVA base transformer rated 1,000 kVA self-cooled, 1,333 kVA fan-cooled (fans installed); dry-type ventilated.

3. Switchgear: Two vertical sections with seven breaker compartments and one instrument compartment. 480 V bus throat connected to transformer.

4. Breakers: ITE K600 series with K2000 (2,000 amp) incoming line breaker.

Load center 2J1 is the same as 2H1 except opposite hand.

The two new load centers, 2H1 and 2J1, will each feed two safety-related motor control centers (MCCs). The MCCs are the only loads on these new buses.

The maximum loading on the load centers, as a result of the MCCs is summarized below:

Load Center 2H1 (LOCA Loading - Max)	
MCC 2H1-1	355 kVA
MCC 2H1-2	188.9 kVA
Total:	543.9 kVA
Load Center 2J1 (LOOP Loading - Max)	
MCC 2J1-1	154.5 kVA
MCC 2J1-2	239.6 kVA
Total:	394.1 kVA

The new load centers are rated 1,000/1,333 kVA where the 1,000 kVA is a self-cooled rating. The maximum loading on 2H1 is 54 percent of load center continuous rating. The maximum loading of 2J1 is 39 percent of load center continuous rating.

Summary: 480 V load centers 2H1 and 2J1 are within design rated capacity for all station operating conditions.

2.2 Original 480 V - Load Centers 2H and 2J

Data: Load Centers 2H and 2J

ITE 480 V metal-clad unit substation, indoor type.

480 V UNIT SUBSTATION "2H"

TABULATION OF LOADS - SHEET 1

MODIFIED SYSTEM

BREAKER No.	UNIT SUBSTATION 2H DESCRIPTION OF LOAD	KVA LOAD(3) LOCA W/LOOP	LOOP	NORMAL
24H1	Incoming Line, 1600 A			
24H2	Pressurizer Heater; 250 kW	(2)	250	250
24H3	LHSI Pp, 2-SI-P-1A; 250 Hp	223	-	-
24H4	Inside Recirc Spray Pp, 2-RS-P-1A; 300 Hp	277	-	-
24H5	Containment Spray Pp, 2-CS-P-1A; 250 Hp	225	-	-
24H6	Spare	-	-	-
24H7	Outside Recirc Spray Pp, 2-RS-P-2A; 300 Hp	277	-	-
24H8	Containment Recirc Fan, 2-VS-F-1A; 125 Hp	(1)	118	118
24H9	Future	-	-	-
24H10	Spare	-	-	-
	TOTALS	1,002	368	368

(1) Trips on receipt of SIS signal.

(2) Trips on low pressurizer level.

(3) Abbreviations for Unit conditions:

LOCA - Loss of Coolant Accident

LOOP - Loss of Offsite Power

NORMAL - Normal Unit Operation, 100 Percent Power

Motor KVA from Manufacturer's Data sheets

480 V UNIT SUBSTATION "2J"

TABULATION OF LOADS - SHEET 2

MODIFIED SYSTEM

BREAKER NO.	UNIT SUBSTATION 2J DESCRIPTION OF LOAD	KVA LOAD(3) LOCA W/LOOP	LOOP	NORMAL
24J1	Incoming Line, 1600A			
24J2	Spare	-	-	-
24J3	LHSI Pp, 2-SI-P-1B; 250 Hp	223	-	-
24J4	Inside Recirc Spray Pp, 2-RS-P-1B; 300 Hp	277	-	-
24J5	Containment Spray Pp, 2-CS-P-1B, 250 Hp	225	-	-
24J6	Spare	-	-	-
24J7	Outside Recirc Spray Pp, 1-RS-2B; 300 Hp	277	-	-
24J8	Containment Recirc Fan, 2-VS-F-1B; 125 Hp	(1)	118	118
24J9	Pressurizer Heater, 200 kW	(2)	200	200
24J10	Spare	-	-	-
	TOTALS	1,002	318	318

(1) Trips on receipt of SIS signal.

(2) Trips on low pressurizer level.

(3) Abbreviations for Unit conditions:

LOCA - Loss of Coolant Accident

LOOP - Loss of Offsite Power

NORMAL - Normal Unit Operation, 100 Percent Power

Motor KVA from Manufacturer's Data sheets

480 V UNIT SUBSTATION "2H1"
TABULATION OF LOADS - SHEET 3
MODIFIED SYSTEM

BREAKER NO.	UNIT SUBSTATION 2H1 DESCRIPTION OF LOAD	KVA LOAD LOCA W/LOOP	LOOP	LOCA
24H11	Incoming Line, 2000A			
24H16	MCC 2H1-1, 600A	355	355.6	355
24H15	MCC 2H1-2, 600A	188.9	207.8	188.9
	TOTALS	543.9	543.4	543.9

NOTES:

(1) Spare cubicles exist in the new substation that are not presently filled.

(2) For detailed breakdown of loads on above, reference Appendix B.

480 V UNIT SUBSTATION "2J1"
TABULATION OF LOADS - SHEET 4
MODIFIED SYSTEM

BREAKER NO.	UNIT SUBSTATION 2J1 DESCRIPTION OF LOAD	KVA LOAD LOCA W/LOOP	LOOP	LOCA
24J15	Incoming Line, 2000A			
24J14	MCC 2J1-1, 600A	173.9	154.5	173.9
24J13	MCC 2J1-2, 600A	215.7	239.6	215.7
	TOTALS	389.6	394.1	389.6

NOTES:

(1) Spare cubicles exist in the new substation that are not presently filled.

(2) For detailed breakdown of loads on above, reference Appendix B.

3.0 Voltage Analysis; 480 Volt Safety Buses

The following voltage range was calculated for the 4 kV safety buses 2H and 2J, which feed the 480 V safety-related load centers. The calculations are included in Appendix A and the results are summarized below:

Voltage levels are on a 4,000 volt base.

4 kV safety bus 2H; minimum = 0.9848 p.u.
maximum = 1.0690 p.u.

4 kV safety bus 2J; minimum = 0.9911 p.u.
maximum = 1.0690 p.u.

Using the load tabulations of Section 2.0, the following voltage profiles for 480 V safety bus H and J were calculated for maximum and minimum 4 kV bus levels:

1. Voltage profiles for maximum steady state loading on 480 V buses 2H, 2J, 2H1, and 2J1.

2. Voltage profile for starting the largest safety-related 300 hp motor on buses 2H and 2J while bus is at maximum load.

3. Light load voltage profile for 480 V buses 2H, 2H1, 2J, 2J1 using highest voltages on the 4 kV input buses.

   The calculations examine the highest grid voltage with light loading of the buses and the lowest grid voltage with the heaviest loading of these buses. These two conditions bound the bus voltage range for the load centers. If the motor voltage remains within equipment design range at these bounds, then it remains within this design range for all voltages.

3.1 Program Data

Calculations were run on Stone & Webster program 6995 - Station Service System Calculations; Input Data Sheet 11. This program is used to determine running (steady state) motor voltage and motor starting voltage for any chosen load center primary voltage.

Data

a. Safety-related motors for Surry Power Station were specified and purchased with 70 percent starting nameplate voltage.

b. Motor nameplate is 460 V.

c. Design operating range of motors is 460 V $\pm$ 10 percent.

d. Load centers transformers are 1,000/1,333 kVA, 4,160 V, 480 V. Primary tap at 4,056 V.

e. Load center transformers impedance is 8 percent on 1,000 kVA.

f. Review of manufacturers motor data on motors fed from the 480 V load centers indicates starting power factors of 0.26 and above. A power factor of 0.25 was used for motor starting calculations.

g. Locked rotor current for motor starting was taken from motor data.

3.2 Voltage Profile - Maximum Steady State Bus Loading

The voltage profiles for maximum bus loading were computed as outlined below.

For each run, motor running voltage was computed for the maximum and minimum grid voltage conditions computed in Appendix A. Grid low voltage (on 36.5 kV bus) will give lowest motor running voltage. Maximum loading for buses is given in Section 2.0.

3.2.1 Run No. 1101 - 480 V Bus 2H - maximum loading

Grid low - motor running voltage = 92.67 percent of 460 V

3.2.2 Run No. 1103 - 480 V Bus 2H1 - maximum loading

Grid low - motor running voltage = 95.60 percent of 460 V

3.2.3 Run No. 1105 - 480 V Bus 2J - maximum loading

Grid low - motor running voltage = 93.37 percent of 460 V

3.2.4 Run No. 1107 - 480 V Bus 2J1 - maximum loading

Grid low - motor running voltage = 97.19 percent of 460 V

3.3 Voltage Profile - Motor Starting

All large 480 V safety-related motors are fed from load centers 2H and 2J. Maximum loading on these switchgears occurs during Safety Injection (LOCA) conditions. Worst voltage starting condition is starting the last motor with the load center at maximum load. This motor, the largest on the bus, would be the 300 hp outside Recirculation Pump Motor which starts 5 minutes after containment hi-hi pressure signal. If this motor starting voltage remains above 70 percent of nameplate, than all other motors on this load center will have a minimum of 70 percent starting voltage.

3.3.1 Run No. 1102 - Load Center 2H - starting 300 hp 2-RS-P-2A

Motor leads impedance from cable schedule data is 0.0089 + j 0.0085 ohms/phase (from Stone & Webster Cable Impedance Calculations)

Grid low - motor starting voltage - 75.25 percent of 460 V

3.3.2 Run No. 1106 - Load Center 2J - starting 300 hp 2-RS-P-2B

Motor leads impedance from cable schedule data is 0.0124 + j 0.0115 ohms/phase (from Stone & Webster Cable Impedance Calculations)

Grid low - motor starting voltage - 74.07 percent of 460 V

3.4 Light Load Analysis - Voltage Profile

Highest voltage seen at 480 V load centers would occur at load center light loading, Reserve Station Service transformer light loading, and switchyard grid high voltage.

From Appendix A light loading voltages at high grid voltage are as follows:

4 kV Bus 2H light load = 1.0690 p.u. at 4,000 V
4 kV Bus 2J light load = 1.0690 p.u. at 4,000 V

3.4.1 Run No. 1104 - Light Load 480 V - Load Centers 2H and 2H1

Minimum loading condition on buses is conservatively estimated as 100 kVA.

Grid high - light load - motor running voltage = 106.89 percent of 460 V

3.4.2 Run No. 1108 - Light Load 480 V - Load Centers 2J and 2J1

Minimum loading condition on buses is conservatively estimated as 100 kVA.

Grid high - light load - motor running voltage = 106.89 percent of 460 V

3.5 Summary of Voltage Calculations

The 480 V safety load center voltage remains within the equipment design range of ± 10 percent of 460 V at the motor terminals for 4 kV transfer bus heavy and light load voltage conditions.

Motor starting voltage, for safety-related motors, remains above 70 percent for transfer bus heavy and light load conditions and switchyard high and low grid voltage.

With the lightest loading on safety buses and high switchyard grid voltage, equipment terminal voltages remain within 10 percent of name-plate rating.

480V BUS 2H FED FROM RSS B MAXIMUM LOADING
UNIT 1 AT 100% POWER; UNIT 2 TRIP WITH CLS SIGNAL

DATA SHEET 11

STATION SERVICE SYSTEM CALCULATIONS

Starting Voltage - Low Voltage Motors

X JOB ORDER NO. 12846.2 CLIENT VEPCO PLANT SURRY UNIT 2

RUN NO. 1101 BY D. Agneta DATE 1/18/80

.000000006995ex0 PROGRAM VERIFICATION NO. REVIEWED BY CBB

DATE 1/29/80

* 1 HP MOTOR BEING STARTED

* 460 V. MOTOR NAMEPLATE

MOTOR LEADS

** 1 AMP. LOCKED ROTOR CURRENT R = * X = * OHMS/PHASE

** .25 PF OF LOCKED ROTOR CURRENT

* 1000 KVA TRANSFORMER, STEP-DOWN TO MOTOR VOLTAGE

* 8.00 PER CENT IMPEDANCE VOLTS, STEP-DOWN TRANSFORMER

* 1002 KVA PRIOR LOAD ON TRANSFORMER SECONDARY

** .85 PF, PRIOR LOAD

* 163 MVA MIN. SHORT CIRCUIT AVAILABLE AT TRANSF. PRI. TERMINALS

NOM. PRI. VOLTAGE:* 4000 V; PRI. TAP:** RECOM.* 4056 CHOSEN

(7) PRI. VOLTAGE LOADED, %	(8) SEC. VOLTAGE LOADED, PU	(9) MOTOR STARTING VOLTAGE, %	(10) MOTOR RUNNING VOLTAGE, %
110.00	1.0789		105.28
100.00	.9695		94.35
95.00	.9142		88.82
96.06	.9260		90.00
SWITCHYARD LOW VOLTAGE			
98.48	.9528		92.67

(7) NOM. PRI. VOLTAGE BASE

(8) (9) (10) MOTOR NAMEPLATE VOLTAGE BASE

480V BUS 2H STARTING LARGEST MOTOR 2-RS-P-2A

DATA SHEET 11

STATION SERVICE SYSTEM CALCULATIONS

Starting Voltage - Low Voltage Motors

X JOB ORDER NO. 12846.23 CLIENT VEPCO PLANT SURRY UNIT 2

RUN NO. 1102 BY D.F. Ignetis DATE 1/18/80

.000000006995ex0 PROGRAM VERIFICATION NO. REVIEWED BY CBB

DATE 1/29/80

* 300 HP MOTOR BEING STARTED

* 460 V. MOTOR NAMEPLATE

MOTOR LEADS

** 2450 AMP. LOCKED ROTOR CURRENT R = *.0089 X = *.0085 OHMS/PHASE

** .25 PF OF LOCKED ROTOR CURRENT

* 1000 KVA TRANSFORMER, STEP-DOWN TO MOTOR VOLTAGE

* 8.00 PER CENT IMPEDANCE VOLTS, STEP-DOWN TRANSFORMER

* 725 KVA PRIOR LOAD ON TRANSFORMER SECONDARY

** .85 PF, PRIOR LOAD

* 163 MVA MIN. SHORT CIRCUIT AVAILABLE AT TRANSF. PRI. TERMINALS

NOM. PRI. VOLTAGE:* 4000 V; PRI. TAP:** RECOM.* 4056 CHOSEN

(7) PRI. VOLTAGE LOADED, %	(8) SEC. VOLTAGE LOADED, PU	(9) MOTOR STARTING VOLTAGE, %	(10) MOTOR RUNNING VOLTAGE, %
110.00	.9346	85.11	
100.00	.8406	76.55	
95.00	.7932	72.24	
104.01	.8785	80.00	
SWITCHYARD LOW VOLTAGE			
98.48	.8262	75.25	

(7) NOM. PRI. VOLTAGE BASE

(8) (9) (10) MOTOR NAMEPLATE VOLTAGE BASE

DATA SHEET 11

STATION SERVICE SYSTEM CALCULATIONS

Starting Voltage - Low Voltage Motors

X JOB ORDER NO. 12846.23 CLIENT VEPCO PLANT SURRY UNIT 2

RUN NO. 1103 BY D. Agneto DATE 1/18/80

.000000006995ex0 PROGRAM VERIFICATION NO. REVIEWED BY GBB

DATE 1/29/80

* 1 HP MOTOR BEING STARTED

* 460 V. MOTOR NAMEPLATE

** 1 AMP. LOCKED ROTOR CURRENT R = * MOTOR LEADS X = * OHMS/PHASE

** .25 PF OF LOCKED ROTOR CURRENT

* 1000 KVA TRANSFORMER, STEP-DOWN TO MOTOR VOLTAGE

* 8.00 PER CENT IMPEDANCE VOLTS, STEP-DOWN TRANSFORMER

* 544 KVA PRIOR LOAD ON TRANSFORMER SECONDARY

** .85 PF, PRIOR LOAD

* 163 MVA MIN. SHORT CIRCUIT AVAILABLE AT TRANSF. PRI. TERMINALS

NOM. PRI. VOLTAGE:* 4000 V; PRI. TAP:** RECOM.* 4056 CHOSEN

(7) PRI. VOLTAGE LOADED, %	(8) SEC. VOLTAGE LOADED, PU	(9) MOTOR STARTING VOLTAGE, %	(10) MOTOR RUNNING VOLTAGE, %
110.00	1.1042		107.81
100.00	.9982		97.22
95.00	.9450		91.89
93.22	.9260		90.00
SWITCHYARD LOW VOLTAGE			
98.48	.9821		95.60

(7) NOM. PRI. VOLTAGE BASE

(8) (9) (10) MOTOR NAMEPLATE VOLTAGE BASE

480V BUS 2H & 2H-1 LIGHT LOAD CONDITION

DATA SHEET 11

STATION SERVICE SYSTEM CALCULATIONS

Starting Voltage - Low Voltage Motors

X JOB ORDER NO. 12846.23 CLIENT VEPCO PLANT SURRY UNIT 2

RUN NO. 1104 BY D. F. Ignata DATE 1/18/80

.000000006995ex0 PROGRAM VERIFICATION NO. REVIEWED BY [illegible]

DATE 1/29/80

* 1 HP MOTOR BEING STARTED

* 460 V. MOTOR NAMEPLATE

** 1 AMP. LOCKED ROTOR CURRENT R = * MOTOR LEADS X = * OHMS/PHASE

** .25 PF OF LOCKED ROTOR CURRENT

* 1000 KVA TRANSFORMER, STEP-DOWN TO MOTOR VOLTAGE

* 8.00 PER CENT IMPEDANCE VOLTS, STEP-DOWN TRANSFORMER

* 100 KVA PRIOR LOAD ON TRANSFORMER SECONDARY

** .85 PF, PRIOR LOAD

* 163 MVA MIN. SHORT CIRCUIT AVAILABLE AT TRANSF. PRI. TERMINALS

NOM. PRI. VOLTAGE:* 4000 V; PRI. TAP:** RECOM.* 4056 CHOSEN

(7) PRI. VOLTAGE LOADED, %	(8) SEC. VOLTAGE LOADED, PU	(9) MOTOR STARTING VOLTAGE, %	(10) MOTOR RUNNING VOLTAGE, %
110.00	1.1269		110.09
100.00	1.0235		99.75
SWITCHYARD HIGH VOLTAGE			
106.90	1.0949		106.89

(7) NOM. PRI. VOLTAGE BASE

(8) (9) (10) MOTOR NAMEPLATE VOLTAGE BASE

480V BUS 2J MAXIMUM LOADING CONDITION

DATA SHEET 11

STATION SERVICE SYSTEM CALCULATIONS

Starting Voltage - Low Voltage Motors

X JOB ORDER NO. 12846.23 CLIENT VEPCO PLANT SURRY UNIT 2

RUN NO. 1105 BY D. F. Ignetto DATE 1/18/80

.000000006995ex0 PROGRAM VERIFICATION NO. REVIEWED BY CAB

DATE 1/29/80

* 1 HP MOTOR BEING STARTED

* 460 V. MOTOR NAMEPLATE

MOTOR LEADS

** 1 AMP. LOCKED ROTOR CURRENT R = * X = * OHMS/PHASE

** .25 PF OF LOCKED ROTOR CURRENT

* 1000 KVA TRANSFORMER, STEP-DOWN TO MOTOR VOLTAGE

* 8.00 PER CENT IMPEDANCE VOLTS, STEP-DOWN TRANSFORMER

* 1002 KVA PRIOR LOAD ON TRANSFORMER SECONDARY

** .85 PF, PRIOR LOAD

* 170 MVA MIN. SHORT CIRCUIT AVAILABLE AT TRANSF. PRI. TERMINALS

NOM. PRI. VOLTAGE:* 4000 V; PRI. TAP:** RECOM.* 4056 CHOSEN

(7) PRI. VOLTAGE LOADED, %	(8) SEC. VOLTAGE LOADED, PU	(9) MOTOR STARTING VOLTAGE, %	(10) MOTOR RUNNING VOLTAGE, %
110.00	1.0789		105.28
100.00	.9695		94.35
95.00	.9142		88.82
96.06	.9260		90.00
SWITCHYARD LOW VOLTAGE			
99.11	.9597		93.37

(7) NOM. PRI. VOLTAGE BASE

(8) (9) (10) MOTOR NAMEPLATE VOLTAGE BASE

480V bus 2J STARTING LARGEST MOTOR 2-RS-P-2B

DATA SHEET 11

STATION SERVICE SYSTEM CALCULATIONS

Starting Voltage - Low Voltage Motors

X JOB ORDER NO. 12846.23 CLIENT VEPCO PLANT SURRY UNIT 2

RUN NO. 1106 BY D.F. Ignetti DATE 1/18/80

.000000006995ex0 PROGRAM VERIFICATION NO. REVIEWED BY GPB

DATE 1/29/80

* 300 HP MOTOR BEING STARTED

* 460 V. MOTOR NAMEPLATE

MOTOR LEADS

** 2450 AMP. LOCKED ROTOR CURRENT R = *.0124 X = *.0115 OHMS/PHASE

** .25 PF OF LOCKED ROTOR CURRENT

* 1000 KVA TRANSFORMER, STEP-DOWN TO MOTOR VOLTAGE

* 8.00 PER CENT IMPEDANCE VOLTS, STEP-DOWN TRANSFORMER

* 725 KVA PRIOR LOAD ON TRANSFORMER SECONDARY

** .85 PF, PRIOR LOAD

* 170 MVA MIN. SHORT CIRCUIT AVAILABLE AT TRANSF. PRI. TERMINALS

NOM. PRI. VOLTAGE:* 4000 V; PRI. TAP:** RECOM.* 4056 CHOSEN

(7) PRI. VOLTAGE LOADED, %	(8) SEC. VOLTAGE LOADED, PU	(9) MOTOR STARTING VOLTAGE, %	(10) MOTOR RUNNING VOLTAGE, %
110.00	.9435	83.17	
100.00	.8488	74.82	
95.00	.8010	70.61	
106.18	.9076	80.00	
SWITCHYARD LOW VOLTAGE			
99.11	.8403	74.07	

(7) NOM. PRI. VOLTAGE BASE

(8) (9) (10) MOTOR NAMEPLATE VOLTAGE BASE

480V BUS 2J-1 (new) HEAVY LOAD CONDITION

DATA SHEET 11

STATION SERVICE SYSTEM CALCULATIONS

Starting Voltage - Low Voltage Motors

X JOB ORDER NO. 12846.23 CLIENT VEPCO PLANT SURRY Unit 2

RUN NO. 1107 BY D.F. Ignetto DATE 1/18/80

.000000006995ex0 PROGRAM VERIFICATION NO. REVIEWED BY GBB

DATE 1/21/80

* 1 HP MOTOR BEING STARTED

* 460 V. MOTOR NAMEPLATE

MOTOR LEADS

** 1 AMP. LOCKED ROTOR CURRENT R = * X = * OHMS/PHASE

** .25 PF OF LOCKED ROTOR CURRENT

* 1000 KVA TRANSFORMER, STEP-DOWN TO MOTOR VOLTAGE

* 8.00 PER CENT IMPEDANCE VOLTS, STEP-DOWN TRANSFORMER

* 390 KVA PRIOR LOAD ON TRANSFORMER SECONDARY

** .85 PF, PRIOR LOAD

* 170 MVA MIN. SHORT CIRCUIT AVAILABLE AT TRANSF. PRI. TERMINALS

NOM. PRI. VOLTAGE:* 4000 V; PRI. TAP:** RECOM.* 4056 CHOSEN

(7) PRI. VOLTAGE LOADED, %	(8) SEC. VOLTAGE LOADED, PU	(9) MOTOR STARTING VOLTAGE, %	(10) MOTOR RUNNING VOLTAGE, %
110.00	1.1123		108.62
100.00	1.0073		98.12
SWITCHYARD LOW VOLTAGE			
99.11	.9979		97.19

(7) NOM. PRI. VOLTAGE BASE

(8) (9) (10) MOTOR NAMEPLATE VOLTAGE BASE

480V BUSES 2J & 2J-1 LIGHT LOAD CONDITION

DATA SHEET 11

STATION SERVICE SYSTEM CALCULATIONS

Starting Voltage - Low Voltage Motors

X JOB ORDER NO. 12846.23 CLIENT VEPCO PLANT SURRY UNIT 2

RUN NO. 1108 BY D.F. Agnetis DATE 1/18/80

.000000006995ex0 PROGRAM VERIFICATION NO. REVIEWED BY GBB

DATE 1/29/80

* 1 HP MOTOR BEING STARTED

* 460 V. MOTOR NAMEPLATE

MOTOR LEADS

** 1 AMP. LOCKED ROTOR CURRENT R = * X = * OHMS/PHASE

** .25 PF OF LOCKED ROTOR CURRENT

* 1000 KVA TRANSFORMER, STEP-DOWN TO MOTOR VOLTAGE

* 8.00 PER CENT IMPEDANCE VOLTS, STEP-DOWN TRANSFORMER

* 100 KVA PRIOR LOAD ON TRANSFORMER SECONDARY

** .85 PF, PRIOR LOAD

* 170 MVA MIN. SHORT CIRCUIT AVAILABLE AT TRANSF. PRI. TERMINALS

NOM. PRI. VOLTAGE:* 4000 V; PRI. TAP:** RECOM.* 4056 CHOSEN

(7) PRI. VOLTAGE LOADED, %	(8) SEC. VOLTAGE LOADED, PU	(9) MOTOR STARTING VOLTAGE, %	(10) MOTOR RUNNING VOLTAGE, %
110.00	1.1269		110.09
100.00	1.0235		99.75
SWITCHYARD HIGH VOLTAGE			
106.90	1.0949		106.89

(7) NOM. PRI. VOLTAGE BASE

(8) (9) (10) MOTOR NAMEPLATE VOLTAGE BASE

4.0 Feeder Cables to New Load Centers 2H1 and 2J1

4.1 Data

Voltage 4 kV nominal.

Cable identification:	2J7PH2 to 2J1 2H7PH2 to 2H1
Cable lengths:	2J7PH2 = 60 feet 2H7PH2 = 40 feet
Cable type:	3/C 500 MCM aluminum cable with aluminum armor 90°C rate 5 kV
Cable impedance:	0.0461 + j 0.0300 ohms/1000 ft - from Stone & Webster Cable Impedance Calculations August 24, 1976.
Cable ampacity:	425 amps - from IPCEA P-46-426; 1962

4.2 Ampacity

Load center 2J1 and 2H1 maximum loadings can be taken as their maximum rating on 1,333 kVA. Using lowest allowable bus voltage of 0.90 x 4000 = 3,600 V. Maximum current = 214 amps.

This is within cable rated cable rate ampacity of 341 amps.

4.3 Cable Voltage Drop

Cable voltage drop will be calculated on the maximum current obtained in Section 4.2 plus the starting current of the largest motor on this bus.

Largest motor is 2-VS-F-60A, starting current is 509 amps. The equivalent transformer primary current, based on transformer turns ratio, 480/4,056 X 509 = 60 amps. Assume starting power factor of 0.25.

Maximum current = 214 amp at 0.85 pf + 60 amps at 0.25 pf

Maximum current = 274 amps at 0.79 pf

V = IZ 3 where V = Voltage drop line to line (vector)
I = Full load current (vector)
Z = Cable impedance (vector)

Cable 2J7PH2

Z = 60 ft x (0.0461 + j 0.0300) ohms/1000 ft
Z = 0.0028 + J 0.0018
I = 274 amps at 37.8°
I = 216 + j 167.9

$V = IZ\sqrt{3}$
$V = (216 + j\ 167.9)\ (0.0028 + j\ 0.0018)\ 1.732$
$V = (0.303 + j\ 0.859)\ (1.732)$

Voltage drop for cable 2J7PH2 = 1.57 volts
Voltage drop = 0.0379 percent

Cable 2H7PH2

Since voltage drop is a linear function with impedance, a ratio of cable lengths will give voltage drop for cable 2H7PH2.

Voltage drop $\frac{40\ ft}{60\ ft} \times 1.57\ V = 1.05\ V$ or 0.025 percent

APPENDIX A

STATION SERVICE SYSTEM CALCULATIONS

This appendix is a calculation of the voltage profile for the Unit 2 4,160 V emergency buses. The redundant emergency 4,160 V buses 2H and 2J are fed from the Reserve Station Service Transformers B and C, respectively. Reserve Station Service Transformers are supplied from separate 36.5 kV switchyard buses.

Calculation of light loading and heavy loading conditions on the Reserve Transformer system is used to determine the voltage profile of the 4,160 V emergency buses.

Data for Calculations

1. Reserve Station Service Transformer B

Rating 18,000/24,000/30,000 kVA OA/FA/FA

Nominal 34.5 kV Primary to 4,160 V Secondary

Impedance = 5.50 percent nominal at 18,000 kVA

Resistance = 0.393 percent nominal at 18,000 kVA

"No load" primary taps:	Tap 1	36,200 V
	Tap 2	35,300 V
	Tap 3	34,400 V
	Tap 4	33,500 V
	Tap 5	32,600 V
Primary tap in use:	Tap 3	34,400 V

Secondary load tap changer 16 raise steps
16 lower steps

Maximum raise (boost)	4,670 V
Neutral	4,154 V
Minimun lower (buck)	3,740 V

The secondary is currently set to maintain 4,300 V at the transfer buses with a 30-second time delay.

2. Reserve Station Service Transformer C

All data are the same as Transformer B.

3. Switchyard Voltage Range (swing)

The Reserve Transformers are supplied from 36.5 kV switchyard buses. These buses are fed from 36.5 kV tertiary windings of the 500 kV to 230 kV auto transformers. The present tap setting on the auto transformers primaries is 512,500 V.

From VEPCO system planning department,

total voltage swing on 500 kV lines:

minimum 505 kV
maximum 520 kV

4. Maximum power flow from 500 kV grid to 230 kV grid from VEPCO system planning:

real = 660.00 MW
reactive = 176.00 MVAR

4 kV Emergency Bus Voltage Profile

Voltage profile calculations were made with Stone & Webster load flow computer program. These computer runs are outlined below:

Run A

Purpose: To determine highest voltage level on the 4,160 V emergency buses 2H and 2J.

Input Conditions 1. Light load on the reserve station service system concurrent with high switchyard grid voltage will result in highest voltage on 4 kV emergency buses. Light load will occur with two units at 100 percent power.

2. Switchyard voltage set at high level of 520 kV.

3. Reserve station service load tap changes in service and set to maintain 4,300 V on transfer buses.

4. Normal operating loads connected to the 4 kV emergency buses.

Results: The attached computer output results for Run A are summarized below:

4 kV Bus 2H maximum voltage = 1.028 p.u. on 4,160 V base

or 1.069 p.u. on 4,000 V base

4 kV Bus 2J maximum voltage = 1.028 p.u. on 4,160 V base

or 1.069 p.u. on 4,000 V base

Load tap changer ratios required to maintain 4,300 V on Transfer Buses D, E, and F under light load condition were calculated as:

Transformer A	1.019 raise
Transformer B	1.010 raise
Transformer C	1.022 raise

Run B

Purpose: To determine lowest voltage on the 4,160 V emergency Buses 2H and 2J for a unit trip with consequence limiting safeguard signal. Lowest voltage will occur immediately after tripping Unit 2 from 100 percent power and before the reserve transformer load tap changer has moved (30 sec time delay) to raise secondary voltage.

Input:

1. Unit 1 at 100 percent power.

2. Unit 2 tripping from 100 percent power with CLS signal. All loads on Unit 2 normal station service buses transfer to reserve station service transformers, when the unit trips.

3. Load tap changers fixed at taps determined in Run A. This approach takes no credit for the load tap changers moving to increase voltage after the trip.

4. The switchyard voltage was assumed to be at its lowest value (505 kV).

Results: The attached computer output sheets for Run B are summarized below. Voltages are those for Unit 2 trip with Unit 1 at 100 percent power.

4 kV Bus 2H minimum voltage = 0.9470 p.u. on 4,160 V base

or 0.9848 p.u. on 4,000 V base

4 kV Bus 2J minimum voltage = 0.953 p.u. on 4,160 V base

or 0.9911 p.u. on 4,000 V base

SURRY RESERVE STATION SERVICE SYSTEM

RUN A

BASE CASE LOADFLOW-100% POWER-NORMAL OPERATION-500KV=1.04PU

SURRY RESERVE STATION SERVICE SYSTEM
TRANSMISSION LINE AND TRANSFORMER ASSEMBLY

GROUP 1 INPUT BASE CONVERTED BASE
AREA 0 0.0 KV 0.0 KV
0. MVA 100. MVA

LINE P	LINE Q	R(PCT)	X(PCT)	KVAC	R (PU)	X (PU)	BC/2	G	B	MVA LOAD	TAP RATIO	TAP-LIMITS TMIN	TAP-LIMITS TMAX
10	12	1.79	1.66	0.0	0.0179	0.0166	0.0	30.0351	27.8538	0			
12	13	160.00	783.00	0.0	1.6000	7.8300	0.0	0.0251	0.1226	0	0.975		
20	22	2.24	2.08	0.0	0.0224	0.0208	0.0	23.9726	22.2603	0			
22	23	160.00	783.00	0.0	1.6000	7.8300	0.0	0.0251	0.1226	0	0.975		
30	32	1.43	1.33	0.0	0.0143	0.0133	0.0	37.4954	34.8734	0			
30	33	1.70	1.58	0.0	0.0170	0.0158	0.0	31.5610	29.3331	0			
32	34	160.00	783.00	0.0	1.6000	7.8300	0.0	0.0251	0.1226	0	0.975		
33	35	160.00	783.00	0.0	1.6000	7.8300	0.0	0.0251	0.1226	0	0.975		
7	3	2.04	27.73	0.0	0.0204	0.2773	0.0	0.2639	3.5868	0	1.000	0.950	1.191
8	3	2.04	28.48	0.0	0.0204	0.2848	0.0	0.2502	3.4933	0	1.000	0.950	1.191
9	4	1.90	28.48	0.0	0.0190	0.2848	0.0	0.2332	3.4957	0	1.000	0.950	1.191
3	5	0.0	15.71	0.0	0.0	0.1571	0.0	0.0	6.3654	0			
2	5	0.0	0.01	0.0	0.0	0.0001	0.0	0.0	10000.0078	0			
1	5	0.0	3.79	0.0	0.0	0.0379	0.0	0.0	26.3852	0	0.975		
1	6	0.0	3.79	0.0	0.0	0.0379	0.0	0.0	26.3852	0	0.975		
2	6	0.0	0.01	0.0	0.0	0.0001	0.0	0.0	10000.0078	0			
4	6	0.0	15.71	0.0	0.0	0.1571	0.0	0.0	6.3654	0			
7	10	0.97	9.25 ✓	0.0	0.0097	0.0925	0.0	1.1213	10.6932	0			
8	20	0.97	9.25 ✓	0.0	0.0097	0.0925	0.0	1.1213	10.6932	0			
9	30	1.02	8.32 ✓	0.0	0.0102	0.0832	0.0	1.4517	11.8413	0			

SURRY RESERVE STATION SERVICE SYSTEM
BASE CASE BUS DATA ENTERED

BUS	NAME	IREG	EA	EB	PG	QG	PL	QL	QMIN	QMAX	BSR*100	NREGD
1	500KV	2	1.040	0.0	0.0	0.0	0.0	0.0	-1000.00	1000.00	0.	0
2	230KV	1	0.970	0.0	0.0	0.0	660.00	176.00	0.0	0.0	0.	0
3	36.5KV 1	0	1.000	0.0	0.0	0.0	7.74	4.18	0.0	0.0	0.	0
4	36.5KV 2	0	1.000	0.0	0.0	0.0	7.74	4.18	0.0	0.0	0.	0
5	TRANS 1	0	1.000	0.0	0.0	0.0	0.0	0.0	0.0	0.0	0.	0
6	TRANS 2	0	1.000	0.0	0.0	0.0	0.0	0.0	0.0	0.0	0.	0
7	4.16 A	0	1.030	0.0	0.0	0.0	0.0	0.0	0.0	0.0	0.	0
8	4.16 B	0	1.030	0.0	0.0	0.0	0.0	0.0	0.0	0.0	0.	0
9	4.16 C	0	1.030	0.0	0.0	0.0	0.0	0.0	0.0	0.0	0.	0
10	BUS D	0	1.000	0.0	0.0	0.0	0.0	0.0	0.0	0.0	0.	0
20	BUS E	0	1.000	0.0	0.0	0.0	0.0	0.0	0.0	0.0	0.	0
30	BUS F	0	1.000	0.0	0.0	0.0	0.0	0.0	0.0	0.0	0.	0
12	BUS 1J	0	1.000	0.0	0.0	0.0	1.26	0.68	0.0	0.0	0.	0
22	BUS 2H	0	1.000	0.0	0.0	0.0	1.30	0.70	0.0	0.0	0.	0
32	BUS 1H	0	1.000	0.0	0.0	0.0	1.31	0.71	0.0	0.0	0.	0
33	BUS 2J	0	1.000	0.0	0.0	0.0	1.26	0.68	0.0	0.0	0.	0
13	BUS 1J1	0	1.000	0.0	0.0	0.0	0.63	0.39	0.0	0.0	0.	0
23	BUS 2H1	0	1.000	0.0	0.0	0.0	0.47	0.29	0.0	0.0	0.	0
34	BUS 1H1	0	1.000	0.0	0.0	0.0	0.56	0.35	0.0	0.0	0.	0
35	BUS 2J1	0	1.000	0.0	0.0	0.0	0.33	0.20	0.0	0.0	0.	0

SURRY RESERVE STATION SERVICE SYSTEM

A COMBINATION OF SOLUTION TECHNIQUES

* OPTIONS IN EFFECT ARE AS FOLLOWS *

ORDERING

FLAT VOLTAGE START

GAUSS-SEIDEL -- NEWTON-RAPHSON

CONTROL PARAMETERS

CUTOFF ITERATIONS	GAUSS / DCLF ITERATIONS	MAXIMUM TAP CHANGE	LOOSEN CRITERIA	SKIP VAR CHECK	P.U. POWER TOLERANCE	P.U. VOLT TOLERANCE
10	60	7	10	0	0.0010	0.0010

THE SOLUTION HAS FAILED TO CONVERGE IN 60 ITERATIONS.

ESTIMATED NO. OF OFF-DIAGONAL ELEMENTS = 18

SURRY RESERVE STATION SERVICE SYSTEM

RECORD OF CONVERGENCE

ITERATION COUNT	MATRIX SIZE	RESIDUES IN MW	RESIDUES IN MVAR	ERROR COUNT	NO. LTC ADJ	REG. BUS EXC. LIM
0	0	1779.616	353.893	15	0	0
1	147	2.464	58.287	4	0	0
2	147	0.361	1.310	3	3	0
3	147	0.101	2.673	5	0	0
4	147	0.224	2.713	3	0	0
5	147	0.208	2.545	3	0	0
6	147	0.129	1.769	3	0	0
7	147	0.308	3.047	3	0	0
8	147	0.123	1.348	3	0	0
9	147	0.080	0.583	1	0	0
10	147	0.445	2.503	0	0	0

S U M M A R Y O F G E N E R A T O R L O A D I N G

	BUS	NAME	VOLTS	ANGLE	GENERATION MW	GENERATION MVAR	LOAD MW	LOAD MVAR	REQ'D VOLTS	MVAR LIMITS MINIMUM	MVAR LIMITS MAXIMUM
SWING	1	500KV	1.040	90.0	682.59	278.63	0.0	0.0			
	1	500KV	1.040	90.0	682.59	278.63	0.0	0.0			

GENERATION SUMMARY	MW	MVARS
GENERATION	682.59	278.63
+ LINE CHARGING		0.0
+ SHUNT CAPACITORS		0.0
+ SHUNT REACTORS		0.0
TOTAL GENERATION	682.59	278.63
- TOTAL LOAD	682.60	188.36
- INTERCHANGE	0.0	0.0
LOSSES	-0.01	90.27

SURRY RESERVE STATION SERVICE SYSTEM

TRANSFORMER SUMMARY

LINE FROM	LINE TO	AREA	TAP-SIDE BUS NO.	TAP-SIDE BUS NAME	TAP-SIDE BUS VOLTS	LINE FLOW MW	LINE FLOW MVAR	PCT LOAD	REQ'D VOLTS	TAP RATIO	TAP LIMITS MINIMUM	TAP LIMITS MAXIMUM	PHASE SHIFT
1	5	0	1	500KV	1.040	341.29	139.32	0		0.975			
1	6	0	1	500KV	1.040	341.29	139.32	0		0.975			
7	3	0	7	4.16 A	1.030	-1.89	-1.11	0	1.030	1.019R	0.950	1.191	
8	3	0	8	4.16 B	1.030	-1.77	-1.01	0	1.030	1.019R	0.950	1.191	
9	4	0	9	4.16 C	1.030	-3.47	-1.99	0	1.030	1.022R	0.950	1.191	
12	13	0	12	BUS 1J	1.028	0.64	0.43	0		0.975			
22	23	0	22	BUS 2H	1.028	0.47	0.31	0		0.975			
32	34	0	32	BUS 1H	1.028	0.57	0.38	0		0.975			
33	35	0	33	BUS 2J	1.028	0.33	0.21	0		0.975			

SURRY RESERVE STATION SERVICE SYSTEM

REPORT OF LOAD FLOW CALCULATIONS TOTAL ITERATIONS = 10, SWING BUS = 1

BUS	NAME	VOLTS	ANGLE	GENERATION MW	GENERATION MVAR	LOAD MW	LOAD MVAR	CAP/REC MVAR	TO BUS	AREA	NAME	MW	MVAR	TAP OR PHASE	PCT LOAD
1	500KV	1.040	90.0	682.6	278.6	0.0	0.0	0.0	5	0	TRANS 1	341.29	139.32	0.975	
									6	0	TRANS 2	341.29	139.32	0.975	
											MISMATCH	0.0	-0.00		
2	230KV	1.024	83.2	0.0	0.0	660.00	176.00	0.0	5	0	TRANS 1	-330.00	-88.45		
									6	0	TRANS 2	-330.18	-88.42		
											MISMATCH	0.17	0.87		
3	36.5KV 1	1.014	82.2	0.0	0.0	7.74	4.18	0.0	5	0	TRANS 1	-11.41	-6.35		
									7	0	4.16 A	1.89	1.13		
									8	0	4.16 B	1.77	1.03		
											MISMATCH	0.00	0.01		
4	36.5KV 2	1.015	82.2	0.0	0.0	7.74	4.18	0.0	6	0	TRANS 2	-11.21	-6.22		
									9	0	4.16 C	3.47	2.04		
											MISMATCH	0.00	0.01		
5	TRANS 1	1.024	83.2	0.0	0.0	0.0	0.0	0.0	1	0	500KV	-341.29	-94.05		
									2	0	230KV	330.00	88.56		
									3	0	36.5KV 1	11.41	6.61		
											MISMATCH	-0.11	-1.11		
6	TRANS 2	1.024	83.2	0.0	0.0	0.0	0.0	0.0	1	0	500KV	-341.29	-94.05		
									2	0	230KV	330.18	88.53		
									4	0	36.5KV 2	11.21	6.48		
											MISMATCH	-0.10	-0.96		
7	4.16 A	1.030	81.9	0.0	0.0	0.0	0.0	0.0	3	0	36.5KV 1	-1.89	-1.11	1.019R	
									10	0	BUS D	1.90	1.11		
											MISMATCH	-0.01	0.00		
8	4.16 B	1.030	81.9	0.0	0.0	0.0	0.0	0.0	3	0	36.5KV 1	-1.77	-1.01	1.019R	
									20	0	BUS E	1.78	1.01		
											MISMATCH	-0.01	0.00		
9	4.16 C	1.030	81.7	0.0	0.0	0.0	0.0	0.0	4	0	36.5KV 2	-3.47	-1.99	1.022R	
									30	0	BUS F	3.47	1.99		
											MISMATCH	-0.01	0.00		
10	BUS D	1.029	81.8	0.0	0.0	0.0	0.0	0.0	7	0	4.16 A	-1.90	-1.11		
									12	0	BUS 1J	1.90	1.11		
											MISMATCH	-0.00	-0.00		
12	BUS 1J	1.028	81.8	0.0	0.0	1.26	0.68	0.0	10	0	BUS D	-1.90	-1.11		
									13	0	BUS 1J1	0.64	0.43	0.975	
											MISMATCH	0.00	-0.00		
13	BUS 1J1	1.014	79.5	0.0	0.0	0.63	0.39	0.0	12	0	BUS 1J	-0.63	-0.39		
											MISMATCH	-0.00	-0.00		

SURRY RESERVE STATION SERVICE SYSTEM

REPORT OF LOAD FLOW CALCULATIONS TOTAL ITERATIONS = 10, SWING BUS = 1

BUS-DATA									LINE-FLOW						
				GENERATION		LOAD		CAP/REC	TO					TAP OR	PCT
BUS	NAME	VOLTS	ANGLE	MW	MVAR	MW	MVAR	MVAR	BUS	AREA	NAME	MW	MVAR	PHASE	LOAD
20	BUS E	1.029	81.9	0.0	0.0	0.0	0.0	0.0	8	0	4.16 B	-1.78	-1.01		
									22	0	BUS 2H	1.78	1.01		
											MISMATCH	-0.00	-0.00		
22	BUS 2H	1.028	81.9	0.0	0.0	1.30	0.70	0.0	20	0	BUS E	-1.78	-1.01		
									23	0	BUS 2H1	0.47	0.31	0.975	
											MISMATCH	0.00	-0.00		
23	BUS 2H1	1.025	80.1	0.0	0.0	0.47	0.29	0.0	22	0	BUS 2H	-0.47	-0.29		
											MISMATCH	0.00	0.00		
30	BUS F	1.028	81.6	0.0	0.0	0.0	0.0	0.0	9	0	4.16 C	-3.47	-1.98		
									32	0	BUS 1H	1.88	1.09		
									33	0	BUS 2J	1.59	0.89		
											MISMATCH	0.00	-0.00		
32	BUS 1H	1.028	81.5	0.0	0.0	1.31	0.71	0.0	30	0	BUS F	-1.88	-1.09		
									34	0	BUS 1H1	0.57	0.38	0.975	
											MISMATCH	-0.00	-0.00		
33	BUS 2J	1.028	81.5	0.0	0.0	1.26	0.68	0.0	30	0	BUS F	-1.59	-0.89		
									35	0	BUS 2J1	0.33	0.21	0.975	
											MISMATCH	-0.00	-0.00		
34	BUS 1H1	1.018	79.5	0.0	0.0	0.56	0.35	0.0	32	0	BUS 1H	-0.56	-0.35		
											MISMATCH	-0.00	-0.00		
35	BUS 2J1	1.034	80.4	0.0	0.0	0.33	0.20	0.0	33	0	BUS 2J	-0.33	-0.20		
											MISMATCH	-0.00	-0.00		

SURRY RESERVE STATION SERVICE SYSTEM

NO. OF ITERATIONS	CUTOFF ITERATIONS	TOLERANCES REAL	TOLERANCES IMAG	ACCELERATION REAL	ACCELERATION IMAG	NO.OF LINES TOTAL	NO.OF LINES MAX.	NO.OF BUSSES TOTAL	NO.OF BUSSES MAX.	NO.OF XFMRS TOTAL	NO.OF XFMRS MAX.	NO.OF LTCS TOTAL	NO.OF LTCS MAX.	NO.REG.BUSSES TOTAL	NO.REG.BUSSES MAX.
10	500	0.0100	0.0100	0.80	0.80	20	3000	35	2000	9	500	3	300	0	500

TOTAL MISMATCH REAL	TOTAL MISMATCH IMAG	MAXIMUM MISMATCH REAL	MAXIMUM MISMATCH IMAG	SYSTEM GENERATION MW	SYSTEM GENERATION MVAR	TOTAL SYSTEM LOAD MW	TOTAL SYSTEM LOAD MVAR	TOTAL LINE FLOWS MW	TOTAL LINE FLOWS MVAR
-0.0	-1.2	0.2	1.1	682.59	278.63	682.60	188.36	0.03	91.47
		2	5						

NUMBER OF BUSSES ACTUALLY IN USE = 20

SURRY RESERVE STATION SERVICE SYSTEM

RUN B

UNIT 2 TRIP W/LOCA ;UNIT 1 AT 100% PWR ; BUS 1=1.0; FIXED TAPS1

SURRY RESERVE STATION SERVICE SYSTEM
TRANSMISSION LINE AND TRANSFORMER ASSEMBLY

GROUP 1 INPUT BASE 0.0 KV 0. MVA — CONVERTED BASE 0.0 KV 100. MVA
AREA 0

LINE P	LINE Q	R(PCT)	X(PCT)	KVAC	R (PU)	X (PU)	BC/2	G	B	MVA LOAD	TAP RATIO	TAP-LIMITS TMIN	TAP-LIMITS TMAX
10	12	1.79	1.66	0.0	0.0179	0.0166	0.0	30.0351	27.8538	0			
12	13	160.00	783.00	0.0	1.6000	7.8300	0.0	0.0251	0.1226	0	0.975		
20	22	2.24	2.08	0.0	0.0224	0.0208	0.0	23.9726	22.2603	0			
22	23	160.00	783.00	0.0	1.6000	7.8300	0.0	0.0251	0.1226	0	0.975		
30	32	1.43	1.33	0.0	0.0143	0.0133	0.0	37.4954	34.8734	0			
30	33	1.70	1.58	0.0	0.0170	0.0158	0.0	31.5610	29.3331	0			
32	34	160.00	783.00	0.0	1.6000	7.8300	0.0	0.0251	0.1226	0	0.975		
33	35	160.00	783.00	0.0	1.6000	7.8300	0.0	0.0251	0.1226	0	0.975		
7	3	2.04	27.73	0.0	0.0204	0.2773	0.0	0.2639	3.5868	0	1.019		
8	3	2.04	28.48	0.0	0.0204	0.2848	0.0	0.2502	3.4933	0	1.019		
9	4	1.90	28.48	0.0	0.0190	0.2848	0.0	0.2332	3.4957	0	1.022		
3	5	0.0	15.71	0.0	0.0	0.1571	0.0	0.0	6.3654	0			
2	5	0.0	0.01	0.0	0.0	0.0001	0.0	0.0	10000.0078	0			
1	5	0.0	3.79	0.0	0.0	0.0379	0.0	0.0	26.3852	0	0.975		
1	6	0.0	3.79	0.0	0.0	0.0379	0.0	0.0	26.3852	0	0.975		
2	6	0.0	0.01	0.0	0.0	0.0001	0.0	0.0	10000.0078	0			
4	6	0.0	15.71	0.0	0.0	0.1571	0.0	0.0	6.3654	0			
7	10	0.97	9.25	0.0	0.0097	0.0925	0.0	1.1213	10.6932	0			
8	20	0.97	9.25	0.0	0.0097	0.0925	0.0	1.1213	10.6932	0			
9	30	1.02	8.32	0.0	0.0102	0.0832	0.0	1.4517	11.8413	0			

SURRY RESERVE STATION SERVICE SYSTEM
BASE CASE BUS DATA ENTERED

BUS	NAME	IREG	EA	EB	PG	QG	PL	QL	QMIN	QMAX	BSR*100	NREGD
1	500KV	2	1.010	0.0	0.0	0.0	0.0	0.0	-1000.00	1000.00	0.	0
2	230KV	1	0.970	0.0	0.0	0.0	660.00	176.00	0.0	0.0	0.	0
3	36.5KV 1	0	1.000	0.0	0.0	0.0	7.74	4.18	0.0	0.0	0.	0
4	36.5KV 2	0	1.000	0.0	0.0	0.0	7.74	4.18	0.0	0.0	0.	0
5	TRANS 1	0	1.000	0.0	0.0	0.0	0.0	0.0	0.0	0.0	0.	0
6	TRANS 2	0	1.000	0.0	0.0	0.0	0.0	0.0	0.0	0.0	0.	0
7	4.16 A	0	1.030	0.0	0.0	0.0	7.83	4.23	0.0	0.0	0.	0
8	4.16 B	0	1.030	0.0	0.0	0.0	9.84	5.31	0.0	0.0	0.	0
9	4.16 C	0	1.030	0.0	0.0	0.0	10.11	5.46	0.0	0.0	0.	0
10	BUS D	0	1.000	0.0	0.0	0.0	0.0	0.0	0.0	0.0	0.	0
20	BUS E	0	1.000	0.0	0.0	0.0	0.0	0.0	0.0	0.0	0.	0
30	BUS F	0	1.000	0.0	0.0	0.0	0.0	0.0	0.0	0.0	0.	0
12	BUS 1J	0	1.000	0.0	0.0	0.0	1.26	0.68	0.0	0.0	0.	0
22	BUS 2H	0	1.000	0.0	0.0	0.0	2.58	1.60	0.0	0.0	0.	0
32	BUS 1H	0	1.000	0.0	0.0	0.0	1.31	0.71	0.0	0.0	0.	0
33	BUS 2J	0	1.000	0.0	0.0	0.0	2.44	1.52	0.0	0.0	0.	0
13	BUS 1J1	0	1.000	0.0	0.0	0.0	0.63	0.39	0.0	0.0	0.	0
23	BUS 2H1	0	1.000	0.0	0.0	0.0	0.0	0.0	0.0	0.0	0.	0
34	BUS 1H1	0	1.000	0.0	0.0	0.0	0.56	0.35	0.0	0.0	0.	0
35	BUS 2J1	0	1.000	0.0	0.0	0.0	0.0	0.0	0.0	0.0	0.	0

SURRY RESERVE STATION SERVICE SYSTEM

A COMBINATION OF SOLUTION TECHNIQUES

* OPTIONS IN EFFECT ARE AS FOLLOWS *

ORDERING

FLAT VOLTAGE START

GAUSS-SEIDEL -- NEWTON-RAPHSON

CONTROL PARAMETERS

CUTOFF ITERATIONS	GAUSS / DCLF ITERATIONS	MAXIMUM TAP CHANGE	LOOSEN CRITERIA	SKIP VAR CHECK	P.U. POWER TOLERANCE	P.U. VOLT TOLERANCE
10	90	7	10	0	0.0010	0.0010

THE SOLUTION HAS FAILED TO CONVERGE IN 90 ITERATIONS.

ESTIMATED NO. OF OFF-DIAGONAL ELEMENTS = 18

SURRY RESERVE STATION SERVICE SYSTEM

RECORD OF CONVERGENCE

ITERATION COUNT	MATRIX SIZE	RESIDUES IN MW	RESIDUES IN MVAR	ERROR COUNT	NO. LTC ADJ	REG. BUS EXC. LIM
0	0	906.856	183.210	15	0	0
1	147	1.866	17.455	3	0	0
2	147	0.098	0.584	2	0	0
3	147	0.121	0.328	2	0	0
4	147	0.129	0.771	3	0	0
5	147	0.127	0.983	3	0	0
6	147	0.176	0.344	2	0	0
7	147	0.085	0.672	3	0	0
8	147	0.030	0.317	1	0	0
9	147	0.121	0.452	2	0	0
10	147	0.114	0.589	0	0	0

S U M M A R Y O F G E N E R A T O R L O A D I N G

	BUS	NAME	VOLTS	ANGLE	GENERATION MW	GENERATION MVAR	LOAD MW	LOAD MVAR	REQ'D VOLTS	MVAR LIMITS MINIMUM	MVAR LIMITS MAXIMUM
SWING	1	500KV	1.010	90.0	712.08	315.31	0.0	0.0			
	1	500KV	1.010	90.0	712.08	315.31	0.0	0.0			

GENERATION SUMMARY	MW	MVARS
GENERATION	712.08	315.31
+ LINE CHARGING		0.0
+ SHUNT CAPACITORS		0.0
+ SHUNT REACTORS		0.0
TOTAL GENERATION	712.08	315.31
- TOTAL LOAD	712.04	204.61
- INTERCHANGE	0.0	0.0
LOSSES	0.04	110.70

TRANSFORMER SUMMARY

LINE FROM	LINE TO	AREA	TAP-SIDE BUS NO.	TAP-SIDE BUS NAME	TAP-SIDE BUS VOLTS	LINE FLOW MW	LINE FLOW MVAR	PCT LOAD	REQ'D VOLTS	TAP RATIO	TAP LIMITS MINIMUM	TAP LIMITS MAXIMUM	PHASE SHIFT
1	5	0	1	500KV	1.010	356.05	157.66	0		0.975			
1	6	0	1	500KV	1.010	356.03	157.65	0		0.975			
7	3	0	7	4.16 A	0.956	-9.73	-5.36	0		1.019			
8	3	0	8	4.16 B	0.950	-12.42	-6.92	0		1.019			
9	4	0	9	4.16 C	0.957	-14.43	-8.10	0		1.022			
12	13	0	12	BUS 1J	0.955	0.64	0.44	0		0.975			
22	23	0	22	BUS 2H	0.947	0.00	0.00	0		0.975			
32	34	0	32	BUS 1H	0.954	0.57	0.39	0		0.975			
33	35	0	33	BUS 2J	0.953	0.00	0.00	0		0.975			

SURRY RESERVE STATION SERVICE SYSTEM

REPORT OF LOAD FLOW CALCULATIONS TOTAL ITERATIONS = 10, SWING BUS = 1

BUS-DATA									LINE-FLOW						
BUS	NAME	VOLTS	ANGLE	GENERATION MW	GENERATION MVAR	LOAD MW	LOAD MVAR	CAP/REC MVAR	TO BUS	AREA	NAME	MW	MVAR	TAP OR PHASE	PCT LOAD
1	500KV	1.010	90.0	712.1	315.3	0.0	0.0	0.0	5	0	TRANS 1	356.05	157.66	0.975	
									6	0	TRANS 2	356.03	157.65	0.975	
											MISMATCH	0.0	-0.00		
2	230KV	0.987	82.4	0.0	0.0	660.00	176.00	0.0	5	0	TRANS 1	-326.14	-85.52		
									6	0	TRANS 2	-333.87	-90.54		
											MISMATCH	0.02	0.05		
3	36.5KV 1	0.957	79.6	0.0	0.0	7.74	4.18	0.0	5	0	TRANS 1	-29.97	-17.51		
									7	0	4.16 A	9.76	5.74		
									8	0	4.16 B	12.47	7.58		
											MISMATCH	0.00	0.00		
4	36.5KV 2	0.965	80.3	0.0	0.0	7.74	4.18	0.0	6	0	TRANS 2	-22.23	-13.17		
									9	0	4.16 C	14.49	8.99		
											MISMATCH	0.00	0.00		
5	TRANS 1	0.987	82.4	0.0	0.0	0.0	0.0	0.0	1	0	500KV	-356.05	-104.11		
									2	0	230KV	326.14	85.63		
									3	0	36.5KV 1	29.97	19.57		
											MISMATCH	-0.06	-1.09		
6	TRANS 2	0.987	82.4	0.0	0.0	0.0	0.0	0.0	1	0	500KV	-356.03	-104.10		
									2	0	230KV	333.87	90.66		
									4	0	36.5KV 2	22.23	14.30		
											MISMATCH	-0.08	-0.86		
7	4.16 A	0.956	77.9	0.0	0.0	7.83	4.23	0.0	3	0	36.5KV 1	-9.73	-5.36	1.019	
									10	0	BUS D	1.90	1.13		
											MISMATCH	-0.00	-0.00		
8	4.16 B	0.950	77.4	0.0	0.0	9.84	5.31	0.0	3	0	36.5KV 1	-12.42	-6.92	1.019	
									20	0	BUS E	2.58	1.61		
											MISMATCH	0.00	0.00		
9	4.16 C	0.957	77.8	0.0	0.0	10.11	5.46	0.0	4	0	36.5KV 2	-14.43	-8.10	1.022	
									30	0	BUS F	4.32	2.64		
											MISMATCH	-0.00	-0.00		
10	BUS D	0.955	77.8	0.0	0.0	0.0	0.0	0.0	7	0	4.16 A	-1.90	-1.12		
									12	0	BUS 1J	1.90	1.12		
											MISMATCH	-0.00	0.00		
12	BUS 1J	0.955	77.8	0.0	0.0	1.26	0.68	0.0	10	0	BUS D	-1.90	-1.12		
									13	0	BUS 1J1	0.64	0.44	0.975	
											MISMATCH	-0.00	-0.00		
13	BUS 1J1	0.934	75.1	0.0	0.0	0.63	0.39	0.0	12	0	BUS 1J	-0.63	-0.39		
											MISMATCH	0.00	0.00		

SURRY RESERVE STATION SERVICE SYSTEM

REPORT OF LOAD FLOW CALCULATIONS TOTAL ITERATIONS = 10, SWING BUS = 1

BUS	NAME	VOLTS	ANGLE	GENERATION MW	GENERATION MVAR	LOAD MW	LOAD MVAR	CAP/REC MVAR	TO BUS	AREA	NAME	MW	MVAR	TAP OR PHASE	PCT LOAD
20	BUS E	0.948	77.2	0.0	0.0	0.0	0.0	0.0	8	0	4.16 B	-2.58	-1.60		
									22	0	BUS 2H	2.58	1.60		
											MISMATCH	-0.00	-0.00		
22	BUS 2H	0.947	77.2	0.0	0.0	2.58	1.60	0.0	20	0	BUS E	-2.58	-1.60		
									23	0	BUS 2H1	0.00	0.00	0.975	
											MISMATCH	-0.00	-0.00		
23	BUS 2H1	0.972	77.2	0.0	0.0	0.0	0.0	0.0	22	0	BUS 2H	-0.00	-0.00		
											MISMATCH	0.00	0.00		
30	BUS F	0.954	77.6	0.0	0.0	0.0	0.0	0.0	9	0	4.16 C	-4.32	-2.62		
									32	0	BUS 1H	1.88	1.10		
									33	0	BUS 2J	2.44	1.52		
											MISMATCH	0.00	0.00		
32	BUS 1H	0.954	77.6	0.0	0.0	1.31	0.71	0.0	30	0	BUS F	-1.88	-1.10		
									34	0	BUS 1H1	0.57	0.39	0.975	
											MISMATCH	-0.00	-0.00		
33	BUS 2J	0.953	77.6	0.0	0.0	2.44	1.52	0.0	30	0	BUS F	-2.44	-1.52		
									35	0	BUS 2J1	0.00	0.00	0.975	
											MISMATCH	0.00	-0.00		
34	BUS 1H1	0.938	75.2	0.0	0.0	0.56	0.35	0.0	32	0	BUS 1H	-0.56	-0.35		
											MISMATCH	0.00	0.00		
35	BUS 2J1	0.978	77.6	0.0	0.0	0.0	0.0	0.0	33	0	BUS 2J	-0.00	-0.00		
											MISMATCH	0.00	0.00		

SURRY RESERVE STATION SERVICE SYSTEM

NO. OF ITERATIONS	CUTOFF ITERATIONS	TOLERANCES REAL	TOLERANCES IMAG	ACCELERATION REAL	ACCELERATION IMAG	NO.OF LINES TOTAL	NO.OF LINES MAX.	NO.OF BUSSES TOTAL	NO.OF BUSSES MAX.	NO.OF XFMRS TOTAL	NO.OF XFMRS MAX.	NO.OF LTCS TOTAL	NO.OF LTCS MAX.	NO.REG.BUSSES TOTAL	NO.REG.BUSSES MAX.
10	500	0.0100	0.0100	0.80	0.80	20	3000	35	2000	9	500	0	300	0	500

TOTAL MISMATCH REAL	TOTAL MISMATCH IMAG	MAXIMUM MISMATCH REAL	MAXIMUM MISMATCH IMAG	SYSTEM GENERATION MW	SYSTEM GENERATION MVAR	TOTAL SYSTEM LOAD MW	TOTAL SYSTEM LOAD MVAR	TOTAL LINE FLOWS MW	TOTAL LINE FLOWS MVAR
-0.1	-1.9	0.1	1.1	712.08	315.31	712.04	204.61	0.16	112.61
		6	5						

NUMBER OF BUSSES ACTUALLY IN USE = 20

APPENDIX B

TABULATION OF LOADS
480V VOLT EMERGENCY POWER SYSTEM

SURRY - UNIT 2

480V UNIT SUBSTATION "2H1"

TABULATION OF LOADS

SECTION NO.	MOTOR CONTROL CENTER 2H1-1 DESCRIPTION OF LOAD	KVA LOAD LOCA W/LOOP	LOOP	LOCA
5-C	Feeder to MCC 2H1-1A (attached list)	24.7	24.7	24.7
1-D	Control Room Emer. Supply Fan 2-VS-F-41	(1)	-	(1)
1-E	Charging Pump Serv. Wtr Pp 2-SW-P-10A	8	8	8
1-F	480V Pwr Receptacle	-	-	-
2-D1	Radiation Monitoring (2-5KVA XFMRS)	5	5	5
2-D2	Vital Bus (1-10KVA XFMR)	5	5	5
3-D	Control and Relay Rm A/C Cond pp 2-VS-P-1C	14.5	14.5	14.5
4-A1	Chilled Wtr A/C 1-VS-AC-2	11.2	11.2	11.2
4-A2	Chilled Wtr A/C 1-VS-AC-6	11.2	11.2	11.2
4-B1	Chilled Wtr A/C 2-VS-AC-6	7.1	7.1	7.1
4-B2	Chilled Wtr A/C 2-VS-AC-8	7.8	7.8	7.8
4-E	A/C Chiller Pp 1-VS-P-2C	19.9	19.9	19.9
5-A	Control and Relay Rm Wtr Chiller 1-VS-E-4C	95.6	95.6	95.6
5-B1	Battery Charger 2A-1	38.8	19.4	38 8
5-B2	Battery Charger 2A-2	(2)	(2)	(2)
1-C	Charging Pp Cooling Wtr Pp 2-CC-P-2A	11.2	11.2	11.2
5-D	Emer. Generator Fuel Oil Pp 1-EE-P-1B	1.1	1.1	1.1
5-E	Cont. & Rel. Rm Group #1 Filter 1-VS-S1B	1.1	1.1	1.1
6-A	Safeguards Cond. Pp 2-HS-P-3B	-	-	-
6-E	Relay Rm Emer. Supply Fan 2-VS-F-42	(1)	-	(1)
7-D	Seal Oil Back-up Pp	25.5	25.5	25.5
1-B	Heat Tracing (1-15KVA XFMR)	7.5	7.5	7.5
8-D	Turning Gear Oil Pump	59.8	59.8	59.8
	TOTAL	355	335.6	355

(1) Manual start 60 min following LOCA

(2) Assumed single charger operating at full load.

430V UNIT SUBSTATION "2H1"

TABULATION OF LOADS

SECTION NO.	MOTOR CONTROL CENTER 2H1-1A DESCRIPTION OF LOAD	KVA LOAD LOCA W/LOOP	LOOP	LOCA
1-A	Incoming Line Section	-	-	-
1-B	Air Compressor No. 1	8.76	8.76	8.76
1-C	Air Compressor No. 2	8.76	8.76	8.76
1-D1	Battery Charger	3.45	3.45	3.45
1-E2	Diesel Generator Control Cab.	(1)	(1)	(1)
1-D2	480V Power Receptacle	-	-	-
1-E1	Lighting Cabinet (1-7.5 KVA XFMR)	3.75	3.75	3.75
	TOTALS	24.7	24.7	24.7

(1) Not required when diesel running

480V UNIT SUBSTATION "2H1"

TABULATION OF LOADS

SECTION NO.	MOTOR CONTROL CENTER 2H1-2 DESCRIPTION OF LOAD	KVA LOAD LOCA W/LOOP	LOOP	LOCA
SOUTH				
2-D	Boron Inj. Tank Heaters 2-SI-TK-2	3	3	3
5-D1	480V Power Receptacle	-	-	-
5-D2	Hydrogen Recombiner A	-	-	-
9-A	Gaseous Waste Blower 20GW-C-3A	-	-	-
10-A	Boric Acid Trans Pp 2-CH-P-2C	14.3	14.3	14.3
NORTH				
1-D	Charging Pp Aux. Oil Pp 2-CH-P-1A	-	-	-
2-A	Aux. Feedwater Pp Motor Heater	-	2	-
2-D	Containment Vac. Pp 2-CV-P-1A	-	1.4	-
3-A	Emer. Generator Fuel Oil Pp 2-EE-P-1E	(1)	(1)	(1)
4-A	Safeguard Area Sump Pp 2-DA-P-1A	1.3	1.3	1.3
4-D	Recirc. Spray Pp Motor Htr.	-	2	-
5-A	Cont. Spray Pp Motor Htr (2-CS-P-1A Motor)	-	2	-
5-D	Safeguards Area Exh. Fan 2-VS-F-40A	8.7	8.7	8.7
6-A	LHSI Pp Motor Htr (2-S1-P-1A Motor)	-	2	-
6-E	Recirc. Spray Pp Motor Htr	-	2	-
7-A	Boric Acid Tank A Htr 2-CH-E-6A	7.5	7.5	7.5
7-E	Boric Acid Tank C Htr 2-CH-E-6C	7.5	7.5	7.5

480V UNIT SUBSTATION "2H1"

TABULATION OF LOADS

SECTION NO. NORTH	MOTOR CONTROL CENTER 2H1-2 DESCRIPTION OF LOAD	KVA LOAD LOCA W/LOOP	LOOP	LOCA
8-D1	4KV Bus 2J Heater	-	7.5	-
8-D2	Incore Instrument Drive D	-	-	-
10-D	Emer. F.W. Make-up Pp 2-FW-P-4A	-	-	-
11-C	Control Rod Cooling Fan 2-VS-F-60A	73.3	73.3	73.3
11-D	Control Rod Cooling Fan 2-VS-F-60F	73.3	73.3	73.3
	TOTAL	188.9	207.8	188.9

(1) Assumed single pump operating, 1-EE-P-1B from MCC 2H1-1.

480V UNIT SUBSTATION "2J1"

TABULATION OF LOADS

SECTION NO.	MOTOR CONTROL CENTER 2J1-1 DESCRIPTION OF LOAD	KVA LOAD ~~LOCA~~ W/LOOP	LOOP	LOCA
1-C	Turning Gear Motor	51.8	51.8	51.8
2-A	Inst. Air Comp 2-IA-C-1	-	-	-
3-A1	Rad Monitoring	5	5	5
3-A2	Vital Bus II - IV FDR	5	5	5
4-A1	Inst. Air Dryer 2-IA-D-1	2	2	2
4-A2	RSS Trans Fdr.	25	25	25
4-D	Emer. Gen F.O. Pump 1-EE-P-1F	1.1	1.1	1.1
4-E	Charging Pp Cooling Wtr Pump 2-CC-P-2B	11.1	11.1	11.1
5-C1	Batt Chgr 2B-1	38.8	19.4	38.8
5-C2	Batt Chgr 2B-2	-	-	-
5-E	Safeguards Duplex Cond. Pmp 2-HS-P-3A	-	-	-
6-B	Gen Brg Lift Pump	6.1	6.1	6.1
6-D	Charging Pp Aux. Oil Pp 2-CH-P-1B	-	-	-
6-E	Charging Pp Service Wtr. Pum 2-SW-P-10B	8.0	8.0	8.0
7-D1	Semi-Vital Bus Feeder	20	20	20
	TOTALS	173.9	154.5	173.9

480V UNIT SUBSTATION "2J1"
TABULATION OF LOADS

SECTION NO.	MOTOR CONTROL CENTER 2J1-2 DESCRIPTION OF LOAD	KVA LOAD LOCA W/LOOP	LOOP	LOCA
EAST				
1-D	Cont Air Compresor 2-IA-C-2B	11.2	11.2	11.2
2-A	Blower 2-GW-C-3B	-	-	-
3-B	Cont Vac pp 2-CV-P-1B	-	1.4	-
3-C	Cont Spray Pp Mtr Htr 2-CS-P-1B	-	2	-
3-D	Safeguards Area Sump Pp 2-DA-P-1B	1.4	1.4	1.4
3-E	Stm Gen Aux Fd Pump Mot Htr 2-FW-P-3A	-	2	-
4-D	Recirc. Spray Pp Mtr. Htr 2-RS-P-1B	-	2	-
5-D	Safeguard Area Exh. Fan 2-VS-F-40B	8.7	8.7	8.7
6-D	Hydrogen Recombiner B	-	-	-
7-D	Lo Hd Saf Inj Mot Htr 2-SI-P-1B	-	2	-
8-D	Recirc Spray Pp Mot Htr 2-RS-P-2B	-	2	-
10-D	Boric Acid Tk Htr 2-CH-E-6B	7.5	7.5	7.5
9-E1	4 KV Swgr Bus H Htr. FDR	-	7.5	-
9-E2	Incore Instr. Drive "E"	-	5	-
2-D	Emer. Makeup Pp 2-FW-P-4B	-	-	-
3-A2	Fdr - 15KVA XFMER Heat Tracing Cab #10	7.5	7.5	7.5
WEST				
1-D2	Personnel Hatch	-	-	-
2-D	Charging Pp Aux oil Pump 2-CH-P-1C	-	-	-
3-D	Boron Inj Tank Htr 2-SI-TK-2	3	3	3
6-B	Cont. Rod Cool Fan 2-VS-F-60C	73.3	73.3	73.3
8-C	Control Rod Drive Cooling Fan 1-VS-F-60D	73.3	73.3	73.3
9-D	Safeguards Supply HV Unit 2-VS-HV-4	15.5	15.5	15.5
10-B	Boric Acid XFER Pump 2-CH-P-2D	14.3	14.3	14.3
	TOTAL	215.7	239.6	215.7