2. STRUCTURAL EVALUATION

2.1 Description of Structural Design

2.1.1 Discussion

The principal function of the packaging is to provide a secondary containment barrier and shielding under the normal transport and accident conditions imposed. The primary containment is provided by the source capsule, which meets special form requirements, and is usually doubly encapsulated. For containment, the source capsule design has been proven for conditions more stringent than those required of the packaging.

Figure 2.1.1 is a section drawing of the package showing the S/TC in place and the principal structural components.

Figure 2.1.2 is a vertical section of the S/TC with the structural components identified. Depending upon the type of machine for which the source is being supplied, the source holder either fills an entire Drum Assembly chamber or is positioned between the shield plugs, an example of which is depicted in Figure 2.1.2. Drum Assembly chambers not carrying a source are loaded with full length shield plugs. The Drum Assembly, as well as the source holder/shield plugs, are held in place by the End Cover Assemblies, which bolt to a flange that is an integral part of the S/TC Shell Assembly. Silicone rubber gaskets seal the cavity which houses the Drum Assembly. The bolts are tightened to firmly compress the gasket. The bolting load is light because the cavity pressure remains essentially atmospheric and the gasketing does not require a significant preload for sealing. The End Cover bolts are tightened to a torque of 100-125 inch pounds.

The base supports the S/TC Shell Assembly from beneath the flange. Four lifting lugs are welded to the upper side of the S/TC Shell Assembly, which are used in pairs along with the lifting bail in moving the S/TC when out of the overpack. The S/TC Shell Assembly and Cover Assemblies are fabricated of ASTM A-516 steel and the Drum Assembly is of austenitic stainless steel. Both materials have superior fracture toughness properties to a temperature of -40°F and below.

The base of the S/TC fits into the Wooden Protective Jacket (WPJ) of the overpack with a nominal radial clearance of about 3/8 of an inch. With the WPJ cover in place, the nominal vertical clearance is also 3/8 of an inch, with the bail installed. The S/TC is transported with the bail in place.

The Wooden Protective Jacket fits into the Steel Shell with nominal clearances of 1/4 inch radially and 1 inch vertically. The latter clearance, however, also serves as storage space for the WPJ cover lifting chain. The WPJ cover is secured by bolting to the extension of the sixteen 5/8 inch diameter tie rods running the full axial height of the

WPJ. The outer Steel Shell flanged closure is secured with a minimum of thirty two, 1/2 inch bolts with nuts.

While the overpack serves principally as fire protection, under accident and some normal transport conditions, the overpack is also expected to provide energy absorption. Permanent deformation of noncritical components and damage to the overpack is acceptable under accident conditions if the packaging function remains unimpaired. For example, a one-meter free drop under normal transport might permanently deform the Steel Shell skids or lid, but this would not impair the containment nor shielding function of the package.

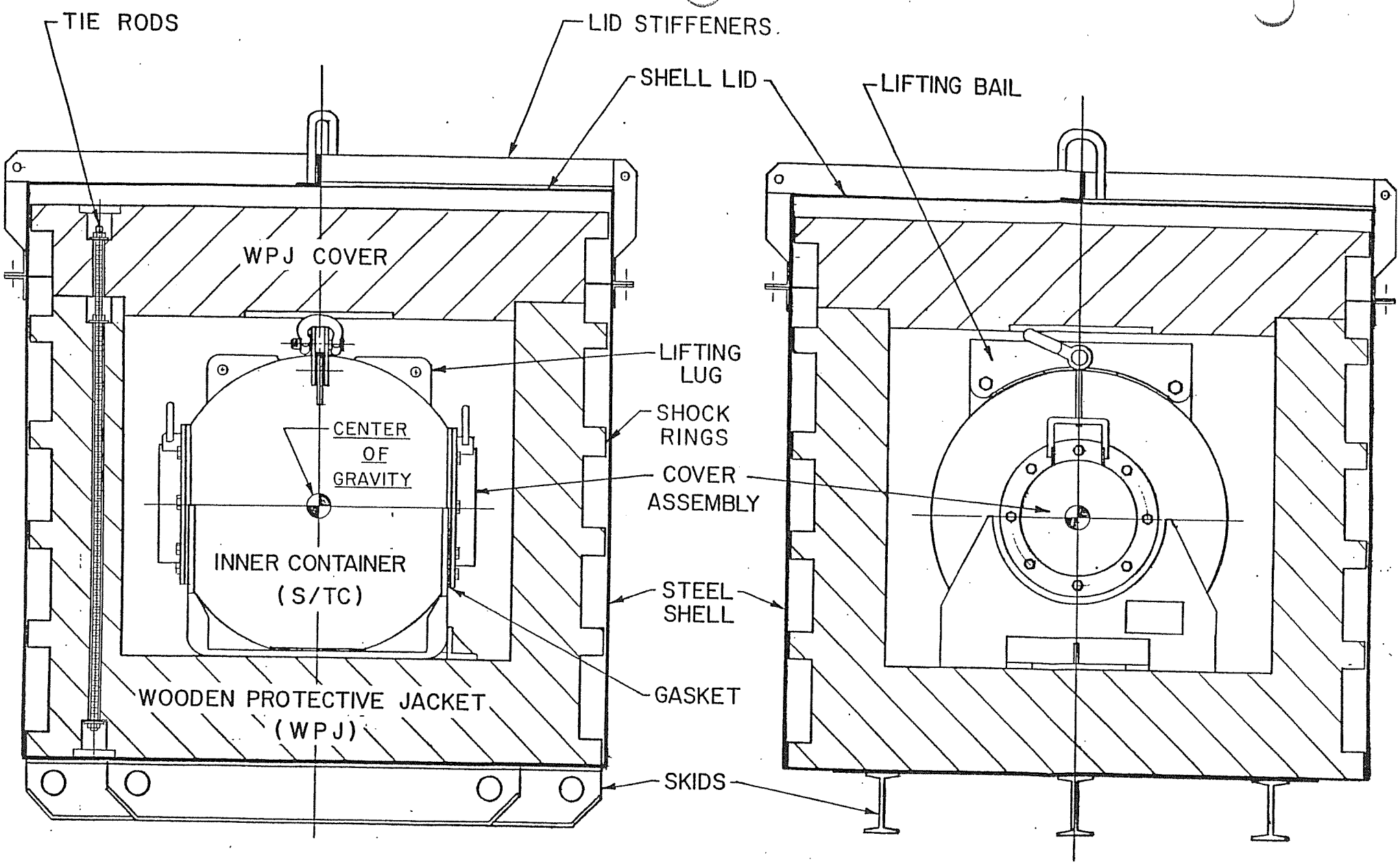

MODEL NPI-20WC-6MK II SHIPPING PACKAGE VERTICAL SECTION

FIGURE 2.1.1

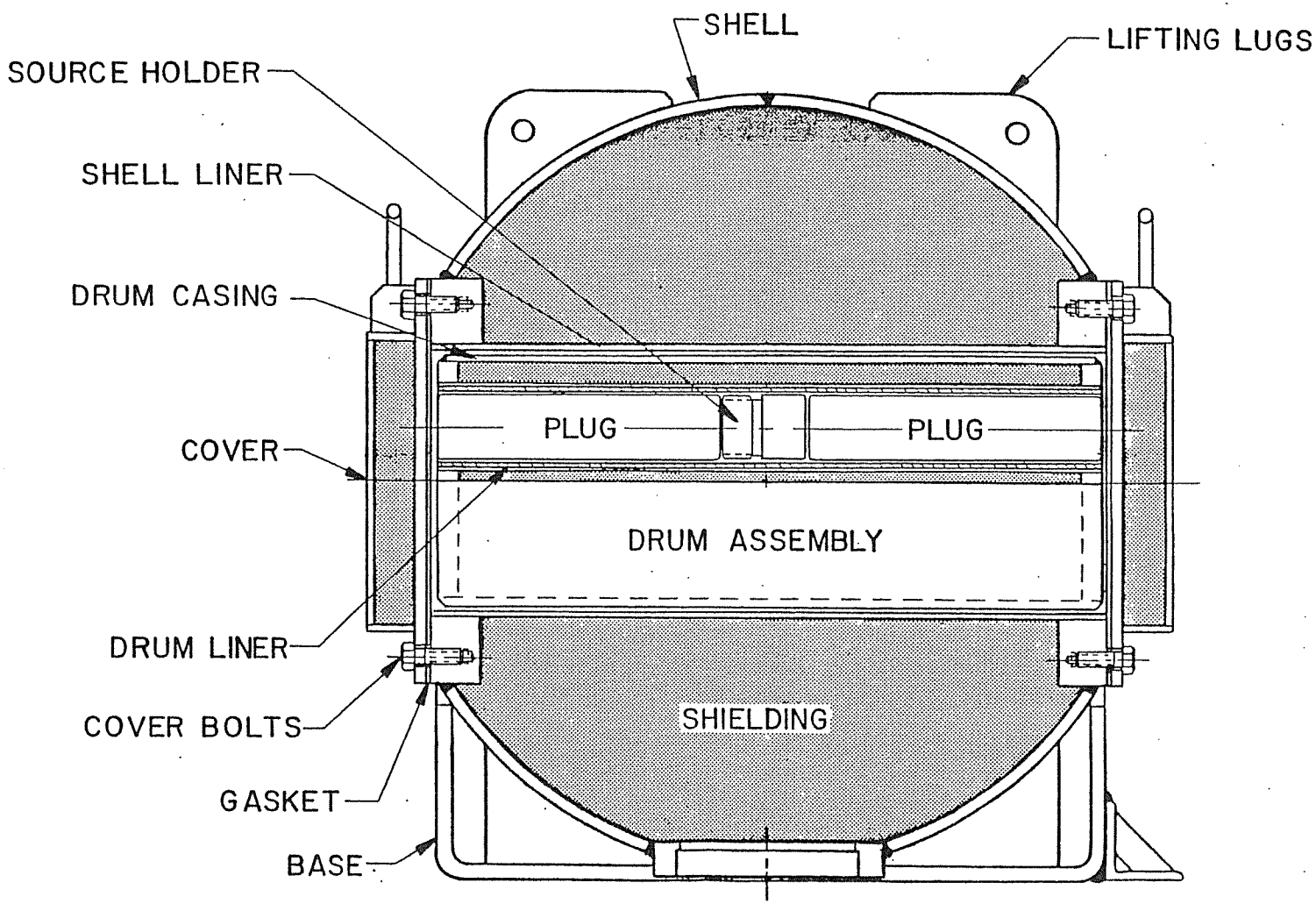

S/TC INNER CONTAINER STRUCTURAL COMPONENTS

FIGURE 2.1.2

2.1.2 Design Criteria

The guiding design criteria for ferrous material are those of the ASME Boiler and Pressure Vessel Code, Section 3, Division 1, and the NRC Regulatory Guide 7.6 (March 1978), which are in essential agreement. However, the package structural simplicity and the absence of any significant primary stresses in normal transport permit using simple criteria which fit into the envelope of the more encompassing formulation cited and are as follows:

	Stress Limits for Critical Components[1]	
	Normal Transport	Hypothetical Accident Conditions
Primary Stresses		
Sustained Loads independent of displacement, i.e., weight or a separately pressurized cavity		
Normal	S_m	S_y
Shear[2]	.55 S_m	.55 S_y
Impact loads		
Normal	S_y	S_u
Shear[2]	.55 S_y	.55 S_u
Secondary Stress		
Strain relieved stress; i.e., thermal or local bending		
Normal	S_y	S_u
Shear[2]	.55 S_y	.55 S_u

[1] S_m = Design Stress Intensity; S_y = Yield Strength; S_u = Tensile Strength
[2] S. Timoshenko, Strength of Materials, Volume I, Page 58

For evaluating impact energy absorption and associated deflections, the following rules were used:

- Critical Components – Calculated elastically up to the appropriate stress limit (S_y for normal transport and S_u for the hypothetical accident conditions).

- Noncritical Components – Calculated elastically to $S \leq S_y$ or to the elastic limit (wood). In compression only, energy absorption beyond yield or the elastic limit is taken as:

  $E = \delta \times (S_y + S_u)/2$ for Ferritic Materials; and,

  $E = \delta \times$ (Dynamic Crushing Pressure) for plywood composite (see Appendix 2.10.6)

  Where δ is the deflection or deformation

- Post buckling energy absorption is taken as compression or bending, as appropriate.

The factor of safety is defined as the allowable stress, divided by the actual stress, or the limiting load divided by the actual load.

Brittle fracture of metal is avoided by selecting materials of construction that exhibit ductile fracture under impact testing within the design temperature range (to -40°F).

2.1.3 Weights and Center of Gravity

The packaging component and total weights are provided in Table 2.1.1. The overall dimensions, along with the weight and location of the center of gravity of the packaging, is shown in Figure 2.1.3. The center of gravity coincides very closely with the geometric center of the spherical portion of the S/TC. For a particular shipment, the weight may differ slightly because that particular combination of drawers, plugs, and sleeves may not add up to the same weight. The differences are not significant in evaluating the package. Where total weight was central to an evaluation, the maximum value of 6,000 pounds was used for the total package.

Table 2.1.1

COMPONENT AND TOTAL PACKAGING WEIGHTS

MODEL NPI-20WC-6 MkII/SHIPPING PACKAGE

Component	Weight, Pounds, Nominal
Inner Cask, S/TC, Drawing 240122 item 5 configuration	
Shell Assembly	2,750
Drum Assembly	310 max
Covers (2)	125 max
Drawers, Plugs, & Sleeves	202 max
Lifting Bail	25
Subtotal	3,410
Wooden Protective Jacket	
Body	860
Lid	290
Subtotal	1,150
Steel Shell	
Body	475
Lid	175
Subtotal	650
Total Package Weight, Nominal	5,210
Total Package Weight, Maximum	6,000

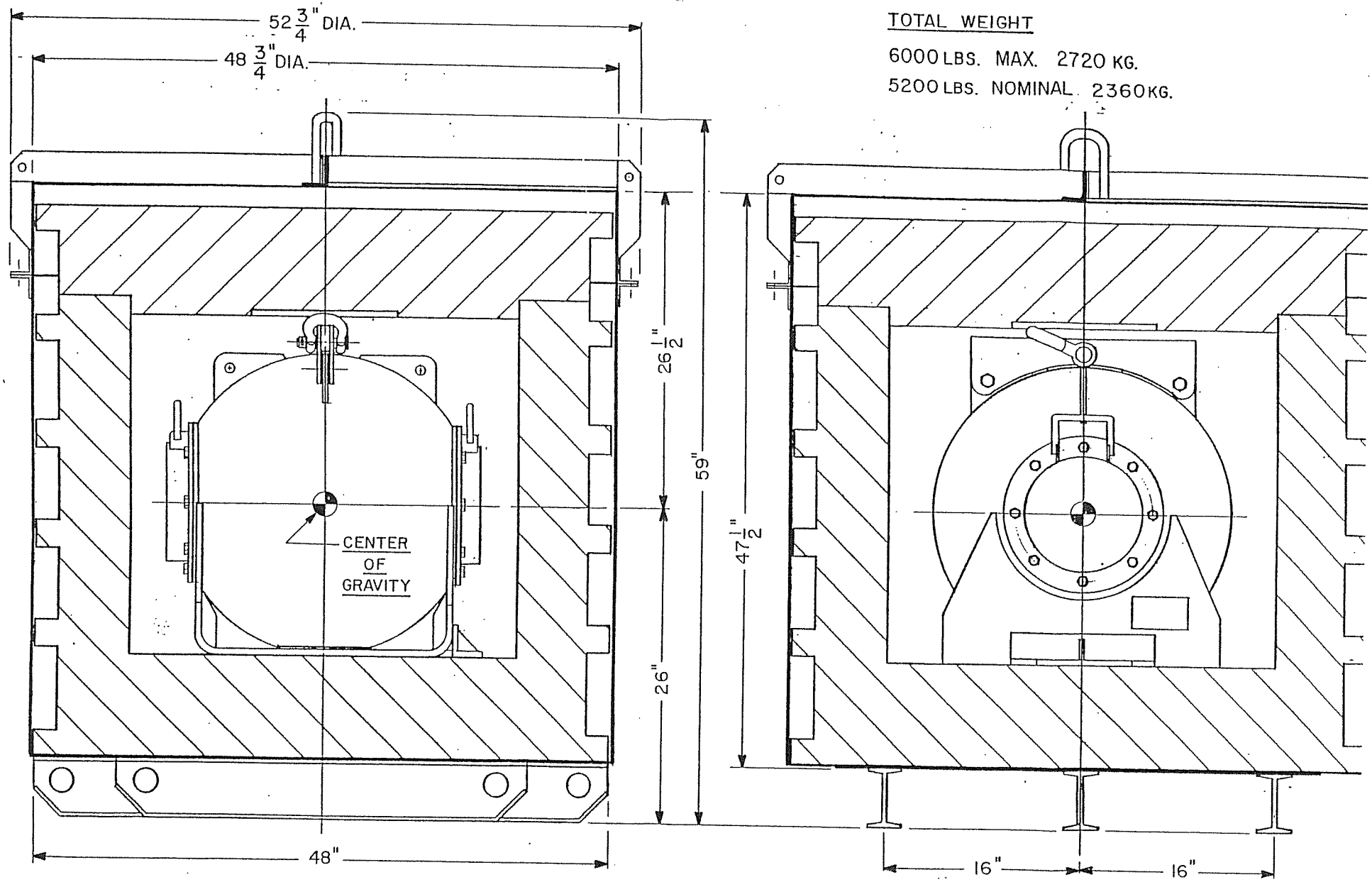

MODEL NPI-20WC-6 MK II SHIPPING PACKAGE
OVERALL DIMENSIONS, WEIGHT AND CENTER OF GRAVITY

FIGURE 2.1.3

2.2 Materials

2.2.1 Mechanical Properties of Materials

Mechanical properties of the ferritic steels used in the package are listed in Table 2.2.1 over the temperature range of interest. Properties of the austenitic steels are listed in Table 2.2.2 and those of the low alloy steel bolts in Table 2.2.3. Coefficients of thermal expansion for steels were lumped as either ferritic or austenitic materials and are listed in Table 2.2.4. All of the above properties, as well as the thermal conductivity of steels used in Chapter 3, were obtained from the American Society of Mechanical Engineers Boilers and Pressure Vessel Code, 1983 Edition, with addenda, Section III, Division 1, Appendix I.

The physical properties of lead are listed in Table 2.2.4 and most were obtained from the Cask Designers Guide, ORNL-NSIC-68.

Pertinent mechanical properties for the Wooden Protective Jacket material, a coast type Douglas fir marine plywood, were developed from the USDA Forest Product Laboratory's Wood handbook and are listed in Table 2.2.6.

In addition to the above, Poisson's ratio for steel was taken as 0.3 and the density of package materials listed in Table 5.3.1 was that used in calculation.

Table 2.2.1

MECHANICAL PROPERTIES – FERRITIC STEELS

ASTM A-516 Gr70 Plate (2)

Temperature, °F	100	200	300	400	500	600	Ref. (1)
S_u, ksi	70	70	70	70	70	70	(3)
S_y, ksi	38	34.6	33.7	32.6	30.7	28.1	(4)
S_m, ksi	23.3	23.1	22.5	21.7	20.5	18.7	(5)
E x 10^{-6} (2) psi	(12)	28.8	28.3	27.7	27.3	26.7	(6)
ASTM A-333 Gr 6 Pipe (2)							
S_u, ksi	60	60	60	60	60	60	(7)
S_y, ksi	35	31.9	31	30	28.3	25.9	(8)
S_m, ksi	20	20	20	20	18.9	17.3	(9)
E x 10^{-6} psi			same as A-516				
ASTM 1-36 Structural Steel (2)							
S_u, ksi	58	58	58	58	58	58	(10)
S_y, ksi	36	32.8	31.9	30.8	29.1	26.6	(11)
S_m, ksi	19.3	19.3	19.3	19.3	19.3	17.7	(10)
E x 10^{-6} psi			same as A-516				

(1) ASME B & PV Code, 1983 Edition, Section III, Division 1, Appendix I, all references
(2) S_u = Tensile Strength; S_y = Yield Strength; S_m = Design Stress Intensity; E = Elastic Modulus
(3) Table I – 3.1, Page 69
(4) Table I – 2.1, Pages 44, 45
(5) Table I – 1.1 Pages 8, 9
(6) Table I – 6.0, Page 99
(7) Table I – 3.1, Page 67
(8) Table I – 2.1, Pages 42, 43
(9) Table I – 1.1, Pages 6, 7
(10) Table I – 11.1, Page 196
(11) Table I- 13.1, Page 200
(12) 30.2 at -100°F, 29.5 at 70°F

Table 2.2.2

MECHANICAL PROPERTIES – AUSTENITIC STEEL

Type 304 Stainless Steel (2)

ASTM A-213 Seamless Tube

ASTM A-240 Plate

ASTM A-312 Welded and Seamless Pipe

Temperature, °F	100	200	300	400	500	600	Ref. (1)
S_u, ksi	75.0	71.0	66.0	64.4	63.5	63.5	(3)
S_y, ksi	30.0	25.0	22.5	20.7	19.4	18.2	(4)
S_m, ksi	20.0	20.0	20.0	18.7	17.5	16.4	(5)
E X 10^{-6} psi	(6)	27.6	27.0	26.5	25.8	25.3	(7)

(1) ASME B & PV Code, 1983 Edition, Section III, Division 1, Appendix I all references
(2) S_u = Tensile Strength; S_y = Yield Strength; S_m = Design Stress Intensity; E = Elastic Modulus
(3) Table I – 3.2, Page 76
(4) Table I – 2.2, Pages 56, 57
(5) Table I – 1.2, Pages 23.1, 23.2
(6) 29.1 at 100°F, 28.3 at 70°F
(7) Table I – 6.0, Page 99

Table 2.2.3

Bolting Material

SAE Grade 8 Steel Bolts (1)

Temperature, °F	100	200	300	400	500	600	Reference
S_u, ksi	150	150	150	150	150	150	(2,3,4,5)
S_y, ksi	130	124	120	116	112	107	(2,3,4,5)
S_m, ksi	43.3	41.4	40.0	38.8	37.6	35.8	(3,4)

(1) S_u = Tensile Strength; S_y = Yield Strength; S_m = Design Stress Intensity
(2) Metals Handbook, ASM Committee on Carbon and Alloy Steels, 9th Edition (See 2.10.11 Part B)
(3) ASME B & PV Code, 1983 Edition, Section III, Division1, Appendix I, Table I-1.3 and Table I-3.1
(4) Tensile Strength, Yield Strength, and Design Stress Intensity at 200°F and above taken proportional to ASTM A540 B32 values which material is encompassed in Grade 8 standard. (See 2.10.11)
(5) SAE Standard SAE J429 AUG83. (See 2.10.11 Part A)

Table 2.2.4

COEFFICIENTS OF THERMAL EXPANSION, in./in. °F x 10^6

Temperature, °F	100	200	300	400	500	600	Ref. (1)
Ferritic Steels							
Instantaneous	5.65	6.39	7.04	7.60	8.07	8.46	(2)
Mean from 70°F	5.53	5.89	6.26	6.61	6.91	7.17	(2)
Austenitic Steels							
Instantaneous	8.63	9.08	9.46	9.80	10.10	10.38	(2)
Mean from 70°F	8.55	8.79	9.00	9.19	9.37	9.53	(3)

(1) ASME B & PV Code, 1983 Edition, Section III, Division 1, Appendix I
(2) Table I – 5.0, Page 94
(3) Table I – 5.0, Page 95

Table 2.2.5

PHYSICAL PROPERTIES OF LEAD (CHEMICAL GRADE)

		Source
Tensile Strength	2,300 to 2,800 psi	(1)
Yield Strength	1,180 to 1,380 psi	(1)
Modulus of Elasticity	2×10^6 psi	(1)
Poisson's Ration	0.40 to 0.45	(1)
Melting Point	618°F (3)	(1)
Thermal Expansion	16.1×10^{-6} in./in. °F	(1)
Thermal Conductivity	20 to 18 B/hr. ft. °F from R.T. to 600°F	(2)

(1) Cask Designers Guide, ORNL-NSIC-68, Pages 56, 84
(2) W.H. McAdams, Heat Transmission, 2nd Edition, Page 380
(3) M.P. of lead is frequently given as 621°F and reference is sometimes made to this value

Table 2.2.6

MECHANICAL PROPERTIES OF COAST TYPE DOUGLAS FIR PLYWOOD BASE(1)

Proportional Limit, parallel to grain	6,000 psi
Proportional Limit, perpendicular to grain	900 psi
Elastic Modulus:	
Parallel to grain	2×10^6 psi
Perpendicular to grain, tangential	10^5 psi

(1) Wood Handbook (Agriculture Handbook No. 72)
U.S. Department of Agriculture, Forest Products Laboratory

2.2.2 Chemical and Galvanic Reactions

The materials specified for the construction of this package system and its contents form no significant chemical or galvanic couples under any normal wet or dry condition. Normal loading and unloading are dry operations. The S/TC is sealed with a gasket of silicone rubber. The only portion of the package subject to moisture, which would be precipitation or atmospheric condensation, is the Steel Shell, and possibly the outside surface of the Wooden Protective Jacket.

In 2015, during an unrelated repair of one of our Steel Shells, an area of corrosion was identified between two metal surfaces as a result of water intrusion. The Steel Shell was repaired and seal welds were used on this and other areas of the Steel Shell to preclude a recurrence of this or similar problems.

2.2.3 Effects of Radiation on Materials

The package shielding is performed primarily by the S/TC, the principal materials of construction of which are metal and are not degraded by exposure to radiation. The End Cover gaskets are inspected prior to each use and are replaced during periodic maintenance. It has been our experience that the gasket material, WPJ, and paint do not receive enough exposure to result in any degradation or damage.

2.3 Fabrication and Examination

2.3.1. Fabrication

By the terms of the current Certificate of Compliance, fabrication of new packaging is not authorized.

2.3.2 Examination

As fabrication is not authorized, the examination section applies to repairs of packaging, and is addressed in Section 8, Maintenance.

2.4 General Standards for All Packages

2.4.1 Minimum Package Size

The smallest overall dimension of the package is approximately 120 cm (48 in.), far in excess of the 10 cm lower limit required by 10 CFR 71.43(a).

2.4.2 Tamper-Indicating Feature

The package features three sets of closures: the End Covers on the S/TC, the lid of the WPJ, and the lid of the Steel Shell, which is the package's outermost closure. It includes a tamper-indicating seal, as seen in Drawing 240116 (see Appendix 1.3), at drawing coordinates F5 and note 3.

2.4.3 Positive Closure

All of the package closures are bolted. The S/TC has two End Covers, each of which is fastened to the cask body by eight 1/2 inch diameter bolts. The S/TC fits into the Wooden Protective Jacket so that the End Cover bolts are inaccessible during transport. The Wooden Protective Jacket lid is secured by sixteen 5/8 inch nuts. The Wooden Protective Jacket, in turn, fits into the Steel Shell, which has a flange closure using thirty-six 1/2 inch bolts. This closure includes a tamper-indicating seal. The package cannot be opened inadvertently, and deliberate opening requires extensive effort, utilizing a variety of equipment, some of which is not normally available during transit.

2.5 Lifting and Tie-Down Standards

2.5.1 Lifting Devices

The S/TC has four lifting lugs which are a structural part of the Shell Assembly. Only two of these are used at any one time, along with a metal lifting bail to handle the S/TC. The minimum factor of safety to yield, when the S/TC is being lifted in the intended manner, is over ten, which exceeds the regulation required factor of three. Since the lifting lugs are part of the S/TC, they are not accessible during normal transport.

No specific lifting devices are provided for handling the package during general transport. The normal method of moving the package is by lifting from the bottom, as with a forklift truck. The bottom of the Steel Shell is reinforced with an additional eight gauge plate (0.169 inches thick) to accommodate such handling.

The Steel Shell is provided with four tie down brackets which are discussed in Section 2.5.2 following. While not intended as lifting devices, if used as such they would provide a safety factor of greater than 9 against yielding if the load were distributed between at least two of the four brackets. This meets the minimum safety factor of three, required in 10 CFR 71.45 (a) for any lifting attachment that is a structural part of the package.

A lifting eye for handling the Steel Shell lid during loading and unloading is provided, but it is rendered inoperative during general transport with the addition of a lifting eye cover.

2.5.2 Tie Down Devices

Four brackets are provided for tie down of the package, should it be convenient to use them. Their use is not mandatory for safe transport of the package.

The brackets are fabricated from 3 x 3 x ⅜ inch structural steel angle, placed back-to-back, and welded to a 6-inch-wide, 3/16 inch thick reinforcing support band, which encircles the body of the Steel Shell just below the lower closure flange. They are spaced at 90° intervals around the periphery of the Steel Shell and oriented 45° from the direction of the support rails. The tie down brackets are shown in Drawing 240116 (see Appendix 1.3). The brackets and package meet the specific tie down requirements of 10 CFR 71.45(b). The supporting calculations are provided in Appendix 2.10.1.

While not designed to be used regularly in this manner, the brackets can be used as lifting devices. The total load would be uniformly shared between the four brackets. When used as lifting devices, the brackets and attachments meet the structural requirements of 10 CFR 71.45(a); specifically, a minimum safety factor of three against yielding. The supporting calculations are provided in Appendix 2.10.10.

If the brackets are not used, lines placed across the top or around the Steel Shell fastened to the transport vehicle will adequately secure the package under the required loads. The support rails can also be clamped and shored for hold down. The package can be secured by any method acceptable for the intended mode of transport.

2.6 Normal Conditions of Transport

2.6.1 Heat

The thermal evaluation is based on heating tests conducted with a representative shipping package, along with calculations used to obtain design evaluation conditions. The description of the tests, calculations, and results of the thermal evaluations are presented in Section 3.4. Summary results are provided here, as needed for the structural evaluation.

2.6.1.1 Summary of Pressures and Temperatures. The maximum normal operating pressure in the sealed cavity of the S/TC is expected to be essentially atmospheric for all conditions. For the purpose of establishing a pressure loading for the structural analysis, it was postulated that the cavity could be sealed immediately after loading the source, thus enclosing room temperature air, which would subsequently heat up to surrounding maximum metal temperature or, alternatively, to maximum source surface temperature. Under these circumstances, the maximum internal pressures were estimated to be 7 and 13 psig, respectively (see Section 3.4.4). A value of 15 psig has been used for structural evaluation.

Maximum package temperatures, under normal transport conditions, are given in Table 2.6.1.1, which is identical to Table 3.1.1. The principal thermal loadings have been developed from these temperatures.

2.6.1.2 Differential Thermal Expansion. A differential thermal expansion occurs in both the Drum and Shell assembly under normal transport conditions. It is caused by differential heating of the components and is a steady state load. In the case of the Drum, the liners of the source chambers remain at a higher average temperature than the Drum casing, as long as a source is loaded. This results in a compression loading of the liner and a tension loading in the casing. A similar, but less severe, situation is obtained in the Shell Assembly.

A thermal stress evaluation of the Drum and Shell Assemblies is detailed in Appendix 2.10.2. It is based on the maximum space average temperature differences anticipated under fully loaded decay heating conditions. The temperature calculations are detailed in Appendix 3.6.5.

In summary, for the Drum the maximum normal stress is calculated to be an axial compression of 5,620 psi in the liner, as compared with an allowable stress of 22,500 psi, providing a factor of safety of four. The maximum shear stress occurs in the end plate to liner weld joint and is calculated to be 5,430 psi, as compared with an allowable stress of 12,400 psi, providing a safety factor of 2.3.

In the Shell Assembly, both the liner compressive stress and the face plate to liner weld joint shear stress are below 3,000 psi. The allowable stresses are 31,200 psi in compression and 17,200 psi in shear and the safety factors are greater than ten and six, respectively.

Table 2.6.1.1

MAXIMUM PACKAGE TEMPERATURES
UNDER NORMAL TRANSPORT CONDITIONS (1)

Outside Steel Shell Surface	135°F	(57°C)
Outside Wooden Protective Jacket Surface	130°F	(54°C)
Inside Wooden Protective Jacket Surface	250°F	(121°C)
S/TC Surface	265°F	(129°C)
S/TC Shell liner and Drum O.D. (Local Max.)	330°F	(165°C)
S/TC Drum Liner (Local Max.)	425°F	(218°C)
Source Capsule Surface	550°F	(288°C)

(1) 240 watts corresponding to 15,000 curies of cobalt-60, and the insolation heat load prescribed in 71.7(c)(1) normalized to a reference ambient temperature of 100°F (38°C).

It is not anticipated that any transient conditions would significantly exceed the steady state loads considered above for normal transport conditions. However, margin is available for increased thermal loads without exceeding the design criteria. In any case, no loading is perceived that would compromise the package integrity.

2.6.1.3 Stress Calculations. In the following, stresses due to the combined effects of thermal gradients, pressure, and mechanical loads are considered. The need for fatigue analysis is reviewed.

Under normal transport conditions, the principal loadings are determined by the thermal conditions, as discussed above.

The pressure loadings are essentially zero. In practice, the source heats the cask internals to some extent before closure is made, or, as in a source transfer, the cask is already heated. As a consequence, the cause of any pressure increase, trapping of room temperature air in the source chamber upon closure, is mitigated. However, even at the evaluation basis, 15 psig internal pressure, the stress levels associated with the combined pressure and thermal loadings are less than one and one-half percent greater than the thermal stresses alone. The calculation is addressed in Appendix 2.10.2 for the Drum Assembly.

The mechanical loads are associated with the lifting lugs, cover bolt up, and structural support. None of the stresses resulting from these loads combine with those impacting the shielding or containment boundary. Steady load stresses associated with the lifting lugs are all less than ten percent of the minimum yield strength of the material. At a torque of 100-inch-pounds, the bolt up preload results in a bolt stress of 8,500 psi. This compares to an allowable working stress of 31,400 psi (working stress factor of safety, 3.7) and a minimum yield strength of 94,200 psi at the maximum operating temperature for the bolts. The steady state structural support stresses are negligible.

All of the stresses produced by the loadings described can be considered as steady state for evaluation purposes. The thermal loadings could be considered cyclical; however, the frequency is very low, perhaps 1,000 to 2,000 cycles in 20 years of service. Along with the consideration that the resulting maximum stress is less than one half the yield strength, a steady state assessment should prove adequate.

2.6.1.4 Comparison with Allowable Stresses. A comparison of normal transport load stresses with allowable stresses is provided in Table 2.6.1.4 for the most severe loading conditions on the inner cask assemblies and assembly components. The location of the stresses are shown in Figure 2.6.1.4. The tension and compression stress locations are representative. Items 1 through 6 are combined thermal and pressure stresses. The pressure stresses provide so low a contribution to the total (as discussed above) that the secondary allowable stresses are used for comparison.

There are no combined loadings on the overpack components that require a structural analysis. Loads associated with tie down are discussed in Section 2.5.2.

Table 2.6.1.4

NORMAL TRANSIENT LOAD STRESSES
COMPARISON WITH ALLOWABLE STRESSES

Member and Location (1)	Stress, psi	Allowable Stress, psi (Type) (2)	Factor of Safety
Drum Assembly			
1. Liner	5,700 (compression)	22,500 (S)	3.9
2. Casing	2,760 (tension)	22,500 (S)	8.2
3. End Plate to liner Weld Joint	5,510 (shear)	12,400 (S)	2.3
4. End Plate to Casing Weld Joint	2,860 (shear)	12,400 (S)	4.3
Shell Assembly			
5. Liner	2,860 (compression)	31,200 (S)	10.9
6. Face Plate to Liner Weld Joint	2,800 (shear)	17,200 (S)	6.1
7. Bolts	8,500 (tension)	31,400 (P)	3.7
8. Lifting Lugs	1,705 (shear)	12,500 (P)	7.1
9. Support	7,300 (compression)	22,700 (P)	3.1

(1) See Figure 2.6.1.4
(2) P = Primary; S = Secondary; all allowable stresses at maximum operating temperature

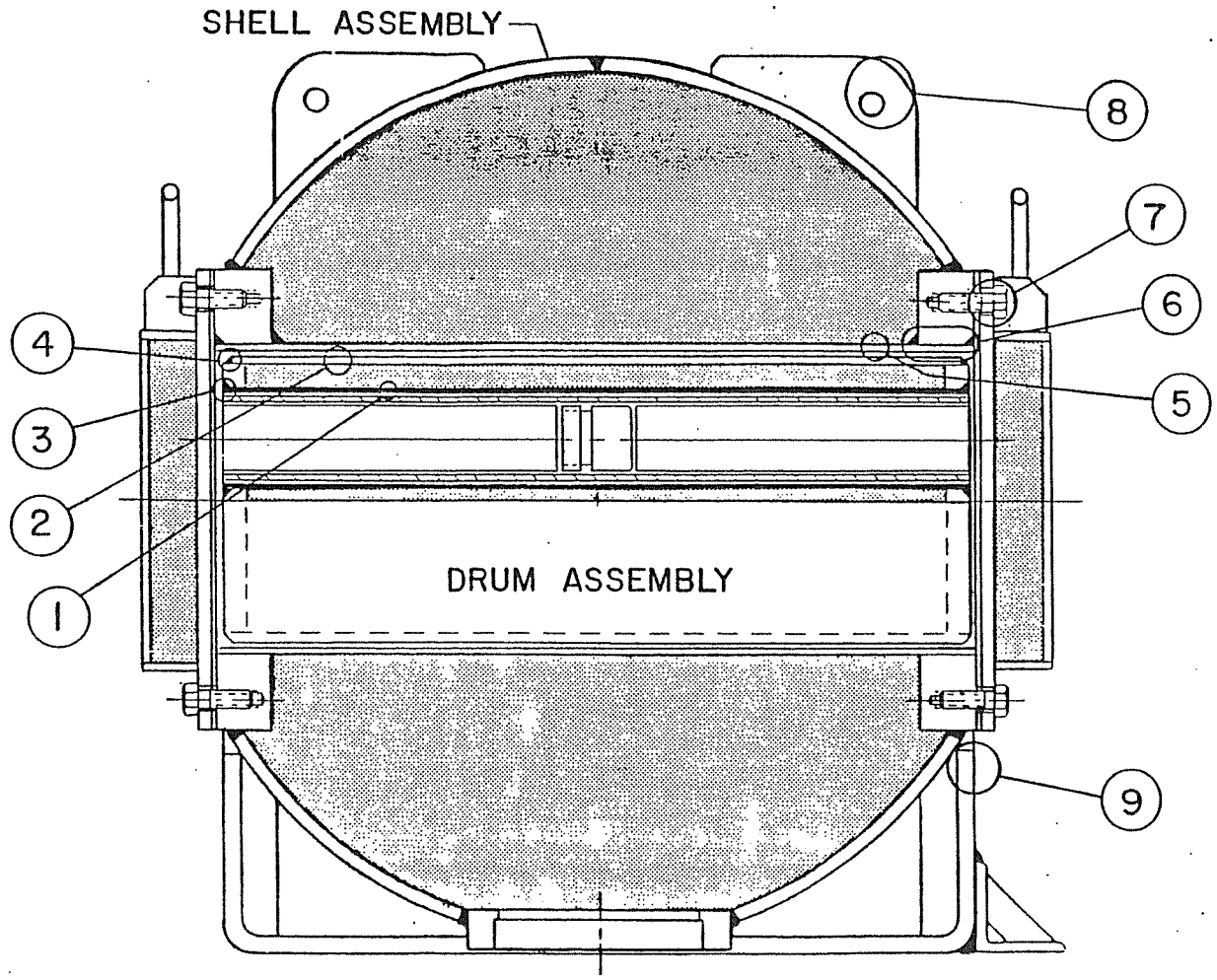

LOCATION OF STRESSES LISTED IN TABLE 2.6.1.4

FIGURE 2.6.1.4

2.6.2 Cold

Paragraph 71.71 of 10 CFR 71 requires an evaluation of the package design at an ambient temperature of -40°C (-40°F) in still air and shade.

All of the materials from which the package is fabricated are suitable for service at -40°F. The ferritic steel from which the S/TC Shell Assembly is fabricated is ASTM A-516 Grade 70 or ASTM A-333 Grade 6 which has superior fracture toughness properties and is not susceptible to brittle fracture at these temperatures. The Drum Assembly steel is austenitic stainless which remains ductile at low temperatures. The Steel Shell of the overpack is thin material and, in addition, does not constitute a containment boundary.

The sources are loaded and transported dry. No coolant is used. The exterior surface of the Drum Assembly and the plugs are occasionally cleaned with a penetrating oil. The residual film is left on the surface. This practice has not presented any operational or maintenance problems.

If the fully loaded package were at low ambient temperature, a most unlikely circumstance, the stress conditions would not be substantially different than those reported in the previous section.

2.6.3 Pressure

Paragraph 71.71 of 10 CFR 71 requires an evaluation of the package design at a reduced external pressure of 25 kilopascal (3.5 psi) absolute and an increased external pressure of 140 kilopascal (20 psi) absolute.

An external pressure of 3.5 psia to 20 psia would have little effect on the package. The overpack is not pressure tight and would adjust to the change in external pressure. The inner cask, which is pressure tight, would not see any substantial difference in structural loading or gasket sealing.

2.6.4 Increased External Pressure

As discussed above, neither component of the overpack (the WPJ and the Steel Shell) are gasketed, and would adjust to the change in external pressure. Both the S/TC which is the secondary barrier, and the contained special form source capsule substantially exceed the 10 CFR 71.71 requirement to withstand and external pressure of 20 psi absolute. Both are internally supported and can withstand high hydrostatic pressures. The spherical shell of the S/TC is suitable for a sustained working pressure of over 500 psi, even without support.

2.6.5 Vibration

This package system has been used to make over 3,300 shipments, most of them by road vehicles, without any indication of problems, such as fretting, arising from forced vibration incident to transport. The weight, configuration, and materials of the package all contribute to the natural damping of the system. No problems due to vibration have been experienced.

2.6.6 Water Spray

The water spray tests, as outlined in 10 CFR 71.71(c)(6), will have no adverse influence on the package. Neither the outer Steel Shell nor the Wooden Protective Jacket it surrounds would be adversely affected by a spray that simulates exposure to a rainfall of two inches per hour for a one-hour period. The S/TC would not be influenced.

2.6.7 Free Drop

The free drop for this package was analyzed initially under the 30-foot hypothetical accident conditions. The results for the HAC drop are presented in Section2.7. The loadings for each of the drop orientations (end, side and edge) are developed in Appendix 2.10.5. The results are summarized in Table 2.7.1.1.

In evaluating the normal transport four-foot drop, the same methodology was used. Calculations for the end drop, both top and bottom, side drop, and oblique drop for normal transport are detailed in Appendix 2.10.3. The g loadings and minimum factors of safety are summarized in Table 2.6.6.1. The normal transport factors of safety are based on the yield strength as a limit as compared with HAC factors, which are based on the tensile strength.

The results indicate that the package will withstand a four-foot drop without compromising containment or shielding integrity. The minimum containment factor of safety is 25 and for shielding is 4.8.

2.6.8 Corner Drop

Not applicable

2.6.9 Compression

The governing load for the compression requirement is equal to five times the maximum weight of the package. Using maximum allowable package weight of 6,000 pounds as a reference, the compression load applied uniformly to the top and bottom

of the package while in the normal transport position amounts to 30,000 pounds, or 15 tons. The minimum cross section of the Wooden Protective Jacket will support over 150 tons before crushing of the plywood commences. The I beam skids will support over 400 tons before yielding. The required compression load can be sustained for over 24 hours without difficulty.

2.6.10 Penetration

Impact of the hemispherical end of a vertical steel cylinder 1¼ inches in diameter and weighing 13 pounds, dropped from a height of one meter on the outer 12 gauge Steel Shell of the package, is discussed in Appendix 2.10.4. The results indicate that the cylinder will not penetrate the Steel Shell nor otherwise impair the integrity of the package.

TABLE 2.6.6.1 FREE DROP G LOADINGS AND MINIMUM FACTORS OF SAFETY - NORMAL TRANSPORT

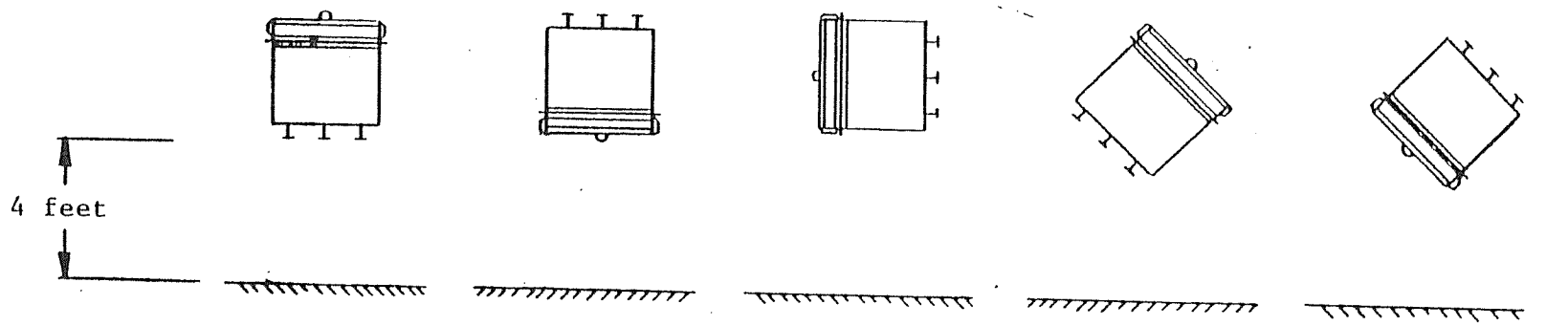

DROP ORIENTATION	End Drop		Side Drop	Oblique Drop	
	Bottom	Top		Bottom Edge	Top Edge
g Loadings	140	100	87	43	43
Containment Factor of Safety (1)	25	35	40	80	80
Shielding Factor of Safety (2)	4.8	6.8	7.8	16	16

(1) g loading to shear yield strength in source encapsulation steel ÷ imposed g loading

(2) g loading to shear yield strength in cover bolts ÷ imposed g loading

2.7 Hypothetical Accident Conditions

Evaluation of the behavior of the NPI package under hypothetical accident conditions is based upon the extensive series of tests performed by the Sandia Corporation and reported by Sisler[1]. The tests were performed in the mid-1960's and were directed towards developing an overpack which would meet the 30-foot drop requirement and the subsequent fire test when used in conjunction with a typical shielded inner container. The design developed and tested was the hollow cylindrical wooden shell, which became the DOT requirements and compares with the configuration which was tested at Sandia.

While tests at Sandia included packages of various sizes, the package that compared directly with the present NPI unit comprised a 3,275-pound lead shielded inner container surrounded by the Wooden Protective Jacket to make a total weight of approximately 4,000 pounds. The NPI unit inner container weight is 3,410 pounds (S/TC) and the total package weight is approximately 5,200 pounds, but this includes a 650-pound Steel Shell surrounding the Wooden Protective Jacket not included in the Sandia tests.

The results of ten, 30 foot drop tests were reported for the 4,000 pound containers[1] A total of eight units were dropped. One unit was dropped three times; one drop each on one end, on the side, and at 45 degrees on the opposite end. All containers survived in suitable condition to withstand a one hour, 1,800°F petroleum fire without repair[2]. One container was drop tested following the one-hour petroleum fire. It also survived the drop without damage to the inner container.

A comparison of the present NPI package with the units tested at Sandia is made in Table 2.7.1. The NPI unit has a Steel Shell surrounding the Wooden Protective Jacket that serves to mitigate the severity of both the drop and fire tests. The Sandia tests were done without such a shell.

The total weight of the 4,000-pound units tested by Sandia was approximately 13% less than that of the present NPI package without the Steel Shell. The inner container was 4% lighter. Overall, the units tested at Sandia compare closely with the NPI Package, which was built to the specifications developed from the test results.

[1] J.A. Sisler, "New Developments in Accident Resistant Shipping Containers for Radioactive Materials", Proceedings of the International Symposium for Packaging and Transportation of Radioactive Materials, January 12-15, 1965, SC-RR-65-98, Pages 141-185. This paper is reproduced in Appendix 2.10.9

[2] Ibid, Page 149

Table 2.7.1

COMPARISON OF NPI 20WC-6 MkII WITH SANDIA TEST PACKAGE

		Sandia	NPI
Inner Container:	Weight, pounds	3,275	3,410
	Diameter, inches	18 (cyl.)	25 (sph.)
	Height, inches	38	28
Wooden Protective Jacket:	Weight, pounds	725	1,150
	Diameter, inches	30 + rings	44+ rings
	Height, inches	58[2]	45
	Number of rings	5[2]	6
	Wall thickness, inches	6	6
	End cap thickness, inches	8	8¼ min.
	Bonding	[3]	Resorcinal resin with nails
Steel Shell:	Weight, pounds	none	650
	Diameter, inches		55
	Height, inches		56
	Shell thickness, inches		0.11
Total package weight,	Pounds	4,000	5,210

(1) By subtraction

(2) One container was 54½ inches high with no end rings (three rings only)

(3) Resorcinol-formaldehyde, both with and without nails; white glue, with nails

2.7.1 Free Drop

Package adequacy under the 30-foot free drop condition can be evaluated by considering the function and response and limiting loading of each of the three principal components of the package: the source capsule, the S/TC, and the overpack.

The approach employed has been to calculate the range of the most severe loadings for the various drop orientations and compare them with the limit loadings that, if imposed on critical components, might result in an increase in ex-package radiation levels, either directly from reduced shielding or from potential escape of radioactive materials.

The source capsule provides the primary containment. In meeting the special form requirement, it has already met more stringent containment requirements than those of the total package, including a 30-foot free drop without the benefit of any additional shock absorption. Nevertheless, there is some inertial load that could breach the encapsulation. The most restrictive failure mode from the standpoint of energy absorption is of the capsule "window". This is the limiting loading for containment and as calculated to exceed 10,000 g. Detail is provided in Appendix 2.10.7. A.

The shielding function is provided by the S/TC. While it also serves as secondary containment and functions as a transfer cask, under accident conditions its principal function is to ensure that the source shielding geometry does not change significantly. The assembled S/TC is essentially solid metal. The cumulative internal clearances are typically less than one quarter of an inch in any direction. The structure is a ductile high strength steel casing filled with lead. It is not likely that the shielding configuration will change very much as a consequence of a strike on the Shell Assembly, no matter how severe. On the other hand, should the End Cover bolts shear as a consequence of the strike, the End Covers could fall away and the drum, shield plugs, and the source capsules could shift, causing a significant change in the shielding configuration. The limiting load on the S/TC is that required to shear the End Cover bolts. Calculations, detailed in Appendix 2.10.7.B, indicate that this loading is approximately 900 g.

The principal function of the overpack is to protect the S/TC against excessive temperatures in the event of a fire. To do so it must sustain the 30-foot drop without a breach (the Sandia tests showed that some plywood delamination could occur without adversely influencing the fire protection). The overpack also cushions the S/TC.

The limiting load of the overpack is not known; however, all that is required is assurance that the overpack will protect the S/TC from excessive temperatures under fire conditions and provide some shock absorption. The Sandia tests showed that when the overpack was built to the specifications developed, it was capable of sustaining a 30-foot drop and a subsequent fire more severe than the present regulation requires. One test showed that the overpack could experience the fire first and then 30-foot drop with

satisfactory results. The test results are discussed further in Section 3.5 and the paper summarizing the Sandia test results is included in Appendix 2.10.9.

The limiting loadings based on the capsule and S/TC have been compared to the calculated loadings resulting from the 30-foot free drop. The calculated drop loadings are developed in Appendix 2.10.5. They are summarized in Table 2.7.1.1 as g loadings for each of the drop orientations of interest. Comparison is also presented as factors of safety associated with containment and shielding. The factors of safety are the ratio of the limiting loadings as expressed in the g's divided by the maximum g loadings calculated for each of the 30-foot drop orientations. The containment factors of safety exceed about 60 and the shielding factors of safety exceed 4.2.

A qualitative appraisal of the effects of each of the drop orientations is provided in the following paragraphs:

2.7.1.1 End Drop

1. Bottom Strike

For the end drop in the upright position, the principal energy absorption is taken by the package skids. The skids will crush, or possibly buckle, the unit energy absorption being about the same. The Wooden Protective Jacket will absorb some of the energy elastically, but this effect is small. The average loading for this drop is calculated to be approximately 180 g. Load calculations are shown in Appendix 2.10.5.A.

Little effect on the S/TC and on the source capsule is expected. The load on the S/TC would be taken by the normal cask support arraignment, as well as by a bearing load against the lead filled plug and flange of the Shell Assembly. Loads on the totally enclosed capsule would be in combined bearing and shear and of a magnitude well below any permanent deformation.

The principal package damage would be to the Steel Shell of the overpack. Integrity of the shielding and containment would be maintained.

2. Top Strike

For the direct, inverted drop, the strike would take place on the cross shaped steel angles, reinforcing the cover of the Steel Shell. The energy absorption would be taken by crushing of either the steel angle or the wood of the protective jacket, with the latter being more likely. Any

TABLE 2.7.1.1 FREE DROP G LOADINGS AND MINIMUM FACTORS OF SAFETY - HYPOTHETICAL ACCIDENT CONDITIONS

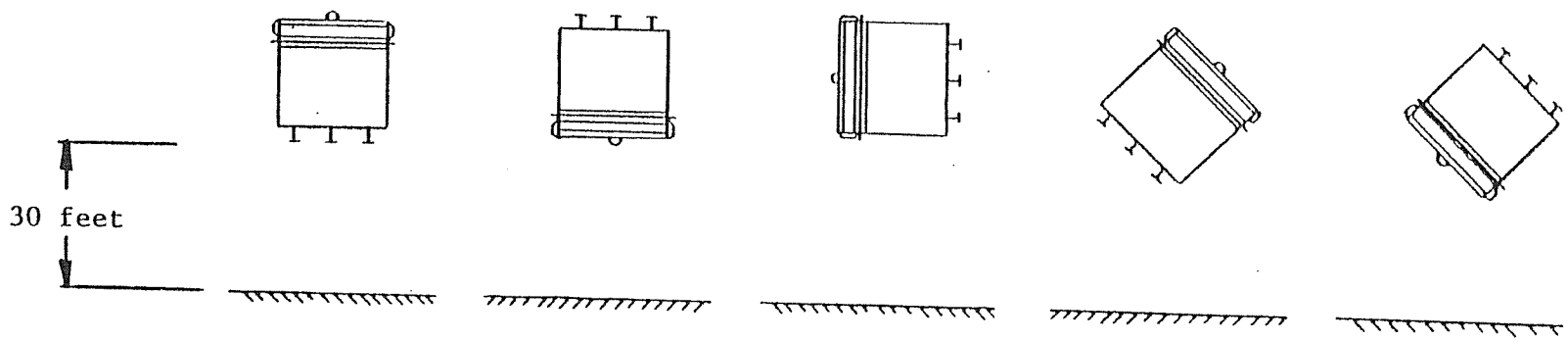

DROP ORIENTATION	End Drop		Side Drop	Oblique Drop	
	Bottom	Top		Bottom Edge	Top Edge
g Loadings	180	215	180	65	65
Containment Factor of Safety (1)	70	59	70	194	194
Shielding Factor of Safety (2)	5	4.2	5	14	14

(1) g loading to shear ultimate strength in source encapsulation steel ÷ imposed g loading

(2) g loading to shear ultimate strength in cover botls ÷ imposed g loading.

buckling of the steel angle would present equivalent resistance. If the energy absorption is taken essentially by the wooden jacket, calculations indicate that the loading would be approximately 215 g. The load calculations are shown in Appendix 2.10.5.B.

There is an additional energy absorbing mechanism for the inner container in the inverted position. The inner cask lifting bail could crush the wood of the protective jacket from the inside under the inertial loading of the S/TC. This effect was not included in calculating the inertial loading, although it would serve to reduce the loading.

As in the case of the upright end drop, the inverted end drop does not result in adverse effects on either the shielding or the containment capability of the capsule or S/TC. The heaviest loads on the S/TC are distributed bearing loads and the capsule stresses are well within the elastic limit.

The principal package damage would be to the Steel Shell and locally to the Wooden Protective Jacket. Local penetration to the Wooden Protective Jacket would be less than two inches of the total top thickness of nine inches. The integrity of the shielding and containment would be maintained.

2.7.1.2 Side Drop. In the side drop most of the energy absorption is taken by the crushing of the shock rings on the Wooden Protective Jacket. The remaining energy is dissipated in deflecting the body of the protective jacket. A small contribution to energy absorption is provided by the crushing of the enclosing Steel Shell. Crushing of the shock rings is calculated to impose a 180 g loading. Calculations are shown in Appendix 2.10.5.C.

The capsule loads will not result in stresses exceeding the elastic limit. The containment capability of the capsule will not be impaired.

One loading on the S/TC is End Cover bolt shear. The maximum loading on the bolts occurs if the plane of the Cover face is perpendicular to the striking surface. The maximum load can be calculated as the product of the Cover weight and the g loading, or 74 pounds x 180 = 13,300 pounds. The eight ½-13 UNC bolts have a minimum root diameter of 0.400 inches for a total shear area of 1.008 in.^{2}. The associated shear stress is 13,000/1.008 = 13,200 psi. For SAE Grade 8 Steel bolt material at the maximum temperature of 300°F, a shear stress of 0.55 (120,100) = 66,000 psi would have to be exceeded to reach yield conditions (see Appendix 2.10.7, B3). The safety factor to yield is 5.

Another loading on the S/TC results in End Cover bolt tension. The maximum loading on the bolts occurs when the plane of the Cover face is parallel to the striking surface. The maximum load can be calculated as the product of the g loading and the combined wright of the drum (310 pounds), the maximum weight of the source capsules and shield plugs (202 pounds), and one Cover (62 pounds) or 180 g x 574 = 103,300 pounds. The corresponding tensile stress produced in the bolts would be 103,000/1.008 = 102,500 psi. The minimum yield strength of the bolt material at 300°F is 120,000 psi. The resulting factor of safety to yield is 1.17. This calculation does not take any credit for the fact that the S/TC fits very snugly in the WPJ and, in the event of a side drop, the S/TC would get considerable support from the side wall of the WPJ.

No change in shielding configuration results from the side drop.

Damage to the package from this drop would be crushing of the shock rings of the Wooden Protective Jacket and crushing of the external Steel Shell. Integrity of the shielding and containment would be maintained.

2.7.1.3 Corner Drop. Not Applicable

2.7.1.4 Oblique Drop. The Oblique drop results in a strike on the cylindrical edge of the package. While in some orientations crushing of the Steel Shell appurtenances provide some energy absorption, the principal energy dissipation mechanism is crushing of the edge of the Wooden Protective Jacket. With the package center of gravity directly over the strike, the calculated loading of the S/TC is approximately 65 g. The results are the same for the top edge or bottom edge drop. The calculations are provided in Appendix 2.10.5.D.

Loads on the capsule will not result in stresses exceeding the elastic limit and the containment capability of the capsule will not be impaired.

The limiting load on the S/TC taken as shear on the End Cover bolts is below the failure limit by a factor of 14.

Damage to the package from this drop would be crushing the end shock rings of the Wooden Protective Jacket and also crushing sections of the external Steel Shell. Integrity of the shielding and containment would be maintained.

2.7.1.5 Summary of Results. Discussion of the condition of the package is provided under each of the preceding drop configurations. Summary of the loadings and factors of safety are provided in Table 2.7.1.1.

2.7.2 Crush

Not applicable

2.7.3 Puncture

Free drop of the package through a distance of one meter (40 inches) onto the standard, six-inch diameter cylindrical bar was examined analytically for all of the principal drop configurations and damage sensitive parts of the package. The local package deflection and g loadings were estimated for each of the drop configurations. In all cases the strike was considered as being located directly under the center of gravity of the package. The calculations are presented in Appendix 2.10.8. Results are summarized in Table 2.7.2.1.

The local deflections range from about 0.6 inches for a strike against the bottom plate of the package (the bar missing the skids) to about 1.4 inches for several of the orientations in which it was postulated that all of the energy was absorbed in crushing the wood of the protective jacket. The associated loadings range from 73 g for smaller deflections to 25 g for the larger ones.

In all cases the overpack Steel Shell would experience some permanent deformation and when the strike is directly on the 12-gauge Steel Shell material, some perforation and tearing might occur. Since the Steel Shell is neither lead containing nor essential to fire protection, a shell tear does not measurably reduce the effectiveness of the package. The loadings are not high and there would be no damage to the S/TC or its contents.

Table 2.7.2.1

PUNCTURE SUMMARY

	Deformation or Deflection (in.)	Loading, g	Steel Shell Penetration	S/TC Damage
Bottom				
Plate strike	0.58	70	Not Likely	None
Skid Strike	1.6	25	Not Likely	None
Top	0.9	45	Possibly	None
Side	$0.9 < \delta < 1.4$	45	Possibly	None
Oblique (edge)	$0.9 < \delta < 1.4$	45	Possibly	None

Table 2.7.3.1

MAXIMUM PACKAGE TEMPERATURES UNDER HYPTOHETICAL ACCIDENT CONDITIONS [1]

Inside WPJ Surface	370°F	(188°C)
S/TC Surface	385°F	(196°C)
S/CT Shell Liner and Drum O.D. (Local Max)	450°F	(232°C)
SC/T Drum Liner (Local Max)	545°F	(285°C)
Source Capsule Surface	670°F	(355°C)

[1] 240-watt source corresponding to 15,000 curies of cobalt-60 and a 1,475°F one half hour duration thermally radioactive fire.

2.7.4 Thermal

2.7.4.1 Summary of Temperatures and Pressures. Maximum package temperatures under HAC are summarized in Table2.7.3.1 which is identical to Table 3.5.1. The upper limit pressure is calculated to be 16.6 psig (see Appendix 3.6.4), although even under maximum internal heating and post fire temperature conditions the pressure would likely be very little above atmospheric pressure.

2.7.4.2 Differential Thermal Expansion. The differential thermal expansion of the S/TC components is essentially the same as those presented in 2.6.1.2 associated with the maximum normal transport condition. While the peak post fire temperatures are about 120°F higher than the corresponding normal transport peak temperatures, the temperature differences that determine the deformations and stresses remain the same.

2.7.4.3 Stress Calculation. As discussed above, the stress calculations presented in 2.6.1.3 for the maximum normal transport conditions also apply to the maximum hypothetical accident conditions.

2.7.5 Immersion – Fissile Material

Not applicable, no fissionable material involved.

2.7.6 Immersion – All Packages

The package is only authorized to transport special form sources and, as such, primarily relies upon the special form capsule for containment. While a potential breach of the seal under 50 feet of water would permit water to enter the shielded container, no loss of containment or shielding would result due to the inherent integrity of the special form capsule.

2.7.7 Deep Water Immersion Test

Not applicable, as the package is not authorized for 10^5 A_2

2.7.8 Summary of Damage

The principal safety systems can be characterized as containment and radiological shielding. Their identity is functional, and their operation is passive. Many of the pieces of hardware serve both functions. No active hardware, such as valves or coolant system components, are used.

The primary containment system is the special form source capsule. The S/TC End Covers hold the source capsule in place within the drum and confine the latter in a fixed position within the S/TC. The End Covers are gasketed and seal the drum cavity, principally from external contaminants. Satisfactory operation of the shielding system depends upon the lead and tungsten alloys remaining in place under both normal transport and accident conditions. Shielding within the drum cavity is held in place by the End Covers and the lead shielding within the Shell Assembly will remain in place under the design basis accident conditions.

Under the drop and fire accident sequence, the S/TC sustains no significant damage and remains functionally unimpaired. In the drop, anticipated loadings are significantly less than limiting (potentially damaging) loadings and in the fire the peak calculated surface temperature of the source capsule is 670°F. The localized peak lead temperature remains 73°F below the melting point.

Under the drop and fire accident sequence it is not anticipated that the overpack would be reusable, although it would have properly served its principal function.

2.8 Accident Conditions for Air Transport of Plutonium

Not applicable.

2.9 Accident Conditions for Fissile Material Packages for Air Transport

Not applicable.

2.10 Special Form

The radioactive sources intended for transport in the present package meet the requirements of special form material as specified in 10 CFR 71.75, as well as corresponding U.S. Department of Transportation and International Atomic Energy Agency documents, as applicable, and are appropriately certified. A typical teletherapy source capsule is described in Chapter 4 on containment and shown in Figures 4.1 and 4.2. Special form pencil sources are also transported in this package.

2.11 Fuel Rods

Not applicable

2.10 Appendix

2.10.1 Tie Down Analysis

Requirement: "If there is a system of tie down devices which is a structural part of the package, the system must be capable of withstanding, without generating stress in any material of the package in excess of its yield strength, a static force applied to the center of gravity of the package having a vertical component of two times the weight of the package with its contents, a horizontal component along the direction in which the vehicle travels of ten times the weight of the package with its contents, and a horizontal component in the traverse direction of five times the weight of the package with its contents." 10 CFR 71.45 (b) (1)

Loads: The loads are diagrammed at the top of Figure 2.10.1.1. Based on a maximum package weight, W, of 6,000 pounds, the loads are:

- Horizontal, direction of travel, 10W = 60,000 lbs.
- Horizontal, transverse, 5W = 30,000 lbs.
- Vertical, 2W = 12,000 lbs.

The weight is considered included in the vertical component.

Arrangement: A representative shipping arrangement is shown in Figure 2.10.1.1. The attachment can be made to the frame of a truck or to a cargo container, for example. The rails are aligned transversely to the direction of motion. The largest load (60,000 pounds in the direction of travel) is the one analyzed.

Forces: A force diagram, projected in a vertical plane passing through the center of gravity (c of g) and aligned with the direction of travel, follows:

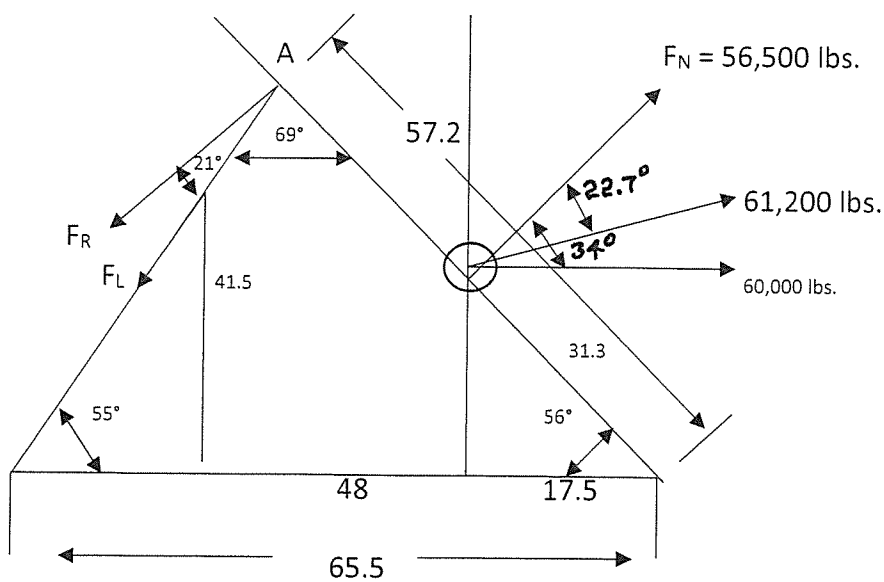

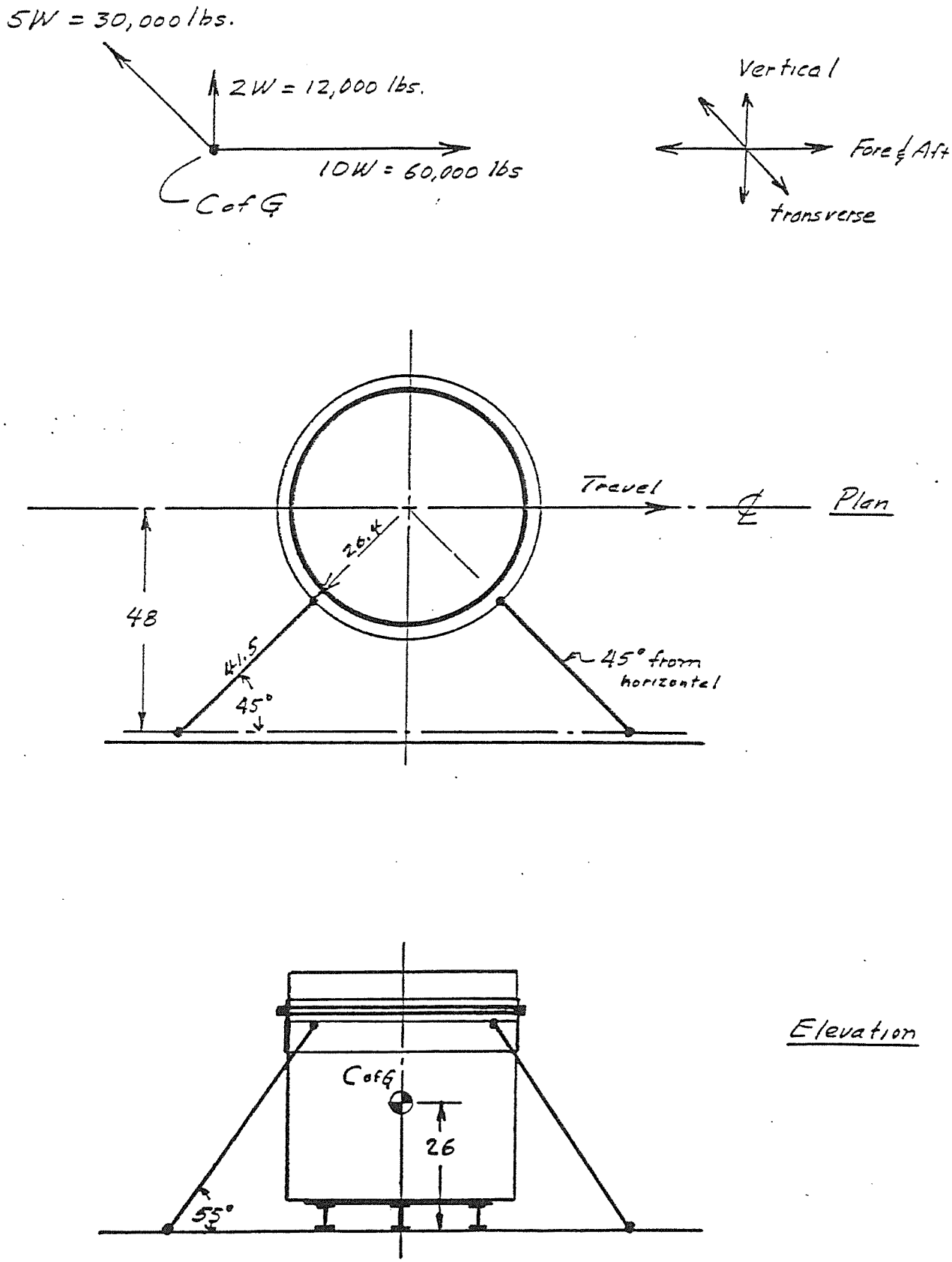

Figure 2.10.1.1 Loads and Tiedown Arrangement

A moment balance about point C, which corresponds to the outermost edge of the support rail, provides the reaction force, F_R:

$$56{,}500\ (31.3) - F_R\ (57.2) = 0$$
$$F_R = 30{,}900 \text{ pounds}$$

and the component of the tie down force in the central vertical plane, F_L:

$$F_L = F_R/\cos 21° = 30{,}900/.934 = 33{,}100 \text{ pounds}$$

from which the tension, T, in each of the two tie down lines opposing the applied force can be determined from the geometry, recognizing that the tie down lines are angled 45° to the horizontal, as well as to the direction of travel:

$$T = F_L \cos 55°/2 \cos^2 45°$$
$$= 33{,}100\ (.574) = 19{,}000 \text{ pounds}$$

This result is representative and not very sensitive to reasonable changes in the angles of the tie down lines.

Component Adequacy: Reference Drawing 240116

1. Bracket eye – shear
   Shear area = 1.45 in.^{2}
   Load Capacity = ys (.55) (area)
   = 36,000 (.55) 1.45
   = 28,700 pounds
   Maximum Load = 19,000 lbs. – no yielding
   Safety factor – 1.5

2. Bracket – tension/compression
   For a vertical load, each bracket
   Section area of two 3 x 3 x ⅜ inch angles = 3.18 in.^{2}
   Load Capacity = ys (area)
   = 36,000 (3.18) = 114,000 pounds
   Maximum Load = 19,000 sin 45° = 13,500 – no yielding
   Safety factor – 8.4

3. Support band and body flange – shear
Downward force on bracket to reach shear yield limit in support ring and body flange cross section only.
Section area = 3.68 in.^{2}
Load Capacity = 36,000 (.55) (3.68) = 72,800 pounds
Maximum load = 13,500 pounds – no yielding
Safety factor – 5.4

4. Bracket attachment weld – shear
Weld length = 8 in. (sides only considered)
Minimum weld section = (¼) (.707) (8) = 1.41 in.^{2}
Weld efficiency = 75%
Load Capacity = 2 (36,000) (.55) (1.41) (.75)
= 41,900 pounds
Maximum load = 13,500 pounds – no yielding
Safety factor – 3.1

5. Steel Shell – Tension/Compression
Tension in Steel Shell cover:
Area = 48.5 (.1072) = 16.3 in.^{2}
Load Capacity = 36,000 (16.3) = 587,000 pounds
Upper limit load = 13,500 (4) = 54,000 pounds – no yielding
Safety factor – 10.9

Compression in Steel Shell:
Load Capacity same as above
Load – none from prescribed load conditions

6. Support Band and Steel Shell Flange – Hoop Stress

The Wooden Protective Jacket loads the Steel Shell sideways with restraint from two of the four brackets. Is it postulated that the principal WPJ restraint is transmitted by the hoop tension through the support band and Steel Shell closure flanges. A bracket covers three inches of the total periphery of the Steel Shell, which can be represented as a central angle, θ. For the 48.5 inch diameter Steel Shell:

$$\theta = 3 \times 360°/\pi\ 48.5 = 7°$$

From a horizontal force balance on the bracket, the relationship between the hoop tension load, T, and the horizontal component of the restraining load, R, is:

$$2\ T \sin \theta = R$$

The tension load to yield is the support band and Steel Shell flange cross sectional area multiplied by the yield strength of the A-36 material. The cross sectional area is 3.62 in.^{2} The hoop tension load to yield is:

$$\sigma\ ys\ (area) = 36{,}000\ (3.62) = 130{,}000 \text{ pounds}$$

From which the limiting, restraining load is:

$$R = 2\ (130{,}000) \sin 7° = 31{,}760 \text{ pounds}$$

The maximum horizontal component of the tie down load is 13,500 pounds – there is no yielding.

Other loads: The 10W + 2W load governs the design. The transverse 5W + 2W load results in similar but lesser loadings.

2.10.2 Thermal Stress in Drum and Shell Assemblies

A. The Drum Assembly

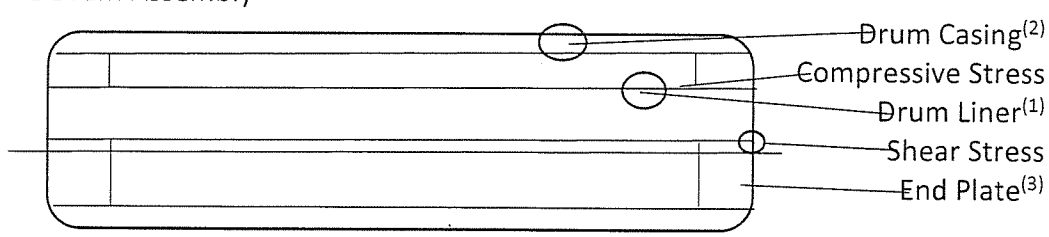

The drum liner and casing are at different average temperatures when the drum contains a source capsule. This results in tension/compression stresses in the liner and casing and shear stresses in the weld joints. In calculating the stresses, it is postulated that the ¾ inch thick end plates do not bend and that there is not interaction with the lead or other encapsulated shielding material. The maximum temperature difference between liner and casing, averaged over the length, is calculated in Section 3.6.5 and was found to be 33°F at an average temperature level of 297°F. From a force balance on the drum (the subscripts refer to liner, casing and end plate):

$$A_1\sigma_1 + A_2\sigma_2 = 0 \qquad (1)$$

Since the elongation of the liner is equal to that of the casing,

$$\delta_2 = \sigma_2\ell_2/E_2 = \delta_1 = \sigma_1\ell_1/E_1 + \ell\alpha\Delta T$$

And $\ell_1 = \ell_2$ and $E_1 = E_2$

$$\sigma_2 - \sigma_1 = E \propto \Delta T \qquad (2)$$

Combining (1) and (2)

$$\sigma_1 = -\left[\frac{A_2}{A_1 + A_2}\right] E\alpha\Delta T \qquad (3)$$

$$\sigma_2 = -\left[\frac{A_1}{A_1 + A_2}\right] E\alpha\Delta T \qquad (4)$$

A_1 = 2.38 in.^{2}, A_2 = 4.712 in.^{2}, E = 27.0 x 10^6 psi @ 300°F

Coefficient of thermal expansion, α = 9.5 x 10^{-6} in /in °F @ 300°F and

$$\sigma_1 = -\left[\frac{4.71}{2.38+4.71}\right] 27\ x\ 10^6\ (9.5\ x\ 10^{-6})\ 33 = -5{,}620 \text{ psi}$$

$$\sigma_2 = \left[\frac{2.38}{2.38+4.71}\right] 27\ x\ 10^6\ (9.5\ x\ 10^{-6})\ 33 = 2{,}840 \text{ psi}$$

The total load is:

$$-\sigma_1\ A_1 = \sigma_2\ A_2 = 2{,}840\ (4.712) = 13{,}380 \text{ pounds}$$

The shear load on the welds are:

T = 13.380/.095 π (2.75) 3 = 5,430 psi	End plate to liner weld joint
T = 13,380/.187 (7.81) π = 2,900 psi	End plate to casing weld joint

Comparison with allowable stresses:

Member	Stress, psi	Secondary stress Allowable, psi
Liner	-5,620 (compression)	22,500 (min. Y.S.)
Casing	2,840 (tension)	22,500 (min. Y.S.)
End plate to liner weld joint	5,430 (shear)	12,400 (.55 min. Y.S.)
End plate to casing weld joint	2,900 (shear)	12,400 (.55 min. Y.S.)

If an internal pressure is added to the loading, equation (3) becomes:

$$\sigma_1 = -\left(\frac{A_2}{A_1 + A_2}\right) E\alpha\Delta T - \left(\frac{A_3}{A_1 + A_2}\right)p \qquad (5)$$

Where A_3 is the area over which the pressure, p, acts. An analogous term is added to equation (4). Using the evaluation basis 15 psi as the differential loading acting over the net drum end area,
$A_3 = (\pi/4)\,(8.187)^2 - 3\,(\pi/4)\,(2.56)^2 = 37.2$ in.^{2}, the liner compressive stress becomes 5,620 + (37.2/(2.38 + 4.71)) 15 = 5,620 + 79 = 5,699 psi, an increase of 1.4 percent. The other stresses change correspondingly.

B. The Shell Assembly

The relationships above also apply to the Shell Assembly. Subscript 1 now refers to the shell liner and subscript 2 to the shell. The spherical shell is postulated to behave as a coaxial cylinder of equivalent thickness and of great circle diameter. The spherical shell is more flexible than the postulated coaxial cylinder so that the calculation overestimates the shell liner stresses. The maximum temperature difference between the shell and the liner is calculated in Section 3.6.5 and was found to be 15°F at an average temperature level of 273°F.

$$A_1 = \pi\,(8.44)\frac{3}{16} = 4.97\ in.^2$$

$$A_2 = \pi\,(24.38)\frac{3}{8} = 28.7\ in.^2$$

$E = 28.4\ x\ 10^6$ psi at 273°F

$\propto = 7.93 \times 10^{-6}$ in./in. °F at 273°F

$$\sigma_1 = -\left(\frac{28.7}{4.97+28.7}\right) 28.4 \times 10^6\ (7.93 \times 10^{-6})\ 15 =$$

-(.852) 3,380 = -2,880 psi

$$\sigma_2 = \left(\frac{4.97}{4.97+28.7}\right) 28.4 \times 10^6\ (7.93 \times 10^{-6})\ 15 =$$

(.148) 3,380 = 500 psi

The total load is:

$\sigma_2\ A_2$ = 500 x 28.7 = 14,350 pounds

The shear load on the shell liner welds:

T = 14,350/x $\pi d = \pi$ 8.625 (3/16) Face plate to liner weld joint

= 2,825 psi

Comparison with allowable stresses:

Member	Stress psi	Secondary Stress Allowable, psi	Factor of Safety
Shell Liner	-2,880 (compression)	31,200 (min. Y.S.)	10.8
Face plate to Liner weld joint	2,825 (shear)	17,200 (.55 min. Y.S.)	6.1

2.10.3 Free Drop – Normal Transport

The analysis of free drop under normal transport conditions follows that of the hypothetical accident conditions (HAC), except for the level of loading (see Appendix 2.10.5). The total energy to be absorbed in the normal transport drop is 6,000 pounds x 48 inches = 288,000-pound inches.

A. End drop – Bottom Strike

The impact load is distributed between the support skids, the Wooden Protective Jacket bottom and the support base of the S/TC. Initially, the most compliant of the three is the Wooden Protective Jacket (WPJ) plywood bottom, which deflects elastically. However, before the plywood crushing stress is reached (taken at 6,000 psi) the load on the skids exceeds the buckling/crushing limit and the remainder of the impact load is absorbed by the skids. The average post yield compressive load resistance of the skids is 1,150,000 pounds (see Appendix 2.10.5.A). Until this load is reached, the energy absorbed in the WPJ is $U = \sigma^2 A\ell/2 E_T$ where σ, the compressive stress in the plywood is 1,150,000/A = 1.150,000/489 = 2,350 psi, A = support base area = 489 in.^{2}, ℓ, the WPJ plywood thickness is 8.25 inches, and E_T, the elastic modulus of the wood perpendicular to the grain in the tangential direction, is 10^5 psi from which U = 111,000 pound inches. The remaining impact energy, 288,000 – 111,000 = 177,000-pound inches is absorbed by the skids. The total deflection is the sum of that of the wood plus the skids, 2,350 x $8.25/10^5$ = .194 inches and 177,000/1,150,000 = .154 inches, respectively. The total deflection is 0.348 inches with an associated loading on the S/TC of 140 g.

B. End drop – Top Strike

As in the HAC drop, the strike would take place on the 2.5 x 2 x 5/16-inch cross shaped reinforcing angle iron that is welded to the top of the Steel Shell Lid. For the HAC drop (see Appendix 2.5.10.B), it was shown that a load of about 1,200,000 pounds needed to be developed before either the angle iron or the WPJ plywood would commence energy absorption by the crushing. Energy absorption by the elastic response of the plywood was ignored. Under the normal transport drop, the elastic deflection of the wood beneath the cross shaped reinforcing angle iron absorbed almost all of the energy before very much crushing commences. Taking the limit of proportional response for the wood at 6,000 psi, as $(6000)^2$ x (192) x (8.25)/2 x 10^5 = 285,000-pound inches which is approximately the 288,000-pound inches that must be absorbed. The associated deflection is 6,000 x $8.25/10^5$ = 0.495 inches, resulting in a loading of 100 g on the S/TC.

C. Side Drop

Neglecting crushing of the Steel Shell, the total drop energy would be taken by crushing the rings of the WPJ. Using a value of 6,000 psi for the dynamic crushing pressure (see Appendix 2.10.6), the deflection can be calculated from the volume of the displaced wood. The following table is constructed in the same manner as described in the cited reference:

Deflection H In.	h -D	Segment Area ÷D^2 (1)	Segment Area In.^{2}	Volume (13.5 x Area) in.^{3}	Energy Absorbed (Vol., in.^{3} 6,000 psi) Lb. in.
0.25	.0052	.00066	1.52	20.52	123,120
0.50	.0104	.0014	3.23	43.6	261,630
1.0	.0208	.0040	9.216	124.4	746,500
2.0	.0417	.0012	25.8	348.2	2,089,800

(1) From Table, Page 35, Marks Handbook, Fourth Edition

Interpolating to obtain the deflection, h, corresponding to the energy absorption of the drop, 6,000 x 48 = 288,000 pound inches, yields 0.554 inches with a corresponding inner cask loading of 87g.

D. Oblique Drop

Referring to the nomenclature, relationship, and table in HAC oblique drop analysis (see Appendix 2.10.5.D), the displaced volume of plywood resulting from the strike is 288,000 pound inches / 6,000 psi (DCP) = 48 in^3 for the normal transport drop. Interpolating in the table: u = 21°; c = r cos u = 24 cos 21 = 22.4 in.; h = r – c = 24 – 22.4 = 1.58 in.; and the deflection is 1.58 √2/2 = 1.12 inches. The resulting loading on the S/TC is 43 g. The calculation is applicable to either a top or bottom edge drop.

2.10.4 Penetration

The potential for penetration of the Steel Shell by a 13 pound, 1¼ inch diameter vertical steel cylinder dropped from a one-meter height can be estimated from the relationship developed from determining the outer shell thickness, t, of lead shielded casks to prevent penetration from a one meter free fall onto a six inch diameter punch:

$$t = (W/S)^{0.71}$$

Where W is the weight of the cask and S is the ultimate strength of the outer shell material (Cask Designers Guide, ORNL-NSIC-68, Page 17). Rearranging to determine the weight, W, that will withstand the punching action for a given thickness and material:

$$W = St^{1.41} = 58{,}000\ (.107)^{1.41} = 2{,}480 \text{ pounds}$$

The 13-pound weight might dent, but not penetrate, the 12 gauge Steel Shell by a large margin.

2.10.5 Free Drop – Hypothetical Accident Conditions

A. Bottom End Drop – Direct Fall onto Skids

Total energy = 30 x 12 in. (6,000 pounds) = 2,160,000 pound inches

Skids: Five inch by 10 pound I beams

ASTM A-36 Steel S_{ys} = 36,000 psi
S_{ts} = 58,000 psi
Web thickness - .210 inches
Two outboard skids, 34 inches long
Center skid, 48 inches long
Web area – 2 (34)(.210) + 48 (.210) = 14.3 + 10.1 = 24.4 in.^{2}

The free drop energy absorption is most likely to be taken by one or more of the following package components:

- Skids, by crushing or buckling;
- WPJ bottom, by elastic deflection and crushing; and,
- S/TC support plate by crushing or buckling.

The energy absorption distribution depends upon the load deflection characteristics of the members. The member having the lowest applied load at which significant deflection occurs will absorb the initial, and perhaps the total, energy. If, in the sequence of package arrest, the load resistance of the initial member increases to the extent that it exceeds that of another member or members, the energy absorption burden is shifted or shared. The load deflection characteristics for the members listed above are estimated in the following:

1. Skids

Load to yield = (36,000 psi) x (24.4 in.^{2}) = 878,000 pounds. Average post yield compressive load resistance, taken as constant with increasing deflection:

$$\left(\frac{1}{2}\right)\left(S_{ys} + S_{ts}\right)(area) = \left(\frac{1}{2}\right)(36{,}000 + 58{,}000)(24.4) =$$
1,150,000 pounds

Load to Buckle Skids

Buckling Stress, S'	Roark, 4th Edition. Table IVA, Page 348
$S' = K[E / (1 - \nu^2)]\,(t/b)^2$	Case 1A

Where K = K (height/length) and v is Poisson's ratio, taken as 0.3 for steel

<u>Center</u>

$(t/b)^2 = (.210/48)^2 = 19.1 \times 10^{-6}$
Height/Length = 5/48
K = 43 (extrapolated)
$S' = 43\,(30 \times 10^6/.91)\,(19.1 \times 10^{-6}) = 27{,}100$ psi
Load = 27,100 (10.1) = 274,000 pounds
Total Load = 813,000 pounds

<u>Outboard</u>

$(t/b)^2 = (.210/34)^2 = 38.1 \times 10^{-6}$
Height/Length = 5/34
K = 30 (extrapolated)
$S' = 30\,(30 \times 10^6/.91)\,(38.1 \times 10^{-6}) = 37{,}700$ psi
Load = 37,700 (14.3) = 539,000 pounds

Either or both loadings could occur, since the threshold is about the same. Crushing is slightly higher and is used for deflection determination, since it yields the higher inertial loading.

2. *Wooden Protective Jacket*

The jacket bottom will respond to loading, elastically at first, with buildup to the dynamic crushing pressure (see Appendix 2.10.6) of the plywood. Extending the elastic range until DCP is reached, the load deflection relation is $\delta = \sigma\ell/E_T$ and the energy absorbed is:

$$U = \sigma^2 A\ell/2\ E_T$$

where σ is the compressive stress on the plywood, psi; A is the loaded area which in this case is the S/TC support base area, (21.5 x 22.75) = 489 in.^{2}; ℓ is the thickness of the bottom, 8.25 inches; and, E_T is the elastic modulus of the wood perpendicular to the grain in the tangential direction, 10^5 psi. The DCP is a cap on the upper level of stress, σ. Using 6,000 psi as the DCP for the plywood stock, the threshold crushing load becomes (DCP) x (support base area) = 6,000 x 489 = 2,930,000 pounds.

3. *S.TC Support Plate*

Cross sectional area = 2 (22.75 +2) (1/2) = 24.8 in.^{2}
ASTM A-516 Gr 70 Steel S_{yp} = 38,000 psi
S_{ts} = 70,000 psi
Load to yield = 38,000 (24.8) = 942,000 pounds
Average post yield compressive load resistance – (1/2) (38,000 + 70,000) (24.8) =1,340,000 pounds for the first ⅛ inch of deflection at which point the 7.5 inch diameter fill opening flange and plug make contact with the WPJ and the load is increased by:

$$6{,}000 \text{ psi} \times (.7854)\ (7.5)^2 = 265{,}000 \text{ pounds}$$

4. *Bottom Drop Summary*

Of the three components in a position to absorb the impact load, crushing of the skids results in the lowest sustained load and most of the energy could be considered absorbed in this manner. The initial energy absorbed by the deflection (compression) of the WPJ bottom, can be calculated if σ A is set equal to the post yield compressive load resistance of the skid (1,150,000 pounds) and the resulting stress = 1,150,000/489 = 2,350 psi used to calculate the absorbed energy U (see Section 2.10.3.A). This results in a value of U = 111,400-pound inches and a deflection of δ = .194. The remaining energy, 2,160,000 – 111,000 = 2,050,000-pound inches, is absorbed by the skids, resulting in a deflection of 2,050,000/1,150,000 = 1.78 inches. The average loading in arresting the drop is:

$$(30 \times 12)/(1.78 + .194) = 182 \text{ g, say } 180 \text{ g}$$

B. Top End Drop

The strike would take place on the 2.5 x 2 x 5/16-inch cross shaped reinforcing angle iron that is welded to the top of the Steel Shell cover. The energy absorption would be by some combination of crushing wood (the WPJ), crushing the angle iron, or buckling the angle iron.

1. *Crushing the WPJ*

The principal crushing would take place at the position of the angle irons. Using dynamic crushing pressure of wood as 6,000 psi and the projected area of the angle iron, the load is:

$$6{,}000 \times (48 \times 2 \times 2) = 1{,}150{,}000 \text{ pounds}$$

2. *Crushing the Steel Angle*

$$\text{Area} = (5/16) \times (48) \times 2 = 30 \text{ in.}^2$$

The post yielded compressive load resistance for the ASTM A-36 steel angle.

$$(½)\ (S_{ys} + S_{ts})\ (\text{area})$$
$$(½)\ (36{,}000 + 58{,}000)\ (30) = 1{,}410{,}000$$

3. *Buckling of the Steel Angle*

Using previously cited relationship from Roark, Page 348:

$S' = K\ (E/1 - v^2)\ (t/b)^2$ $\quad$ $K = K(a/b);\ a/b = 2.5/48 = .052$

$K = 60$ (extrapolated)

$S' = 60\ (30 \times 10^6/.91)\ (.3125/24)^2 = 335{,}000$ psi

This exceeds the compressive crushing stresses; no buckling.

4. Top End Drop Summary

To account for the additional resistance of the 12-gauge steel and some load spreading between Steel Shell and WPJ, the load resistance is taken as an average of Items (1) and (2), or 1,281,000 pounds, rather than the lowest value. The deflection becomes:

2,160,000/1,281,000 = 1.69 inches

And the average loading:

30 x 12/1.69 = 213 g, say 215 g

C. Side Drop

The strike in a side drop would crush the side of the Steel Shell and a corresponding portion of the Wooden Protective Jacket. Most of the drop energy would be dissipated in crushing the shock rings of the WPJ. Using a dynamic crushing pressure of 6,000 psi (see Appendix 2.10.6), the energy that can be absorbed by the six rings is:

6,000 psi x volume of the wood displaced, in.^{3}

The volume of the wood displaced is the area of a circular segment, h = 2 inches deep on a 48-inch diameter, D, multiplied by 2.25 x 6, the thickness of all six rings. For h/D = 2/48 = .0417, the segment area is $(48)^2$ x (.0112) = 25.8 in.^{2} (from Marks Handbook, 4th Edition, Page 35, or see Appendix 2.10.6). The ring volume displaced is 25.8 x 2.25 x 6 = 348 in.^{2} and the total energy absorbed is 6,000 x 348 = 2,090,000 pounds inches. This is close enough to the total drop energy of 6,000 pounds x (30 x 12) in. = 2,160,000 pounds, to the amount to total absorption. The resulting loading is 30 x 12/2 = 180 g.

D. Oblique Drop

The most severe oblique or edge drop will be that which the axis of the package is inclined approximately 45°, because this places the center of gravity over the point of impact. The Steel Shell with associated attachments and reinforcements can absorb impact energy in many orientations, but there are a few for which the principal impact absorber will be the Wooden Protective Jacket. Upon impact the crushed edge of the wooden jacket can be represented as an ungula of a right circular cylinder. To determine the deflection and loading using the DCP method, it is necessary to calculate the volume of the ungula, which is:

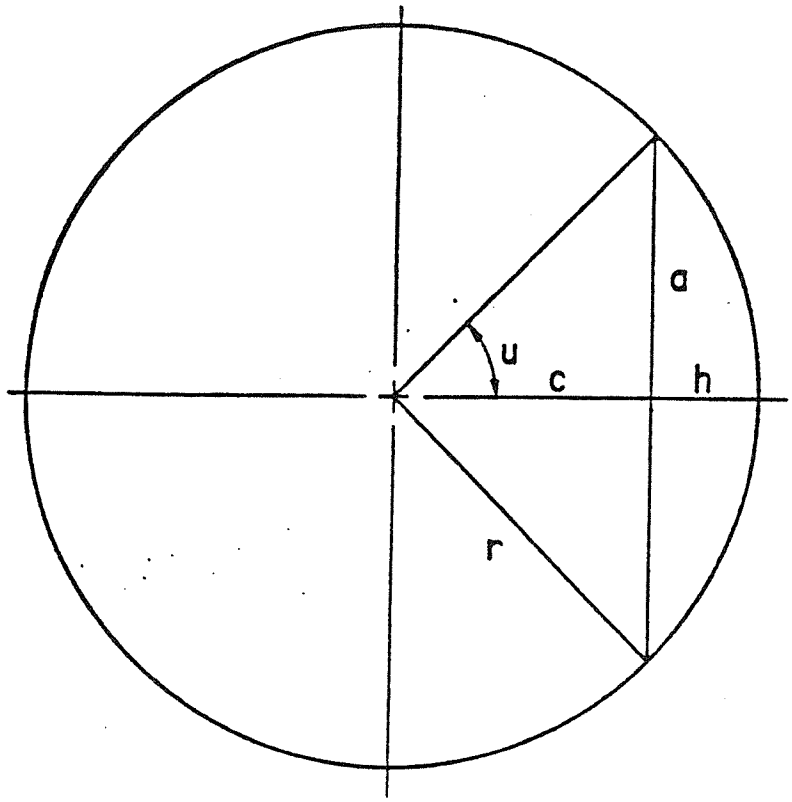

$$\text{Tan. } \theta = \frac{H}{h}$$

$$c + h = r$$

$$\frac{a}{r} = \sin. u$$

$$\frac{c}{r} = \cos. u$$

$$B = \frac{1}{2} r^2 (2u - \sin. 2u)$$

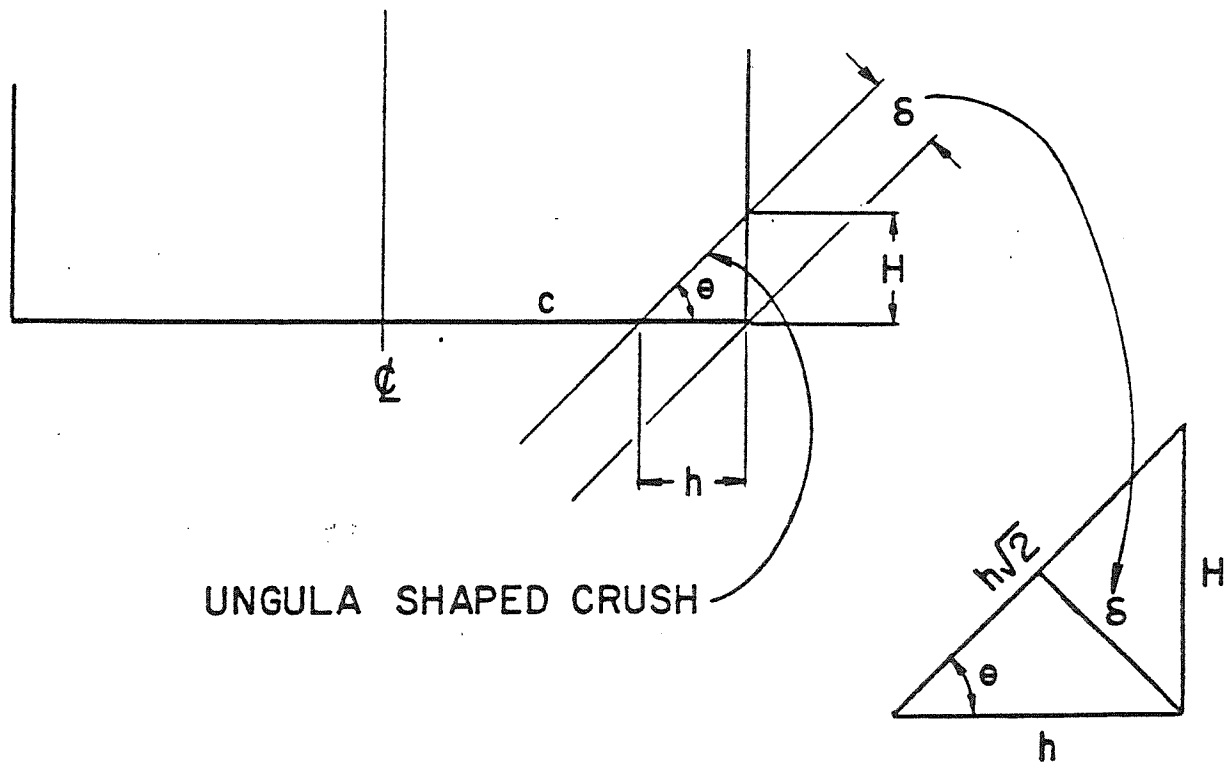

$$\delta = h\frac{\sqrt{2}}{2} \text{ @ } \theta = 45°$$

$$Vol = H\,[(2/3)\,a^2 - cB]\,/[r-c]$$ (Marks Handbook, 4th Edition, Page 108)

Where the geometric parameters are defined in the accompanying sketch. The expression for the volume can be re-written as a function of r, θ and u only.

$$Vol = r^3 \tan\theta\,[2/3 \sin^3 u - u \cos u + \sin u \cos u]$$

And tabulated as a function of u (θ = 45°).

U, degrees	Volume @ θ = 45°, in.^{3}
5	0.467
10	4.303
15	14.8
20	34.0
30	109.4
45	312
60	592
75	845

The drop energy divided by the DCP yields the volume displaced in the strike: 2,160,000/6,000 = 360 in.^{3}. Interpolating from the table above gives u = 47.5°, from which the values of c = 16.2 in., h = 7.79 in., and δ = 5.5 in. can be calculated. The average loading is 30 x 12/5.5 = 65 g. The calculation is applicable to either a top or bottom edge drop.

2.10.6 Dynamic Crushing Pressure of Plywood

One of the principal functions of the Wooden Protective Jacket is to serve as an impact absorber to protect the S/TC under accident conditions. This function is fulfilled by crushing some of the overpack plywood. In evaluating various accident scenarios, convenience would be served by having an approximate relationship between the energy absorbed and the plywood crushed, much as the dynamic flow pressure concept is employed in evaluating a strike on a shielded container.

A. A reasonable estimate of the energy required to crush overpack plywood can be derived from information provided by the Sandia drop tests. Figure 2.10.6.1 (this is Figure 21 on Page 228 of SC-RR-65-98, Proceedings, International Symposium for Packaging and Transportation of Radioactive Materials), shows a 4,000 pound package, with a wooden protective jacket having five two inch thick and two inch wide shock rings. The package had been dropped 30 feet in the horizontal

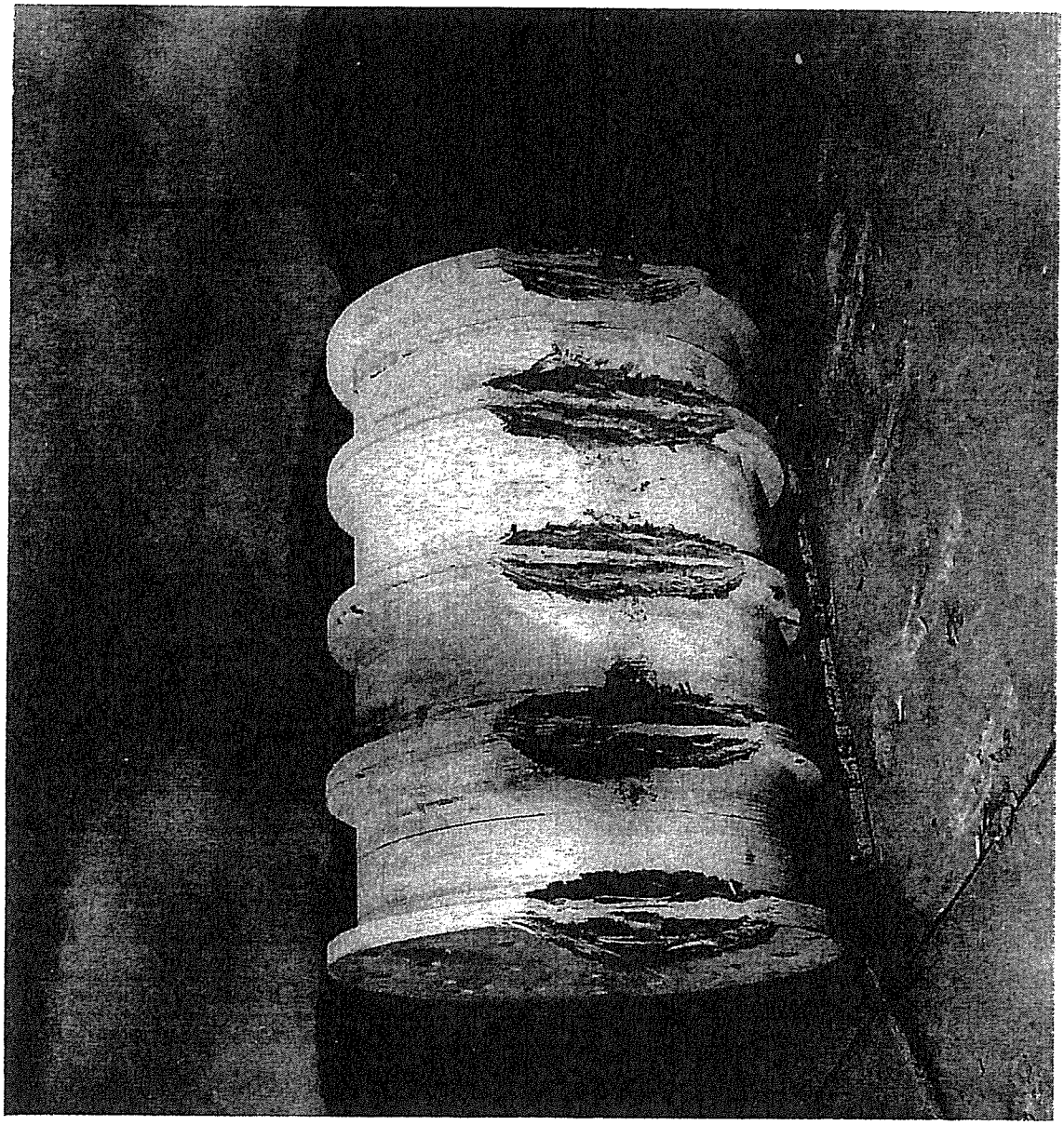

Figure 2.10.6.1 (Figure 21 of referenced cited)

Again, for comparison, the results of a 30-foot drop flat on one side are shown. Note the very effective shock mitigation by the five rings. The main body of the shell is almost untouched. All three of the unburned containers shown in this and preceding photographs are of identical construction.

position (side drop). The rings were completely crushed on the side of the package that took the strike. As pointed out in the caption, the main body of the shell is almost untouched. Probably 90 percent of the drop energy was absorbed in crushing and displacing the shock ring plywood. Postulating that all of the drop energy was used in crushing and displacing a two inch high segment of the jacket rings (as represented by the cross hatching in the accompanying sketch) the capability of the plywood material to act as an impact absorber can be determined in a manner analogous to the dynamic flow pressure (DFP) determination for lead shielded casks (see Cask Designers Guide, ORNL-NSIC-68, Pages 57-64). The volume of the segment can be determined from tables (Marks Handbook, 4th Edition, Page 35) as a function of ring height to diameter:

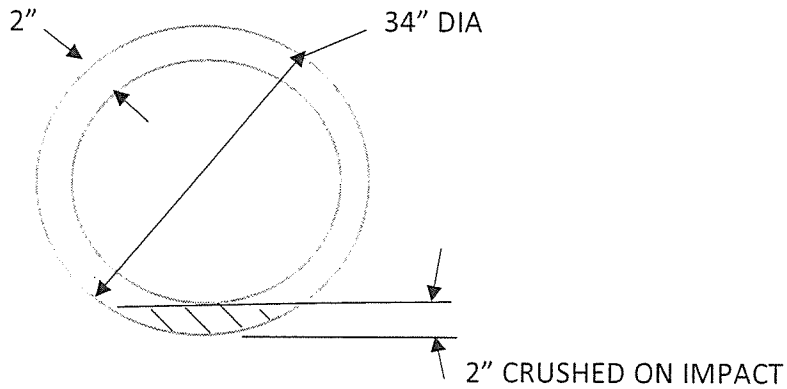

h/D = 2/34 = 0.0588
From the table, segment area/D^2 = 0.0187
Segment area = 0.0187 $(34)^2$ = 21.6 in.^{2}
Total volume displaced = 21.6 x 2 (in.) x 5 (rings) = 216 in.^{3}

The total energy to be absorbed from the drop is:

4,000 pounds x 30 feet x 12 in./ft. = 1,440,000-pound inches

Calling the unit energy absorption, the dynamic crushing pressure (DCP) in analogy to the DFP:

DCP = 1,440,000/216 = 6,700 psi

Recognizing that some of the drop energy was absorbed in gross deflection of the package, a reasonable upper limit value for DCP would be 6,000 psi.

B. Another method for determining the DCP of wood is provided by the standard hardness test (reference: Wood Handbook, U.S. Department of Agriculture, Handbook No. 72, Forest Products Laboratory, Forest Service, 1955, Page 69 and Table 12, Page 75). Hardness represents the resistance of wood to wear and marring. The hardness rating is given in pounds and is taken as the force needed to imbed a 0.444-inch diameter steel ball into the wood to a depth of one half of the ball diameter. Hardness numbers for Douglas Fir (not plywood) taken from Table 12 of the reference are as follows:

Type of Douglas Fir	% Moisture	Hardness, Pounds End	Hardness, Pounds Side
Coast	38	570	500
	12	900	710
Intermediate	48	510	450
	12	710	600
Rocky Mountain	38	450	400
	12	740	630

The hardness is the force required to push the ball into the wood the last few thousandths of an inch, δ, at the full diameter of the ball. The force x δ divided by the volume displaced, which is the ball projected area x δ is the DCP:

$$DCP = Hardness \times \delta / [\pi/4(.444)^2 \times \delta] = Hardness/.1548$$

Hardness pounds	DCP psi	
400	2,600	
500	3,230	high moisture
600	3,875	
700	4,520	
800	5,170	low moisture
900	5,800	

Using the above DCP hardness correlation, the DCP for Douglas fir ranges from 2,600 to 6,000 psi.

C. There is another indication of the DCP for Douglas fir. The highest (parallel to the grain) values of the compressive fiber stress at the proportional limit and the maximum crushing strength falls in the range of 3,000 to 7,000 psi (Table 12, Wood Handbook).

D. Summary

For estimating load deflection characteristics of plywood laminate composites as used in overpacks, the indication is that use of the dynamic crushing pressure (DCP) is as useful and probably about as accurate as the dynamic flow pressure (DFP) as applied to lead shielded casks. For limited data, the range of the DCP for plywood laminate construction is 3,000 to 6,000 psi. For calculation of impact loadings, the 6,000 psi value results in more conservative (higher) loadings.

2.10.7 Limiting Loadings

A. Source Capsule Loading

Encapsulated sources, are made to various component dimensions. Figure 4.1 in Chapter 4 shows the construction of a typical medical therapy source. The following sketch is a representation selected for calculation as developing a more severe inertial loading than most. The double wall has been combined into one to simplify calculations.

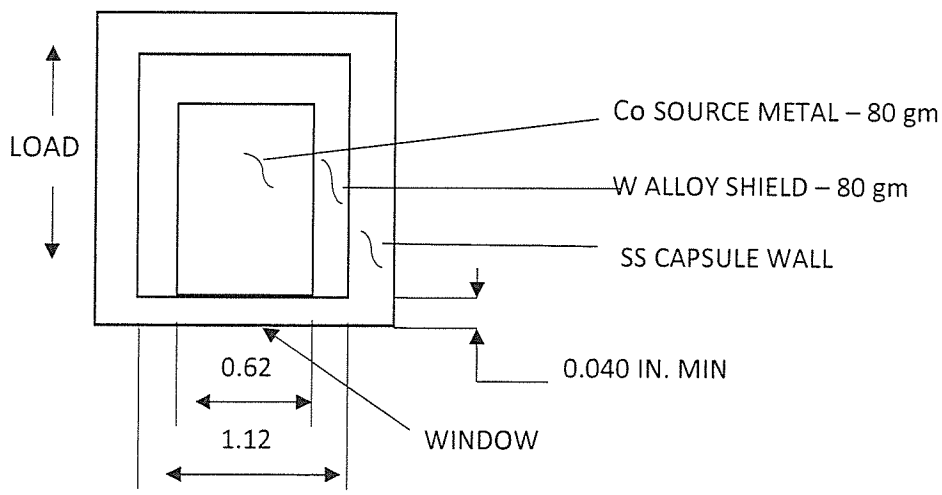

The most restrictive loading is axial, causing a shear load at the 1.12-inch diameter of the window. This shear area is π (1.12) 0.040 = 0.141 in.^{2} The source metal plus shield weight is 160 gm. X 2.2046 x 10^{-3} lbs./gm. = .353 pounds.

1. The loading to reach yield strength (Type 304L):

Shear Stress = 0.55 S_{ys} (at T= 550°F) = 0.55 (15,900) = 8,750 psi
Load = 8,750 (.141) = 1,234 pounds

Equivalent g loading = 1,234/.353 = 3,500 g

2. The Loading to reach the tensile strength (Type 304L):

Shear Stress = 0.55 S_{ts} (at T = 550°F) = 0.55 (57,400) = 31,600 psi
Load = 31,600 (.141) = 4,460 pounds
Equivalent g loading = 4,460/.353 = 12,600 g

B. End Cover Bolt Loading

1. Each End Cover closure employs eight bolts:
Size ½ - 13 UNC by 1.25 inches long, hex head
SAE Grade 8 steel bolt
Minimum root diameter = .400 inches, minimum root area = 0.126 in.^{2}
Total shear area = 8 (.126) = 1.008 in.^{2}

2. The limiting loading is shear along the face of the End Cover (normal to the horizontal axis of the Shell Assembly).

3. The loading to reach yield strength:

Shear Stress = 0.55 S_{ys} (at T = 300°F) = 0.55 (120,100) = 66,800 psi
Load = 66,800 (1.008) = 66,500
Equivalent g loading for End Cover weight of 74 pounds:
66,500/74 = 899 g

4. The loading to reach tensile strength:

Shear Stress = 0.55 S_{ts} (at T = 300°F) = 0.55 (150,000) = 82,500 psi
Load = 82,550 (1.008) = 83,160 pounds
Equivalent g loading for End Cover weight of 74 pounds:
83,160/74 = 1124 g

2.10.8 Puncture

Total energy to be dissipated in the one meter (40 inch) drop against the solid cylindrical bar is 6,000 x 40 = 240,000-pound inches.

A. Bottom Strike Against the Steel Shell

It is postulated that the cylindrical bar would: (1) stretch the metal of the Steel Shell bottom, acting much as the horn of a draw die; and, (2) crush the underlying plywood over an area corresponding to the bar tip cross section in

absorbing the energy of the strike. The energy absorbed in the first effect is the work of drawing the bottom sheet metal over the cylindrical bar to the depth of the penetration, δ, or:

$$E_{ws} = \text{metal working force} \times \delta = \sigma\, p\, \pi\, d\, t\, \delta$$

Where σ p is the stress in the Steel Shell metal under plastic flow conditions and taken as the average of the yield and tensile strength of the A-36 material, d is the diameter of the cylindrical bar, and t is the thickness of the Steel Shell metal (the double layer of 12 gauge plus 8 gauge sheet is taken as a single sheet .107 + .169 = .276 inches thick):

$$E_{ws} = 47{,}000\, \pi\, 6(.276)\, \delta = 245{,}000\, \delta \text{ pound inches}$$

The energy absorbed in the second effect, crushing the plywood, E_{ww}, can be estimated using the dynamic crushing pressure (Appendix 2.10.6) as:

$$E_{ww} = 6{,}000\, \pi\, 3^2\, \delta = 170{,}000\, \delta$$

The total energy is:

$$E_t = E_{ws} + E_{ww} = 415{,}000\, \delta$$

and

$$= 240{,}000/415{,}000 = 0.58 \text{ inches}$$

With an associated g loading of 40/.58 = 69 g

B. Bottom Strike Against the Skids

A direct hit on the skid would either crush or buckle the skid. Assuming a one-foot section of the skid would carry most of the reaction, calculations (similar to that in 2.10.2.A.1) indicate the buckling stress exceeds 100,000 psi. Since the compressive strength is approximately 60,000 psi for the A-36 material, the skid would crush. The energy required to crush a one-foot section of the skid of web thickness 0.210 inches is:

$$E_s = 60{,}000\, (12)(.210)\, \delta = 151{,}000\, \delta \text{ pound inches}$$

For total strike energy absorption by the skid, the deflection would be:

$$= 240{,}000/151{,}000 = 1.6 \text{ inches}$$

and the associated g loading 40/1.6 = 25 g

C. Top Strike Against the Steel Shell

The analysis is the same as the bottom strike against the Steel Shell, except for the decreased metal thickness (12 gauge) of the top:

$$E_{ws} = 47{,}000\ \pi\ 6(1.07)\ \delta = 95{,}000\ \delta$$

and

$$E_T = E_{ws} = E_{ww} = 265{,}000\ \delta - 240{,}000/265{,}000 = 0.9 \text{ inches}$$

with the associated g loading of 45 g.

D. Side Strike

If the impact is on one of the WPJ shock rings, results similar to the top strike should be expected. The deflection may be a little greater and the g loading reduced because the shock ring would crush further, being only 2¼ inches wide. If the strike occurs between the WPJ shock rings, the Steel Shell will not likely provide very much resistance, the resistance now being provided by the plywood. This might result in a deflection, δ, of about 1.4 inches with an associated loading of 30. As an estimate:

$$0.9 < \delta < 1.4$$
$$45 > g > 30$$

E. Oblique (Edge) Strike

The edge strike would be expected to result in deflections and loadings generally similar to the side strike. At the bottom edge, in the region of the additional support plate and skids, the effects would be closer to the bottom strike.

F. Steel Shell Damage

In all cases the overpack Steel Shell would experience permanent deformation. The extent to which the metal might tear or become perforated is difficult to estimate. The relationship given in the Cask Designers Guide (ORNL-NSIC-68, Page 17; see also Appendix 2.10.4) yields a thickness of .19 inches to prevent penetration of the present package. This would indicate that the bottom strike would not result in penetration (t =

.276 inches) whereas the other strikes might. Since the Steel Shell is neither lead containing nor essential for fire protection, any puncture resulting from the postulated drop will not likely reduce the effectiveness of the total package significantly.

2.10.9 References

A. Accident Resistant Shipping Containers

The report, "New Developments in Accident Resistant Containers for Radioactive Materials," by J.A. Sisler from Proceedings of the International Symposium for Packaging and Transportation of Radioactive Materials, January 12-15, 1965, SC-RR-65-98, Pages 141 – 185, has been reproduced in the following because of the importance of the work in assessing the performance of the Wooden Protective Jacket. Both drop and fire tests are summarized in the report.

2.10.10 Tiedown

Requirement: "Any lifting attachment that is a structural part of a package must be designed with a minimum safety factor of three against yielding when used to lift the package in the intended manner, and must be designed so that failure of any lifting device under excessive load would not impair the ability of the package to meet other requirements of this subpart." (10 CFR 71.45(a))

Load: Maximum weight of package (6,000 pounds) acting vertically upward, uniformly distributed between the brackets. Maximum static load per bracket: 1,500 pounds.

Component Adequacy: Reference Drawing 240116

1. Bracket eye – shear
   Shear area = 31/32 x 3/8 x 2 x 2 = 1.45 in.^{2}
   Load capability = (y.s.)(.55)(area)
   = 36,000 (.55) 1.45
   = 28,700 pounds
   Three times maximum load = 3 x 1,500 = 4,500 pounds
   No yielding
   Safety factor[(1)]– 6.4

2. Bracket – tension
   For a vertical load – each bracket
   Section area = 2 x 3 x 3 x 3/8 = 3.2 in.2
   Load capability = (y.s.)(area)
   = 36,000 (3.2) = 115,000 pounds
   Three times maximum load = 4,500 pounds – No yielding
   Safety factor(1) – 25

3. Support band and body flange – shear
   Upward force on bracket to reach shear limit in support ring and body flange cross section only
   Section area = 3.68 in.^{2}
   Load capability = 36,000 (.55) (3.68) = 72,800 pounds
   Three times maximum load = 4,500 pounds – No yielding
   Safety factor(1) – 16

4. Bracket attachment weld – shear
   Weld length = 8 inches (sides only considered)
   Minimum weld section = (1/4)(.707)(8) = 1.4 in.^{2}
   Weld efficiency = 75%
   Load capability = 2(36,000)(.55)(1.4)(.75) = 41,600 pounds
   Three times maximum load = 4,500 pounds – No yielding
   Safety factor(1) – 9.2

5. Steel Shell – tension
   Tension in Steel Shell
   Area = 48.5(.1072) = 16.3 in.^{2}
   Load capability = 36,000 (16.3) = 587,000 pounds
   Three times maximum load = 4 x 4,500 = 18,000 pounds
   No yielding
   Safety factor(1) – 33

2.10.11 Inner Cask Bolting Material

The bolts used to fasten the End Covers to the Shell Assembly are purchased to SAE Standard J429. The Standard is included as part A of this appendix. The mechanical requirements and identification markings are listed in Table 1 and the chemical composition requirements are listed in Table 2 of the standard. The application temperature range is not specifically identified except to indicate that stress relaxation characteristics should be taken into consideration for service temperatures above 500°F.

(1)Safety factor to 3x yield strength

The background for the Standard is provided in the first three sections of the chapter on Threaded Steel Fasteners in the Metals Handbook (Ninth Edition, pp. 273-75) included as part B of this appendix. The primary service temperature range is identified as -65°F to +400°F with guidelines for application up to +700°F. In the present application, the maximum temperature perceived under hypothetical accident conditions is within the primary service temperature range.

While the tensile strength and yield strength properties at elevated temperatures are not specifically called out in the standard, they can be derived with sufficient accuracy from room temperature properties in the standard and values provided for bolting material of generally the same composition in the ASME B & PV Code, Section III, Div. 1, Appendices. The tensile strength for ferritic steels changes very little, if at all, through temperatures up to 600°F and in most cases beyond (See ASME B & PV Code, Sec. III, Div 1 Appendices Table I-3.1). The decrease in yield strength from the room temperature value can be taken as proportional to the decrease in S_m for a bolting material such as ASTM A540 B22, which has about the same room temperature tensile and yield strength values and a composition falling within the specification of the Grade 8 standard (See ASME B & PV Code, Section III, Div. 1, Appendices Table I-1.3). The values for S_u, S_y and S_m listed in Table 2.3.3 were developed in this manner.