DISTRIBUTION AFTER ISSUANCE OF OPERATING LICENSE

NRC FORM 195 (2-76)

U.S. NUCLEAR REGULATORY COMMISSION

DOCKET NUMBER 50-335

FILE NUMBER

NRC DISTRIBUTION FOR PART 50 DOCKET MATERIAL

TO: Mr. Don K. Davis

FROM: Florida Power & Light Company
Miami, Florida
Robert E. Uhrig

DATE OF DOCUMENT 12/1/77

DATE RECEIVED 12/6/77

☑ LETTER ☑ ORIGINAL ☐ COPY ☐ NOTORIZED ☑ UNCLASSIFIED

PROP

INPUT FORM

NUMBER OF COPIES RECEIVED 3 SIGNED

DESCRIPTION (1-P)

ENCLOSURE (13-P)

Consists of requested additional info. on the proposed inservice inspection program for Unit No. 1.....

PLANT NAME: St. Lucie Unit No. 1

RJL 12/6/77

3 ENCL / REPRO BALANCE

FOR ACTION/INFORMATION

SAFETY			
BRANCH CHIEF: (7)	DAVIS		

INTERNAL DISTRIBUTION

REG FILE					
NRC PDR					
I & E (2)					
OELD					
HANAUER					
CHECK					
EISENHUT					
SHAO					
BAER					
BUTLER					
GRIMES					
G. COLLINS					
G. MCGOUGH					

EXTERNAL DISTRIBUTION

LPDR: PT PIERCE FLA			
TIC			
NSIC			
ACRS 16 CYS SENT CATEGORY B			

CONTROL NUMBER

773400075

MA-4

60

P. O. BOX 013100, MIAMI, FL 33101

FPL
FLORIDA POWER & LIGHT COMPANY

December 1, 1977
L-77-360

Office of Nuclear Reactor Regulation
Attn: Mr. Don K. Davis, Acting Chief
Operating Reactors Branch #2
Division of Operating Reactors
U. S. Nuclear Regulatory Commission
Washington, D.C. 20555

Dear Mr. Davis:

Re: St. Lucie Unit 1
Docket No. 50-335
Inservice Inspection Program

Your letter of September 12, 1977 requested additional information on our proposed inservice inspection program for St. Lucie Unit 1. The information you requested is attached.

This letter responds to the commitment contained in our letter of October 27, 1977 (L-77-333).

Very truly yours,

J. A. DeMastry
for
Robert E. Uhrig
Vice President

REU/MAS:ltm
Attachment

cc: Mr. James P. O'Reilly, Region II
Robert Lowenstein, Esq.
Mr. Edward Reeves

Question 1: Provide a detailed explanation of the inaccessibility of the reactor pressure vessel (RPV) closure head dome welds (item no. B1.2) which prevent the required volumetric examination. Provide the radiation level expected at this location. Also, discuss any other forms of inservice inspection you have considered and the reasons they were considered impractical.

Answer: The RPV closure head dome weld and a portion of each of the meridional welds are not accessible from the outside surface (OD) due to the cooling plenum and the cluster of control rod drive mechanisms being in place. This can be visualized when reference is made to Volume I, Page 520, Figure 16 of the St. Lucie Plant Unit 1 Preservice Examination (PSI) Report. In addition, the configuration of the area is such that the control rod drive and instrumentation penetrations obstruct examinations from both the inside surface (ID) and the OD. (See Volume II, Appendix A, Figure A-6 of the PSI Report).

Experience from similar reactors indicates that the radiation levels to be expected under the RPV closure head are of the magnitude of 5 R/hr and over. On the OD these fields are reduced drastically and experience shows that a range of 20 to 50 mR/hr is the amount of radiation to be expected.

Volumetric examination (ID and/or OD) by either ultrasonic (UT) or radiography (RT) techniques is not only impractical but also inconclusive. Even if accessibility and radiation levels were permitting, the amount of the RPV closure head dome weld that can be examined is minimum and cannot meet Section XI of the ASME Code requirements due to the configuration of the area.

Surface examination of the RPV closure head dome weld from the OD cannot be performed by either magnetic particle (MT) or liquid penetrant (PT) techniques for reasons of inaccessibility and impracticability of removing the protective paint coating of the closure head (if accessibility was such that the examinations could be performed). From the ID, MT cannot be performed due to the stainless steel cladding and PT is limited to a very small portion of the weld due to the configuration of the area. This limited examination by PT techniques from the ID of the closure head is considered impractical because it cannot be performed without undue radiation exposure to the examination personnel.

Section XI of the ASME Code deleted visual testing (VT) from item no. B1.2 (and from several other item

numbers pertaining to welds) as nonessential testing. However, VT is considered impracticable from the OD due to the accessibility problems stated in previous paragraphs. From the ID, a remote VT may be performed, if it is desirable to describe the general condition of the area. In any case, VT is performed on the RPV closure head during leakage and hydrostatic tests, and conditions such as boron concentrations from leaking borated water can be detected.

Although a portion of each meridional weld is inaccessible due to the configuration of the area, sufficient amount of weld is accessible from the OD of the RPV closure head to perform a Section XI ASME Code acceptable and technically meaningful UT examination on each weld.

Question 2: Clarify your statement regarding the amount of inspection you intend to perform on the vessel-to-flange welds (item no. B1.3), during the first 1/3 of this inspection interval. Article IWB-2400 of Section XI only allows you to take credit for a maximum of 33-1/3% during the first 1/3 of an inspection interval.

Answer: The weld will be examined by manual UT techniques from the seal surface once every 3-1/3-year period per the Section XI requirements (33-1/3% of the weld each period). In the last period of the interval (or when the core barrel is removed) the weld will be examined by mechanized UT techniques from the vessel wall. This later examination will cover 100% of the weld as a one time examination.

Question 3: Do you intend to remove the RPV closure studs for the surface examination during each designated inspection period per Regulatory Guide 1.65?

Answer: ASME Section XI incorporated the intent of Regulatory Guide 1.65 in the 1974 Edition of the Code. Yes, the studs will be removed and a surface examination will be performed during each designated inspection period.

Question 4: Provide justification for not inspecting two patch areas of the RPV cladding (item no. B1.14) during the first 1/3 of this inspection interval.

Answer: It is impractical to remove the core barrel every 3-1/3-year period for the examination of 2 cladding patches, therefore, all 6 patches are scheduled to be examined in the third period of the interval when the core barrel is scheduled to be removed. However,

if the core barrel is removed at any time prior to the third period of the interval, the opportunity will be utilized to examine patches of the cladding.

Question 5. Do you intend to include item number B1.16, "Interior Attachments and Core Support Structures", in your ten year program?

Answer: Item B1.16 pertains to boiling water reactors (BWR) as per Section XI, Winter 1974 Addenda, Catagory B-N-2. St. Lucie Plant Unit 1 is a pressurized water reactor (PWR), therefore, item number B1.16 is not applicable and will not be included in the ten year program.

Question 6. Provide justification for the exclusion of each item number from the valve pressure boundary category of table IWB-2600 of Section XI not included in your current program.

Answer: Item numbers (i.e., B6.1, B6.2, B6.4, B6.5, B6.6 and B6.8), which pertain to components and parts of the valve pressure boundary system to be examined in Table IWB-2600, were excluded from the program. The reason for the exclusions is that the valves (components) and parts in the program do not fall within the requirements of the applicable corresponding item numbers pertaining to the Examination Category of Table IWB-2500.

Question 7: Explain in detail why the configuration of the staywell dome-to-staywell cylinder welds in both steam generators (1A and 1B) prohibit a meaningful examination for both ultrasonic and radiographic techniques. Discuss why any alternate form of examination, such as surface examination, cannot be used in lieu of the required volumetric examination.

Answer: The staywell dome-to-staywell cylinder weld in both steam generators, due to its geometry and accessibility, is not conducive to any meaningful examination. Figure 1 shows the configuration of the staywell, the staywell dome-to-staywell cylinder weld, the permanent track installation, and specific dimensions as measured in the field during the PSI examinations. Figure 2 shows the transducer module configuration and dimensions.

As it can be seen in Figure 1, the clearance between the ultimate stop of the device is located 2-13/16 inches above the weld. The transducer module is 1-9/16 inches deep, therefore, ideally there is a clearance of 1-1/4 inch of area that can be examined. When we apply a safety factor of 1/2 inch, in order for the module to operate freely, the area scan is reduced to only 3/4 inch. But the incident point of the transducer beam is located 1-1/16 inch from the end of the shoe, so the beam in reality is not scanning the weld but only the tube sheet. This is a meaningless examination.

In the transverse configuration of the module there is the 3/4 inch area of base metal that ideally can be examined. But the root of the weld is not a smooth area and, therefore, the transducer module cannot ride over the weld smoothly. Hence, the examination is obstructed by this factor, and also by the curvature of the staywell cylinder dome.

An attempt to cover the weld from its bottom side will not be successful due to the tube sheet thickness. The beam cannot be bounced on a back wall to cover the root of the weld and again due to the area geometry only partial scanning of the weld crown and approximately the upper third of the weld can be performed. Of course, transverse examination is useless due to the tube sheet thickness and tube configurations.

Therefore, the UT examination of this weld cannot meet Code requirements and the limited examination that can be performed is not enough to produce any meaningful or conclusive results.

Radiography, surface, or visual examinations cannot be performed due to inaccessibility of the weld because of the stationary track installed for the UT examinations of the rest of the staywell cylinder welds.

Question 8: The inspection schedule for Class 2 components (IWC-2400) requires that you perform at least part of the required examination by the expiration of each 1/3 of an inspection interval. Provide justification for not including part of the required inspection, for the steam generators and the shutdown heat exchangers, in your Class 2 ISI program for the first 1/3 of an interval.

Answer: Examinations have been scheduled during the 40-month period for the steam generators and the shutdown heat exchangers. For the steam generators, one weld was chosen to be examined ultrasonically during this period. For the shutdown heat exchangers, 33-1/3% of the bolting was chosen to be examined visually during this period. These examinations are in accordance with the requirements of Section XI, which require multiple streaming and examinations spread over the 40-year life of the plant.

Question 9: Provide a detailed description for each of the Class 2 piping welds where you indicate that the required inspection cannot be performed because of inaccessibility, explaining in detail why these welds are not accessible. Discuss any alternate inspection you have considered in lieu of the required inspection.

Answer: All welds that were classified as inaccessible were listed as such due to being embeded in concrete or enclosed in metal sleeves. See isometric drawings (ISO) for details. No examination, of any kind, can be performed in these welds.

Question 10: Provide a description of the ultrasonic testing procedure that you intend to use for the Class 1 and 2 components in your program.

Answer: SWRI, which is an agency that provides the ISI services for St. Lucie Plant Unit 1, has a multitude of ultrasonic procedures to be used for the Class 1 and 2 components in the plant. These procedures are highly specialized for each type of component, constantly upgraded to conform to Code requirements, and incorporate recently developed techniques. During the planning stages of each ISI, the procedures will be tailored for the specific anticipated examinations and will be reviewed for approval by FPL prior to any site examinations. These procedures are subject to review by the NRC I and E Compliance Inspector and the Code Authorized Inspector.

(7) Vessel Cladding. Six 6 X 6-in. patches of cladding on the Reactor Pressure Vessel were examined visually in accordance with Procedure SwRI-NDT-900-1, Revision 6. No recordable indications were observed.

b. Closure Head

The RPV Closure Head was examined while on its stand (see Figure 16) with the cooling shroud in place and the Control Rod Drive mechanisms in place. The examinations were performed manually, and they were limited due to the inaccessibility of certain areas of interest.

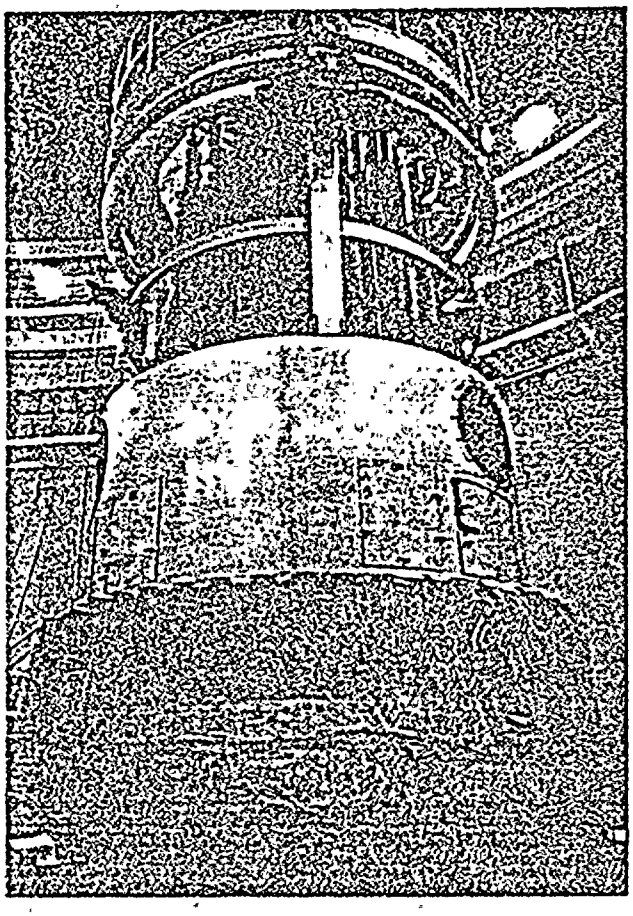

FIGURE 16. THE REACTOR PRESSURE VESSEL CLOSURE HEAD ON ITS STAND AT ST. LUCIE PLANT UNIT 1

(1) Circumferential Welds (See Appendix A, Figures A-5 and A-6). The RPV-CH-209-02 Head-to-Flange Weld was examined in accordance with Procedure SwRI-NDT-600-15, Revision 5. The examinations used 1-in. diameter, 2.25 MHz, 0-deg longitudinal wave and 1/2 X 1-in., 2.25 MHz, 45- and 60-deg shear wave search units. (For scanning pattern, see Figure 17.) No recordable indications were observed.

(2) Meridional Welds (See Appendix A, Figure A-6). The RPV Closure Head Meridional Welds were examined using manual ultrasonic techniques in accordance with Procedure SwRI-NDT-600-15, Revision 5. The examinations were limited to a weld length of 15-1/2 in. per

REACTOR PRESSURE VESSEL CLOSURE HEAD, CLOSURE HEAD STUD, CLOSURE HEAD STUD NUT, CLOSURE HEAD STUD NUT WASHER OUTLINE AND WELD IDENTIFICATION

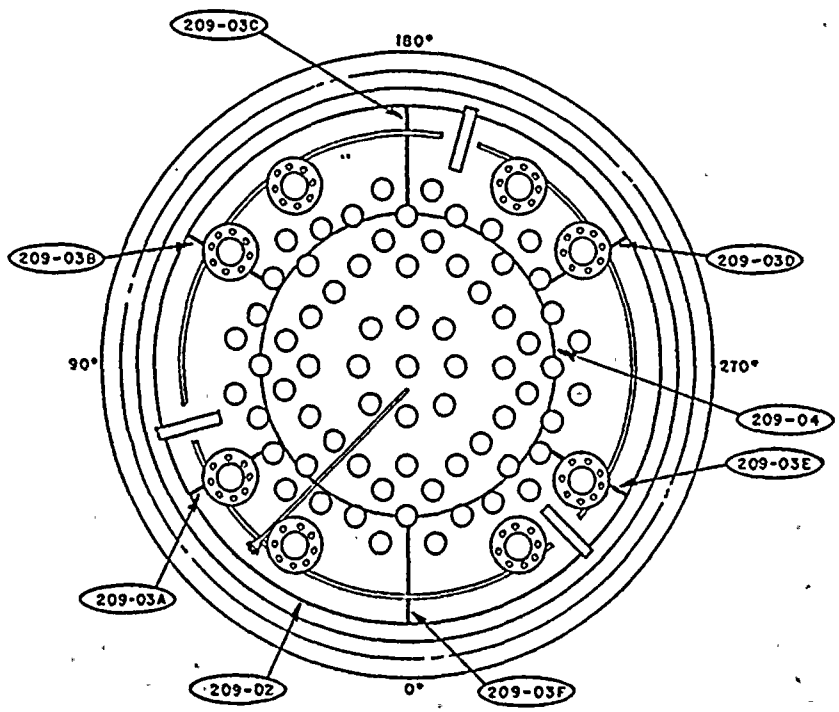

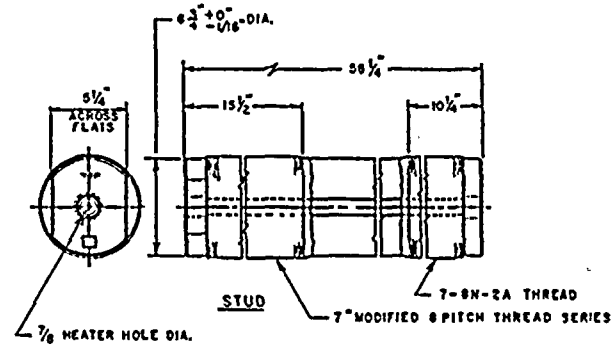

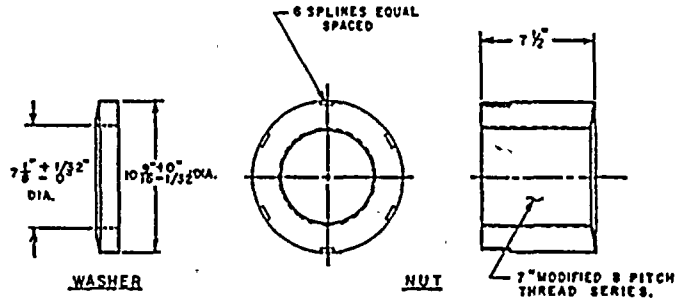

STANDARDS USED FOR MANUAL UT EXAMINATIONS.

ALL WELDS ON RPV-C.H. —— 7-CSCL-39-SLC

STUD —— 7-1.125-8-CS-52-SLC

NUT —— { 7-1.125-8-CS-52-SLC
10.562-7-8-CS-51-SLC

FIGURE A-6

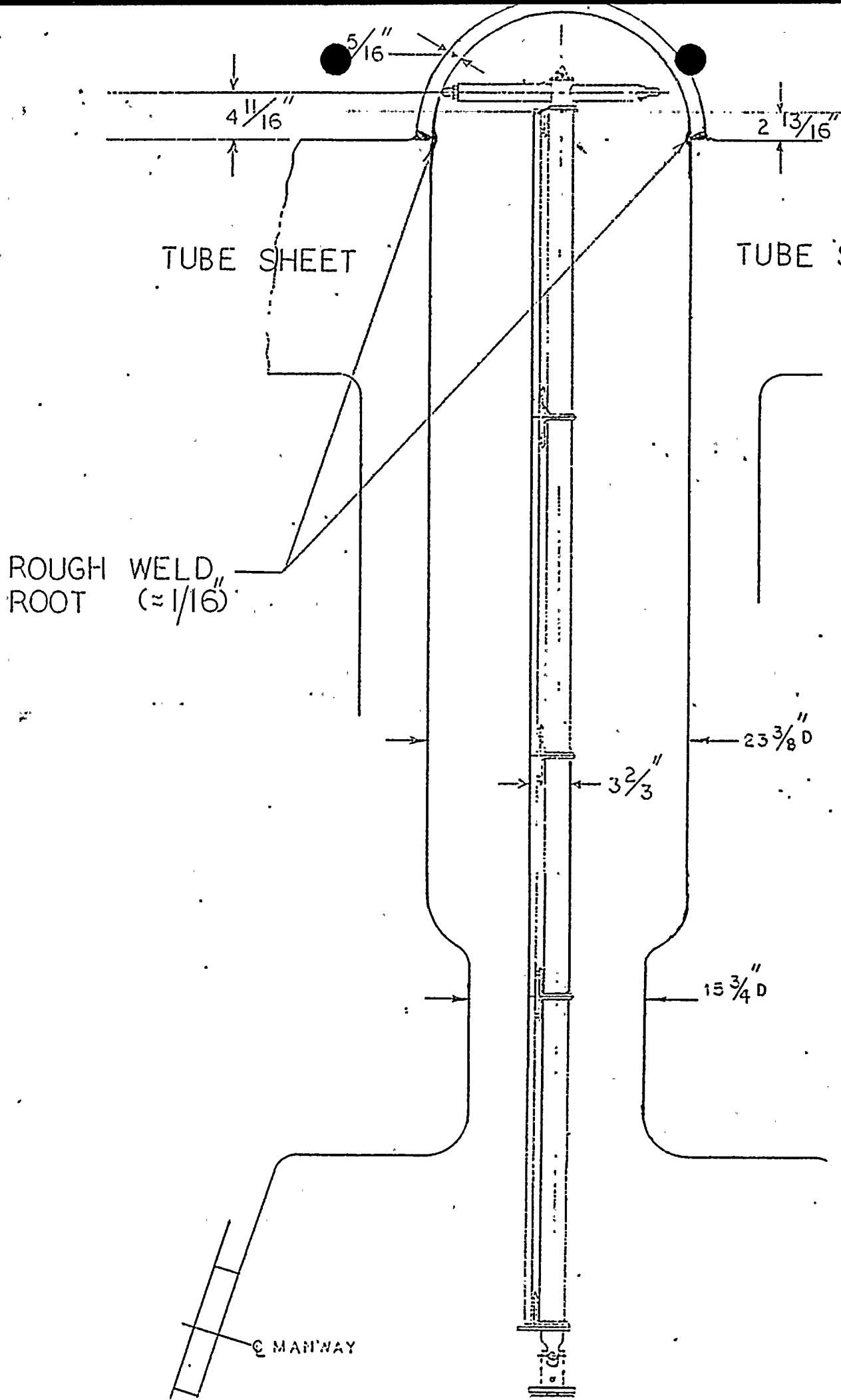
5/16"
4 11/16"
2 13/16"
TUBE SHEET
TUBE SHEET
ROUGH WELD ROOT (≈1/16")
23 3/8" D
3 2/3"
15 3/4" D
℄ MAN'WAY

FIGURE 1

FIGURE 2

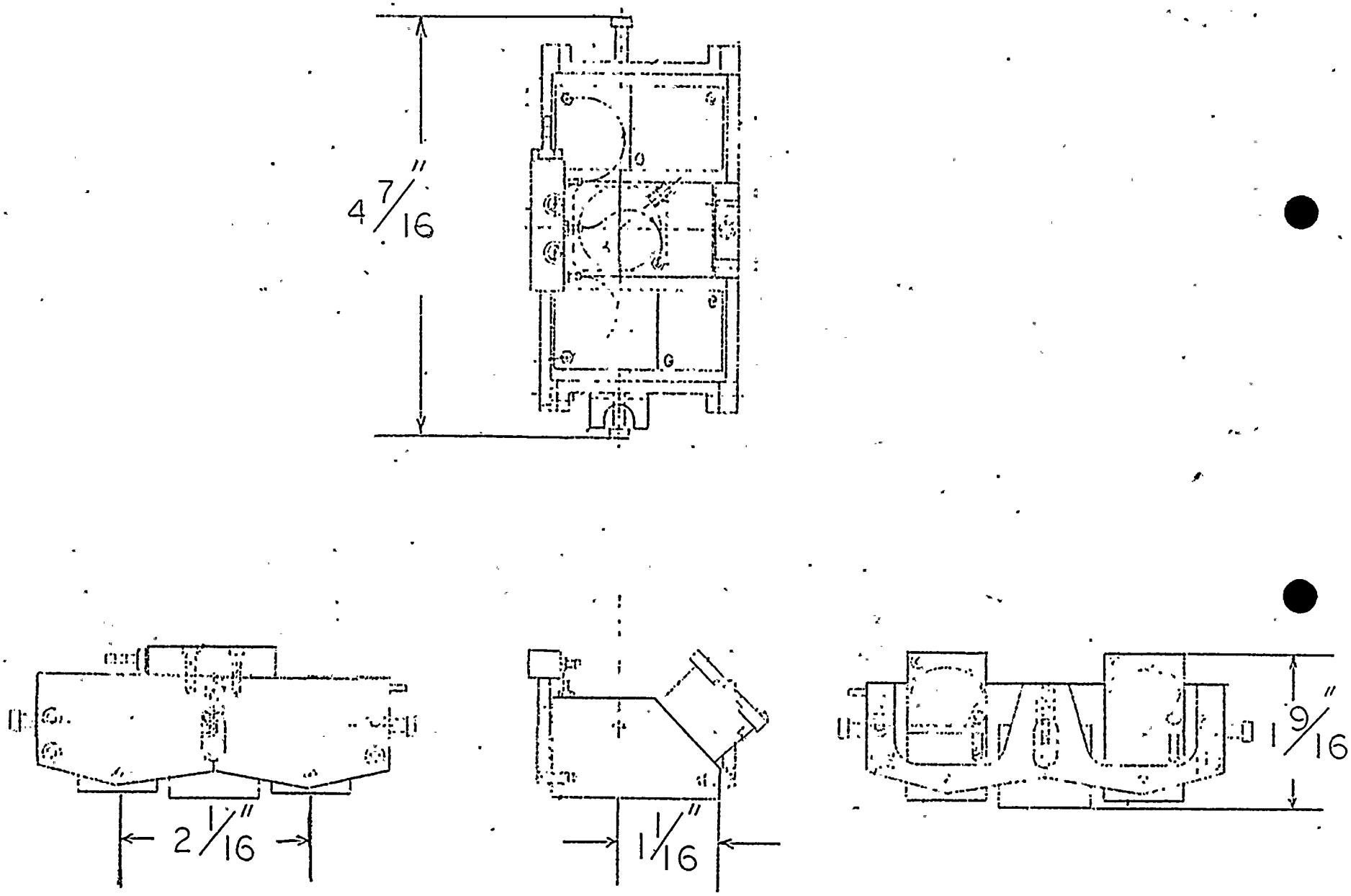

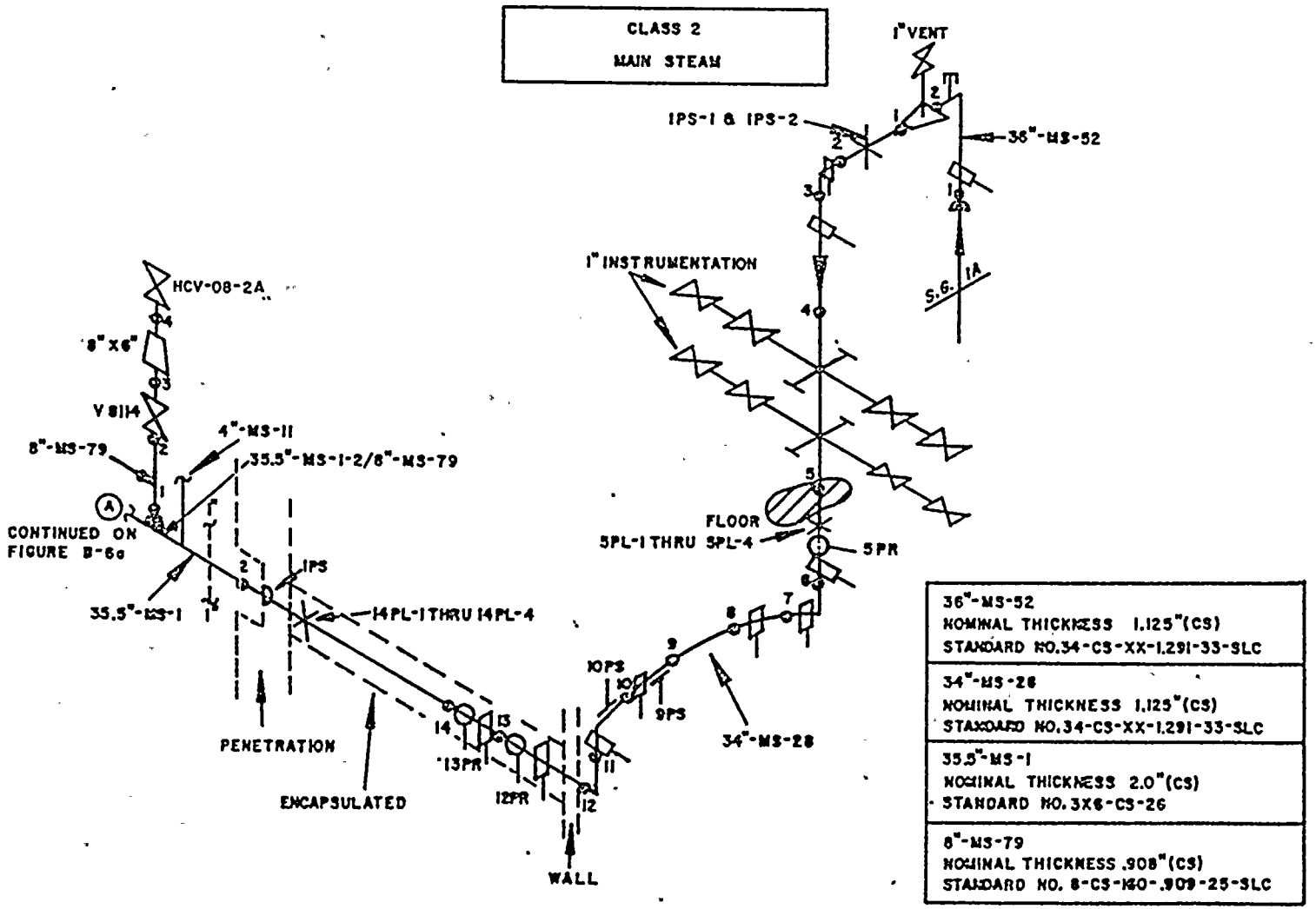
CLASS 2
MAIN STEAM
1" VENT
IPS-1 & IPS-2
36"-MS-52
1" INSTRUMENTATION
S.G. 1A
HCV-08-2A
8"X6"
V8114
8"-MS-79
4"-MS-11
35.5"-MS-1-2/8"-MS-79
CONTINUED ON FIGURE B-6a
35.5"-MS-1
IPS
14PL-1 THRU 14PL-4
FLOOR
5PL-1 THRU 5PL-4
5PR
10PS
9PS
34"-MS-28
PENETRATION
ENCAPSULATED
13PR
12PR
WALL
36"-MS-52
NOMINAL THICKNESS 1.125"(CS)
STANDARD NO.34-CS-XX-1.291-33-SLC
34"-MS-28
NOMINAL THICKNESS 1.125"(CS)
STANDARD NO.34-CS-XX-1.291-33-SLC
35.5"-MS-1
NOMINAL THICKNESS 2.0"(CS)
STANDARD NO.3X6-CS-26
8"-MS-79
NOMINAL THICKNESS .908"(CS)
STANDARD NO. 8-CS-160-.909-25-SLC

FIGURE B-6

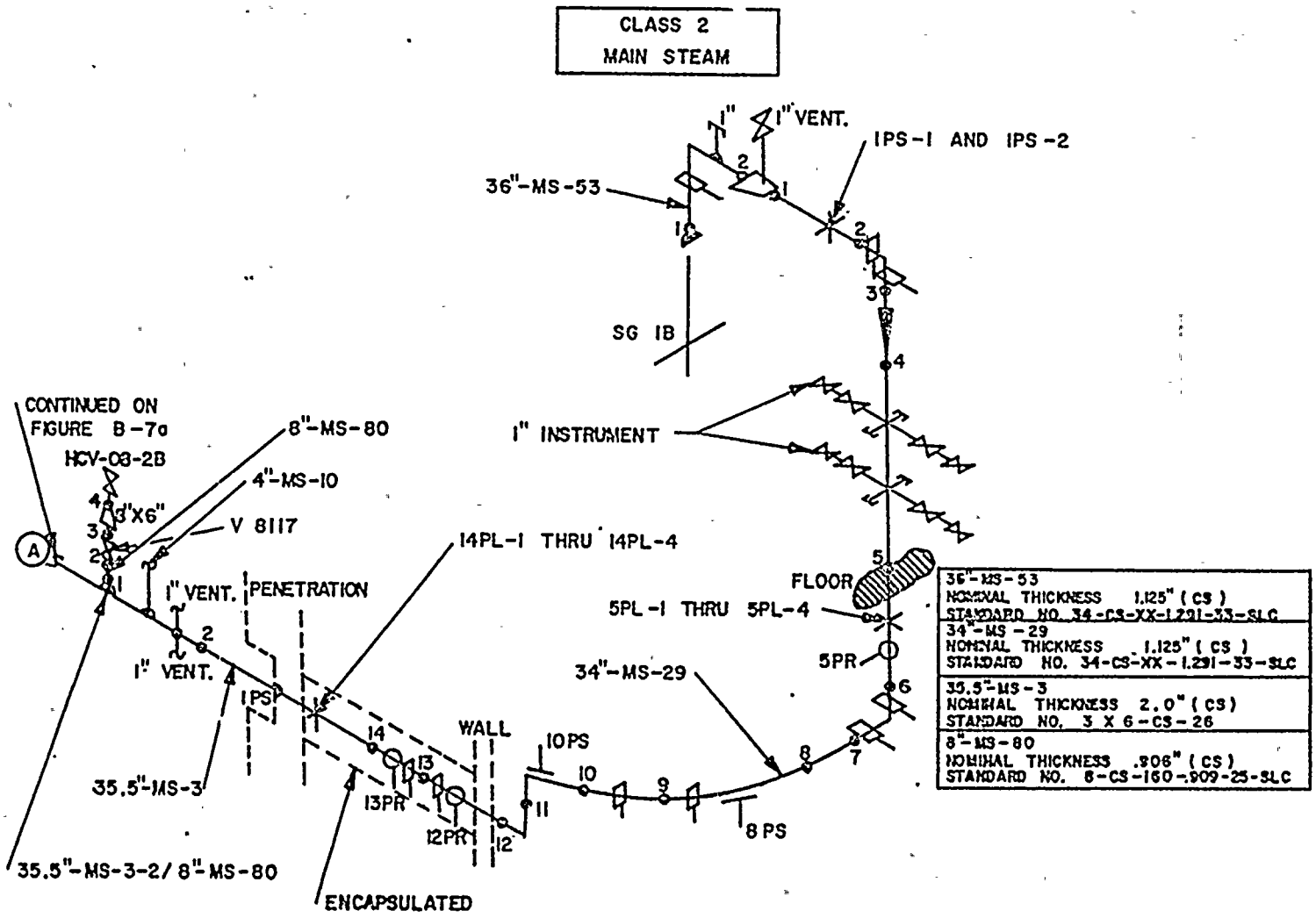
CLASS 2
MAIN STEAM
1"
1" VENT.
IPS-1 AND IPS-2
36"-MS-53
SG 1B
1" INSTRUMENT
CONTINUED ON
FIGURE B-7a
HCV-03-2B
8"-MS-80
4"-MS-10
3"X6"
V 8117
A
1" VENT.
PENETRATION
14PL-1 THRU 14PL-4
1" VENT.
1PS
35.5"-MS-3
35.5"-MS-3-2/ 8"-MS-80
ENCAPSULATED
13PR
12PR
WALL
10PS
8 PS
34"-MS-29
5PL-1 THRU 5PL-4
FLOOR
5PR
36"-MS-53
NOMINAL THICKNESS 1.125" (CS)
STANDARD NO. 34-CS-XX-1.291-33-SLC
34"-MS-29
NOMINAL THICKNESS 1.125" (CS)
STANDARD NO. 34-CS-XX-1.291-33-SLC
35.5"-MS-3
NOMINAL THICKNESS 2.0" (CS)
STANDARD NO. 3 X 6-CS-26
8"-MS-80
NOMINAL THICKNESS .906" (CS)
STANDARD NO. 8-CS-160-.909-25-SLC

FIGURE B-7

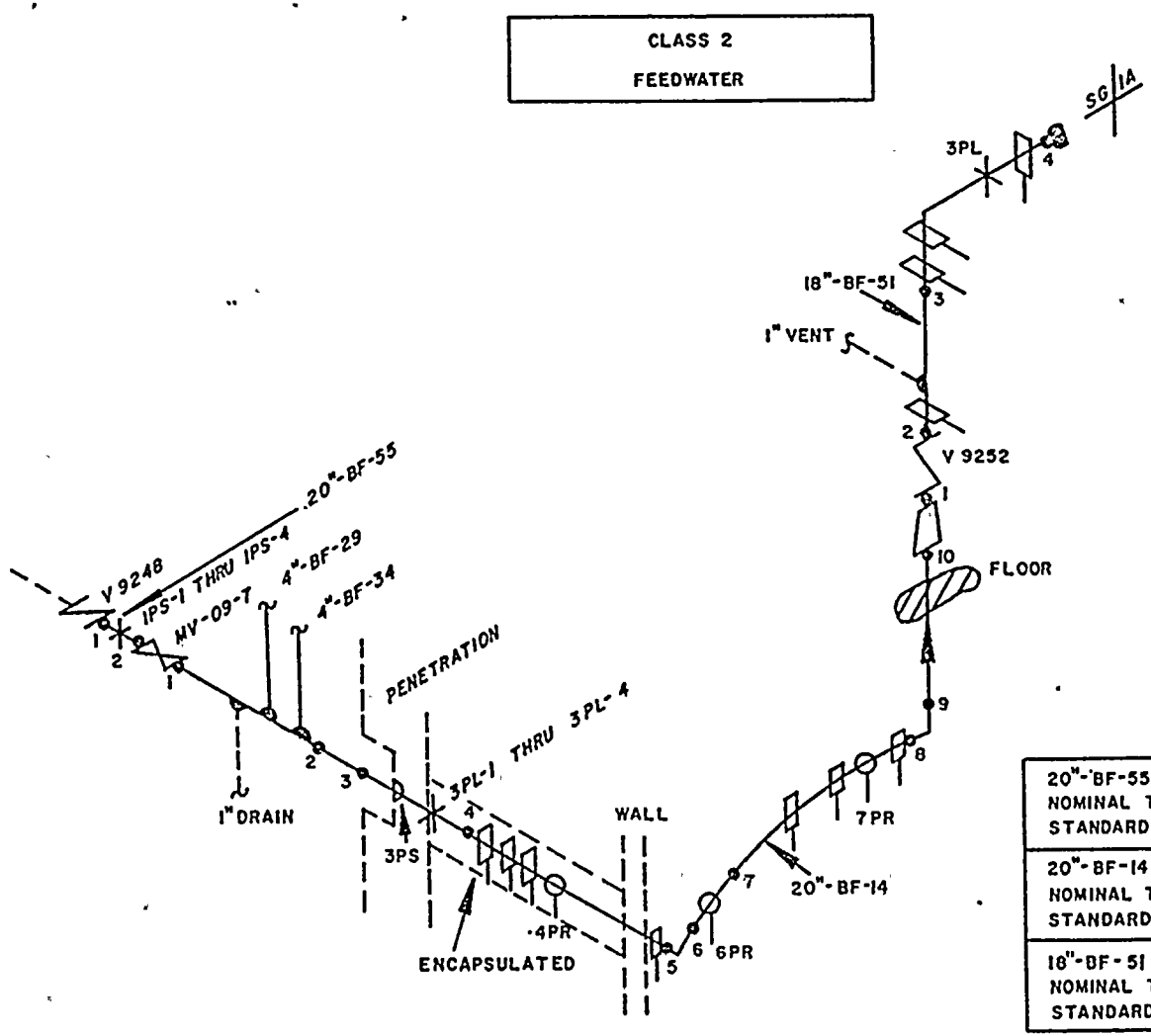

20"-BF-55 NOMINAL THICKNESS 1.500"(CS) STANDARD NO. PL-CS-1.515-46
20"-BF-14 NOMINAL THICKNESS 1.031" (CS) STANDARD NO. 20-CS-80-1.044-32-SLC
18"-BF-51 NOMINAL THICKNESS .938" (CS) STANDARD NO. 18-CS-80-.927-31-SLC

FIGURE B-8

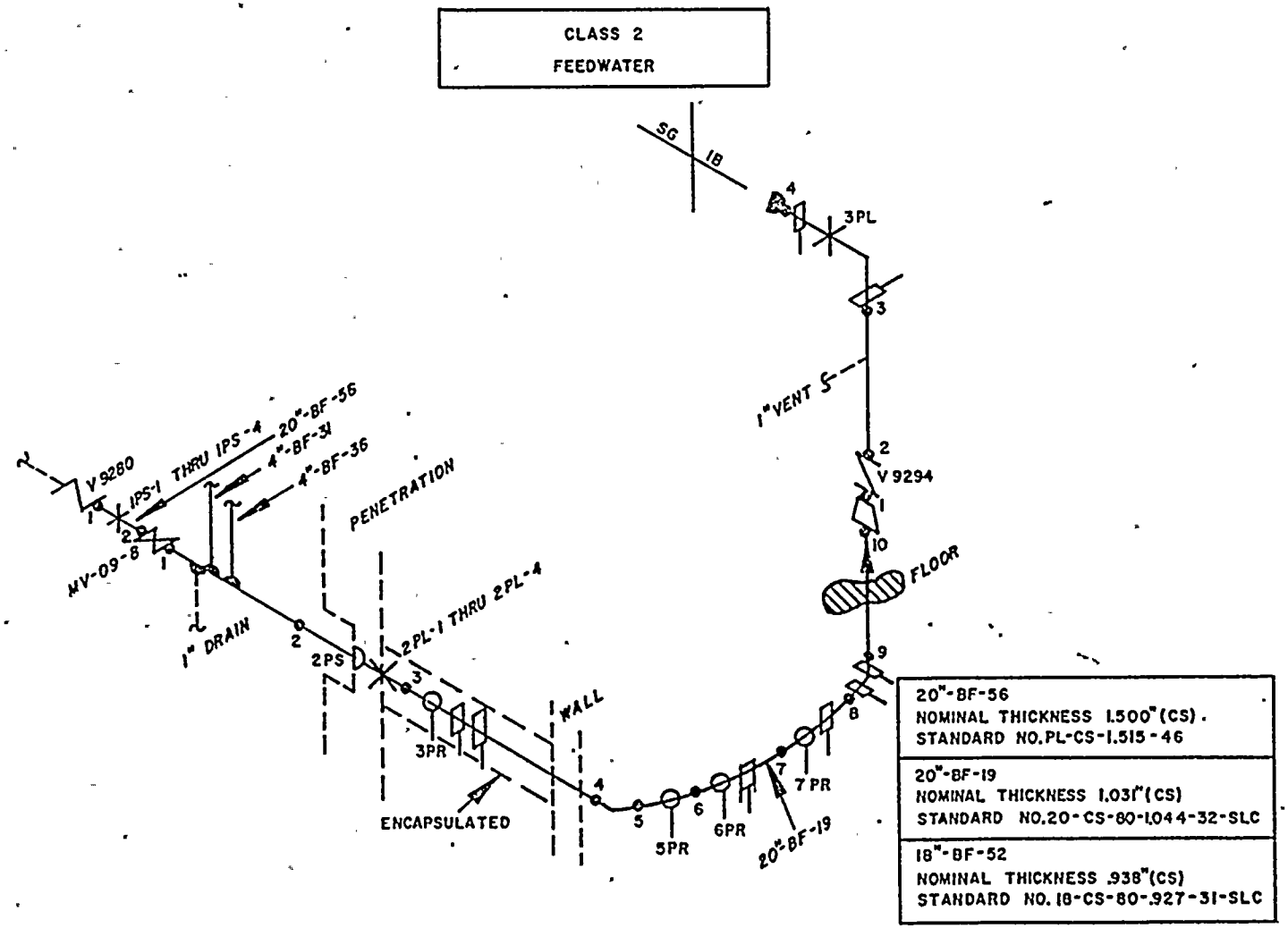
CLASS 2
FEEDWATER
SG
18
4
3PL
3
1" VENT
2
V 9294
1
10
FLOOR
9
8
7
7 PR
20"-BF-19
6PR
6
5
5PR
4
WALL
3PR
3
2PL-1 THRU 2PL-4
2PS
2
1" DRAIN
MV-09-8
1
2
V 9280
1
IPS-1 THRU IPS-4
20"-BF-56
4"-BF-31
4"-BF-36
PENETRATION
ENCAPSULATED
20"-BF-56
NOMINAL THICKNESS 1.500"(CS).
STANDARD NO.PL-CS-1.515-46
20"-BF-19
NOMINAL THICKNESS 1.031"(CS)
STANDARD NO.20-CS-80-1.044-32-SLC
18"-BF-52
NOMINAL THICKNESS .938"(CS)
STANDARD NO.18-CS-80-.927-31-SLC

FIGURE B-9