Entergy

Entergy Operations, Inc.
17265 River Road
Killona, LA 70057-3093
Tel 504 739 6685
Fax 504 739 6698
jjarrel@entergy.com

John P. Jarrell III
Manager – Regulatory Assurance
Waterford 3

10CFR50.59 (d)(2)
10CFR72.48 (d)(2)

W3F1-2018-0015

April 30, 2018

U.S. Nuclear Regulatory Commission
Attn: Document Control Desk
Washington, DC 20555-0001

Subject: Report of Facility Changes, Tests and Experiments and Commitment Changes for two year period ending April 30, 2018
Waterford Steam Electric Station, Unit 3
Docket No. 50-382
License No. NPF-38

Dear Sir or Madam:

Enclosed is the summary report of facility changes, tests and experiments for Waterford 3, which is submitted pursuant to 10CFR50.59 (d)(2) and 10CFR72.48 (d)(2). This report covers the period from April 28, 2016 through April 28, 2018 and includes copies of the 10CFR50.59 Evaluations from this period. However, this Submittal does not include a Summary report for 10CFR72.48 since there were none performed during this period. The summary report of Commitment Changes for the same time period in line with guidance in SECY-00-0045 and NEI 99-04 are included herein.

If you have any questions regarding this report, please contact John Jarrell, Regulatory Assurance Manager at (504) 739-6685.

There are no new commitments contained in this submittal.

Sincerely,

JPJ/LLB

Attachment: Summary of Evaluations
Enclosure: Waterford 3 10CFR 50.59 Evaluations
Commitment Change Summary Report

IE47
NRR

cc:	Mr. Kriss Kennedy, Regional Administrator U.S. Nuclear Regulatory Commission Region IV 1600 E. Lamar Blvd. Arlington, TX 76011-4511	RidsRgn4MailCenter@nrc.gov
	NRC Senior Resident Inspector Waterford Steam Electric Station Unit 3 P.O. Box 822 Killona, LA 70057-0751	Frances.Ramirez@nrc.gov Chris.Speer@nrc.gov
	U.S. NRC Project Manager for Waterford 3	April.Pulvirenti@nrc.gov

Attachment

W3F1-2018-0015

Summary of Evaluations

10CFR50.59 Evaluation Number	Initiating Document	Summary
16-02	EC-0000065610-000	One Time Extension to TRM 3.3.4 Turbine Valve Testing. CR-WF3-2016-4009 identified that the Technical Requirements Manual (TRM) 4.3.4.2.a turbine valve testing, scheduled for 6/17/2016, was not performed due to a MISO conservative operations notice issued for Waterford 3 after the Grand Gulf trip during their turbine valve testing.
17-01	EC-0000068581-000	Evaluation of Reactor Vessel Surveillance and Current License Basis. CR-WF3-2016-6358 identified that the WF3 surveillance capsule W-83 neutron fluence was analyzed using the Westinghouse RAPTOR-M3G code, which is not a fluence analysis method in the current Waterford 3 licensing basis.
17-02	EC-0000068581-000	Evaluation of Reactor Vessel Surveillance and Current License Basis. Incorporates the ASME Section III, Subarticle NB-2331 fracture toughness methods into the design and licensing basis.
17-03	EC-0000062939-000	Appendix B to UFSAR 3.8 and issue Calculation ECC17-001. Requests a change to be able to use ACI 349-01, Appendix B, "Anchoring to Concrete", for post-installed anchors
17-04	EC-0000064801-000	Emergency Feed Water Logic Modification. The EFW control valve logic will be modified such that the Safety Injection Actuation Signal (SIAS) signal will be permanently actuated in the EFW system controls which causes the EFW control system to automatically perform the steam generator level control mode of operation. The flow control mode will no longer be utilized.
17-05	EC-0000065206-000	W3 Cycle 22 Reload. Evaluation of the design and performance of the Waterford 3 Cycle 22 reload core and the output documents from the reload process.

17-08	CR-WF3-2017-05763	Compensatory Measure: Addition to OP-500-003 for Manual Action to Restart Essential Chiller for Design Basis Event. Operator action is required and being credited to restart Essential Chiller B (or AB if aligned) in the event it trips due to a perturbation on its electrical bus.

10CFR72.48 Evaluation Number	Initiating Document	Summary
None		

Enclosure to W3F1-2018-0015

Waterford 3 10CFR50.59 Evaluations and Commitment Change Summary Report

(98 pages)

I. OVERVIEW / SIGNATURES[1]

Facility: Waterford 3 Steam Electric Station **Evaluation # / Rev. #:** 2016-02 / 0

Proposed Change / Document: EC65610 One Time Extension to TRM 3.3.4 Turbine Valve Testing

Description of Change:
CR-WF3-2016-4009 identified that the Technical Requirements Manual (TRM) 4.3.4.2.a turbine valve testing, scheduled for 6/17/2016, was not performed due to a MISO conservative operations notice issued for Waterford 3 after the Grand Gulf trip during their turbine valve testing. The late date for the TRM 4.3.4.2.a turbine valve testing is 7/18/16. It was desired to move the late date until after 9/15/16 to support summer reliability.

This change evaluated a one time extension to TRM 4.3.4.2.a turbine valve testing which states:

> At least once every 184 days (under direct observation) each of the following valves is cycled through at least one complete cycle from the running position.
> 1. Four high pressure throttle valves.
> 2. Four high pressure governor valves.
> 3. Six low pressure reheat stop valves.
> 4. Six low pressure reheat intercept valves.

This change validated that the turbine missile ejection probability remains within the regulatory requirements and is consistent with the analysis described in UFSAR Sections 3.5.1.3 and 10.2.3. This change will extend the TRM 4.3.4.2.a turbine valve testing late date from 7/18/16 to 9/30/16.

LBDCR 16-034 implements the one time extension to TRM 4.3.4.2.a turbine valve testing moving the late date from 7/18/16 to 9/30/16.
LBDCR 16-035 removes the one time extension to TRM 4.3.4.2.a turbine valve testing after 9/30/16 to restore the TRM information.

Summary of Evaluation:
This change addresses extending the Technical Requirements Manual (TRM) 4.3.4.2.a turbine valve testing late date from 7/18/16 to 9/30/16. This change was performed by using the UFSAR Section 3.5.1.3.7 probability calculation methodology and updating for a TRM 4.3.4.2.a turbine valve testing time of 10 months and plant specific turbine inspection data. The use of the plant specific turbine inspection data reduced the probability to below the UFSAR values.

There are two (2) NRC requirements that Waterford 3 must meet for this change to be acceptable. The first comes from Regulatory Guide 1.115 [References 5]. Regulatory Guide 1.115 page 4 states that the probability of failure of an essential Structure, System, or Component (SSC) because of turbine missiles is calculated from equation $P_{total} = P_1 \times P_2 \times P_3$. Where P_1 is the probability of turbine missile generation resulting in the ejection of turbine disk (or internal structure) fragments through the turbine casing. P_2 is the probability of ejected missiles perforating intervening barriers and striking essential SSCs. P_3 is the probability of essential SSCs that are struck failing to perform their safety functions. P_{total} is limited to less than $1x10^{-7}$ per year, which the NRC staff considers to be an acceptable risk rate for the loss of an essential SSC from a single event. Thus, the first requirement is P_{total} is less than $1x10^{-7}$ per year.

[1] Signatures may be obtained via electronic processes (e.g., PCRS, ER processes), manual methods (e.g., ink signature), e-mail, or telecommunication. If using an e-mail or telecommunication, attach it to this form.

Summary of Results Table

Description	P_{total} – UFSAR Section 3.5.1.3.7	P_{total} – EC65610 Using plant specific turbine inspection data	P_{total} - Acceptance Limit
Current TRM 4.3.4.2.a turbine valve testing time	7.48×10^{-8} per year	3.08×10^{-8} per year	$< 1 \times 10^{-7}$ per year
EC65610 TRM 4.3.4.2.a turbine valve testing extension to 10 months	NA	3.30×10^{-8} per year	$< 1 \times 10^{-7}$ per year

UFSAR Section 3.5.1.3.7 provides the P_{total} results for the current TRM 3/4.3.4 surveillance frequencies. The UFSAR Section 3.5.1.3.7 total probability of strike damage, P_{total}, is 7.48×10^{-8} per year. This change has determined that that the new P_{total} is 3.30×10^{-8} per year [Reference 11] which remains below the NRC requirement of 1×10^{-7} per year. This P_{total} is also below the UFSAR Section 3.5.1.3.7 value because the analysis performed used plant specific turbine inspection times to calculate the probabilities.

The second NRC requirement that must be met is the change in probability must be less than a factor of 2 increase. This means that the new P_{total} (or P_1) must be validated to be less than a factor of 2 increase. The factor of 2 increase is from 50.59 Question #2 (Does the Activity Result in More Than a Minimal Increase in the Likelihood of Occurrence of a Malfunction of an SSC Important to Safety?) which clarified in NEI 96-07 Section 4.3.2 [Reference 12]. NEI 96-07 Section 4.3.2 Example 8 states that if the change in likelihood of occurrence of a malfunction is calculated in support of the evaluation and increases by more than a factor of two require NRC approval.

The UFSAR Section 3.5.1.3.7 total probability of strike damage, P_{total}, is 7.48×10^{-8} per year and the new P_{total} is 3.30×10^{-8} per year. This change is less than the UFSAR value ($3.30 \times 10^{-8} < 7.48 \times 10^{-8}$) which also means that this change is not a factor of 2 increase. This change remains within the minimal increase in likelihood of occurrence requirement. The new P_{total} is below the UFSAR Section 3.5.1.3.7 value because the analysis performed used plant specific turbine inspection times to calculate the probabilities. In addition, the probabilistic analysis performed a one to one comparison using the plant specific turbine inspection times. The P_{total} for turbine valve testing time of 6 months is 3.08×10^{-8} per year and the 10 month probability is 3.30×10^{-8} per year. Thus, the plant specific probability does not increase by more than a factor of 2 when increasing the turbine valve testing time to 10 months.

The 10CFR50.59 evaluation demonstrated that this change is acceptable. Each of the 8 questions specifically addressed the proposed change and associated impacts. The TRM 3/4.3.4 change to allow a one time extension from a late date of 7/18/16 to 9/30/16 is acceptable.

References

1. Waterford 3 Updated Final Safety Analysis Report
2. Waterford 3 Technical Requirements Manual
3. NRC Waterford 3 Operating License Amendment 103, Turbine Overspeed Protection Relocation, March 2, 1995.
4. Regulatory Guide 1.115 Revision 1, Protection Against Low Trajectory Turbine Missiles, July 1977.
5. Regulatory Guide 1.115 Revision 2, Protection Against Turbine Missiles, January 2012.

6. Nuclear Electric Insurance Limited (NEIL) – Loss Control Standard 3
7. Waterford 3 Calculation 3T1-18, Turbine Missiles, March 1982.
8. WCAP-16501-P, Extension of Turbine Valve Test Frequency Up to 6 Months for BB-296 Siemens Power Generation (Wesinghouse) Turbines with Steam Chests, February 2006.
9. Westinghouse Technical Memo TM-94246, Turbine Valve Testing Frequency for Entergy Operations Waterford Station, October 1994.
10. ER-W3-2006-0164-000, Revise TRM 3/4.3.4 to Extend LP Turbine Disc Inspection Interval, August 31, 2006.
11. CWTR3-16-14, Transmittal of the Low Pressure Turbine Valve Test Interval Evaluation for Waterford 3, July 12, 2016.
12. NEI 96-07 Revision 1, Guidelines for 10CFR50.59 Implementation, November 2000.
13. NUREG-0787 Supplement 4, NRC Safety Evaluation Report for Waterford 3, October 1982.

Is the validity of this Evaluation dependent on any other change? ☐ **Yes** ☒ **No**

If "Yes," list the required changes/submittals. The changes covered by this 50.59 Evaluation cannot be implemented without approval of the other identified changes (e.g., license amendment request). Establish an appropriate notification mechanism to ensure this action is completed.

Based on the results of this 50.59 Evaluation, does the proposed change require prior NRC approval? ☐ **Yes** ☒ **No**

Preparer: William Steelman / EC65610 for signature / SMI / Engineering / 7-14-16
Name (print) / Signature / Company / Department / Date

Reviewer: Joe Lanci / EC65610 for signature / EOI / Engineering / 7-14-16
Name (print) / Signature / Company / Department / Date

OSRC: Brian Lanka / EC65610 for signature (email) / 7-14-16
Chairman's Name (print) / Signature / Date

16-05
OSRC Meeting #

II. 50.59 EVALUATION

Does the proposed Change being evaluated represent a change to a method of evaluation ONLY? If "Yes," Questions 1 – 7 are not applicable; answer only Question 8. If "No," answer all questions below.

☐ Yes
☒ No

Does the proposed Change:

1. Result in more than a minimal increase in the frequency of occurrence of an accident previously evaluated in the UFSAR?

☐ Yes
☒ No

BASIS:

This change addresses extending the Technical Requirements Manual (TRM) 4.3.4.2.a turbine valve testing late date from 7/18/16 to 9/30/16. The UFSAR was reviewed to identify which accidents previously evaluated could be impacted by the turbine admission valves. The accident analyses that are already included in the UFSAR are as follows:

UFSAR Section 15.1.1.3 (Increased Main Steam Flow) is a moderate frequency incident. The increase in heat removal by the steam generators as a result of increased main steam flow is defined as any rapid increase in steam generator steam flow, other than a steam line rupture, without a turbine trip. The limiting failure for this event is the failure in the Steam Bypass System which could result in an opening of one of the turbine bypass valves.

UFSAR Section 15.1.2.3 (Increased Main Steam Flow with a Concurrent Loss of Offsite Power) is classified as an infrequent incident. For this event, it is conservatively assumed that the increased heat removal due to excess main steam flow uses up all thermal margin initially preserved by CPC's and/or COLSS. Then a Loss of Offsite Power is modeled to further reduce the thermal margin.

UFSAR Section 15.2.1.1 (Loss of External Load) is classified as a moderate frequency incident. A loss of external load results in a reduction of steam flow from the steam generators to the turbine due to closure of the turbine stop valves.

UFSAR Section 15.2.1.2 (Turbine Trip) is classified as a moderate frequency incident. A turbine trip can be produced by a turbine overspeed.

UFSAR Section 15.2.2.1 (Loss of External Load with a Concurrent Single Failure of an Active Component) is classified as an infrequent incident. A loss of external load results in a reduction of steam flow from the steam generators to the turbine due to closure of the turbine stop valves with a concurrent single failure of an active component.

UFSAR Section 15.2.2.2 (Turbine Trip with A Concurrent Single Failure of an Active Component) is classified as an infrequent incident. A turbine trip can be produced by a turbine overspeed.

The determination of the impact on the event frequencies uses guidance provided in NEI 96-07 [Reference 12] Section 4.3.1. This section states:

> During initial plant licensing, accidents were typically assessed in relative frequencies. Minimal increases in frequency resulting from subsequent licensee activities do not significantly change the licensing basis of the facility and do not impact the conclusions reached about acceptability of the facility design.

The TRM 4.3.4.2.a turbine valve testing will impact the probability of failure of an essential SSC because of turbine missile. This change in probability will be used to determine the impact of the initial plant licensing frequencies.

The Waterford 3 original probability of failure of an essential SSC because of turbine missiles is listed in UFSAR Section 3.5.1.3.6 as 9.4×10^{-8} per year (design overspeed 2.6×10^{-8} plus destructive overspeed 6.8×10^{-8}). The turbine missile probabilities were recalculated in 1994 and 2006 using newer values of valve failure rates and are listed in UFSAR Section 3.5.1.3.7. The UFSAR Section 3.5.1.3.7 probability of failure of an essential SSC because of turbine missiles is 7.48×10^{-8} per year (2006 value). The EC65610 analysis used the same methodology as the UFSAR Section 3.5.1.3.7 and obtained a turbine missile strike failure rate of 3.30×10^{-8} per year. This P_{total} is below the UFSAR Section 3.5.1.3.7 value because the analysis performed used plant specific turbine inspection times to calculate the probabilities. The EC65610 probability remains bounded by the original licensing values which means the original accident frequencies would also remain bounded. Thus, there is no minimal increase in the frequency of occurrence of an accident previously evaluated in the UFSAR.

2. Result in more than a minimal increase in the likelihood of occurrence of a malfunction of a structure, system, or component important to safety previously evaluated in the UFSAR? ☐ Yes ☒ No

BASIS:

This change addresses extending the Technical Requirements Manual (TRM) 4.3.4.2.a turbine valve testing late date from 7/18/16 to 9/30/16. This change was performed by using the UFSAR Section 3.5.1.3.7 probability calculation methodology and updating for a TRM 4.3.4.2.a turbine valve testing time of 10 months and plant specific turbine inspection data. The use of the plant specific turbine inspection data reduced the probability to below the UFSAR values. There are two (2) NRC requirements that must be met for this change to be acceptable. The first comes from Regulatory Guide 1.115 [Reference 5]. Regulatory Guide 1.115 page 4 states that the probability of failure of an essential Structure, System, or Component (SSC) because of turbine missiles is calculated from equation $P_{total} = P_1 \times P_2 \times P_3$. Where P_1 is the probability of turbine missile generation resulting in the ejection of turbine disk (or internal structure) fragments through the turbine casing. P_2 is the probability of ejected missiles perforating intervening barriers and striking essential SSCs. P_3 is the probability of essential SSCs that are struck failing to perform their safety functions. P_{total} is limited to less than $1x10^{-7}$ per year, which the NRC staff considers to be an acceptable risk rate for the loss of an essential SSC from a single event. Thus, the first requirement is P_{total} is less than $1x10^{-7}$ per year.

Regulatory Guide 1.115 Table 1 (Summary of the NRC Criteria for Turbine Missiles) provides the regulatory acceptance criteria. Regulatory Guide 1.115 Table 1 shows that the NRC assumes the $P_2 \times P_3 = 10^{-2}$ per year for unfavorably oriented turbines. The $P_2 \times P_3$ value is an NRC assumed conservative value; the site specific calculation for $P_2 \times P_3$ is 2.128×10^{-3}. The NRC concluded in the original licensing of Waterford 3 that the turbine generator placement and orientation is unfavorable with respect to the plant containment building and other vital areas. This configuration places the Reactor Building, Reactor Auxiliary Building (RAB), and control room within the path of both the high and low trajectory turbine missile. With $P_2 \times P_3 = 10^{-2}$ per year, the NRC acceptance criteria for P_1 is 10^{-5} per year. This means that if P_1 is less than 10^{-5} per year, then P_{total} will be less than $1x10^{-7}$ per year.

In simplistic terms, the probability of missile generation, P_1, is the sum of the probability of a given turbine speed multiplied by the conditional probability of generation of a missile if the turbine is at that speed. The turbine speed components generally consist of the running speed, design overspeed, and destructive overspeed with the conditional probability of generation of a missile being a function of rotor durability, rotor inspection frequency, turbine valve failure rates, turbine valve test frequency and generator trip frequency.

Summary of Results Table

Description	P_{total} – UFSAR Section 3.5.1.3.7	P_{total} – EC65610 Using plant specific turbine inspection data	P_{total} - Acceptance Limit
Current TRM 4.3.4.2.a turbine valve testing time	7.48×10^{-8} per year	3.08×10^{-8} per year	$< 1 \times 10^{-7}$ per year
EC65610 TRM 4.3.4.2.a turbine valve testing extension to 10 months	NA	3.30×10^{-8} per year	$< 1 \times 10^{-7}$ per year

UFSAR Section 3.5.1.3.7 provides the P_{total} results for the current TRM 3/4.3.4 surveillance frequencies. The UFSAR Section 3.5.1.3.7 total probability of strike damage, P_{total}, is 7.48×10^{-8}

per year. This change has determined that that the new P_{total} is 3.30 x 10^{-8} per year [Reference 11] which remains below the NRC requirement of 1x10^{-7} per year. This P_{total} is also below the UFSAR Section 3.5.1.3.7 value because the analysis performed used plant specific turbine inspection times to calculate the probabilities.

The second NRC requirement that must be met is the change in probability must be less than a factor of 2 increase. This means that the new P_{total} (or P_1) must be validated to be less than a factor of 2 increase. The factor of 2 increase is from NEI 96-07 Section 4.3.2 [Reference 12]. NEI 96-07 Section 4.3.2 Example 8 states that if the change in likelihood of occurrence of a malfunction is calculated in support of the evaluation and increases by more than a factor of two then NRC approval is required.

The UFSAR Section 3.5.1.3.7 total probability of strike damage, P_{total}, is 7.48 x 10^{-8} per year and the new P_{total} is 3.30 x 10^{-8} per year. This change is less than the UFSAR value (3.30 x 10^{-8} < 7.48 x 10^{-8}) which also means that this change is not a factor of 2 increase. This change remains within the minimal increase in likelihood of occurrence requirement. The new P_{total} is below the UFSAR Section 3.5.1.3.7 value because the analysis performed used plant specific turbine inspection times to calculate the probabilities. In addition, the probabilistic analysis performed a one to one comparison using the plant specific turbine inspection times. The P_{total} for turbine valve testing time of 6 months is 3.08 x 10^{-8} per year and the 10 month probability is 3.30 x 10^{-8} per year. Thus, the plant specific probability does not increase by more than a factor of 2 when increasing the turbine valve testing time to 10 months. This change remains within the minimal increase in likelihood of occurrence requirement.

3. Result in more than a minimal increase in the consequences of an accident previously evaluated in the UFSAR? ☐ Yes ☒ No

BASIS:

When determining which activities represent "more than a minimal increase in consequences" pursuant to 10 CFR 50.59, it must be recognized that "consequences" means dose. Therefore, an increase in consequences must involve an increase in radiological doses to the public or to control room operators.

This change addresses extending the Technical Requirements Manual (TRM) 4.3.4.2.a turbine valve testing late date from 7/18/16 to 9/30/16. The UFSAR accidents previously evaluated which could be impacted by the turbine admission valves are as follows:

UFSAR Section 15.1.1.3 (Increased Main Steam Flow) event causes an increase in heat removal by the steam generators as a result of increased main steam flow. The increased main steam flow is defined as any rapid increase in steam generator steam flow without a turbine trip. The limiting failure for this event is the failure in the steam bypass system which could result in an opening of one of the turbine bypass valves. With the steam bypass being the limiting failure, the extension of the TRM 4.3.4.2.a turbine valve testing will have no impact on these event consequences. Thus, no adverse impact.

UFSAR Section 15.1.2.3 (Increased Main Steam Flow with a Concurrent Loss of Offsite Power) event is conservatively assumed that the increased heat removal due to excess main steam flow uses up all thermal margin initially preserved by CPC's and/or COLSS. Then a Loss of Offsite Power is modeled to further reduce the thermal margin. The excess steam demand portion of this transient could be caused any number of failures (steam

bypass valve, atmospheric dump valve, steam leak, turbine controls). This event is conservatively initiates an increased steam flow (cause is not important) to reduce thermal margin just above the CPC trip setpoint. For this event, turbine valves cannot cause an excess steam demand more severe than that analyzed in this section. Thus, no adverse impact.

UFSAR Section 15.2.1.1 (Loss of External Load) event results in a reduction of steam flow from the steam generators to the turbine due to closure of the turbine stop valves. This event is a heat up transient which causes a primary and secondary pressure transient, so a rapid closure of the turbine stop valves produces the most adverse consequences. The TRM 4.3.4.2.a turbine valve testing extension cannot cause a more rapid closure of the turbine stop valves. The turbine valve testing is intended to validate free and smooth motion to ensure no buildup of deposits on the shafts. This means for heat up events, the potential slower motion would be advantageous and make the potential radiological consequences less adverse.

In addition, the loss of external load radiological consequences due to steam releases from the secondary system are less severe than the consequences of the inadvertent opening of the atmospheric dump valve discussed in UFSAR Section 15.1.2.4.5. The loss of external load radiological consequences will continue to be bounded by the UFSAR Section 15.1.2.4.5 event.

UFSAR Section 15.2.1.2 (Turbine Trip) is classified as a moderate frequency incident. A turbine trip can be produced by a turbine overspeed. This event is a heat up transient which causes a primary and secondary pressure transient, so a rapid closure of the turbine stop valves produces the most adverse consequences. The TRM 4.3.4.2.a turbine valve testing extension cannot cause a more rapid closure of the turbine stop valves. The turbine valve testing is intended to validate free and smooth motion to ensure no buildup of deposits on the shafts. This means for heat up events, the potential slower motion would be advantageous and make the potential radiological consequences less adverse.

In addition, the turbine trip radiological consequences due to steam releases from the secondary system are less severe than the consequences of the inadvertent opening of the atmospheric dump valve discussed in UFSAR Section 15.1.2.4.5. The turbine trip radiological consequences will continue to be bounded by the UFSAR Section 15.1.2.4.5 event.

UFSAR 15.2.2.1 (Loss of External Load with a Concurrent Single Failure of an Active Component) results in a reduction of steam flow from the steam generators to the turbine due to closure of the turbine stop valves with a concurrent single failure of an active component. This event is a heat up transient which causes a primary and secondary pressure transient, so a rapid closure of the turbine stop valves produces the most adverse consequences. The TRM 4.3.4.2.a turbine valve testing extension cannot cause a more rapid closure of the turbine stop valves. The turbine valve testing is intended to validate free and smooth motion to ensure no buildup of deposits on the shafts. This means for a heat up events, the potential slower motion would be advantageous and make the potential radiological consequences less adverse.

In addition, the loss of external load radiological consequences due to steam releases from the secondary system are less severe than the consequences of the inadvertent opening of the atmospheric dump valve discussed in UFSAR Section 15.1.2.4.5. The

loss of external load radiological consequences will continue to be bounded by the UFSAR Section 15.1.2.4.5 event.

UFSAR Section 15.2.2.2 (Turbine Trip with A Concurrent Single Failure of an Active Component) is classified as an infrequent incident. A turbine trip can be produced by a turbine overspeed. This event is a heat up transient which causes a primary and secondary pressure transient, so a rapid closure of the turbine stop valves produces the most adverse consequences. The TRM 4.3.4.2.a turbine valve testing extension cannot cause a more rapid closure of the turbine stop valves. The turbine valve testing is intended to validate free and smooth motion to ensure no buildup of deposits on the shafts. This means for heat up events, the potential slower motion would be advantageous and make the potential radiological consequences less adverse.

In addition, the turbine trip radiological consequences due to steam releases from the secondary system are less severe than the consequences of the inadvertent opening of the atmospheric dump valve discussed in UFSAR Section 15.1.2.4.5. The turbine trip radiological consequences will continue to be bounded by the UFSAR Section 15.1.2.4.5 event.

The accidents previously evaluated in the UFSAR were assessed for potential impacts and no adverse consequences were identified. The proposed change does not adversely impact the capability of the turbine valves to perform their specified functions. Therefore, the proposed change does not result in more than a minimal increase in the consequences of an accident previously evaluated in the UFSAR.

4. Result in more than a minimal increase in the consequences of a malfunction of a structure, system, or component important to safety previously evaluated in the UFSAR? ☐ Yes ☒ No

BASIS:

When determining which malfunctions represent "more than a minimal increase in consequences" pursuant to 10 CFR 50.59, it must be recognized that "consequences" means dose. This change addresses extending the Technical Requirements Manual (TRM) 4.3.4.2.a turbine valve testing late date from 7/18/16 to 9/30/16.

In general, design basis accidents have an event initiator and may assume one active single failure. The design basis accidents have identified their limiting single failures with respect to specific acceptance criteria. This change does not change any of the physical structures, systems, or components. The proposed change also does not create any new system interactions that could cause a malfunction. The TRM 4.3.4.2.a turbine valve testing extension only changes the time for the testing. The system specified functions and interactions remain unchanged. This means that the existing UFSAR limiting failures remain unchanged.

Therefore, the turbine valve potential failures remain no more adverse than that already analyzed in the UFSAR. The proposed change does not result in more than a minimal increase in the consequences of a malfunction of a structure, system, or component important to safety previously evaluated in the UFSAR.

5. Create a possibility for an accident of a different type than any previously evaluated in the UFSAR? ☐ Yes ☒ No

BASIS:

UFSAR Section 3.5.1.3 (Turbine Missiles) describes failures that could occur in the large steam turbines that could produce large high-energy missiles. The potential for damage to safety related structures, systems and components due to such turbine failure has been evaluated to determine whether additional protection, beyond that inherently provided by existing structural shielding, is required to further reduce the damage probability. UFSAR Section 10.2.3 (Turbine Disk Integrity) describes the turbine materials and potential failure modes. UFSAR Section 15.2.1.2 and 15.2.2.2 already considered a turbine trip due to an overspeed condition.

The generation of turbine missiles and turbine overspeed are already considered within the UFSAR 3.5.1.3, 10.2.3, 15.2.1.2, and 15.2.2.2. This change addresses extending the Technical Requirements Manual (TRM) 4.3.4.2.a turbine valve testing late date from 7/18/16 to 9/30/16. A change in interval for turbine valve testing does not create any additional failure mechanisms. Therefore, an accident of a different type is not possible.

6. Create a possibility for a malfunction of a structure, system, or component important to safety with a different result than any previously evaluated in the UFSAR? ☐ Yes ☒ No

BASIS:
Regulatory Guide 1.115 [Reference 5] page 4 states that the probability of failure of an essential Structure, System, or Component (SSC) because of turbine missiles is calculated from equation $P_{total} = P_1 \times P_2 \times P_3$. Where P_1 is the probability of turbine missile generation resulting in the ejection of turbine disk (or internal structure) fragments through the turbine casing. P_2 is the probability of ejected missiles perforating intervening barriers and striking essential SSCs. P_3 is the probability of essential SSCs that are struck failing to perform their safety functions.

The P_2 probability involves the potential for striking new or different targets. The P_3 probability involves the potential for those new targets failing. The P2 and P3 probabilities remain unchanged from those already contained in UFSAR Section 3.5.1.3.7 which means no new targets or failures are predicted. That also means that this change will not result in a malfunction of a structure, system, or component important to safety with a different result than any previously evaluated in the UFSAR.

7. Result in a design basis limit for a fission product barrier as described in the UFSAR being exceeded or altered? ☐ Yes ☒ No

BASIS:

This change addresses extending the Technical Requirements Manual (TRM) 4.3.4.2.a turbine valve testing late date from 7/18/16 to 9/30/16. The UFSAR accidents previously evaluated which could be impacted by the turbine admission valves are as follows:

UFSAR Section 15.1.1.3 (Increased Main Steam Flow) event causes an increase in heat removal by the steam generators as a result of increased main steam flow. The increased main steam flow is defined as any rapid increase in steam generator steam flow without a turbine trip. The limiting failure for this event is the failure in the steam bypass system which could result in an opening of one of the turbine bypass valves. With the steam bypass being the limiting failure, the extension of the TRM 4.3.4.2.a turbine valve testing will have no impact on these event consequences. Thus, no

adverse impact.

UFSAR Section 15.1.2.3 (Increased Main Steam Flow with a Concurrent Loss of Offsite Power) event is conservatively assumed that the increased heat removal due to excess main steam flow uses up all thermal margin initially preserved by CPC's and/or COLSS. Then a Loss of Offsite Power is modeled to further reduce the thermal margin. The excess steam demand portion of this transient could be caused any number of failures (steam bypass valve, atmospheric dump valve, steam leak, turbine controls). This event is conservatively initiates an increased steam flow (cause is not important) to reduce thermal margin just above the CPC trip setpoint. For this event, turbine valves cannot cause an excess steam demand more severe than that analyzed in this section. Thus, no adverse impact.

UFSAR Section 15.2.1.1 (Loss of External Load) event results in a reduction of steam flow from the steam generators to the turbine due to closure of the turbine stop valves. This event is a heat up transient which causes a primary and secondary pressure transient, so a rapid closure of the turbine stop valves produces the most adverse consequences. The TRM 4.3.4.2.a turbine valve testing extension cannot cause a more rapid closure of the turbine stop valves. In addition, UFSAR Section 15.2.1.1.4 (Barrier Performance) states that the loss of external load consequences would be less adverse than those following an UFSAR Section 15.2.1.3 loss of condenser vacuum. This means that no matter the creditable failure of the turbine valves, the barrier consequences would remain bounded by another event. Thus, no adverse impact.

UFSAR Section 15.2.1.2 (Turbine Trip) is classified as a moderate frequency incident. A turbine trip can be produced by a turbine overspeed. This event is a heat up transient which causes a primary and secondary pressure transient, so a rapid closure of the turbine stop valves produces the most adverse consequences. The TRM 4.3.4.2.a turbine valve testing extension cannot cause a more rapid closure of the turbine stop valves. In addition, UFSAR Section 15.2.1.2.4 (Barrier Performance) states that the loss of external load consequences would be less adverse than those following an UFSAR Section 15.2.1.3 loss of condenser vacuum. This means that no matter the creditable failure of the turbine valves, the barrier consequences would remain bounded by another event. Thus, no adverse impact.

UFSAR 15.2.2.1 (Loss of External Load with a Concurrent Single Failure of an Active Component) results in a reduction of steam flow from the steam generators to the turbine due to closure of the turbine stop valves with a concurrent single failure of an active component. This event is a heat up transient which causes a primary and secondary pressure transient, so a rapid closure of the turbine stop valves produces the most adverse consequences. The TRM 4.3.4.2.a turbine valve testing extension cannot cause a more rapid closure of the turbine stop valves. In addition, UFSAR Section 15.2.2.1.4 (Barrier Performance) states that the loss of external load consequences would be less adverse than those following an UFSAR Section 15.2.1.3 loss of condenser vacuum. This means that no matter the creditable failure of the turbine valves, the barrier consequences would remain bounded by another event. Thus, no adverse impact.

UFSAR Section 15.2.2.2 (Turbine Trip with A Concurrent Single Failure of an Active Component) is classified as an infrequent incident. A turbine trip can be produced by a turbine overspeed. This event is a heat up transient which causes a primary and secondary pressure transient, so a rapid closure of the turbine stop valves produces the

most adverse consequences. The TRM 4.3.4.2.a turbine valve testing extension cannot cause a more rapid closure of the turbine stop valves. In addition, UFSAR Section 15.2.2.2.4 (Barrier Performance) states that the loss of external load consequences would be less adverse than those following an UFSAR Section 15.2.1.3 loss of condenser vacuum. This means that no matter the creditable failure of the turbine valves, the barrier consequences would remain bounded by another event. Thus, no adverse impact.

The accidents previously evaluated in the UFSAR were assessed for potential impacts and no adverse consequences were identified. Thus, a design basis limit for a fission product barrier as described in the UFSAR will not be exceeded or altered.

8. Result in a departure from a method of evaluation described in the UFSAR used in establishing the design bases or in the safety analyses? ☐ Yes ☒ No

BASIS:

Methods of evaluation means the calculational framework used for evaluating behavior or response of the facility or an SSC [Reference 12 Section 3.10]. This change is not impacting the methodology or topical reports used in the UFSAR analyses. UFSAR Section 3.5.1.3.7 already contained a description of the analysis methods. The EC65610 analysis used this same methodology which is consistent with that described in Regulatory Guide 1.115 [Reference 4 and 5]. Therefore, the proposed change does not result in a departure from a method of evaluation described in the UFSAR used in establishing the design bases or in the safety analyses.

If any of the above questions is checked "Yes," obtain NRC approval prior to implementing the change by initiating a change to the Operating License in accordance with NMM Procedure EN-LI-103.

I. OVERVIEW / SIGNATURES[1]

Facility: Waterford 3 **Evaluation # / Rev. #:** 17-01 / 0

Proposed Change / Document: EC 68581, Evaluation of Reactor Vessel Surveillance and Current License Basis

Description of Change: CR-WF3-2016-6358 identified that the WF3 surveillance capsule W-83 neutron fluence was analyzed using the Westinghouse RAPTOR-M3G code, which is not a fluence analysis method in the current Waterford 3 licensing basis. The analysis results from capsule W-83 were used in the Reactor Vessel Integrity Time-Limited Aging Analysis (TLAA), WF3-EP-16-00001 (WCAP-18002-NP), to predict the adjusted reference temperature (ART), upper shelf energy (USE), and pressurized thermal shock reference temperature (RT_{PTS}) for the end of the current license period (32 effective full power years of operation). Since the analysis of capsule W-83 was required by 10CFR50 Appendix H for the current license period, the ART, USE, and RT_{PTS} derived from it should be incorporated into the current license basis.

Summary of Evaluation:
The design function of the WF3 reactor vessel as described in the UFSAR is to structurally support the reactor core, maintain the reactor coolant pressure boundary, and provide a barrier to radiological release under design basis conditions.

The purpose of the reactor vessel fluence calculation method is to calculate cumulative neutron irradiation levels to which the reactor vessel materials are subjected. The calculated fluence is used as an input for calculating Pressure-Temperature limit curves and predicting pressurized thermal shock (RT_{PTS}) and Upper Shelf Energy (USE) fracture toughness-related screening criteria as required in 10CFR50.61 and 10CFR50 Appendix G. The neutron fluence calculation methodology described in the NRC Waterford 3 Amendment 196 Safety Evaluation Report [Reference 12] for WCAP-16002-NP [Reference 13] and WCAP-16088-NP [Reference 14] was DORT (Discrete Ordinates Code). WCAP-16002-NP describes the DORT code. WCAP-16088-NP references WCAP-14040-NP-A [Reference 15] which describes the DORT code. WCAP-14040-NP-A is the Westinghouse methodology used to develop overpressure system setpoints and reactor coolant system heatup and cooldown limit curves. WCAP-14040-NP-A has been generically approved by the NRC for Westinghouse use.

This change uses a new fluence calculation methodology (RAPTOR-M3G) to re-analyze past and predict future neutron fluence on the WF3 reactor vessel. RAPTOR-M3G is different from DORT because it computes neutron fluence in three dimensions simultaneously, rather than using a 2D-to-3D synthesis method like DORT.

Question 8 specifically addressed the proposed change and associated impacts. Based upon the guidance of NEI 96-07, it has been concluded that this change is not a departure from a method of evaluation because it was determined that the method is appropriate for the intended application, the terms and conditions for its use as specified in the SER have been satisfied, and the method has been approved by the NRC. Consistent with the Catawba SER Section 3.2.6.3 [Reference 5], this evaluation adequately addressed the four criteria of RG 1.190. Since RAPTOR-M3G was approved for Catawba and Waterford 3 met all the conditions outlined in the Catawba SER as required by NEI 96-07, this method of evaluation is acceptable with respect to the use of the RAPTOR-M3G as a neutron fluence calculation at Waterford 3.

[1] Signatures may be obtained via electronic processes (e.g., PCRS, ER processes), manual methods (e.g., ink signature), e-mail, or telecommunication. If using an e-mail or telecommunication, attach it to this form.

References

1. Waterford 3 Technical Specification through Amendment 249.
2. Waterford 3 Updated Final Safety Analysis Report through Amendment 309.
3. NRC Regulatory Guide 1.187, Guidance for Implementation of 10CFR50.59 Changes, Tests, and Experiments, November 2000.
4. NEI 96-07 Revision 1, Guidelines for 10 CFR 50.59 Evaluations, November 2000.
5. NRC Amendment, Catawba Nuclear Station Units 1 and 2 – Issuance of Amendments Regarding Measurement Uncertainty Recapture Power Uprate, April 29, 2016 [NRC ADAMS Accession Number ML16081A333].
6. Regulatory Guide 1.190, Calculational and Dosimetry Methods for Determining Pressure Vessel Neutron Fluence.
7. CWTR3-16-37 Revision 1, Transmittal of LTR-REA-16-117 Rev. 1, Response to the NRC Request for Additional Information Reguarding RAPTOR-M3G on the Waterford Unit 3 License Renewal Application, January 6, 2017.
8. Westinghouse Report WCAP-17969-NP Revision 0, Analysis of Capsule 83° from the Entergy Operations, Inc. Waterford Unit 3 Reactor Vessel Radiation Surveillance Program, April 2015.
9. Westinghouse Report WCAP-18002-NP, Waterford Unit 3 Time Limited Aging Analysis on Reactor Vessel Integrity, July 2015.
10. WCAP-16083-NP Revision 1, Benchmark Testing of the FERRET Code for Least Squares Evaluation of Light Water Reactor Dosimetry, April 2013 [NRC ADAMS Accession Number ML14353A028].
11. WCAP-17669-NP Revision 0, Catawba Unit 1 Measurement Uncertainty Recapture (MUR) Power Uprate: Reactor Vessel Integrity and Neutron Fluence Evaluations, June 2013 [NRC ADAMS Accession Number ML14353A029].
12. NRC Waterford 3 Amendment 196, Waterford Steam Electric Station Unit 3 – Issuance of Amendment Re: Pressure Temperature Limit Curves to 32 Effective Full Power years with Power Uprate, June 16, 2004.
13. WCAP-16002-NP, Analysis of Capsule 263 from the Entergy Operations Waterford Unit 3 Reactor Vessel Radiation Surveillance Program, March 2003.
14. WCAP-16088-NP Revision 1, Waterford Unit 3 Reactor Vessel Heatup and Cooldown Limit Curves for Normal Operation, September 2004.
15. WCAP- 14040-NP-A Revision 2, Methodology used to Develop Cold Overpressure Mitigating system Setpoints and RCS Heatup and Cooldown Limit Curves, January 1996.

Is the validity of this Evaluation dependent on any other change? ☐ **Yes** ☒ **No**

If "Yes," list the required changes/submittals. The changes covered by this 50.59 Evaluation cannot be implemented without approval of the other identified changes (e.g., license amendment request). Establish an appropriate notification mechanism to ensure this action is completed.

Based on the results of this 50.59 Evaluation, does the proposed change require prior NRC approval? ☐ **Yes** ☒ **No**

Preparer: William Steelman / See Associated EC 68581 / SMI / Engineering / 2-2-17
Name (print) / Signature / Company / Department / Date

Reviewer: Jason Laque / See Associated EC 68581 / Entergy / Engineering / 2-2-17
Name (print) / Signature / Company / Department / Date

OSRC: Ran Gilmore / See Associated EC 68581 / See Associated EC 68581
Chairman's Name (print) / Signature / Date

17-03
OSRC Meeting #

II. 50.59 EVALUATION

Does the proposed Change being evaluated represent a change to a method of evaluation ONLY? If "Yes," Questions 1 – 7 are not applicable; answer only Question 8. If "No," answer all questions below.

☒ Yes
☐ No

Does the proposed Change:

1. Result in more than a minimal increase in the frequency of occurrence of an accident previously evaluated in the UFSAR?

☐ Yes
☐ No

BASIS:

2. Result in more than a minimal increase in the likelihood of occurrence of a malfunction of a structure, system, or component important to safety previously evaluated in the UFSAR?

☐ Yes
☐ No

BASIS:

3. Result in more than a minimal increase in the consequences of an accident previously evaluated in the UFSAR?

☐ Yes
☐ No

BASIS:

4. Result in more than a minimal increase in the consequences of a malfunction of a structure, system, or component important to safety previously evaluated in the UFSAR?

☐ Yes
☐ No

BASIS:

5. Create a possibility for an accident of a different type than any previously evaluated in the UFSAR?

☐ Yes
☐ No

BASIS:

6. Create a possibility for a malfunction of a structure, system, or component important to safety with a different result than any previously evaluated in the UFSAR?

☐ Yes
☐ No

BASIS:

7. Result in a design basis limit for a fission product barrier as described in the UFSAR being exceeded or altered?

☐ Yes
☐ No

BASIS:

8. Result in a departure from a method of evaluation described in the UFSAR used in establishing the design bases or in the safety analyses? ☐ Yes ☒ No

BASIS:

EC 68581 uses the RAPTOR-M3G fluence code. This change in methodology is evaluated for use in the Waterford 3 design and licensing basis. NRC Regulatory Guide 1.187 [Reference 3] provides guidance on complying with the revised requirements of 10CFR50.59. Regulatory Guide 1.187 endorses NEI 96-07 Revision 1 [Reference 4] as providing methods that are acceptable to the NRC staff for complying with the provisions of 10 CFR 50.59.

NEI 96-07 Section 3.10 states that methods of evaluation means the calculational framework used for evaluating behavior or response of the facility or a structure, system or component.

The purpose of the reactor vessel fluence calculation method is to calculate cumulative neutron irradiation levels to which the reactor vessel materials are subjected. The calculated fluence is used as an input for calculating Pressure-Temperature limit curves and predicting pressurized thermal shock (RT_{PTS}) and Upper Shelf Energy (USE) fracture toughness-related screening criteria as required in 10CFR50.61 and 10CFR50 Appendix G. The neutron fluence calculation methodology described in the NRC Waterford 3 Amendment 196 Safety Evaluation Report [Reference 12] for WCAP-16002-NP [Reference 13] and WCAP-16088-NP [Reference 14] was DORT (Discrete Ordinates Code). WCAP-16002-NP describes the DORT code. WCAP-16088-NP references WCAP-14040-NP-A [Reference 15] which describes the DORT code. WCAP-14040-NP-A is the Westinghouse methodology used to develop overpressure system setpoints and reactor coolant system heatup and cooldown limit curves. WCAP-14040-NP-A has been generically approved by the NRC for Westinghouse use.

This change uses a new fluence calculation methodology (RAPTOR-M3G) to re-analyze past and predict future neutron fluence on the WF3 reactor vessel. RAPTOR-M3G is different from DORT because it computes neutron fluence in three dimensions simultaneously, rather than using a 2D-to-3D synthesis method like DORT. Additionally, RAPTOR-M3G utilizes parallel processing rather than serial processing to make computations more efficient. Since both DORT and RAPTOR-M3G are calculation frameworks used to calculate the reactor vessel fluence, these all would be considered methods of evaluations.

NEI 96-07 Section 3.4 defines departure from a method of evaluation as follows:

> Departure from a method of evaluation described in the FSAR (as updated) means (i) changing any of the elements of the method described in the FSAR (as updated) unless the results of the analysis are conservative or essentially the same; or (ii) changing from a method described in the FSAR to another method unless that method has been approved by NRC for the intended application.

NEI 96-07 Section 3.4 provides a discussion of ways to change the method of evaluation that are allowable. One way is that the method of evaluation is approved by the NRC for the intended application.

> "Approved by the NRC for the Intended Application"
> Rather than make a minor change to an existing method of evaluation, a licensee may also adopt completely new methodology without prior NRC approval provided the new method is approved by the NRC for the intended application. A new method is "approved by the NRC for the intended application" if it is approved for the type of analysis being conducted and the licensee satisfies applicable terms and conditions for its use. Specific guidance for making this determination is provided in Section 4.3.8.2.

Catawba Nuclear Station has obtained approval [Reference 5] for the use of RAPTOR-M3G for the same fluence calculation methodology that Waterford 3 has utilized.

NEI 96-07 Section 4.3.8.2 provides guidance for changing from one method of evaluation to another. NEI 96-07 Section 4.3.8.3 provides examples to use to guide the user in determining if a change is allowable. Example 4 most closely aligns with the identified change of method. NEI 96-07 contains questions/answers at the end of the document. The questions and answers items E.5, E.14, and E.16 provide additional information that are consistent with Example 4. Example 4 is listed as follows:

> Licensee X has received NRC approval for the use of a method of evaluation at Facility A for performing steamline break mass and energy release calculations for environmental qualification evaluations. The terms and conditions for the use of the method are detailed in the NRC SER. The SER also describes limitations associated with the method. Licensee Y wants to apply the method at its Facility B. Licensee Y has satisfied the guidelines of GL 83-11, Supplement 1. After reviewing the method, approved application, SER and related documentation, to verify that applicable terms, conditions and limitations are met and to ensure the method is applicable to their type of plant, Licensee Y conducts a 10 CFR 50.59 evaluation. Licensee Y concludes that the change is not a departure from a method of evaluation because it has determined the method is appropriate for the intended application, the terms and conditions for its use as specified in the SER have been satisfied, and the method has been approved by the NRC.

Catawba Nuclear Station license amendment Safety Evaluation Report (SER) Section 3.2.6 describes the NRC review and approval of the neutron fluence calculation method. The NRC staff evaluated the RAPTOR-M3G neutron fluence method in accordance with Regulatory Guide 1.190 [Reference 6]. The Catawba SER provided criteria associated with Regulatory Guide 1.190 stating that an acceptable neutron fluence calculation has the following attributes:

- Criteria 1 - Performed using an acceptable methodology
- Criteria 2 - Contains an analytic uncertainty analysis identifying possible sources of uncertainty
- Criteria 3 - Contains a benchmark comparison to approved results of a test facility
- Criteria 4 - Demonstrates plant-specific qualification by comparison to measured fluence values

NEI 96-07 Section 4.3.8.2 allows the use of a new method of evaluation if it has been approved by the NRC and the licensee meets all the safety evaluation report restrictions and limitations. The NRC evaluated [Catawba SER Section 3.2.6.2] the use of RAPTOR-M3G at Catawba with respect to the four Regulatory Guide 1.190 criteria. This Waterford 3 evaluation provides a detailed explanation consistent with the Catawba NRC safety evaluation report information. The Westinghouse evaluation CWTR3-16-37 [Reference 7] provides the underlying technical basis to support compliance with Regulatory Guide 1.190. WCAP-17969-NP [Reference 8] and WCAP-18002-NP [Reference 9] are the Waterford 3 capsule analyses that utilized the RAPTOR code and contain information associated with this change.

<u>Criteria 1 - Performed using an acceptable methodology</u>
Reactor vessel neutron fluence has traditionally been quantified using discrete ordinates radiation transport calculations. Codes used to perform early calculations include TWOTRAN and DOT. With the limitations on computing power at the time, both TWOTRAN and DOT were only capable of analyzing one-dimensional and two-dimensional models. In the 1980s, Oak Ridge National Laboratory developed the DORT (two-dimensional) and TORT (three-dimensional) codes, and these codes remain in widespread use today.

The methodology employed by RAPTOR-M3G is essentially the same as the methodology employed by the TORT code, with solution enhancements resulting from the last two decades of research. RAPTOR-M3G has been designed from its inception as a parallel-processing code, and adheres to best practices of software development. It has been rigorously tested against the TORT code and benchmarked on an extensive set of academic and real-world problems.

The methodology used to provide neutron exposure evaluations for the reactor pressure vessel (RPV) follows the guidance provided in Regulatory Guide 1.190. The geometric modeling applied for Waterford Unit 3 complies with Regulatory Position 1.1.1 of Regulatory Guide 1.190. The use of the BUGLE-96 cross-section library with the P5 Legendre expansion mode for Waterford Unit 3 and comparisons to the newer BUGLE-B7 library complies with Regulatory Position 1.1.2 of Regulatory Guide 1.190. The core neutron source definition methodology complies with Regulatory Position 1.2 in Regulatory Guide 1.190. The RAPTOR-M3G calculations comply with Regulatory Positions 1.3.1 and 1.3.3 of Regulatory Guide 1.190. Regulatory Position 1.3.2 is not applicable because deterministic (not Monte Carlo) calculations are being performed. Regulatory Position 1.3.4 is not applicable because 3-D calculations are performed, and the synthesis technique is not used. Regulatory Position 1.3.5 is not applicable because cavity dosimetry was not analyzed.

The methodology used to provide neutron exposure evaluations for the reactor pressure vessel (RPV) follows the guidance provided in Regulatory Guide 1.190. The use of RAPTOR-M3G satisfies all regulatory positions in Regulatory Guide 1.190 pertinent to neutron fluence calculation methods.

Criteria 2 - Contains an analytic uncertainty analysis identifying possible sources of uncertainty
Operating reactors are subject to several uncertainties that may influence the validity of the calculated neutron fluence results. To assess the impact of uncertainties in the core neutron source on calculated neutron fluence results, changes in the parameters absolute source strength of peripheral fuel assemblies, Pin-by-pin spatial distributions of neutron source at the core periphery burnup of the peripheral fuel assemblies, and axial power distribution were evaluated. To assess the impact of uncertainties in the location and thickness of reactor components, as well as uncertainties in reactor coolant temperature, on calculated neutron fluence results, changes in the parameters reactor internals dimensions, reactor vessel inner radius, reactor vessel thickness, dosimetry positioning, coolant temperature, and core peripheral modeling were evaluated.

The total analytic uncertainty is derived by combining the individual uncertainty components in quadrature using the "rootsum-of-the-squares" method. The analytic uncertainty analysis was performed with both the TW and DTW differencing schemes. In general, the analytic uncertainty values are consistent between the two differencing schemes; however, in cases where there are differences, the higher uncertainty value was selected. This analytic uncertainty analysis addresses Regulatory Position 1.4.1 of Regulatory Guide 1.190.

The benchmark uncertainty, analytic uncertainty, and other (geometrical or operational) uncertainty components represent percent uncertainty at the 1σ level. When the uncertainty values (3%, 8%, 11%, and 5%) are combined in quadrature, the resultant overall 1σ calculational uncertainty is estimated to be bounded by 15% for pressure vessel inner radius within the core-adjacent beltline region. This uncertainty quantification addresses Regulatory Position 1.4.3 of Regulatory Guide 1.190.

Criteria 3 - Contains a benchmark comparison to approved results of a test facility

Simulator Benchmarks

Several simulator benchmark experiments have been performed for the purpose of providing a qualification basis for neutron fluence analysis methods. The experiments were performed in laboratory settings, and simulate the configuration of an operating nuclear reactor on a smaller scale.

The PCA Pressure Vessel Facility Benchmark is an industry-standard benchmark that can be used to partially qualify a fluence determination methodology according to Regulatory Guide 1.190. The PCA facility provides a small-scale simulation of the configuration of a Pressurized Water Reactor (PWR). The geometry, material compositions, and neutron source for this experiment were all well characterized, and accurate dosimetry measurements were collected at several locations of interest.

The VENUS-1 experiment is another commonly-used qualification benchmark. As with the PCA benchmark, the critical variables affecting the measurements were carefully measured and recorded. The VENUS-1 benchmark correctly represents the heterogeneities in a PWR, which is applicable to the WF3 design, and includes a stainless steel core baffle, core barrel, and neutron pad. The benchmark experiment was performed at
room temperature (300 K). Forty-one measurement locations exist in the benchmark.

The simulator benchmarks test the adequacy of the transport and dosimetry evaluation techniques, and the underlying nuclear data. The simulator benchmark comparison results demonstrate that, when the configuration of the system is well-known, the level of agreement between RAPTOR-M3G calculations and measurements is within the uncertainties associated with the measurements, themselves. The uncertainty assigned to the calculational methodology from simulator benchmarks is 3%.

This simulator benchmark comparisons contribute to addressing Regulatory Position 1.4.2 of Regulatory Guide 1.190.

Operating Power Reactor Benchmark

In addition to measurements from laboratory-scale simulator benchmark experiments, Regulatory Guide 1.190 recommends that methods qualification should be based on comparisons with measurement data from operating power reactors and comparisons with reference results from calculational benchmark problems.

H. B. Robinson Unit 2 is a Westinghouse 3-loop PWR. As part of the NRC-sponsored LWR Pressure Vessel Surveillance Dosimetry Improvement Program, a comprehensive set of surveillance capsule and ex-vessel neutron dosimetry measurements were performed during Cycle 9. The H. B. Robinson Unit 2 benchmark represents an experimental configuration that is broadly reflective of most operating reactors: data was collected during full-power operation at a commercial LWR; the power distribution and power history data supporting the analysis were derived using methods similar to those employed by most operating LWRs; geometric dimensions specified are nominal dimensions, and not necessarily identical to their as-built configuration. These characteristics make the H. B. Robinson Unit 2 benchmark a compelling data set.

This operating reactor benchmark comparison is used to address Regulatory Position 1.4.2 of Regulatory Guide 1.190.

Calculational Benchmark

The NRC's fluence benchmark is a calculational exercise, developed by Brookhaven National Laboratory at the request of the NRC, which provides reference solutions for typical PWR and Boiling Water Reactor (BWR) pressure vessel fluence calculations. The calculational benchmark does not provide real measurement data, and the methods and data used in the reference results are somewhat dated by contemporary standards. Therefore, results of these evaluations are not used as a direct input to the overall bias and uncertainty assessment for the fluence determination methodology. Nonetheless, the consistency of the RAPTOR-M3G results, both with the reference calculations provided by Brookhaven and the self-consistency demonstrated by the two differencing schemes in RAPTOR-M3G, provides additional confidence that RAPTOR-M3G is correctly applying the discrete ordinates method.

This comparison to the calculational benchmark is used to address Regulatory Position 1.4.2 of Regulatory Guide 1.190.

Criteria 4 - Demonstrates plant-specific qualification by comparison to measured fluence values

Industry Fluence Values

In addition to the uncertainty qualification comparisons, the radiation transport methodology in RAPTOR-M3G has been extensively compared with data from operating power reactors. These comparisons are intended to provide support for the validation of the transport calculation itself as well as validation for the uncertainties assigned to the results of those calculations.

There are 69 in-vessel surveillance capsules with 295 threshold foil measurements from 18 nuclear power plants that have been analyzed with RAPTOR-M3G. In addition to the in-vessel surveillance capsules, 87 ex-vessel neutron dosimetry (EVND) capsules with 454 threshold foil measurements from locations in the reactor cavity opposite the core midplane have been analyzed with RAPTOR-M3G.

These results show that the measured/calculated (M/C) reaction rate ratios for the in-vessel measurements are essentially unbiased and well within the ± 20% acceptance criterion given in Regulatory Guide 1.190. The M/C reaction rate ratios for the ex-vessel measurements are within the ± 30% criterion given in Regulatory Guide 1.190 for the cavity capsules. This operating power reactor comparisons described in this section contribute to addressing Regulatory Position 1.4.2 of Regulatory Guide 1.190.

Waterford 3 Fluence Values

The latest analysis of Waterford Unit 3 surveillance capsule dosimetry is described in detail in WCAP-17969-NP [Reference 8] and WCAP-18002-NP [Reference 9]. These analyses were performed with the RAPTOR-M3G code. The comparison of the calculated results with the available plant specific dosimetry results was used solely to demonstrate the adequacy of the radiation transport calculations and to confirm the uncertainty estimates associated with the analytical results. The comparison was used only as a check and was not used to bias the final calculated neutron fluence results.

Results of the evaluations of the dosimetry from the Waterford Unit 3 surveillance capsules withdrawn to date were used to provide calculations of individual threshold sensor reaction rates which are compared directly with the corresponding measurements. These threshold reaction rate comparisons provide a good evaluation of the accuracy of the fast neutron portion of the calculated energy spectra. For the

individual threshold foils, the average M/C comparisons for fast neutron reactions range from 1.07 to 1.17. The overall average M/C ratio for the entire set of Waterford Unit 3 data is 1.11 with an associated standard deviation of 7.0%. These data comparisons show that the measurements and calculations agree within the 20% criterion specified in Regulatory Guide 1.190. This is the same analysis that was performed for Catawba in WCAP-17669-NP [Reference 11] to validate the RAPTOR-M3G fluence calculations. The Catawba SER specifically pointed out that the M/C comparisons showed that surveillance capsule fluence could be calculated to within 20% of measured values, which satisfied the Reg. Guide 1.190 criterion. The Catawba analysis also used WCAP-16083-NP [Reference 10] which is a generic analysis that is also applicable to Waterford 3. WCAP-16083-NP was referenced in both the Waterford 3 analyses WCAP-17969-NP and WCAP-18002-NP.

Lastly, NEI 96-07 Example 4 question states that the licensee has satisfied the guidelines of Generic Letter (GL) 83-11 Supplement 1. GL 83-11 Supplement 1 provides qualifications for performing safety analysis. The Catawba analysis was performed by Westinghouse in WCAP-16083-NP [Reference 10] and WCAP-17669-NP [Reference 11]. The Waterford 3 analysis was also performed by Westinghouse in WCAP-17969-NP [Reference 8] and WCAP-18002-NP [Reference 9]. Westinghouse performed both analyses and Westinghouse is qualified to perform safety analysis, thus the GL 83-11 Supplement 1 requirements are met.

Conclusion

Based upon the guidance of NEI 96-07, it has been concluded that this change is not a departure from a method of evaluation because it was determined that the method is appropriate for the intended application, the terms and conditions for its use as specified in the SER have been satisfied, and the method has been approved by the NRC. Consistent with the Catawba SER Section 3.2.6.3, this evaluation adequately addressed the Catawba SER four criteria consistent with Regulatory Guide 1.190. Regulatory Guide 1.190 was developed to provide state-of-the-art calculations and measurement procedures that are acceptable to the NRC staff for determining pressure vessel fluence. Since RAPTOR-M3G was approved for Catawba and Waterford 3 met all the conditions outlined in the Catawba SER, this method of evaluation is acceptable with respect to the use of the RAPTOR-M3G as a neutron fluence calculation at Waterford 3.

If any of the above questions is checked "Yes," obtain NRC approval prior to implementing the change by initiating a change to the Operating License in accordance with NMM Procedure EN-LI-103.

I. OVERVIEW / SIGNATURES[1]

Facility: Waterford 3 **Evaluation # / Rev. #:** 17-02 / 0

Proposed Change / Document: EC 68581, Evaluation of Reactor Vessel Surveillance and Current License Basis

Description of Change: EC 68581 will incorporate the ASME Section III, Subarticle NB-2331 fracture toughness methods into the design and licensing basis. WCAP-18002-NP utilized existing unirradiated Charpy V-Notch test data for transverse specimens (WR direction) to establish new unirradiated reference nil-ductility temperatures (RT_{NDT}) for the reactor beltline plate materials in accordance with ASME Section III Subarticle NB-2331.

Summary of Evaluation:
The design function of the WF3 reactor vessel as described in the UFSAR is to structurally support the reactor core, maintain the reactor coolant pressure boundary, and provide a barrier to radiological release under design basis conditions.

The fracture toughness properties (initial RT_{NDT} and initial Upper-Shelf Energy) of the beltline plate materials were originally determined using Branch Technical Position (BTP) MTEB 5-2. Although the licensing basis (historical) values made use of BTP MTEB 5-2 and longitudinal test data, it is noted that transverse data and drop-weight data are available for the nine Waterford Unit 3 reactor vessel plates. The transverse data as well as drop-weight data from Certified Material Test Reports (CMTRs) and original test records have been used to re-evaluate the initial fracture toughness properties. The method prescribed in Subarticle NB-2331 of Section III of the ASME Code (Reference 9) was used to determine the initial RT_{NDT} values for each of the nine reactor vessel plates. A hyperbolic-tangent curve fitting program was utilized in some instances to fit the minimum Charpy V-notch data points as prescribed in Paragraph (4) of NB-2331. The initial Upper-Shelf Energy (USE) values were determined using the methodology described in ASTM E185-82. All Charpy V-notch data points that achieved 95% or greater shear were averaged to determine the initial USE values. Therefore, the initial RT_{NDT} and initial USE values for the Waterford Unit 3 plate materials no longer utilize BTP 5-3 as their determination methodology.

Question 8 specifically addressed the proposed change and associated impacts. Based upon the guidance of NEI 96-07, it has been concluded that this change is not a departure from a method of evaluation because it was determined that the method is appropriate for the intended application and the method has been approved by the NRC.

References

1. Waterford 3 Technical Specification through Amendment 249.
2. Waterford 3 Updated Final Safety Analysis Report through Amendment 309.
3. NRC Regulatory Guide 1.187, Guidance for Implementation of 10CFR50.59 Changes, Tests, and Experiments, November 2000.
4. NEI 96-07 Revision 1, Guidelines for 10 CFR 50.59 Evaluations, November 2000.
5. Westinghouse Report WCAP-17969-NP Revision 0, Analysis of Capsule 83° from the Entergy Operations, Inc. Waterford Unit 3 Reactor Vessel Radiation Surveillance Program, April 2015.
6. Westinghouse Report WCAP-18002-NP, Waterford Unit 3 Time Limited Aging Analysis on Reactor Vessel Integrity, July 2015.

[1] Signatures may be obtained via electronic processes (e.g., PCRS, ER processes), manual methods (e.g., ink signature), e-mail, or telecommunication. If using an e-mail or telecommunication, attach it to this form.

7. Regulatory Guide 1.99 Revision 2, "Radiation Embrittlement of Reactor Vessel Materials, May 1988.
8. Code of Federal Regulations, 10 CFR Part 50, Appendix G, Fracture Toughness Requirements, U.S. Nuclear Regulatory Commission, Washington, D.C., Federal Register, Volume 60, No. 243, dated December 19, 1995.
9. ASME Boiler and Pressure Vessel (B&PV) Code ASME Section III.
10. NUREG-0800 Section 5.3.2 Revision 1, Pressure-Temperature Limits, July 1981.
11. NUREG-0800 Section 5.3.2 Revision 2, Pressure-Temperature Limits, March 2007.

Is the validity of this Evaluation dependent on any other change? ☐ **Yes** ☒ **No**

If "Yes," list the required changes/submittals. The changes covered by this 50.59 Evaluation cannot be implemented without approval of the other identified changes (e.g., license amendment request). Establish an appropriate notification mechanism to ensure this action is completed.

Based on the results of this 50.59 Evaluation, does the proposed change require prior NRC approval? ☐ **Yes** ☒ **No**

Preparer: William Steelman / See Associated EC 68581 / SMI / Engineering / See EC
Name (print) / Signature / Company / Department / Date

Reviewer: Jason Laque / See Associated EC 68581 / SMI / Engineering / See EC
Name (print) / Signature / Company / Department / Date

OSRC: Ran Gilmore / See Associated EC 68581 / See EC
Chairman's Name (print) / Signature / Date

17-03
OSRC Meeting #

II. 50.59 EVALUATION

Does the proposed Change being evaluated represent a change to a method of evaluation ONLY? If "Yes," Questions 1 – 7 are not applicable; answer only Question 8. If "No," answer all questions below.

☒ Yes
☐ No

Does the proposed Change:

1. Result in more than a minimal increase in the frequency of occurrence of an accident previously evaluated in the UFSAR?

☐ Yes
☐ No

BASIS:

2. Result in more than a minimal increase in the likelihood of occurrence of a malfunction of a structure, system, or component important to safety previously evaluated in the UFSAR?

☐ Yes
☐ No

BASIS:

3. Result in more than a minimal increase in the consequences of an accident previously evaluated in the UFSAR?

☐ Yes
☐ No

BASIS:

4. Result in more than a minimal increase in the consequences of a malfunction of a structure, system, or component important to safety previously evaluated in the UFSAR?

☐ Yes
☐ No

BASIS:

5. Create a possibility for an accident of a different type than any previously evaluated in the UFSAR?

☐ Yes
☐ No

BASIS:

6. Create a possibility for a malfunction of a structure, system, or component important to safety with a different result than any previously evaluated in the UFSAR?

☐ Yes
☐ No

BASIS:

7. Result in a design basis limit for a fission product barrier as described in the UFSAR being exceeded or altered?

☐ Yes
☐ No

BASIS:

8. Result in a departure from a method of evaluation described in the UFSAR used in establishing the design bases or in the safety analyses? ☐ Yes ☒ No

BASIS:

EC 68581 will incorporate the ASME Section III Subarticle NB-2331 [Reference 9] fracture toughness method of evaluation into the design and licensing basis. The purpose of the initial RT_{NDT} calculation is to use vessel-specific material test data to determine a baseline fracture toughness property for each plate, weld, and forging used to fabricate the reactor vessel. This makes it possible to compare experimental and theoretical fracture toughness data after neutron irradiation of the vessel to the baseline to determine the extent of ductility loss.

Waterford 3 vessel materials were ordered to Summer 1971 ASME Code requirements which did not specify a method for calculating RT_{NDT} or require the breadth of fracture toughness testing of the summer 1972 addenda. To address this issue that was common among older plants, the NRC developed NUREG-0800 Branch Technical Position (BTP) MTEB 5-2 [Reference 10] which included estimates to correlate typically available material test data sets with the RT_{NDT} methodology in the code. Waterford 3 adopted the BTP MTEB 5-2 methods for calculating RT_{NDT} based on longitudinal Charpy tests for the vessel plates. Westinghouse WCAP-18002-NP [Reference 6] work discovered transverse-oriented Charpy test data that was previously unused. This allowed RT_{NDT} to be calculated using the ASME Code NB-2331 methods rather than BTP MTEB 5-2. The ASME Code method is required by 10CFR50 Appendix G [Reference 8], NUREG-0800 [Reference 10], and Regulatory Guide 1.99 [Reference 7].

NRC Regulatory Guide 1.187 [Reference 3] provides guidance on complying with the revised requirements of 10CFR50.59. Regulatory Guide 1.187 endorses NEI 96-07 Revision 1 [Reference 4] as providing methods that are acceptable to the NRC staff for complying with the provisions of 10 CFR 50.59. NEI 96-07 Section 3.10 states that methods of evaluation means the calculational framework used for evaluating behavior or response of the facility or a structure, system or component. NEI 96-07 Section 3.10 specifically gives as an example the ASME III and Appendix G methods for evaluating reactor vessel embrittlement specimens as methods of evaluation.

BTP MTEB 5-2 and ASME Section III Subarticle NB-2331 are both methods of evaluation as defined by NEI 96-07 Section 3.10.

NEI 96-07 Section 3.4 defines departure from a method of evaluation as follows:

> Departure from a method of evaluation described in the FSAR (as updated) means (i) changing any of the elements of the method described in the FSAR (as updated) unless the results of the analysis are conservative or essentially the same; or (ii) changing from a method described in the FSAR to another method unless that method has been approved by NRC for the intended application.

NEI 96-07 Section 3.4 provides a discussion of ways to change the method of evaluation that are allowable. One way is that the method of evaluation is approved by the NRC for the intended application.

> "Approved by the NRC for the Intended Application"
> Rather than make a minor change to an existing method of evaluation, a licensee may also adopt completely new methodology without prior NRC approval provided the new method is approved by the NRC for the intended application. A new method is "approved by the NRC for the intended application" if it is approved for the type of analysis being conducted and the licensee satisfies applicable terms and conditions for

its use. Specific guidance for making this determination is provided in Section 4.3.8.2.

NEI 96-07 Section 4.3.8.2 allows the use of a new method of evaluation if it has been approved by the NRC. ASME Section III Subarticle NB-2331 has been specifically approved by the NRC for this use by several sources.
10CFR50 Appendix G Section II.D(i) states the following:

> For the pre-service or unirradiated condition, RT_{NDT} is evaluated according to the procedures in the ASME Code, Paragraph NB-2331.

Regulatory Guide 1.99 Section 1.1 (Adjusted Reference Temperature) states the following:

> Initial RT_{NDT} is the reference temperature for the unirradiated material as defined in Paragraph NB-2331 of Section III of the ASME Boiler and Pressure Vessel Code.

NUREG-0800 Section 5.3.2.III.3.A.ii [Reference 11] states the following:

> For preservice hydrostatic testing curves, this determination shall be based on the initial material properties for each material determined in accordance with ASME Code, Section III, NB-2331 or BTP 5-3.

The NRC has explicitly approved ASME Section III Subarticle NB-2331 for this application. Westinghouse WCAP-18002-NP use of ASME Section III Subarticle NB-2331 for the Waterford 3 plate materials is appropriate for the intended application. The ASME Section III Subarticle NB-2331 was followed in WCAP-18002-NP. Thus, there is no departure for a method of evaluation described in the UFSAR.

If any of the above questions is checked "Yes," obtain NRC approval prior to implementing the change by initiating a change to the Operating License in accordance with NMM Procedure EN-LI-103.

I. OVERVIEW / SIGNATURES[1]

Facility: Waterford 3 SES **Evaluation # / Rev. #:** 2017-03 Rev. 0

Proposed Change / Document:
EC 62939 - Update Specifications 1564.467 and 1564.468 to accept Drillco Maxi-Bolt undercut anchors, add Regulatory Guide (RG) 1.199 to UFSAR Chapter 1.8, add a description of how to use code ACI 349-01 Appendix B to UFSAR Chapter 3.8, and issue calculation ECC17-001.

Description of Change:

EC 62939 will add a description to WF3 specifications 1564.467 and 1564.468 of the anchor allowables, and installation instructions for using Drillco Maxi-Bolt undercut anchors. This EC will also add NRC Regulatory Guide 1.199 to UFSAR Chapter 1.8, since the Regulatory Guide approves a new design methodology that can be used for these Maxi-Bolts. EC 62939 will also add information to UFSAR Chapter 3.8 concerning the NRC endorsement of ACI 349-01 Appendix B for post-installed anchors.

A new design methodology called Concrete Capacity methodology (CC) will be utilized if the Drillco Maxi-Bolt anchors cannot be installed per the spacing and edge distance requirements in specifications 1564.467 and 1564.468.

Summary of Evaluation:
Per UFSAR Section 3.8.3.2.1, concrete at Waterford 3 (WF3) is designed using the Ultimate Strength Design in ACI 318-63, "Building Code Requirements for Reinforced Concrete" with ACI 318-71 used for design of reinforcing steel splices. EC 62939 is requesting a change to be able to use ACI 349-01, Appendix B, "Anchoring to Concrete", for post-installed anchors. ACI 349-01 Appendix B utilizes a new design methodology called Concrete Capacity methodology (CC), which is not included in the current WF3 design basis. Anchorage for post-installed anchors such as the Hilti Kwik Bolt is based on the strength of the friction interface between the post-installed wedge and the concrete around the anchor. The Drillco Maxi-Bolts use an undercut that is made at the bearing depth of the anchor. The capacity of the Maxi-bolt is based on the bearing of the expanded bolt on this undercut surface.

WF3 is able to use the Drillco Maxi-Bolts using allowable values based on extensive testing done by Drillco. A significant portion of this testing was done at the Arkansas Nuclear One plant during the 1990's. The allowables provided by Drillco also include minimum Maxi-Bolt spacing, minimum edge distance requirements, and specified undercut depth requirements.. As long as the Maxi-Bolts can be installed so they meet these requirements, the Drillco allowable strengths can be used. However, if the bolts cannot be installed per these requirements, the strength of the concrete-bolt connection can be determined using the CC method from ACI 349-01, Appendix B. This new CC methodology as described in ACI 349-01 is endorsed by the NRC in Reg. Guide 1.199. WF3 will use this new methodology including all of the restrictions defined by the NRC in the Reg. Guide. WF3 will use the original load factors for concrete design since they are higher than the load factors in ACI 349-01 and supplemented in Reg. Guide 1.199.

Question 8 specifically addresses the proposed change and associated impacts. Based upon the guidance of NEI 96-07, it has been concluded that this change is not a departure from a method of evaluation because it was determined that the method is appropriate for the intended application and the method has been approved by the NRC.

References

1. Waterford 3 Updated Final Safety Analysis Report through Amendment 309.
2. NRC Regulatory Guide 1.187, Guidance for Implementation of 10CFR50.59 Changes, Tests, and Experiments, November 2000.
3. NRC Regulatory Guide 1.199, Anchoring Components and Structural Supports in Concrete, November 2003.

[1] Signatures may be obtained via electronic processes (e.g., PCRS, ER processes), manual methods (e.g., ink signature), e-mail, or telecommunication. If using an e-mail or telecommunication, attach it to this form.

4. NEI 96-07 Revision 1, Guidelines for 10 CFR 50.59 Evaluations, November 2000.
5. American Concrete Institute (ACI) Standard 318-63, Building Code Requirements for Reinforced Concrete, June 1963.
6. ACI Standard 349-01, Code Requirements for Nuclear Safety Related Concrete Structures, February 2001.
7. American Concrete Institute (ACI) Standard 318-71, Building Code Requirements for Reinforced Concrete, 1971.
8. Enforcement Bulletin (IEB) 79-02
9. NUREG-0800 Revision 2, Section 3.8.3, Concrete and Steel Internal Structures of Steel or Concrete Containments. March 2007.
10. ASTM E488-96, "Standard Test Methods for Strength of Anchors in Concrete and Masonry Elements"
11. ACI 355.2-01, "Evaluating the Performance of Post-Installed Mechanical Anchors in Concrete"
12. Waterford 3 Specification 1564.467, Revision 004, "Drilled In Expansion Type Anchors in Concrete for Non Seismic Systems"
13. Waterford 3 Specification 1564.468, Revision 007, "Drilled In Expansion Type Anchors in Concrete for Category I Structures Seismic Class I"
14. Entergy Procedure EN-DC-150, Revision 12, "Condition Monitoring of Maintenance Rule Structures"
15. Entergy Quality Assurance Program Manual, Revision 31
16. Entergy Nuclear Procedure EN-DC-115, Revision 20, "Engineering Change Process"

Is the validity of this Evaluation dependent on any other change? ☐ **Yes** ☒ **No**

If "Yes," list the required changes/submittals. The changes covered by this 50.59 Evaluation cannot be implemented without approval of the other identified changes (e.g., license amendment request). Establish an appropriate notification mechanism to ensure this action is completed.

Based on the results of this 50.59 Evaluation, does the proposed change require prior NRC approval? ☐ **Yes** ☒ **No**

Preparer: Gregory N. Ferguson/ See AS – EC 62939 / SMI / Projects / 3-22-17
Name (print) / Signature / Company / Department / Date

Reviewer: William Steelman /See AS - EC62939 / SMI / Engineering / 3-22-17
Name (print) / Signature / Company / Department / Date

OSRC: R. Gilmore (OSRC) / See AS – EC62939 / 3-27-17
Chairman's Name (print) / Signature / Date

W3 17-06
OSRC Meeting #

II. 50.59 EVALUATION

Does the proposed Change being evaluated represent a change to a method of evaluation ONLY? If "Yes," Questions 1 – 7 are not applicable; answer only Question 8. If "No," answer all questions below.

☒ Yes
☐ No

Does the proposed Change:

1. Result in more than a minimal increase in the frequency of occurrence of an accident previously evaluated in the UFSAR? ☐ Yes ☐ No

   BASIS:

2. Result in more than a minimal increase in the likelihood of occurrence of a malfunction of a structure, system, or component important to safety previously evaluated in the UFSAR? ☐ Yes ☐ No

   BASIS:

3. Result in more than a minimal increase in the consequences of an accident previously evaluated in the UFSAR? ☐ Yes ☐ No

   BASIS:

4. Result in more than a minimal increase in the consequences of a malfunction of a structure, system, or component important to safety previously evaluated in the UFSAR? ☐ Yes ☐ No

   BASIS:

5. Create a possibility for an accident of a different type than any previously evaluated in the UFSAR? ☐ Yes ☐ No

   BASIS:

6. Create a possibility for a malfunction of a structure, system, or component important to safety with a different result than any previously evaluated in the UFSAR? ☐ Yes ☐ No

   BASIS:

7. Result in a design basis limit for a fission product barrier as described in the UFSAR being exceeded or altered? ☐ Yes ☐ No

   BASIS:

8. Result in a departure from a method of evaluation described in the UFSAR used in establishing the design bases or in the safety analyses? ☐ Yes ☒ No

   BASIS:

   Concrete at Waterford 3 (WF3) is designed using the Ultimate Strength Design in ACI 318-63 [Reference 5], "Building Code Requirements for Reinforced Concrete" with ACI 318-71 [Reference 7] used for design of reinforcing steel splices per UFSAR Section 3.8.3.2.1. The design methodology for post-installation anchor bolts is not described in the UFSAR. EC 62939 is requesting a change to utilize ACI 349-01 [Reference 6], Appendix B, "Anchoring to Concrete", for post-installed anchors. ACI 349-01 Appendix B utilizes a new design methodology called Concrete Capacity (CC) methodology, which is not included in the current WF3 design basis for concrete design. This new CC methodology has been endorsed by the NRC for the design of both anchor bolts and the surrounding concrete in Regulatory Guide 1.199 [Reference 3], but with exceptions in the area of load factors. WF3 will use the load factors from ACI 318-63, which are higher (more conservative) than the load factors in ACI 349-01 Appendix B and in Reg. Guide 1.199.

   EC 62939 justifies the use of Drillco Maxi-Bolt undercut anchors as post-installed anchors at WF3. Part of this justification will be to add ACI 349-01 Appendix B as an approved standard for designing anchorage in concrete. The current concrete standards (ACI 318-63 and ACI 318-71) considered in the licensing basis for WF3 do not include anchorage design for post-installation anchors.

Post-installed anchorage has been an area of concern for the NRC and the nuclear industry since the 1970's. Structural failure of pipe supports and questions concerning the performance of expansion anchor bolts led to NRC Inspection and Enforcement Bulletin (IEB) 79-02 [Reference 8]. The concerns raised by this IEB were resolved at WF3 by limiting anchor bolts in safety related or seismic installations to the wedge anchors similar to Hilti Kwik-Bolts. Also, as specified in IEB 79-02, wedge anchors require a factor of safety of 4. Shell-type anchors, such as Hilti Drop-In anchors, require a factor of safety of 5.

To resolve some of these anchorage issues, the ACI 349 code committee issued Appendix B to ACI 349 in 1980. Due to questions on testing and the design methodology presented in the 1980 revision, extensive testing was performed after issuance of the 1980 code. Some of this research resulted in the development of a new design methodology called the Concrete Capacity or "CC-Method". The ACI 349 committee issued a revision to ACI 349 in 2001, including Appendix B, which was based, in part, on the CC-Method.

NRC Regulatory Guide 1.187 [Reference 2] provides guidance on complying with the revised requirements of 10CFR50.59. Regulatory Guide 1.187 endorses NEI 96-07 Revision 1 [Reference 4] as providing methods that are acceptable to the NRC staff for complying with the provisions of 10 CFR 50.59. NEI 96-07 Section 3.10 states that methods of evaluation means the calculational framework used for evaluating behavior or response of the facility or a structure, system or component. ACI 318-63 Ultimate Strength Design and the Concrete Capacity method as shown in ACI 349-01 are both methods of evaluation as defined by NEI 96-07 Section 3.10.

NEI 96-07 Section 3.4 defines departure from a method of evaluation as follows:

> "Departure from a method of evaluation described in the FSAR (as updated) means (i) changing any of the elements of the method described in the FSAR (as updated) unless the results of the analysis are conservative or essentially the same; or (ii) changing from a method described in the FSAR to another method unless that method has been approved by NRC for the intended application."

NEI 96-07 Section 3.4 provides a discussion of ways to change the method of evaluation that are allowable. One way is that the method of evaluation is approved by the NRC for the intended application.

> "Approved by the NRC for the Intended Application"
>
> "Rather than make a minor change to an existing method of evaluation, a licensee may also adopt completely new methodology without prior NRC approval provided the new method is approved by the NRC for the intended application. A new method is "approved by the NRC for the intended application" if it is approved for the type of analysis being conducted and the licensee satisfies applicable terms and conditions for its use. Specific guidance for making this determination is provided in Section 4.3.8.2."

Regulatory Guide 1.199 Section A (Introduction) explicitly states the following:

> This regulatory guide is being issued to provide guidance to licensees and applicants on methods acceptable to the NRC staff for complying with the NRC'S regulations in the design, evaluation, and quality assurance of anchors (steel embedments) used for component and structural supports on concrete structures.

This means that Regulatory Guide 1.199 provides an NRC approved method for this application. The 50.59 process requires that all the applicable terms and conditions for use be met. Each of the Regulatory Guide 1.199 positions is addressed below to validate compliance with these requirements.

Regulatory Guide 1.199 Position 1: "The procedures and standards of Appendix B to ACI 349-01 are acceptable to the NRC staff as described and supplemented below. The recommendations are applicable to the types of anchors discussed in Section B.1, "Definitions," and B.2, "Scope," of Appendix B to ACI 349-01."

Response: Regulatory Guide 1.199 Position 1 is met by complying with ACI 349-01 Appendix B.

Regulatory Guide 1.199 Position 1.1: "The notations and definitions given in Sections B.0 and B.1 of Appendix B to ACI 349-01 are acceptable to the NRC staff. The position on grouted

anchors is in Regulatory Position 1.7."

Response: For Regulatory Guide Position 1.1, some of the notations are used in Waterford 3 design documents with different names or symbols, but the definition is the same.

Regulatory Guide 1.199 Position 1.2: "The position on load combinations is given in Regulatory Position 1.3. In addition to the guidance of Section B.3.3 of Appendix B, the testing recommendations defined in ASTM E488-96, "Standard Test Methods for Strength of Anchors in Concrete and Masonry Elements," are acceptable to the NRC staff as a guide for establishing a testing program. Test methods not covered by ASTM E488-96 (e.g., combined tension and shear, cracked concrete) should be established and executed using good engineering judgment. ACI 355.2-01, "Evaluating the Performance of Post-Installed Mechanical Anchors in Concrete," provides guidance acceptable to the NRC staff for determining whether post-installed mechanical anchors are acceptable for use in uncracked as well as cracked concrete. For materials consideration, the NRC staff recommends that anchors be fabricated using a material that is compatible with the environment in which they will be installed."

Response: Testing done by Drillco in 2004 documents testing done on the Maxi-Bolt anchors that was done in accordance with ASTM E488-96 and ACI 355.2-01. Extensive testing on these Drillco Maxi-Bolt anchors was also performed in the 1990's at Entergy's Arkansas Nuclear One site. Hundreds of other tests have been performed on Drillco Maxi-Bolt anchors for other nuclear plants. These have been done from the 1980's into the 2000's. The recommendation for materials is that any anchors that are installed need to be fabricated using a material that is compatible with the environment in which they will be installed. This is accomplished by the markups to specifications 1564.467 (Reference 12) "Specification Drilled-In Expansion Type Anchors in Concrete for Non-Seismic Systems," and 1564.468 (Reference 13) "Specification Drilled-In Expansion Type Anchors in concrete for Category I Structures". Each of these shows the anchors can be ASTM A36, ASTM A193 B7, or ASTM A193 B8. The choice of material will be determined by the field conditions where the anchor is to be installed.

Regulatory Guide 1.199 Position 1.3: "The load factors used in Section 9.2.1 of ACI 349-01 are acceptable to the NRC staff except for the following:

1.3.1 In load combinations 9, 10, and 11, $1.2T_o$ should be used in place of $1.05T_o$.

1.3.2 In load combination 6, 1.4 P_a should be used in place of $1.25P_a$.

1.3.3 In load combination 7, 1.25 P_a should be used in place of $1.15P_a$.

1.3.4 The NRC staff endorses Section B.4, "General Requirements for Strength of Structural Anchors, of ACI 349-01. The NRC staff endorses the strength reduction factors given in Section B.4.4; however, load factors consistent with SRP Section 3.8.4, "Other Seismic Category I Structures," should be applied to the load combinations given in Section 9.2 of ACI 349-01."

Response: Regulatory Guide 1.199 Position 1.3 is met using the load factors and strength reductions factors as shown in the Waterford 3 UFSAR. ACI 349-01 uses load factors different than the ones described in the Waterford 3 design basis. However, the load factors in the existing Waterford 3 UFSAR Chapter 3.8 and ACI 318-63 are more conservative than the ones provided in ACI 349-01 and in Reg. Guide 1.199. Therefore, the more conservative original load factors will be used instead of the ones described in Position 1.3.1, 1.3.2, and 1.3.3. A comparison of the strength reduction factors (ϕ) between ACI 349-01 and ACI 318-63 (the design standard required for Waterford 3) show that the ACI 349-01 values are the same as the ones from the ACI 318-63 code. Therefore, WF3 will continue to use the strength reduction factors (ϕ) from ACI 318-63.

Regulatory Guide 1.199 Position 1.4: "The design standards given in Sections B.5, "Design Requirements for Tensile Loading," and B.6, "Design Requirements for Shear Forces," are

acceptable to the staff."

Response: Regulatory Guide 1.199 Position 1.4 will be met for any Drillco Maxi-Bolts that have to be installed and cannot meet the installation requirements based on the anchor bolt testing that was performed. The instructions in calculation ECC17-001 on determining Maxi-Bolt capacities follow the steps given in ACI 349-01 Sections B.5, "Design Requirements for Tensile Loading," and B.6, "Design Requirements for Shear Forces.

Regulatory Guide 1.199 Position 1.5: "The design standards given in Sections B.7, "Interaction of Tensile and Shear Forces," and B.8, "Required Edge Distances, Spacing, and Thickness to Preclude Splitting Failure," are acceptable to the NRC staff."

Response: Regulatory Guide 1.199 Position 1.5 is met as calculation ECC17-001 documents the requirements for the shear-tension interaction in ACI 349-01 Section B.7. For the requirements of ACI 349-01 Section B.8, "Required Edge Distances, Spacing, and Thickness to Preclude Splitting Failure," the calculation ECC17-001 requires these checks to be performed.

Regulatory Guide 1.199 Position 1.6: "Section B.9, "Installation of Anchors," is acceptable to the NRC staff. Checks to be considered in the installation of expansion anchor bolts are:

- Hole diameter is correct
- Embedment depth is proper
- Drill hole angularity is within established limits
- Edge distance and spacing of anchors are to specified values
- Anchor is threaded properly
- Plate thickness meets specified size and thickness values
- Plate bolt-hole size is within established limits
- Anchor has been correctly preloaded
- Correct bolt diameter and length are used
- Bolt hole has been cleared of drill dust
- Concrete is sound (free of voids)
- Grout has been mixed and installed to specifications."

Response: Regulatory Guide 1.199 Position 1.6 is met since the checks described by the NRC are added to the Waterford 3 specifications 1564.467, "Specification Drilled-In Expansion Type Anchors in Concrete for Non-Seismic Systems," and 1564.468, "Specification Drilled-In Expansion Type Anchors in concrete for Category I Structures".

Regulatory Guide 1.199 Position 1.7: "The design standards given in Sections B.10, "Structural Plates, Shapes, and Specialty Inserts," and B.11, "Shear Capacity of Embedded Plates and Shear Lugs," are acceptable to the NRC staff. When grouting is the only option, it is recommended that tests be performed in accordance with Sections B.12.3 and B.12.4 of Appendix B."

Response: Regulatory Guide 1.199 Position 1.7 applies to steel that is embedded in concrete. This does not apply to Drillco Maxi-Bolts as they are post-installation anchors. The current Waterford 3 design basis for embedded materials is not being changed. The original licensing criteria for Waterford 3 will remain in place.

Regulatory Guide 1.199 Position 2: "All anchors should be inspected to verify that they are of the specified size and type. Installation standards should be consistent with accepted industry-specified tolerances. Anchor systems that are external (that part or portion of the anchor that is not embedded in concrete-visible part) to the concrete surface should be inspected to assure adequate performance during the lift of the structure. In addition to the provisions in Section B.9.2 of Appendix B, the NRC staff recommends the following post-installed 6-step inspection program to verify the proper installation of post-installed anchors.

- 2.1. Are the nut and anchor bolt tight?
- 2.2. Are there washers between the equipment base and the anchor bolt nut or bolt head?

- 2.3. Is the bolt spacing in accordance with the anchorage design?
- 2.4. Is the distance between the bolt and any free concrete surface in accordance with the anchorage design (edge condition)?
- 2.5. Is the concrete sound and uncracked?
- 2.6. Is there a significant gap between the equipment base and the concrete surface?"

Response: Regulatory Guide 1.199 Position 2 is met at Waterford 3 since the installation of all anchor bolts is controlled by Waterford 3 specifications and procedures. In addition, Waterford 3 does perform periodic walkdowns to identify instances where there could be deterioration of the concrete or steel surfaces.

Regulatory Guide 1.199 Position 2.1-2.6 are met as walkdowns are performed throughout accessible areas of the plant every 5 years for High Risk Significant structures and 10 years for Low Risk Significant structures. These walkdowns are required by fleet procedure EN-DC-150 (Reference 14), "Condition Monitoring of Maintenance Rule Structures". These walkdowns will visually inspect equipment throughout the plant, including the condition of anchorage as described in Regulatory Guide 1.199 steps 2.1 through 2.6. If there are concerns on the nut and anchor bolt being tight, a torque wrench could be used to check.

Regulatory Guide 1.199 Position 3: All quality assurance standards of ASME NQA-2,1983, "Quality Assurance Program Requirements for Nuclear Facilities," are applicable to load-bearing steel embedments and other load-bearing components of component and structural supports."

Response: Regulatory Guide 1.199 Position 3 is met with the Entergy Quality Assurance Program Manual, Revision 31 (Reference 15).

Regulatory Guide 1.199 Position 4: "The concrete constituents and embedded materials should be compatible with the anticipated environmental conditions to which they will be subjected during the life of the plant."

Response: Regulatory Guide 1.199 Position 4 is met by the Engineering Change process at Waterford 3 using Procedure EN-DC-115 (Reference 16). The environmental conditions are included in the design stage of any modifications.

Regulatory Guide 1.199 Position 5: "Loads and forces on embedments should be properly evaluated to account for baseplate flexibility and eccentricity of connections and the dynamic (strain rate and low-cycle fatigue) effects of loads and forces."

Response: Regulatory Guide 1.199 Position 5 is met by the Engineering Change process at Waterford 3 using Procedure EN-DC-115 (Reference 16). All loads and forces on embedments are evaluated as part of the modification process.

Regulatory Guide 1.199 Position 6: "The hardness, materials, and heat treatment of high-strength anchor bolts and studs (F_y > 110 ksi) should be carefully controlled to prevent environmental and stress-corrosion cracking."

Response: Regulatory Guide 1.199 Position 6 is met by restricting the materials included in the specification changes to a yield strength less than 110 ksi.

Regulatory Guide 1.199 Position 7: "Because anchors are not generally specified for masonry, the NRC staff does not recommend the use of any type of anchor discussed in this guide to attach Seismic Category I components or systems to concrete block walls that are seismically qualified, except for extremely low load applications. In locations where it is impossible to avoid the use of anchors, users should verify through appropriate means (e.g., pull test) that the supports are structurally adequate."

Response: Regulatory Guide 1.199 Position 7 is met since, as described in the Waterford 3 UFSAR Section 3.8.4.8 (Reference 1), no safety related piping systems or equipment is supported directly or indirectly from masonry walls.

NEI 96-07 Section 4.3.8.2 allows the use of a new method of evaluation if it has been approved by the

NRC. ACI 349-01 Appendix B that utilizes the Concrete Capacity method has been endorsed by the NRC in Regulatory Guide 1.199. In Section D, Implementation, of Regulatory Guide 1.199, the NRC states "Current licensees may, at their option, comply with the guidance in this regulatory guide."

The NRC has explicitly approved ACI 349-01 Appendix B. The testing performed for the Drillco Maxi-Bolts meets the requirements as stated in Regulatory Guide 1.199. The use of these anchor bolts as designed by ACI 349-01 Appendix B is appropriate for the intended application. Therefore, there is no departure for a method of evaluation as described in the UFSAR.

If any of the above questions is checked "Yes," obtain NRC approval prior to implementing the change by initiating a change to the Operating License in accordance with NMM Procedure EN-LI-103.

I. OVERVIEW / SIGNATURES[1]

Facility: Waterford 3 **Evaluation # / Rev. #:** 17-4 / 0

Proposed Change / Document: EC64801 Emergency Feedwater Logic Modification

Description of Change: EC64801 (Emergency Feedwater Logic Modification) resolves the adverse condition identified in CR-WF3-2015-3565. CR-WF3-2015-3565 identified that after a reactor trip with loss of feedwater, the emergency feedwater flow to the steam generator began to oscillate between 250 – 800 gpm at approximately 45% WR level. Operations took manual control of the emergency feedwater system to stabilize flow. The CR-WF3-2015-3565 Root Cause Analysis concluded that the flow oscillations were due to the interaction between the steam generator process configuration and calibration settings which created a hysteresis in the PAC system and caused the control system to become unstable.

The Emergency Feedwater (EFW) control system logic is described in UFSAR Section 7.3.1.1.6. The EFW control valve logic will be modified such that the Safety Injection Actuation Signal (SIAS) signal will be permanently actuated in the EFW system controls which causes the EFW control system to automatically perform the steam generator level control mode of operation. The flow control mode will no longer be utilized.

The EFW logic modification is limited to internal panel wiring de-terminations and card modification/removal. The EFW logic instrumentation will remain safety related, seismically qualified, and independent. The specific changes are as follows.

- Cards SGILCB1115A2 (NCB) and SGILRC1115A1 (NRC) are removed from PAC Panel LCP-61. Cards SGILCB1125B2 (NCB) and SGILRC1125B1 (NRC) are removed from PAC Panel LCP-62.
- The existing "NDI" PAC card's inverter switch (1 for each valve) is repositioned from the Open position to the Closed position. This will supply a constant logic high signal to the EFW controller card and force the system to operate in the SIAS mode at all times. This design allows the associated NDI relay to operate in a normally de-energized state as it does in the current design.
- Wiring determinations to support these changes.
- Steam generator lo-lo level annunciator alarms are being removed.

The table below shows a summary of the current to modified logic associated with this change. This is the **normal** actuation sequence for the logic with no safety injection actuation signal (SIAS) present. The modified configuration actuates the EFW control valves at 55% WR steam generator level as discussed in the table below.

Control Logic Description	Current Configuration	Modified Configuration
Emergency Feedwater Actuation Signal	Actuated at 27.4% NR Emergency feedwater pumps start, block valves open and control valves remain shut.	No change. This part of the control system is not impacted.
Steam Generator Critical Level	Actuated at 55% WR Control valves open to provide 200 gpm flow to each steam	Flow control mode of operation is eliminated and control valves go immediately to level control

[1] Signatures may be obtained via electronic processes (e.g., PCRS, ER processes), manual methods (e.g., ink signature), e-mail, or telecommunication. If using an e-mail or telecommunication, attach it to this form.

Control Logic Description	Current Configuration	Modified Configuration
	generator.	mode and open fully. Primary flow control valve will maintain steam generator level at 85% WR and the backup flow control valve will maintain 82% WR.
Steam Generator Lo Level	Actuated at 45% WR Control valves open to provide 400 gpm flow to each steam generator.	Removed from the system. Steam generator critical level actuation makes this level no longer necessary.
Steam Generator Lo-Lo Level	Actuated at 36.3% WR Control valves go wide open providing full flow to each steam generator. This provides the priority open function. Priority open function resets at the SG lo level.	Removed from the system. Steam generator critical level actuation makes this level no longer necessary.
Safety Injection Actuation Signal	With a safety injection actuation signal, when the steam generator level lowered to the critical level (55% WR), the control valves would go to level control mode and open fully.	Safety injection actuation signal is permanently actuated in the logic.
Main Steam Isolation Signal (Steam Generator pressure differential)	With a main steam isolation signal present, the emergency feedwater system actuates a priority close signal until a steam generator pressure differential is obtained to allow feeding the unaffected steam generator.	No change. This part of the control system is not impacted.
Diverse Emergency Feedwater System	Actuated at 55% WR. EFW pumps and valves follow the EFAS scheme.	No change to block valves or pumps actuation. The EFW control valves will follow the new EFAS scheme.
Control Board Manual Control	Manual EFAS/DEFAS initiation and reset. Manual control of pumps and control valves.	No change. This part of the control system is not impacted. Note – priority open will no longer override manual operation.
Steam Generator Lo-Lo Level Annunciator	Actuates at 45% WR to indicate steam generator lo-lo level.	Removed.

There are no changes to the Emergency Feedwater Actuation Signal initiation logic. There are no changes to the system logic with respect to the main steam isolation signal (MSIS) or manual control switch "closed" system response. Upon receipt of either input signal, the priority closed signal output will be provided to close the associated control valves.

Summary of Evaluation:
The Emergency Feedwater (EFW) control valve logic will be modified such that the Safety Injection Actuation Signal (SIAS) signal will be permanently actuated in the EFW system controls which causes

the EFW control system to automatically perform the steam generator level control mode of operation. The flow control mode will no longer be utilized.

UFSAR Section 10.4.9.1 (Design Basis) lists the EFW system intended design function and is summarized as follows:

1. To provide sufficient supply of cooling water to the steam generators (SG) for the removal of decay heat from the reactor during emergency situations when the main feedwater system is not available
2. To reduce reactor coolant temperature to shutdown cooling conditions.
3. To prevent lifting the pressurizer safety valves.
4. To maintain the steam generator (SG) level above the top of the SG tubes for mitigation of radiological dose consequences.
5. To deliver emergency feedwater flow against the first main steam safety valve set pressure.
6. To perform its intended function in the event of a single failure in the system.
7. To have sufficient water supply to reach shutdown cooling condition.
8. To operate for 4 hours during a station blackout.
9. To preclude hydraulic instabilities.
10. To operate following any design basis natural phenomena.
11. Maintain the steam generator tubes covered for radiological scrubbing.

Combustion Engineering letter C-CE-7699 [Reference 31] Section 3.0 (System Design) describes the EFW control logic design as follows:

> This system was designed specifically to avoid overcooling of the primary system and possible activation of the SIS.

The design function of the EFAS critical, lo, and lo-lo levels were to prevent an excessive cooldown and an unnecessary safety injection actuation which could complicate an uncomplicated reactor trip or minor event. For this change, Westinghouse analysis DAR-OA-08-6 [Reference 14] determined that the larger and earlier EFW flows would not result in overcooling the reactor coolant system such that an unnecessary safety injection actuation or draining the pressurizer would not occur. Thus, the EFW control scheme design function continues to be met.

One EFW design function is to preclude hydraulic instabilities (water hammer). Waterford 3 Safety Evaluation Report (NUREG-0787) [Reference 32] Section 10.4.7 describes that this design function was met by the physical design of the plant as follows:

> The condensate / feedwater system is designed to preclude the potential for damaging flow instabilities (waterhammer). The feedwater piping is routed in a manner that minimizes its being drained by providing a vertical drop in the piping immediately outside the steam generator feedwater nozzle and by providing two check valves on each line between the steam generators and the feedwater pumps. Further, C-tubes have been provided on the feedwater distribution ring (spargers) which discharge above the spargers to provide further assurance that the feedwater piping remains full. In addition, the applicant has committed to perform preoperational tests utilizing normal plant operating procedures to demonstrate the ability to restore steam generator level following a low level transient without causing unacceptable feedwater / steam generator water hammer. Thus, the guidelines of BTP ASB 10-2, "Design Guidelines for Waterhammer in Steam Generators with Top Feedring Designs," are met.

The replacement steam generators continue to meet the Waterford 3 safety evaluation report requirements. WCAP-17066 [Reference 9] Section 3.0 provides the following description:

> During normal operation, feedwater enters the steam generator through a spray nozzle equipped feedring located in the steam generator upper shell. The feedring is elevated above

the feedwater nozzle to minimize the potential for feedwater thermal stratification at the nozzle location. The spray nozzles feature a top mounted (vented) configuration for water hammer mitigation with small diameter holes to inhibit loose parts ingress into the steam generator.

This is consistent with UFSAR Table 10.4.9.A-2 (sheet 2) which states:

> The Waterford 3 EFS does not throttle flow to avoid water hammer. The EFS will supply on demand sufficient initial flow to assure adequate decay heat removal. Water hammer considerations have been taken into account in the final design.

This means that the EFW control scheme does not have a design function to prevent water hammer because the physical system design performs that function. Thus, this change has no impact on preventing water hammer.

UFSAR Section 5.4.2 describes the steam generator design basis and lists the design transients used to ensure the code allowable stress limits are met. WCAP-17066 documents the stress analysis results which demonstrate that all applicable requirements of the ASME Boiler and Pressure Vessel Code are satisfied. Thus, the EFW change does not adversely impact the steam generator.

The EFW valves are supplied from the nitrogen accumulators when instrument air is not available. UFSAR Section 9.3.9.4 (Safety Evaluation) describes that the safety related nitrogen accumulators are capable of providing motive air to pneumatically operated valves for 10 hours. Procedures are established for operating manual handwheel overrides or lining up backup air supplies for continued safety function after 10 hours. Evaluation letter 1062-0082-LTR-002 [Reference 29] concludes that based on a review of the existing calculations and periodic performance of surveillance testing, that in the event of a loss of the normal instrument air supply, the available nitrogen accumulator supplies will support the design basis operation of EFW system control and isolation valves.

Westinghouse letter LTR-SCC-16-017 [Reference 5] evaluated the accident analyses and demonstrated that the existing analyses remain bounding. Westinghouse calculation CN-SCC-15-031 [Reference 6] evaluated the impact of the modified EFW logic on the Nuclear Steam Supply System (NSSS) component design transients. The CN-SCC-15-031 results were incorporated into the steam generator design specification SPEC-10-00012-W [Reference 7] and the steam generator design report WCAP-17066 [Reference 9]. WCAP-17066 demonstrates that ASME Code requirements continue to be met. Calculation CN-TAS-03-30 [Reference 11] and CN-TAS-03-31 [Reference 12] dose consequences remain bounding. The steam generator overfill event ECS02-005 [Reference 13] is not impacted.

Technical Specification Table 3.3-4 gives the Emergency Feedwater Actuation Signal (EFAS) control valve logic (Wide Range SG Level – Low) trip value as ≥36.3% WR and the allowable value as ≥35.3% WR. The EFAS critical level setpoint of 55% WR bounds the ≥36.3% WR which ensures the Technical Specification Table 3.3-4 requirement is met. Calculation ECI92-012 [Reference 15] validates the instrumentation meets the Technical Specification requirements. Per ECI92-012, the analysis limit is 21.3% which is the value that the accident analyses uses and includes uncertainty and the testing error (allowable value) to ensure the Technical Specification limit is conservative. The Technical Specification limit and analysis limit are not changing which means the EFAS critical level setpoint of 55% is well above the analysis limit so the Technical Specification requirements continue to be met.

The 10CFR50.59 evaluation demonstrated that this change is acceptable. Each of the 8 questions specifically addressed the proposed change and associated impacts.

References

1. Waterford 3 Technical Specification through Amendment 249.
2. Waterford 3 Updated Final Safety Analysis Report through Amendment 309.
3. NEI 96-07 Revision 1, Guidelines for 10CFR50.59 Implementation, November 2000.
4. LTR-SCC-16-016 Revision 0, Waterford Unit 3 Modified EFW System Evaluation for Transient Analyses which Are Not Impacted, September 20, 2016.
5. LTR-SCC-16-017, Non-LOCA Transient Analysis Impact Evaluation for EFW System Modification at Waterford Unit 3, June 30, 2016.
6. CN-SCC-15-031 Revision 0, RCS Components Design Transients Evaluation for Waterford Unit 3 with Modified Emergency Feedwater System, June 16, 2016.
7. SPEC-10-00012-W Revision 0 (420A56 Revision 3), Waterford 3 Delta 110 Replacement Steam Generator.
8. CN-NCE-08-44 Revision 1, Waterford 3 Replacement Steam Generator TRANFLOW Analysis: Emergency and Faulted Transients to Support Emergency Feedwater System Modifications.
9. WCAP-17066-P Revision 3, Waterford 3 Steam Electric Station Delta 110 Replacement Steam Generator Design Report, November 2016.
10. LTR-CDA-16-34, Waterford Unit 3 Steam Generator Mechanical Ribbed Plug Documentation Review, September 2, 2016.
11. CN-TAS-03-30 Rev. 5, Waterford-3 3716 MWth Power Uprate Project – Chapter 15 EAB and LPZ Dose Consequences, May 17, 2005.
12. CN-TAS-03-31, Rev. 01, Waterford-3 3716 MWth Power Uprate Project - SGTR Dose Consequences, September 30, 2004.
13. ECS02-005 Revision 2, Effects of Uncontrolled Maximum EFW on Accident Situations, EC62343.
14. DAR-OA-08-06 Revision 3, Waterford 3 Replacement Steam Generators: Evaluation of Emergency Feedwater Actuation Signal Reset.
15. ECI92-012 EC64801, Steam Generator Level (Wide Range) Instrumentation Loop Uncertainty.
16. ECS10-001 EC64801, Safety Analysis Groundrules.
17. OP-500-009, Control Room Cabinet K.
18. OP-500-011, Control Room Cabinet M.
19. OP-500-012, Control Room Cabinet N.
20. Regulatory Guide 1.53 Revision 2, Application of the Single Failure Criterion to Safety Systems, November 2003.
21. IEEE 379-2000, IEEE Standard Application of the Single Failure Criterion to Nuclear Power Generating Station Safety Systems, September 21, 2000.
22. Regulatory Guide 1.22 Revision 0, Periodic Testing of Protection System Actuation Functions, February 1972.
23. IEEE Standard 279, Criteria for Protection Systems for Nuclear Power Generating Stations, 1971.
24. IEEE Standard 338, IEEE Trial Use Criteria for the Periodic Surveillance Testing of Nuclear Power Generating Station Safety Systems, 1971.
25. Regulatory Guide 1.53 Revision 0, Application of the Single Failure Criterion to Nuclear Power Plant Protection Systems, June 1973.
26. IEEE Standard 379, IEEE Trial-Use Guide for the Application of the Single-Failure Criterion to Nuclear Power Generating Station Protection Systems, 1972.
27. Westinghouse Letter CWTR3-17-10, Acceptability of the Use of the Computer Code TRANFLOW in Support of the Waterford Unit 3 Emergency Feedwater Flow Logic Modification, March 16, 2017.
28. NUREG-0787, Safety Evaluation Report Related to the Operator of Waterford Steam Electric Station Unit No. 3, July 1981.
29. 1062-0082-LTR-002 Revision 1, Emergency Feedwater System Control and Isolation Valves Nitrogen Consumption, February 14, 2017.

30. EC8458, Replacement Steam Generator Design, February 28, 2013.
31. C-CE-7699, Emergency Feedwater Control System, May 26, 1982 [eB CDCC14412].
32. NUREG-0787, Safety Evaluation Report related to the operation of Waterford Steam Electric Station Unit No. 3, July 1981.
33. MNQ10-1 Revision 3, Emergency Feedwater System Head Curves.
34. EC25198 Revision 0, Engineering Operability Input for CR-W3-2010-6047.
35. EC40612 Revision 0, NFPA805 Design Document Updates.

Is the validity of this Evaluation dependent on any other change? ☐ **Yes** ☒ **No**

If "Yes," list the required changes/submittals. The changes covered by this 50.59 Evaluation cannot be implemented without approval of the other identified changes (e.g., license amendment request). Establish an appropriate notification mechanism to ensure this action is completed.

Based on the results of this 50.59 Evaluation, does the proposed change require prior NRC approval? ☐ **Yes** ☒ **No**

Preparer: William Steelman / See IAS for Signature / SMI / Engineering / 3-30-17
Name (print) / Signature / Company / Department / Date

Reviewer: James Hoss / See IAS for Signature / Entergy / Engineering / 3-30-17
Name (print) / Signature / Company / Department / Date

OSRC: Ran Gilmore / See IAS for Signature / 3-30-17 /
Chairman's Name (print) / Signature / Date

W3 17-07
OSRC Meeting #

II. 50.59 EVALUATION

Does the proposed Change being evaluated represent a change to a method of evaluation ONLY? If "Yes," Questions 1 – 7 are not applicable; answer only Question 8. If "No," answer all questions below.

☐ Yes
☒ No

Does the proposed Change:

1. Result in more than a minimal increase in the frequency of occurrence of an accident previously evaluated in the UFSAR?

☐ Yes
☒ No

BASIS:

EC64801 will modify the Emergency Feedwater (EFW) control logic such that the EFW control valves will always be in level control mode once the steam generator critical level is reached. The equipment remains designed to the same NRC requirements, design, material, construction, and independence standards as described in the UFSAR.

The first step in addressing the frequency of occurrence of an accident is to identify which accidents could be caused by the emergency feedwater system. The UFSAR was reviewed to identify which transients and accidents previously evaluated could be initiated or caused by the emergency feedwater system. The transient and accident analyses that are already included in the UFSAR are as follows:

> UFSAR Section 15.1.1.2 (Increase in Feedwater Flow) describes an event caused by the startup of emergency feedwater with normal feedwater in the manual mode. The emergency feedwater system supplies relatively cold water from the condensate storage pool to the steam generators; the starting of the emergency feedwater system would simultaneously increase feedwater flow and decrease feedwater temperature.
>
> UFSAR Section 15.1.2.2 (Increase in Feedwater Flow with a Concurrent Single Failure of an Active Component) describes an event caused by the startup of emergency feedwater with normal feedwater in the manual mode with an active single failure.

UFSAR Section 15.1.1.2 (Increase in Feedwater Flow) is classified as a moderate frequency incident [Reference 1]. UFSAR Section 15.1.2.2 (Increase in Feedwater Flow with a Concurrent Single Failure of an Active Component) is classified as an infrequent frequency incident [Reference 1]. For these events, the accident frequency of occurrence would be moderate and infrequent. UFSAR Section 15.0.1 defines moderate frequency incidents as incidents any one of which may occur during a calendar year for a particular plant. Infrequent incidents are defined as incidents any one of which may occur during the lifetime of a particular plant.

The next step is to determine if the EC64801 change could impact the accident frequency of occurrence. UFSAR Section 7.3.1.1.6 (Emergency Feedwater System) describes the emergency feedwater system controls. The Emergency Feedwater Actuation Signal (EFAS) starts the emergency feedwater pumps and opens the emergency feedwater shutoff valves to the steam generators. EFAS does not automatically initiate EFW flow until a predetermined steam generator level (critical level) is reached. At the steam generator critical level, the EFW control valves respond to the automatic signals and open to provide full flow. UFSAR Section 7.3.1.1.6.2 describes the EFW control valve logic. In order for the UFSAR Section 15.1.1.2 or UFSAR Section 15.1.2.2 events to occur, an EFAS must be initiated and SG level must be lowered to the EFAS critical level. EC64801 makes no changes to the EFAS initiation controls nor does it cause the SG level to lower, this change only modifies the control valve logic which is actuated after an EFAS. This means that none of the event initiator frequencies can be impacted by this change and accident frequency of occurrence remains the same.

2 Result in more than a minimal increase in the likelihood of occurrence of a malfunction of a structure, system, or component important to safety previously evaluated in the UFSAR? ☐ Yes ☒ No

BASIS:
EC64801 will modify the Emergency Feedwater (EFW) control logic such that the EFW control valves will always be in level control mode once the steam generator critical level is reached. The term "malfunction of an SSC important to safety" refers to the failure of structures, systems and components (SSCs) to perform their intended design functions.

UFSAR Section 10.4.9.1 (Design Basis) lists the EFW system intended design function and is summarized as follows:

1. To provide sufficient supply of cooling water to the steam generators (SG) for the removal of decay heat from the reactor during emergency situations when the main feedwater system is not available
2. To reduce reactor coolant temperature to shutdown cooling conditions.
3. To prevent lifting the pressurizer safety valves.
4. To maintain the steam generator (SG) level above the top of the SG tubes for mitigation of radiological dose consequences.
5. To deliver emergency feedwater flow against the first main steam safety valve set pressure.
6. To perform its intended function in the event of a single failure in the system.
7. To have sufficient water supply to reach shutdown cooling condition.
8. To operate for 4 hours during a station blackout.
9. To preclude hydraulic instabilities.
10. To operate following any design basis natural phenomena.
11. Maintain the steam generator tubes covered for radiological scrubbing.

Combustion Engineering letter C-CE-7699 [Reference 31] Section 3.0 (System Design) describes the EFW control logic design as follows:

> This system was designed specifically to avoid overcooling of the primary system and possible activation of the SIS.

The design function of the EFAS critical, lo, and lo-lo levels were to prevent an excessive cooldown and an unnecessary safety injection actuation which could complicate an uncomplicated reactor trip or minor event. For this change, Westinghouse analysis DAR-OA-08-6 [Reference 14] determined that the larger and earlier EFW flows would not result in overcooling the reactor coolant system such that an unnecessary safety injection actuation or draining the pressurizer would not occur. The DAR-OA-08-6 evaluated the loss of feedwater event which would encompass transients such as the tornado event and station blackout Thus, the EFW control scheme design function continues to be met.

One EFW design function is to preclude hydraulic instabilities (water hammer). Waterford 3 Safety Evaluation Report (NUREG-0787) [Reference 32] Section 10.4.7 describes that this design function was met by the physical design of the plant as follows:

> The condensate / feedwater system is designed to preclude the potential for damaging flow instabilities (waterhammer). The feedwater piping is routed in a manner that minimizes its being drained by providing a vertical drop in the piping immediately outside the steam generator feedwater nozzle and by providing two check valves on each line between the steam generators and the feedwater pumps. Further, C-tubes have been provided on the feedwater distribution ring (spargers) which discharge above the spargers to provide further assurance that the feedwater piping remains full. In addition,

the applicant has committed to perform preoperational tests utilizing normal plant operating procedures to demonstrate the ability to restore steam generator level following a low level transient without causing unacceptable feedwater / steam generator water hammer. Thus, the guidelines of BTP ASB 10-2, "Design Guidelines for Waterhammer in Steam Generators with Top Feedring Designs," are met.

The replacement steam generators continue to meet the Waterford 3 safety evaluation report requirements. WCAP-17066 [Reference 9] Section 3.0 provides the following description: During normal operation, feedwater enters the steam generator through a spray nozzle equipped feedring located in the steam generator upper shell. The feedring is elevated above the feedwater nozzle to minimize the potential for feedwater thermal stratification at the nozzle location. The spray nozzles feature a top mounted (vented) configuration for water hammer mitigation with small diameter holes to inhibit loose parts ingress into the steam generator.

This is consistent with UFSAR Table 10.4.9.A-2 (sheet 2) which states:

> The Waterford 3 EFS does not throttle flow to avoid water hammer. The EFS will supply on demand sufficient initial flow to assure adequate decay heat removal. Water hammer considerations have been taken into account in the final design.

This means that the EFW control scheme does not have a design function to prevent water hammer because the physical system design performs that function. Thus, this change has no impact on preventing water hammer.
UFSAR Section 5.4.2 describes the steam generator design basis and lists the design transients used to ensure the code allowable stress limits are met. WCAP-17066 documents the stress analysis results which demonstrate that all applicable requirements of the ASME Boiler and Pressure Vessel Code are satisfied. Thus, the EFW change does not adverse impact the steam generator.

The EFW valves are supplied from the nitrogen accumulators when instrument air is not available. UFSAR Section 9.3.9.4 (Safety Evaluation) describes that the safety related nitrogen accumulators are capable of providing motive air to pneumatically operated valves for 10 hours. Procedures are established for operating manual handwheel overrides or lining up backup air supplies for continued safety function after 10 hours. EC40612 [Reference 35] implements the NFPA-805 requirement for the EFW nitrogen accumulator mission time of 24 hours. Evaluation letter 1062-0082-LTR-002 [Reference 29] concludes that based on a review of the existing calculations and periodic performance of surveillance testing, that in the event of a loss of the normal instrument air supply, the available nitrogen accumulator supplies will support the design basis operation of EFW system control and isolation valves. The EC64801 modification eliminates the failure mechanism that caused the excessive EFW valve cycling and the associated extra use of nitrogen volume. This means that the EFW system performance will be within the design requirements.

For the current design, the Emergency Feedwater Actuation Signal (EFAS) actuation supplies EFW flow rate based upon EFAS critical, lo, and lo-lo level signals. The EFW control valves adjust the EFW flow rate as a function of the difference between the actual SG level and the desired level (flow versus level). That is, the greater the level deviation, the higher the flow rate. If there is a Safety Injection Actuation Signal (SIAS) and the level falls to the EFAS critical level setpoint, the valves will go wide open and remain there until the desired level is restored.

After the modification, any EFAS actuation will cause the control valves to go wide open at the EFAS critical level setpoint until level is restored to the level control setpoints. This means that there will be higher flow rates of cold water entering the SGs earlier and for a longer time than at

present. This change has the potential to affect the plant response to analyzed transients and to affect the Nuclear Steam Supply System (NSSS) components.

The first step is to determine the structure, system, or component (SSC) analyses that may be impacted. Westinghouse calculation CN-SCC-15-031 [Reference 6] evaluated the design transients defined in the Reactor Vessel Specification, Pressurizer Specification, Steam Generator Specification, Reactor Coolant System Specification, Reactor Coolant Pump Specification, Pressurizer Spray Nozzle Specification, Safety Injection/Shutdown Cooling Nozzle Specification, Charging Nozzle Specification, and Surge Line/Nozzle Specification. This was performed to determine which SSCs could be impacted by this change. The ASME Boiler and Pressure Vessel Code requires plant component design specifications to identify design, service and test loadings. A list of the design, service and test transients that may occur over the life of the plant are compiled and design transients are assigned to each. Design transients provide pressure and temperature data that define conservative design loadings, service loadings and test loadings. A bounding estimate for the number of times (cycles) the plant may experience a specific transient is assigned to each transient. System and component stress and fatigue calculations are calculated based on the design transient's pressure and temperature limits and the bounded cycles. Only the Steam Generator specification was identified as being impacted and this was due to the loss of feedwater and feedwater line break design transients.

The Steam Generator Design Specification SPEC-10-00012-W [Reference 7] was updated for the loss of feedwater and feedwater line break design transients. The updated Steam Generator Design Specification SPEC-10-00012-W required a re-evaluation of WCAP-17066 [Reference 9]. WCAP-17066 documents the stress analysis results which demonstrate that all applicable requirements of the ASME Boiler and Pressure Vessel Code are satisfied. CN-NCE-08-44 [Reference 8] re-evaluated the loss of feedwater and feedwater line break design transients for input into WCAP-17066. WCAP-17066 Appendix D was added to address this modification. WCAP-17066 Appendix D evaluated the loss of feedwater and feedwater line break transients and showed that the feedwater nozzle meets the non-ductile failure requirements.

With all the NSSS design specifications continuing to meet the ASME Boiler and Pressure Vessel Code requirements, the EFW logic modification did not increase the likelihood of a malfunction based upon the EFW system response (larger EFW flow at an earlier time).

UFSAR Table 10.4-14 (EMERGENCY FEEDWATER SYSTEM FAILURE MODE AND EFFECTS ANALYSIS) provides the failure modes and effects for the EFW system. The EFW logic modification is limited to internal panel wiring de-terminations and card modification/removal. The EFW logic instrumentation will remain safety related, seismically qualified, and independent. The existing "NDI" PAC card's inverter switch is repositioned from the open position to the closed position. This will supply a constant logic high signal to the EFW controller card and force the system to operate in the Safety Injection Actuation Signal (SIAS) mode at all times. This design allows the associated NDI relay to operate in a normally de-energized state as it does in the current design. The inverter switch/relay for one steam generator EFW primary flow control valve and the other steam generator EFW backup flow control valve are located on the same NDI card impacting both valves at the same time. A failure of the NDI card would be no worse than the failure already described in UFSAR Table 10.4-14 (EMERGENCY FEEDWATER SYSTEM FAILURE MODE AND EFFECTS ANALYSIS) for an EFW isolation valve failure to open because one EFW flow path remains available on both steam generators. This means that the EFW logic modification did not increase the likelihood of a malfunction based upon the EFW logic meeting the same regulatory and design requirements.

Prior to this change, the UFSAR Chapter 15 accident analyses generally assumed that at 30

minutes into the event that the operator took manual control of EFW and the atmospheric dump valves to initiate a cooldown to shutdown cooling initiation conditions. The EFW was taken to manual control because the existing EFAS critical, lo, and lo-lo setpoints (without SIAS) did not adequately restore steam generator level above the top of the SG tubes and during a cooldown higher flow rates would be needed. After this modification, the EFW system functions in the SIAS mode at all times which actuates EFW valves wide open at the EFAS critical level setpoint. Since the EFW primary control valves and EFW backup control valves will now be open fully at the EFAS critical level and remain fully open until the SG level approaches the level control setpoints, the operators would not be required to take manual control of EFW to ensure the SG tubes remain covered and flow rates are sufficient during the cooldown. The modification allows the EFW system to control in automatic mode at all times and the removal of the requirement for operator manual control lowers the likelihood of a malfunction equipment via operator error.

The new EFW control scheme provides full EFW when the SG critical level is reached. MNQ10-1 [Reference 33] evaluated the impact of full EFW flow associated with the main steam line break event. MNQ10-1 used EC25198 [Reference 34] to demonstrate that the run out flow was acceptable. The main steam line break steam generator pressures and corresponding EFW flows would bound all the other potential transients and accidents.

ECS02-005 (Effects of Uncontrolled EFW on Accident Situations) [Reference 13] evaluates full EFW flow to one steam generator upon an EFW Actuation Signal (EFAS) and demonstrates that the steam generator fill time for full EFW flow provides an acceptable margin for operator action to terminate EFW flow. This event could cause the failure of the main steam piping if the steam piping were to contain water which could provide a direct path outside containment for primary to secondary leakage. Since, ECS02-005 already assumes full EFW flow at EFAS initiation, this change would have no impact on the analysis results because the steam generator critical level is below the EFAS initiation setpoint. Thus, this change will not increase the likelihood of a malfunction.

UFSAR Section 7.3.1.2 describes the Emergency Safety Feature Actuation System design basis. The Emergency Safety Feature Actuation System is designed to assure adequate performance of their protective functions in compliance with 10CFR50 Appendix A, Regulatory Guide 1.22 [Reference 22], IEEE Standard 338 [Reference 23], and IEEE Standard 279 [Reference 24]. Waterford 3 will remain in compliance with 10CFR50 Appendix A, Regulatory Guide 1.22, IEEE Standard 338, and IEEE Standard 279 after this change, thus not impacting the likelihood of a malfunction.

This change impacts the automatic operation of the emergency feedwater (EFW) control system which has an intended design function to provide feedwater to the steam generators as described in UFSAR Section 7.3.1.1.6 and UFSAR Section 10.4.9. The ASME code, safety classification, seismic qualification, design, and regulatory requirements continue to be met. Based upon these requirements still being met, the proposed change does not result in more than a minimal increase in likelihood of occurrence of malfunction of a structure, system, or component important to safety previously evaluated in the UFSAR.

3. Result in more than a minimal increase in the consequences of an accident previously evaluated in the UFSAR? ☐ Yes ☒ No

BASIS:

EC64801 will modify the Emergency Feedwater (EFW) control logic such that the EFW control valves will always be in level control mode once the steam generator critical

level is reached. When determining which activities represent "more than a minimal increase in consequences" pursuant to 10 CFR 50.59, it must be recognized that "consequences" means dose. Therefore, an increase in consequences must involve an increase in radiological doses to the public or to control room operators. UFSAR Section 7.3.1.1.6.2 gives a description of the automatic EFW Control system operation on regulating the flow of EFW to the steam generators so as to minimize adverse effects on the Reactor Coolant System. The automatic EFW control system is credited in applicable UFSAR Chapter 15 analyses and is discussed in UFSAR Section 10.4.9.3.6. The UFSAR Chapter 15 accidents which could have their radiological consequences adversely impacted by the Emergency Feedwater (EFW) control logic change were assessed to demonstrate the impact. Each UFSAR Chapter 15 section is evaluated for the associated impact.

UFSAR Section 15.1 (Increase in Heat Removal by the Secondary System)
The increase in heat removal by the secondary system are cooldown accidents. This change will provide full EFW flow at the SG critical level which means that in comparison to the current design, more EFW flow at an earlier time which could impact the cooldown events. Westinghouse performs the Waterford 3 accident analyses and assessed the impact of this change. Westinghouse letter LTR-SCC-16-017 [Reference 5] communicated the potential accident analyses affected and associated impacts. For UFSAR Section 15.1, Westinghouse identified the steam line break events are the impacted transients.

UFSAR 15.1.3.1 Steam System Piping Failures Post-Trip Return-To-Power
UFSAR 15.1.3.2 Steam System Piping Failures Inside and Outside Containment Modes 3 and 4 with All CEAs on the Bottom
UFSAR 15.1.3.3 Steam System Piping Failures: Pre-Trip Power Excursion Analysis

The steam line break (SLB) and subcritical SLB were evaluated for the new EFW system modeling. During the SLB event, neither steam generator (SG) receives EFW flow. A main steam isolation signal is generated in less than 20 seconds after event initiation, which isolates EFW flow to the ruptured SG; therefore, it does not receive EFW flow. The intact SG does not receive EFW flow because the liquid level is greater than the EFW actuation setpoint. Because neither the SLB nor the subcritical SLB events have EFW flow, and there is no change to isolation logic for a ruptured SG, the analysis of record remains valid and bounding for the planned EFW system modification.

UFSAR Section 15.2 (Decrease in Heat Removal by the Secondary System)
The decrease in heat removal by the secondary system are heatup events. The secondary heat removal capability is lowered or removed causing a primary and secondary side transient. This change will provide full EFW flow at the SG critical level which means that in comparison to the current design, more EFW flow at an earlier time which would be beneficial for these accidents. Westinghouse letter LTR-SCC-16-017 communicated that after the plant modification, the EFW flow rate will be greater, sooner after event initiation. For these events, higher EFW flow rates make the event more benign; therefore, the analyses of record remain valid and bounding for the planned EFW system modification. UFSAR Section 10.4.9.3.6 describes the feedwater line break and loss of normal feedwater are the limiting events with to the EFW control system. The feedwater line break and loss of normal feedwater are UFSAR Section 15.2 events that were addressed in letter LTR-SCC-16-017 as remaining bounded by the existing analysis.

UFSAR Section 15.3 (Decrease in Reactor Coolant System Flow Rate)
The decrease in reactor coolant system flow rate events are primary system transients and are thermal margin events. This modification has no tie to the reactor coolant

pump flow rates and would not impact the results of the reactor coolant system flow coastdown and thermal margin utilized. Westinghouse letter LTR-SCC-16-017 did not identify any impacts associated with these transients. This change could impact the event reactor coolant system natural circulation flow. The earlier and larger EFW flow could add more cooler water to the steam generators which in turn would produce a larger temperature difference between the reactor coolant system and the steam generators. Natural circulation flow is driven by the temperature difference between the primary and secondary sides. This change would be a benefit because it could increase the temperature difference and corresponding driving force. Thus, the analyses of record remain valid and bounding for the planned EFW system modification.

UFSAR Section 15.4 (Reactivity and Power Distribution Anomalies)
The reactivity and power distribution anomalies events are caused by major reactivity changes. This modification would not impact the results of the reactivity changes and associated consequences because in comparison to the events presented in UFSAR Section 15.4 (CEA Ejection, Bank Withdrawal), the EFW flow change and potential associated temperature change on the primary side would only cause a minor reactivity change which would remain bounded by the existing analyses. Westinghouse letter LTR-SCC-16-017 did not identify any impacts associated with these transients. Thus, the analyses of record remain valid and bounding for the planned EFW system modification.

UFSAR Section 15.5 (Increase in Reactor Coolant System Inventory)
The increase in reactor coolant system inventory events are caused by adding additional water to the reactor coolant system. This modification could have a potential positive benefit to mitigate the accident by providing earlier and larger EFW flow which would provide additional cooling to the reactor coolant system. The reactor coolant system cooling benefit would be minimal with respect to increasing reactor coolant system inventory caused by the equipment malfunction (e.g. full charging with minimum letdown). Westinghouse letter LTR-SCC-16-017 did not identify any impacts associated with these transients. Thus, the analyses of record remain valid and bounding for the planned EFW system modification.

UFSAR Section 15.6 (Decrease in Reactor Coolant System Inventory)
The decrease in reactor coolant system inventory is caused by losses of inventory on the primary side. Similar to the UFSAR Section 15.2 events, this change would provide full EFW flow at the SG critical level which means that in comparison to the current design, more EFW flow at an earlier time would be beneficial for these accidents. Earlier and larger EFW flow would mean the SG tubes are covered faster and more radiological scrubbing is available to lower the dose consequences. For loss of coolant type events, this change could provide earlier and larger flows of EFW to the steam generators. This could have a cooling impact on the primary coolant side resulting in some shrinkage. The loss of coolant inventory (event initiator) impact would be the dominate aspect of the accident. The potential cooldown caused by EFW would be insignificant in comparison to the loss of coolant effect. Thus, the analyses of record remain valid and bounding for the planned EFW system modification.

UFSAR Section 15.7 (Radioactive Release from a Subsystem or Component)
The radioactive releases from the nuclear fuel, tank, or spent fuel cask has no direct tie to the EFW system, thus these events are not impacted. Westinghouse letter LTR-SCC-16-017 [Reference 4] did not identify any impacts associated with these

transients. The analyses of record remain valid and bounding for the planned EFW system modification.

UFSAR Section 15.8 (Anticipated Transients without Scram)
The anticipated transient without scram (ATWS) credits the diverse EFW actuation system (DEFAS) discussed in UFSAR Section 7.8. The EFW modification changes the EFW control valve logic such that at 55% WR, the EFW control valves will open fully which provides greater EFW flow at an earlier time. This would be a beneficial change for this event because the ATWS would have higher heat loads and require more secondary inventory which would be provided by this change. This change would provide additional EFW flow earlier which would make the consequences less adverse.

UFSAR Section 15.9 (Miscellaneous)
This section covers the asymmetric steam generator transient. This event is a thermal margin event similar to that discussed for UFSAR Section 15.3. EFW is not actuated during this event so the EFW modification has no impact on the transient. Westinghouse letter LTR-SCC-16-017 did not identify any impacts associated with this transient. The analysis of record remains valid and bounding for the planned EFW system modification.

Design Transients (Inventory and Cooldown Rates)
Time to achieve shutdown cooling entry conditions - This change will provide full EFW flow at the SG critical level which means that in comparison to the current design, more EFW flow at an earlier time would allow shutdown cooling entry at an earlier time. The accident analyses are not changed because the Technical Specification Table 3.3-4 (Engineered Safety Features Actuation System Instrumentation Trip Values) Emergency Feedwater Actuation Signal (EFAS) control valve logic setpoint has not changed so the accident analyses flow initiation remains the same at the lower end of the analysis limit.

EFW Inventory Requirements - Westinghouse letter LTR-SCC-16-016 [Reference 4] transmitted the results of EFW usage due to this change. The earlier EFW flow rates prior to cooldown initiation affects the steam pressure, and hence the energy removal rate via the ADVs, over the duration of the cooldown the effects on total condensate usage would be negligible. Essentially, this change would provide more flow earlier in the event but less flow later because the same amount of energy has to be removed from the system.

Cooldown rate requirements (Technical Specification) - Westinghouse analysis DAR-OA-08-6 [Reference 14] demonstrated that the existing analyses envelope the reduction on RCS temperature due to the EFW flow. This means no adverse change with respect to cooldown rates. The Technical Specification 3/4.4.8 RCS cooldown limits are set to meet ASME Section III Appendix G requirements. The design transients were evaluated in Westinghouse analysis CN-SCC-15-031 [Reference 6] as input into WCAP-17066 [Reference 9] to meet the ASME requirements. WCAP-17066 demonstrated that the ASME requirements continue to be met.

Technical Specification
The Technical Specifications limiting conditions for operability provide the lowest functional capability for equipment required for safety. Technical Specification Table 3.3-4 (Engineered Safety Features Actuation System Instrumentation Trip Values) gives the Emergency Feedwater Actuation Signal (EFAS) control valve logic (Wide Range SG Level – Low) trip value as ≥36.3% and the allowable value as ≥35.3%. The

EFAS critical level setpoint of 55% WR bounds the ≥36.3% WR which ensures the Technical Specification Table 3.3-4 requirement is met. Calculation ECI92-012 [Reference 15] validates the instrumentation meets the Technical Specification requirements. Per ECI92-012, the analysis limit is 21.3% which is the value that the accident analyses uses and includes uncertainty and the testing error (allowable value) to ensure the Technical Specification limit is conservative. The Technical Specification trip value and analysis limit are not changing which means the EFAS critical level setpoint of 55% is well above the Technical Specification requirements. In accordance with the setpoint methodology, administrative controls on the as-found tolerance for the 55% setpoint will provide additional assurance that the SG wide-range level channels perform acceptably. Meeting the Technical Specification requirements ensures the accident analyses continue to be met and there is no increase in the accident consequences.

Technical Specification 3.7.1.2 (Emergency Feedwater System) requires three EFW pumps and two flow paths. This change only impact the timing of when the EFW flow is actuated. The EFW pumps and flow paths still remain available to perform their design basis safety function.

Technical Specification 3.7.1.3 (Condensate Storage Pool) requires a condensate storage pool (CSP) minimum volume of 92% indicated level and the water temperature between 55F and 100F. Westinghouse letter LTR-SCC-16-016 [Reference 4] transmitted the results of EFW usage due to this change. The earlier EFW flow rates prior to cooldown initiation affects the steam pressure, and hence the energy removal rate via the ADVs, over the duration of the cooldown the effects on total condensate usage would be negligible. Essentially, this change would provide more flow earlier in the event but less flow later because the same amount of energy has to be removed from the system. This means there is no impact to the CSP required Technical Specification volume.

The nitrogen accumulators are a Technical Specification equipment support system. The EFW valves are supplied from the nitrogen accumulators when instrument air is not available. UFSAR Section 9.3.9.4 (Safety Evaluation) describes that the safety related nitrogen accumulators are capable of providing motive air to pneumatically operated valves for 10 hours. Procedures are established for operating manual handwheel overrides or lining up backup air supplies for continued safety function after 10 hours. EC40612 [Reference 35] implements the NFPA-805 requirement for the EFW nitrogen accumulator mission time of 24 hours. Evaluation letter 1062-0082-LTR-002 [Reference 29] concludes that based on a review of the existing calculations and periodic performance of surveillance testing, that in the event of a loss of the normal instrument air supply, the available nitrogen accumulator supplies will support the design basis operation of EFW system control and isolation valves. The EC64801 modification eliminates the failure mechanism that caused the excessive EFW valve cycling and the associated extra use of nitrogen volume. This means that the EFW system performance will be within the design requirements.

The accidents previously evaluated in the UFSAR were assessed for potential impacts and no adverse consequences were identified. This means that the accident dose consequences remain the same. Therefore, the proposed change does not result in more than a minimal increase in the consequences of an accident previously evaluated in the UFSAR.

4 Result in more than a minimal increase in the consequences of a malfunction of a structure, system, or component important to safety previously evaluated in the UFSAR? ☐ Yes ☒ No

BASIS:
EC64801 will modify the Emergency Feedwater (EFW) control logic such that the EFW control valves will always be in level control mode once the steam generator critical level is reached. When determining which activities represent "more than a minimal increase in consequences" pursuant to 10 CFR 50.59, it must be recognized that "consequences" means dose. Therefore, an increase in consequences must involve an increase in radiological doses to the public or to control room operators. The term "malfunction of an SSC important to safety" refers to the failure of structures, systems and components (SSCs) to perform their intended design functions. UFSAR Section 10.4.9.1 (Design Basis) lists the EFW system intended design function and is summarized as follows:

1. To provide sufficient supply of cooling water to the steam generators (SG) for the removal of decay heat from the reactor during emergency situations when the main feedwater system is not available
2. To reduce reactor coolant temperature to shutdown cooling conditions.
3. To prevent lifting the pressurizer safety valves.
4. To maintain the steam generator (SG) level above the top of the SG tubes for mitigation of radiological dose consequences.
5. To deliver emergency feedwater flow against the first main steam safety valve set pressure.
6. To perform their intended function in the event of a single failure in the system.
7. To have sufficient water supply to reach shutdown cooling condition.
8. To operate for 4 hours during a station blackout.
9. To preclude hydraulic instabilities.
10. To operate following any design basis natural phenomena.
11. Maintain the steam generator tubes covered for radiological scrubbing.

UFSAR Section 5.4.2 describes the steam generator design basis and lists the design transients used to ensure the code allowable stress limits are met. WCAP-17066 documents the stress analysis results which demonstrate that all applicable requirements of the ASME Boiler and Pressure Vessel Code are satisfied. Thus, the EFW change does not adverse impact the steam generator.

The EFW valves are supplied from the nitrogen accumulators when instrument air is not available. UFSAR Section 9.3.9.4 (Safety Evaluation) describes that the safety related nitrogen accumulators are capable of providing motive air to pneumatically operated valves for 10 hours. Procedures are established for operating manual handwheel overrides or lining up backup air supplies for continued safety function after 10 hours. EC40612 [Reference 35] implements the NFPA-805 requirement for the EFW nitrogen accumulator mission time of 24 hours. Evaluation letter 1062-0082-LTR-002 [Reference 29] concludes that based on a review of the existing calculations and periodic performance of surveillance testing, that in the event of a loss of the normal instrument air supply, the available nitrogen accumulator supplies will support the design basis operation of EFW system control and isolation valves. The EC64801 modification eliminates the failure mechanism that caused the excessive EFW valve cycling and the associated extra use of nitrogen volume. This means that the EFW system performance will be within the design requirements.

The first step is to determine the structure, system, or component (SSC) analyses that may be impacted. Westinghouse calculation CN-SCC-15-031 [Reference 6] evaluated the design

transients defined in the Reactor Vessel Specification, Pressurizer Specification, Steam Generator Specification, Reactor Coolant System Specification, Reactor Coolant Pump Specification, Pressurizer Spray Nozzle Specification, Safety Injection/Shutdown Cooling Nozzle Specification, Charging Nozzle Specification, and Surge Line/Nozzle Specification. This was performed to determine which SSC could be impacted by this change. The ASME Boiler and Pressure Vessel Code requires plant component design specifications to identify design, service and test loadings. A list of the design, service and test transients that may occur over the life of the plant are compiled and design transients are assigned to each. Design transients provide pressure and temperature data that define conservative design loadings, service loadings and test loadings. A bounding estimate for the number of times (cycles) the plant may experience a specific transient is assigned to each transient. System and component stress and fatigue calculations are calculated based on the design transient's pressure and temperature limits and the bounded cycles. Only the Steam Generator specification was identified as being impacted and this was due to the loss of feedwater and feedwater line break design transients.

The Steam Generator Design Specification SPEC-10-00012-W [Reference 7] was updated for the loss of feedwater and feedwater line break design transients. The updated Steam Generator Design Specification SPEC-10-00012-W required a re-evaluation of WCAP-17066 [Reference 9]. WCAP-17066 documents the stress analysis results which demonstrate that all applicable requirements of the ASME Boiler and Pressure Vessel Code are satisfied. CN-NCE-08-44 [Reference 8] re-evaluated the loss of feedwater and feedwater line break design transients for input into WCAP-17066. WCAP-17066 Appendix D was added to address this modification. WCAP-17066 Appendix D evaluated the loss of feedwater and feedwater line break transients and showed that the feedwater nozzle meets the non-ductile failure requirements.

With all the Nuclear Steam Supply System (NSSS) design specifications continuing to meet the ASME Boiler and Pressure Vessel Code requirements, the EFW logic modification did not increase the consequences of a malfunction based upon the EFW system response (larger EFW flow at an earlier time).

This change impacts the automatic operation of the emergency feedwater (EFW) control system which has an intended design function to provide feedwater to the steam generators as described in UFSAR Section 7.3.1.1.6 and UFSAR Section 10.4.9. The ASME code, safety classification, seismic qualification, design, and regulatory requirements continue to be met. Based upon these requirements still being met, the proposed change does not result in more than a minimal increase in the consequences of a malfunction of a structure, system, or component important to safety previously evaluated in the UFSAR.

5. Create a possibility for an accident of a different type than any previously evaluated in the UFSAR?

☐ Yes
☒ No

BASIS:

EC64801 will modify the Emergency Feedwater (EFW) control logic such that the EFW control valves will always be in level control mode once the steam generator critical level is reached. This change impacts the automatic operation of the emergency feedwater (EFW) control system which has an intended design function to provide feedwater to the steam generators as described in UFSAR Section 7.3.1.1.6 and UFSAR Section 10.4.9. UFSAR Chapter 6 and 15 were reviewed to identify types of accidents that might be different than those previously evaluated.

UFSAR Chapter 15.1 (Increase in Heat Removal by the Secondary System) provides accidents in which the secondary side (Steam Generators) remove excess heat from

the primary side (Reactor Coolant System). An inadvertent EFW actuation could add additional inventory to the Steam Generators (SGs). UFSAR Section 15.1.1.2 addresses this accident caused by the startup of emergency feedwater system. This change would have no impact on this event because the event initiation already assumes the EFW is actuated and cools down the secondary system.

The EFW system is primarily an accident mitigation system. The function and use of the EFW system will remain the same. Westinghouse letter LTR-SCC-16-017 [Reference 5] evaluated the timing of the EFW system flow and was shown not to impact the accident consequences. The proposed change also does not create any new physical system interactions that could cause a different type of accident.

Thus, an accident of a different type than previously evaluated will not be created.

6 Create a possibility for a malfunction of a structure, system, or component important to safety with a different result than any previously evaluated in the UFSAR? ☐ Yes ☒ No

BASIS:
EC64801 will modify the Emergency Feedwater (EFW) control logic such that the EFW control valves will always be in level control mode once the steam generator critical level is reached. The first step is to identify possible malfunctions of a structure, system, or components (SSC) with different results than previously evaluated to determine what could be impacted.

The steam generators use mechanical plugs for tube plugging. Failure of these plugs could cause a different set of conditions. Westinghouse letter LTR-CDA-16-34 [Reference 10] documents that a review of the Waterford Unit 3 mechanical ribbed plug qualification analysis was conducted to determine its applicability due to changes from the Emergency Feedwater System (EFW) control logic. This review concluded that the plug documentation remains applicable and the plug remains qualified. This means that the steam generator mechanical plugs cannot cause the possibility of a different type of malfunction.

The EFW valves are supplied from the nitrogen accumulators when instrument air is not available. UFSAR Section 9.3.9.4 (Safety Evaluation) describes that the safety related nitrogen accumulators are capable of providing motive air to pneumatically operated valves for 10 hours. Procedures are established for operating manual handwheel overrides or lining up backup air supplies for continued safety function after 10 hours. EC40612 [Reference 35] implements the NFPA-805 requirement for the EFW nitrogen accumulator mission time of 24 hours. Evaluation letter 1062-0082-LTR-002 [Reference 29] concludes that based on a review of the existing calculations and periodic performance of surveillance testing, that in the event of a loss of the normal instrument air supply, the available nitrogen accumulator supplies will support the design basis operation of EFW system control and isolation valves. The EC64801 modification eliminates the failure mechanism that caused the excessive EFW valve cycling and the associated extra use of nitrogen volume. This means that the EFW system performance will be within the design requirements.

The next step is to evaluate the actual physical modification changes. The EFW logic modification is limited to internal panel wiring de-terminations and card modification/removal. The EFW logic instrumentation will remain safety related, seismically qualified, and independent. The existing "NDI" PAC card's inverter switch is repositioned from the open position to the closed position. This will supply a constant logic high signal to the EFW controller card and force the system to operate in the Safety Injection Actuation Signal (SIAS) mode at all times. This design allows the associated NDI relay to operate in a normally de-energized state as it

does in the current design. This means that no normally energized failure mechanisms apply. The inverter switch/relay for one steam generator EFW primary flow control valve and the other steam generator EFW backup flow control valve are located on the same NDI card impacting both valves at the same time. A failure of the NDI card would be no worse than the failure already described in UFSAR Table 10.4-14 (EMERGENCY FEEDWATER SYSTEM FAILURE MODE AND EFFECTS ANALYSIS) for an EFW isolation valve failure to open because one EFW flow path remains available on both steam generators. Figure Q3-1 shows that each steam generator has two (2) parallel EFW flow paths with each flow path capable of providing 100% of the required EFW flow.

Figure Q3-1. Emergency Feedwater System

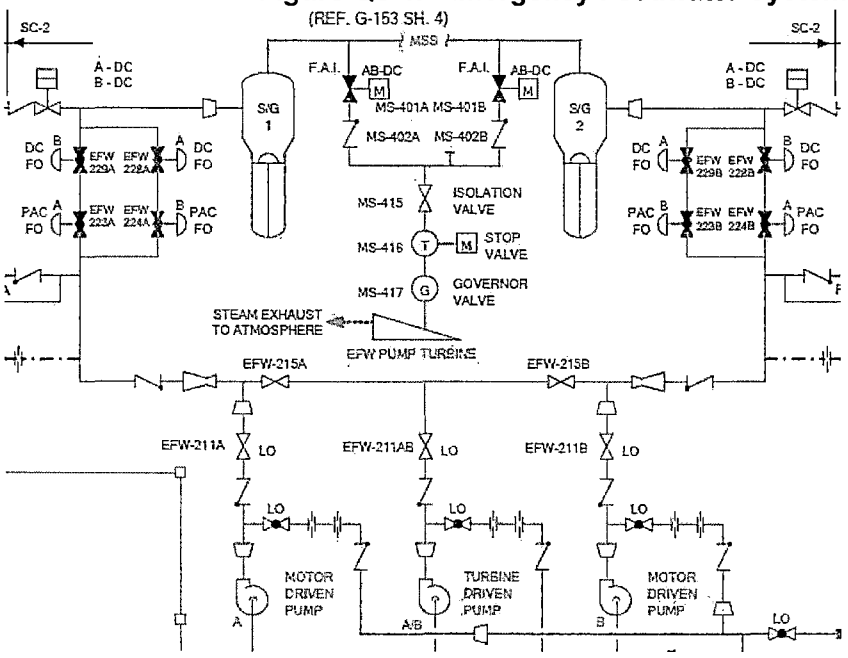

For design basis events which require steam generators available for heat removal, the flow paths through the primary flow control valves (EFW-224A(B)) or backup flow control valves (EFW-223A(B)) would be sufficient to ensure a secondary heat sink. The single failure of the NDI card would mean that only a single flow path to each steam generator is available but each flow path would still have full flow from 3 EFW pumps (~200% capacity). Since sufficient flow is available, this change did not create a possibility of a malfunction with a different result.

The EFAS lo and lo-lo (priority open) setpoint actuations are removed from the EFW control logic. The system is modified such that the EFW system functions in the SIAS mode at all times which would actuate EFW valves wide open at the EFAS critical level setpoint. Since the EFW Primary Control Valves (PCVs) and Backup Control Valves (BCVs) will now open fully at the EFAS critical level and remain fully open until the SG level approaches the level control setpoints, the EFAS lo and lo-lo (priority open) actuation signals are not required. The EFAS critical level actuation is not being changed and remains safety related and independent such that no single failure would prevent actuation. Since the EFAS critical level setpoint actuation will perform the required safety function, this change did not create a possibility of a malfunction with a different result.

The OP-500-011 [Reference 18] and OP-500-012 [Reference 19] steam generator lo-lo level alarms are being removed. These annunciators are not credited for any Technical Specification function and are not credited for UFSAR Chapter 6 or 15 mitigation. OP-500-009 [Reference 17] describes Reactor Protection System (RPS) steam generator level lo channel trip annunciators which are also steam generator level alarms. The RPS steam generator level lo alarms actuate at a steam generator level of 27.4% NR which is above the steam generator lo-lo level alarms which actuate at 45% WR. For accident response, the first annunciator indications of adverse steam generator level would be from the RPS steam generator level lo alarms and these would be the indications used for initial transient response. In addition, control room board indications of steam generator level would also provide crucial information during event identification and recovery. The removal of the steam generator lo-lo level alarms will not create the possibility of a malfunction with a different result.

The EFAS lo-lo (priority open) setpoint actuations and the SG lo-lo level alarms are removed from the EFW control logic. The combined impact of these removals must be addressed to ensure no adverse impact. The EFAS priority open overrides the EFW control system to ensure flow to the steam generators even under manual control. Prior to this change, the UFSAR Chapter 15 accident analyses generally assumed that at 30 minutes into the event that the operator took control of EFW and the atmospheric dump valves to initiate a cooldown to shutdown cooling initiation conditions. The EFW control valves were taken to manual control because the existing EFAS critical, lo, and lo-lo setpoints (without SIAS) did not adequately restore steam generator level above the top of the SG tubes and during a cooldown higher flow rates would be needed. Since the EFW system inherently credited manual operator action, the EFAS priority open and SG lo-lo level alarms helped the operators ensure the steam generators were not allowed to dry out. After this modification, the EFW system functions in the SIAS mode at all times which actuates EFW valves wide open at the EFAS critical level setpoint. Since the EFW control valves will now be open fully at the EFAS critical level and remain fully open until the SG level approaches the level control setpoints, the operators would not be required to take manual control of EFW to ensure the SG tubes remain covered and flow rates are sufficient during the cooldown. The modification allows the EFW system to control in automatic mode and with no operator manual control.

If manual operator action is still assumed, then potential exists for the operator to be the limiting single failure. First, the single failure design rules must be addressed and whether the operator can be a common cause failure (meaning the operator can cause multiple failures). UFSAR Section 7.3 and UFSAR Section 1.8.1.53 indicate that the Engineered Safety Feature Actuation System is designed consistent with the single failure criterion recommendations of Regulatory Guide 1.53 Revision 0 [Reference 25]. Regulatory Guide 1.53 Revision 0 endorses (with supplementary requirements) trial-use IEEE 379-1972 [Reference 26] code. Regulatory Guide 1.53 Revision 0 and IEEE 379-1972 only provided limited guidance with respect to common cause failures and do not address operator errors. More recent guidance provides more information that provides insights into the original design requirements. Regulatory Guide 1.53 Revision 2 [Reference 20] provides methods acceptable to the NRC with respect to single failure criterion. Regulatory Guide 1.53 Revision 2 endorses IEEE 379-2000 [Reference 21]. IEEE 379-2000 Section 5.5 addresses common cause failures. IEEE 379-2000 specifically states:

> Common-cause failures **not** subject to single-failure analysis include those that can result from external environmental effects (e.g., voltage, frequency, radiation, temperature, humidity, pressure, vibration, and electromagnetic interference), design deficiencies, manufacturing errors, maintenance errors, and operator errors.
>
> Personnel training; proper control room design; and operating, maintenance, and surveillance procedures are intended to afford protection from maintenance and operator errors.

> Additionally, provisions should be made to address common-cause failures. Examples of techniques are detailed defense-in-depth studies, failure mode and effects analysis, and analyses of abnormal conditions or events. Design techniques, such as diversity and defense-in-depth, can be used to address common-cause failures.

Based upon the IEEE 379-2000 guidance, the operator does not have to be assumed as a common mode failure. This means that an operator only commits one error and not a series of errors. Figure Q3-1 shows that each steam generator has two (2) parallel EFW flow paths with each flow path capable of providing 100% of the required EFW flow. For design basis events which require steam generators available for heat removal, the flow paths through the primary flow control valves (EFW-224A(B)) or backup flow control valves (EFW-223A(B)) would be sufficient to ensure a secondary heat sink. The single failure of the operator would mean that only a single flow path to each steam generator is available but each flow path would have full flow from 3 EFW pumps (~200% capacity). Since sufficient flow is available, there will be no impact to the consequences of a malfunction of a structure, system, or component. Defense in depth still exists because additional operators would be validating plant conditions, procedures direct protecting safety functions, and time would be available to identify and correct errors which all allow the operator to not be considered a common cause failure. The consideration of the operator as a single failure is no different than the single failures already identified in UFSAR Table 10.4-14 (EMERGENCY FEEDWATER SYSTEM FAILURE MODE AND EFFECTS ANALYSIS). This also means the combined impact of removing the EFAS lo-lo (priority open) setpoint actuations and the SG lo-lo level alarms did not impact the possibility of a malfunction.

UFSAR Table 10.4-14 provides the failure modes and effects for the EFW system. The EFW logic change does not introduce any new vulnerabilities not already covered in UFSAR Table 10.4-14. This means that the EFW logic modification did not create the possibility of a malfunction based upon the EFW logic meeting the same regulatory and design requirements.

The design function of the EFAS critical, lo, and lo-lo levels were to prevent an excessive cooldown and an unnecessary safety injection actuation which could complicate an uncomplicated reactor trip or minor event. For this change, Westinghouse analysis DAR-OA-08-6 [Reference 14] determined that the larger and earlier EFW flows would not result in overcooling the reactor coolant system such that an unnecessary safety injection actuation or draining the pressurizer would not occur. Thus, the EFW control scheme design function continues to be met.

One EFW design function is to preclude hydraulic instabilities (water hammer). Waterford 3 Safety Evaluation Report (NUREG-0787) [Reference 32] Section 10.4.7 describes that this design function was met by the physical design of the plant as follows:

> The condensate / feedwater system is designed to preclude the potential for damaging flow instabilities (waterhammer). The feedwater piping is routed in a manner that minimizes its being drained by providing a vertical drop in the piping immediately outside the steam generator feedwater nozzle and by providing two check valves on each line between the steam generators and the feedwater pumps. Further, C-tubes have been provided on the feedwater distribution ring (spargers) which discharge above the spargers to provide further assurance that the feedwater piping remains full. In addition, the applicant has committed to perform preoperational tests utilizing normal plant operating procedures to demonstrate the ability to restore steam generator level following a low level transient without causing unacceptable feedwater / steam generator water hammer. Thus, the guidelines of BTP ASB 10-2, "Design Guidelines for Waterhammer in Steam Generators with Top Feedring Designs," are met.

The replacement steam generators continue to meet the Waterford 3 safety evaluation report requirements. WCAP-17066 [Reference 9] Section 3.0 provides the following description: During normal operation, feedwater enters the steam generator through a spray nozzle equipped feedring located in the steam generator upper shell. The feedring is elevated above the feedwater nozzle to minimize the potential for feedwater thermal stratification at the nozzle location. The spray nozzles feature a top mounted (vented) configuration for water hammer mitigation with small diameter holes to inhibit loose parts ingress into the steam generator.

This is consistent with UFSAR Table 10.4.9.A-2 (sheet 2) which states:

> The Waterford 3 EFS does not throttle flow to avoid water hammer. The EFS will supply on demand sufficient initial flow to assure adequate decay heat removal. Water hammer considerations have been taken into account in the final design.

This means that the EFW control scheme does not have a design function to prevent water hammer because the physical system design performs that function. Thus, this change has no impact on preventing water hammer.

The EFW automatic control system has been analyzed for the larger and earlier EFW flow in Westinghouse letter LTR-SCC-16-017 [Reference 5] and the existing safety analyses were shown to remain bounding. Westinghouse analysis DAR-OA-08-6 [Reference 14] determined that the larger and earlier EFW flows would not result in overcooling the RCS such that an unnecessary safety injection actuation or draining the pressurizer would not occur. Therefore, the proposed change does not create the possibility for a malfunction of a structure, system, or component important to safety with a different result than any previously evaluated in the UFSAR.

7. Result in a design basis limit for a fission product barrier as described in the UFSAR being exceeded or altered? ☐ Yes ☒ No

BASIS:

EC64801 will modify the Emergency Feedwater (EFW) control logic such that the EFW control valves will always be in level control mode once the steam generator critical level is reached. This change impacts the automatic operation of the emergency feedwater (EFW) control system which has an intended design function to provide feedwater to the steam generators as described in UFSAR Section 7.3.1.1.6 and UFSAR Section 10.4.9. This could impact the amount of water and timing of inventory to the steam generators but does not specifically cause the fuel clad, reactor coolant system boundary, or containment to fail. The steam generator inventory does impact the amount of scrubbing the water performs in the radiological analysis which is pertinent to the effectiveness of the fission product barrier. The scrubbing is described as a partition factor (PF) which is used to calculate what fraction of non-gaseous releases remain in the water and what fraction is released to the environment.

Calculation CN-TAS-03-30 [Reference 11] and CN-TAS-03-31 [Reference 12] are the analyses of record for Nuclear Steam Supply System (NSSS) response for the radiological analyses. When the steam generator tubes are covered, a reduction in the amount of radiological releases is allowed since any leak will be submerged so scrubbing of that release is credited. This is reflected by a change in the partition factor used in the radiological dose release calculation. This change will provide full EFW flow at the SG critical level which means that in comparison to the current design, more EFW flow at an earlier time which would be beneficial for the dose accidents because more water would be available at an earlier time to provide scrubbing. This would

reduce the dose consequences. The EFW automatic control system has been analyzed for the larger and earlier EFW flow in Westinghouse letter LTR-SCC-16-017 [Reference 5] and the existing safety analyses were shown to remain bounding. Thus, this change does not adversely affect the fission product boundary.

ECS02-005 (Effects of Uncontrolled EFW on Accident Situations) [Reference 13] evaluates full EFW flow to one steam generator upon an EFW Actuation Signal (EFAS) and demonstrates that the steam generator fill time for full EFW flow provides an acceptable margin for operator action to terminate EFW flow. This event could cause the failure of the main steam piping if the steam piping were to contain water which could provide a direct path outside containment for primary to secondary leakage. Since, ECS02-005 already assumes full EFW flow at EFAS initiation, this change would have no impact on the analysis results because the steam generator critical level is below the EFAS initiation setpoint. Thus, this change does not adversely affect the fission product boundary. This is included as a fission product barrier because failure of the main steam piping due to overfilling could bypass the containment isolation function.

The EFW modification will provide earlier and larger EFW flow which could provide a beneficial impact to the dose consequences and has no impact on the steam generator overfill event. Therefore, the proposed change does not result in a design basis limit for a fission product barrier as described in the UFSAR being exceeded or altered.

8. Result in a departure from a method of evaluation described in the UFSAR used in establishing the design bases or in the safety analyses? ☐ Yes ☒ No

BASIS:

EC64801 will modify the Emergency Feedwater (EFW) control logic such that the EFW control valves will always be in level control mode once the steam generator critical level is reached. Methods of evaluation means the calculational framework used for evaluating behavior or response of the facility or an SSC [Reference 3 Section 3.10].

The UFSAR Section 15.0.3 describes the method of evaluation for the transient and accident analyses. The UFSAR Chapter 15 analyses all continued to use the methods of evaluation already described in the UFSAR.

WCAP-17066 [Reference 9] Appendix D evaluated the loss of feedwater and feedwater line break transients and showed that the feedwater nozzle meets the non-ductile failure requirements. The WCAP-17066 Appendix D analysis used input from the code TRANFLOW in the place of hand calculations to determine heat transfer coefficients used as input into the ASME Code Section III fatigue analysis for the main steam generator feedwater nozzle. Westinghouse letter CWTR3-17-10 [Reference 27] describes that the heat transfer coefficients on the inside surface of the replacement steam generator vessel wall were obtained directly from the results of the TRANFLOW evaluation. The original design basis heat transfer coefficients were calculated using hand calculations and were not explicitly described in the UFSAR.

NEI 96-07 provides questions and answers on 10CFR50.59. CR-WF3-2016-7782 identified that TRANFLOW has not been approved by the NRC for Waterford 3. The following NEI 96-07 question and answer applies to the CR-WF3-2016-7782 condition as it relates to the EFW modification.

> Question A.5. Are detailed design calculations (not contained in the UFSAR), sensitivity studies and preliminary analyses of alternative methods of evaluation for a change

subject to the "methods of evaluation" criterion of 10 CFR 50.59?
Answer A.5. No. Analyses that are not part of the UFSAR and analyses of a preliminary nature are not considered "methods of evaluation" within the scope of 10 CFR 50.59(c)(2)(viii).

The original steam generator heat transfer coefficient calculations are not described in the UFSAR. This means that the change in the steam generator heat transfer coefficient calculations using the TRANFLOW code is not considered a "method of evaluation" within the scope of 10CFR50.59. The use of TRANFLOW to calculate the heat transfer coefficients does not result in a departure from a method of evaluation described in the UFSAR.

The WCAP-17066 Appendix D analysis used the FRMECH code to calculate the critical crack size and stress intensity factors in the non-ductility evaluation per ASME Code Section III Appendix G. The original steam generators were designed and fabricated in conformance with the ASME Code, Section III, 1971 Edition plus Addenda through the Summer of 1971. Appendix G first appeared in the 1972 Summer Addenda of Section III of the ASME Code. EC8458 (Replacement Steam Generators) [Reference 30] updated UFSAR Section 5.4.2 to state that the operating pressure and temperature limits for the steam generator primary side were determined in accordance with the ASME Code, Section III, Appendix G. The UFSAR Sections 3.9.1 and 5.4.2 do not describe a method of evaluation for calculating the critical crack size and stress intensity factors in the non-ductility evaluation of feedwater nozzles. This means that the FRMECH code is not part of the UFSAR and therefore does not result in a departure from a method of evaluation described in the UFSAR.

The WCAP-17066 Appendix D analysis also used the code ANSYS to obtain time varying metal temperatures as input into the structural model to get stresses. NUREG-0787 [Reference 28] Section 3.9.1 (Special Topics for Mechanical Components) addressed the staff review of the ASME code requirements. NUREG-0787 Section 3.9.1 addressed the computer codes used in the analysis as follows:

> Computer programs were used in the analysis of specific components. A list of the computer programs that were used in the dynamic and static analyses to determine the structural and functional integrity of these components is included in the FSAR along with a brief description of each program.

UFSAR Section 3.9.1.2.2.1 (Reactor Coolant System) provides a summary of the applicable computer programs used in the structural analyses for ASME code class 1 systems, components, and supports. The ANSYS computer code is included in UFSAR Section 3.9.1.2.2.1.10 (ANSYS) and is described as follows:

> This is a large-scale, general-purpose, finite element program for linear and nonlinear structural and thermal analysis. This program is in the public domain. Additional descriptive information on this program is provided in Subsection 3.9.1.2.2.2.3.
>
> This program is used for numerous applications for all components in the areas of structural, fatigue, thermal and eigenvalue analysis.

ANSYS was approved by the NRC in NUREG-0787 for this application and is included in the UFSAR Section 3.9.1.2.2.1.10, the use of ANSYS in WCAP-17066 does not result in a departure from a method of evaluation described in the UFSAR.

This change is not impacting the methodology or topical reports used in the UFSAR analyses. The existing UFSAR evaluations utilizing EFW as a mitigating system have not changed. All methods of evaluation remain the same as those currently in the Waterford 3 UFSAR or below

the level of detail contained in the UFSAR. Therefore, the proposed change does not result in a departure from a method of evaluation described in the UFSAR used in establishing the design bases or in the safety analyses.

If any of the above questions is checked "Yes," obtain NRC approval prior to implementing the change by initiating a change to the Operating License in accordance with NMM Procedure EN-LI-103.

I. OVERVIEW / SIGNATURES[1]

Facility: Waterford 3 **Evaluation # / Rev. #:** 17-05 / 0

Proposed Change / Document: EC65206 Waterford 3 Cycle 22 Reload

Description of Change:
Engineering change EC65206 documents the evaluation of the design and performance of the Waterford 3 Cycle 22 reload core and the output documents from the reload process. These changes include the Reload Analysis Report (RAR) [Reference 4], Core Operating Limits Report (COLR), and Updated Final Safety Analysis Report (UFSAR) [Reference 7]. The reload analyses considered changes relative to Cycle 21 which included cycle specific reload core characteristics (i.e., cycle length, loading pattern, power distributions, etc.) and changes in the unit itself that could impact reload analyses. A Licensing Basis Document Change Request (LBDCR) 17-015 has been initiated for the COLR and UFSAR changes.

The Cycle 22 Reload Analysis Report was prepared to document changes in nuclear, thermal-hydraulic, and mechanical design of the reactor core. As such, the reload report provides the bases for the operation of the Cycle 22 fuel design. All analyses and assessments were performed using NRC approved methodologies. No Technical Specification changes were required to implement the Cycle 22 reload.

The Cycle 22 reload core will continue operation with a complete core of the Next Generation Fuel (NGF) Design. There are no plant changes relative to Cycle 21 which impacted the RAR. There are no Reactor Coolant System (RCS) chemistry changes for Cycle 22. Zinc addition will continue for Cycle 22 at a rate similar to that of Cycle 21.

EC65206 Cycle 22 Reload Process Applicability Determination (PAD) identified the following adverse changes.

- Physics Assessment Checklist (PAC) exception for the Loss of Coolant Accident (LOCA) Unrodded Pin Census
- PAC exception for the LOCA Hot Rod Minimum Pin-to-Box Ratio
- PAC exception for the Radial Power Falloff
- Revised Control Element Assembly (CEA) Ejection and Sheared Shaft / Seized Rotor Analysis of Record (AOR)
- Lead Use Assemblies (LUAs)

This 50.59 evaluation addresses the adverse changes identified in the PAD.

[1] Signatures may be obtained via electronic processes (e.g., PCRS, ER processes), manual methods (e.g., ink signature), e-mail, or telecommunication. If using an e-mail or telecommunication, attach it to this form.

Summary of Evaluation:
Engineering change EC65206 documents the evaluation of the design and performance of the Waterford 3 Cycle 22 reload core and the output documents from the reload process. These changes include the Reload Analysis Report (RAR) [Reference 4], Core Operating Limits Report (COLR), and Updated Final Safety Analysis Report (UFSAR) [Reference 7]. The reload analyses considered changes relative to Cycle 21 which included cycle specific reload core characteristics (i.e., cycle length, loading pattern, power distributions, etc.) and changes in the unit itself that could impact reload analyses.

The Cycle 22 Reload Analysis Report was prepared to document changes in nuclear, thermal-hydraulic, and mechanical design of the reactor core. As such, the reload report provides the bases for the operation of the Cycle 22 fuel design. All analyses and assessments were performed using NRC approved methodologies. No Technical Specification changes were required to implement the Cycle 22 reload.

EC65206 Cycle 22 Reload Process Applicability Determination (PAD) identified the following adverse changes. Each of the Process Applicability Determination (PAD) adverse changes are evaluated and are shown to be acceptable.

PAC exception for the LOCA Unrodded Pin Census - A bounding core pin census was used in the bounding LBLOCA core-wide oxidation analysis performed for Next Generation Fuel (NGF). The core pin census did not bound the Cycle 22 specific data. Therefore, the limiting Large Break LOCA (LBLOCA) case from the AOR was evaluated using the Cycle 22 specific core pin census and minimum hot rod pin-to-box ratio data together with the Cycle 22 specific maximum integrated radial peaking factor and the minimum X-factor for rod-to-rod radiation heat transfer. The comparison of results demonstrated that the bounding LBLOCA AOR peak cladding temperature (PCT), maximum cladding oxidation (MCO) and maximum core-wide oxidation (CWO) results remained bounding compared to the Cycle 22 specific results. Therefore, the Cycle 22 PAC exception for core pin census does not impact the continued applicability of the bounding LBLOCA AOR to Cycle 22. As required per 10CFR50.46, a description of how the LOCA PAC exceptions were addressed will be provided in the 10CFR50.46 yearly report to the NRC for Waterford 3 for Cycle 22 operation.

PAC exception for the LOCA Hot Rod Minimum Pin-to-Box Ratio – A bounding minimum hot rod pin-to-box ratio was used in the bounding LBLOCA core-wide oxidation analysis performed for NGF. The minimum hot rod pin-to-box ratio did not bound the Cycle 22 specific data. Therefore, the limiting LBLOCA case from the AOR was evaluated using the Cycle 22 specific core pin census and minimum hot rod pin-to-box ratio data together with the Cycle 22 specific maximum integrated radial peaking factor and the minimum X-factor for rod-to-rod radiation heat transfer. The comparison of results demonstrated that the bounding LBLOCA AOR PCT, MCO and CWO results remained bounding compared to the Cycle 22 specific results. Therefore, the Cycle 22 PAC exception for core pin census does not impact the continued applicability of the bounding LBLOCA AOR to Cycle 22. As required per 10CFR50.46, a description of how the LOCA PAC exceptions were addressed will be provided in the 10CFR50.46 yearly report to the NRC for Waterford 3 for Cycle 22 operation.

PAC exception for the Radial Power Falloff - This parameter is used in the Fuel Performance analysis to provide a conservative power profile for the pseudo hot pin model. The radial falloff curves that incorporate Thermal Conductivity Degradation (TCD) were found to be in violation using the original PAC data. For Cycle 22 ZrB2 fuel, there were short-term power violations to generate Radial Power Fall-Offs (RFOs) on a kW/ft basis so it was necessary to perform

FATES3B calculations with the cycle-specific short-term RFOs. To reduce conservatisms, the cycle specific short-term axial shapes generated were credited. The cycle-specific calculations for Waterford-3 Cycle 22 Short End Point (SEP) and Long End Point (LEP) yielded lower centerline temperatures than the AOR. This centerline temperature confirmation shows that the TCD allowance has been preserved and the AOR Fuel Performance results remain applicable for Cycle 22.

Revised Control Element Assembly (CEA) Ejection and Sheared Shaft / Seized Rotor Analysis of Record (AOR) – The CEA ejection and single reactor coolant pump shaft seizure events were reanalyzed to incorporate a 0.8 second CEA holding coil delay time. The CEA group average insertion drop time versus time curve for the zero and five percent CEA insertion points were changed from 0.6 to 0.8 seconds and from 0.95 to 1.00 seconds, respectively. This was done to provide additional margin in the PAC data for the CEA ejection and single RCS shaft seizure calculated fuel failure results to accommodate a measured holding coil delay time of 0.8 seconds during startup testing. New PAC CEA ejection power dependent DNB and deposited energy event statepoints and single RCS sheared shaft DNB event statepoint were generated. These statepoints were incorporated into the PAC. The Cycle 22 calculated DNB fuel failures for the CEA ejection and single RCS sheared shaft events remain below their limiting values. The CEA ejection power dependent deposited energy limits are met since final post-ejected Fq versus ejected worth values remain below their limits.

Lead Use Assemblies - The Waterford-3 Cycle 22 core design incorporates eight (8) Lead Use Assemblies (LUAs). The LUAs changes were submitted to the NRC in WCAP-16500-P-A [Reference 12] and were approved by the NRC [Reference 13]. These assemblies, designated as sub-batch GU, use the CE 16x16 NGF fuel design with the following changes to the grids to increase the robustness of the design.

- A Modified Outer Strap (MOS) to add grid-to-rod-fretting margin on peripheral row fuel rods;
- A grid strap manufactured using Longitudinal Stamping (LS) to align with Westinghouse fuel production and operating experience; and
- An additional Outer Strap Tab (OST) to the center of the outer strap to aid in disrupting crud deposition on two of the peripheral row fuel rods.

From a neutronics perspective, the LUAs are identical to the remaining CE 16x16 NGF fuel assemblies loaded in the core due to how the assembly grids are modeled in ANC and PARAGON. Specifically, grids are modeled as being smeared over the entire fuel assembly resulting in an approximation that loses all axial spatial flux weighting of the grids. This has been proven to provide sufficient neutronic accuracy. Additionally, the grids are manufactured using zirconium alloys which are relatively neutronically unimportant. Thus, the LUAs are modeled as being identical to the CE 16x16 NGF fuel assemblies loaded in the core.

The LUA design contains the changes associated with the implementation of the Modified Outer Strap (MOS) to add grid-to-rod fretting margin on the peripheral row fuel rods, the transition to longitudinal stamping (LS) to increase margin against cracking, and the addition of an Outer Strap Tab (OST) to the center of the outer strap which aids in disrupting crud deposition on the peripheral row fuel rods.

All assemblies have the same GUARDIAN grid design at the bottom; therefore the corresponding uniform inlet flow distribution was used in the T-H analysis. The WSSV-T and ABB-NV correlations and associated DNBR limits are applicable to MOS NGF design as the difference in mid-grids is small. The T-H analysis of Cycle 22 determined that the MOS NGF LUA assemblies were not limiting.

There are 8 LUAs that are incorporated into the Cycle 22 fuel management, and these LUAs are not limiting as compared to the remaining CE 16x16 NGF assemblies. Since the 8 LUAs are not limiting, and all input to the Non-LOCA transient analyses remains the same; there is no impact on the Non-LOCA Safety Analysis CCL and no impact for Cycle 22.

There are 8 LUAs that are incorporated into the Cycle 22 fuel management and these LUAs are not limiting as compared to the remaining CE 16x16 NGF assemblies. Since the 8 LUAs are not limiting and all input to the ECCS Performance AORs remains the same, there is no impact on the ECCS Performance CCL and no impact for Cycle 22.

The 10CFR50.59 evaluation demonstrated that this change is acceptable. Each of the 8 questions specifically addressed the proposed change and associated impacts.

References

1. Waterford 3 Updated Final Safety Analysis Report, Through Amendment 309.
2. Waterford 3 Technical Specification, Through Amendment 249.
3. NEI 96-07 Revision 1, Guidelines for 10CFR50.59 Implementation, November 2000.
4. NF-WTFD-17-6 Revision 1, Waterford 3 Cycle 22 Final Reload Analysis Report, April 27, 2017.
5. NF-WTFD-16-13, Waterford 3 Cycle 22 Final Core Design Report, May 17, 2016.
6. NF-WTFD-17-18, Refueling Boron Concentration and Instrumented Assembly Burnup for Waterford 3 Cycle 22, March 22, 2017.
7. NF-WTFD-17-11, Recommended Final Safety Analysis Report Markups for Waterford 3 Cycle 22, March 1, 2017.
8. CN-SCC-14-004 Revision 1, Waterford 3 Control Element Assembly Ejection Analysis for Revised CEA SCRAM Insertion Curve, December 14, 2016.
9. CN-WTR322-012 Revision 0, Confirmation of Radial Fall-Off Limits with TCD Penalty for Waterford 3 Cycle 22, October 6, 2016.
10. WCAP-16500-P-A Revision 0, CE 16x16 Next Generation Fuel Core Reference Report, August 2007.
11. WCAP-16500-P-A Supplement 1 Revision 1, Application of CE Setpoint Methodology for CE 16x16 Next Generation Fuel, December 2010.
12. WCAP-16500-P-A Supplement 2, Evolutionary Design Changes to CE 16x16 Next Generation Fuel and Method for Addressing the Effects of End-of-Life Properties on Seismic and Loss of Coolant Accident Analyses, June 2016.
13. NRC Final Safety Evaluation for Topical Report WCAP-16500-P/WCAP-16500-NP Supplement 2, Evolutionary Design Changes to CE 16x16 Next Generation Fuel and Method for Addressing the Effects of End-of-Life Properties on Seismic and Loss of Coolant Accident Analyses, June 21, 2016.
14. NRC Information Notice 2012-09, Irradiation Effects on Fuel Assembly Spacer Grid Crush Strength, June 28, 2012.

Is the validity of this Evaluation dependent on any other change? ☐ **Yes** ☒ **No**

If "Yes," list the required changes/submittals. The changes covered by this 50.59 Evaluation cannot be implemented without approval of the other identified changes (e.g., license amendment request). Establish an appropriate notification mechanism to ensure this action is completed.

Based on the results of this 50.59 Evaluation, does the proposed change require prior NRC approval? ☐ **Yes** ☒ **No**

Preparer: William Steelman / EC65206 for Signature / SMI / Engineering / 4-18-17
Name (print) / Signature / Company / Department / Date

Reviewer: Chris Eastus / EC65206 for Signature / Entergy / Fuels / 4-24-17
Name (print) / Signature / Company / Department / Date

OSRC: Brian Lanka / EC65206 for Signature / 5-6-17
Chairman's Name (print) / Signature / Date

17-10
OSRC Meeting #

II. 50.59 EVALUATION

Does the proposed Change being evaluated represent a change to a method of evaluation ONLY? If "Yes," Questions 1 – 7 are not applicable; answer only Question 8. If "No," answer all questions below.

☐ Yes
☒ No

Does the proposed Change:

1. Result in more than a minimal increase in the frequency of occurrence of an accident previously evaluated in the UFSAR?

☐ Yes
☒ No

BASIS:

Engineering change EC65206 documents the evaluation of the design and performance of the Waterford 3 Cycle 22 reload core and the output documents from the reload process. EC65206 Cycle 22 Reload Process Applicability Determination (PAD) identified the following adverse changes.

- Physics Assessment Checklist (PAC) exception for the Loss of Coolant Accident (LOCA) Unrodded Pin Census
- PAC exception for the LOCA Hot Rod Minimum Pin-to-Box Ratio
- PAC exception for the Radial Power Falloff
- Revised Control Element Assembly (CEA) Ejection and Sheared Shaft / Seized Rotor Analysis of Record (AOR)
- Lead Use Assemblies (LUAs)

The LOCA unrodded pin census and minimum pin-to-box ratio relates to UFSAR Section 15.6.3.3 (Loss of Coolant Accident) analysis. The PAC parameters do not impact the occurrence of the accident but is relevant to the accident results and severity.

The sheared shaft / seized rotor calculation change relates to UFSAR Section 15.3.3.1 (Single Reactor Coolant Pump Shaft Seizure / Sheared Shaft). The sheared shaft / seized rotor reanalysis does not impact the occurrence of the accident but is relevant to the accident results and severity.

The CEA Ejection calculation change relates to UFSAR Section 15.4.3.2 (CEA Ejection Accident). The CEA Ejection reanalysis does not impact the occurrence of the accident but is relevant to the accident results and severity.

The radial power falloff is used in the fuel performance analysis to provide a conservative power profile for the pseudo hot pin model. The radial power falloff does not impact the occurrence of the accident but is relevant to the accident results and severity.

The lead use assemblies were submitted to the NRC in WCAP-16500-P-A [Reference 12] and were approved by the NRC [Reference 13]. The fuel by itself does not initiate any events but is relevant to the accident results and severity.

The UFSAR Chapter 15 assumes specific accidents occur. The reload analysis evaluates the impact of reload related parameters on the severity of the accident to ensure the results remain within predetermined limits. The adverse changes identified in the EC65206 PAD have no impact on the frequency of occurrence only the consequences.

In addition, no changes to plant equipment are required due to the Cycle 22 fuel design. The proposed change does not create any new system interactions that could cause an accident.

Therefore, the proposed change does not result in more than a minimal increase in the frequency of occurrence of an accident previously evaluated in the UFSAR.

2. Result in more than a minimal increase in the likelihood of occurrence of a malfunction of a structure, system, or component important to safety previously evaluated in the UFSAR? ☐ Yes ☒ No

BASIS:

The Batch GG reload fuel assemblies are acceptable for use in Waterford 3 Cycle 22. There is acceptable mechanical design margin for the Cycle 22 core containing Batch GG fuel assemblies and other resident fuel batches. The Batch GG fuel assemblies meet all required design and functional requirements. The nuclear design of Batch GG fuel was accomplished using NRC approved analysis methodologies under approved quality assurance programs. The performance of the Batch GG assemblies is not expected to be significantly different than previous fuel batches. The probability of fuel failure due to mechanical or flow induced vibration and fretting with the spacer grids [UFSAR 4.2.1.2.1.g, 4.2.3.1.1, 4.2.3.1.3, 4.2.3.2.1 and 4.2.3.2.4] will not be increased.

The dimensions and placement of the guide tubes in the Batch GG fuel assemblies are the same as Batch EE fuel assemblies, and as such, there are no compatibility issues with CEAs.

The Cycle 22 fuel and core designs will not degrade the performance of any safety system assumed to function in the safety analyses, nor will these changes decrease the reliability of safety systems. Instrumentation accuracy or response characteristics will not be impacted.

All equipment important to safety will function in the same manner with the Cycle 22 reload core as with the previous core. There is no characteristic of the Cycle 22 core, with the Batch GG reload assemblies, that would increase the probability of a malfunction of equipment important to safety. Therefore, the likelihood of occurrence of a malfunction of an SSC important to safety is not increased due to Cycle 22 core reload.

3. Result in more than a minimal increase in the consequences of an accident previously evaluated in the UFSAR? ☐ Yes ☒ No

BASIS:

Engineering change EC65206 documents the evaluation of the design and performance of the Waterford 3 Cycle 22 reload core and the output documents from the reload process. EC65206 Cycle 22 Reload Process Applicability Determination (PAD) identified the following adverse changes.

- Physics Assessment Checklist (PAC) exception for the Loss of Coolant Accident (LOCA) Unrodded Pin Census
- PAC exception for the LOCA Hot Rod Minimum Pin-to-Box Ratio
- PAC exception for the Radial Power Falloff
- Revised Control Element Assembly (CEA) Ejection and Sheared Shaft / Seized Rotor Analysis of Record (AOR)
- Lead Use Assemblies (LUAs)

Each of the Process Applicability Determination (PAD) adverse changes are evaluated and are shown to be acceptable.

PAC exception for the LOCA Unrodded Pin Census - A bounding core pin census was used in the bounding LBLOCA core-wide oxidation analysis performed for Next Generation Fuel

(NGF). The core pin census did not bound the Cycle 22 specific data. Therefore, the limiting Large Break LOCA (LBLOCA) case from the AOR was evaluated using the Cycle 22 specific core pin census and minimum hot rod pin-to-box ratio data together with the Cycle 22 specific maximum integrated radial peaking factor and the minimum X-factor for rod-to-rod radiation heat transfer. The comparison of results demonstrated that the bounding LBLOCA AOR peak cladding temperature (PCT), maximum cladding oxidation (MCO) and maximum core-wide oxidation (CWO) results remained bounding compared to the Cycle 22 specific results. Therefore, the Cycle 22 PAC exception for core pin census does not impact the continued applicability of the bounding LBLOCA AOR to Cycle 22.

PAC exception for the LOCA Hot Rod Minimum Pin-to-Box Ratio – A bounding minimum hot rod pin-to-box ratio was used in the bounding LBLOCA core-wide oxidation analysis performed for NGF. The minimum hot rod pin-to-box ratio did not bound the Cycle 22 specific data. Therefore, the limiting LBLOCA case from the AOR was evaluated using the Cycle 22 specific core pin census and minimum hot rod pin-to-box ratio data together with the Cycle 22 specific maximum integrated radial peaking factor and the minimum X-factor for rod-to-rod radiation heat transfer. The comparison of results demonstrated that the bounding LBLOCA AOR PCT, MCO and CWO results remained bounding compared to the Cycle 22 specific results. Therefore, the Cycle 22 PAC exception for core pin census does not impact the continued applicability of the bounding LBLOCA AOR to Cycle 22.

PAC exception for the Radial Power Falloff - This parameter is used in the Fuel Performance analysis to provide a conservative power profile for the pseudo hot pin model. The radial falloff curves that incorporate Thermal Conductivity Degradation (TCD) were found to be in violation using the original PAC data. For Cycle 22 ZrB2 fuel, there were short-term power violations to generate Radial Power Fall-Offs (RFOs) on a kW/ft basis so it was necessary to perform FATES3B calculations with the cycle-specific short-term RFOs. To reduce conservatisms, the cycle specific short-term axial shapes generated were credited. The cycle-specific calculations for Waterford-3 Cycle 22 Short End Point (SEP) and Long End Point (LEP) yielded lower centerline temperatures than the AOR. This centerline temperature confirmation shows that the TCD allowance has been preserved and the AOR Fuel Performance results remain applicable for Cycle 22.

Revised Control Element Assembly (CEA) Ejection and Sheared Shaft / Seized Rotor Analysis of Record (AOR) – The CEA ejection and single reactor coolant pump shaft seizure events were reanalyzed to incorporate a 0.8 second CEA holding coil delay time. The CEA group average insertion drop time versus time curve for the zero and five percent CEA insertion points were changed from 0.6 to 0.8 seconds and from 0.95 to 1.00 seconds, respectively. This was done to provide additional margin in the PAC data for the CEA ejection and single RCS shaft seizure calculated fuel failure results to accommodate a measured holding coil delay time of 0.8 seconds during startup testing. New PAC CEA ejection power dependent DNB and deposited energy event statepoints and single RCS sheared shaft DNB event statepoint were generated. These statepoints were incorporated into the PAC. The Cycle 22 calculated DNB fuel failures for the CEA ejection and single RCS sheared shaft events remain below their limiting values. The sheared shaft/seized rotor event Cycle 22 maximum fuel failure was 6.72% with a limit of 15%. The CEA ejection event Cycle 22 maximum fuel failure was 9.23% with a limit of 15%. The CEA ejection power dependent deposited energy limits are met since final post-ejected Fq versus ejected worth values remain below their limits.

Lead Use Assemblies - The Waterford-3 Cycle 22 core design incorporates eight (8) Lead Use Assemblies (LUAs). The LUAs changes were submitted to the NRC in WCAP-16500-P-A [Reference 12] and were approved by the NRC [Reference 13]. These assemblies, designated as sub-batch GU, use the CE 16x16 NGF fuel design with the following changes to the grids to increase the robustness of the design.

- A Modified Outer Strap (MOS) to add grid-to-rod-fretting margin on peripheral row fuel rods;
- A grid strap manufactured using Longitudinal Stamping (LS) to align with Westinghouse fuel production and operating experience; and
- An additional Outer Strap Tab (OST) to the center of the outer strap to aid in disrupting crud deposition on two of the peripheral row fuel rods.

From a neutronics perspective, the LUAs are identical to the remaining CE 16x16 NGF fuel assemblies loaded in the core due to how the assembly grids are modeled in ANC and PARAGON. Specifically, grids are modeled as being smeared over the entire fuel assembly resulting in an approximation that loses all axial spatial flux weighting of the grids. This has been proven to provide sufficient neutronic accuracy. Additionally, the grids are manufactured using zirconium alloys which are relatively neutronically unimportant. Thus, the LUAs are modeled as being identical to the CE 16x16 NGF fuel assemblies loaded in the core.

The LUA design contains the changes associated with the implementation of the Modified Outer Strap (MOS) to add grid-to-rod fretting margin on the peripheral row fuel rods, the transition to longitudinal stamping (LS) to increase margin against cracking, and the addition of an Outer Strap Tab (OST) to the center of the outer strap which aids in disrupting crud deposition on the peripheral row fuel rods.

All assemblies have the same GUARDIAN grid design at the bottom; therefore the corresponding uniform inlet flow distribution was used in the T-H analysis. The WSSV-T and ABB-NV correlations and associated DNBR limits are applicable to MOS NGF design as the difference in mid-grids is small. The T-H analysis of Cycle 22 determined that the MOS NGF LUA assemblies were not limiting.

There are 8 LUAs that are incorporated into the Cycle 22 fuel management, and these LUAs are not limiting as compared to the remaining CE 16x16 NGF assemblies. Since the 8 LUAs are not limiting, and all input to the Non-LOCA transient analyses remains the same; there is no impact on the Non-LOCA Safety Analysis CCL and no impact for Cycle 22.

There are 8 LUAs that are incorporated into the Cycle 22 fuel management and these LUAs are not limiting as compared to the remaining CE 16x16 NGF assemblies. Since the 8 LUAs are not limiting and all input to the ECCS Performance AORs remains the same, there is no impact on the ECCS Performance CCL and no impact for Cycle 22.

When determining which activities represent "more than a minimal increase in consequences" pursuant to 10 CFR 50.59, it must be recognized that "consequences" means dose. Therefore, an increase in consequences must involve an increase in radiological doses to the public or to control room operators. All of the adverse conditions were evaluated to ensure their dose consequences did not increase above their limits. The sheared shaft/seized rotor event Cycle 22 maximum fuel failure was 6.72% with a limit of 15%. The CEA ejection event Cycle 22 maximum fuel failure was 9.23% with a limit of 15%. The LOCA unrodded pin census and pin-

to-box ratio were demonstrated to remain bounded by their AOR. The radial falloff cycle specific analysis yielded lower centerline temperatures than the AOR. The LUAs were demonstrated to not adversely impact the accident analyses. Therefore, the proposed change does not result in more than a minimal increase in the consequences of an accident previously evaluated in the UFSAR.

4. Result in more than a minimal increase in the consequences of a malfunction of a structure, system, or component important to safety previously evaluated in the UFSAR? ☐ Yes ☒ No

BASIS:

The Waterford 3 Cycle 22 reload safety analyses were performed to assure that acceptance criteria are met for fuel performance, thermal-hydraulic performance, LOCA ECCS performance and non-LOCA transient response. These analyses confirm that the Cycle 22 core can be operated safely and can be expected to meet license requirements for accident response. The function and duty of SSCs important to safety as assumed in the safety analyses is not altered. The Cycle 22 analyses do not place greater reliance on any specific plant system, structure, or component to perform a safety function. No changes in the assumptions concerning equipment availability or failure modes have been made and none are necessary to implement Cycle 22.

The Waterford-3 Cycle 22 core design incorporates eight (8) Lead Use Assemblies (LUAs). The LUAs changes were submitted to the NRC in WCAP-16500-P-A [Reference 12] and were approved by the NRC [Reference 13]. These assemblies, designated as sub-batch GU, use the CE 16x16 NGF fuel design with the following changes to the grids to increase the robustness of the design.

- A Modified Outer Strap (MOS) to add grid-to-rod-fretting margin on peripheral row fuel rods;
- A grid strap manufactured using Longitudinal Stamping (LS) to align with Westinghouse fuel production and operating experience; and
- An additional Outer Strap Tab (OST) to the center of the outer strap to aid in disrupting crud deposition on two of the peripheral row fuel rods.

From a neutronics perspective, the LUAs are identical to the remaining CE 16x16 NGF fuel assemblies loaded in the core due to how the assembly grids are modeled in ANC and PARAGON. Specifically, grids are modeled as being smeared over the entire fuel assembly resulting in an approximation that loses all axial spatial flux weighting of the grids. This has been proven to provide sufficient neutronic accuracy. Additionally, the grids are manufactured using zirconium alloys which are relatively neutronically unimportant. Thus, the LUAs are modeled as being identical to the CE 16x16 NGF fuel assemblies loaded in the core.

The LUA design contains the changes associated with the implementation of the Modified Outer Strap (MOS) to add grid-to-rod fretting margin on the peripheral row fuel rods, the transition to longitudinal stamping (LS) to increase margin against cracking, and the addition of an Outer Strap Tab (OST) to the center of the outer strap which aids in disrupting crud deposition on the peripheral row fuel rods.

All assemblies have the same GUARDIAN grid design at the bottom; therefore the corresponding uniform inlet flow distribution was used in the T-H analysis. The WSSV-T and ABB-NV correlations and associated DNBR limits are applicable to MOS NGF design as the difference in mid-grids is small. The T-H analysis of Cycle 22 determined that the MOS NGF LUA assemblies were not limiting.

There are 8 LUAs that are incorporated into the Cycle 22 fuel management, and these LUAs are not limiting as compared to the remaining CE 16x16 NGF assemblies. Since the 8 LUAs are not limiting, and all input to the Non-LOCA transient analyses remains the same; there is no impact on the Non-LOCA Safety Analysis CCL and no impact for Cycle 22.

There are 8 LUAs that are incorporated into the Cycle 22 fuel management and these LUAs are not limiting as compared to the remaining CE 16x16 NGF assemblies. Since the 8 LUAs are not limiting and all input to the ECCS Performance AORs remains the same, there is no impact on the ECCS Performance CCL and no impact for Cycle 22.

When determining which activities represent "more than a minimal increase in consequences" pursuant to 10 CFR 50.59, it must be recognized that "consequences" means dose. Therefore, an increase in consequences must involve an increase in radiological doses to the public or to control room operators. The LUAs were demonstrated to not adversely impact the accident analyses. This means there is no impact to the dose analysis and not increase in malfunction consequences.

Thus, there is no increase in the consequences of a malfunction of a structure, system, or component important to safety previously evaluated in the UFSAR by the Cycle 22 reload.

5. Create a possibility for an accident of a different type than any previously evaluated in the UFSAR? ☐ Yes ☒ No

BASIS:

The Batch GG fuel assemblies of the Cycle 22 core meet all required design and functional requirements. The nuclear design of Batch GG fuel was accomplished using NRC approved analysis methodologies under approved quality assurance programs. The performance of the Batch GG assemblies is not expected to be significantly different than previous fuel batches. The Cycle 22 reload core will not result in changes to the radiological release rate/duration, will not create new release mechanisms, and will not impact radiation release barriers. There are no new system interactions or connections associated with the Cycle 22 core reload.

The Waterford-3 Cycle 22 core design incorporates eight (8) Lead Use Assemblies (LUAs). The LUAs changes were submitted to the NRC in WCAP-16500-P-A [Reference 12] and were approved by the NRC [Reference 13]. These assemblies, designated as sub-batch GU, use the CE 16x16 NGF fuel design with the following changes to the grids to increase the robustness of the design.

- A Modified Outer Strap (MOS) to add grid-to-rod-fretting margin on peripheral row fuel rods;
- A grid strap manufactured using Longitudinal Stamping (LS) to align with Westinghouse fuel production and operating experience; and
- An additional Outer Strap Tab (OST) to the center of the outer strap to aid in disrupting crud deposition on two of the peripheral row fuel rods.

From a neutronics perspective, the LUAs are identical to the remaining CE 16x16 NGF fuel assemblies loaded in the core due to how the assembly grids are modeled in ANC and PARAGON. Specifically, grids are modeled as being smeared over the entire fuel assembly resulting in an approximation that loses all axial spatial flux weighting of the grids. This has been proven to provide sufficient neutronic accuracy. Additionally, the

grids are manufactured using zirconium alloys which are relatively neutronically unimportant. Thus, the LUAs are modeled as being identical to the CE 16x16 NGF fuel assemblies loaded in the core.

The LUA design contains the changes associated with the implementation of the Modified Outer Strap (MOS) to add grid-to-rod fretting margin on the peripheral row fuel rods, the transition to longitudinal stamping (LS) to increase margin against cracking, and the addition of an Outer Strap Tab (OST) to the center of the outer strap which aids in disrupting crud deposition on the peripheral row fuel rods.

All assemblies have the same GUARDIAN grid design at the bottom; therefore the corresponding uniform inlet flow distribution was used in the T-H analysis. The WSSV-T and ABB-NV correlations and associated DNBR limits are applicable to MOS NGF design as the difference in mid-grids is small. The T-H analysis of Cycle 22 determined that the MOS NGF LUA assemblies were not limiting.

There are 8 LUAs that are incorporated into the Cycle 22 fuel management, and these LUAs are not limiting as compared to the remaining CE 16x16 NGF assemblies. Since the 8 LUAs are not limiting, and all input to the Non-LOCA transient analyses remains the same; there is no impact on the Non-LOCA Safety Analysis CCL and no impact for Cycle 22.

There are 8 LUAs that are incorporated into the Cycle 22 fuel management and these LUAs are not limiting as compared to the remaining CE 16x16 NGF assemblies. Since the 8 LUAs are not limiting and all input to the ECCS Performance AORs remains the same, there is no impact on the ECCS Performance CCL and no impact for Cycle 22.

There were no changes in the failure modes of equipment important to safety assumed in the design and analyses associated with the Cycle 22 reload. No initiators of any of the accidents already postulated are impacted by the Cycle 22 reload. Therefore, operation of Waterford 3 with the Cycle 22 core will not cause an accident of a different type than any previously evaluated in the UFSAR.

6. Create a possibility for a malfunction of a structure, system, or component important to safety with a different result than any previously evaluated in the UFSAR? ☐ Yes ☒ No

BASIS:
Installation of the Cycle 22 core will not cause the possibility of a malfunction of equipment important to safety of a different type than any previously evaluated in the UFSAR. Equipment important to safety will function in the same manner with the Cycle 22 core as with the Cycle 21 core. The impact of changes in core characteristics on any parameter that would affect the function of equipment important to safety has been accounted for in the analyses applicable for Cycle 22.

The Waterford 3 testing and verification program ensures that all required calibrations and setpoint changes resulting from the Cycle 22 reload design are performed. There are no new modes of failure associated with any of the changes for Cycle 22. No changes in the failure modes of the equipment important to safety were assumed in the Cycle 22 core design or fuel mechanical analyses. No changes due to the Cycle 22 reload analysis will significantly alter the way in which Waterford 3 operates.

Based on the above, the possibility of a malfunction of equipment important to safety having a different result than any previously evaluated will not be created due to the fuel management, reload fuel assembly design changes, or other reload-related changes necessary to operate Cycle 22.

7. Result in a design basis limit for a fission product barrier as described in the UFSAR being exceeded or altered? ☐ Yes ☒ No

BASIS:

The Waterford 3 Cycle 22 reload safety analyses were performed to assure that acceptance criteria are met for fuel performance, thermal-hydraulic performance, LOCA ECCS performance and non-LOCA response. These analyses confirm that the core can be operated safely and can be expected to meet license requirements for accident response. The Cycle 22 reload safety analyses were performed to demonstrate compliance with the existing design basis limits for the fuel cladding, Reactor Coolant System (RCS) pressure boundary, and containment.

A bounding core pin census and hot rod minimum pin-to-box ratio were used in the bounding LBLOCA core-wide oxidation analysis performed for Next Generation Fuel (NGF). The core pin census and hot rod minimum pin-to-box ratio did not bound the Cycle 22 specific data. Therefore, the limiting Large Break LOCA (LBLOCA) case from the AOR was evaluated using the Cycle 22 specific core pin census and minimum hot rod pin-to-box ratio data together with the Cycle 22 specific maximum integrated radial peaking factor and the minimum X-factor for rod-to-rod radiation heat transfer. The comparison of results demonstrated that the bounding LBLOCA AOR peak cladding temperature (PCT), maximum cladding oxidation (MCO) and maximum core-wide oxidation (CWO) results remained bounding compared to the Cycle 22 specific results. UFSAR Section 15.6.3.3 (Loss of Coolant Accident) event results remain based upon the AOR and bounds the Cycle 22 results.

The CEA ejection and single reactor coolant pump shaft seizure events were reanalyzed to incorporate a 0.8 second CEA holding coil delay time. The CEA group average insertion drop time versus time curve for the zero and five percent CEA insertion points were changed from 0.6 to 0.8 seconds and from 0.95 to 1.00 seconds, respectively. This was done to provide additional margin in the PAC data for the CEA ejection and single RCS shaft seizure calculated fuel failure results to accommodate a measured holding coil delay time of 0.8 seconds during startup testing. New PAC CEA ejection power dependent DNB and deposited energy event statepoints and single RCS sheared shaft DNB event statepoint were generated. These statepoints were incorporated into the PAC. The Cycle 22 calculated DNB fuel failures for the CEA ejection and single RCS sheared shaft events remain below their limiting values. The sheared shaft/seized rotor event Cycle 22 maximum fuel failure was 6.72% with a limit of 15%. The CEA ejection event Cycle 22 maximum fuel failure was 9.23% with a limit of 15%. The CEA ejection power dependent deposited energy limits are met since final post-ejected Fq versus ejected worth values remain below their limits. UFSAR Section 15.3.3.1 (Single Reactor Coolant Pump Shaft Seizure / Sheared Shaft) and UFSAR Section 15.4.3.2 (CEA Ejection Accident) event results remain based upon the AORs and bounds the Cycle 22 results.

All events have been evaluated in the reload analysis to assure that they meet their respective criterion for Cycle 22. Based on a review of the reload analysis results, the design basis and regulatory limits for the fuel cladding, RCS pressure boundary, and containment will not be exceeded for Cycle 22.

8. Result in a departure from a method of evaluation described in the UFSAR used in establishing the design bases or in the safety analyses? ☐ Yes ☒ No

BASIS:

Method of evaluation means the calculational framework used for evaluating behavior or response of the facility or an SSC [Reference 3 Section 3.10]. In accordance with Technical Specification 6.9.1.11.1, the Cycle 22 core was designed and evaluated using NRC approved analysis methodology under an approved quality assurance program. No new methodologies were required to verify that previous safety analyses are applicable to Cycle 22 or to perform reanalysis of any events.

The Waterford-3 Cycle 22 core design incorporates eight (8) Lead Use Assemblies (LUAs). The LUAs changes were submitted to the NRC in WCAP-16500-P-A [Reference 12] and were approved by the NRC [Reference 13]. The NRC WCAP-16500-P-A Supplement 2 Safety Evaluation Report [Reference 13] Section 4 contained three (3) limitations/conditions for the approval. Each condition is evaluated to ensure compliance.

Condition 1. CE 16x16 NGF spacer grids fabricated using the Longitudinal Stamping (LS) procedure must also apply the Modified Outer Strap (MOS) design change. Intermediate Flow-Mixing (IFM) grids for which the MOS design change is not applicable may be fabricated using LS, since the effects on GTRF margin do not challenge any safety analyses or design criterion.

Condition 1 Resolution. The Waterford 3 Cycle 22 core design incorporates eight (8) Lead Use Assemblies (LUAs). These assemblies, designated as sub-batch GU, use the CE 16x16 NGF fuel design and all LUAs use a Modified Outer Strap (MOS) to add grid-to-rod-fretting margin on peripheral row fuel rods and a grid strap manufactured using Longitudinal Stamping (LS) to align with Westinghouse fuel production and operating experience. The use of MOS and LS together meets the condition 1 requirement.

Condition 2. Any changes or combinations of changes approved in this safety evaluation shall be analyzed and explicitly accounted for according to approved licensed methodologies prior to implementation.

Condition 2 Resolution: The Waterford 3 Cycle 22 core design incorporates eight (8) LUAs. The LUAs were evaluated in the Cycle 22 Reload Analysis Report [Reference 3] using existing approved methodologies. The core design, mechanical design, fuel performance, thermal-hydraulic, physics, non-LOCA, and LOCA analyses all explicitly evaluated the impact LUAs on Cycle 22. The Waterford 3 Cycle 22 Reload Analysis Report validates condition 2 requirement is met.

Condition 3. Licensees may not reference the proposed approach to address IN 2012-09 detailed in the Supplement 2 to WCAP-16500-P/WCAP-16500-NP submittal as this approach has not been reviewed or approved by the NRC staff.

Condition 3 Resolution. This evaluation is not addressing the NRC Information Notice 2012-09 [Reference 14] condition. The current methods will continue to be used. These methods have been found to be acceptable to apply to the LUAs [Reference 13]. The NRC issued Information Notice 2012-09 to inform addressees of operating experience involving evaluations of fuel assembly structural response to external loads and associated issues the NRC staff identified during recent reviews of fuel designs for design certification applications. The NRC expected that recipients would review the information for applicability to their facilities and consider actions, as appropriate, to avoid similar problems. Suggestions contained in the information notice are not NRC requirements; therefore, no specific action or written response was required.

Therefore, the proposed change does not result in a departure from a method of evaluation described in the UFSAR used in establishing the design bases or in the safety analyses

If any of the above questions is checked "Yes," obtain NRC approval prior to implementing the change by initiating a change to the Operating License in accordance with NMM Procedure EN-LI-103.

I. OVERVIEW / SIGNATURES[1]

Facility: Waterford 3 **Evaluation # / Rev. #:** 17-08 / Rev 0

Proposed Change / Document: CR-WF3-2017-5763 Compensatory Measure: Addition to OP-500-003, OP-500-013, and OP-500-014 for Manual Action to Restart Essential Chiller for Design Basis Events without LOOP

Description of Change:

Operator action is required and being credited to restart Essential Chiller B (or AB if aligned) from the control room (CP-18) in the event it trips due to a perturbation on its electrical bus. The action must be taken within 2 hours in the case of a design basis accident to preserve all design and safety functions of the Essential Chillers and supported SSCs. Emergency Operating Procedures already include an action to verify at least one Essential Chiller is operating. In events that do not cause entry into Emergency Operating Procedures, this action would be taken by following the appropriate annunciator response procedure, OP-500-013 or OP-500-014 as applicable. To implement this action, a "Possible Cause" of Electrical Transient and "Recommended Action" to take CP-18 remote control switch to STOP and then START is being added to E-2 in OP-500-013, and E7 in OP-500-014. For defense-in-depth, OP-500-003 will also be updated even though the associated indicators are not safety-related, where specific guidance for electrical bus perturbations will be added to C-2, C-3, C-4, and C-5. Essential Chiller A is unaffected by these types of electrical bus perturbations because its controls receive power from an uninterruptible power source (SUPS).

Summary of Evaluation:

The safety function of the Essential Chillers is to provide chilled water for those air handling systems which cool spaces containing equipment required for safety related operations, including the control room. This 50.59 Evaluation addresses the impact of the operator action required to manually restart Essential Chiller B (or AB if aligned) in events where a Loss of Offsite Power (LOOP) does not occur because the chiller is susceptible to trips driven by a disturbance on its electrical bus. This condition was identified in CR-WF3-2017-5763, which documented an unplanned Technical Specification Limiting Condition of Operation (LCO) entry for the loss of Essential Chiller B. The potential for non-safety buses to cause the safety-related Essential Chiller B (or AB if aligned) to trip has the potential to challenge the safety function of the Essential Chillers as well as supported systems and spaces which require cooling. Essential Chiller A is unaffected by bus perturbations because its controls receive power from an uninterruptible power source (SUPS). In the event of a LOOP, the Essential Chiller trips are bypassed/reset and it will load onto the Emergency Diesel Generator on its associated time-block and function normally.

Normal Operation:

There are three, 100% capacity Essential Chillers (A, B, and AB). During normal operation, two Essential Chillers are operating. The AB Chiller is a swing chiller which can be aligned to replace Essential Chiller A or B. Two chiller loops are required to be operable per Tech Spec 3.7.12. The Essential Chillers are credited to function during all Design Basis Events (DBE). Those DBEs that include an SIAS or LOOP will cause an automatic start signal to be sent to the Essential Chillers. Following a loss of offsite power, the chiller compressor motor would lose power, and would subsequently restart automatically at its associated Emergency Diesel Generator sequencer load block (168 seconds). The chillers would also automatically start following an SIAS; however, re-starting after a trip due to non-safety bus perturbations would require manual control room operator

[1] The printed name, company, department, and date must be included on the form. Signatures may be obtained via electronic processes (e.g., PCRS, ER processes), manual methods (e.g., ink signature), e-mail, or telecommunication. If using an e-mail or telecommunication, attach it to this form.

action. An Essential Chiller tripping due to bus perturbations affecting its control circuit is not considered to be a design basis active single failure for the purpose of this evaluation.

Manual Operation:

Due to the identified condition previously discussed (CR-WF3-2017-5763), manual action is required to restart Essential Chiller B (or AB if aligned) within 2 hours if an electrical disturbance occurs on the non-safety buses concurrent with a non-LOOP DBE. With the AB chiller aligned to train A, this introduces a common mode trip for both trains of Essential Chilled Water. However, the single failure criterion bounds this condition with the credited manual action. Since either the AB or B chiller could be the single failure in such a case, the remaining functional chiller would be restarted in accordance with the applicable annunciator response procedures. Note that the procedure enhancement implementing this action requires that it be completed in 2 hours without specifying that it is only required for DBEs. This is only for ease in following the procedure, and it does not invalidate the 72 hr LCO associated with Technical Specification 3.7.12. Using the ANSI/ANS 58.8-1994 method, the expected action time was calculated to be 68 minutes. The large margin between the expected and required operator action time provides sufficient time to recover from credible errors in performance of manual actions, and provides assurance that a dedicated operator is not required to perform this action. In addition, the margin is sufficient to account for additional challenges to the operators during a non-LOOP event that may delay action beyond the calculated expected action time. This action would be driven by annunciator response procedure OP-500-013 or OP-500-014 as applicable to receipt of the safety-related Control Room AH-12A (or AH-12B, respectively) Disch Air Temp Hi annunciator, or sooner by entry into OP-500-003 following receipt of the non-safety CHILLER UNAVAILABLE/TROUBLE, C0302, or CHLR B CMPRSR TRIP TEMPERATURE HI, C0303, alarms in the control room. Additions to annunciator response procedures OP-500-003, OP-500-013, and OP-500-014 will be made to include the Possible Cause of Bus Disturbance and Recommended Action of taking CP-18 control switch to STOP and then START.

References:

1. CR-WF3-2017-5763 Condition Report
2. OP-002-004, Rev. 314, Chilled Water System
3. OP-500-003, Rev, 27, Control Room Cabinet C (Annunciator Response Procedure)
4. OP-500-013, Rev. 22, Control Room Cabinet SA
5. OP-500-014, Rev. 21, Control Room Cabinet SB
6. W3-DBD-37, Rev. 301, Essential Chilled Water System Design Basis Document
7. W3-DBD-38, Rev, 301, Safety Related HVAC - Control Room
8. ECS01-009, Rev 0, Post-Accident Safety Related Room Temperatures for Availability. Attached to W3C1-2002-0011.
9. G-M0001, Rev. 4, Radiation and Temperature Charts Table II and III, Figures B1A, B1B, & B1C Figure B-1
10. G-M0003, Rev. 2, Environmental Zone Map T.P.H.C.S. Reactor Aux. Bldg. Plan EL.+46 Figures B-3
11. OP-902-002, Rev 20, Loss of Coolant Accident Recovery
12. OP-902-003, Rev 10, Loss of Offsite Power/Loss of Forced Circulation Recovery
13. OP-902-004, Rev 16, Excess Steam Demand Recovery Procedure
14. OP-902-005, Rev 21, Station Blackout Recovery
15. OP-902-006, Rev 18, Loss of Feedwater Recovery Procedure
16. OP-902-007, Rev 17, Steam Generator Tube Rupture Procedure
17. OP-902-009, Rev 317, Standard Appendices

Is the validity of this Evaluation dependent on any other change? ☐ Yes ☒ No

If "Yes," list the required changes/submittals. The changes covered by this 50.59 Evaluation cannot be implemented without approval of the other identified changes (e.g., license amendment request). Establish an appropriate notification mechanism to ensure this action is completed.

Based on the results of this 50.59 Evaluation, does the proposed change require prior NRC approval? ☐ Yes ☒ No

Preparer: Alex Tojeiro (for qual) & Paul Ola / 8/17/17 / 8-17-17 / EOI / DE-MECH & Systems NSSS /
Name (print) / Signature / Company / Department / Date

Reviewer: James Hoss / / EOI / DE-MECH / 8/17/17
Name (print) / Signature / Company / Department / Date

Independent Review[2]: N/A, this 50.59 Evaluation does not involve a change in a method of evaluation
Name (print) / Signature / Company / Department / Date

OSRC: Ron Gilmore / See attached / 8-18-17
Chairman's Name (print) / Signature / Date [GGNS P-33633, P-34230, & P-34420; W3 P-151]
W3 17-21
OSRC Meeting #

[2] If required by Section 5.1[3].

II. 50.59 EVALUATION [10 CFR 50.59(c)(2)]

Does the proposed Change being evaluated represent a change to a method of evaluation ONLY? If "Yes," Questions 1 – 7 are not applicable; answer only Question 8. If "No," answer all questions below.

☐ Yes
☒ No

Does the proposed Change:

1. Result in more than a minimal increase in the frequency of occurrence of an accident previously evaluated in the UFSAR?

☐ Yes
☒ No

BASIS:

This change credits an operator action that would be added to OP-500-013 and OP-500-0014 for a Control Room AH-12A Disch Air Temp Hi or Control Room AH-12B Disch Air Temp Hi safety-related annunciator (respectively) to restart Essential Chiller B or AB if aligned at CP-18 by setting the remote control switch to STOP and then START following a bus perturbation during a design basis event that does not involve a LOOP. For defense-in-depth, the same operator action to restart the chiller will also be added to OP-500-003 for the non-safety related CHILLER UNAVAILABLE/TROUBLE or MOTOR/COMP'R HIGH TEMP annunciators for the same event. UFSAR Chapters 6 and 15 were reviewed to identify which accidents previously evaluated could be initiated or caused by the proposed change. UFSAR section 6.4.2.2 discusses how the Essential Chillers are credited for controlling the thermal environment of the Control Room via the Control Room Air-Conditioning System. The Essential Chiller control logic does not include or interface with the Control Room Air Conditioning System logic. The Essential Chillers are not discussed in the various Chapter 15 events, but are implicitly credited to support the safety function of equipment that is explicitly credited in accident analyses. The proposed change does not affect any accident initiator. In accidents/events where a LOOP is generated, the Essential Chillers will automatically load onto their respective Emergency Diesel Generator and restart. The credited manual action does not create any new system interactions that could cause an accident.

Since the operation of the Essential Chillers does not affect any accident initiators and does not have the potential to cause an accident not previously evaluated in the UFSAR, the proposed change does not result in more than a minimal increase in the frequency of occurrence of an accident previously evaluated in the UFSAR.

2. Result in more than a minimal increase in the likelihood of occurrence of a malfunction of a structure, system, or component important to safety previously evaluated in the UFSAR?

☐ Yes
☒ No

BASIS:

This change credits an operator action that would be added to OP-500-013 and OP-500-0014 for a Control Room AH-12A Disch Air Temp Hi or Control Room AH-12B Disch Air Temp Hi safety-related annunciator (respectively) to restart Essential Chiller B or AB if aligned at CP-18 by setting the remote control switch to STOP and then START following a bus perturbation during a design basis event that does not involve a LOOP. For defense-in-depth, the same operator action to restart the chiller will also be added to OP-500-003 for the non-safety related CHILLER UNAVAILABLE/TROUBLE or MOTOR/COMP'R HIGH TEMP annunciators for the same event.

In the event described in CR-WF3-2017-5763, operators followed the applicable procedures following the receipt of the annunciator/alarm and operated the control switch on CP-18 to restart the tripped chiller about 5 minutes after receiving indication. After the manual start, the chiller returned to its normal operating band with respect to compressor amperage and outlet chilled water temperature about 10 minutes after the restart.

Using the ANSI/ANS 58.8-1994 method, the expected action time was calculated to be 68 minutes in the associated Operability Evaluation, with an allowed action time of 2 hours per the Operability Evaluation for CR-WF3-2017-5763. The time for the operators to receive indication of a failed chiller

was conservatively calculated to be approximately 30 minutes based on the time it takes for the Chilled Water going through the Control Room AH-12A(B) increasing to the AH-12A(B) discharge air temperature alarm value. The expected action time is based on assuming the most conservative plant condition (assumed Plant Condition 4 or 5, 20 minutes to diagnose the condition), using two discrete operator actions (5 minute wait, then 1 minute for operating the Chiller control switch to STOP, then 1 minute to START), and a process delay of 11 minutes to account for the oil pump starting (1 minute) and subsequently the compressor starting and reaching a steady state condition (10 minutes). The process delay was based on data from the transient of the chiller compressor reducing the CHW temperature back to its normal operating band. The temperature of the chilled water began to drop within seconds, indicating the compressor was performing its function well before the equilibrium point was reached 10 minutes after the compressor started, which is conservative. Based on the large remaining margin of 52 minutes between the calculated action time and safety limit, in addition to the actual operator response time of 5 minutes after receiving indication in this event, no additional validation of the response time is required.

The additional start cycle of the chiller has a negligible impact in the duty life of the Essential Chiller and does not result in more than a minimal increase in the likelihood of a malfunction of the Essential Chillers as previously evaluated in the UFSAR.

The manual action to restart the Essential Chiller does not affect other plant systems.

A review of the Time Critical Action Program, UNT-007-067, was conducted. There are only 6 time-critical actions required for times greater than 30 minutes and equal to 2 hours. Of these, four of the actions are performed outside the control room and do not affect control room response times. The other two actions are to 1) reduce power in the case of a CEA drop; and 2) Establish simultaneous hot leg and cold leg injection in the case of a large break LOCA. It is reasonable to assume that the task to manually reset and restart the essential chiller B (AB) from CP-18 will not affect the control room operators' ability to perform the remaining two time-critical actions required prior to two hours.

The credited operator action being taken within 2 hours is to protect the capability of systems supported by the Essential Chillers to perform their safety functions in the event of a DBE. ECS01-009 determined that with the loss of a chiller, the maximum temperature after a LOCA (worst-case heat load) of the bounding room, the CCW pump room, would not be expected to exceed 143°F in 2 hours. Several conservative assumptions are made in this calculation. The maximum room temperatures are determined using constant peak LOCA heat load throughout the event, which is exceedingly conservative because peak LOCA heat load occurs within the first hour of the event and drops rapidly thereafter. The temperature of surrounding rooms is assumed to be at the RAB design basis temperature of 104°F, which limits initial heat transfer from the analyzed rooms. Although the 143°F temperature is higher than the EQ temperature of UFSAR Table 3.11-1, no equipment temperature limit would be challenged to the point it would not be able to function for the duration of its mission time since the elevated temperatures would not be seen for more than two hours. The Essential Chillers also support Control Room Habitability. The Control Room is evaluated to not exceed 120°F in the 4 hours following a Station Blackout per UFSAR Chapter 8.1A, however that requires taking additional actions. The heat loads in an SBO are reduced due to the loss of power, relative to this case where no LOOP occurs. In an event where no SIAS/LOOP is received but the compressor trips, the chilled water pump and the Control Room Air Handling Unit [AH-12A(B)] will continue to operate. The loss of the chiller does not represent a complete loss of cooling since the chilled water will continue to circulate through the system. The continued supply of chilled water in addition to AH-12 providing forced circulation and rejecting heat to the chilled water will reduce the rate of room heat-up significantly, relative to a complete loss of cooling. In the event of radiological release where the control room is isolated from outside air, the heat load to the chilled water would be reduced since the outside air intake is closed and hot outside air is not being drawn in and cooled. Due to the limited ability to remove heat from the control room without the Essential Chiller, the control room can be reasonably concluded to remain habitable for 2 hours without restarting the tripped Essential Chiller. Since the supported SSCs remain capable of performing their safety functions within this response time per ECS01-009 (attached to W3C1-2002-0011), there is no impact on accident consequences.

NEI 96-07 is endorsed by NRC Regulatory Guide 1.187. Example 3 of section 4.3.2 applies to manual operator actions used to support a design function of an SSC. NEI 96-07 states that this type of proposed change is acceptable, provided:

1) The action (including required completion time) is reflected in plant procedures and operator training programs
2) The licensee has demonstrated that the action can be completed in the time required considering the aggregate effects, such as workload or environmental conditions, expected to exist when the action is required
3) The evaluation of the change considers the ability to recover from credible errors in performance of manual actions and the expected time required to make such a recovery
4) The evaluation considers the effect of the change on plant systems

Emergency Operating Procedures already include an action to verify the Essential Chiller is operating. In events that do not cause entry into Emergency Operating Procedures, this action would be taken by following the appropriate annunciator response procedure, OP-500-013 or OP-500-014 as applicable. To implement this action, a "Possible Cause" of Electrical Transient and "Recommended Action" to take CP-18 remote control switch to STOP and then START is being added to E-2 in OP-500-013, and E7 in OP-500-014. For defense-in-depth, OP-500-003 will also be updated even though the associated indicators are not safety-related, where specific guidance for electrical bus perturbations will be added to C-2, C-3, C-4, and C-5. The large margin between the expected (68 minutes) and required (2 hours) operator action time, as well as the actual time taken to complete the action after the perturbation / chiller trip documented in CR-WF3-2017-5761, provide sufficient time to recover from credible errors in performance of manual actions, and it provides assurance that a dedicated operator is not required to perform this action. In addition, the margin is sufficient to account for additional challenges to the operators during a non-LOOP event that may delay action beyond the calculated expected action time. Errors made during the manual operation of the STOP/START control switch are unlikely, but the short time required to perform the control switch actuation is small compared the total time credited for the action. Even if an error is made in the troubleshooting phase of the action, which is precluded by following operations procedure OP-500-003, OP-500-013, or OP-500-014 as applicable to the received annunciator(s), the worst case delay would be due to the time delay drop out for the compressor preventing manual restart for an additional 20 minutes; this would not cause the action time to exceed its allowable limit since more than 20 minutes of margin is available. The credited manual action is taken within an allowable time based on protecting capabilities of the SSCs supported by the essential chiller. Therefore, this action does not result in more than a minimal increase in the likelihood of a malfunction of an SSC previously evaluated in the UFSAR.

3. Result in more than a minimal increase in the consequences of an accident previously evaluated in the UFSAR? ☐ Yes ☒ No

BASIS:

This change credits an operator action that would be added to OP-500-013 and OP-500-0014 for a Control Room AH-12A Disch Air Temp Hi or Control Room AH-12B Disch Air Temp Hi safety-related annunciator (respectively) to restart Essential Chiller B or AB if aligned at CP-18 by setting the remote control switch to STOP and then START following a bus perturbation during a design basis event that does not involve a LOOP. For defense-in-depth, the same operator action to restart the chiller will also be added to OP-500-003 for the non-safety related CHILLER UNAVAILABLE/TROUBLE or MOTOR/COMP'R HIGH TEMP annunciators for the same event. UFSAR Chapters 6 and 15 were reviewed to identify which accidents previously evaluated could have increased consequences.

The safety function of the Essential Chillers is to provide chilled water for those air handling systems which cool spaces containing equipment required for safety related operations, including the control room.

The operation of the Essential Chillers has no impact on dose analyses for the control room as evaluated in UFSAR Chapter 15.7 events, since the outside air dampers' control logic is not tied to the start/stop of the Essential Chillers. Since only operator action within the control room is required, there is no expected dose consequence increase to operators in support of this manual operator action. The credited operator action being taken within 2 hours is to protect the capability of systems supported by the Essential Chillers to perform their safety functions in the event of a DBE. Since the supported SSCs remain capable of performing their safety functions within this response time, there is no impact on accident consequences.

The emergency operating procedures pertaining to DBEs contain steps to verify that the essential chillers are operating and to attempt to start them if not. Since this step is already included in Emergency Operating Procedures, performing the same STOP/START function from the control room added to OP-500-003, OP-500-013, and OP-500-014 will not alter any accident consequences.

The proposed change ensures the Essential Chiller will be restarted in a timely manner and capable of performing its safety functions. Therefore, the proposed change does not result in more than a minimal increase in the consequences of an accident previously evaluated in the UFSAR.

4. Result in more than a minimal increase in the consequences of a malfunction of a structure, system, or component important to safety previously evaluated in the UFSAR? ☐ Yes ☒ No

BASIS:

This change credits an operator action that would be added to OP-500-013 and OP-500-0014 for a Control Room AH-12A Disch Air Temp Hi or Control Room AH-12B Disch Air Temp Hi safety-related annunciator (respectively) to restart Essential Chiller B or AB if aligned at CP-18 by setting the remote control switch to STOP and then START following a bus perturbation during a design basis event that does not involve a LOOP. For defense-in-depth, the same operator action to restart the chiller will also be added to OP-500-003 for the non-safety related CHILLER UNAVAILABLE/TROUBLE or MOTOR/COMP'R HIGH TEMP annunciators for the same event. UFSAR Chapters 6, 9, and 15 were reviewed to identify which consequences of identified malfunctions of SSCs evaluated in the UFSAR could be increased.

The safety function of the Essential Chillers is to provide chilled water for those air handling systems which cool spaces containing equipment required for safety related operations, including the control room. The credited operator action being taken within 2 hours is to protect the capability of systems supported by the Essential Chillers to perform their safety functions in the event of a DBE. The supported SSCs remain capable of performing their safety functions within this response time per ECS01-009.

The emergency operating procedures pertaining to DBEs contain steps to verify that the essential chillers are operating and to attempt to start them if not. Since this direction is already included in Emergency Operating Procedures, performing the same STOP/START function from the control room in accordance with OP-500-013, OP-500-014, or OP-500-003 (as applicable) will not alter any accident consequences.

The proposed change ensures the Essential Chillers and systems supported by the Essential Chillers can perform their safety functions as described in the UFSAR. This operator action does not adversely affect the capability of the Essential Chillers or SSCs supported by the Essential Chillers to perform their credited safety functions. Therefore, the proposed change does not result in more than a minimal increase in the consequences of a malfunction of an SSC previously evaluated in the UFSAR.

5. Create a possibility for an accident of a different type than any previously evaluated in the UFSAR? ☐ Yes ☒ No

BASIS:

This change credits an operator action that would be added to OP-500-013 and OP-500-0014 for a Control Room AH-12A Disch Air Temp Hi or Control Room AH-12B Disch Air Temp Hi safety-related annunciator (respectively) to restart Essential Chiller B or AB if aligned at CP-18 by setting the remote control switch to STOP and then START following a bus perturbation during a design basis event that does not involve a LOOP. For defense-in-depth, the same operator action to restart the chiller will also be added to OP-500-003 for the non-safety related CHILLER UNAVAILABLE/TROUBLE or MOTOR/COMP'R HIGH TEMP annunciators for the same event. UFSAR Chapters 6 and 15 were reviewed to identify postulated accidents and determine if the proposed change could create a different accident.

The emergency operating procedures pertaining to DBEs contain steps to verify that the essential chillers are operating and to attempt to start them if not. In events that do not cause entry into Emergency Operating Procedures, this action would be taken by following the appropriate annunciator response procedure, OP-500-013 or OP-500-014 as applicable. To implement this action, a "Possible Cause" of Electrical Transient and "Recommended Action" to take CP-18 remote control switch to STOP and then START is being added to E-2 in OP-500-013, and E7 in OP-500-014. For defense-in-depth, OP-500-003 will also be updated even though the associated indicators are not safety-related, where specific guidance for electrical bus perturbations will be added to C-2, C-3, C-4, and C-5. This established clear procedural guidance to perform the action credited in this compensatory measure to restore the affected Essential Chiller. Since this direction is already included in Emergeency Operating Procedures, performing the same STOP/START function from the control room as added to OP-500-003, OP-500-013, and OP-500-014 will not alter any evaluated accident consequences. The manually started Essential Chiller will meet all credited safety functions. The function and use of the manually started Essential Chiller remains the same. Therefore, an accident of a different type than previously evaluated in the UFSAR will not be created.

6. Create a possibility for a malfunction of a structure, system, or component important to safety with a different result than any previously evaluated in the UFSAR? ☐ Yes ☒ No

BASIS:

This change credits an operator action that would be added to OP-500-013 and OP-500-0014 for a Control Room AH-12A Disch Air Temp Hi or Control Room AH-12B Disch Air Temp Hi safety-related annunciator (respectively) to restart Essential Chiller B or AB if aligned at CP-18 by setting the remote control switch to STOP and then START following a bus perturbation during a design basis event that does not involve a LOOP. For defense-in-depth, the same operator action to restart the chiller will also be added to OP-500-003 for the non-safety related CHILLER UNAVAILABLE/TROUBLE or MOTOR/COMP'R HIGH TEMP annunciators for the same event. UFSAR Chapters 6, 9 and 15 were reviewed to identify postulated malfunctions and determine if the proposed change could cause a previously evaluated malfunction to have a different result than evaluated in the UFSAR.

The failure modes for the Essential Chillers as described in UFSAR Table 9.2-17 are not affected by the proposed action. If Essential Chillers A & B are aligned to their respective buses, a failure of train B would be bounded by the discussion in Table 9.2-17. Failure mode (1) of the water chiller, loss of power, is already evaluated to cause a loss of cooling capacity. This mode is the only one that could occur due to control power perturbations, and manual operation of the STOP/START switch in the control room would not change the effect on the chilled water system. The identified condition associated with the Operability Evaluation may identify a common mode failure (chiller trip) in the event Essential Chiller AB is aligned to train A, however, this is bounded by a single failure of train A with the proposed manual action to restart Essential Chiller B. The proposed action does not introduce any new common mode failures.

The credited operator action being taken within 2 hours is to protect the capability of systems supported by the Essential Chillers to perform their safety functions in the event of a DBE. The

supported SSCs remain capable of performing their safety functions within this response time per ECS01-009, so no malfunction of a supported SSC will be introduced by the proposed change.

The emergency operating procedures pertaining to DBEs contain steps to verify that the essential chillers are operating and to attempt to start them if not. In events that do not cause entry into Emergency Operating Procedures, this action would be taken by following the appropriate annunciator response procedure, OP-500-013 or OP-500-014 as applicable. To implement this action, a "Possible Cause" of Electrical Transient and "Recommended Action" to take CP-18 remote control switch to STOP and then START is being added to E-2 in OP-500-013, and E7 in OP-500-014. For defense-in-depth, OP-500-003 will also be updated even though the associated indicators are not safety-related, where specific guidance for electrical bus perturbations will be added to C-2, C-3, C-4, and C-5. This established clear procedural guidance to perform the action credited in this compensatory measure to restore the affected Essential Chiller. Since this direction is already included in Emergency Operating Procedures, performing the same STOP/START function from the control room as added to OP-500-003, OP-500-013, and OP-500-014 will not introduce any new SSC malfunctions or results of malfunctions.

The manual operator action is evaluated against NRC Inspection Manual 0326, NRC Information Notice 97-78, NRC Regulatory Issue Summary 2005-20, and ANSI/ANS-58.8-1994. The ten primary attribute evaluations are specifically listed below.

(1) The specific operator actions required

This is discussed in detail in the response for question 2 in this 50.59 evaluation. In summary, annunciator response procedures OP-500-003, OP-500-013, and OP-500-014 as applicable will have instructions for the operator to restart the affected Essential Chiller B (or AB if aligned) by setting the control switch at CP-18 in the Control Room to STOP and then START within 2 hours of the Essential Chiller trip.

(2) The potentially harsh or inhospitable environmental conditions expected

This is discussed in detail in the responses for questions 2 and 3 in this 50.59 evaluation. Since the action is being taken from the control room, there is no increased dose to operators in performing this operator action. The action time is within the safety limits of the equipment supported by the Essential Chillers that perform a safety function. Therefore, since no safety limits are challenged and all equipment supported by the Essential Chillers will perform as required, there will be no excessively harsh or inhospitable environmental conditions that would be created or challenged by the proposed manual action.

(3) A general discussion of the ingress/egress paths taken by the operators to accomplish functions

This is discussed in detail in the response to question 2. The manual restart of the affected Essential Chiller is performed from the control room. Therefore the ingress/egress paths are those within the current design basis.

(4) The procedural guidance for required actions

This is discussed in detail in the responses for questions 2 and 7 in this 50.59 evaluation. Emergency Operating Procedures OP-902-002, OP-902-003, OP-902-004, OP-902-005, OP-902-006, OP-902-007, and OP-902-008 all contain steps to verify at least one essential chiller is operating, with a contingency to start an essential chiller if no essential chillers are operating. Some off-normal procedures do not include guidance to verify Essential Chiller operation, therefore the manual operator action being credited in this compensatory measure applies to Annunciator Response Procedures OP-500-003, OP-500-013, and OP-500-014, where specific, clear guidance is added to drive operators to set the manual control switch in the Control Room at CP-18 to STOP and then START in the event of an electrical transient or bus disturbance. As the receipt of annunciators will drive operators to enter the associated annunciator response procedure, crediting the actions as added to the annunciator response procedures bounds all Emergency Operating Procedure and Off-Normal Operating Procedure events.

(5) The specific operator training necessary to carry out actions, including any operator

qualifications required to carry out actions

The operator action will be performed from Control Room CP-18 in accordance with the annunciator response procedures listed in Item (4). The operator will be required to be licensed and current on their license requirements. The operating procedures are those trained on during requalification cycles so no additional training is required. A licensed operator is already the minimum requirement to perform control board actions. Per IM 0326, no additional training or qualification is required to perform this action from the Control Room. Operations/Training may provide specific training to operators if desired.

(6) Any additional support personnel and/or equipment required by the operator to carry out actions

This is discussed in detail in the response to question 2 in this 50.59 evaluation. The manual action to restart the affected Essential Chiller is performed from the Control Room using the control switch on CP-18, therefore no additional equipment is required to perform the action. Due to the observed operator response time of 5 minutes after receiving indication and the calculated operator response time of 68 minutes in accordance with ANSI/ANS 58.8-1994 being significantly less than the time limit of 120 minutes (2 hours), no additional personnel are required to perform this action. The Time Critical Action Program was also reviewed for operator actions required to be performed in the first two hours of applicable events, and this added operator action does not introduce any challenges to the completion of previously credited actions.

(7) A description of information required by the control room staff to determine whether such operator action is required, including qualified instrumentation used to diagnose the situation and to verify that the required action has successfully been taken

This is discussed in detail in the response to question 2 in this 50.59 evaluation. In the event entry into an Emergency Operating Procedure occurs, the operator will use indications on CP-18 and identify the Essential Chiller as tripped and will be driven to take action to ensure at least one chiller is operational. In other events where no EOPs are entered, safety related annunciators for Control Room AH-12A (or B) Disch Air Temp Hi will actuate in less than 30 minutes and the associated annunciator response procedures OP-500-013 or OP-500-014 will be entered as applicable and drive restarting of the affected Essential Chiller. For defense-in-depth, the applicable guidance to restart the affected Essential Chiller is also added for the non-safety Essential Chiller UNAVAILABLE/TROUBLE and CHLR CMPRSR TRIP TEMPERATURE HI annunciators in OP-500-003.

(8) The ability to recover from credible errors in performance of manual actions, and the expected time required to make such a recovery

This is discussed in detail in the response to question 2 in this 50.59 evaluation. In accordance with ANSI/ANS 58.8-1994, the operator response time was calculated to be 68 minutes with a required action time of 120 minutes, which results in a margin of 52 minutes. The worst case credible error in performing the action would be setting the control switch to STOP on the Essential Chiller that was just started because this will result in the Time Delay Drop Out relay locking out restart of the chiller for 20 minutes. Since the margin of 52 minutes is greater than the worst case delay, operators will be capable of recovering from credible errors in performance of this manual action. The operator action being credited in this evaluation does not affect the assumed single failures in design basis events evaluated in the UFSAR.

(9) Consideration of the risk significance of the proposed operator actions.

Considering the availability of cues to the operators, the non-adverse environment, locality of the action, available specific procedural guidance, and qualified personnel, the impact of this change on plant risk is negligible. The Essential Chillers and their credited function of supporting safety-related equipment in the plant remains met. There is no adverse impact on plant risk.

(10) Time Response as outlined in ANSI/ANS 58.8-1994, "Time Response Design Criteria for Safety-

Related Operator Action"

This is discussed in detail in the response to question 2 in this 50.59 evaluation. In accordance with ANSI/ANS 58.8-1994, the required operator action time was calculated to be 68 minutes, with a margin of 52 minutes to the allowed action time of 120 minutes (2 hours). The proposed operator action meets the requirements of ANSI/ANS 58.8-1994.

The proposed operator action to restart Essential Chiller B (or AB if aligned) does not create a possibility for a malfunction of an SSC with a different result than any previously evaluated in the UFSAR.

7. Result in a design basis limit for a fission product barrier as described in the UFSAR being exceeded or altered? ☐ Yes ☒ No

BASIS:

This change credits an operator action that would be added to OP-500-013 and OP-500-0014 for a Control Room AH-12A Disch Air Temp Hi or Control Room AH-12B Disch Air Temp Hi safety-related annunciator (respectively) to restart Essential Chiller B or AB if aligned at CP-18 by setting the remote control switch to STOP and then START following a bus perturbation during a design basis event that does not involve a LOOP. For defense-in-depth, the same operator action to restart the chiller will also be added to OP-500-003 for the non-safety related CHILLER UNAVAILABLE/TROUBLE or MOTOR/COMP'R HIGH TEMP annunciators for the same event.

The safety function of the Essential Chillers is to provide chilled water for those air handling systems which cool spaces containing equipment required for safety related operations, including the control room. This safety function supports other safety related equipment that protects fission product barriers (fuel cladding, reactor coolant system pressure boundary, and containment), and must be considered since it could impact design basis limits if supported equipment loses the ability to function.

The credited operator action being taken within 2 hours is to protect the capability of systems supported by the Essential Chillers to perform their safety functions in the event of a DBE. The supported SSCs remain capable of performing their safety functions within this response time per ECS01-009 (see response to question 2 for more detail).

The emergency operating procedures pertaining to DBEs (OP-902-002, OP-902-003, OP-902-004, OP-902-005, OP-902-006, OP-902-007, OP-902-008) contain steps to verify that at least one essential chiller is operating and to start one if not. Since this direction is already included in Emergency Operating Procedures, performing the same STOP/START function from the control room as added to OP-500-003, OP-500-013, and OP-500-014 will not change the effect on fission product barriers.

This evaluation shows that the expected operator action time of 68 minutes, is significantly shorter than the allowed action time of 2 hours. The large margin and consideration of the actual response time of 5 minutes after receiving indication seen in this event (CR-WF3-2017-5763) supports the conclusion that this action will be completed prior to any safety limits of supported equipment being challenged. Therefore, the proposed action does not result in a design basis limit for a fission product barrier as described in the UFSAR being exceeded or altered, and radiological consequences are consequently not impacted.

8. Result in a departure from a method of evaluation described in the UFSAR used in establishing the design bases or in the safety analyses? ☐ Yes ☒ No

BASIS:

Methods of evaluation are defined as the calculation framework used for evaluating behavior or response of the facility or an SSC [Reference NEI 96-07 Section 3.10]. This change is not impacting the methodology or topical reports used in the UFSAR analyses. The existing UFSAR evaluations considering the Essential Chillers are unaffected by the proposed change. Therefore, the proposed change does not result in a departure from a method of evaluation described in the UFSAR used in establishing the design bases or in the safety analyses

If any of the above questions is checked "Yes," obtain NRC approval prior to implementing the change by initiating a change to the Operating License in accordance with NMM Procedure EN-LI-103.

Commitment Change Summary Report

CCEF Number	Commitment Number	Commitment Description	Reason for Change/Deletion
2016-0005	P-21792	The commitment to perform inspection of CS-i 25B on an 18 month frequency was communicated to the NRC (submitted in writing on the docket) as corrective action in response to a reportable event and violation of an NRC requirement. At that time, this corrective action was identified as necessary to prevent/detect potential failures of CS-i 25B, which could result in the recurrence of the adverse condition of inoperability of a CS train due to inability of the valve to stroke when commanded.	The commitment was subsequently changed to utilize a DP test and diagnostics in order to detect potential adverse conditions. This commitment was not necessary to restore compliance with the violated NRC requirement (obligation).
2016-0006	P-186	Administrative Control and QA – Maintenance Procedures - Scope	The procedure commitment (186), originating in 1976, is well over 2 years old. Therefore, it is well-established in Waterford 3's process, and in no danger of being eliminated. The ANSI requirements are coveted in EN-AD-IOI Procedure Process, EN-MA-131 Lockout Tagout of N Non Plant Related Equipment, and EN-MA-118 Foreign Material Exclusion. Thus, the commitment is obsolete and should be deleted.
2016-0007	P-2777	Turbine Overspeed Protection – verify operability by cycling valves	This commitment is not a regulatory commitment. It does not meet the requirement to be a regulatory commitment in NEI 99-04 and was not designated as one in any docketed correspondence with the NRC. This is an obligation that is not required to be in the CMS.
2016-0008	P-6164	Functional Test Requirement for Turbine Steam Inlet Valves	This commitment is not a regulatory commitment. It does not meet the requirement to be a regulatory commitment in NEI 99-04 and was not designated as one in any docketed correspondence with the NRC. This is an obligation that is not required to be in the CMS.
2016-0009	P-13532	Functional Test Requirement for Turbine Steam Inlet Valves	This commitment is not a regulatory commitment. It does not meet the requirement to be a regulatory commitment in NEI 99-04 and was not designated as one in any docketed correspondence with the NRC. This is an obligation that is not required to be in the CMS.
2016-0010	P-2771	Turbine Over speed Protection - LCO	This commitment is not a regulatory commitment. It does not meet the requirement to be a regulatory commitment in NEI 99-04 and was not designated as one in any docketed correspondence with the NRC. This is an obligation that is not required to be in the CMS

Commitment Change Summary Report

CCEF Number	Commitment Number	Commitment Description	Reason for Change/Deletion
2016-0011	P-16674	RCP (Reactor Coolant Pump) Operation for loss main feed water and only one motor drive Emergency Feed water pump	Letters W3083-0178 and W3P83-2675 were internal correspondence communicating the analysis input and procedural requirements. These correspondences were not to the NRC and did not make a regulatory commitment.
2016-0012	P-6206	Procedural Requirement for Reactor Coolant Pump Operation	This commitment is not a regulatory commitment. It does not meet the requirement to be a regulatory commitment per NEI 99-04 and was not designated as one in any docketed correspondence with the NRC. This is an analysis input not required to be in the CMS.
2016-0013	P-4383	Incorporate the Operational Requirement to secure all RCPs 30 minutes after a loss of all Main Feed water into the Emergency Operating Procedures.	This commitment is not a regulatory commitment. It does not meet the requirement to be a regulatory commitment per NEI 99-04 and was not designated as one in any docketed correspondence with the NRC. This is an analysis input not required to be in CMS
2016-0014	A-4383	Incorporate the Operational Requirement to secure all RCPs 30 minutes after a loss of all Main Feed water into the Emergency Operating Procedures	This commitment is not a regulatory commitment. It does not meet the requirement to be a regulatory commitment per NEI 99-04 and was not designated as one in any docketed correspondence with the NRC. This is an analysis input not required to be in CMS.
2016-0015	P-13969	Small size snubber test failures due to improper installation	MM-006-116 and MM-006-150 implement removing snubbers and restraints – this commitment status changed to Historical.
2016-0016	P-14235	Violation – Failure to follow Maintenance Procedures	Commitment implemented – W3 has training programs and procedure use programs that are designed to enforce procedure usage. MM-012-001 ensures that snubbers are not damaged during installation.
2016-0017	P-21208	Violation: Failure of Workers to sign in under the appropriate Radiation work permit	In the process of industry initiative Delivering the Nuclear Promise', Entergy fleet Plant Access Training for Site Specifics' (PATSS) will be deleted. Training for Radiation Workers are now taught generically in NANTeL Generic Plant Access Training, With more

Commitment Change Summary Report

CCEF Number	Commitment Number	Commitment Description	Reason for Change/Deletion
			specific training in NANTeL Generic Radiation Worker Training on hazards of high radiation areas, boundaries and postings.
2016-0018	P-3113	IEC- 80-14 Internal Contamination of Personnel via Radioactive contamination of Demineralized water system.	In the process of industry initiative Delivering the Nuclear Promise', Entergy fleet Plant Access Training for Site Specifics' (PATSS) will be deleted. The hazards of contamination are now taught generically in NANTeL Generic Plant Access Training and in detail in NANTeL Generic Radiation Worker Training.
2016-0019	P-2481	IEC-76-03 Actions to preclude overexposure of personnel to High Radiation	In the process of industry initiative Delivering the Nuclear Promise', Entergy fleet 'Plant Access Training for Site Specifics' (PATSS) will be deleted. Training for Radiation Workers are now taught generically in NANTeL Generic Plant Access Training, With more specific training in NANTeL Generic Radiation Worker Training on hazards of high radiation areas, boundaries and postings.
2016-0020	P-3188	Training Program for Non-essential personnel who work onsite outside of the Protected Area.	In the process of industry initiative Delivering the Nuclear Promise', Entergy fleet Plant Access Training for Site Specifics' (PATSS) will be deleted. Training for non-essential personnel are now taught generically in NANTeL Genetic Plant Access Training.
2016-0021	P-20809	Violation: Failure to post Radiologically Controlled Areas – Revise GET (General Employee Training)	In the process of industry initiative 'Delivering the Nuclear Promise', Entergy fleet 'Plant Access Training for Site Specifics' (PATSS) will be deleted. Training for Radiation Workers are now taught generically in NANTeL Generic Plant Access Training, With more specific training in NANTeL Generic Radiation Worker Training on hazards of radiation areas, boundaries and postings.
2016-0022	P-17226	Violation: Failure to follow plant procedures governing the operation of Danger Tagged equipment.	In the process of industry initiative 'Delivering the Nuclear Promise', Entergy fleet Plant Access Training for Site Specifics' (PATSS) will be deleted. Training for responsibilities in regards to Danger/safety tagging and ramifications of not following them is now taught in NANTeL Generic Plant Access Training.
2016-0023	P-22708	LER 90-001: Air lock door administrative controls	In the process of industry initiative 'Delivering the Nuclear Promise', Entergy fleet Plant Access Training for Site Specifics' (PATSS) will be deleted. Training is now standardized throughout the industry. Training for door operation is now taught in NANTeL Generic Plant Access Training,

Commitment Change Summary Report

CCEF Number	Commitment Number	Commitment Description	Reason for Change/Deletion
2016-0024	P-25910	Security Improvement Plan – develop training for Site Personnel on Response to Security Event and include in New Employee Training.	In the process of industry initiative Delivering the Nuclear Promise', Entergy fleet 'Plant Access Training for Site Specifics' (PATSS) will be deleted. Training for Site personnel on response to security events is now taught in Generic Awareness Training.
2016-0025	P-20285	Violation: Four examples of Failure to comply with Approved Procedures – update GET and compliance directive.	In the process of industry initiative 'Delivering the Nuclear Promise', Entergy fleet 'Plant Access Training for Site Specifics' (PATSS) will be deleted. Training for using and following procedures and the consequences of not following procedures is now taught in NANTeL Generic Plant Access Training.
2016-0026	P-23149	Violation: Failure to comply with Escort to visitor ratio – submit required response.	In the process of industry initiative 'Delivering the Nuclear Promise', Entergy fleet 'Plant Access Training for Site Specifics' (PATSS) will be deleted. General Employee Training is now standardized across the industry.
2016-0027	P-20274	Violation: Safeguards – Inadequate Protection of SG Information – expand General Employee Training (GET)	In the process of industry initiative "Delivering the Nuclear Promise", Entergy fleet 'Plant Access Training for site specifics' (PATSS) will be deleted. General Employee training and periodicity is now standardized across the industry.
2016-0028	P-27551	Closure options for generic safety issues : In the event that the PWROG testing program for increasing the allowable amount of fiber per fuel assembly is not successful in increasing this limit above the plant specific values for Waterford 3, any necessary replacement or remediation of insulation will be completed by the third refueling outage following January 1, 2013 (tentatively scheduled for spring 2017).	As stated in the response to question 2.1 of this CCEF, evaluations have been performed to document Waterford 3 compliance with the requirements of GSI- 191 and GL 2004-02. The design basis was updated accordingly (see Waterford 3 UFSAR 6.2.2.2.2.1). In order to support continued operation for the time period required to complete the necessary analyses, testing and plant modifications (if necessary), Waterford 3 evaluated the design and procedural capabilities that exist to prevent, detect and mitigate sump strainer and in-vessel blockage. A summary of these prevention, detection, and mitigative measures was provided in W3FI -201 3-0027 and in previous submittals in response to GL 2004-02, as referenced in W3FI -201 3-0027.
2016-0029	P-27552	Closure Option for Generic Safety Issue - 191, Within six months of establishing a final determination of the scope of insulation replacement, remediation, or model refinements, Waterford 3 will submit a final updated supplemental response to support closure of GL 2004-02 for Waterford 3. Based on the PWROG program schedule, Waterford 3 expects to submit the final updated response by December 15, 2016.	The NRC has issued RAIs for WCAP-17788, which the PWROG and Westinghouse are currently preparing the response. It is unknown at this time whether additional RAIs will be issued following the response to the first round of RAIs. Therefore, it is desirable to remove the date from NRC Commitment 27552; instead, the completion date will be contingent upon approval of the PWROG

Commitment Change Summary Report

CCEF Number	Commitment Number	Commitment Description	Reason for Change/Deletion
			topical report, currently WCAP-17788.
2016-0030	P-27553	Waterford 3 will evaluate the current licensing basis following NRC acceptance of the final updated supplemental response for Waterford 3.	As stated in the response to question 2.1 of this CCEF, evaluations have been performed to document Waterford 3 compliance with the requirements of GSI- 191 and GL 2004-02. The design basis was updated accordingly (see Waterford 3 UFSAR 6.2.2.2.2.1). In order to support continued operation for the time period required to complete the necessary analyses, testing and plant modifications (if necessary), Waterford 3 evaluated the design and procedural capabilities that exist to prevent, detect and mitigate sump strainer and in-vessel blockage. A summary of these prevention, detection, and mitigative measures was provided in W3FI -201 3-0027 and in previous submittals in response to GL 2004-02, as referenced in W3FI-2013-0027.
2016-0031	P-26144	Arrangements will be made such that the storage tank level is maintained above the "5 day" TS minimum level during the test. (Required only if the EDG is to be maintained operable during the 24 hour test	This change removes the actual gallon level associated with the 5-day EDG fuel oil operability limit from the commitment text. The 5-day limit value is controlled by TS and then by Ops procedures to account for instrument uncertainty. The 38,000 gal number in the commitment text is outdated. This level of detail is not necessary to be in the commitment text and will prevent having to change the commitment again in the future. The "5 Day" text is adequate to describe the fuel oil level operability limit for the EDGs.
2017-0001	P-5089, P-5170, P-5171, P-5183, P-7363, P-7364, P-7373, P-12996, P-12997, P-14150, P-16960, P-17415, P-21061, P-21980	Emergency Preparedness positions within the ERO	Emergency Plan Revision 47 updates changing approximately 15 passive commitments from SAT to Historic.
2017-0002	P-4134	Maintenance of reactor coolant system welder qualification records (UNT-007-056 R 301 "Implementation of central welding program") EN-DC-328 & CEP-WP-00310 CFR50.55(b)	Engineering – Design CR-WF3-2017-00462 (Status change to Historic)
2017-0003	P-4725	Welding and welding control procedures (UNT-007-056 R 301 "Implementation of central welding program") EN-DC-328 & CEP-WP-002 10 CFR50.55(b).	Engineering – Design CR-WF3-2017-00462 (Status change to Historic
2017-0004	P-13612	Violation: Failure to Control nonconforming components (UNT-007-	Engineering – Design

Commitment Change Summary Report

CCEF Number	Commitment Number	Commitment Description	Reason for Change/Deletion
		056 R 301 "Implementation of central welding program")	CR-WF3-2017-00462 (Status change to Historic
2017-0005	P-15598	Missed Penetration Test on two welds due to personnel error: Revised procedures MM-001-054 & MM-001-056 (UNT-007-056 R 301 "Implementation of central welding program") EN-DC-328 & CEP-WP-WIIR1 (CEP-WP-WIIR-1 assigns all standard in process inspections 10 CFR50.55(b)	Engineering – Design CR-WF3-2017-00462 (Status change to Historic)
2017-0006	P-15639	Structural Steel welding inspection – missed penetration test on two welds due to personnel error: revise procedures MM-001-054 and MM-001-056 (UNT-007-056 R 301 "Implementation of central welding program") EN-DC-328 & CEP-WP-WIIR-1 (CEP-WP-WIIR-1 assigns all standard in process inspections 10 CFR50.55(b)	Engineering – Design CR-WF3-2017-00462(Status change to Historic)
2017-0007	P-17742	Falsification of Welder Qualifications for contractor employees (UNT-007-056 R 301 "Implementation of central welding program") EN-DC-328 & CEP-WP-006 10 CFR50.55(b)	Engineering – Design CR-WF3-2017-00462 (Status change to Historic)
2017-0008	P-21241	Improper use of soluble Weld purge on material. (UNT-007-056 R 301 "Implementation of central welding program") EN-DC-328 & CEP-WP-IGP-1 10 CFR50.55(b)	Engineering – Design CR-WF3-2017-00462 (Status change to Historic)
2017-0009	P-22470	OEE Leak from refueling cavity caused by a defective cable burning a hole in a drain line (UNT-007-056 R 301 "Implementation of central welding program") EN-DC-328 & CEP-WP-GWS 10 CFR50.55(b)	Engineering – Design CR-WF3-2017-00462 (Status change to Historic)
2017-0010	P-24637	corrective action to violation regarding failures in the welding program – mechanical maintenance procedure MM-001-050 "General Welding requirement and tool control revised to include statement SS brushes on SS components (UNT-007-056 R 301 "Implementation of central welding program") EN-DC-328 & CEP-WP-GWS 10 CFR50.55(b)	Engineering – Design CR-WF3-2017-00462 (Status change to Historic)
2017-0011	P-24729	Supplemental response to allegation R-IV 97-0098 involving site welding program, multiple issues concerning filler material control SS fabrication lack of QWI inspections, working on incorrect components EN-DC-328 & QAPM B.10(11) 10 CFR50.55(b) (UNT-007-056 R 301 "Implementation of central welding program")	Engineering – Design CR-WF3-2017-00462 (Status change to Historic)
2017-0012	P-24731	Supplemental response to allegation R-IV 97-0098 involving site welding program, multiple issues concerning filler material control SS fabrication lack of QWI inspections, working on incorrect components EN-DC-328 & QAPM B.10(11) 10 CFR50.55(b) (UNT-007-056 R 301 "Implementation of central welding program")	Engineering – Design CR-WF3-2017-00462 (Status change to Historic)
2017-0013	P-25407	Supplemental response to allegation R-IV 97-0098 involving site welding program, multiple issues concerning filler material control SS fabrication lack of QWI inspections, working on incorrect components EN-DC-328 & QAPM B.10(11) 10 CFR50.55(b) (UNT-	Engineering – Design CR-WF3-2017-00462 (Status change to Historic)

Commitment Change Summary Report

CCEF Number	Commitment Number	Commitment Description	Reason for Change/Deletion
		007-056 R 301 "Implementation of central welding program")	
2017-0014	P-5304	Inspection of prerequisite processes such as bolting and welding (UNT-010-003 R 4 "Control of Special Processes") Engineering – Design QAPM B.10(11) 10 CFR50.55(b)	Engineering – Design CR-WF3-2017-00462 (Status change to Historic)
2017-0015	P-5524	General quality assurance requirements for protective coatings applied to nuclear facilities UNT-010-003 R 4 "Control of Special Processes" QAPM B.10(11) 10 CFR50.55(b)	Engineering – Design CR-WF3-2017-00462 (Status change to Historic)
2017-0016	P-5325	Qualification splices of reinforcing bar by each splice-crew member - QAPM B.10(11) 10 CFR50.55(b)	Engineering – Design CR-WF3-2017-00462 (Status change to Historic)
2017-0017	P-5328	Visual inspection of completed structural steel mechanical splices. UNT-010-003 R 4 "Control of Special Processes" QAPM B.10(11) 10 CFR50.55(b)	Engineering – Design CR-WF3-2017-00462 (Status change to Historic)
2017-0018	P-17284	In service inspection/examination – repairs and replacements. EN-DC-342 UNT-010-003 R 4 "Control of Special Processes"	Engineering – Design CR-WF3-2017-00462 (Status change to Historic)
2017-0019	P-10801	Inservice examination of pressure vessel stud bolting should be performed in accordance with Section XI of the ASME Code – RG 1.65 section C.4 R0 10/1/1973 (RG revised to R1)	Engineering – Design (Revised Commitment)
2017-0020	P-11685, P-15186	Document the use of the SAT process for licensed operator requalification training.	Training (Revised Commitment)
2017-0021	P-27262	Safe guards information – security compensatory measure	Security (Cancelled Commitment)
2017-0022	P-27257	Safeguards information – security compensatory measure #5 OCA surveillance requirements provided. Temporary Post order.	Security (Cancelled Commitment)
2017-0023	P-27506	No procedure describing how to implement the two-person rule IAW 10CFR 73.55(G)(4)(ii) PS-016-103 implements this rule now	Security (changed status to Historic)
2017-0024	P-4346, P-4366, P-4687, P-9794, P-9795, P-9797, P-9802, P-10111, P-10490, P-10558, P-11722, P-11723, P-11724, P-12572, P-15280, P-15428, P-20283, P-20523, P-20524, P-21421, P-21521, P-21859, P-22253, P-22264,	Efficiency Bulletin 17-06 includes a change management plan action to remove any identified NRC commitments from procedures using NEI 99-04 guidance. All licensing commitments currently implemented in EN-DC-115 were reviewed and these commitments were determined to have been previously implemented and may now be removed from continuing tracking	Corporate Headquarters Direction) Changed to Historic (Ref WTHQN-2017-002(Nuclear Promise 61 CA 13)

Commitment Change Summary Report

CCEF Number	Commitment Number	Commitment Description	Reason for Change/Deletion
	P-22269, P-22306, P-22327, P-00454, P-23032, P-23229, P-23528, P-23753, P-23798, P-25022, P-25023, P-25025, P-25120, P-25693, P-26866, P-26868, P-26869, P-26870, P-9783, P-12917, P-17973, P-20485, P-14180		
2017-0025	P-5603, P-5610, P-5615, P-5621, P-5625, P-5627, P-5628, P-5629, P-5631, P-5635, P-5638, P-5639, P-5643, P-5646, P-5647, P-5648, P-5650, P-5653, P-5656, P-5657, P-5660, P-5661, P-5664, P-5665, P-5668, P-5669, P-5671, P-5673, P-5675, P-5683, P-5684, P-11759, P-13085, P-13090, P-13091, P-13094, P-13096, P-13099, P-15664, P-15711	Commitment review performed on procedure EN-RW-102 "Radioactive Shipping Procedure" determined that the commitments referenced (Obligations) should be made historic as it is no longer necessary to track.	Radiation Protection Department (Changed commitments to Historic) for EN-RW-102.
2017-0026	P-21770	Procedure MM-006-209 implementing document added. Commitment Review performed on new procedure MM-006-209 R0 "ED Fuel Injector Pump Replacement and Balancing"	New Procedure
2017-0027	P-4398, P-15322, P-17327	Preventative Maintenance and surveillance program for Reactor Trip Breakers ME-004-155 – NRRGL 83-28 section 4.2.1 & 4.2.2	Change frequency of breaker maintenance interval from 24 Months to 36 Months – The original 1983 one year PM frequency was established based on

Commitment Change Summary Report

CCEF Number	Commitment Number	Commitment Description	Reason for Change/Deletion
			commitments to the NRC due to problems that the industry was having with AK breakers. The periodicity for performing PM activities was previously revised from 12 Months to 2 years per CCEF 2005-0011. Data points support extension of the PM interval for AK Breakers to 36 Months.
2017-0028	P-2688	Administrative Controls – secondary water chemistry (Obligation)	Editorial change CE-001-002 procedure being changed to EN-CY-100.
2017-0029	P-15627	Remp Records (Obligation)	Editorial change CE-001-002 procedure being changed to EN-CY-100.
2017-0030	P-14982	Secondary Water Chemistry Monitoring Program	Editorial change CE-001-002 procedure being changed to EN-CY-100.
2017-0031	P-20605	Missed samples due to inadequate controls – LER 87-025	Editorial change CE-001-002 procedure being changed to EN-CY-100.
2017-0032	P-5845	CEA Symmetry test to be performed at beginning of each refuel cycle (FSAR 04 2.4.4)	Changed to Historic – this commitment no longer applies due to changes in WF3 startup testing changes implemented through the Startup Test Activity Reduction program (STAR)
2017-0033	P-4894	CEA Symmetry test to be performed at beginning of each refuel cycle (SER 4.2.3.3)	Changed to Historic – this commitment no longer applies due to changes in WF3 startup testing changes implemented through the Startup Test Activity Reduction program (STAR)
2017-0034	P-13437	Methods of maintaining Exposures ALARA during sampling	Changed commitment to Historic Due to site processes and Radiation Work Permits this commitment no longer useful and methods of maintaining ALARA are outlined in CE-003-327
2017-0035	P-2688, P-14982, P-15627, P-20605	Administrative Controls – Secondary Water Chemistry (TS 6.8.4.c)	Obligations are not being tracked as text changes due to plans to eliminate obligation tracking in CMS. Refer to the TS for current information.
2018-0001	P-4392	ECM99-010/EC-52043 Power supply for DCT sump pumps.	Switch to EB with in ½ hour changing to 45 minutes per Calculation changes. (Revision to commitment)
2018-0002	P-6081, P-13536 P-17901	Shift personnel to include HP tech and a Rad Chemistry Tech.	Tracked greater than 2 years with procedures in place – (changed to Historic.)
2018-0003	P-13540, P-14981	SG secondary side water chemistry monitoring program.	Tracked greater than 2 years with procedures in place – (changed to Historic.)
2018-0004	A-27448 changing to P-27448	Cyber Security Plan implemented Milestone 8 12/15/2017	Passive commitment put in place to maintain fleet security procedures