JULY 25 1979

Distribution
Docket Files 50-280 and 50-281
NRC PDR (2)
Local PDR
OR B Reading
NRR Reading
W. Gammill
D. Eisenhut
B. Grimes
T. J. Carter
W. Russell
A. Schwencer
D. Neighbors
C. Parrish
J. Diodato
P. Kreutzer
OI&E (3)
J. Cook, OELD
J. Buchanan
TERA
ACRS (16)

Docket Nos. 50-280
and 50-281

Mr. W. L. Proffitt
Senior Vice President - Power
Virginia Electric and Power Company
Post Office Box 26666
Richmond, Virginia 23261

Dear Mr. Proffitt:

On September 14, 1978 we requested that you perform environmental qualification testing on Continental Instrumentation Cable used at Surry Power Station, Units 1 and 2 in safety related areas, and provide the results for our review. By letter dated September 29, 1978, you submitted a proposed testing program regarding this matter, and by letter dated December 15, 1978, you submitted the test report of the environmental qualification test run in accordance with this program. By letter dated May 3, 1979, you submitted additional information on the test.

Based on our review of your test results we have concluded that the Continental Instrumentation Cable in use at Surry Units 1 and 2 can perform the required function before, during and following specified abnormal environmental conditions. The details of our review are provided in the enclosed Safety Evaluation Report.

Sincerely,

Original signed by
M. Grotenhuis

for A. Schwencer, Chief
Operating Reactors Branch #1
Division of Operating Reactors

MPP3 CCP

Enclosure
Safety Evaluation Report

cc: w/enclosure
See next page

7908140463

OFFICE	ORB#DOR	DOR:ORB1	DOR:ORB3	DOR:ORB1		
SURNAME	JDiodato/jc	DNeighbors	PKreutzer	ASchwencer		
DATE	07/ /79	07/ /79	07/ /79	07/ /79		

UNITED STATES
NUCLEAR REGULATORY COMMISSION
WASHINGTON, D. C. 20555

July 25, 1979

Docket Nos. 50-280
and 50-281

Mr. W. L. Proffitt
Senior Vice President - Power
Virginia Electric and Power Company
Post Office Box 26666
Richmond, Virginia 23261

Dear Mr. Proffitt:

On September 14, 1978 we requested that you perform environmental qualification testing on Continental Instrumentation cable used at Surry Power Station, Units 1 and 2 in safety related areas, and provide the results for our review. By letter dated September 29, 1978, you submitted a proposed testing program regarding this matter, and by letter dated December 15, 1978, you submitted the test report of the environmental qualification test run in accordance with this program. By letter dated May 3, 1979, you submitted additional information on the test.

Based on our review of your test results we have concluded that the Continental Instrumentation cable in use at Surry Units 1 and 2 can perform the required function before, during and following specified abnormal environmental conditions. The details of our review are provided in the enclosed Safety Evaluation Report.

Sincerely,

Marshall Grotenhuis
for A. Schwencer, Chief
Operating Reactors Branch #1
Division of Operating Reactors

Enclosure:
Safety Evaluation Report

cc: w/enclosure
See next page

cc: Mr. Michael W. Maupin
Hunton and Williams
Post Office Box 1535
Richmond, Virginia 23213

Swem Library
College of William and Mary
Williamsburg, Virginia 23185

Donald J. Burke
U. S. Nuclear Regulatory Commission
Region II
Office of Inspection and Enforcement
101 Marietta Street, Suite 3100
Atlanta, Georgia 30303

UNITED STATES
NUCLEAR REGULATORY COMMISSION
WASHINGTON, D. C. 20555

SAFETY EVALUATION BY THE OFFICE OF NUCLEAR REACTOR REGULATION

RELATED TO THE ENVIRONMENTAL QUALIFICATION OF SAFETY RELATED CABLE

USED BY THE VIRGINIA ELECTRIC AND POWER COMPANY AT

SURRY POWER STATION, UNIT NOS. 1 AND 2

DOCKET NOS. 50-280 AND 50-281

INTRODUCTION

Virginia Electric and Power Company (VEPCO) by letter dated September 29, 1978, submitted its proposed qualification test program for determining whether certain electrical instrument cables manufactured by Continental Wire and Cable Corporation will function under environmental conditions simulating those expected within the containment of Surry Power Station Units 1 and 2, during a postulated loss of coolant accident (LOCA) or during a main steam line break (MSLB). The test program was intended to include irradiation and additional aging of the cable samples which have been in service at Surry for more than seven (7) years, exposure of the cables to a combined steam and chemical spray while electrically energized, and a comparison of the physical properties of the samples before and after the environmental exposures. Separate tests were proposed to be conducted, one to simulate the LOCA conditions and a second to test the MSLB environment.

The sample cable used in the test program was 300V, two conductor, No. 16 AWG, stranded with cross-linked polyethylene insulation and hypalon jacket (see figure A for details). The test program required seven (7) test samples to be prepared - three for the LOCA test, three for the MSLB test and one for measuring initial physical and electrical properties.

The acceptance criteria for LOCA and MSLB test were established as follows:

A. Short term for safety system initiation following an incident: The cable shall be considered acceptable if the current measurement remains between 24 and 26 milliamps during the first five minutes of the test.

B. Long term for monitoring and operator action following an incident: The cable shall be considered acceptable if the current measurement remains between 22 and 28 milliamps throughout the test.

VEPCO by letter dated December 15, 1978, submitted the test report of the environmental qualification performed by Conax Corporation on the Continental Instrument Cable in accordance with the test procedure. Additional information on the test was submitted by letter dated May 3, 1979.

7908140467

The cable samples supplied by VEPCO were cut into test samples as shown in Figures B and C.

Three test samples, thermally aged for 60 hours at 100°C and irradiated to 20 megarads (MR), were installed in the test chamber, connected, instrumented and subjected to the LOCA environment (temperature/pressure/chemical spray environment). The test chamber LOCA temperature profile is shown in Figure D. Data were collected of the measurements of voltage and current throughout the 48 hours of the test.

Three test samples, thermally aged for 60 hours at 100°C and irradiated to 20 kilorads (KR), were installed in the test chamber and subjected to the specified MSLB test environment. The test chamber MSLB temperature profile is shown in Figure E. Data were also continuously collected throughout the test period of 48 hours.

DISCUSSION

The test procedure and the tests done for qualification of the Continental Instrument Cable followed the general guidelines of IEEE Std. 323-1974.

TEST SEQUENCE

The cable samples were thermally aged, irradiated and subjected to steam pressure, temperature and chemical spray as outlined in the approved test procedure. The test sequence was in line with the sequence of IEEE Std. 323-1974.

AGING

All cable samples were subjected to accelerated aging at 60°C for 100 hours equivalent to 33 years to simulate their end-of-life condition. We have reviewed the basis provided by VEPCO letter dated May 3, 1979, for equating this 100 hour elevated temperature test to 33 years of operation at expected containment temperatures (at or below 40°C or 104°F) and find the basis acceptable.

MARGIN

By comparing the test data and the plant's temperature and pressure profiles for LOCA and MSLB events, we conclude that adequate margin per IEEE Std. 323-1974 is provided. (The temperature peak of 420°F during 20 to 90 second interval of the incident was not obtained during the test; however, the test temperature of 350°F was sustained for a period of 15 minutes to compensate for this. This deviation is provided for in the test procedure itself and is acceptable).

RADIATION

The thermally aged samples were divided into two batches - one for the LOCA test and the other for the MSLB test. The samples for the LOCA test were irradiated to obtain an integrated gamma dose of 20 MR at 1 MR/hr and the samples used in the MSLB test were irradiated to 20 KR at 1 KR/hr.

Measurements of electrical and physical properties were made in conformance with applicable industrial standards. The data presented for the test are considered satisfactory for Surry Units 1 and 2 service conditions.

OPERATION UNDER NORMAL AND ACCIDENT CONDITIONS

The electrical connections made in the tests to keep the samples energized supplying simulated loads during the period when the samples were exposed to simulated environmental conditions are satisfactory. The review of the continuous readings of the current and voltage of the samples taken during the test show that the currents were within the required limits of the acceptance criteria (one of the three samples in the MSLB test exceeded the acceptance criteria for current. However, measurements taken after the test traced this discrepancy to a decrease in resistance of a variable resistor outside the test chamber. Conax Corporation's report has conclusively established that the increased current flow in that particular test sample circuit was caused solely by the resistance decrease in that variable resistor and in no way was a result of any change in the test cable). Based on this we conclude that all LOCA and MSLB cable samples conformed to the acceptance criteria of the test procedure.

SUMMARY

Based on our review of the test results we conclude that the Continental Wire and Cable Corporation instrumentation cable tested is qualified to perform its required functions before, during and following the specified abnormal environmental conditions. The acceptability is on the basis that the tests performed were generally in line with the requirements of Regulatory Guide 1.89 (IEEE Std. 323-1974).

Environmental Consideration

We have determined that this action does not authorize a change in effluent types or total amounts nor an increase in power level and will not result in any significant environmental impact. Having made this determination,

we have further concluded that this action is insignificant from the standpoint of environmental impact and, pursuant to 10 CFR §51.5(d)(4), that an environmental impact statement or negative declaration and environmental impact appraisal need not be prepared.

Conclusion

We have concluded, based on the considerations discussed above, that: (1) because the action does not involve a significant increase in the probability or consequences of accidents previously considered and does not involve a significant decrease in a safety margin, the action does not involve a significant hazards consideration, (2) there is reasonable assurance that the health and safety of the public will not be endangered by operation in the proposed manner, and (3) such activities will be conducted in compliance with the Commission's regulations and will not be inimical to the common defense and security or to the health and safety of the public.

Date: July 25, 1979

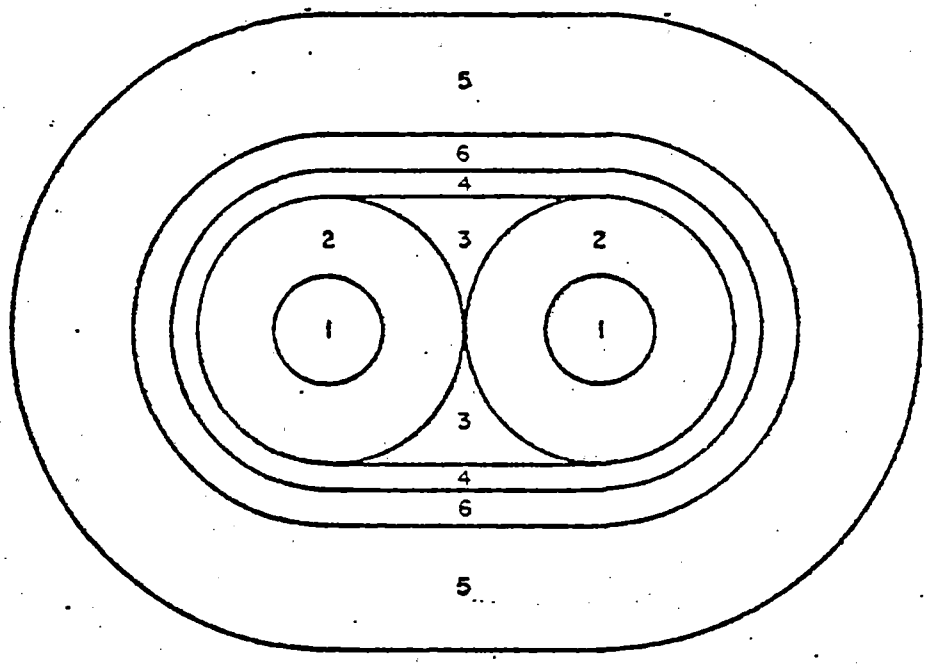

TYPE OF CABLE:

2/C #16 OVERALL SHIELD 25 MILS XLPE INSULATION.
45 MILS OVERALL *HYPALON* JACKET .38" OVERALL DIAMETER.

REGION:

1) NO.16 AWG. COPPER CONDUCTOR.
2) 25 MILS (.025") XLPE INSULATION.
3) AIR SPACE DIMENSION ASSUMED SMALL.
4) OVERALL ALUMINUM FOIL SHIELD - 2 MILS (.0020") THICK.
5) OVERALL *HYPALON* JACKET - 65 MILS (.045") THICK.
6) ASBESTOS BINDING TAPE 6 MILS (.006").

CROSS SECTION -
300V INSTRUMENT CABLE
SURRY, POWER STATION
UNITS 1 AND 2

FIG. NO. A

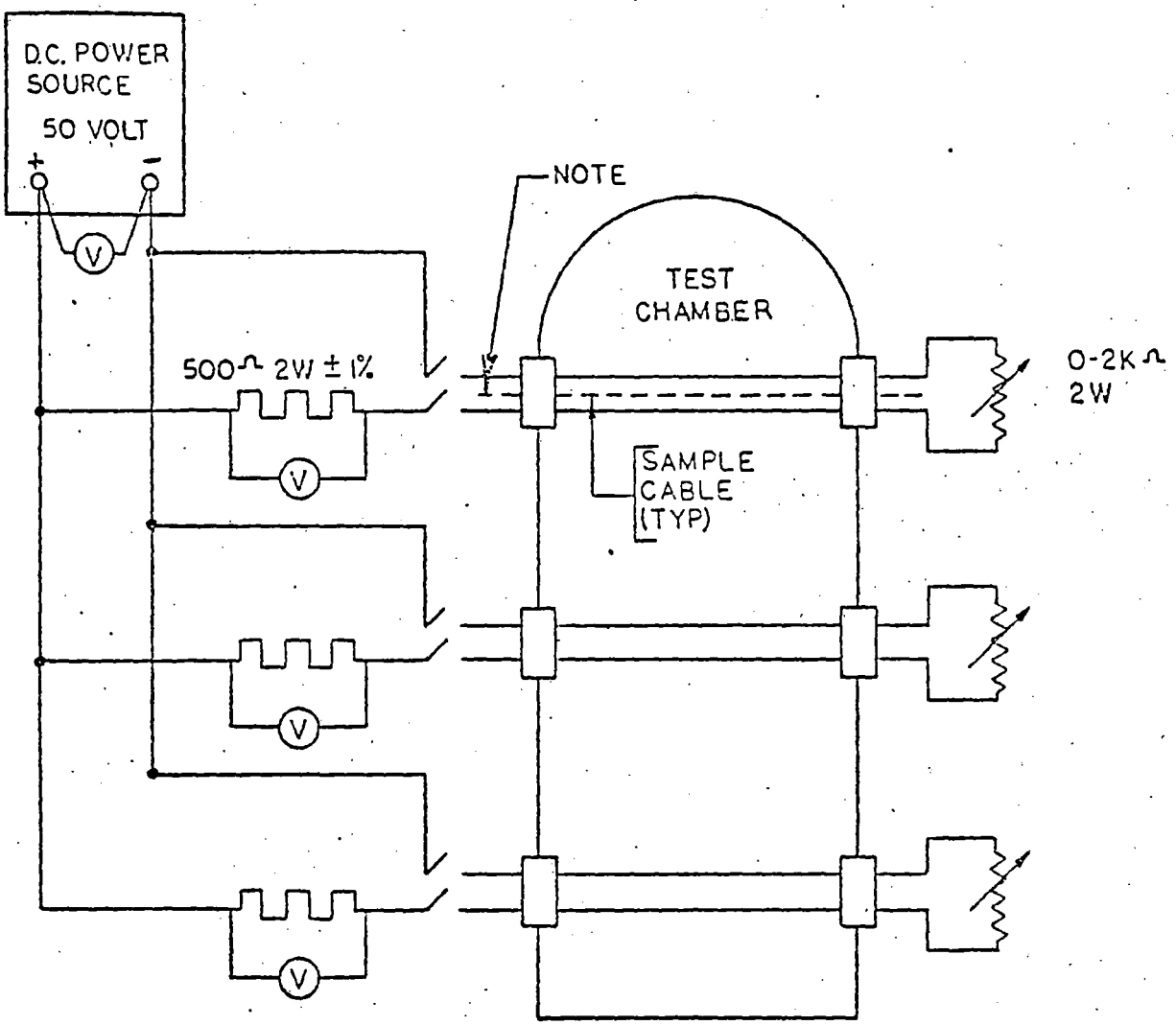

NOTE: CABLE SHIELD TO BE INSULATED FROM CONDUCTORS AND GROUND.

CHEMICAL SPRAY SOLUTION TO BE 2500 PPM BORATED WATER WITH CAUSTIC (Na OH) ADDED.
FIRST TWO HOURS $9.0 < pH < 11.0$
TWO TO FORTY EIGHT $7.0 < pH < 9.0$

FIG. NO. B

POWER INDUSTRY GROUP	TITLE SCHEMATIC OF TEST CIRCUIT		SCALE:
CHECKED			DATE:
CORRECT			
APPROVED			SKETCH NUMBER
REVISIONS ②	③	④	⑤

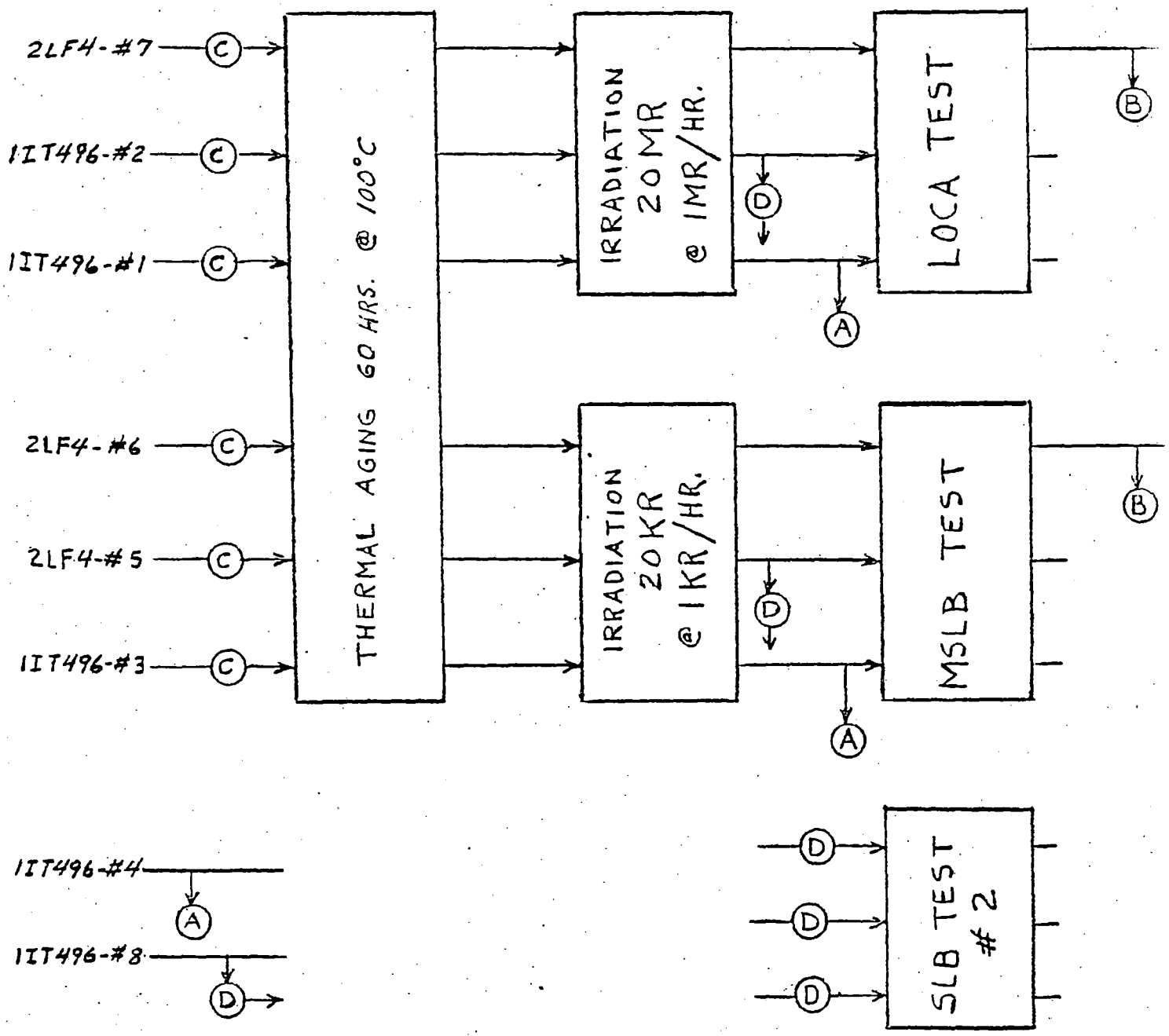

Ⓐ & Ⓑ - SAMPLE FOR PHYSICAL/ELECTRICAL PROPERTIES

FIGURE C

UTILIZATION OF CABLE SAMPLE FOR TEST SAMPLES

FIGURE D

ACTUAL LOCA TEST CHAMBER TEMERATURES

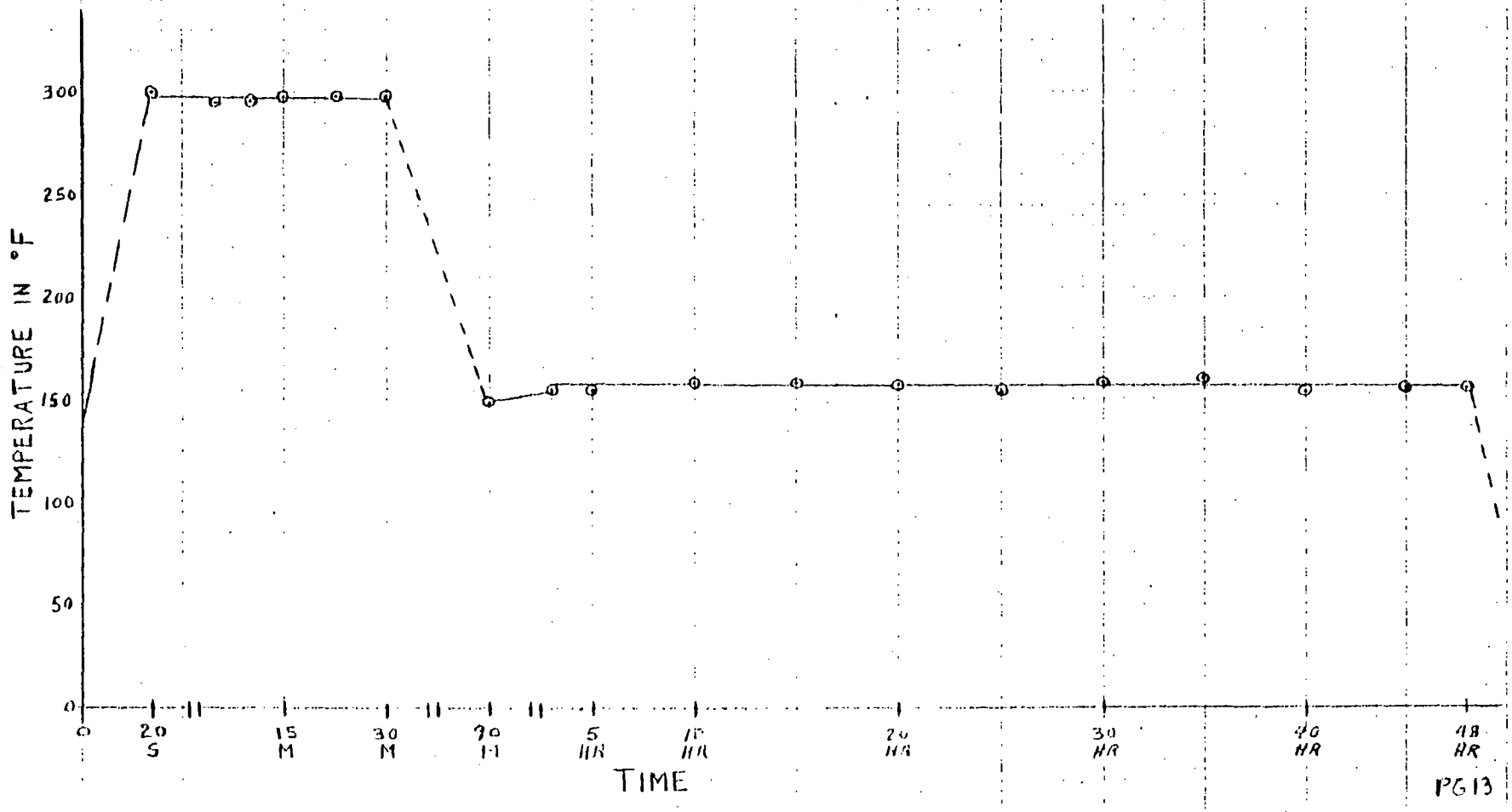

FIGURE E

ACTUAL MSLB TEST CHAMBER TEMPERATURES