Public Service
Electric and Gas
Company

E. C. Simpson
Senior Vice President - Nuclear Engineering

Public Service Electric and Gas Company P.O. Box 236, Hancocks Bridge, NJ 08038 609-339-1700

AUG 28 1995

LR-N95134

United States Nuclear Regulatory Commission
Document Control Desk
Washington, DC 20555

Gentlemen:

REQUEST FOR RELIEF FROM ASME SECTION III REQUIREMENTS - MANUAL ISOLATION VALVES IN SERIES WITH RELIEF DEVICES SALEM GENERATING STATION UNIT NOS. 1 & 2 FACILITY OPERATING LICENSE NOS. DPR-70 & DPR-75 DOCKET NOS. 50-272 & 50-311

Public Service Electric and Gas Company (PSE&G) requests, in accordance with the requirements of 10CFR50.55a(a)(3), relief from the requirements of (a) ASME Section III 1965 Edition, Winter 1966 Addenda, Article 9, Subarticle N-910.8 for the Regenerative Heat Exchanger (RHE), and (b) ASME Section III 1968 Edition, Article 9, Subarticle N-910.8 for the Volume Control Tank (VCT).

This relief would allow PSE&G to retain the installation of several manual isolation valves located in series with pressure relieving devices for the VCT and the RHE for Salem Units 1 and 2. The manual isolation valves are part of the original plant design provided by Westinghouse to facilitate maintenance of the components. The manual isolation valves are administratively controlled in the open position during plant operation to assure the overpressure protection function of the relief valves is not defeated.

A detailed discussion and technical justification for the relief request in accordance with 10CFR50.55a(a)(3) is provided in Attachment 1.

PSE&G is aware that the NRC has approved a similar relief request from this code requirement for Diablo Canyon Power Plant, Units 1 and 2.

010052

A047 1/1

AUG 28 1995

Should you have any questions on this submittal, please contact us.

Sincerely,

EC Simpson

Attachment
Affidavit

C Mr. T. T. Martin, Administrator - Region 1
U. S. Nuclear Regulatory Commission
475 Allendale Road
King of Prussia, PA 19406

Mr. L. N. Olshan,
Licensing Project Manager - Salem
U. S. Nuclear Regulatory Commission
One White Flint North
Mail Stop 14E21
11555 Rockville Pike
Rockville, MD 20852

Mr. C. S. Marschall (S09)
USNRC Senior Resident Inspector

Mr. Kent Tosch, Manager, IV
NJ Department of Environmental Protection
Division of Environmental Quality
Bureau of Nuclear Engineering
CN 415
Trenton, NJ 08625

REF: LR-N95134

STATE OF NEW JERSEY)
) SS.
COUNTY OF SALEM)

E. C. Simpson, being duly sworn according to law deposes and says:

I am Senior Vice President - Nuclear Engineering of Public Service Electric and Gas Company, and as such, I find the matters set forth in the above referenced letter, concerning Salem Generating Station Unit Nos. 1 and 2, are true to the best of my knowledge, information and belief.

E C Simpson

Subscribed and Sworn to before me
this 28 day of August, 1995

Elizabeth J. Kiel
Notary Public of New Jersey

My Commission expires on 4/25/2000

ATTACHMENT 1
REQUEST FOR RELIEF FROM ASME SECTION III REQUIREMENTS - MANUAL ISOLATION VALVES IN SERIES WITH RELIEF DEVICES

I. INTRODUCTION

Public Service Electric and Gas Company (PSE&G) requests, in accordance with the requirements of 10CFR50.55a(a)(3), relief from the requirements of (a) ASME Section III 1965 Edition, Winter 1966 Addenda, Article 9, Subarticle N-910.8 for the Regenerative Heat Exchanger (RHE), and (b) ASME Section III 1968 Edition, Article 9, Subarticle N-910.8 for the Volume Control Tank (VCT).

This relief would allow PSE&G to retain the installation of several manual isolation valves located in series with pressure relieving devices for the VCT and the RHE. The manual isolation valves are part of the original plant design provided by Westinghouse to facilitate maintenance of the components. PSE&G was notified by Westinghouse NSAL-94-009 (dated May 12, 1994) that the use of manual isolation valves in series with the inlet or discharge of relief devices does not meet the requirements of ASME Section III.

The manual isolation valves are administratively controlled in the open position during plant operation to assure the overpressure protection function of the relief devices is not defeated.

A complete description and basis for the relief request are provided in the following discussion.

II. COMPONENTS FOR WHICH RELIEF IS REQUESTED

Volume Control Tank

The components for which relief is being requested are the manual isolation valves 11BR151, 12BR151 and 13BR151 (Unit 1) and 21BR151, 22BR151 and 23BR151 (Unit 2), respectively. These manual isolation valves are located in the discharge path of relief valves 1CV241 and 2CV241 for Units 1 and 2 respectively. The relief valves provide overpressure protection for the VCT, and discharge to one of three Holdup Tanks so that radioactive gas or liquid released is contained within a closed system. (It is noted that for Unit 1, one of the three Holdup Tanks (#12) has been administratively removed from service. The associated manual isolation valve 12BR151 is maintained in the locked closed position at all times.) All components are part of the Chemical

and Volume Control System (CVCS). The manual isolation valves, excluding 12BR151, are locked open to assure an unobstructed discharge path for the relief valves .

The purpose of the manual isolation valves is to isolate individual Holdup Tanks during maintenance and testing without incapacitating the entire system or VCT overpressure protection, and to allow processing of individual Holdup Tank contents.

Figure 1 provides a schematic of the VCT relief valve/manual isolation valve configuration, and is typical for both Units.

Regenerative Heat Exchanger

The components for which relief is being requested are the manual isolation valves 1CV272 and 2CV272 for Units 1 and 2, respectively. These manual isolation valves are installed in identical configurations for both Units. The manual isolation valves are on the inlet side of spring loaded thermal relief check valves 1CV273 and 2CV273 for Units 1 and 2, respectively. The purpose of the manual isolation valves is to facilitate maintenance of the RHE's. The thermal relief check valves provide overpressure protection for the RHE's in the event of a CVCS malfunction. The check valves discharge to the Reactor Coolant System (RCS). The manual isolation valves are locked in the open position to assure an unobstructed discharge path for the thermal relief check valves.

Figure 2 provides a schematic of the RHE thermal relief check valve/manual isolation valve configuration, and is typical for both Units.

III. CODE REQUIREMENT FROM WHICH RELIEF IS REQUESTED

The VCT is constructed to the requirements of the ASME Section III 1968 Edition. The RHE is constructed to the requirements of the ASME Section III 1965 Edition and Winter 1966 Addenda. Overpressure protection requirements are stipulated in Article 9 of both the 1965 Edition, Winter 1966 Addenda and 1968 Edition of ASME Section III. Subarticle N-910.8 of Article 9 allows installation of stop valves or similar devices on the inlet or discharge of relief devices, but requires positive controls and interlocks. Article 9, Subarticle N-910.8 states the following:

ATTACHMENT 1
REQUEST FOR RELIEF FROM ASME SECTION III REQUIREMENTS - MANUAL ISOLATION VALVES IN SERIES WITH RELIEF DEVICES

"Any stop valve or similar device on the inlet or discharge side of a protective device provided in conformity with N-910.7 shall be so constructed, positively controlled and interlocked that the requirements of N-910.1 will be complied with under all conditions of operation of the system."

Section N-910.8 remained unchanged from the 1965 Edition through all Addenda of the 1968 Edition. Further, all editions through 1995 of ASME Section III contain an identical prohibition.

In response to a question concerning what is meant by the terms "controls and interlocks", ASME Section III Code Interpretation III-1-80-67R, dated March 1, 1989 states that "controls and interlocks...are pressure sensing devices which would activate the stop valve to provide fluid access to the relief valve, thereby assuring the pressure relieving function is met at all times." Interpretation III-1-80-67R also states that administrative controls such as operating procedures governing the use and application of the system may <u>not</u> be construed as "controls".

In addition, ASME Section III Code Interpretation III-1-89-25, dated March 3, 1989 indicates that the use of a manual isolation valve, with administrative controls to assure that the valve is open, does not meet the "controls and interlocks" requirements of ASME Section III.

Therefore, the location of manual isolation valves in series with a pressure relieving device without the proper "controls and interlocks" does not conform to ASME Section III requirements.

IV. PROPOSED ALTERNATIVES TO CODE REQUIREMENTS

As an alternate to the ASME Section III requirements, PSE&G proposes the current configuration as shown in the attached Figures 1 and 2, with the following administrative controls:

<u>Volume Control Tank</u>

Manual isolation valves 11BR151 and 13BR151 (Unit 1) and 21BR151, 22BR151 and 23BR151 (Unit 2), respectively are locked open and controlled in accordance with the Tagging Request Inquiry System (TRIS). (As previously noted, 12BR151 is maintained in the locked closed position because Holdup Tank #12 has been removed from service.) Administrative controls assure that at least one

manual isolation valve will be locked open when the VCT is aligned for service thereby ensuring that the VCT flowpath to the Holdup Tanks is maintained.

Regenerative Heat Exchanger

Manual isolation valves 1CV272 and 2CV272 for Units 1 and 2, respectively are locked in the open position, and controlled in accordance with TRIS when the RHE is in service.

V. BASES FOR RELIEF REQUEST

PSE&G believes the requested relief to the ASME Section III 1965 Edition, Winter 1966 Addenda, and the ASME Section III 1968 Edition requirements for the RHE and the VCT, respectively is justified in accordance with 10CFR50.55a(a)(3)(i) and 10CFR50.55a(a)(3)(ii) based on the following discussion:

10CFR50.55a(a)(3)(i)

Administrative controls are in place to assure that the manual isolation valves remain open when the VCT and RHE are operable as discussed in Section IV. These administrative controls provide an acceptable alternative to the requirements of ASME Section III and an acceptable level of quality and safety.

10CFR50.55a(a)(3)(ii)

Compliance with the specified requirements of ASME Section III would result in hardship or unusual difficulty without a compensating increase in the level of quality and safety. The manual isolation valve and relief device configurations were part of the original standard design by the NSSS vendor. Compliance with the code requirements would result in costly backfit design modifications to install controls and interlocks for the subject manual isolation valves.

The current configurations provide an acceptable level of quality and safety. The following failure consequences of each of the current configurations have been evaluated and demonstrate that there are no adverse safety consequences.

ATTACHMENT 1
REQUEST FOR RELIEF FROM ASME SECTION III REQUIREMENTS - MANUAL ISOLATION VALVES IN SERIES WITH RELIEF DEVICES

Volume Control Tank Manual Isolation Valve Failure Consequences

The VCT provides surge capacity to accommodate programmed pressurizer level changes during the normal charging mode of operation. The VCT functions are not safety related. The manual isolation valves 11BR151, 12BR151 and 13BR151 (Unit 1) and 21BR151, 22BR151 and 23BR151 (Unit 2), respectively are located in the discharge path of relief valves 1CV241 and 2CV241 for Units 1 and 2, respectively. These relief valves discharge to three parallel paths to the Holdup Tanks (Two paths for Salem Unit 1). The relief valves are not required to operate during or following a design basis accident to safely shutdown the plant.

Due to the administrative controls discussed in Section IV, the possibility of concurrent inadvertent closure of the manual isolation valves during power operation is extremely low. Nonetheless, if all manual isolation valves were postulated to be closed concurrently during operation, the pressure relief function of the relief valves would be defeated. Without overpressure protection, VCT overpressurization could potentially result in failure and release of RCS liquid and gases to the Auxiliary Building.

Chapter 15 of the Salem UFSAR provides an analysis of the consequences of a passive failure of the VCT. This analysis demonstrates that a complete failure of the VCT due to the inadvertent closure of manual isolation valves is bounded by the VCT rupture analysis contained in UFSAR Chapter 15.

Regenerative Heat Exchanger Manual Isolation Valve Failure Consequences

The RHE is designed to recover heat from the CVCS letdown flow by reheating charging flow, which reduces thermal effects on the RCS piping. The letdown stream flows through the shell of the RHE and the charging stream flows through the tubes. The RHE functions are not safety related. To preserve the integrity of the RHE in the event of a malfunction, reactor coolant on the charging side of the RHE may be relieved to the RCS through the thermal (spring loaded) relief check valves 1CV273 and 2CV273 for Units 1 and 2, respectively. Manual isolation valves 1CV272 and

2CV272 for Units 1 and 2, respectively are located upstream of the relief valves. The thermal relief check valves are not required to operate during or following a design basis accident to safely shutdown the plant.

Due to the administrative controls discussed in Section IV, the possibility of inadvertent closure of the manual isolation valve during power operation is extremely low. Nonetheless, if the manual isolation valve is postulated to be inadvertently closed during power operation, the pressure relief function of the thermal relief check valves would be defeated. Without adequate overpressure protection, RHE overpressurization could potentially result in a failure and a release of reactor coolant gases and liquid to the containment.

The Small Break Loss of Coolant Accident (SBLOCA) is analyzed in Chapter 15 of the UFSAR. The limiting case is a 4" diameter break in the RCS cold leg. Since the charging and letdown lines to and from the RHE are 3 inches in diameter and the RHE is isolable from the RCS, a postulated rupture of the RHE would result in consequences which are already bounded by the existing SBLOCA accident analysis contained in UFSAR Chapter 15.

VI. SUMMARY

PSE&G requests relief from the requirements of the ASME Section III 1965 Edition, Winter 1966 Addenda, and the ASME Section III 1968 Edition for the manual isolation valves provided in series with relief devices for the RHE and VCT, respectively. Compliance with the specified requirements of ASME Section III would result in hardship or unusual difficulty without a compensating increase in the level of quality and safety. The current plant configurations along with proposed administrative controls provide an acceptable level of quality and safety. Should the manual isolation valves be mispositioned and the relief function defeated, the consequences of losing relief capability would not result in the inability to safely shutdown the plant.

PS5NRC1

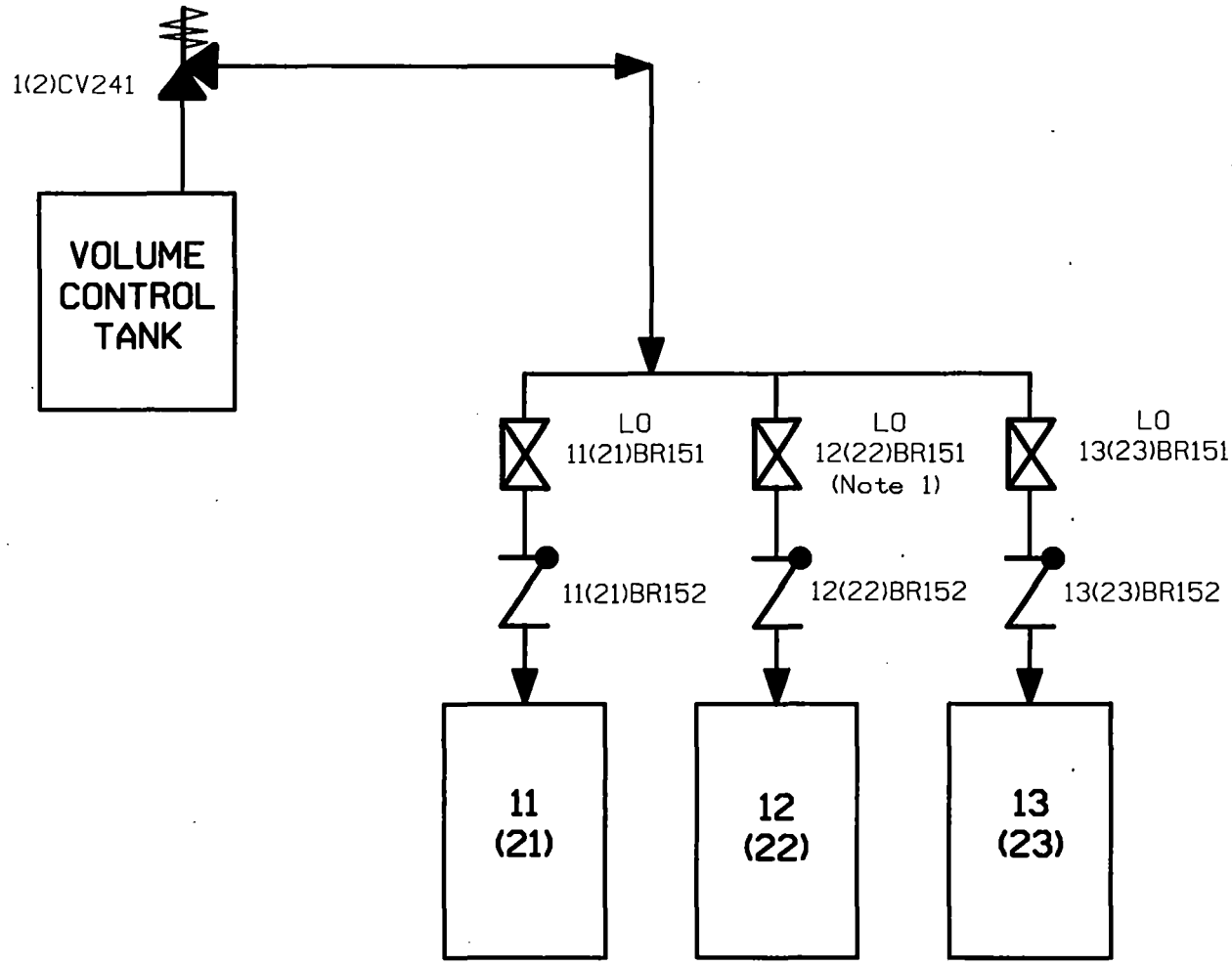

LIQUID HOLD-UP TANKS

Note 1: Salem Unit 1 Hold-up tank No. 12 has been removed from service. Manual isolation valve 12BR151 is maintained in the Locked Closed Position.

Figure 1
Volume Control Tank

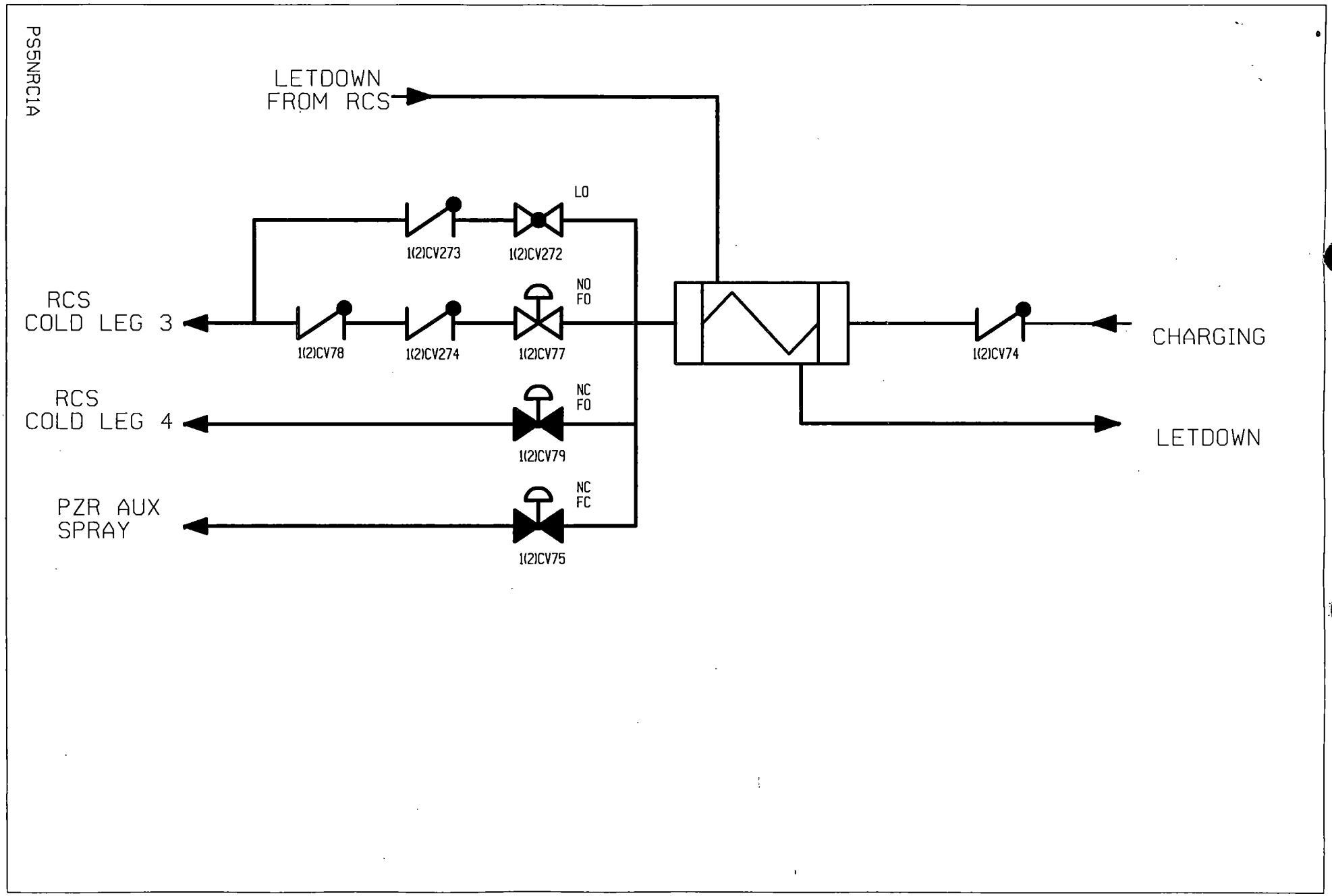

Figure 2
Regenerative Heat Exchanger