Public Service Electric and Gas Company P.O. Box 236 Hancocks Bridge, New Jersey 08038

Nuclear Department

FOR INFORMATION ONLY

TITLE: ENGINEERING EVALUATION OF SGS 1 & 2 CONTROL ROOM EVACUATION FOR FIRE INDUCED MOV HOT SHORTS AS DISCUSSED IN NRC INFORMATION NOTICE 92-18

1.0 PURPOSE

The purpose of this engineering evaluation (EE) is to reply to the NRC request to assess concerns identified in NRC Information Notice (IN) 92-18 (Ref. 5.1), regarding the potential for loss of remote shutdown capability following a Control Room evacuation due to a fire in the Control Room.

2.0 SCOPE

This EE is pertinent to all motor operated valves (MOVs) specified for use in PSE&G's Salem Unit Nos. 1 & 2 operating procedures S1(S2).OP-AB.CR-0002(Q) and Safe Shutdown Analysis (Refs. 5.2, 5.3 & 5.4). Refer to attachment 1 of this EE for a complete list of all MOVs addressed in the Control Room Evacuation procedures and Safe Shutdown Analysis.

This evaluation examined the MOVs for the potential of fire induced hot shorts as detailed in IN 92-18. IN 92-18 postulates that a fire in the Control Room could result in hot shorts between control wiring and power sources. The IN further postulates that a hot short could bypass push buttons that are normally used to operate the MOVs and thereby provide power to the relay coils, which close those contactors that provide power to drive the MOVs in the closed direction. Power would not be disconnected from the motor although it is stalled, because this hot short would bypass the torque switch of the MOVs. With the motor stalled, current and torque are abnormally high, possibly causing the motor windings to fail and possibly causing mechanical damage to the valve. This mechanical damage might be sufficient to prevent operators from manually operating valves. A similar problem is postulated for MOVs that are going in the open direction.

In addition to potential fires in the Control Room,

9311010074 931026
PDR ADOCK 05000272
Q PDR

potential fires in the Relay Room and ceiling area of the 460/230V Switchgear Room were evaluated for fire induced hot shorts as detailed in IN 92-18, since a fire in either of these areas could potentially cause the Control Room to be evacuated.

3.0 Discussion

This evaluation was performed to address an NRC request to evaluate concerns identified in IN 92-18 relative to Salem Unit Nos. 1&2 (SGS 1&2). While the concerns of IN 92-18 are considered valid, it should be noted that PSE&G's position with regards to design criteria has not changed, in that SGS 1&2 comply with the requirements of 10CFR50 Appendix R for a post-fire safe shutdown capability.

General discussions regarding IN 92-18 and SGS 1&2 redundant capability are applicable to both units. Attachment 1 is also applicable to both Unit 1 and Unit 2 valves. However, specific discussions within this EE pertaining to system/component redundancies will be limited to Unit 1 systems and components only for ease and clarity. Unit 2 systems and components are similar. In addition, this EE considers the inability of a valve to operate in the least conservative direction relative to achieving a post-fire safe shutdown condition.

There are 65 valves specifically addressed within the SGS 1&2 Control Room evacuation procedure and Safe Shutdown Analysis. These valves are listed in Attachment 1. As a part of this evaluation, the schematics and wiring diagrams for all 65 valves listed in Attachment 1 were reviewed. These drawings were reviewed to determine which cables associated with the valves were routed through the Control Room, Relay Room or ceiling area of the 460/230V Switchgear Room. As stated previously, a fire in any one of these areas could potentially cause the Control Room to be evacuated.

The majority of cables reviewed, which are routed to the Control Room are 28VDC control cables. This is due to SGS 1&2 Control Rooms being equipped with 28VDC control systems. This 28VDC system operates such that the push button in the Control Room is not wired directly into the valve 115VAC control circuit, as is typical for most plants. Instead the push button is wired into a 28VDC

system which runs between the Relay Room and Control Room. The push button energizes a 28VDC relay with contacts wired into the 115VAC control circuit, which controls actuation of the valve.

A fire in the Control Room or Relay Room could cause a hot short in the 28VDC cabling, thereby possibly causing a 28VDC relay to energize spuriously. The energized relay could potentially cause the valve to operate spuriously. However, the torque and limit switches would still be available to protect the valve from damage, since the hot short is independent from the 115VAC control circuit. As such an IN 92-18 hot short would have no affect if within the 28VDC system.

The remaining cables associated with the MOVs evaluated which enter the Control Room are 115VAC cables. These cables are associated with the Solid State Protection System. Unlike the 28VDC system cables which are applicable to all MOVs evaluated, not all valves are wired to the Solid State Protection System. Therefore, not all valves have 115VAC control cables entering the Control Room. These 115VAC cables, in addition to the 28VDC cables, are all bottom entry into the Control Room consoles and cabinets via the Relay Room.

Refer to figures 1&3 for simplified schematics of the control circuits (both 115VAC and 28VDC) for MOVs at SGS 1&2.

All 65 valves evaluated have 115VAC cables routed to the Relay Room via the ceiling area of the 460/230v Switchgear Room. These cables enter the TP cabinets by bottom entry. The TP cabinets are wired to the RC cabinets via 115VAC cables which are routed in the trenches in the floor of the Relay Room below the cabinets. The RC cabinets provide the interface for the 115VAC control circuit with the 28VDC control circuit. Therefore, the only cables of concern with regards to the RC cabinets are the 115VAC cables routed in the trench.

In most cases, the only 115VAC cables routed through the Relay Room cable trays are those cables associated with the Solid State Protection System. The remaining 115VAC cables, routed through the Relay Room cable trays, are locally routed cables which run between cabinets in the Relay Room.

As stated previously, all 65 valves have cables routed through the ceiling area of the 460/230V Switchgear Room.

Since the 28VDC cables are not susceptible to the hot short detailed in IN 92-18, they were not reviewed. However all 115VAC cables associated with the MOVs evaluated, which are routed through the Control Room, Relay Room or the ceiling area of the 460/230V Switchgear Room, were reviewed for the potential hot short detailed in IN 92-18.

Refer to figure 2 for a simplified cable block diagram for the 65 valves. Figure 2 depicts only the Control Room, Relay Room and ceiling area of the 460/230V Switchgear Room, since these are the only areas of concern with regards to a fire which could potentially cause the Control Room to be evacuated. Figure 2 depicts the low voltage cabling between the Control Room and Relay Room as well as the cabling between the MCC and Solid State Protection System. As stated previously, the cabling for the Solid State Protection System is not applicable to all MOVs.

3.1 Valves not Susceptible to IN 92-18 Hot Shorts

Fourteen (14) valves evaluated by this EE are not considered susceptible to the hot short detailed in IN 92-18 due to the wiring configuration of their torque and limit switches. The torque and limit switches are wired such that they interpose the Control Room wiring and the MCC (e.g., the torque and limit switches are located electrically between the Control Room wiring and MCC). Therefore, should an IN 92-18 hot short occur, then the torque and limit switches of these 14 valves will not be bypassed. As such, the valves will not be damaged as described in IN 92-18 and will be available to achieve a safe shutdown condition. The existing torque and limit switch configuration for these 14 valves is similar to the solution proposed in IN 92-18.

Figure 1 depicts how the torque and limit switches interpose the Control Room wiring and MCC.

The fourteen valves which are wired in this manner are as follows:

Valve	
1RH1	11SJ44
1RH2	11SJ49
11RH4	12SJ44
11RH19	12SJ49
12RH4	11CC16
12RH19	12CC16
1SJ69	1CV175

It is noted that 1RH1 and 1RH2 have their power removed after being placed in their normal operating position, by the opening of their breakers. In addition, the 1RH1 & 1RH2 torque and limit switches are wired such that they are not susceptible to the hot short detailed in IN 92-18. However, the removal of power to 1RH1 and 1RH2 further ensures that these valves will not be damaged by the hot short detailed in IN 92-18, since no power would be available to the valve motor to allow valve movement.

3.2 Valves Susceptible to In IN 92-18 Hot Shorts

The remaining 51 MOVs evaluated by this EE are considered susceptible to the hot short detailed in IN 92-18. These 51 valves are susceptible to the hot short because their torque and limit switches do not interpose the Control Room wiring and MCC. The torque and limit switches for these valves interpose the 115VAC power source and the actuation contact. Therefore the potential exists for a fire induced hot short, which shorts the 115VAC power source to the 115VAC actuation relay, to bypass the torque and limit switches and potentially cause valve damage.

Figure 3 depicts how the torque and limit switches interpose the 115VAC power source and the actuation contact.

The valves at SGS 1&2 considered susceptible to the hot short detailed in IN 92-18 are as follows:

11BF13	1CC31	11CC3	1CV139	1SJ1	12SJ54	11SW22
12BF13	1CC117	12CC3	1CV140	1SJ2	13SJ54	11SW23
13BF13	1CC118	1CV40	1CV284	1SJ4	14SJ54	12SW17
14BF13	1CC131	1CV41	1PR6	1SJ5	1SW26	12SW20
1CC17	1CC136	1CV68	1PR7	1SJ12	11SW17	12SW21
1CC18	1CC187	1CV69	11RH29	1SJ13	11SW20	12SW22
1CC30	1CC190	1CV116	12RH29	11SJ54	11SW21	12SW23
13SW20	14SW20					

3.3 Redundancy

SGS 1&2 are unique in that the operations personnel are not restricted to the use of one shutdown path, as is typical for most plants in response to a Control Room fire. The operators are able to utilize the system and/or component redundancies of SGS 1&2. If a fire in the Control Room resulted in a IN 92-18 hot short which damaged a safe shutdown valve, then a redundant component or system could be utilized to perform the same function.

As stated previously, SGS 1&2 comply with requirements of GL 86-10 Section 5.3.10 which direct that, "The safe shutdown capability should not be adversely affected by any one spurious actuation or signal resulting from a fire in any plant area." Based upon this guidance, this evaluation considers only one credible spurious valve operation. Therefore, plant operators would still be able to achieve a safe shutdown condition through the use of independent and redundant components or systems.

The following is a brief description of redundancies which will allow for other paths to achieve a safe shutdown condition. These descriptions are detailed separately for the safe shutdown systems which contain the MOVs of concern.

3.3.1 Service Water

The Service Water System is used to remove the heat produced by various shutdown systems and

equipment. The Service Water System is divided into two safety-related headers (11 & 12) and a turbine building header. Two of the six Service Water pumps are required to achieve a safe shutdown condition with the turbine building header isolated. Each header is equipped with three pumps. As such, either header has adequate pumping capacity to achieve a safe shutdown condition.

The Service Water valves utilized by the Control Room evacuation procedures are normally open valves. All of these valves, with the exception of 1SW26, remain open for a post-fire safe shutdown. If any one of the normally open valves should close due to an IN 92-18 hot short, then the redundant header would be available. If 1SW26 (which isolates the turbine building header) is unable to be closed due to an IN 92-18 hot short, then 11SW20 and 13SW20 would be available to isolate the header. If either 11SW20 or 13SW20 are unable to be closed, then 1SW26 would be available to isolate the header. Closure of 11SW20 or 13SW20 will not preclude the utilization of either safety-related header.

3.3.2 Charging

The Charging shutdown function controls the concentration of boric acid and the water inventory of the Reactor Coolant System. The Charging shutdown function is provided by the Charging Pumps aligned to the Refueling Water Storage Tank (RWST) injecting through either the normal Charging lines or the Safety Injection lines with the Volume Control Tank (VCT) isolated.

To isolate the VCT, either 1CV40 or 1CV41, which are normally open and in series, must be closed. If either one of these valves are unable to be closed due to an IN 92-18 hot short, then the other series valve would be available to isolate the VCT.

To draw suction from the RWST, either 1SJ1 or 1SJ2, which are normally closed and in parallel, must be open. If either one of these valves are unable to be opened due to an IN 92-18 hot short, then the other parallel valve would be available to allow for suction from the RWST.

When utilizing the Safety Injection header, either 1SJ4 or 1SJ5, which are normally closed and in parallel, must be open and either 1SJ12 or 1SJ13, which are normally closed and in parallel, must be open. If any one of these valves are unable to be opened due to an IN 92-18 hot short, then the other parallel valve would be available to provide for a flow path through the safety injection header.

When utilizing the Safety Injection header, the normal Charging line must be isolated by closing either 1CV68 or 1CV69, which are normally open and in series. If either one of these valves are unable to be closed due to an IN 92-18 hot short, then the other valve would be available to isolate the normal charging line.

When utilizing either centrifugal Charging Pump No. 11 or 12, 1CV139 and 1CV140, which are normally open and in series, must remain open for recirculation. If either of these valves are unable to remain open due to an IN 92-18 hot short (thereby isolating recirculation for the pump), then the pump may be damaged. However, positive displacement pump No. 13, which does not require recirculation, would be available to maintain the Charging shutdown function.

3.3.3 Component Cooling

The Component Cooling shutdown function provides Component Cooling Water to cool various pumps and heat exchangers during the post fire shutdown process. The Component Cooling Water System utilizes three pumps and

two heat exchangers in a two header arrangement for the Emergency Core Cooling System (ECCS) function and a common header for all auxiliaries. Two pumps are capable of serving both ECCS headers and the common header.

To provide flow to the three pumps and two headers, normally open MOVs (considered susceptible to the IN 92-18 hot short) 1CC17, 1CC18, 11CC3, 12CC3, 1CC30 and 1CC31 must remain open.

MOVs 1CC17, 1CC18, 11CC3 and 12CC3 are cross over valves. Valves 1CC17 and 1CC18 are on the suction side of the Component Cooling Pumps and 11CC3 and 12CC3 are on the discharge side. If either 1CC17 or 1CC18 are unable to remain open due to an IN 92-18 hot short, then the other suction cross over valve would be available to provide flow to at least two Component Cooling Pumps. If either 11CC3 or 12CC3 are unable to remain open due to an IN 92-18 hot short, then the other cross over valve would be available to provide for flow to both headers.

The two Component Cooling Heat-Exchangers feed the common header. Each Component Cooling Heat-Exchanger has a header stop valve which isolates it from the common header. The stop valves 1CC30 and 1CC31 (considered susceptible to an IN 92-18 hot short) must remain open for a post-fire safe shutdown. If either of these valves are unable to remain open due to an IN 92-18 hot short, then the other valve would be available to allow a Component Cooling Heat-Exchanger to cool the common header.

To provide cooling to the Reactor Coolant Pumps, isolation valves 1CC117, 1CC118, 1CC131, 1CC136, 1CC187 and 1CC190 (considered susceptible to an IN 92-18 hot short) must remain open. If any one of these valves are unable to remain open due to an IN 92-18 hot short, then the cooling water to the Reactor Coolant Pumps would either be limited or

precluded (depending on which valve failed). However the RCP Seal Cooling system (which is discussed later in this EE) would be available to provide adequate cooling to the Reactor Coolant Pumps.

3.3.4 RCP Seal Cooling

The RCP Seal Cooling shutdown function ensures the integrity of the Reactor Coolant Pump seals; thereby assisting in Reactor Coolant System inventory control. RCP Seal Cooling is provided by seal injection flow from the Charging Pumps. Normal return flow for the RCP Seal Cooling system is via isolation valves 1CV116 & 1CV284. Similar to the Component Cooling shutdown function, the RCP seal cooling shutdown function may be precluded by closure due to an IN 92-18 hot short of either normally open isolation valve 1CV116 or 1CV284. However, the return flow could be routed to the Pressurizer Relief Tank (PRT) via relief valve 1CV115 to achieve a safe shutdown condition. In addition, the Component Cooling shutdown function would be available to provide adequate cooling to the Reactor Coolant Pump seals to achieve a safe shutdown condition if 1CV116 or 1CV284 were to fail due to an IN 92-18 hot short.

3.3.5 Residual Heat Removal

The Residual Heat Removal shutdown function provides for long term decay heat removal. The Residual Heat Removal (RHR) system provides two redundant flow paths. Only one flow path is required to achieve a safe shutdown condition. 11RH29 and 12RH29 are redundant recirculation valves for each RHR pump. If either normally open 11RH29 or 12RH29 fail to remain open due to an IN 92-18 hot short (thereby isolating recirculation for the pump), then the pump may be damaged. However the other RHR pump and flow path would be available to achieve a safe shutdown condition.

3.3.6 Reactor Depressurization

The Reactor Depressurization shutdown function ensures a means to depressurize the Reactor Coolant System during the cooldown process. Depressurization is accomplished through use of either the Pressurizer auxiliary spray from the Charging System, the Pressurizer Power-Operated Relief Valves (PORV) or the reactor vessel head vent valves.

Upon evacuation of the Control Room, PORV Block valves 1PR6 & 1PR7 are closed to preclude rapid depressurization. With 1PR6 & 1PR7 closed, pressurizer auxiliary spray from the charging system and reactor vessel head vent spray are available for depressurization. If either of the valves are unable to be closed due to an IN 92-18 hot short (thereby preventing the isolation of their line) then 1PR1 and 1PR2 (which are downstream of 1PR6 and 1PR7) would be available to isolate the lines to achieve a safe shutdown condition. Valves 1PR1 and 1PR2 are air operated valves (AOVs) and are therefore not susceptible to an IN 92-18 hot short.

3.3.7 Main Feedwater Isolation

For post-fire shutdown, the Main Feedwater headers to the steam generators are isolated to prevent over-filling and over-cooling transients. On loss of power (offsite) and main steam line isolation, the feed water pumps would normally be (automatically) tripped. However, to ensure feedwater pumps are tripped, the Control Room evacuation procedure procedurally trips the pumps. If any one of the isolation valves 11BF13, 12BF13, 13BF13 or 14BF13 are unable to be closed due to an IN 92-18 hot short (thereby preventing the isolation of Main Feedwater), then the manual tripping of the feedwater pumps would ensure that the Main Feedwater headers are isolated.

3.3.8 Accumulator Isolation

The Accumulator System provides the initial suppression for the large loss-of-coolant (LOCA) transients. The Accumulator System is a passive system which is independent of any detection or actuation signals.

The Accumulator System which is comprised of four (4) redundant accumulators (1SJE6, 1SJE7, 1SJE8 & 1SJE9) is normally aligned with the accumulator isolation valves (11SJ54, 12SJ54, 13SJ54 & 14SJ54) open and their power locked out to prevent closure. Flow from the four (4) accumulators is precluded by check valves which are closed due to Reactor pressure being greater than the pressure in the accumulators.

As defined in the SGS Updated Final Safety Analysis Report (USFAR) Section 7.3 during the injection phase of a large break LOCA it is required that flow be injected into three (3) of the four cold legs (one leg is assumed to dump to the floor).

To prevent draining of the four accumulators during a post-fire safe shutdown, the isolation valves are closed when the RCS pressure decreases below 1000 psig. If any one of these isolation valves fails to close due to IN 92-18 hot short, then the associated accumulator would not be isolated thereby potentially draining the accumulator and injecting nitrogen into the RCS system. However, the remaining three (3) redundant accumulators would be isolated and available for a LOCA.

It is noted that Accumulator Isolation is not defined as a safe shutdown system, since accumulator isolation does not provide a flow path which is utilized to achieve a post-fire safe shutdown. The accumulators provide for restoration of the reactor water level in case of a LOCA.

To summarize system/component redundancies. Attachment 1 lists at least one valve or system which could be utilized to achieve a safe shutdown condition in lieu of a valve which has misoperated due to an IN 92-18 hot short. In addition, Attachment 1 lists the safe shutdown system with which the valve is associated.

4.0 CONCLUSIONS/RECOMMENDATIONS

Evaluation of the 65 MOVs addressed by the Control Room evacuation procedure and Safe Shutdown Analysis has revealed that 14 of the valves are not considered susceptible to the hot short detailed in IN 92-18 and 51 valves are considered susceptible to the hot short.

Fourteen (14) valves are not susceptible because of the manner in which the torque and limit switches are wired. The torque and limit switches interpose the Control Room wiring and the MCC (see figure 1). Therefore an IN 92-18 postulated hot short would not bypass the torque and limit switches, although it could potentially cause spurious valve actuation. The existing wiring of these torque and limit switches is similar to the solution proposed in IN 92-18.

The remaining 51 valves are considered susceptible to the hot short detailed in IN 92-18, since their torque and limit switches interpose the 115VAC power source and the actuation contact of the 28VDC relay, thereby providing the potential for a hot short from the 115VAC power source to the 115VAC actuation relay (see figure 3). However, due to the system/component redundancies at SGS 1&2, failure of any one of these valves would not preclude a post-fire safe shutdown condition.

The redundancy of the service water system ensures that should any one valve misoperate, a redundant component (or components) would be available to achieve a safe shutdown condition.

The redundancy of the charging shutdown function, with two separate lines available and one out of three charging pumps required for a post-fire shutdown, ensures that the charging shutdown function will be available to achieve a safe shutdown condition.

The redundancy of the component cooling system ensures that two of the three Component Cooling Pumps as required will be available and that at least one flow path to the common header will be available to provide adequate component cooling to achieve a safe shutdown condition.

RCP Seal cooling is normally provided by the seal injection flow through the charging pumps and by the circulation of Component Cooling Water through the thermal barrier heat exchanger. Both sources are required for normal operation, however pump operation is permitted with the loss of either or both cooling sources for a limited prescribed time period. The redundancy of the RCP Seal Cooling shutdown function and Component Cooling shutdown function ensures that at least one system will be available to provide adequate cooling to the RCP seals to achieve a safe shutdown condition.

The redundant flow paths of the RHR shutdown function, with only one of the flow paths required for a post-fire safe shutdown, ensures that the RHR shutdown function will be available to achieve a safe shutdown condition.

The redundant and parallel 1PR1 & 1PR2, which are in-series to the PORV block valves 1PR6 & 1PR7 respectively, ensure that the PORV valves will be able to be isolated to achieve a safe shutdown condition.

Misoperation of an accumulator isolation valves due to an IN 92-18 hot short would not preclude a post-fire safe shutdown, since the accumulators do not provide a post-fire safe shutdown flow path.

The redundancy of the four (4) accumulators ensures that should any one accumulator fail to be isolated, then the remaining three (3) accumulators would be available for a LOCA. As stated previously, only three of four accumulators are required during the injection phase of a large break LOCA. Therefore, the misoperation of an accumulator isolation valve due to an IN 92-18 hot short does not create the possibility of an accident or malfunction of a different type than any previously evaluated in the UFSAR.

As such, it is the conclusion of this EE that although 51 MOVs are considered susceptible to the hot short detailed in IN 92-18, adequate system and/or component redundancies are available at SGS 1&2 to achieve a post-fire safe shutdown

condition. SGS 1 & 2 Control Room and equipment operators are trained in the operation of plant systems and their redundancies. Additionally, an approved evacuation procedures (Ref. 5.2 & 5.3) and alternate shutdown equipment operating instructions (Ref 5.5) are available to assist in the operation of selected safe-shutdown systems.

Therefore, if any one of 51 MOVs should misoperate due to the hot short detailed in IN 92-18, the SGS 1 or 2 Operations Department will be able to achieve a safe shutdown condition by utilizing a redundant component or system to perform the same function as the misoperating valve.

It is the recommendation of this EE that the accumulator isolation valves 11SJ54, 12SJ54, 13SJ54 and 14SJ54 be further evaluated, beyond the scope of an IN 92-18 hot short, but for the potential of nitrogen being injected into the RCS system should any one of these valves be unable to be closed for any reason when the reactor being depressurized.

5.0 REFERENCES

5.1 NRC Information Notice 92-18: Potential for Loss of Remote Shutdown Capability During a Control Room Fire, February 28, 1992

5.2 S1.OP-AB.CR-0002(Q)-Rev. 3: Control Room Evacuation Due to Fire in the Control Room, Relay Room, or Ceiling of 460/230V Switchgear Room

5.3 S2.OP-AB.CR-0002(Q)-Rev. 3: Control Room Evacuation Due to Fire in the Control Room, Relay Room, or Ceiling of 460/230V Switchgear Room

5.4 DE-PS.ZZ-0001(Q)-A3-SSA Salem Fire Protection Report-Safe Shutdown Analysis

5.5 SGS Fire Related Alternate Shutdown Equipment Operating Instruction

5.6 Schematics

5.6.1 203888 - No. 1 Unit Service Water Intake 1B 230V Vital Bus Isol Valve 1SW26

5.6.2	203893	-	No. 1 Unit Service Water Intake 1C 230V Vital Bus Tie Valve No. 11SW17
5.6.3	203894	-	No. 1 Unit - Service Water Intake 1C 230V Vital Bus Isol Valve No. 12SW20
5.6.4	203895	-	No. 1 Unit - Service Water Intake 1A 230V Vital Bus Tie Valve No. 12SW17
5.6.5	211527	-	No. 1&2 Units - Component Cooling System Nos. 1CC117, 2CC117, 1CC136 & 2CC136 RCP CCW Inlet & Outlet Isol Valves
5.6.6	211528	-	No. 1&2 Units - Component Cooling System Nos. 1CC118 & 2CC118 RCPS CW Inlet & Nos. 1CC113 & 2CC113 ELHX CW Outlet Isol Valves
5.6.7	211555	-	No. 1&2 Units - Residual Heat Removal System Nos. 11RH29& 21RH29 RHRP Bypass
5.6.8	211556	-	No. 1&2 Units - Residual Heat Removal System Nos. 12RH29 & 22RH29 RHRP Bypass
5.6.9	211564	-	No. 1&2 Units - CVCS Nos. 1CV140, 2CV140, 1CV69 & 2CV69 Chg. Dish & Nos. 1CV79 & 2CV79 PCS Chg. Isolation Valves
5.6.10	211566	-	No. 1&2 Units - CVCS Nos. 1CV139 & 2CV139 Disch to SWHX & Nos. 1CV68 & 2CV68 Disch to RHX Isolation Valves
5.6.11	211578	-	No. 1&2 Units - CVCS Nos. 1SJ1 & 1SJ2 Chg. Pmp Suct. from RWST & Nos. 1CV116 & 2CV116 Seal Water to VCT Isolation Valves

5.6.12	211580	-	No. 1&2 Units - CVCS Nos. 1SJ2 & 2SJ2 Chg. Pmp. Suct. from RWST & Nos. 1CV284 & 2CV284 Seal Water to VCT Isolation Valves
5.6.13	211582	-	No. 1&2 Units - CVCS Nos. 1CV40 & 2CV40 VCT First Disch. Stop Valves
5.6.14	211583	-	No. 1&2 Units - CVCS Nos. 1CV41 & 2CV41 VCT Second Disch. Stop Valves
5.6.15	211648	-	No. 1&2 Units - Safety Injection System Boron Injection Tk Inlet & Outlet Vas 1SJ4, 2SJ4, 1SJ12, 2SJ12
5.6.16	211650	-	No. 1&2 Units - Safety Injection System Boron Injection Tk Inlet & Outlet Vas 1SJ5, 2SJ5, 1SJ13, 2SJ13
5.6.17	211669	-	(Sh 1) No. 1 Unit - Safety Injection System No. 11 Accumulator Control Valves 11SJ54, 11SJ93, 11SJ58
5.6.18	211669	-	(Sh 2) No. 2 Unit - Safety Injection System No. 21 Accumulator Control Valves 21SJ54, 21SJ93, 21SJ58
5.6.19	211673	-	(Sh 1)No. 1 Unit - Safety Injection System No. 12 Accumulator Control Valves 12SJ54, 12SJ93, 12SJ58
5.6.20	211673	-	(Sh 2) No. 2 Unit - Safety Injection System No. 22 Accumulator Control Valves 22SJ54, 22SJ93, 22SJ58
5.6.21	217127	-	(Sh 1) No. 1 Unit - Safety Injection System No. 13 Accumulator Control Valves 13SJ54, 13SJ93, 13SJ58

5.6.22	217127	-	(Sh 2) No. 2 Unit - Safety Injection System No. 23 Accumulator Control Valves 23SJ54, 23SJ93, 23SJ58
5.6.23	217131	-	(Sh 1) No. 1 Unit - Safety Injection System No. 14 Accumulator Control Valves 14SJ54, 14SJ93, 14SJ58
5.6.24	217131	-	(Sh 2) No. 2 Unit - Safety Injection System No. 24 Accumulator Control Valves 24SJ54, 24SJ93, 24SJ58
5.6.25	218846	-	No. 1&2 Units - CC System Nos. 1CC187 & 2CC187 RCP CW Outlet Isolation Valves
5.6.26	218847	-	No. 1&2 Units - CC System Nos. 1CC190 & 2CC190 RCP Thermal Barrier Isolation Valves
5.6.27	218911	-	No. 1&2 Units - CC System Nos. 1CC131 & 2CC131 RCP Thermal Barrier CW Flow Control Valves
5.6.28	220900	-	No. 2 Unit - Service Water Intake 2C 230V Vital Bus Tie Valve 22SW17
5.6.29	220903	-	No. 2 Unit - Service Water Intake 2B 230V Vital Bus Isolation Valve No. 2SW26
5.6.30	220904	-	No. 2 Unit - Service Water Intake 2A 230V Vital Bus Isolation Valve No. 22SW20
5.6.31	220905	-	No. 2 Unit - Service Water Intake 2A 230V Vital Bus Tie Valve No. 21SW17
5.6.32	220977	-	No. 1 Unit - Penetration Area Service Water System Stop Valve No. 11SW22

5.6.33	220978	-	No. 1 Unit - Aux Building Service Water System Stop Valve No. 11SW21
5.6.34	220982	-	No. 1 Unit - Aux Building Service Water System Stop Valve No. 12SW21
5.6.35	220984	-	No. 2 Unit - Penetration Area Service Water System Stop Valve No. 21SW22
5.6.36	220985	-	No. 2 Unit - Aux Building Service Water System Stop Valve No. 21SW21
5.6.37	220989	-	No. 2 Unit - Aux Building Service Water System Stop Valve No. 22SW21
5.6.38	241107	-	(Sh 1) No. 1 Unit - Pressurizer - PZR Power Relief & Stop Valves & Overpressure Protection System Ch. 1
5.6.39	242882	-	(Sh 2) No. 1 Unit - Pressurizer - PZR Power Relief & Stop Valves & Overpressure Protection System Ch. 11
5.6.40	244083	-	(Sh 1) No. 2 Unit - Pressurizer - PZR Power Relief & Stop Valves & Overpressure Protection System Ch. 1
5.6.41	244085	-	No. 2 Unit - Pressurizer - PZR Power Relief & Stop Valves & Overpressure Protection System Ch. 11
5.6.42	250887	-	No. 1 Unit - CC System Nos. 1CC17, 11CC3 CCP CCW Inlet & Outlet & 1CC30 CCHX Outlet Cont. Valves

5.6.43	250889	-	No. 1 Unit - CC System Nos. 12CC3, 1CC18 CCP CCW Inlet & Outlet 1CC31, 12CCHX Outlet Cont. Valves
5.6.44	601683	-	No. 2 Unit - CC System Nos. 22CC3, 2CC18 CCP CCW Inlet & Outlet & 2CC31 CCHX Outlet Isolation Valves
5.6.45	601604	-	No. 2 Unit - CC System Nos. 2CC17, 21CC3, CCP CCW Inlet & Outlet & 2CC340 21CCHX Outlet Cont. Valves
5.6.46	211505	-	No. 1 & 2 Units RHR Sys. No. 11SJ44, 21SJ44, 11RH4, 21RH4, 1RH2, 2RH2 Suction Isolation Valves
5.6.47	211507	-	No. 1 & 2 Units RHR Sys. No. 12SJ44, 22SJ44, 12RH4, 22RH4, 1RH1, 2RH1 Suction Isolation Valves
5.6.48	211508	-	No. 1 & 2 Units RHR Sys. No. 1SJ69, 2SJ69 RWST to RHRP's Suct. Va. & No. 1RH20, 2RH20 RHX Bypass Cont. Va.
5.6.49	211510	-	No. 1 & 2 Units RHR Sys. No. 11SJ49, 21SJ49, 11RH19, 21RH19, 11RH18, 21RH18 Cooldown Control Valves
5.6.50	211512	-	No. 1 & 2 Units RHR Sys. No. 12SJ49, 22SJ49, 12RH18, 22RH18, 12RH19, 22RH19 Cooldown Control Valves
5.6.51	211529	-	No. 1 & 2 Units CC Sys. No. 11&21RHX CW Disch Isol. Valves No. 11CC16 & 21CC16

5.6.52	211530	-	No. 1 & 2 Units CC Sys No. 12&22 RHX CW Disch Isol Valves No. 12CC16 & 22CC16
5.6.53	218858	-	No. 1 & 2 Units CVCS No. 1CV175 & 2CV175 Rapid Borate Stop VAa.
5.6.54	203364	-	No. 1 & 2Units Feedwater 11,12,21& 22 Feedwater Stop Valves
5.6.55	203365	-	No. 1 & 2Units Feedwater 13,14,23 & 24 Feedwater Stop Valves
5.6.56	203886	-	No 1 Unit SWS 1C 230V Vital Bus Isolation Valve No. 11SW20
5.6.57	203887	-	No 1 Unit SWS 1A 230V Vital Bus Isolation Valve No. 13SW20
5.6.58	203896	-	No 1 Unit SWS 1A 230V Vital Bus Isolation Valve No. 14SW20
5.6.59	220901	-	No 2 Unit SWS 1C 230V Vital Bus Isolation Valve No. 24SW20
5.6.60	220902	-	No 2 Unit SWS 1C 230V Vital Bus Isolation Valve No. 23SW20
5.6.61	220904	-	No 2 Unit SWS 2A 230V Vital Bus Isolation Valve No. 22SW20
5.6.62	220906	-	No 2 Unit SWS 2A 230V Vital Bus Isolation Valve No. 21SW20

5.7 P&IDs

5.7.1	205201	-	No. 1 Unit Reactor Coolant
5.7.2	205202	-	No. 1 Unit Steam Generator Feed & Condensate
5.7.3	205228	-	No. 1 Unit Chemical & Volume Control Operation

5.7.4	205231	-	No. 1 Unit Component Cooling
5.7.5	205232	-	No. 1 Unit Residual Heat Removal
5.7.6	205234	-	No. 1 Unit Safety Injection
5.7.7	205242	-	No. 1 Unit Service Water Nuclear Area
5.7.8	205301	-	No. 2 Unit Reactor Coolant
5.7.9	205302	-	No. 2 Unit Steam Generator Feed & Condensate
5.7.10	205328	-	No. 2 Unit Chemical & Volume Control Operation
5.7.11	205331	-	No. 2 Unit Component Cooling
5.7.12	205332	-	No. 2 Unit Residual Heat Removal
5.7.13	205334	-	No. 2 Unit Safety Injection
5.7.14	205342	-	No. 2 Unit Service Water Nuclear Area

6.0 EFFECTS ON OTHER TECHNICAL DOCUMENTS

None

7.0 ATTACHMENTS

7.1 MOVs utilized in Control Room Evacuation Procedure and their Redundant Components/Systems

7.2 Figure 1 - Simplified Schematic of Valves not Susceptible to Postulated Hot Short

7.3 Figure 2 - Simplified Cable Block Diagram of Cable Routing

7.4 Figure 3 - Simplified Schematic of Valves Susceptible to Postulated Hot Short

7.5 Certification for Design Verification

8.0 **SIGNATURES**

T.J. O'Loughlin 8/20/93
Originator Date

W.M. McDevitt 8/20/93
Peer Reviewer Date

8-20-93
Operations Department Date
J.E. SERWAN

8/20/93
E.R. DeWeese Date
Verifier

P.E. Steinhauer 8/23/93
Engineering Assessment Group Date
Supervisor

8/23/93
J.V. Bailey Date
Nuclear Engineering Sciences
Manager

ATTACHMENT 1

MOVs Utilized in Control Room Evacuation Procedure and their Redundant Component/Systems

UNIT 1

Valve	Redundant Component/System	Safe Shutdown System
11BF13	Feedwater pump trip	Main Feedwater Isolation
12BF13	Feedwater pump trip	Main Feedwater Isolation
13BF13	Feedwater pump trip	Main Feedwater Isolation
14BF13	Feedwater pump trip	Main Feedwater Isolation
1CC17	1CC18	Component Cooling
1CC18	1CC17	Component Cooling
1CC30	1CC31	Component Cooling
1CC31	1CC30	Component Cooling
1CC117*	RCP Seal Cooling	Component Cooling
1CC118*	RCP Seal Cooling	Component Cooling
1CC131*	RCP Seal Cooling	Component Cooling
1CC136*	RCP Seal Cooling	Component Cooling
1CC187*	RCP Seal Cooling	Component Cooling
1CC190*	RCP Seal Cooling	Component Cooling
11CC3	12CC3	Component Cooling
11CC6	See Note 1	Component Cooling
12CC3	11CC3	Component Cooling
12CC16	See Note 1	Component Cooling
1CV40*	1CV41	Charging
1CV41*	1CV40	Charging
1CV68*	1CV69 or Use of the Safety Injection line	Charging
1CV69*	1CV68 or Use of the Safety Injection line	Charging
1CV116*	Component Cooling	Charging

Valve	Redundant Component/System	Safe Shutdown System
1CV139	Charging Pump 13	Charging
1CV140	Charging Pump 13	Charging
1CV175	See Note 1	Charging
1CV284*	Component Cooling	Charging
1PR6	1PR1	Reactor Depressurization
1PR7	1PR2	Reactor Depressurization
1RH1	See Note 1	Residual Heat Removal
1RH2	See Note 1	Residual Heat Removal
11RH4	See Note 1	Residual Heat Removal
11RH19	See Note 1	Residual Heat Removal
11RH29	12RH29	Residual Heat Removal
12RH4	See Note 1	Residual Heat Removal
12RH19	See Note 1	Residual Heat Removal
12RH29	11RH29	Residual Heat Removal
1SJ1*	1SJ2	Charging
1SJ2*	1SJ1	Charging
1SJ4*	1SJ5(when open)/1SJ12 & 1SJ13(when closed)	Charging
1SJ5*	1SJ4(when open)/1SJ12 & 1SJ13(when closed)	Charging
1SJ12*	1SJ13	Charging
1SJ13*	1SJ12	Charging
1SJ69	See Note 1	Charging
11SJ44	See Note 1	Charging
11SJ49	See Note 1	Charging
11SJ54*	Accumulators 1SJE7,1SJE8 & 1SJE9	See Note 2
12SJ44	See Note 1	Charging
12SJ49	See Note 1	Charging

Valve	Redundant Component/System	Safe Shutdown System
12SJ54*	Accumulators 1SJE6,1SJE8 & 1SJE9	See Note 2
13SJ54*	Accumulators 1SJE6,1SJE7 & 1SJE9	See Note 2
14SJ54*	Accumulators 1SJE6,1SJE7 & 1SJE8	See Note 2
1SW26	11SW20 & 13SW20	Service Water
11SW17	Use Header 12 only	Service Water
11SW20	1SW26	Service Water
11SW21	12SW21	Service Water
11SW22	12SW22,11SW23 & 12SW23	Service Water
11SW23	12SW23	Service Water
12SW17	Use Header 11 only	Service Water
12SW20	14SW20	Service Water
12SW21	11SW21	Service Water
12SW22	11SW22	Service Water
12SW23	11SW23	Service Water
13SW20	1SW26	Service Water
14SW20	12SW20	Service Water

* . Control circuits which have cables running from the MCC to Solid State Protection or Recorder Panels. These cables are routed through Relay Room trays.

Notes:

1) Valve is not considered susceptible to IN 92-18 Hot Short. Therefore valve was not evaluated for redundant component/system.

2) Accumlators are not defined as a safe shutdown system, since they do not provide for a safe shutdown flow path.

UNIT 2

Valve	Redundant Component/System	Safe Shutdown System
21BF13	Feedwater pump trip	Main Feedwater Isolation
22BF13	Feedwater pump trip	Main Feedwater Isolation
23BF13	Feedwater pump trip	Main Feedwater Isolation
24BF13	Feedwater pump trip	Main Feedwater Isolation
2CC17	2CC18	Component Cooling
2CC18	2CC17	Component Cooling
2CC30	2CC31	Component Cooling
2CC31	2CC30	Component Cooling
2CC117*	RCP Seal Cooling	Component Cooling
2CC118*	RCP Seal Cooling	Component Cooling
2CC131*	RCP Seal Cooling	Component Cooling
2CC136*	RCP Seal Cooling	Component Cooling
2CC187*	RCP Seal Cooling	Component Cooling
2CC190*	RCP Seal Cooling	Component Cooling
21CC3	22CC3	Component Cooling
21CC6	See Note 1	Component Cooling
22CC3	21CC3	Component Cooling
22CC16	See Note 1	Component Cooling
2CV40*	2CV41	Charging
2CV41*	2CV40	Charging
2CV68*	2CV69 or Use of the Safety Injection line	Charging
2CV69*	2CV68 or Use of the Safety Injection line	Charging
2CV116*	Component Cooling	Charging
2CV139	Charging Pump 13	Charging
2CV140	Charging Pump 13	Charging

Valve	Redundant Component/System	Safe Shutdown System
2CV175	See Note 1	Charging
2CV284*	Component Cooling	Charging
2PR6	2PR1	Reactor Depressurization
2PR7	2PR2	Reactor Depressurization
2RH1	See Note 1	Residual Heat Removal
2RH2	See Note 1	Residual Heat Removal
21RH4	See Note 1	Residual Heat Removal
21RH19	See Note 1	Residual Heat Removal
21RH29	22RH29	Residual Heat Removal
22RH4	See Note 1	Residual Heat Removal
22RH19	See Note 1	Residual Heat Removal
22RH29	21RH29	Residual Heat Removal
2SJ1*	2SJ2	Charging
2SJ2*	2SJ1	Charging
2SJ4*	2SJ5(when open)/2SJ12 & 2SJ13(when closed)	Charging
2SJ5*	2SJ4(when open)/2SJ12 & 2SJ13(when closed)	Charging
2SJ12*	2SJ13	Charging
2SJ13*	2SJ12	Charging
2SJ69	See Note 1	Charging
21SJ44	See Note 1	Charging
21SJ49	See Note 1	Charging
21SJ54*	Accumulators 2SJE7,2SJE8 & 2SJE9	See Note 2
22SJ44	See Note 1	Charging
22SJ49	See Note 1	Charging
22SJ54*	Accumulators 2SJE6,2SJE8 & 2SJE9	See Note 2

Valve	Redundant Component/System	Safe Shutdown System
23SJ54*	Accumulators 2SJE6,2SJE7 & 2SJE9	See Note 2
24SJ54*	Accumulators 2SJE6,2SJE7 & 2SJE8	See Note 2
2SW26	21SW20 & 23SW20	Service Water
21SW17	Use Header 22 only	Service Water
21SW20	2SW26	Service Water
21SW21	22SW21	Service Water
21SW22	22SW22,21SW23 & 22SW23	Service Water
21SW23	22SW23	Service Water
22SW17	Use Header 21 only	Service Water
22SW20	24SW20	Service Water
22SW21	21SW21	Service Water
22SW22	21SW22	Service Water
22SW23	21SW23	Service Water
23SW20	2SW26	Service Water
24SW20	22SW20	Service Water

* Control circuits which have cables running from the MCC to Solid State Protection or Recorder Panels. These cables are routed through Relay Room trays.

Notes:

1) Valve is not considered susceptible to IN 92-18 Hot Short. Therefore valve was not evaluated for redundant component/system.

2) Accumlators are not defined as a safe shutdown system, since they do not provide for a safe shutdown flow path.

SIMPLIFIED SCHEMATIC OF VALVES NOT SUSCEPTIBLE TO POSTULATED HOT SHORT

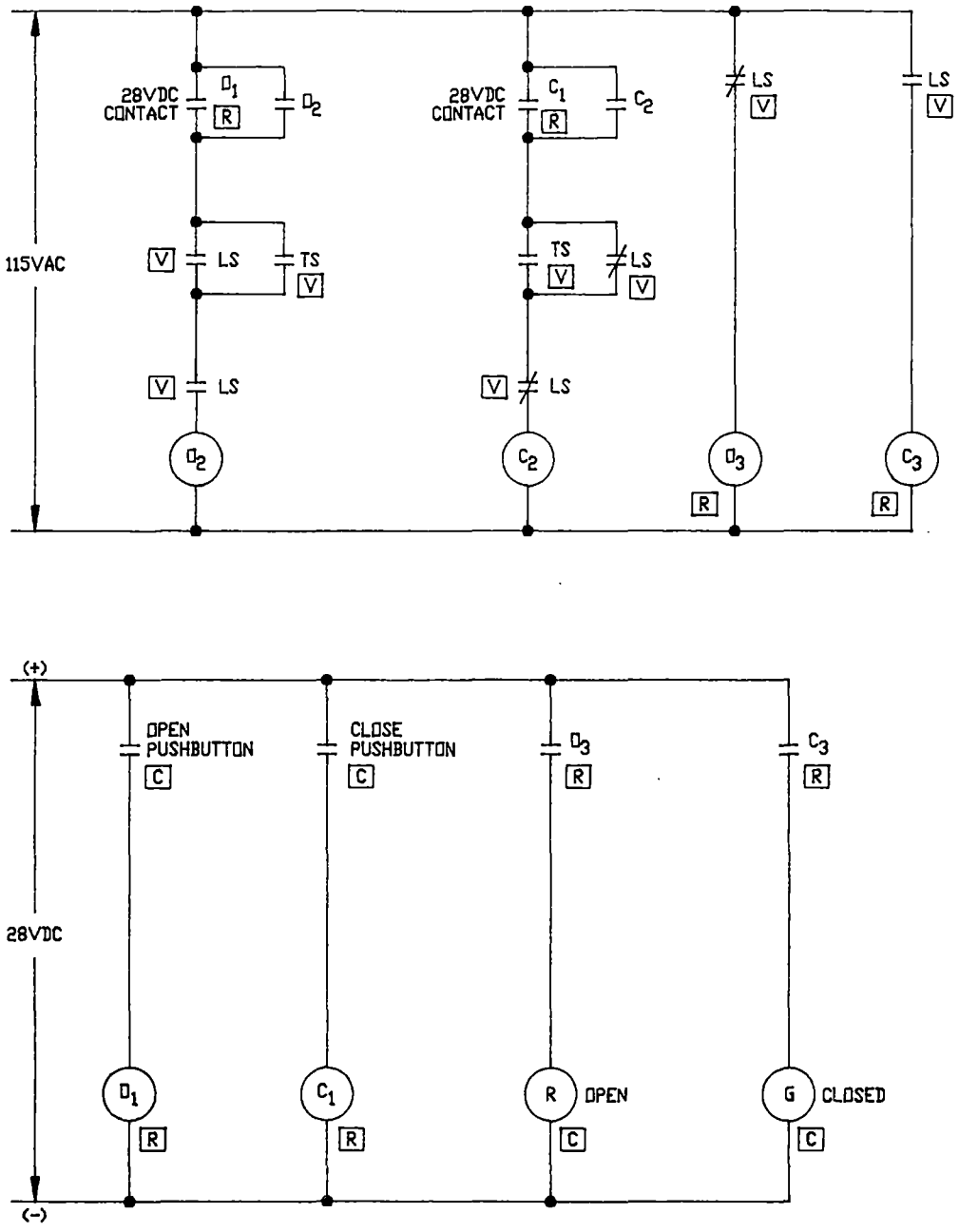

TS - TORQUE SWITCH
LS - LIMIT SWITCH

ALL EQUIPMENT AT MCC UNLESS OTHERWISE NOTED

[V] ON VALVE

[R] LOCATED IN RELAY ROOM

[C] LOCATED IN CONTROL ROOM

VALVE SHOWN OPEN

FIGURE 1

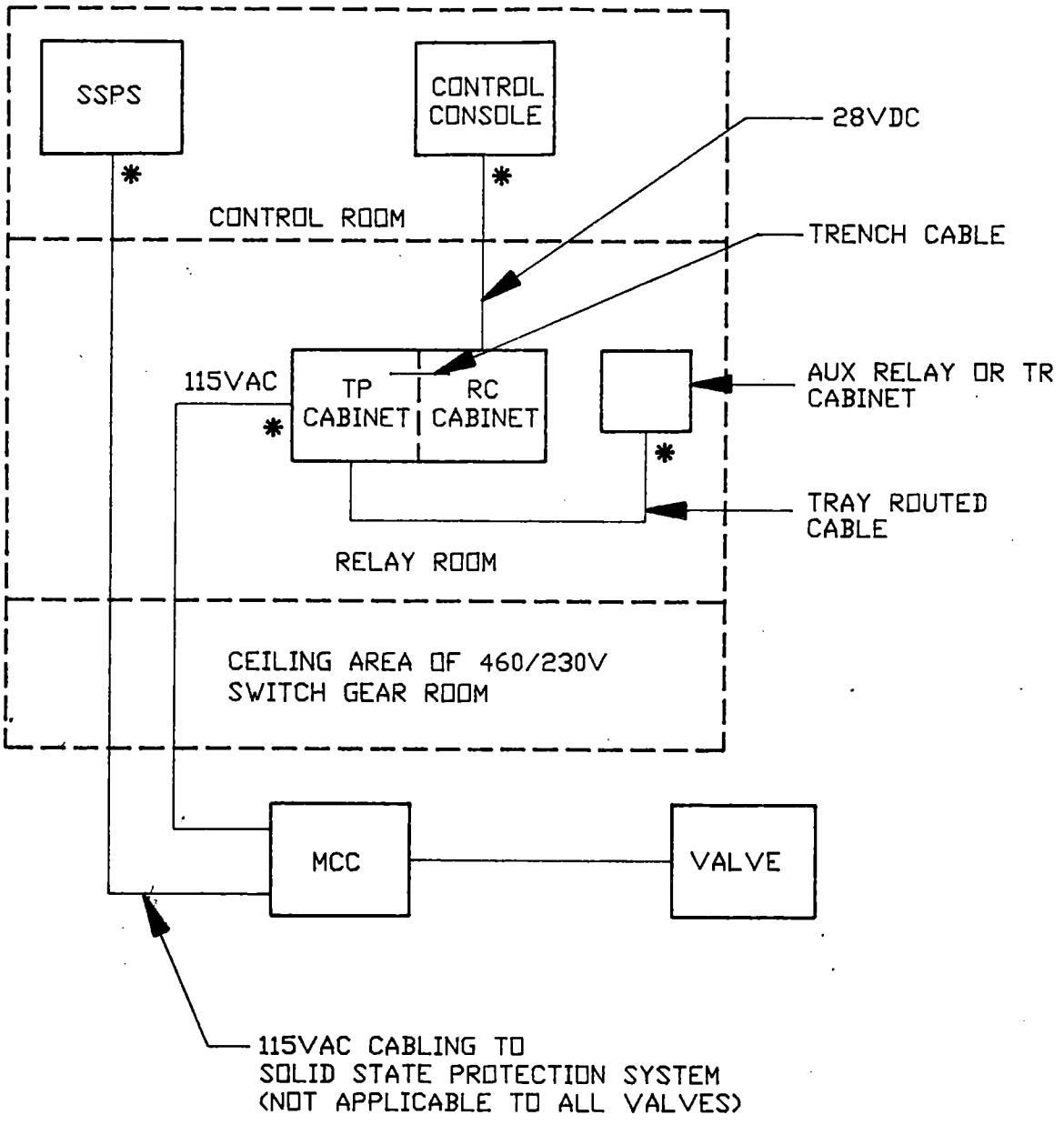

FIGURE 2

* BOTTOM ENTRY CABLES

SIMPLIFIED SCHEMATIC OF VALVES SUSCEPTIBLE TO POSTULATED HOT SHORT

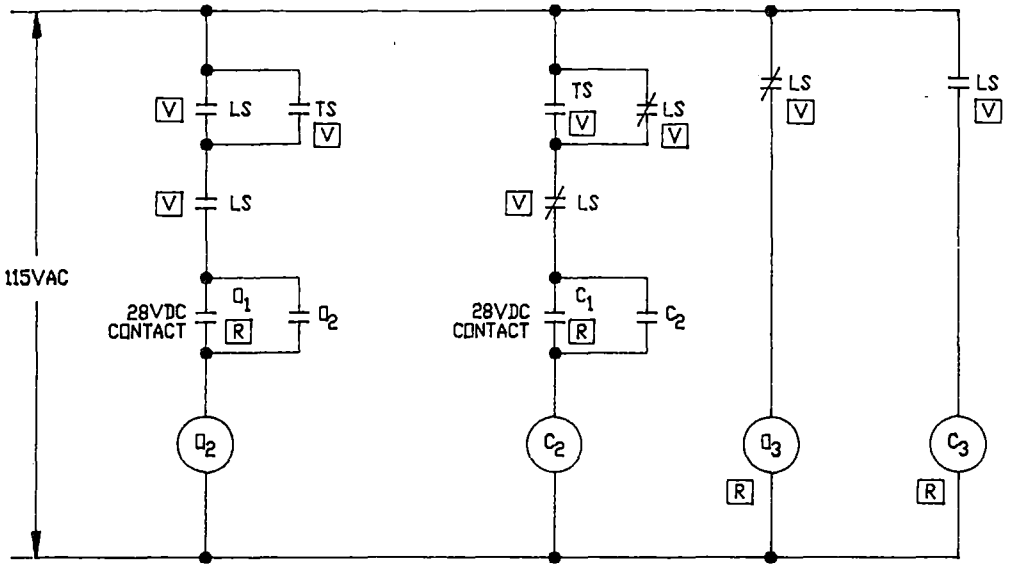

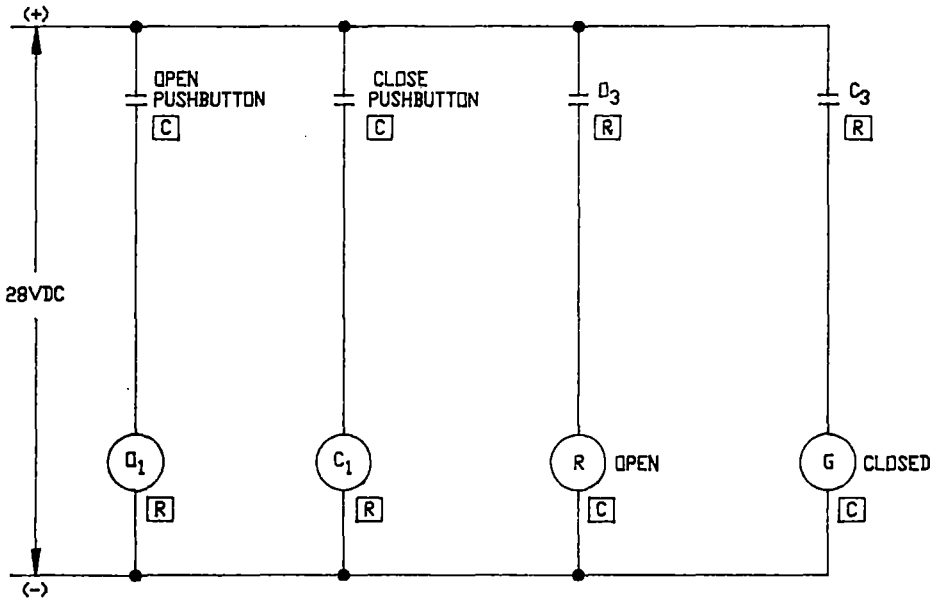

TS - TORQUE SWITCH
LS - LIMIT SWITCH

ALL EQUIPMENT AT MCC UNLESS OTHERWISE NOTED

[V] ON VALVE

[R] LOCATED IN RELAY ROOM

[C] LOCATED IN CONTROL ROOM

VALVE SHOWN OPEN

FIGURE 3

FORM NC.DE-AP.ZZ-0010-1

CERTIFICATION FOR DESIGN VERIFICATION

Reference No. S-C-ZZ-NEE-0838/R0

SUMMARY STATEMENT

The design inputs and outputs are considered consistent. The referenced schematics, procedures and pertinent sections of analysis have been reviewed. The evaluation conclusions are consistent with the purpose and approach of the EE. The recommendations are reasonable relative to the evaluation discussion and references.

The undersigned hereby certifies that the design verification for the subject document has been completed, the questions from the generic checklist have been reviewed and addressed as appropriate, and all comments have been adequately incorporated.

Design Verifier Assigned By	Signature of Design Verifier / Date
R.J. ATKISSON (BY TELECON DIRECTION 8/20/93)	8-20-93

Page ___ of ___