Public Service
Electric and Gas
Company

Steven E. Miltenberger

Vice President and Chief Nuclear Officer

Public Service Electric and Gas Company P.O. Box 236, Hancocks Bridge, NJ 08038 609-339-4199

August 1, 1989

NLR-N89141

United States Nuclear Regulatory Commission
Document Control Desk
Washington, DC 20555

Gentlemen:

REQUEST FOR ADDITIONAL INFORMATION
NUREG 0737 ITEM II.D.1
SALEM GENERATING STATION
UNIT NOS. 1 AND 2
DOCKET NOS. 50-272 AND 50-311

The purpose of this letter is to provide responses to questions 1 through 10 and 13 of the NRC request for additional information letter dated January 4, 1989 regarding NUREG 0737, Item II.D.1. Note that questions 6 and 7 were subsequently withdrawn by the NRC during a telecon on February 22, 1989. This submittal completes the responses to questions 1 through 9 as committed in PSE&G letter NLR-N89048 dated March 31, 1989. A preliminary response is provided for questions 10 and 13. The final responses will be provided by October 31, 1989. Questions 11 and 12 and 14 through 16 were responded to in our letter dated July 7, 1989 (NLR-N89109).

Should you have any further questions, please feel free to contact us.

Sincerely,

S E Miltenberger

Attachment

A046
1/1

C Mr. J. C. Stone
Licensing Project Manager

Ms. K. Halvey Gibson
Senior Resident Inspector

Mr. W. T. Russell, Administrator
Region I

Mr. Kent Tosch, Chief
New Jersey Department of Environmental Protection
Division of Environmental Quality
Bureau of Nuclear Engineering
CN 415
Trenton, NJ 08625

NRC QUESTIONS AND RESPONSES

Q1. PORV Loop Seal

Reference 4 indicated that the inlet piping to the Salem PORVs were in the loop seal configuration (see table on page 5), but made no reference of the loop seal in its discussion of PORV operability. In addition, the Salem Stress Reports (Reference 2) stated that the PORV inlet piping did not include a loop seal. It is, therefore, not clear whether there is loop seal in the PORV inlet piping or not. Verify whether Salem PORV inlet piping include loop seal and whether a cold or insulated loop seal is used. If a loop seal is, indeed, included in the PORV inlet piping, provide a discussion on the PORV operability in the presence of a loop seal.

Response

Review of the piping arrangement drawings for the Salem PORVs confirms that the piping configuration, although not a classical "U" shaped loop seal, would permit condensate to collect for several feet upstream (inlet side) of the valves. This piping, from the pressurizer nozzle to the PORVs, is insulated; insulation varies from 3-inches of reflective type insulation near the pressurizer, to 1.5-inches of encapsulated type insulation adjacent to the valves.

Regarding valve operability in the presence of a loop seal, reference is made to section 4.6.2 of EPRI Report NP-2628-SR, EPRI PWR Safety and Relief Valve Test Program, which has already been docketed. It is concluded in this report that Copes Vulcan valves, as installed at Salem, opened and closed upon demand and sustained no damage that would affect future valve performance for a variety of valve inlet steam and water conditions, including a simulation of inlet water seal.

Q2. Safety Valve Inlet Pressure Drop

The Licensee gave the pressure drop values through the inlet piping as 18.6 psi for the plant specific safety valve and 19.2 psi for the applicable EPRI test valve (see Question 4, Reference 2). These values appear to be extremely low, compared with pressure drops listed in Table B-3 of Reference 3 for various EPRI valve inlet configurations. Verify the pressure drop values given above. Present a recalculation of the total pressure drops through the inlet piping of Salem Units 1 and 2 safety valves and the applicable EPRI inlet piping arrangement. The total pressure drop should include both the frictional and acoustic wave components evaluated under steam conditions.

Response

The pressure drop of 18.6 psi provided in our August 19, 1985 submittal consisted of frictional component only.

Attachment 1 is a revised calculation (S-C-R200-MDC-091, Rev. 1) of the pressure drop through the safety valve inlet piping. The total pressure drop calculated includes both frictional and acoustic wave components.

The method and formulas used to calculate the pressure drop are based on MPR Associates, Inc. interim report - Rev. 2 "EPRI PWR Safety Valve and Relief Valve Test Program Guide for Application of Valve Test Program Results to plant Specific Evaluations." Appendix B to that report provides the procedure for calculation of inlet piping pressure effects.

The Salem plant specific pressure drop is less than the EPRI test configuration pressure drops provided in Table B-3 of the MPR Associates report. Hence, Salem safety valves would be expected to have performance at least as stable as the tested valve.

Q3. Backpressure

The submittal did not include a comparison of the maximum backpressure developed in the discharge piping of the Salem safety valve with the EPRI tests. Since the EPRI tests show that safety valve performance is sensitive to backpressure, backpressure should be considered in the safety valve evaluation. Provide the numerical value of the calculated maximum backpressure for the Salem safety valve and explain how the backpressure was calculated.

Response

Backpressure developed in the discharge piping of the Salem safety valves was calculated using Continuum Dynamics Inc.'s quasi-steady backpressure computer program. The program calculated backpressure for all relief and safety valves open, thus predicting the higher and more conservative backpressures (616 to 688 psia). (Note that the backpressure calculated for one of the Salem Unit 1 safety valves was 478 psia for only one safety valve open as identified in Reference 2 of the Continuum Dynamics Report). The Continuum Dynamics Tech. Note 82-29 documenting the results was forwarded to the NRC along with our August 19, 1985 submittal.

The highest backpressure was predicted for valve 1PR4 which has the longest (actual plus equivalent) length of piping of all the pressurizer safety valves at Salem Unit 1 and 2. Thus it is concluded that the Salem 1 backpressure calculation bounds both Salem Unit 1 and 2 backpressure calculation.

The discharge piping comparison for the Salem units is summarized and attached as Table 1.

Q4. Cold Overpressure Transient

In the discussion of the PORV inlet fluid condition for cold overpressure transients, the Licensee indicated that the maximum pressure is 446 psig for the mass input case and 424 psig for the heat input case but did not give the temperature range under which the valve is expected to operate (Question 1, Reference 2). Identify the maximum and minimum temperature predicted for cold overpressure transient so as to complete the cold overpressure discussion.

Response

The maximum and minimum temperatures predicted for the cold overpressure transients are 312°F and 80°F.

Q5. PORV Control Circuitry

The Licensee submitted the Functional Specification: CD-S-10 for the Pressurizer Overpressure Protection System for the Salem plant to demonstrate the qualification of the PORV control circuitry (Question 8, Reference 2). This information, by itself, is not sufficient to demonstrate qualification of the control circuitry at Salem under NUREG-0737. The Nuclear Regulatory Commission staff has agreed that meeting the licensing requirements of 10CFR50.49 for this circuitry is satisfactory and that specific testing per NUREG-0737 requirement is not required. Therefore, verify whether the PORV control circuitry has been reviewed and accepted under the requirements of 10CFR50.49.

If the PORV circuitry has not been qualified to the requirements of 10CFR50.49, provide information to demonstrate that the control circuitry is qualified per the guidance provided in Reg. Guide 1.89, Revision 1, Appendix E.

As an alternative, the staff has determined that the requirements of NUREG-0737 regarding the qualification of the PORV control circuitry may be satisfied if one or more of the following conditions is met.

a. The PORVs are not required to perform a safety function to mitigate the effects of any design basis event in the harsh environment, and failure in the harsh environment will not adversely impact safety functions or mislead the operator (PORVs will not experience any spurious actuations and, if emergency operating procedures do not specifically prohibit use of PORVs in

accident mitigation, it must be ascertained that PORVs can be closed under harsh environment conditions).

b. The PORVs are required to perform a safety function to mitigate the effects of a specific event, but are not subjected to a harsh environment as a result of that event.

c. The PORVs perform their function before being exposed to the harsh environment, and the adequacy of the time margin provided is justified; subsequent failure of the PORVs as a result of the harsh environment will not degrade other safety functions or mislead the operator (PORVs will not experience any spurious actuations, and if emergency operating procedures do not specifically prohibit use of PORVs in accident mitigation, it must be ascertained that PORVs can be closed under harsh environment conditions).

d. The safety function can be accomplished by some other designated equipment that has been adequately qualified and satisfies the single-failure criterion.

Response

PSE&G elects to show PORV control circuitry compliance to NUREG-0737, Item II.D.1 by satisfying alternative criteria "b" as specified in the NRC letter.

Salem PORVs are assumed to operate or not operate so as to give worst case results for the loss of load accident, loss of feedwater accident and rod withdrawal accident at power. However, PORVs are not required to perform a safety function to mitigate the effects of the above events.

The only event (although not a design basis) during which PORVs may be relied upon to perform a mitigating function is a steam generator tube rupture (SGTR). During a SGTR event, pressurizer spray is used to control RCS pressure. With Reactor Coolant Pumps stopped and normal pressurizer spray unavailable, PORVs or auxiliary pressurizer spray is used to control RCS pressure.

The use of PORVs to reduce RCS pressure to no load secondary side steam generator saturation pressure does not normally lead to a pressurizer relief tank (PRT) rupture disc rupture as known from a previous simulator run. As such, the containment is not subjected to a harsh environment as a result of a SGTR event. However, in a case that the PRT rupture disc ruptures with the actuation of a PORV, the containment conditions are judged not to be harsh enough to preclude subsequent PORV actuations, if required.

In view of the above, it is concluded that the PORVs, when required to mitigate the effects of a SGTR event, are not subjected to a harsh environment as a result of that event.

Q6. Valve Discharge Condition

This question withdrawn by NRC staff during February 22, 1989 telecon.

Q7. Pressurization Rate

This question withdrawn by NRC staff during February 22, 1989 telecon.

Q8. PORV Loop Seal

Referring to Question 1 above the Impell thermal hydraulic and stress analysis of the piping system assumed that there was no water seal upstream of the Salem PORVs. If it is determined that the PORV inlet pipe does include a water seal, identify the water seal temperature and amend the Impell analysis to include the effects of the water seal on the piping stresses.

Response

A full review of PORV piping files has revealed that final calculations did not include consideration of a valve inlet loop seal. Initial data retrieval efforts gave the erroneous impression that a loop seal was included, however this was only for some very early trial calculation cases.

The PORV loop seal was not included in the final analysis as it was felt that it would be an inordinate conservatism in light of the following conservatisms already included or mitigating circumstances present:

a. Conservative assumption of 5 valves discharging simultaneously, as opposed to separate PORV and Safety Valve actuations.

b. Conservative assumption of 150 millisecond relief valve opening time, rather than the EPRI test verified opening time of 500 to 970 milliseconds.

c. Use of the higher maximum EPRI valve test flow rates in the analysis, rather than the lower manufacturer's "rated" flow rates.

d. Existence of insulation on the PORV loop seal piping, thus warming the water and tending to lower forces generated.

e. Identification that the volume of water in the two PORV loopseals is a total of approximately 0.7 cubic feet, or only 15% of the estimated combined loopseal volumes of the three safety valves and the two PORVs.

f. Use of level B (Upset condition) and level C (Emergency condition) allowable stresses for the PORV and Safety Valve discharge piping respectively, rather than the less conservative, yet permissible, levels C and D (Faulted condition), respectively.

g. Conservative assumption of PORV opening pressure of 2500 psi, rather than the actual opening pressure of 2235 psi, (which would generate lower piping loads).

Given the above, it is our position that the existing analysis without PORV loop seals is acceptable and that no further analysis in this area is required.

Q9. Safety Valve Loop Seal Temperature

In the discussion of the thermal hydraulic analysis in Reference 2, the Licensee did not provide information on the loop seal temperature distribution used. Since the fluid forces acting on the piping system can be significantly affected by the loop seal temperature assumed in the analysis, show the loop seal temperature profile used in the thermal hydraulic analysis and provide a field verification by comparing the assumed temperature with the actual temperature measured at the plant.

<u>Response</u>

The loop seal temperature distribution used in the stress analysis for the longest inlet loop seal of all Salem Units 1 & 2 valves are provided in Attachment 2. Node numbers are identified in Sketch 1. Also attached is Sketch 2 showing the loop seal arrangement and Sketch 3 showing the projected loop seal temperature profile developed by Diamond Power, Inc., the designer of the loop seal insulation.

To field verify the temperatures obtained, each of the Salem Unit 2 loop seals was installed with a clamp on style Conax thermocouple in the vertical run from the pressurizer. A similar thermocouple was installed on each safety valve inlet flange.

Salem Unit 1 insulation boxes were installed subsequent to the Salem Unit 2 insulation box installation. Thermocouples on the Salem Unit 1 loop seals were installed similar to the Salem 2 configuration with one exception. The thermocouple on the 1PR3 loop seal was moved from the vertical run to the horizontal run on the steam space close to the pressurizer nozzle. The purpose of this relocated thermocouple was to calibrate the thermocouple readings against the known steam condition in the steam space at the highest elevation.

The field verifications performed using these thermocouples were evaluated and it was concluded that Salem Units 1 and 2 pressurizer loop seal insulation boxes produced the projected temperature profile, thereby validating the Impell analysis.

Q10. Thermal Hydraulic Analysis Inputs

In the description of the thermal hydraulic analysis of the safety valve and PORV discharge conditions, the Impell stress report only defined the valve opening pressure and pressurization rate used in the analysis (Reference 2). It did not give details on the important input parameters used in the analysis. Provide information on the peak pressure developed at the safety valve and PORV inlets and other key parameters used in the computer calculations such as piping model node spacing, computation time interval, choked flow locations, etc. so that the review of the thermal hydraulic analysis can be completed.

<u>Response</u>

The thermal hydraulic analyses which provided inputs to the piping stress analyses for the Salem Unit 1 plant were performed by Impell Corporation, while those for Salem Unit 2 were performed by PSE&G and transmitted to Impell for use in the piping stress analyses.

For the Unit 1 analysis, peak pressures at the Safety Valves and PORV inlets are provided in the following table:

FIRST VOLUME UPSTREAM OF VALVE ORIFICE	VALVE	PEAK INLET PRESSURE (psia)	@ (sec.)
312	SV PR3	2662	7.5×10^{-2}
1812	SV PR4	2656	7.5×10^{-2}
2712	SV PR5	2655	7.5×10^{-2}
4404	RV PR2	2395	5.0×10^{-2}
5204	RV PR1	2397	5.0×10^{-2}

The above peak pressures are obtained from the RELAP5/MOD1 run of record #RELAPPO for the Safety valve hot loop seal (insulation box) discharge analysis.

Unit 1 piping model node spacing was selected in accordance with the ITI recommendations (Reference 8). The size of the control volumes (nodes) was kept close to one foot, and significant differences in length between adjacent control volumes (nodes) were avoided.

Concerning the computation time interval utilized in the Unit 1 thermal hydraulic transient analysis, the maximum time step was limited to 2.0×10^{-4} seconds. The minimum time step actually used by RELAP was 1.9531×10^{-7} seconds for the first 50 milliseconds and reached 2.0×10^{-4} seconds thereafter for the duration of the transient.

Concerning choked flow locations for the Unit 1 analysis, the RELAP5/MOD1 choking option was only used at the safety and relief valve locations. The RELAP run of record RELAPPO results indicate that at those locations, choking was present throughout the transient and that the choking model was applied for a total of 4,353 time steps. Based upon the ITI recommendations and results of the choking sensitivity studies (Reference 8, Section C.3), the choking option was not used elsewhere in the thermal-hydraulic analysis.

As previously mentioned, the Unit 2 thermal-hydraulic analysis was performed by PSE&G and transmitted to Impell for use in the piping stress analysis. Specifically, the analysis was performed by a PSE&G employee, who was then the Technical Chairman of the EPRI Safety and Relief Valve Test Program addressing these issues and who is experienced in this type of analysis. The original input data for the Unit 2 analysis were stored on electronic media (magnetic tape). During the relocation of our Nuclear Department to the Salem site, these tapes were lost, and as such, the data is not retrievable. It is felt however, that the calculated values for node spacing and time step utilized in the Unit 2 analysis were consistent with calculated values of sonic velocity, and that the solutions obtained were reasonable and consistent with accepted practice. Similarly, there is every confidence that the application of the choke flow option was prudently performed.

As an added assurance as to the accuracy of the Unit 2 analysis, a comparison will be made between the physical configuration/modeling of Unit 1 and Unit 2. It is felt that similarity of configuration, modeling, thermal hydraulic inputs, and codes will provide such assurance. The results of this comparison will be provided by October 31, 1989.

Q13. Portion of Discharge Piping Not Analyzed

The stresses in the piping downstream from the pipe anchor at elevation 131 ft.-4 in. to the pressurizer relief tank were not addressed in the Impell stress reports. The Licensee contended that this portion of the piping was isolated from the Reactor Coolant Pressure Boundary (RCPB) by the pipe anchor, and the piping was dispensable and could be excluded from the analysis. Although the piping downstream of the anchor at elevation 131 ft-4 in. is outside the RCPB, the failure of this piping may still affect valve operability. For instance, if the failure of the downstream pipes results in excessive pipe deformation, the discharge flow may be restricted to such an extent that the valve can no longer function properly. If an abrupt rupture of the pipe occurs, the pipe whip may cause severe damage to the upstream piping and even the valve itself. Therefore, the piping from the anchor at elevation 131 ft-4 in. to the discharge tank cannot be ignored. Provide an analysis of the piping and supports downstream of the anchor to ensure that the integrity of the piping within the RCPB and the operability of the valves will not be adversely affected by in the downstream piping.

Response

In lieu of performing a complete reanalysis of the downstream piping and supports to ensure no loss of function of the Safety Valves and PORVs and no deleterious effect upon adjacent accident mitigating equipment, it is intended to perform a bounding analysis of sufficient rigor to provide reasonable assurance of the above.

Even though the Stress Reports did not address specifically stress analysis for the piping between elevation 131 ft-4in. and the pressurizer relief tank, a stress analysis of the line was performed to derive the loads for the anchor separating the segments of pipe (Reference 1).

The review of the pipe stress runs for the above mentioned piping has produced the following results:

Piping Stress

The original stress run, as it did not intend to qualify the line, but only to develop anchor loads, did not provide for a code check of the load, but it did provide individual load cases for all the analyzed conditions. Therefore, our review included the summing up (by hand) of the stresses for individual load cases (Ref. 2) for the highest stressed node points. The load cases included deadweight, thermal,

seismic, and RVA (Rapid Valve Actuation). The RVA has two load cases which involve water and steam respectively. By reviewing the results of the steam and water load cases (4e and 4d), it is found that the RVAS (steam) loads are almost double RVAW (water) loads. Thus only RVAS loads were used in the evaluation.

The stress check of the highest loaded nodes in the piping between the anchor and the discharge tank (as shown in Table 2) demonstrates that all the stresses are within the required allowables. Therefore, the piping will maintain its structural integrity during any normal, seismic, or faulted condition considered.

Supports

The review of the stress runs (Ref. 2) shows that the maximum support load is at Node 993 (Z-snubber) of 40,785 lbs. The support loads in the upstream piping (above elevation 131 ft-4in. anchor) were reviewed and were found to be much higher.

A more extensive sampling review of support stresses for the downstream piping is in progress; current judgement is that the piping supports can be shown to provide adequate restraint to ensure continued function of the Safety and PORV valves under postulated loading conditions with no unacceptable deleterious effect upon adjacent accident mitigating equipment. We will provide the results of this investigation when it is complete (October 31, 1989).

ATTACHMENT 1
QUESTION2

PSEG Nuclear Department CALCULATION COVER SHEET	TITLE PZR SAFETY VALVE INLET PIPING PRESSURE DROP		COVER SHEET
	ID NUMBER S-C-R200-MDC-91-1	REFERENCE NUREG 737, II.D.1 NRC LETTER 1-4-89	1 OF 1
CALCULATION REVISION	1 [Supersedes 0] S-C-R200-MDC-91		
CP NUMBER	N/A		
REVISION HISTORY (INTERIM or FINAL) INTERIM = Proposed Plant Change FINAL = Supports Installed Condition	FINAL		
FUTURE CONFIRMATION REQUIRED:	NO		
ORIGINATOR (Initial & Date)	[illegible] 6/1/89 (M. DANAK)		
REVIEWER (Initial & Date)	DKwl 7/6/89		
Public Service SUPERVISOR APPROVAL (Initial & Date)	[illegible] 7/7/89		
COVER SHEET (Number Pages)	1		
CALCULATIONS (Number Pages) (Excluding Attachments)	6		
ATTACHMENTS (Number/Total Pages)	1		
TOTAL PAGES	7		

IMPORTANT TO SAFETY ☒ YES ☐ NO

If yes, design verification required per DE-AP.ZZ-0010(Q) (Design Verification, Ref. 8.3)

DE-AP.ZZ-0002(Q) DE-AP.ZZ-0002(Q) Exhibit 1 Rev. 0

PSEG CALCULATION CONTINUATION SHEET	TITLE PZR SAFETY VALVE INLET PIPING PRESSUR DROP	ID NO. S-C-R200-MDC-91-1	SHEET 1 OF 7
		REFERENCE NUREG 737, II-D-1. NRC LETTER 1-4-89	
	ORIGINATOR	[illegible]	
	DATE	6-1-89	
	PEER REVIEWER	DW	
	DATE	7/6/89	

PURPOSE:

The purpose of this calculation is to calculate the pressure drop thru safety valve, inlet piping. The total pressure drop should include both the frictional and acoustic wave components evaluated under steam conditions.

METHOD:

The method and formules to calculate the pressure drop is based on MPR Associates Inc interm report - Rev. 2 "EPRI PWR SAFETY VALVE AND RELIEF VALVE TEST PROGRAM GUIDE FOR APPLICATION OF VALVE TEST PROGRAM RESULTS TO PLANT SPECIFIC EVALUATIONS". APPENDIX B TO THAT REPORT PROVIDES PROCEDURE FOR CALCULATION OF INLET PIPING PRESSURE EFFECTS.

REFERENCES:

(1) Requests for additional information NUREG 737, II.D 1., Preformance testing of Relief & Safety Valves - NRC letter dated January 4 1989.

(2) MPR Associates Interim Report Rev. 2 dated July 82 - Guide for application of valve test program - EPRI - Results to plant specific evaluation.

(3) Flow of fluides thru valves, fittings and pipe, Crane Co. Technical Paper No. 410 1969 & 1982

PSEG CALCULATION CONTINUATION SHEET	TITLE PZR SAFETY VALVE INLET PIPING PRESSURE DROP	ID NO. S-C-R200-MDC-91-1			SHEET 2 OF 7
		REFERENCE NUREG 737, II.D-1. NRC LETTER 1-4-89			
	ORIGINATOR DATE	bm 6/1/89			
	PEER REVIEWER DATE	ph 7/6/89			

SALEM PIPING & VALVES:

Safety Valve No.	LOOP SEAL LENGTH	LOWER RING	UPPER ADJUSTING RING
1 PR 3	14.553'	-18	-190
1 PR 4	12.873'	-18	-190
1 PR 5	12.309'	-18	-195
2 PR 3	12.054'	-18	-252
2 PR 4	12.241'	-18	-250
2 PR 5	11.719'	-18	-225

The inlet piping is 6" sch 160 with inside drameter = 5.187"

Isometric of inlet piping to 1PR3 - the one with the longest run is attached hereto.

The pipe has 8.7' of straight pipe and 5 90° long radius bends with 9" radius. ($r/d = 1.735$) [Equivalent length of these 90° bends = 16 [Based on Crane A-27 1969] [Based on Crane A-29 1982]

@ rated Flow of steam = 420,000 lb/hr at 2500 psi @ 600°F,

Raynolds # = 22×10^6

Friction factor for the 6" pipe from Crane page 3-19 [1982] = 0.015

PSEG CALCULATION CONTINUATION SHEET	TITLE PZR SAFETY VALVE INLET PIPING PRESSURE DROP	ID NO. S-C-R200-MDC-91-1	SHEET 3 OF 7
		REFERENCE NUREG 737, II-D-1 NRC LETTER 1-4-89	
	ORIGINATOR DATE	km 6/1/89	
	PEER REVIEWER DATE	ph 7/6/89	

MPR-EPRI METHOD FOR PRESSURE DROP CALCULATION:

The method provides different formulas depending upon whether $T < 2L/a$ or $T > 2L/a$.

Where T = valve opening or closing time as specified in Table B·2

L = Inlet piping length in ft

a = steam sonic velocity = 1100'/sec.

$$\frac{2L}{a} = \frac{2 \times 14'}{1100} = 0.025 \text{ sec.}$$

Valve opening time = .010 sec

valve closing time = .016 sec

∴ for both opening or closing

$T < 2L/a$

The MPR method provides plant specific transient pressure drop for friction and accoustic wave separately. The total drop would be the combination of the two.

i.e. $\Delta_{PF} + \Delta_{AW}$

PSEG CALCULATION CONTINUATION SHEET	TITLE PZR SAFETY VALVE INLET PIPING PRESSURE DROP	ID NO. S-C-R200-MDC-91-1	SHEET 4 OF 7
		REFERENCE NUREG 737, II·D·1 NRC LETTER 1-4-89	
	ORIGINATOR hm DATE 6/1/89 PEER REVIEWER ph DATE 7/6/89		

$$\Delta PF = \frac{\left[K + \frac{FL}{D}\right]\left[C\dot{M}\right]^2}{2 g_c \rho A^2} \quad \& \quad \Delta_{AW} = \frac{a[C\dot{m}]}{g_c A} + \frac{[C\dot{m}]^2}{2 g_c \rho A^2}$$

where K = dimensionless loss coefficient which is 0 for Salem nozzle as specified in procedure

F = friction factor
= .015 as calculated before

L/D = Piping equivalent length (dimensionless)

$\dot{M}^*$ = Rated valve flow rate as specified from table [B1 of Ref 2] in lbs/sec
$= \frac{458000}{3600} = 127.2$ lbs/sec.

g_c = Gravitational constant = 32.2 ft/sec^2

ρ = steam density which is 7.65 lb/ft^3 at 2500 psi

A = inlet piping flow area
$= (5.187)^2 \times \pi/4 = .147$ sq.ft.

a = steam sonic velocity = 1100 ft/sec

L/D = from the piping sketch
$= \frac{8.7'}{[5.187/12]} + 5 \times 16$
$= 20 + 80 = 100$

[16 comes from $r/d = \frac{9}{5.187} = 1.73$ & Page A-29 - Crane 82 Page A-30 & 2 Crane 69]

C = flow rate constant from table B-2 [Ref. 2]

PSEG CALCULATION CONTINUATION SHEET	TITLE PZR SAFETY VALVE INLET PIPING PRESSURE DROP	ID NO. S-C-R200-MDC-91-1	SHEET 5 OF 7
		REFERENCE NUREG 737, II.D.1. NRC LETTER 1-4-89	
	ORIGINATOR DATE	km 6/1/89	
	PEER REVIEWER DATE	pk 7/6/89	

$$\therefore A_{PF} = \frac{\left[K + f\frac{L}{D}\right]\left[C m\right]^2}{2 g_c \rho A^2}$$

C = 1.11 for valve opening

$$= \frac{\left[0 + .015 \times 100\right]\left[1.11 \times 127.3\right]^2}{2 \times 32.2 \times 7.65 \times .147^2 \times 144}$$

$$= \frac{29949}{1533} = 19.53 \text{ psi}$$

$$A_{AW} = \frac{a[Cm]}{g_c A} + \frac{[Cm]^2}{2 g_c \rho A^2}$$

$$= \frac{1100[1.11 \times 127.3]}{32.2 \times .147 \times 144} + \frac{[1.11 \times 127.3]^2}{2 \times 32.2 \times 7.65 \times .147^2 \times 144}$$

$$= 228 + 13$$

$$= 241 \text{ psi}$$

$\therefore$ Pressure drop (transient) for valve opening $= 20 + 241$

$= 261$ psi.

which compares favorably with 263 psi drop for EPRI valve test as identified in table B-3.

PSEG CALCULATION CONTINUATION SHEET	TITLE PZR SAFETY VALVE INLET PIPING PRESSURE DROP	ID NO. S-C-R200-MDC-91-1			SHEET 6 OF 7
		REFERENCE NUREG 737, II.D.1 NRC LETTER 1-4-89			
	ORIGINATOR	hm			
	DATE	6/1/89			
	PEER REVIEWER	ph			
	DATE	7/6/89			

[Although the pressure drop number looks marginally close to allowable, actual drop could be less if the valve capacity of rated Salem valves of 420,000 lb/hr is used instead of 458,000 lb/hr used in the calculation. Also the value of C used which is 1.11 is the maximum for the range from 1 to 1.11 A lower value of C could be used [like 1.06] since Salem valves lower ring settings are identical to the one tested at EPRI which is -18 for lower and -71 for upper as evidenced in test run 929].

Similar transient pressure drop for valve closing can be obtained by substituting value of C as 0.69 instead of 1.11.

The results of transient pressure drop for valve closing are

$$\Delta P_F + \Delta A_W = 7.54 + [141.7 + 5.03]$$
$$= 154 \text{ psi}$$

Which compares favorably with 165 psi drop for EPRI valve test as identified in table B-3. & hence Salem pressure drop meets EPRI-MPR Criteria.

ATTACHMENT TO
CALCULATION
S-C-R200-MDC-091
REV 1

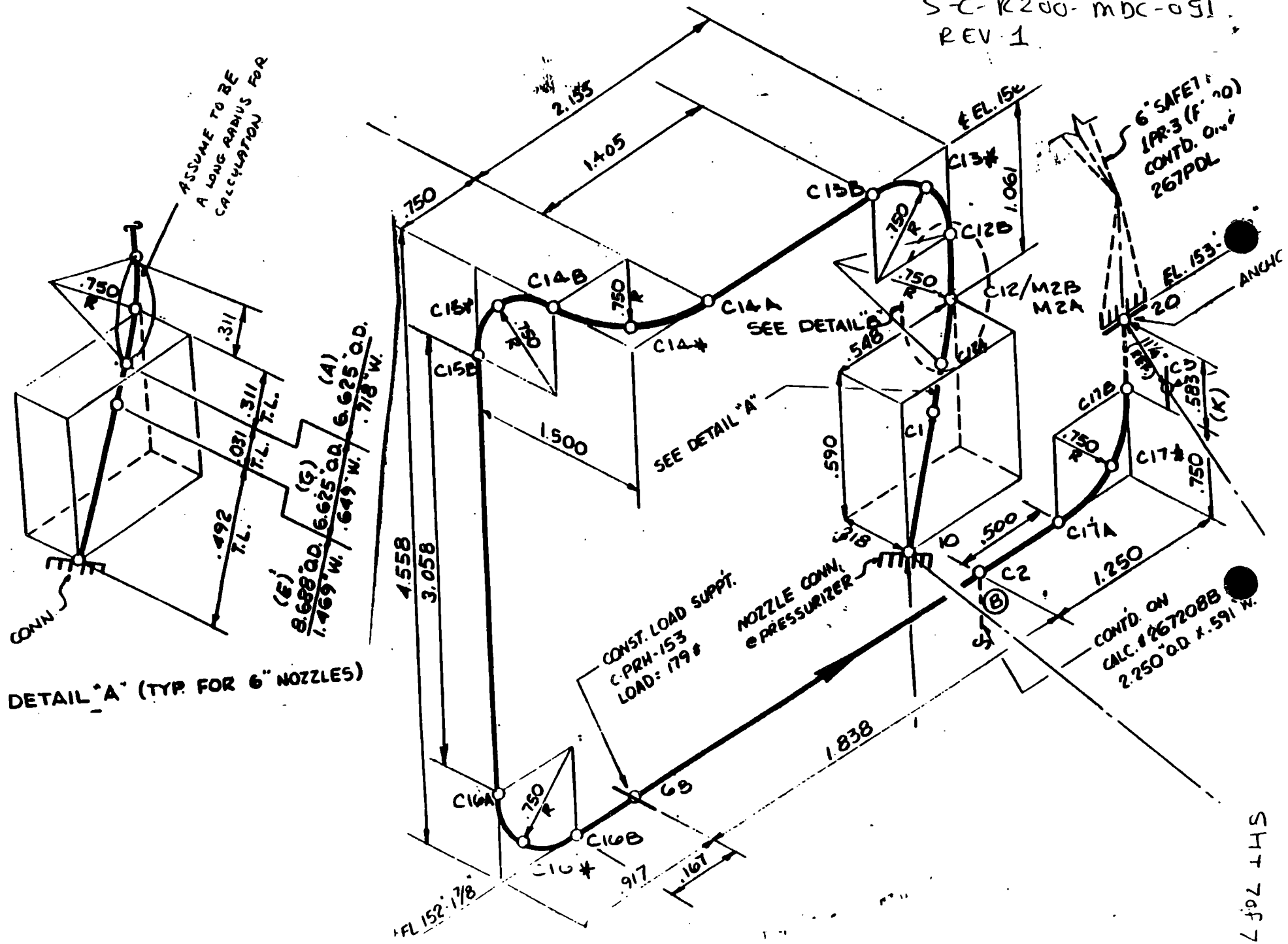

SHT 7 of 7

TABLE 1

DISCHARGE PIPING - PZR SAFETIES SALEM

ITEM	1PR4	2PR3	2PR4	2PR5
6" Pipe Based on 567 PDL-S2 267 PDL-S1	42.26' Per Continuum Dynamics Report 82-29 [1PR4 provides the limiting conditions and thus bounds 1PR3 and 1PR5 also]	1.849 13.185 1.083 0.418 1.435 1.739 0.875 1.069 1.167 2.625 1.366 2.186 1.687 0.417 0.750 0.458 0.875 1.801 1.578 -- -- --	1.851 1.000 1.542 0.885 1.000 0.500 0.979 0.521 0.396 0.604 2.498 0.999 2.231 1.036 2.932 2.293 0.583 1.250 1.714 0.750 2.349 --	1.846 1.000 1.500 0.927 0.687 0.730 1.083 1.617 0.630 0.750 1.500 1.380 0.707 0.909 4.318 1.041 1.615 1.500 3.380 1.854 2.027 --
	42.26'	36.563'	27.913'	31.001
12" Piping from PRT to 131'-4" anchor Based on 567-PDL for Unit 2 and 267-PDL for Unit 1.	213.214'	212.451'	212.451'	212.451'
12" Piping from 131'-4" anchor to where 6" pipe joins	7.218'	8.802'	10.802'	9.500'
Fittings in 12" line	8 elbows	Identical to 1PR4	Identical to 1PR4	Identical to 1PR4
Fittings in 6" line	7 elbows	6 elbows	5 elbows	7 elbows
CONCLUSION	Salem 1 Backpressure is bounding for S1 & S2			

Public Service Electric and Gas Company
June 9, 1989
0140-039-NY-010

QUESTION 9

ATTACHMENT 2

A. Safety Valve 1PR3

VOLUME (NODE)	LENGTH (FEET)	TEMPERATURE (°F)	
		CASE 4	CASE 5
301	0.5230	Steam at 668°F	Water at 668°F
302	0.5890	Steam at 668°F	Water at 668°F
303	1.1781	Steam at 668°F	Water at 668°F
304	1.4050	Steam at 668°F	Water at 668°F
305	1.1781	Steam at 668°F	Water at 668°F
306	1.1781	Water at 550°F	Water at 550°F
307	3.0580	Water at 550°F	Water at 550°F
308	1.1781	Water at 550°F	Water at 550°F
309	2.5050	Water at 550°F	Water at 550°F
310	1.1781	Water at 550°F	Water at 550°F
311	0.5830	Water at 506°F	Water at 506°F
312	0.9380	Water at 210°F	Water at 210°F

UIPSTREAM SAFETY VALVE 1.PR3

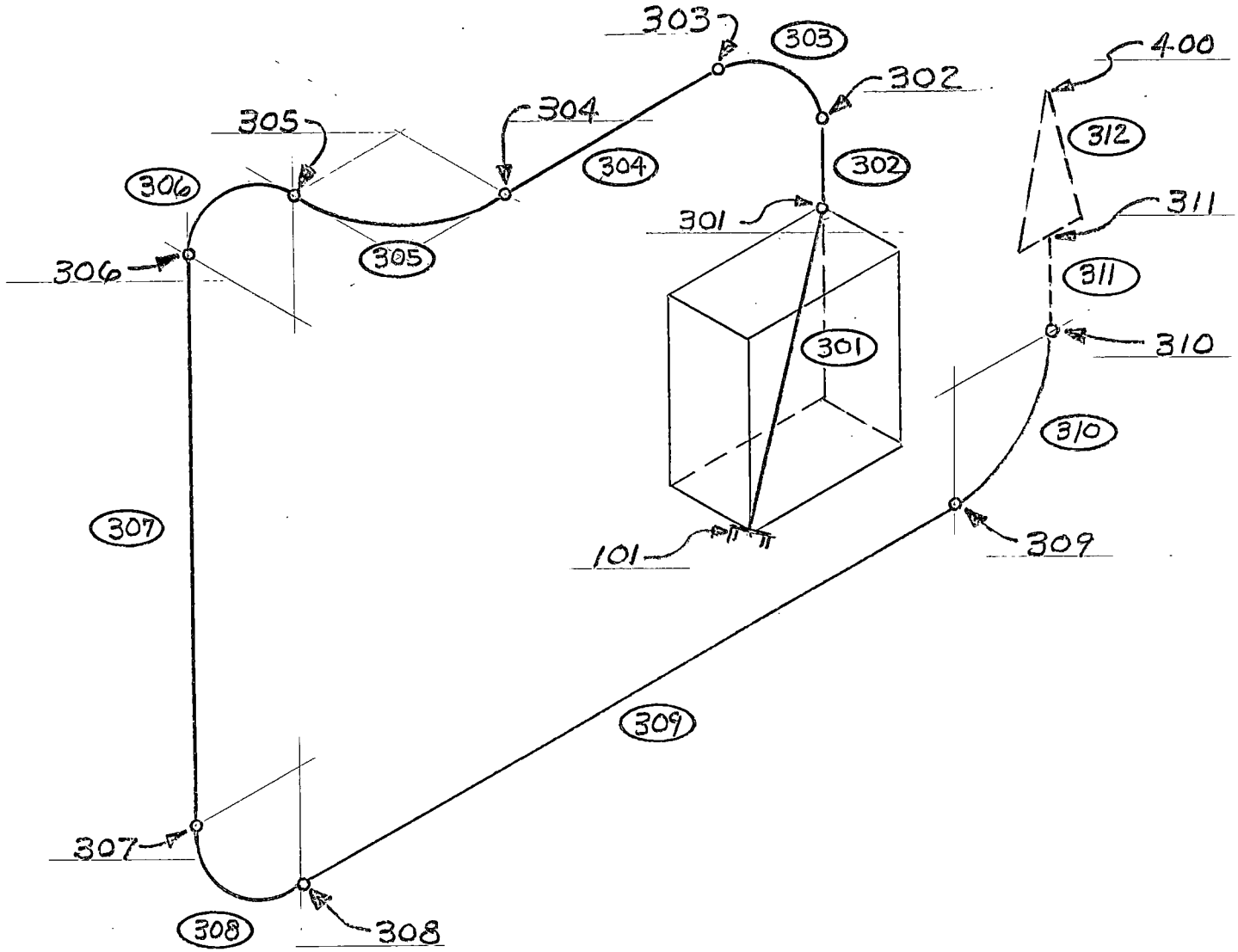

QUESTION 9
SKETCH 1

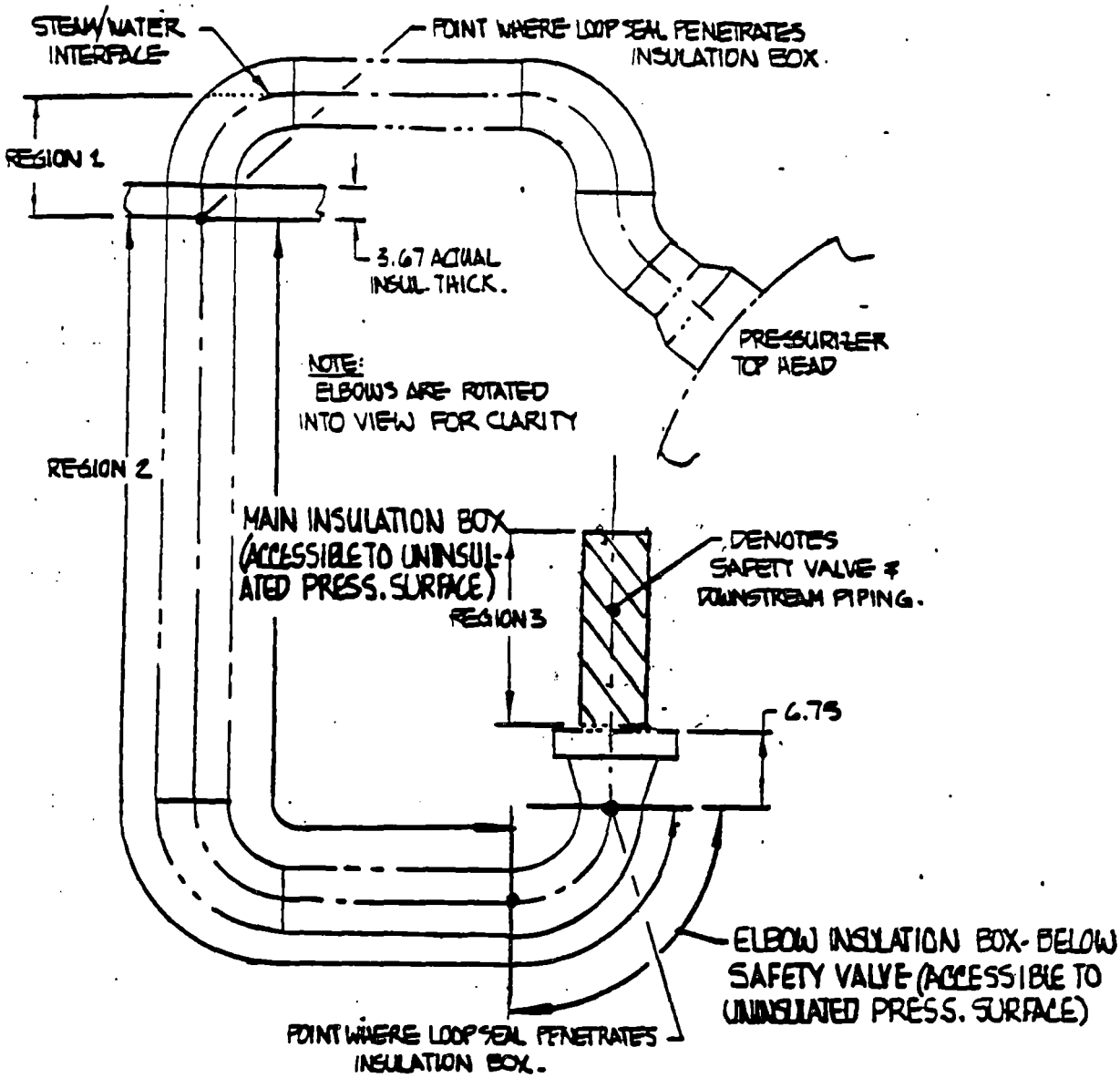

Loop Seal Arrangement

Geometry

- Pipe O.D. = 6.625 in; Pipe Wall Thickness = .718 in. (6" N.P.S. - Schedule 160)
- CenterLine Length of Region 1 = 12.67 in.
- CenterLine Length of Region 2 = 74.73 in.
- CenterLine Length of Region 3 = 36.00 in.

} See Appendix B

NOTE: Region 3 length (Valve & Downstream Piping) was determined from previous experience so as to provide sufficient temperature decay from the loop seal pipe/valve interface to ambient temperature. (Ref. Page 3.4: Temperature Profile of Region 3).

QUESTION 9
SKETCH 3

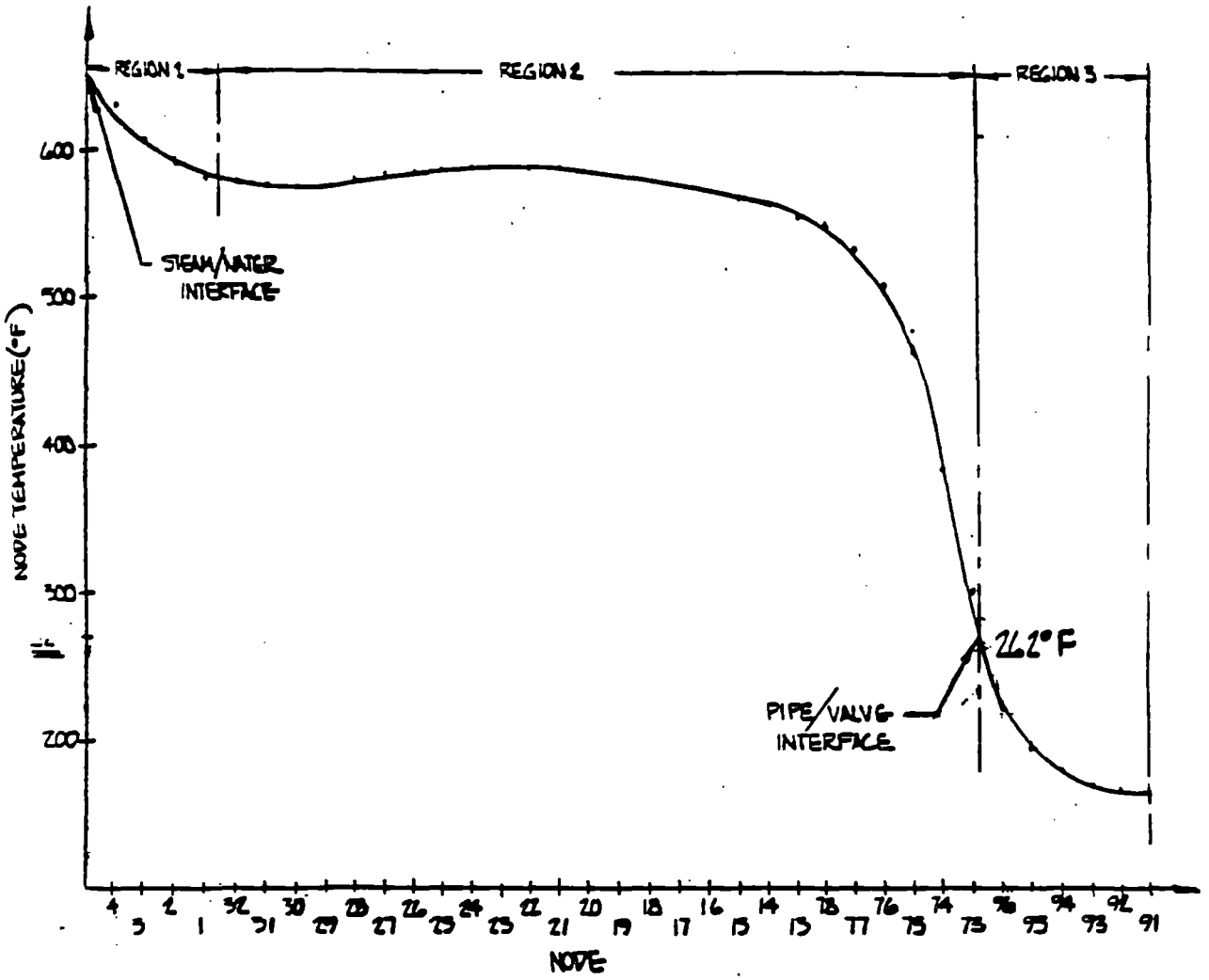

LOOP SEAL TEMPERATURE PROFILE

TABLE 2 (Question 13)

STRESS CHECK OF THE HIGHEST LOADED NODES

STRESS CHECK, DEFAULT OPTION

A) EQ 8 PRES + DW, allowable 1.0 SH @ Node 890A Elbow

4250 + 2281 = 6531 psi < 15990

B) EQ 9U PRES + DW + OBE, allowable 1.2 SH @ Node 997B Elbow

4250 + 698 + 2783 = 7731 < 19188 psi

C) EQ 10 Range of Thermal allowable SA = 27497.5 psi @ Node 840A

24778 psi < 27497.5 psi

OK no need to check EQ 11

STRESS CHECK, NON DEFAULT OPTION

D) LC2S PRESS + DW + RVAS allowable 1.8 SH @ Node 840A Elbow

Level C (Attachment 4)

4250 + 819 + 21948 = 27017 psi < 28782 psi

E) LC4S PRESS + DW + $(OBE^2 + RVAS^2)^{1/2}$ allowable 1.8 SH

Level C

$4250 + 819 + (1021^2 + 21948^2)^{1/2} = 27040 < 28782$ psi

F) LC4S PRESS + DW + $(SSE^2 + RVAS^2)^{1/2}$ allowable 2.4 SH

Level D

$4250 + 819 + (2292^2 + 21948^2)^{1/2} = 27136$ 38376 psi

REFERENCES (Question 13)

1. Impell Calc. No. 203 "Functionally Study Elev. 131 Anchors", 5/6/85

2. Computer Runs

a.	ACWYWVBM	2/11/85	DW, Thermal, Seismic
b.	ACWYNSOC	2/19/85	EVAS Loading
c.	MIKEONA	3/23/84	Code Check
d.	MIKEORG	3/15/84	Discharge Piping, RVAS
e.	MIKEDTA	3/22/84	Discharge Piping RVAW