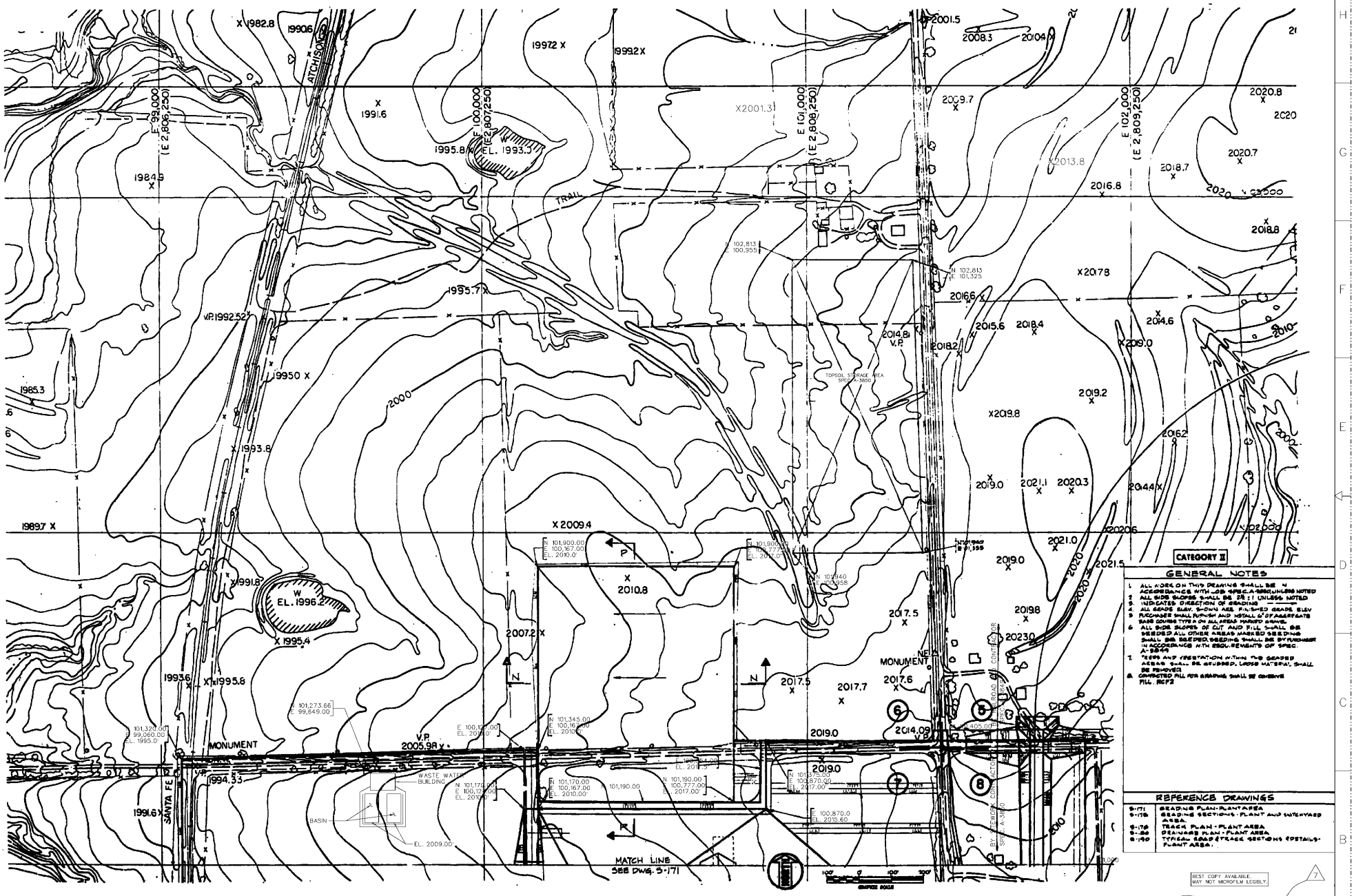

Released by Document Services Release Date: 05/17/02

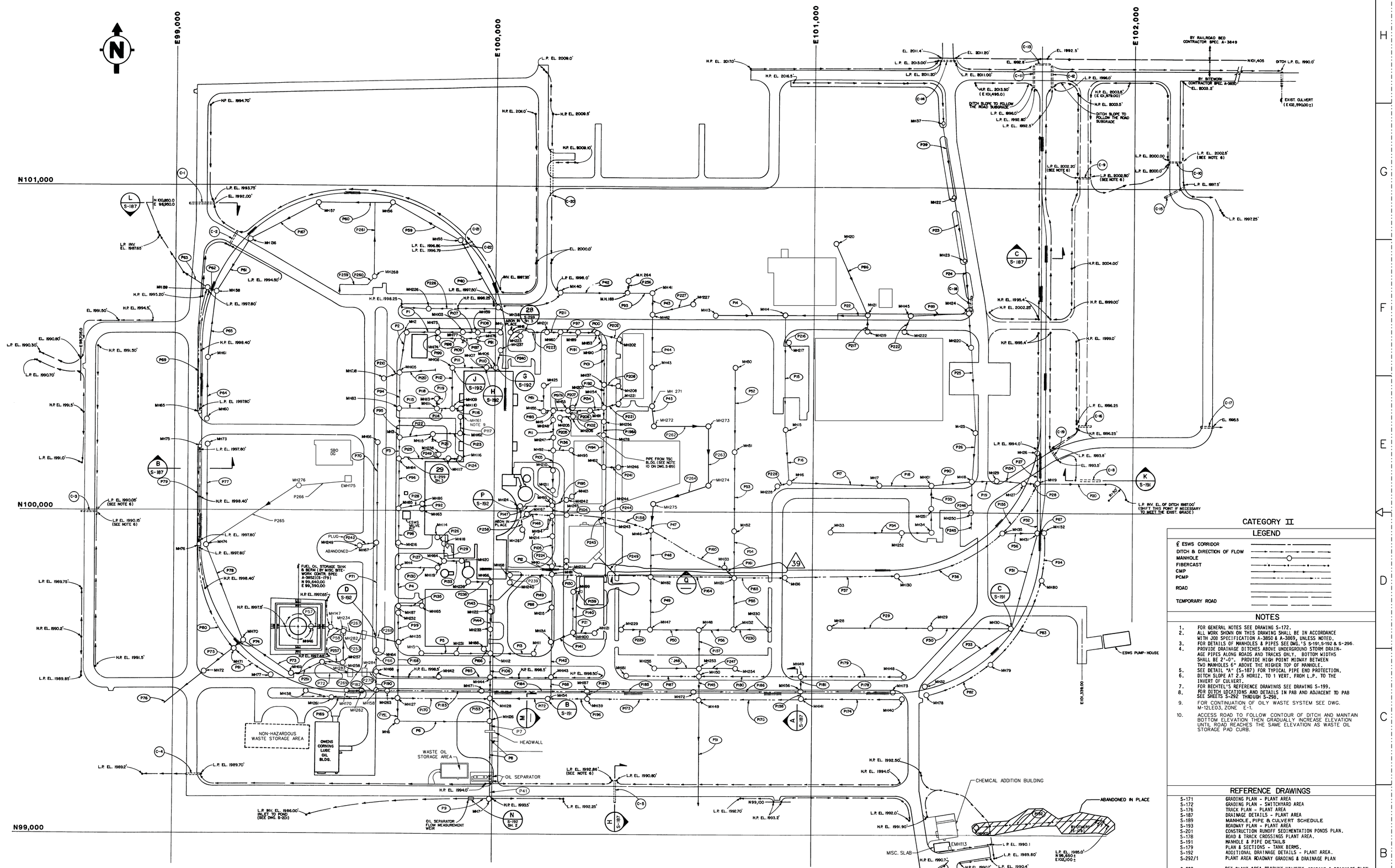
N
E99,000
E100,000
E101,000
E102,000
N101,000
N100,000
N99,000
NON-HAZARDOUS WASTE STORAGE AREA
OWENS CORNING LUBE OIL BLDG.
WASTE OIL STORAGE AREA
OIL SEPARATOR
OIL SEPARATOR FLOW MEASUREMENT WEIR
HEADWALL
CHEMICAL ADDITION BUILDING
ABANDONED IN PLACE
MISC. SLAB
ESWS PUMP HOUSE
EXIST. CULVERT (E 102,590.00±)
DITCH L.P. EL. 1990.0'
BY RAILROAD BED CONTRACTOR SPEC. A-3849
BY SITEWORK CONTRACTOR SPEC. A-3850
DITCH SLOPE TO FOLLOW THE ROAD SUBGRADE
PIPE FROM TSC BLDG. (SEE NOTE 10 ON DWG. S-89)
FUEL OIL STORAGE TANK & BERM (BY MISC. SITE-WORK CONTR. SPEC A-3852(S-179) N 99,640.00 E 99,590.00
L.P. EL. 1990.05' (SEE NOTE 6)
L.P. EL. 1990.15' (SEE NOTE 6)
L.P. EL. 1992.88' (SEE NOTE 6)
L.P. INV. EL. 1986.00' INLET TO POND (SEE DWG. S-201)
L.P. INV. EL. OF DITCH 1987.00' (SHIFT THIS POINT IF NECESSARY TO MEET THE EXIST. GRADE)
L.P. EL. 2002.20' (SEE NOTE 6)
L.P. EL. 2002.50' (SEE NOTE 6)
L.P. EL. 2002.5' (SEE NOTE 6)
L.P. EL. 1990.0'
L.P. EL. 1989.80'
L.P. EL. 1988.0' N 98,650± E 102,100±
L.P. EL. 1990.1
L.P. EL. 1990.4'
L.P. EL. 1990.7'
H.P. EL. 1990.7'
H.P. EL. 1990.2'
H.P. EL. 1991.90'
L.P. EL. 1992.0'
L.P. EL. 1992.70'
H.P. EL. 1993.2'
N99,100
L.P. EL. 1992.25'
H.P. EL. 1993.5'
H.P. EL. 1994.0'
H.P. EL. 1992.50'
L.P. EL. 1990.80'
L.P. EL. 1989.2'
L.P. EL. 1989.70'
L.P. EL. 1989.85'
L.P. EL. 1989.75'
H.P. EL. 1991.5'
H.P. EL. 1990.2'
L.P. EL. 1990.30'
L.P. EL. 1990.80'
L.P. EL. 1991.0'
L.P. EL. 1991.50'
H.P. EL. 1991.50'
H.P. EL. 1991.5'
H.P. EL. 1994.0'
H.P. EL. 1995.4'
H.P. EL. 1995.4'
H.P. EL. 1999.0'
H.P. EL. 1999.0'
H.P. EL. 2004.00'
H.P. EL. 2002.25'
H.P. EL. 2013.50' (E 101,495.0)
H.P. EL. 2013.5' (E 101,379.00)
H.P. EL. 2003.5'
H.P. EL. 2009.0'
H.P. EL. 2009.5'
H.P. EL. 2009.10'
H.P. EL. 2016.0'
H.P. EL. 2016.5'
H.P. EL. 2017.0'
H.P. EL. 1994.70'
H.P. EL. 1995.20'
H.P. EL. 1994.5'
H.P. EL. 1998.40'
H.P. EL. 1997.80'
H.P. EL. 1997.65'
H.P. EL. 1997.6'
H.P. EL. 1998.25'
H.P. EL. 1998.5'
H.P. EL. 1998.50'
L.P. EL. 1993.75'
L.P. EL. 1992.00'
L.P. EL. 1994.50'
L.P. EL. 1997.80'
L.P. EL. 1997.50'
L.P. EL. 1996.25'
L.P. EL. 1996.0'
L.P. EL. 1997.5'
L.P. EL. 1997.25'
L.P. EL. 1994.0'
L.P. EL. 1993.8'
L.P. EL. 1993.5'
L.P. EL. 1997.80'
L.P. EL. 1997.80'
L.P. EL. 1997.80'
L.P. EL. 1997.80'
L.P. EL. 1998.40'
L.P. EL. 1998.40'
L.P. EL. 1998.0'
L.P. EL. 1998.0'
L.P. EL. 1996.86
L.P. EL. 1996.79
L.P. EL. 2000.0'
L.P. EL. 2000.00
L.P. EL. 2000.0'
L.P. EL. 1997.5'
L.P. EL. 1997.25'
L.P. EL. 1996.25'
L.P. EL. 1996.25'
EL. 2011.4'
EL. 2011.20'
EL. 2011.00'
EL. 1992.5'
EL. 1992.8'
EL. 1993.5'
EL. 1995.5'
EL. 2000.0'
EL. 1991.50'
EL. 1990.80'
EL. 2003.2'
INV. EL. 1997.35'
ABDN IN PLACE
SBO DG
ESWS SHUT OFF VALVE
PLUG
ABANDONED
EMH175
EMH113
MH276
P266
P265
P39
P23
P24
P25
P26
P56
P66
P69
P64
P65
P61
P62
P63
P59
P60
P261
P259
P260
P67
P79
P77
P78
P76
P75
P80
P81
P72
P71
P57
P58
P73
P74
P70
P3
P4
P5
P6
P7
P8
P9
P41
P51
P52
P53
P54
P55
P56
P57
P50
P49
P48
P47
P46
P45
P44
P43
P42
P40
P41
P94
P95
P96
P97
P98
P99
P100
P101
P102
P103
P104
P105
P106
P107
P108
P109
P110
P111
P112
P113
P114
P115
P116
P117
P118
P119
P120
P121
P122
P123
P124
P125
P126
P127
P128
P129
P130
P131
P132
P133

MANHOLE SCHEDULE

	NO.	INV. EL.	TOP EL.	LOCATION NORTH COORD.	LOCATION EAST COORD.	DIA.	TYPE	REMARKS
●	1	1994.00	1999.20	100,553.00	100,021.50	4'-0"	A	
●	2	1992.70	1998.00	100,554.00	99,725.00	4'-0"	A	
●	3	1991.61	1998.00	100,230.90	99,696.00	5'-0"	A	
●	4	1990.88	1998.00	99,815.00	99,696.00	4'-0"	C	
●	5	1994.25	1998.00	99,559.00	99,780.00	3'-0"	A	
	6	1989.48	1996.88	99,345.00	99,696.00	6'-0"	A	
	7	1987.18	1998.00	99,094.00	99,995.50	4'-0"		SEE S-0200 SHT. 2
	8	1993.75	1997.20	100,552.00	100,051.50	4'-0"	A	ABANDON - PLUGGED
●	9	1991.94	1999.50	100,311.00	100,185.00	5'-0"	A	CLOSED TOP
●	10	1990.98	1999.70	99,831.00	100,185.00	5'-0"	A	15'-0" O.C. TRACK NO: 2, DROP MANHOLE - CLOSED TOP
●	11	1993.50	1998.00	99,559.00	100,132.00	3'-0"	A	
●	12	1993.10	1998.00	99,559.00	99,994.75	5'-0"	A	
●	13	1995.50	2001.60	100,585.86	100,705.90	4'-0"	A	CLOSED TOP
●	14	1995.00	2005.18	100,596.00	100,912.00	5'-0"	A	DROP MANHOLE TYPE II
●	15	1993.05	2004.25	100,246.00	100,912.00	5'-0"	A	
●	16	1992.10	2000.70	100,085.00	100,921.00	5'-0"	A	CLOSED TOP
	17	1991.05	1997.00	100,076.00	101,207.00	5'-0"	A	
	18	1989.90	1997.50	100,085.00	101,493.00	4'-0"	C	
	19	1988.85	1996.00	100,085.00	101,695.00	4'-0"	C	SLAB TOP
	20	2005.00	2009.00	100,821.10	101,062.50	4'-0"	A	
●	21	2001.30	2005.10	100,596.00	101,160.00	4'-0"	A	
	22	2005.00	2008.70	100,968.10	101,432.00	4'-0"	A	
	23	2000.40	2004.63	100,777.90	101,465.50	4'-0"	A	
	24	1999.40	2004.10	100,607.00	101,485.00	5'-0"	A	
	25	1991.20	2003.20	100,246.00	101,502.00	5'-0"	B	DROP MANHOLE TYPE II
	26	1991.50	1994.00	100,194.06	101,679.28	1'-6"	D	TRACK NO: 2
	27	1989.10	1997.00	100,085.00	101,650.27	6'-0"	A	TRACK NO: 2
	28	1994.50	1998.00	99,639.50	101,054.00	2'-6"	D	
	29	1992.78	1998.00	99,639.50	101,380.00	4'-0"	A	
	30	1990.95	1997.50	99,639.50	101,614.34	5'-0"	A	TRACK NO: 1 SEE DETAIL "C" ON DWG. S-0191 SEE NOTE 8.
	31	1990.10	1997.50	99,935.50	101,695.00	4'-0"	C	TRACK NO: 1 SEE NOTE 8.
	32	1994.75	1997.50	99,459.57	101,341.79	3'-0"	A	TRACK NO: 1
	33	1994.50	1998.00	99,935.50	101,054.00	4'-0"	A	
	34	1992.57	1998.00	99,935.50	101,372.00	4'-0"	A	
	35	1991.00	1998.00	99,935.50	101,575.12	4'-0"	A	TRACK NO: 2
	36	1993.90	1998.00	99,805.00	100,912.00	4'-0"	A	TRACK NO: 2 11'-0" O.C.
●	37	2007.00	2011.10	101,204.20	101,396.20	3'-0"	A	
	38	1994.60	1997.50	100,631.00	100,006.54	3'-0"	A	TRACK NO: 5
	40	1994.10	1998.00	100,673.00	100,205.00	3'-0"	D	
	41	1993.00	1998.00	100,673.00	100,487.00	5'-0"	A	
●	42	1992.70	1999.42	100,605.00	100,496.00	5'-0"	A	CLOSED TOP
●	43	1992.30	1997.41	100,444.56	100,497.23	5'-0"	A	
	46	1990.75	1997.00	99,947.30	100,497.25	5'-0"	A	TRACK NO: 4 9'-0" O.C. DROP MANHOLE
	47	1989.75	1997.00	99,639.50	100,497.25	4'-0"	C	
	48	1989.15	1997.00	99,639.50	100,645.50	4'-0"	C	
	49	1988.33	1997.89	99,424.00	100,645.50	4'-0"	C	TRACK NO: 1 11'-0" O.C. CLOSED TOP
●	50	1994.50	1998.28	100,441.23	100,760.05	3'-0"	A	
●	51	1993.00	1998.06	100,185.48	100,759.75	4'-0"	A	
	52	1992.50	1997.00	99,935.50	100,759.75	4'-0"	A	
●	53	1992.04	1998.50	100,309.55	100,242.51	5'-0"	A	CLOSED TOP
	54	1989.50	1997.89	99,424.00	100,182.52	5'-0"	A	TRACK NO: 1 11'-0" O.C. DROP MANHOLE - CLOSED TOP
	55	1992.60	1996.50	100,833.32	99,889.07	4'-0"	A	TRACK NO: 5
	56	1991.50	1996.30	100,950.21	99,676.48	5'-0"	A	TRACK NO: 5
	57	1990.40	1996.30	100,951.71	99,437.06	5'-0"	A	TRACK NO: 1
	58	1988.40	1995.75	100,668.83	99,125.63	6'-0"	A	TRACK NO: 1
	59	1988.25	1997.80	100,677.52	99,101.12	4'-0"	C	TRACK NO: 1 DROP MANHOLE TYPE II
	60	1992.15	1995.75	100,274.87	99,100.00	3'-0"	A	TRACK NO: 1
	61	1990.70	1995.75	100,474.87	99,100.00	4'-0"	A	TRACK NO: 1
●	62	1993.75	1998.00	100,136.00	100,345.00	4'-0"	A	PROVIDE OPENING FOR SUB - BASE DRAIN
●	63	1994.00	1998.00	100,078.00	100,242.50	3'-0"	A	
	64	1992.20	1997.75	99,577.50	99,631.00	4'-0"	A	
	65	1993.80	1998.67	100,296.87	99,074.00	3'-0"	A	HEAVY DUTY CLOSED TOP, FLUSH WITH TOP OF ROAD
	66	1995.50	1997.75	100,210.50	99,631.00	3'-0"	D	
●	67	1993.80	1997.75	99,894.00	99,631.00	4'-0"	A	
	68	1991.82	1997.75	99,502.50	99,631.00	4'-0"	B	
	69	1990.64	1995.75	99,484.54	99,373.11	4'-0"	A	TRACK NO: 1
	70	1989.34	1995.75	99,595.13	99,216.21	5'-0"	A	TRACK NO: 1
	71	1988.85	1995.75	99,577.61	99,197.00	5'-0"	A	TRACK NO: 1
	72	1988.46	1997.00	99,493.00	99,090.00	4'-0"	C	
	73	1992.40	1995.75	100,211.87	99,100.00	4'-0"	A	TRACK NO: 1
	74	1990.60	1995.75	99,891.97	99,100.00	4'-0"	A	TRACK NO: 1
	75	1993.75	1998.67	100,201.87	99,074.00	3'-0"	A	HEAVY DUTY CLOSED TOP FLUSH WITH TOP OF ROAD
	76	1991.89	1998.67	99,901.87	99,074.00	4'-0"	B	HEAVY DUTY CLOSED TOP FLUSH WITH TOP OF ROAD
	77	1992.75	1995.75	99,491.56	99,301.93	3'-0"	A	TRACK NO: 1
	78	1994.40	1997.50	99,434.13	101,347.15	3'-0"	A	CLOSED TOP, TRACK NO: 1
	79	1993.40	1997.50	99,528.61	101,545.98	4'-0"	A	CLOSED TOP, TRACK NO: 1

MANHOLE SCHEDULE (CONT.)

	NO.	INV. EL.	TOP EL.	LOCATION NORTH COORD.	LOCATION EAST COORD.	DIA.	TYPE	REMARKS
	80	1992.32	1997.50	99,776.49	101,705.85	4'-0"	B	CLOSED TOP, TRACK NO: 1 SEE NOTE 8.
●	81	1990.91	1999.80	99,805.00	100,185.00	5'-0"	A	11'-0" O.C. TRACK NO: 2, DROP MANHOLE - CLOSED TOP
	82	1990.30	1998.50	99,805.00	100,497.25	4'-0"	C	11'-0" O.C. TRACK NO: 2 DROP MANHOLE
●	83	1991.80	1998.00	100,319.75	99,696.00	5'-0"	A	
●	84	1991.48	1998.00	100,163.52	99,696.00	5'-0"	A	
●	85	1991.38	1998.00	100,002.75	99,696.00	5'-0"	A	D-44 DROP MANHOLE TYPE II
●	86	1993.00	1999.12	100,019.75	99,769.04	3'-0"	A	D-107
●	87	1998.59	1998.50	99,711.00	99,696.00	5'-0"	A	CLOSED TOP
●	88	1994.25	1999.45	99,572.54	99,975.33	3'-0"	A	D-113
●	89	1993.43	1998.33	100,554.00	100,266.00	4'-0"	A	
●	90	1992.95	1998.00	100,513.00	100,345.00	4'-0"	A	
●	91	1992.25	1998.00	100,311.00	100,304.00	4'-0"	A	
●	92	1991.61	1998.33	100,185.00	100,185.00	5'-0"	A	
●	93	1991.28	1998.00	100,019.00	100,185.00	5'-0"	A	9'-0" O.C. TRACK NO: 4
●	94	1991.25	1998.00	99,991.00	100,185.00	5'-0"	A	9'-0" O.C. TRACK NO: 4, DROP MANHOLE TYPE I
●	95	1993.75	1998.00	100,191.50	100,242.50	3'-0"	A	
	98							
	99	1994.50	1998.00	99,750.50	100,254.00	4'-0"	A	
	100	1993.80	1997.40	99,619.50	100,254.00	4'-0"	A	
	101	1990.40	1997.50	100,076.00	101,372.00	6'-0"	A	
●	102	1989.00	1992.25	99,028.75	101,509.77	3'-0"	A	CLOSED TOP, SEE SECT. C-C ON DRAWING S-0179
●	103	1993.30	1998.67	100,554.00	99,899.50	4'-0"	A	OD-122
●	105	1992.38	1998.00	100,412.04	99,696.00	5'-0"	A	
●	106	1993.33	1999.30	100,442.70	100,018.00	4'-0"	A	D-101 SEE DETAIL 'G' ON DRAWING S-0192
●	107	1993.15	1999.48	100,442.70	99,948.08	4'-0"	A	D-102 SEE DETAIL 'H' ON DRAWING S-0192
●	108	1992.73	1999.00	100,440.37	99,869.00	5'-0"	A	SEE DETAIL 'J' ON DRAWING S-0192
●	109	1992.28	1999.17	100,319.75	99,871.00	5'-0"	A	
●	110	1993.50	1999.46	100,319.75	99,896.87	3'-0"	A	D-103
●	111	1992.08	1998.36	100,319.75	99,811.38	5'-0"	A	
●	113	1992.90	1999.03	100,358.33	99,811.38	3'-0"	A	OD-120
●	114	1994.25	1999.30	99,911.27	99,819.75	3'-0"	A	D-109
●	115	1992.60	1997.96	100,240.25	99,795.00	4'-0"	A	OD-121
●	116	1993.39	1999.46	100,163.52	99,908.58	4'-0"	A	D-105
●	117	1993.09	1999.46	100,163.52	99,872.50	4'-0"	A	D-106
●	118	1993.50	1999.44	99,901.00	99,845.09	3'-0"	A	D-110
●	119	1993.05	1999.43	99,815.00	99,826.50	4'-0"	A	CLOSED TOP
●	120	1994.40	1999.10	99,849.54	99,923.74	3'-0"	A	D-111
	121	1995.00	1997.40	99,619.50	100,318.00	3'-0"	A	
●	122	1993.44	1999.01	99,685.00	99,987.79	4'-0"	A	D-114
●	124	1991.50	1999.50	100,014.85	100,084.75	3'-0"	A	D-116 CLOSED TOP
●	125	1993.25	1998.00	100,385.00	100,167.00	4'-0"	B	
	126	1988.58	1996.88	99,345.00	99,995.50	4'-0"	C	NO DROP
	127	1989.72	1997.89	99,424.00	99,696.00	5'-0"	A	11'-0" O.C. TRACK NO: 1 CLOSED TOP
	128	1988.95	1997.89	99,424.00	99,995.50	4'-0"	C	11'-0" O.C. TRACK NO: 1 WITH SLAB TOP - CLOSED TOP
	129	1989.60	1997.50	100,085.00	101,553.00	6'-0"	A	
	130	1992.25	1998.50	99,805.32	101,261.32	4'-0"	B	TRACK NO: 2
	131	1991.50	1998.50	99,805.00	100,759.75	5'-0"	A	TRACK NO: 2 11'-0" O.C. DROP MANHOLE
	132	1998.30	1997.00	99,639.50	100,759.75	4'-0"	C	
	133	1994.00	1998.00	99,826.98	100,717.97	4'-0"	B	TRACK NO: 4 & TRACK NO: 2 15'-0" O.C.
●	134	1998.22	1998.00	99,588.00	100,185.00	5'-0"	A	
●	135	1998.23	1998.00	99,588.00	99,696.00	6'-0"	A	
	136	1989.30	1996.50	100,833.69	99,229.37	5'-0"	B	TRACK NO: 1
●	137	1992.57	1998.00	100,385.00	100,345.00	4'-0"	A	
	138	1994.25	1997.89	99,443.39	99,411.26	3'-0"	A	TRACK NO: 1 CLOSED TOP
	139	1994.00	1997.89	99,424.00	100,306.00	3'-0"	A	TRACK NO: 1 11'-0" O.C. CLOSED TOP
	140	1995.00	1997.89	99,424.00	101,273.09	3'-0"	A	TRACK NO: 1 CLOSED TOP
	141	1993.10	1997.89	99,424.00	100,960.00	4'-0"	B	TRACK NO: 1 11'-0" O.C. CLOSED TOP
●	142	1994.25	1997.33	99,484.00	99,842.00	3'-0"	A	
●	143	1989.83	1997.33	99,484.00	100,185.00	5'-0"	A	DROP MANHOLE
●	144	1998.30	1997.33	99,484.00	99,995.50	5'-0"	D	DROP MANHOLE
●	145	2001.00	2005.41	100,596.00	101,300.00	3'-0"	A	
	146	1993.00	1997.00	99,640.00	99,432.00	3'-0"	A	SEE DETAIL 'B' ON DRAWING S-0179
	147	1990.90	1997.55	99,640.00	99,482.00	4'-0"	A	SEE DETAIL 'A' ON DRAWING S-0179
	148	1995.00	1998.44	99,484.00	101,289.00	3'-0"	A	CLOSED TOP
	149	1994.00	1998.44	99,484.00	100,960.00	4'-0"	B	CLOSED TOP
	150	1988.56	1998.44	99,484.00	100,645.50	4'-0"	C	CLOSED TOP
	151	1995.00	1998.44	99,484.00	100,416.00	3'-0"	A	CLOSED TOP
	152	1991.50	1998.00	99,935.50	101,719.00	4'-0"	B	CLOSED TOP TRACK NO: 1 SEE NOTE 8.
●	153	1993.05	1999.68	100,550.00	100,341.00	4'-0"	B	HEAVY DUTY CLOSED TOP FLUSH WITH TOP OF ROAD
●	154	1992.36	1998.00	100,315.00	100,341.00	5'-0"	A	HEAVY DUTY CLOSED TOP FLUSH WITH TOP OF ROAD
●	155	1992.45	1998.00	100,311.00	100,167.00	4'-0"	B	
	156	1993.71	1998.58	99,442.00	100,960.00	3'-0"	A	
	157	1994.12	1997.56	99,442.00	100,300.00	3'-0"	A	
	158	1992.00	1999.00	99,442.00	99,631.00	3'-0"	A	DROP MANHOLE

MANHOLE SCHEDULE (CONT.)

	NO.	INV. EL.	TOP EL.	LOCATION NORTH COORD.	LOCATION EAST COORD.	DIA.	TYPE	REMARKS
●	159	1993.50	1998.03	100,554.00	99,944.25	4'-0"	A	OD-118
●	160	1993.54	1998.00	100,554.00	100,209.75	4'-0"	A	
●	161	1993.75	1999.46	100,286.92	99,896.35	4'-0"	A	OD-117 OILY WASTE
●	162	1993.56	1999.46	100,240.25	99,896.35	4'-0"	A	D-104
●	163	1993.70	1999.45	100,002.75	99,777.04	3'-0"	A	D-108
●	164	1993.15	1998.93	99,849.54	99,845.09	4'-0"	A	
●	165	1994.00	1999.45	99,711.00	99,778.89	3'-0"	A	D-112 CLOSED TOP
●	166	1994.00	1999.00	99,782.54	99,994.75	3'-0"	A	D-115
●	167	1996.25	1999.28	99,991.00	100,100.00	3'-0"	A	ABDN. IN PLACE
●	168	1996.25	1999.33	99,805.00	100,049.00	3'-0"	A	
	169	1993.28	1998.00	100,673.00	100,416.00	5'-0"	A	
	170	1995.20	1998.58	99,446.00	99,545.00	3'-0"	A	CLOSED TOP
	171	1995.20	1998.58	99,446.00	99,966.00	3'-0"	A	CLOSED TOP
	172	1995.20	1998.58	99,446.00	100,630.00	3'-0"	A	CLOSED TOP
	173	1995.20	1998.58	99,446.00	101,250.00	3'-0"	A	CLOSED TOP
●	174	1993.19	1998.00	100,530.75	99,823.00	4'-0"	A	
●	175	1993.04	1998.00	100,554.00	99,823.00	4'-0"	A	
	176	1993.90	1999.00	100,530.37	99,944.25	2'-0"	E	OD-118
	177	1993.64	1999.00	100,530.75	99,899.50	2'-0"	E	OD-122
●	178	1993.30	1998.00	100,233.00	100,342.83	3'-0"	A	FOR 8" DRAIN FROM TECH. SUPPORT CENTER BUILDING
●	201	1993.60	1998.00	100,554.00	100,170.00	4'-0"	A	
●	202	1993.50	1998.50	100,533.00	100,390.00	2'-0"	E	SEE DETAIL 2 ON DWG. S-0296
●	205	1995.50	1998.00	100,290.00	100,210.00	2'-0"	E	SEE DETAIL 2 ON DWG. S-0296
●	206	1995.25	1998.00	100,290.00	100,234.00	2'-0"	E	SEE DETAIL 2 ON DWG. S-0296
●	207	1995.00	1998.00	100,317.00	100,234.00	2'-0"	E	SEE DETAIL 2 ON DWG. S-0296
●	208	1995.50	1997.90	100,400.00	100,384.00	2'-0"	E	SEE DETAIL 2 ON DWG. S-0296
●	210		1990.00	100,159.00	100,185.00	2'-0"	F	SEE DETAIL 2 ON DWG. S-0296
●	211		1997.50	100,104.00	100,185.00	2'-0"	F	SEE DETAIL 2 ON DWG. S-0296
	212							
●	214		1998.00	99,927.00	100,185.00	2'-0"	F	SEE DETAIL 2 ON DWG. S-0296
●	215		1997.50	99,706.00	100,185.00	2'-0"	F	SEE DETAIL 2 ON DWG. S-0296
●	216		1997.50	99,900.00	99,696.00	2'-0"	F	SEE DETAIL 2 ON DWG. S-0296
●	217		2005.25	100,525.00	100,914.00	2'-0"	E	SEE DETAIL 2 ON DWG. S-0296
	218	1995.50	1997.75	100,412.00	99,631.00	2'-0"	E	
●	219	2002.25	2005.25	100,554.00	101,160.00	2'-0"	E	
	220		2005.25	100,500.00	101,490.00	2'-0"	F	
●	221	1995.50	1997.80	100,332.00	100,384.00	2'-0"	D	
●	222	2001.75	2005.00	100,554.00	101,262.34	2'-0"	E	
●	223	1994.70	1998.00	100,545.67	100,885.01	2'-0"	E	
●	224	1991.20	1999.94	99,825.00	100,230.00	4'-0"	A	CLOSED TOP SEE NOTE 7
	225							
	226	1995.50	1997.50	100,631.00	99,791.00	3'-0"	A	
	227	1993.80	1998.00	100,640.00	100,628.50	4'-0"	A	
	228	1992.85	1997.00	100,076.00	100,891.00	4'-0"	A	
	229	1993.08	1996.08	99,639.50	100,389.25	2'-0"	E	
	230	1993.08	1996.08	99,639.50	100,867.75	2'-0"	E	
●	231	1993.68	1997.50	99,559.00	99,887.37	4'-0"	A	
●	232		1997.50	99,698.50	99,696.00	2'-0"	F	SEE DETAIL 2 ON DWG. S-0296
●	233	1993.24	1998.50	99,629.00	99,990.88	4'-0"	A	
	234	1990.72	1994.55	99,626.25	99,538.59	-	SECURITY	BURIED-APPROX. 3' BELOW GRADE. SEE DWG. S-0296.
	235							

NOTES

1. FOR GENERAL NOTES SEE DRAWING S-172.
2. ALL WORK SHOWN ON THIS DRAWING SHALL BE IN ACCORDANCE WITH JOB SPECIFICATION A-3850 UNLESS NOTED.
3. FOR DETAILS OF MANHOLES SEE DRAWINGS S-187, S-191 & S-296.
4. ALL MANHOLE COVERS SHALL BE GRATED UNLESS NOTED ON SCHEDULE.
5. GRATED TOP MANHOLES SHALL BE NEENAH CATALOG #R-2077-C, GRATE TYPE "F" UNLESS NOTED. CLOSED LID TOPS SHALL BE NEENAH CATALOG #R-1077-C, LID TYPE "B" UNLESS NOTED. SEE LEGEND.
6. FOR SECURITY CHOKE POINTS SEE DWG. HC-C0012.
7. FOR RAISING MANHOLE COVERS SEE DWG. C-0M5029.
8. CONCRETE JERSEY BARRIERS OVER MANHOLES, SEE DWG. HC-C0021.

LEGEND

CD TRANSFORMER VAULT DRAIN OR OILY WASTE
D ROOF DRAIN
● MANHOLE COVERS SHALL BE PROVIDED WITH BOLT DOWN FEATURES. SEE DETAIL 12, S-299 SHT. 2. THIS WORK TO BE DONE IN ACCORDANCE WITH JOB SPECIFICATION A-3869.

REFERENCE DRAWINGS

A-0501	SANITARY SEWER AND POTABLE WATER SYSTEM SHEET - 1
A-0501	SANITARY SEWER AND POTABLE WATER SYSTEM SHEET - 2
S-0172	GRADING PLAN - SWITCHYARD AREA
S-0179	PLANS AND SECTIONS - TANK BERMS
S-0186	DRAINAGE PLAN PLANT AREA
S-0187	DRAINAGE DETAILS PLANT AREA
S-0191	MANHOLE AND PIPE DETAILS
S-0192	ADDITIONAL DRAINAGE DETAILS PLANT AREA
S-0199	INTERFACE LOC - ROOF DRAINS, XFMR. VAULT DRAINS AND OILY WASTE
S-0292	PLANT AREA ROADWAY, GRADING AND DRAINAGE PLAN - SHEET 1
S-0293	DETAIL PLANT AREA ROADWAY, WALKWAY, GRADING AND DRAINAGE PLAN - SHEET 2
S-0294	WAREHOUSE AREA ROADWAY, GRADING AND DRAINAGE PLAN - SHEET 3
S-0296	MANHOLE AND PIPE DETAILS
S-0297	PLANT AREA ROADWAY, GRADING AND DRAINAGE
S-0298	PARTIAL GRADING PLANS
S-0299 SHT. 1	DRAINAGE DETAILS AND SECTIONS
S-0299 SHT. 2	SELF HEATING SYSTEM AND SIDEWALK DETAILS
S-0299 SHT. 3	GRADING, ROADWAY AND HANDHOLE DETAILS
2017A-C-0004	DIMENSION PLAN WCNOC PRE-SCREENING STRUCTURE 2017A
2017A-C-0005	GRADING PLAN WCNOC PRE-SCREENING STRUCTURE 2017A

37

USAR FIG. 2.4-3-4A

Digitally signed by Sarah W Swanson
DN: cn=Sarah W Swanson, o=Wolf Creek Nuclear Operating Corp., ou=Sarah W Swanson, email=sswanson@wcnoc.com, c=US
Date: 2010.08.20 14:04:13 -05'00'

⊗ REVISED	INCORPORATED CHG. DOC.	CHANGE 013233 PKG. NO.	
○ ISSUED			
THIS DWG. SUPERSEDED BY	REV.	THIS DWG. SUPERSEDES	REV.
REVISION NOTES: AS-BUILT INFORMATION			

WOLF CREEK NUCLEAR OPERATING CORPORATION

ELECTRONIC APPROVAL

MANHOLE, PIPE & CULVERT SCHEDULE

SCALE	DRAWING NUMBER	SHEET	REV
NONE	S-0189	1	37

34X44 E SIZE

MANHOLE SCHEDULE (CONT.)

NO.	INV. EL.	TOP EL.	LOCATION NORTH COORD.	LOCATION EAST COORD.	DIA.	TYPE	REMARKS
237	1995.30	1999.30	100,500.00	100,018.00	4'-0"	A	
238	1996.00	1999.10	100,168.00	99,830.50	2'-0"	E	DROP CONNECTION; SEE DET. 2 ON DWG.S-0296
239	1994.50	1999.00	99,782.54	99,923.00	4'-0"	A	
240	1996.50	1999.00	99,782.00	100,049.00	4'-0"	A	
242	1993.83	1998.34	100,060.00	100,223.00	2'-0"	E	SEE DETAIL 2 ON DWG. S-0296
243	1995.75	1998.00	99,977.00	100,342.00	2'-0"	E	DROP CONNECTION; SEE DETAIL ON DWG. S-0296
244	1995.75	1998.00	100,010.00	100,341.00	2'-0"	E	DROP CONNECTION
245	1995.35	1998.00	99,991.00	100,230.00	2'-0"	E	SEE DETAIL 2 ON DWG. S-0296
246	1995.00	1998.40	100,136.00	100,388.00	4'-0"	A	PROVIDE OPENINGS FOR SUBBASE DRAINS
247		1998.00	100,210.83	100,185.00	2'-0"	F	SEE DETAIL ON DWG. S-0296
248		1997.60	100,260.00	100,185.00	2'-0"	F	SEE DETAIL ON DWG. S-0296
249	1995.00	1997.00	99,881.95	99,537.00	2'-0"	E	ABANDONED AND PLUGGED
250	1992.00	1998.25	100,000.00	101,486.00	4'-0"	A	SEE MANHOLE 250 DETAIL ON DRAWING S-0296
251		1998.00	100,012.00	101,372.00	2'-0"	F	
252	1993.37	1997.25	99,935.50	101,268.00	4'-0"	A	
253	1988.65	1998.32	99,509.00	100,645.00	4'-0"	C	
254	1995.35	1997.00	99,509.00	100,765.50	2'-0"	E	
255	1995.45	1997.00	99,509.00	100,515.50	2'-0"	E	
256	1992.92	1998.00	100,283.00	100,342.12	2'-0"	E	SEE DETAIL 2 ON DWG. S-0296
257	1992.20	1997.00	99,526.00	99,540.00	4'-0"	A	
258	1993.00	1996.00	99,530.00	99,463.00	2'-0"		SEE DETAIL NO: 17 ON DWG. S-0299 SHT. 2 FOR TYPE M.H.
259	1994.16	1998.33	99,834.11	100,230.67	2'-0"	E	
260	1995.71	1997.97	100,021.31	100,916.94	4'-0"	A	
261	1994.34	1996.50	99,425.00	99,495.00	2'-0"	E	SEE DETAIL 2 ON DWG. S-0296
262	1995.10	1998.00	99,444.00	99,586.00	2'-0"	E	
263	1994.95	1997.56	99,442.70	99,645.59	2'-0"	E	
264	2003.30	2006.89	100,711.50	100,420.10	2'-0"	E	
265	2000.08	*	100,118.00	101,392.00	3'-0"	*	* SEE DETAIL 5 ON DWG. C-0M5029
267	1994.60	1998.50	99,945.00	100,091.00	4'-0"	H	NEENAH FRAME & COVER CAT. NO. R-2565-G
268	1995.55	1998.00	100,720.00	99,620.00	3'-0"	G	SEE DETAIL 1 ON DWG. C-0M2201
271	1992.23	1998.00	100,339.50	100,497.14	5'-0"		SEE C-K217
272	1991.69	1998.68	100,267.00	100,498.00	5'-0" SQ.		SEE DETAIL 3 ON DWG. S-0296
273	1991.47	1998.85	100,267.00	100,668.00	5'-0" SQ.		SEE DETAIL 3 ON DWG. S-0296
274	1991.23	1998.60	100,082.00	100,668.00	5'-0" SQ.		SEE DETAIL 3 ON DWG. S-0296
275	1990.99	1998.85	100,025.00	100,496.00	5'-0" SQ.		SEE DETAIL 3 ON DWG. S-0296
276	1993.25	1996.75	100,074.67	99,377.33	5'-0"	A	SEE DETAIL ON DWG. S-0296
278	1989.50	1999.00	99,558.85	101,858.29	4'-0"		SEE MANHOLE 278 DETAIL ON DWG. S-0296 SHEET 2
279	1989.42	1994.00	99,090.59	101,853.33	4'-0"		SEE MANHOLE 279 DETAIL ON DWG. S-0296 SHEET 2
280	1985.00	1991.00	98,999.00	101,588.01	4'-0"		SEE MANHOLE 280 DETAIL ON DWG. S-0296 SHEET 2
281	1989.75	1999.00	99,632.06	101,861.11	4'-0"		SEE MANHOLE 281 DETAIL ON DWG. S-0296 SHEET 2
282	1990.55	1994.38	99,612.51	99,595.15	-	SECURITY	BURIED-APPROX. 4' BELOW GRADE SEE DWG S-0296
283	1991.39	1995.22	99,497.92	99,536.22	-	SECURITY	BURIED-APPROX. 3' BELOW GRADE SEE DWG. S-0296
284	1991.75	1995.58	99,499.84	99,592.75	-	SECURITY	BURIED-APPROX. 3' BELOW GRADE SEE DWG. S-0296

MANHOLE SCHEDULE (CONT.)

NO.	INV. EL.	TOP EL.	LOCATION NORTH COORD.	LOCATION EAST COORD.	DIA.	TYPE	REMARKS

"CW" VENT MANHOLE SCHEDULE

NO.	TOP/FDN ELEV.	TOP/M.H. ELEV.	LOCATION NORTH COORD.	LOCATION EAST COORD.	DIA.	TYPE	REMARKS
CW-1	1996.08	1999.58	100,603.00	100,100.00	4'-0"	A	
CW-2	1995.50	1999.00	100,032.74	100,149.42	4'-0"	A	
CW-3	1994.92	1998.42	99,573.67	100,136.42	4'-0"	A	
CW-4	1992.33	1995.83	99,169.90	100,162.28	4'-0"	A	
CW-5	1992.50	1996.00	99,100.00	100,668.67	4'-0"	A	

SANITARY SEWER MANHOLE SCHEDULE

NO.	INV. EL.	TOP EL.	LOCATION NORTH COORD.	LOCATION EAST COORD.	DIA.	TYPE	REMARKS
2	1988.50	1996.72	100,806.80	99,286.50	4'-0"		
3	1993.00	1998.33	100,680.00	99,516.43	4'-0"		
4	1989.37	2001.91	100,696.00	100,050.00	4'-0"		
5	1997.16 INLET 1991.61 OUTLET	2006.07	100,696.00	100,410.00	4'-0"		DROP MANHOLE
6	1997.80	1999.30	100,610.00	100,555.00	4'-0"		
7	1992.81	1998.41	100,440.00	100,410.00	4'-0"		
9	1998.54	2002.30	100,610.00	100,736.00	4'-0"		
10	1999.82	2005.75	100,615.00	100,926.00	4'-0"		
11	1994.58	2003.14	100,095.00	100,930.00	4'-0"		
12	1995.93	2003.14	100,095.00	101,200.00	4'-0"		
WET WELL #1	1987.35 1992.22	1998.23	100,696.00	99,630.00	9'-0"		DROP MANHOLE
WET WELL #2	1991.72 1992.61	1998.3	100,265.00	100,480.00	6'-0"		BY OTHERS
WET WELL #3	1991.97 1995.81	1999.0	99,786.28	100,964.48	5'-0"		SEE C-K216 FOR DETAILS
17	1994.50	1998.31	100,125.00	99,630.00	4'-0"		
18	1993.28	1997.75	100,430.00	99,630.00	4'-0"		
19	2000.60	2006.13	100,351.00	100,930.00	4'-0"		
20	2000.16	2005.75	100,615.00	101,011.00	4'-0"		DROP MANHOLE
23	2001.67	2005.75	100,615.00	101,070.17	4'-0"		DROP MANHOLE
24	1995.80	1998.41	99,948.00	100,386.00	3'-0"		CONICAL SOLID COVER MANHOLE BY OTHERS
25	2000.80 INLET 2000.13 OUTLET	2004.5'	101,253.91	99,729.16	4'-0"	A	MANHOLE A-502 SHT. 2 (NOTE 7)
26	1999.26 INLET 1999.16 OUTLET	2004.5'	101,195.24	99,789.00	4'-0"	A	MANHOLE A-502 SHT. 2 (NOTE 7)
27	1997.13 INLET 1995.50 OUTLET	2004.5'	101,000.00	99,789.00	4'-0"	B	DROP MANHOLE A-502 SHT. 2 (NOTE 7)
28	1993.10	1998.90	100,339.32	100,409.05	3'-0"		
29	1995.08	1999.50	100,339.79	100,649.63	3'-0"		
30	1995.96	1999.80	100,432.21	100,649.50	3'-0"		
31	1993.06	1999.00	99,786.22	101,236.51	3'-0"	A	
32	1995.75 INLET 1993.5 OUTLET	1998.7	99,995.4945	100,406.8745	6'-0"		BY OTHERS
33	1993.3 INLET 1993.2 OUTLET	1999.04	100,029.00	100,370.00	6'-0"		BY OTHERS
34	1992.66	1998.8	100,177.00	100,370.00	6'-0"		BY OTHERS
35	1992.25 INLET 1992.15 OUTLET	1998.9	100,265.00	100,370.00	6'-0"		BY OTHERS
36	1993.89	1998.95	100,329.5	100,480.00	6'-0"		BY OTHERS

VALVE VAULT MANHOLE SCHEDULE

NO.	TOP/FDN ELEV.	TOP/M.H. ELEV.	LOCATION NORTH COORD.	LOCATION EAST COORD.	DIA.	TYPE	REMARKS
WT-1	1990'-10 3/4"	1996'-0"	100,786.69	99,138.65	6'-0"	C	SEE DWG.S-0192

NOTES

1. SEE NOTES ON DRAWING S-189 SHT. 1
2. ALL SEWAGE TREATMENT MANHOLES SHALL BE PER SPEC. A-3052 BY MISC. SITE WORK CONTRACTOR.
3. ALL SEWAGE TREATMENT MANHOLES SHALL BE FURNISHED WITH CLOSED LID TOPS, NEENAH CATALOG #1077-C, LID TYPE "D".
4. FOR PLAN LOCATION OF SANITARY SEWER MANHOLES SEE DWG. A-501.
5. ALL "CW" VENT MANHOLES SHALL BE FURNISHED WITH CLOSED TOPS. FOR TYPE "A" MANHOLES SEE DWG. S-187. FOR "CW" TYPE "A" MANHOLE FOUNDATION WITH EMBEDDED PLATES AND SLEEVES, SEE DETAIL "D" ON DWG. S-192 SHT 1. FOR "CW" VENT MANHOLE PLAN LOCATIONS SEE DWGS. M-54, M-55, M-74 & M-76.
6. FOR SECURITY CHOKE POINTS SEE DWG. HC-C0012.
7. MANHOLE SOLID COVER LID TOPS SHALL BE NEENAH CAT. NO. R-1415, LID TYPE "D"

LEGEND

FOR LEGEND, SEE DRAWING S-0189 SHT. 1.

REFERENCE DRAWINGS

A-0501	SANITARY SEWER AND POTABLE WATER SYSTEM SHT. 1
A-0502	SANITARY SEWER AND POTABLE WATER SYSTEM SHT. 2
S-0172	GRADING PLAN - SWITCHYARD AREA
S-0179	PLANS AND SECTIONS - TANK BERMS
S-0186	DRAINAGE PLAN PLANT AREA
S-0187	DRAINAGE DETAILS PLANT AREA
S-0191	MANHOLE AND PIPE DETAILS
S-0192	ADDITIONAL DRAINAGE DETAILS PLANT AREA
S-0199	INTERFACE LOC - ROOF DRAINS, XFMR. VAULT DRAINS AND OILY WASTE
S-0292	PLANT AREA ROADWAY, GRADING AND DRAINAGE PLAN SHEET 1
S-0293	DETAIL PLANT AREA ROADWAY, WALKWAY, GRADING AND DRAINAGE PLAN - SHEET 2
S-0294	WAREHOUSE AREA ROADWAY, GRADING AND DRAINAGE PLAN - SHEET 3
S-0296 SHT.1&2	MANHOLE AND PIPE DETAILS
S-0297	PLANT AREA ROADWAY, GRADING AND DRAINAGE
S-0298	PARTIAL GRADING PLANS
S-0299 SHT. 1	DRAINAGE DETAILS AND SECTIONS
S-0299 SHT. 2	SELF HEATING SYSTEM AND SIDEWALK DETAILS
S-0299 SHT. 3	GRADING, ROADWAY AND HANDHOLD DETAILS

12 USAR FIG. 2.4-3-4B

REVISED / ISSUED — INCORPORATED CHG. DOC. — CHANGE PKG. NO.

THIS DWG. SUPERSEDED BY — REV. — THIS DWG. SUPERSEDES — REV.

REVISION NOTES: ADDED USAR FIGURE NUMBER

WOLF CREEK NUCLEAR OPERATING CORPORATION

ELECTRONIC APPROVAL

Key S. Smith
Released by Document Services. Release Date: 2010.05.04 15:58:55 -05'00'

MANHOLE, PIPE & CULVERT SCHEDULE

SCALE	DRAWING NUMBER	SHEET	REV
NONE	S-0189	2	12

34X44 E SIZE

PIPE SCHEDULE

NO.	SIZE & TYPE	GAGE	FROM MANHOLE	TO MANHOLE	INVERT EL. H.P.	INVERT EL. L.P.	REMARKS
P1	18" DIA. CMP	16	103	2	1993.33	1992.70	
P2	24" DIA. CMP	14	2	105	1992.70	1992.38	
P3	42" DIA. CMP	12	3	84	1991.61	1991.48	
P4	48" DIA. CMP	10	4	87	1990.88	1990.59	
P5	12" DIA. CMP	16	5	12	1994.25	1993.10	
P6	48" DIA. CMP	10	6	126	1989.48	1988.58	
P7	54" DIA. CMP	8	126	HEADWALL	1988.58	1988.50	
P8	54" DIA. RCP	8	HEADWALL	OIL SEP.	1988.50	1987.65	
P9	54" DIA. CMP	8	7	TO OUTLET	1987.18	1987.00	END COORD. N99,094.00 E 99,958.00
P10	18" DIA. CMP	16	8	160			ABDN. 124' OF PIPE FROM M.H. NO. 8, DET. 28 S-0299-3
P11	30" DIA. CMP	14	9	92	1991.94	1991.61	
P12	42" DIA. CMP	12	10	81	1990.98	1990.91	
P13	21" DIA. CMP	16	11	12	1993.50	1993.10	
P14	30" DIA. CMP	14	13	14	1995.50	1995.00	
P15	36" DIA. CMP	12	14	15	1995.00	1993.05	
P16	36" DIA. CMP	12	15	16	1993.05	1992.10	
P17	42" DIA. CMP	12	16	17	1992.10	1991.05	
P18	48" DIA. CMP	10	17	101	1991.05	1990.40	
P19	54" DIA. CMP	8	18	129	1989.90	1989.60	
P20	54" DIA. CMP	8	19	TO OUTLET	1988.85	1987.30	END COORD. N 100,085.00 E 101,902.50
P21	15" DIA. CMP	16	121	100	1995.00	1994.60	
P22	24" DIA. CMP	14	21	14	2001.30	1999.95	
P23	30" DIA. CMP	14	22	23	2005.00	2000.40	
P24	36" DIA. CMP	12	23	24	2000.40	1999.60	
P25	42" DIA. CMP	12	24	25	1999.40	1996.70	
P26	42" DIA. CMP	12	25	18	1991.20	1989.90	
P27	18" DIA. CMP	16	26	19	1991.50	1988.85	
P28	54" DIA. CMP	8	27	19	1989.10	1988.85	
P29	30" DIA. CMP	14	28	29	1994.50	1993.28	
P30	36" DIA. CMP	12	29	30	1992.78	1991.45	
P31	42" DIA. CMP	12	30	31	1990.95	1990.10	
P32	42" DIA. CMP	12	31	19	1990.10	1988.85	
P33	15" DIA. CMP	16	32	30	1994.75	1993.20	
P34	24" DIA. CMP	14	33	34	1994.50	1992.82	
P35	36" DIA. CMP	12	34	101	1992.57	1990.40	
P36	12" DIA. CMP	16	35	31	1991.00	1990.10	
P37	8" DIA. PCMP	16	36	130	1993.90	1992.25	
P38	10" DIA. PCMP	16	130	35	1992.25	1991.00	
P39	21" DIA. CMP	16	37	22	2007.00	2005.00	
P40	18" DIA. CMP	16	38	55	1995.00	1992.60	
P41	54" DIA. RCP	8	OIL SEP.	7	1987.50	1987.18	
P42	36" DIA. CMP	12	40	169	1994.10	1993.28	
P43	36" DIA. CMP	12	41	42	1993.00	1992.70	
P44	36" DIA. CMP	12	42	43	1992.70	1992.30	
P45	42" DIA. CMP	12	43	272	1992.30	1991.69	
P47	42" DIA. CMP	12	45	46	1990.85	1990.75	
P48	48" DIA. CMP	10	46	82	1990.75	1990.30	
P49	48" DIA. CMP	10	82	47	1990.30	1989.75	
P50	48" DIA. CMP	10	47	48	1989.75	1989.15	
P51	54" DIA. CMP	8	49	TO OUTLET	1988.33	1987.00	SEE DET. 37 N99,087.00 END CORRD. E100,645.50
P52	21" DIA. CMP	16	50	51	1994.50	1993.50	
P53	30" DIA. CMP	14	51	52	1993.00	1992.57	
P54	36" DIA. CMP	12	52	131	1992.50	1991.50	
P55	42" DIA. CMP	12	131	132	1991.50	1990.30	
P56	42" DIA. CMP	12	132	48	1990.30	1989.60	
P57	18" DIA. CMP	16	146	147	1993.00	1991.03	
P58	18" DIA. CMP	16	147	234	1990.90	1990.72	
P59	30" DIA. CMP	14	55	56	1992.60	1991.50	
P60	36" DIA. CMP	12	56	57	1991.50	1990.40	
P61	42" DIA. CMP	12	136	58	1989.30	1988.40	
P62	48" DIA. CMP	10	58	59	1988.40	1988.25	
P63	48" DIA. CMP	10	59	TO OUTLET	1988.25	1988.00	END CORRD. N 100,733.00 E 99,027.00
P64	21" DIA. CMP	16	60	61	1992.65	1991.45	
P65	30" DIA. CMP	14	61	58	1990.70	1989.50	
P66	21" DIA. CMP	16	64	68	1992.20	1991.82	
P67	12" DIA. CMP	16	152	31	1991.50	1991.25	
P68	48" DIA. CMP	10	143	54	1989.83	1989.50	
P69	8" DIA. PCMP	16	65	59	1993.80	1991.00	
P70	15" DIA. CMP	16	66	67	1995.50	1993.80	
P71	21" DIA. CMP	16	67	64	1993.80	1992.20	
P72	21" DIA. CMP	16	283	69	1991.39	1990.89	
P73	24" DIA. CMP	14	69	70	1990.64	1989.94	
P74	36" DIA. CMP	12	70	71	1989.34	1989.10	
P75	48" DIA. CMP	10	71	72	1988.85	1988.46	
P76	48" DIA. CMP	10	72	TO OUTLET	1988.46	1988.00	END COORD. N 99,400.00 E 98,975.00
P77	24" DIA. CMP	14	73	74	1992.40	1991.10	
P78	36" DIA. CMP	12	74	70	1990.60	1989.34	
P79	8" DIA. PCMP	16	75	76	1993.75	1991.89	

PIPE SCHEDULE (CONT.)

NO.	SIZE & TYPE	GAGE	FROM MANHOLE	TO MANHOLE	INVERT EL. H.P.	INVERT EL. L.P.	REMARKS
P80	10" DIA. PCMP	16	76	71	1991.89	1988.85	
P81	8" DIA. PCMP	16	77	71	1992.75	1991.75	
P82	8" DIA. PCMP	16	78	79	1994.40	1993.40	
P83	10" DIA. PCMP	16	79	80	1993.40	1992.32	
P84	12" DIA. PCMP	16	80	152	1992.32	1991.70	
P85	15" DIA. CMP	16	142	144	1994.25	1993.77	
P86	21" DIA. CMP	16	20	21	2005.00	2001.30	
P87	30" DIA. CMP	14	144	128	1990.30	1990.00	
P88	48" DIA. CMP	10	81	134	1990.91	1990.22	
P89	18" DIA. CMP	16	145	24	2001.00	2000.50	
P90	48" DIA. CMP	10	101	18	1990.40	1989.90	
P91	8" DIA. CMP	16	MAIN XFMR VAULT SUMP	176	1993.95	1993.90	CONN. TO MAIN XFMR VAULT SUMP - SEE NOTE NO. 4
P92	12" DIA. CMP	16	163	86	1993.70	1993.00	
P93	36" DIA. CMP	12	169	41	1993.28	1993.00	
P94	30" DIA. CMP	14	105	83	1992.38	1991.80	
P95	42" DIA. CMP	12	83	3	1991.80	1991.61	
P96	48" DIA. CMP	10	84	85	1991.48	1991.38	
P97	18" DIA. CMP	16	160	89	1993.54	1993.43	
P98	48" DIA. CMP	10	85	4	1991.38	1990.88	
P99	48" DIA. CMP	10	87	135	1990.59	1990.23	
P100	21" DIA. CMP	16	89	153	1993.43	1993.05	
P101	24" DIA. CMP	14	90	137	1992.95	1992.57	
P102	24" DIA. CMP	14	91	53	1992.25	1992.04	
P103	36" DIA. CMP	12	92	93	1991.61	1991.28	
P104	42" DIA. CMP	12	93	94	1991.28	1991.25	
P105	42" DIA. CMP	12	94	10	1991.25	1990.98	
P106	30" DIA. CMP	14	12	144	1993.10	1992.90	
P107	18" DIA. CMP	16	159	103	1993.53	1993.33	
P108	12" DIA. CMP	16	1	159	1994.00	1993.50	CONN. TO MAIN XFMR
P109	8" DIA. CMP	16	SPARE MAIN XFMR V. S.	177	1993.85	1993.64	CONN. TO MAIN XFMR
P110	21" DIA. CMP	16	106	107	1993.33	1993.15	
P111	24" DIA. CMP	14	107	108	1993.15	1992.73	
P112	30" DIA. CMP	14	108	109	1992.73	1992.28	
P114	30" DIA. CMP	14	109	111	1992.28	1992.08	
P115	36" DIA. CMP	14	111	83	1992.08	1991.80	
P116	12" DIA. CMP	16	110	109	1993.50	1992.45	
P117	18" DIA. CMP	16	161	162	1993.75	1993.56	
P118	8" DIA. CMP	16	STA. SERVICE XFMR V.S.	113	1993.00	1992.90	CONN. TO STA. SERVICE XFMR VAULT SUMP - SEE NOTE NO. 4
P119	12" DIA. CMP	16	113	111	1992.90	1992.08	
P120	8" DIA. CMP	16	XFMR V. S.	105	1993.25	1992.75	CONN. TO START-UP XFMR SUMP - SEE NOTE NO. 4
P121	8" DIA. CMP	16	E.S.F. XFMR SUMP	115	1992.75	1992.60	CONN. TO E.S.F. XFMR VAULT SUMP - SEE NOTE NO. 4
P122	24" DIA. CMP	14	115	3	1992.60	1992.00	
P123	21" DIA. CMP	16	162	115	1993.56	1992.60	
P124	15" DIA. CMP	16	116	117	1993.39	1993.09	
P125	24" DIA. CMP	14	117	84	1993.09	1991.48	SEE DET. 29, S-0299-3
P126	12" DIA. CMP	16	114	118	1994.25	1993.50	
P127	24" DIA. CMP	14	164	119	1993.15	1993.05	
P128	15" DIA. CMP	16	86	85	1993.00	1992.50	CONN. TO CONTROL BLDG.
P129	21" DIA. CMP	16	118	164	1993.50	1993.15	
P130	24" DIA. CMP	14	119	4	1993.05	1991.60	
P132	6" FIBRECAST	N/A	102	TO OUTLET	1989.33	1988.28	SEE SECT. 'C-C' DWG. S-0179
P133	18" DIA. CMP	16	120	164	1996.60	1993.15	SEE DET. 'N' DWG. S-0191
P134	24" DIA. CMP	14	154	91	1992.36	1992.25	
P135	15" DIA. CMP	16	165	87	1994.00	1992.70	
P136	18" DIA. CMP	16	95	92	1993.75	1993.50	
P139	15" DIA. CMP	16	*	99	1995.00	1994.60	* SINGLE DROP INLET
P140	21" DIA. CMP	16	99	100	1994.50	1993.90	
P141	24" DIA. CMP	14	100	134	1993.80	1991.50	
P142	48" DIA. CMP	10	134	143	1990.22	1989.85	
P143	15" DIA. CMP	16	166	122	1994.00	1993.44	
P144	21" DIA. CMP	16	122	12	1993.44	1993.10	
P145	54" DIA. CMP	8	150	49	1988.56	1988.33	
P147	24" DIA. CMP	14	124	93	1991.50	1991.28	
P148	8" DIA. PCMP	16	167	94	1996.25	1995.75	ABDN. IN PLACE
P149	8" DIA. PCMP	16	168	81	1996.25	1995.50	FROM FUEL BLDG.
P150	8" DIA. PCMP	16	81	82	1996.25	1995.50	
P151	15" DIA. CMP	16	125	155	1993.25	1992.45	
P152	48" DIA. CMP	10	127	6	1989.72	1989.48	
P153	48" DIA. CMP	10	128	126	1988.95	1988.58	
P154	54" DIA. CMP	8	129	27	1989.60	1989.10	
P155	8" DIA. PCMP	16	19	35	1994.13	1993.50	
P157	54" DIA. CMP	8	48	150	1989.15	1988.33	
P158	8" DIA. PCMP	16	94	46	1995.50	1993.65	

PIPE SCHEDULE (CONT.)

NO.	SIZE & TYPE	GAGE	FROM MANHOLE	TO MANHOLE	INVERT EL. H.P.	INVERT EL. L.P.	REMARKS
P160	8" DIA. PCMP	16	46	133	1994.50	1994.00	
P161	12" DIA. CMP	16	133	131	1994.00	1993.25	
P164	8" DIA. PCMP	16	82	131	1994.50	1993.25	
P165	8" DIA. PCMP	16	131	36	1995.40	1993.25	
P166	12" DIA. CMP	16	88	12	1994.25	1993.10	
P167	42" DIA. CMP	12	57	136	1990.40	1989.30	
P168	48" DIA. CMP	10	135	127	1990.23	1989.72	
P169	8" DIA. PCMP	16	138	127	1995.00	1993.60	
P170	8" DIA. PCMP	16	127	128	1995.00	1991.60	
P171	8" DIA. PCMP	16	54	128	1995.50	1995.00	SEE SECT. 'M-M' DWG. S-0186
P172	48" DIA. CMP	10	54	128	1989.50	1988.95	
P173	8" DIA. PCMP	16	139	49	1994.00	1991.80	
P174	8" DIA. PCMP	16	140	141	1995.00	1993.40	
P175	12" DIA. PCMP	16	141	49	1993.10	1991.50	
P178	8" DIA. PCMP	16	173	156	1995.20	1993.71	
P179	8" DIA. PCMP	16	148	149	1995.00	1994.00	
P180	8" DIA. PCMP	16	149	150	1995.00	1994.00	
P181	12" DIA. CMP	16	149	156	1994.00	1993.71	
P182	8" DIA. PCMP	16	170	158	1995.20	1995.00	
P183	8" DIA. PCMP	16	171	158	1995.20	1994.20	
P184	8" DIA. PCMP	16	171	157	1995.20	1994.12	
P185	8" DIA. PCMP	16	172	157	1995.20	1994.12	
P186	8" DIA. PCMP	16	172	156	1995.20	1993.71	
P187	8" DIA. PCMP	16	151	150	1995.00	1994.30	
P188	12" DIA. CMP	16	156	141	1993.71	1993.40	
P189	12" DIA. CMP	16	157	139	1994.12	1994.00	
P190	12" DIA. CMP	16	158	68	1992.00	1991.82	
P191	24" DIA. CMP	14	153	90	1993.05	1992.95	
P192	24" DIA. CMP	14	137	154	1992.57	1992.36	
P193	18" DIA. CMP	16	155	9	1992.45	1992.35	
P194	18" DIA. CMP	16	62	178	1993.90	1993.80	
P195	15" DIA. CMP	16	63	93	1994.00	1993.50	
P196	12" DIA. CMP	16	139	54	1994.80	1994.50	
P197	8" DIA. CMP	16	176	177	1993.90	1993.64	
P197A	30" DIA. CMP	14	53	9	1992.04	1991.94	
P198	18" DIA. CMP	16	177	174	1993.64	1993.19	
P198A	18" DIA. CMP	16	178	154	1993.60	1993.35	
P199	10" DIA. CMP	16	174	175	1993.19	1993.04	
P202	15" DIA. CMP	16	202	153	1993.50	1993.05	
P205	15" DIA. CMP	16	205	206	1995.50	1995.25	
P206	15" DIA. CMP	16	206	53	1995.25	1995.00	
P207	15" DIA. CMP	16	207	53	1995.00	1994.75	
P208	15" DIA. CMP	16	208	137	1995.50	1995.00	
P210	12" DIA. CMP	16	218	105	1995.60	1993.06	
P211	18" DIA. CMP	16	201	160	1993.60	1993.50	
P216	18" DIA. CMP	16	217	P-15	2002.25	2002.00	DROP CONN. SEE DET. NO. 1 DWG. S-0296
P217	15" DIA. CMP	16	219	21	2002.25	2001.50	
P221	15" DIA. CMP	16	221	154	1995.50	1995.00	
P222	18" DIA. CMP	16	222	145	2001.75	2001.00	
P223	18" DIA. CMP	16	223	201	1994.70	1993.60	SEE DET. NO. 28 DWG. S-0299-3
P224	18" DIA. CMP	16	224	10	1991.20	1990.98	
P226	18" DIA. CMP	16	226	38	1995.50	1994.60	
P227	24" DIA. CMP	16	227	42	1993.80	1992.70	
P228	15" DIA. CMP	16	228	16	1992.85	1992.10	
P229	15" DIA. CMP	16	229	47	1993.08	1989.75	
P230	15" DIA. CMP	16	230	132	1993.08	1990.30	
P235							

NOTES

1. SEE NOTES ON DWG. S-189 SHT. 1.
2. ALL CORRUGATIONS SHALL BE 2 2/3" X 1/2", EXCEPT 8" DIA. & 10" DIA. PIPES SHALL HAVE 1 1/2" X 1/4" CORRUGATIONS UNLESS NOTED.
3. PROVIDE 6" OF RIPRAP OVER 6" OF GRAVEL BEDDING AT THE JUNCTION OF TWO DITCHES AT A POINT WHERE SLOPE CHANGES IN A DITCH AND AT END SECTIONS OF PIPES & CULVERTS, OVER A LENGTH OF 15' UPSTREAM & DOWNSTREAM OVER A WIDTH OF 10' AND FOR A HEIGHT OF 2', UNLESS NOTED.
4. PIPES CONNECTING THE XFMR VAULT SUMPS SHALL BE UP TO THE INSIDE FACE OF WALL.
5. ROUTE THE 8" DIA. DRAIN FROM THE TECHNICAL SUPPORT CENTER BLDG. INTO MH #178 AT ELEV. 1994.5' AT THE MANHOLE.

LEGEND

FOR LEGEND, SEE DRAWING S-0189 SHT. 1.

REFERENCE DRAWINGS

A-0501	SANITARY SEWER AND POTABLE WATER SYSTEM SHT. 1
A-0502	SANITARY SEWER AND POTABLE WATER SYSTEM. SHT. 2
S-0172	GRADING PLAN - SWITCHYARD AREA
S-0179	PLANS AND SECTIONS - TANK BERMS
S-0186	DRAINAGE PLAN PLANT AREA
S-0187	DRAINAGE DETAILS PLANT AREA
S-0191	MANHOLE AND PIPE DETAILS
S-0192	ADDITIONAL DRAINAGE DETAILS PLANT AREA
S-0199	INTERFACE LOC - ROOF DRAINS, XFMR VAULT DRAINS AND OILY WASTE
S-0292	PLANT AREA ROADWAY, GRADING AND DRAINAGE PLAN SHEET 1
S-0293	DETAIL PLANT AREA ROADWAY, WALKWAY, GRADING AND DRAINAGE PLAN - SHEET 2
S-0294	WAREHOUSE AREA ROADWAY, GRADING AND DRAINAGE PLAN - SHEET 3
S-0296	MANHOLE AND PIPE DETAILS
S-0297	PLANT AREA ROADWAY, GRADING AND DRAINAGE
S-0298	PARTIAL GRADING PLANS
S-0299 SHT. 1	DRAINAGE DETAILS AND SECTIONS
S-0299 SHT. 2	SELF HEATING SYSTEM AND SIDEWALK DETAILS
S-0299 SHT. 3	GRADING, ROADWAY AND HANDHOLD DETAILS
Z017A-C-0004	DIMENSION PLAN WCNOC PRE-SCREENING STRUCTURE Z017A
Z017A-C-0005	GRADING PLAN WCNOC PRE-SCREENING STRUCTURE Z017A

09

Digitally signed by Sarah W Greenwalt
DN: C=US, O=Burlington, ou=Wolf Creek Nuclear Operating Corporation, cn=Sarah W Greenwalt
Reason: I am the author of this document
Date: 2014.08.20 14:01:57 -05'00'

USAR FIG. 2.4-3-4C

⊗ REVISED ○ ISSUED	INCORPORATED CHG. DOC.	CHANGE PKG. NO.	013233
THIS DWG. SUPERSEDED BY	REV.	THIS DWG. SUPERSEDES	REV.
REVISION NOTES: AS-BUILT INFOMATION			

WOLF CREEK NUCLEAR OPERATING CORPORATION

ELECTRONIC APPROVAL

MANHOLE, PIPE & CULVERT SCHEDULE

SCALE	DRAWING NUMBER	SHEET	REV
NONE	S-0189	3	09

34X44 E SIZE

PIPE SCHEDULE (CONT.)

NO.	SIZE & TYPE	GAGE	FROM MANHOLE	TO MANHOLE	INVERT EL. H.P.	INVERT EL. L.P.	REMARKS
P238	8" DIA. CMP	16	239	166	1994.50	1994.00	
07 P239	6" DIA. CMP	16	240	168	1996.50	1996.25	
P240	8" DIA. CMP	16	237	106	1995.30	1994.33	SEE DET. DWG. S-0299 SHT. 1
P241	12" DIA. CMP	16	246	62	1995.00	1994.75	
P242	18" DIA. CMP	16	249	67	1995.00	1994.39	ABANDONED AND PLUGGED
P243	6" DIA. CMP	16	243	P-158	1995.75	1995.63	DROP CONN. DET. NO. 1 SEE DWG. S-0296
P244	6" DIA. CMP	16	244	P-158	1995.75	1995.63	DROP CONN. DET. NO. 1 SEE DWG. S-0296
P245	18" DIA. SCMP	16	——	250	1996.50	1996.25	SLOTTED DRAIN
P246	18" DIA. CMP	16	250	18	1992.00	1989.50	
P247	15" DIA. CMP	16	254	253	1995.35	1994.15	
P248	15" DIA. CMP	16	255	253	1995.45	1994.15	
P249	12" DIA. CMP	16	238	P-125	1996.00	1993.28	DROP CONN. DET. NO. 1 SEE DWG. S-0296
P250	12" DIA. CMP	16	258	257	1993.00	1992.20	
P251	12" DIA. CMP	16	CATCH BASIN	258	1993.75	1993.00	PROVIDE BEND AT N99,495 / E99,407
P252	12" DIA. CMP	16	259	224	1994.46	1994.16	
P253	12" DIA. CMP	16	257	234	1992.20	1990.72	
P254	10" DIA. CMP	16	260	16	1995.71	1994.47	TEMP. LINE IS TO REMAIN
P255	8" DIA. PCMP	16	——	202	GRADE	1997.83	SURFACE DRAIN
P256	18" DIA. CMP	16	264	169	2003.30	1994.80	
P258	18" DIA. CMP	16	267	124	1994.60	1994.00	
P259	6" DIA. PCMP	16	——	P-260	1997.30	1996.83	
P260	6" DIA. CMP	16	P-259	268	1996.83	1996.79	
P261	12" DIA. CMP	16	268	P-60	1995.55	1993.24	
P262	42" DIA. RCP		272	273	1991.69	1991.47	
P263	42" DIA. RCP		273	274	1991.47	1991.23	
P264	42" DIA. RCP		274	275	1991.23	1990.99	
P265	18" DIA. CHDPE		276	74	1993.75	1992.05	
P266	1½" DIA. PVC		EMH175	276	1995.6	1994.9	EMH175 SUMP DRAIN
P267	8 EA. 10" CMP	16	234	282	1990.72	1990.55	USE ALUMINIZED OR GALVANIZED CMP
P268	18" DIA. CMP	16	282	135	1990.55	1990.23	FORMERLY PARY OF P58
P269	8 EA. 10" CMP	16	284	283	1991.75	1991.39	USE ALUMINIZED OR GALVANIZED CMP
P270	21" DIA. CMP	16	68	284	1991.82	1991.75	FORMERLY PART OF P72

CULVERT SCHEDULE

NO.	GAGE	SIZE & TYPE	LENGTH	SLOPE %	INLET COORD. N.-S.	INLET COORD. E.-W.	INVERT EL.	OUTLET COORD. N.-S.	OUTLET COORD. E.-W.	INVERT EL.	REFER. DWG'S.	RIPRAP LIMITS INLET A	RIPRAP LIMITS INLET B	RIPRAP LIMITS INLET H	RIPRAP LIMITS INLET D	RIPRAP LIMITS OUTLET A	RIPRAP LIMITS OUTLET B	RIPRAP LIMITS OUTLET H	RIPRAP LIMITS OUTLET D	REMARKS
C-1	12	1-42" DIA. CMP		0.44	100,945.00	99,114.95	1992.0	100,945.00	99,035.05	1988.00	S-186	11'-6"		3'-6"		10'-0"	10'-0"	3'-6"		SEE SEC. 'L-L'(S-0187)
C-2	16	1-12" DIA. CMP	54'-0"	0.56	100,822.20	99,153.70	1994.50	100,869.20	99,180.30	1994.20			5'-0"	1'-6"		5'-0"		2'-6"		
C-3	12	1-36" DIA. CMP	56'-0"	0.45	99,999.00	99,763.00	1987.50	99,999.00	99,707.00	1987.25		10'-0"		4'-0"		50'-0"	10'-0"	3'-0"		SEE SEC. 'R-R'(S-0191)
C-4	14	1-30" DIA. CMP	56'-0"	0.36	99,180.00	99,088.00	1989.70	99,180.00	99,032.00	1989.50		10'-0"		3'-0"		10'-0"	10'-0"	2'-6"		
C-5	14	2-24" DIA. CMP		0.46	99,161.88	100,457.00	1990.80	99,093.30	100,457.00	1988.00		10'-0"		3'-0"		10'-0"	10'-0"	2'-0"		3'-0" O.C. SEE SEC. 'H-H'(S-0187)
C-7	14	1-24" DIA. CMP	51'-0"	0.49	100,270.00	102,204.90	1996.25	100,270.00	102,252.80	1996.00		6'-0"		2'-6"		6'-0"	10'-0"	2'-0"		
C-8	14	1-30" DIA. CMP		0.38	100,105.00	101,806.55	1993.00	100,105.00	101,898.75	1988.00		6'-6"		4'-0"		10'-0"	10'-0"			SEE SEC. 'K-K'(S-0191)
C-9	14	1-30" DIA. CMP	52'-0"	0.39	101,012.00	101,813.00	2000.70	101,012.00	101,865.00	2000.50		6'-6"		2'-6"		6'-6"		2'-6"		
C-10	12	1-36" DIA. CMP	58'-0"	0.43	101,088.00	102,091.00	2000.00	101,088.00	102,149.00	1999.75		6'-6"		3'-0"		6'-6"		3'-0"		
C-11	14	1-24" DIA. CMP	66'-0"	0.45	101,322.00	101,684.00	1992.80	101,388.00	101,684.00	1992.50			5'-0"	2'-6"		7'-0"		3'-0"		
C-12	16	1-18" DIA. CMP	68'-0"	0.44	101,321.00	101,736.00	1992.50	101,389.00	101,736.00	1992.20			5'-0"	2'-0"		7'-0"		3'-0"		
C-13	12	1-36" DIA. CMP	46'-0"	0.70	101,391.00	101,687.00	1992.50	101,391.00	101,733.00	1992.20		6'-6"	10'-0"	3'-0"		6'-6"	10'-0"	3'-0"		
C-14	16	1-18" DIA. CMP	52'-0"	0.40	101,400.00	101,389.00	2011.20	101,400.00	104, 440.00	2011.00		6'-0"	5'-0"	2'-0"		6'-0"	5'-0"	2'-0"		
C-15	14	1-24" DIA. CMP	78'-0"	0.32	100,978.00	102,086.00	1999.75	101,007.00	102,150.00	1999.50		6'-0"		2'-0"		6'-0"		2'-6"		
C-16	16	1-18" DIA. CMP	50'-0"	0.50	100,270.00	101,814.00	1996.50	100,270.00	101,864.00	1996.25		6'-0"		2'-0"		6'-0"		2'-0"		
C-18	16	1-12" DIA. CMP	44'-0"	0.91	100,666.50	101,482.80	2004.60	100,623.50	101,492.80	2004.2			3'-0"	1'-6"			3'-6"	1'-6"		
C-19	16	1-30" DIA. CMP	61'-0"	0.57	100,214.70	101,743.90	1993.80	100,164.50	101,778.50	1993.50	S-186	6'-6"	5'-0"	2'-6"		6'-6"	10'-0"	2'-6"		
C-20	14	1-12" DIA. CMP	151'-0"	0.3	101,126.00	100,172.83	2005.40	100,975.00	100,172.83	2000.50	S-186	5'-0"	5'-0"	2'-6"		5'-0"	5'-0"	2'-6"		8" DIA. CMP INLET @ N101,054.00 & E100,172.83; 1/4" STL GRATE EL 2006.60
C-21	16	1-12" DIA. CMP	20'-0"	1.25	100,834.14	99,923.33	1997.11	100,820.80	99,908.31	1996.86	S-186									
C-22	16	1-12" DIA. CMP	20'-0"	2.05	100,832.99	99,924.41	1997.20	100,819.72	99,909.44	1996.79	S-186									

NOTES

1. SEE NOTES ON DWG. S-189 SHT. 1.
2. ALL CORRUGATIONS SHALL BE 2 2/3" X 1/2". EXCEPT 8"DIA. & 10"DIA. PIPES SHALL HAVE 1 1/2" X 1/4" CORRUGATIONS, UNLESS NOTED.
3. PROVDE 6" OF RIPRAP OVER 6" OF GRAVEL BEDDING AT THE JUNCTION OF TWO DITCHES AT A POINT WHERE SLOPE CHANGES IN A DITCH AND AT END SECTIONS OF PIPES & CULVERTS, OVER A LENGHT OF 15' UPSTREAM & DOWNSTREAM OVER A WIDTH OF 10' AND FOR A HEIGHT OF 2',UNLESS NOTED.
   PIPES CONNECTING THE XFMR VAULT SUMPS SHALL BE UP TO THE INSIDE FACE OF WALL.

LEGEND

FOR LEGEND, SEE DRAWING S-0189 SHT. 1.

REFERENCE DRAWINGS

A-0501	SANITARY SEWER AND POTABLE WATER SYSTEM SHT. 1
A-0502	SANITARY SEWER AND PORTABLE WATER SYSTEM SHT. 2
S-0172	GRADING PLAN - SWITCHYARD AREA.
S-0179	PLANS AND SECTIONS - TANK BERMS.
S-0186	DRAINAGE PLAN PLANT AREA.
S-0187	DRAINAGE DETAILS PLANT AREA.
S-0191	MANHOLE AND PIPE DETAILS.
S-0192	ADDITIONAL DRAINAGE DETAILS PLANT AREA.
S-0199	INTERFACE LOC. - ROOF DRAINS, XFMR VAULT DRAINS AND OILY WASTE.
S-0292	PLANT AREA ROADWAY, GRADING AND DRAINAGE PLAN SHEET 1.
S-0293	DETAIL PLANT AREA ROADWAY, WALKWAY, GRADING AND DRAINAGE PLAN - SHEET 2.
S-0294	WAREHOUSE AREA ROADWAY, GRADING AND DRAINAGE PLAN - SHEET 3.
S-0296	MANHOLE AND PIPE DETAILS.
S-0297	PLANT AREA ROADWAY, GRADING AND DRAINAGE.
S-0298	PARTIAL GRADING PLANS.
S-0299 SHT. 1	DRAINAGE DETAILS AND SECTIONS.
S-0299 SHT. 2	SELF HEATING SYSTEM AND SIDEWALK DETAILS.
S-0299 SHT. 3	GRADING, ROADWAY AND HANDHOLD DETAILS.
S-0573	SBO DIESEL GENERATOR GRADING & DRAINAGE PLAN

07 USAR FIG. 2.4-3-4D

REVISED / ISSUED — INCORPORATED CHG. DOC. CR* 00100750 — CHANGE PKG. NO.

THIS DWG. SUPERSEDED BY — REV. — THIS DWG. SUPERSEDES — REV.

REVISION NOTES: REVISED PIPE P239. ADDED USAR FIGURE NUMBER

WOLF CREEK NUCLEAR OPERATING CORPORATION — ELECTRONIC APPROVAL

Kay E. Smith
Released by Document Services. Release Date: 2016.04.07 08:47:11 -05'00'

MANHOLE, PIPE & CULVERT SCHEDULE

SCALE	DRAWING NUMBER	SHEET	REV
NONE	S-0189	4	07

34X44 E SIZE

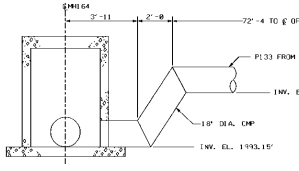

DETAIL N / S-186
N.T.S.

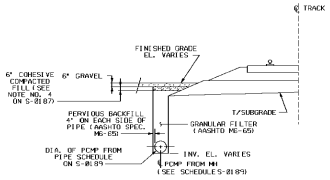

TYPICAL SUBGRADE DRAINAGE
N.T.S.
(S-0189 & S-0190)

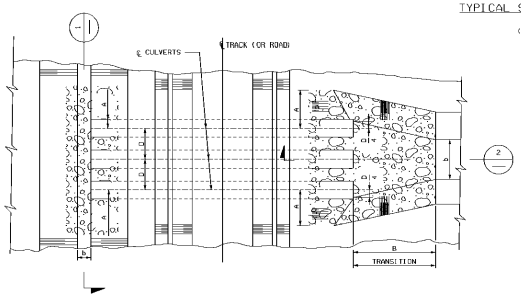

TYPICAL PLAN OF CULVERT END PROTECTION
N.T.S.

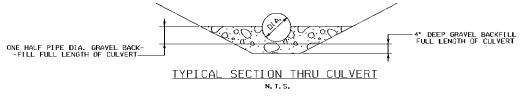

TYPICAL SECTION THRU CULVERT
N.T.S.

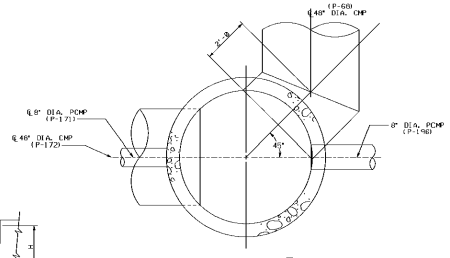

DETAIL B / S-186
N.T.S.

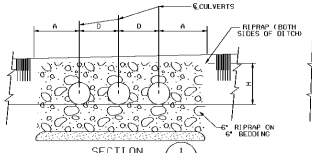

SECTION 1
N.T.S.
TYPICAL SECTION WITH DITCH PERPENDICULAR TO CULVERT

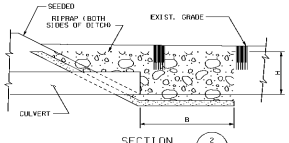

SECTION 2
N.T.S.
TYPICAL SECTION WITH DITCH PARALLEL TO CULVERT

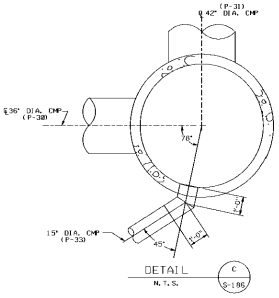

DETAIL C / S-186
N.T.S.

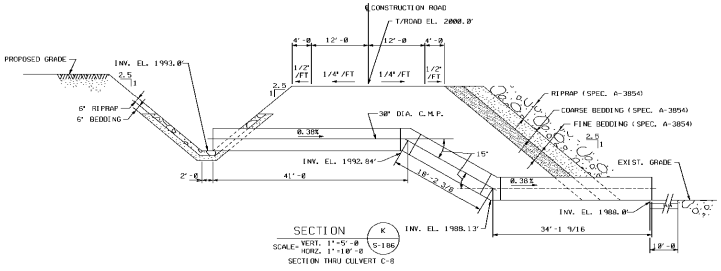

SECTION K / S-186
SCALE: VERT. 1"=5'-0 HORZ. 1"=10'-0
SECTION THRU CULVERT C-8

LEGEND

M.H. = MANHOLE
XFMR = TRANSFORMER
V.S. = VAULT SUMP

GENERAL NOTES

1. FOR GENERAL NOTES SEE DRAWING S-172.
2. ALL WORK SHOWN ON THIS DRAWING SHALL BE IN ACCORDANCE WITH JOB SPECIFICATION A-3850 UNLESS NOTED.

REFERENCE DRAWINGS

S-0172	GRADING PLAN - SWITCHYARD AREA
S-0186	DRAINAGE PLAN - PLANT AREA
S-0187	DRAINAGE DETAILS - PLANT AREA
S-0189	MANHOLE, PIPE & CULVERT SCHEDULE
S-0199	INTERFACE LOCATIONS - ROOF DRAINS, TRANSFORMER VAULT DRAINS, & OILY WASTE

USAR FIG. 2.4-3-05

26

⊗ REVISED ○ ISSUED	INCORPORATED CHG. DOC.		CHANGE PKG. NO.
THIS DWG. SUPERSEDES	REV.	THIS DWG. SUPERSEDED	REV.
REVISION NOTES	REVISED PER PIR 2003-0845		

WOLF CREEK NUCLEAR OPERATING CORPORATION

ELECTRONIC APPROVAL

WOLF CREEK GENERATING STATION
MANHOLE AND PIPE DETAILS

SCALE	DRAWING NUMBER	SHEET	REV
AS SHOWN	S-0191		26

34044 E SEE

THIS DRAWING AND THE DESIGN IT COVERS IS THE PROPERTY OF THE UTILITIES WHICH ARE PARTICIPATING IN THE SHIPPS PROJECT IT IS LOANED ON THE BORROWER'S EXPRESS AGREEMENT THAT IT WILL NOT BE REPRODUCED, COPIED, LOANED, EXHIBITED, OR USED EXCEPT IN THE LIMITED WAY AND PRIVATE USE PERMITTED BY WRITTEN CONSENT GIVEN BY THE SHIPPS UTILITIES TO THE BORROWER.

Released by Document Services Release Date: 01/15/04

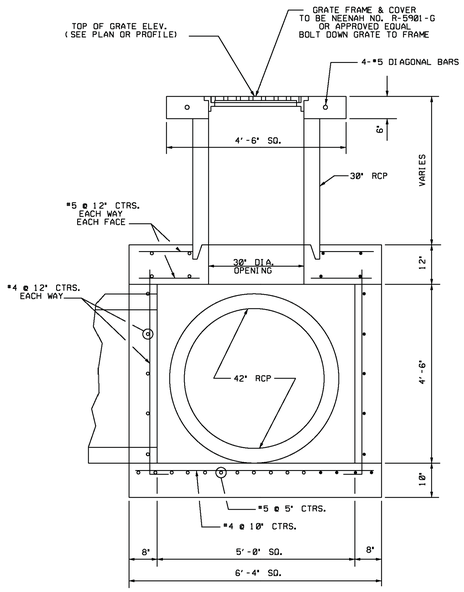

SECTION A-A

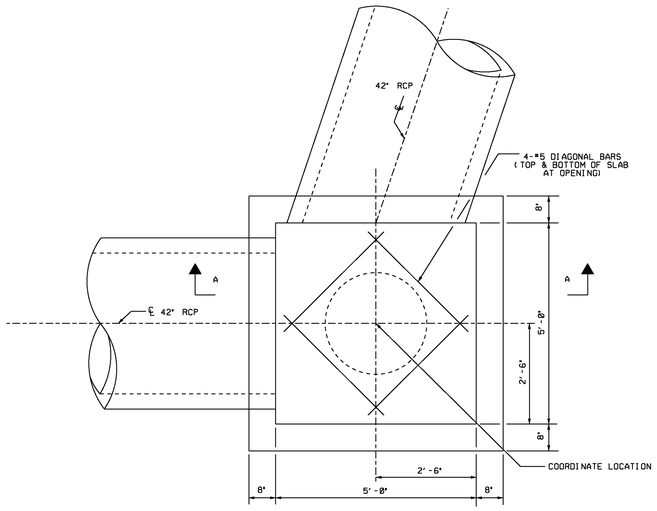

PLAN

DETAIL 3
REINFORCED CONRETE BOX
N.T.S.

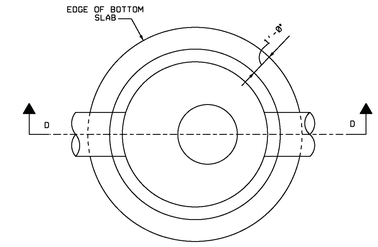

PLAN
N.T.S

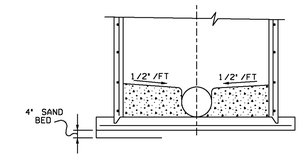

SECTION E
N.T.S

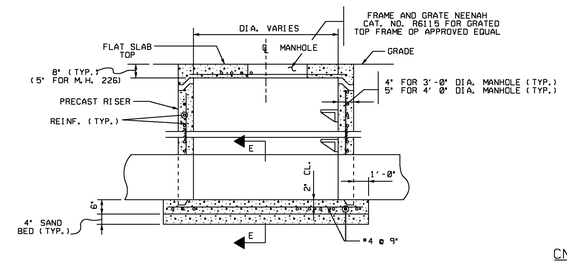

SECTION D
MANHOLE TYPE "A"
N.T.S.

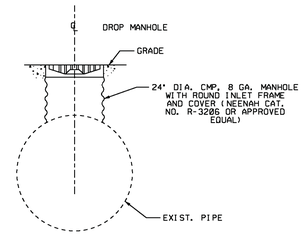

CMP DROP MANHOLE TYPE "F"
N.T.S

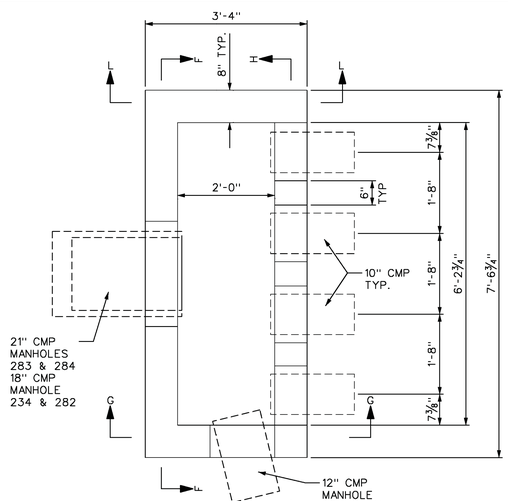

SECURITY SITE
DRAINAGE MANHOLE PLAN
MANHOLES 234, 282, 283, AND 284

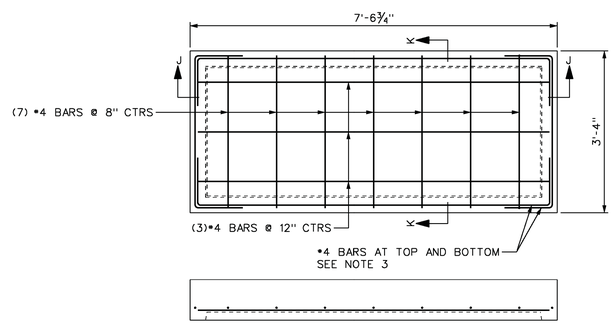

SECTION J-J

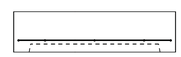

SECTION K-K

MANHOLE VAULT
LID REINFORCEMENT PLAN

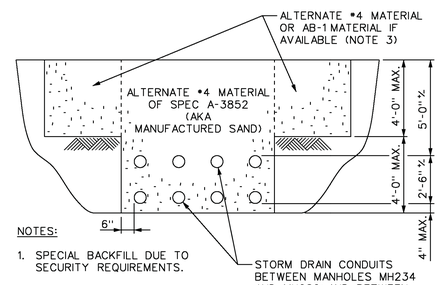

NOTES:

1. SPECIAL BACKFILL DUE TO SECURITY REQUIREMENTS.
2. BACKFILL WITH MATERIALS INDICATED AND IN ACCORDANCE WITH SPEC. A-3852.
3. CLEAN MATERIAL EXCAVATED FROM THE LOCATIONS MAY BE USED IN THESE AREAS ALSO.

BACKFILL FOR STORM DRAIN CONDUITS
MANHOLES 234, 282, 283, AND 284

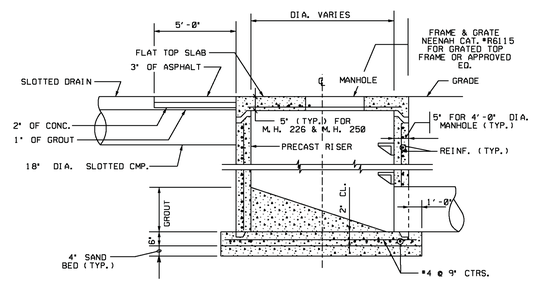

MANHOLE 250
N.T.S.

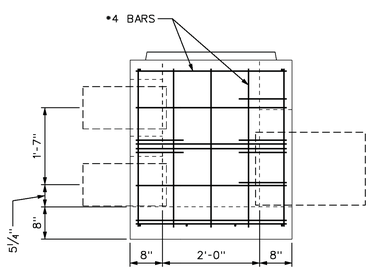

SECTION L-L

GENERAL NOTES
1. ALL REBAR SHALL BE #4 BARS
2. 3" CLEARENCE TYP.
3. ALL REBAR SHALL BE FIELD BEND
4. ALL REBAR SHALL BE GRADE 60
5. ALL CONCRETE SHALL BE 4000 PSI, 28 DAY COMPRESIVE STRENGTH

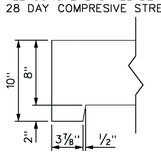

DETAIL 4
KEY WAY DETAIL

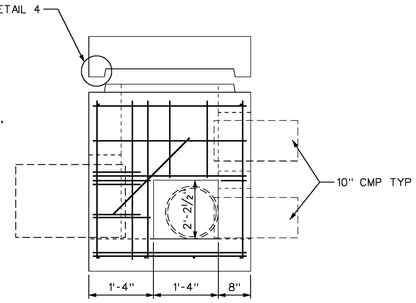

SECTION G-G
MANHOLE 234 ONLY

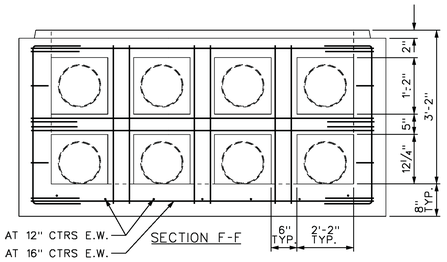

SECTION F-F

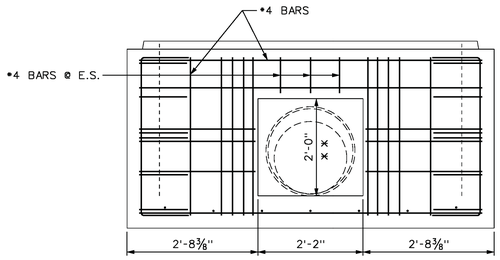

SECTION H-H

* * HOLE MAY BE OFFSET FROM MIDDLE.

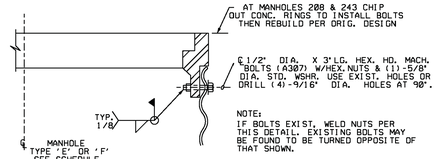

DETAIL 2
N.T.S.

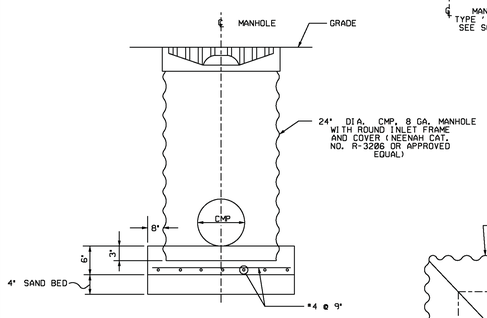

CMP MANHOLE TYPE "E"
N.T.S

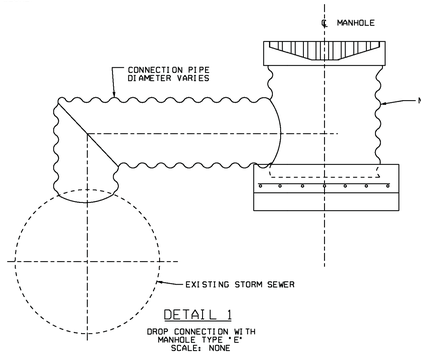

DETAIL 1
DROP CONNECTION WITH MANHOLE TYPE "E"
SCALE: NONE

NOTES

1. FOR GENERAL NOTES & LEGEND SEE DRAWING S-292
2. USE THIS DRAWING IN CONJUNCTION WITH DRAWING S-0296 SHEET 2.

REFERENCE DRAWINGS

S-0292	PLANT AREA ROADWAY, GRADING & DRAINAGE PLAN SHEET 1
S-0293	PLANT AREA ROADWAY, GRADING & DRAINAGE PLAN SHEET 2
S-0294	WAREHOUSE AREA ROADWAY, GRADING & DRAINAGE PLAN SH. 3
S-0297	PLANT AREA ROADWAY GRADING & DRAINAGE PLAN SHT. 4
S-0298	PLANT AREA ROADWAY, GRADING & DRAINAGE PLANT SHT. 3
S-0299	DRAINAGE DETAILS & SECTIONS SHT'S 1 & 3
S-0186	DRAINAGE PLAN PLANT AREA
S-0189	MANHOLE, PIPE & CULVERT SCHEDULE
S-0191	MANHOLE & PIPE DETAILS
S-0296	MANHOLE & PIPE DETAILS SHEET 2.
Z017A-C-0004	DIMENSION PLAN WCNOC PRE-SCREENING STRUCTURE Z017A.
Z017A-C-0005	GRADING PLAN WCNOC PRE-SCREENING STRUCTURE Z017A

21

USAR FIG. 2.4-3-06A

REVISED / ISSUED — INCORPORATED CHG. DOC. — CHANGE PKG. NO. 013233

THIS DWG. SUPERSEDED BY — REV. — THIS DWG. SUPERSEDES — REV.

REVISION NOTES: AS-BUILT INFORMATION

WOLF CREEK NUCLEAR OPERATING CORPORATION

ELECTRONIC APPROVAL

MANHOLE AND PIPE DETAILS

SCALE	DRAWING NUMBER	SHEET	REV
NONE	S-0296	1	21

34X44 E SIZE

THIS DRAWING AND THE DESIGN IT COVERS IS THE PROPERTY OF THE UTILITIES WHICH ARE PARTICIPATING IN THE SNUPPS PROJECT IT IS LOANED ON THE BORROWER'S EXPRESS AGREEMENT THAT IT WILL NOT BE REPRODUCED, COPIED, LOANED, EXHIBITED, OR USED EXCEPT IN THE LIMITED WAY AND PRIVATE USE PERMITTED BY WRITTEN CONSENT GIVEN BY THE SNUPPS UTILITIES TO THE BORROWER.

FORM KEF-E-313-1, REV. 10/88

	DESIGN DOCUMENT **CHANGE NOTICE**	INITIATING DOC. NCR/EER/FCR/CWR/PER NO. 4244-88-2 PMR NO. 02841 REV. 0

ASSIGNED DISCIPLINE:	DDCN NO.	DOCUMENT NUMBER	REV.	SEQ. NO.
FACILITIES ENGINEERING		S-0297	K	01

OTHER DOCUMENTS AFFECTED BY THIS CHANGE: S-0291

PAGE 1 OF 2

OTHER DDCN'S REQUIRED TO IMPLEMENT CHANGE: DDCN S-0292-R-01

REASON FOR CHANGE: AS BUILT INFORMATION

DESCRIPTION OF CHANGE: SEE CLOUDED "AREA OF CHANGE" ON PAGE 2 OF THIS DDCN.

REVIEWED WITHOUT COMMENTS

W Gary Mish FSE	7-11-89 DATE	Delbert G. Riebe ESE	7-11-89 DATE
John L Hardesty FE	7-11-89 DATE	Louis Ashurst OTHER	7-11-89 DATE

RELEASE AS DDCN FOR REVISION

ASSIGNED ENG:	John L Hardesty	DATE:	7-11-89
CHECKED BY:	K. Parthasarathy	DATE:	7-11-89
APPROVED BY:	Maurice E Langer	DATE:	7-11-89
DOCUMENT CONTROL RELEASE:	DC 31	DATE:	8-18-89

MICROFILMED

FORM KEF-E-313-2, REV. 10/88

	DESIGN DOCUMENT CHANGE NOTICE CONTINUATION SHEET	INITIATING DOC. NCR/EER/FCR/CWR/PER NO. 4244-88-2
		PMR NO. 02841 REV. 0

ASSIGNED DISCIPLINE:	DDCN NO.	DOCUMENT NUMBER	REV.	SEQ. NO.
FACILITIES ENGINEERING		S-0297	K	01

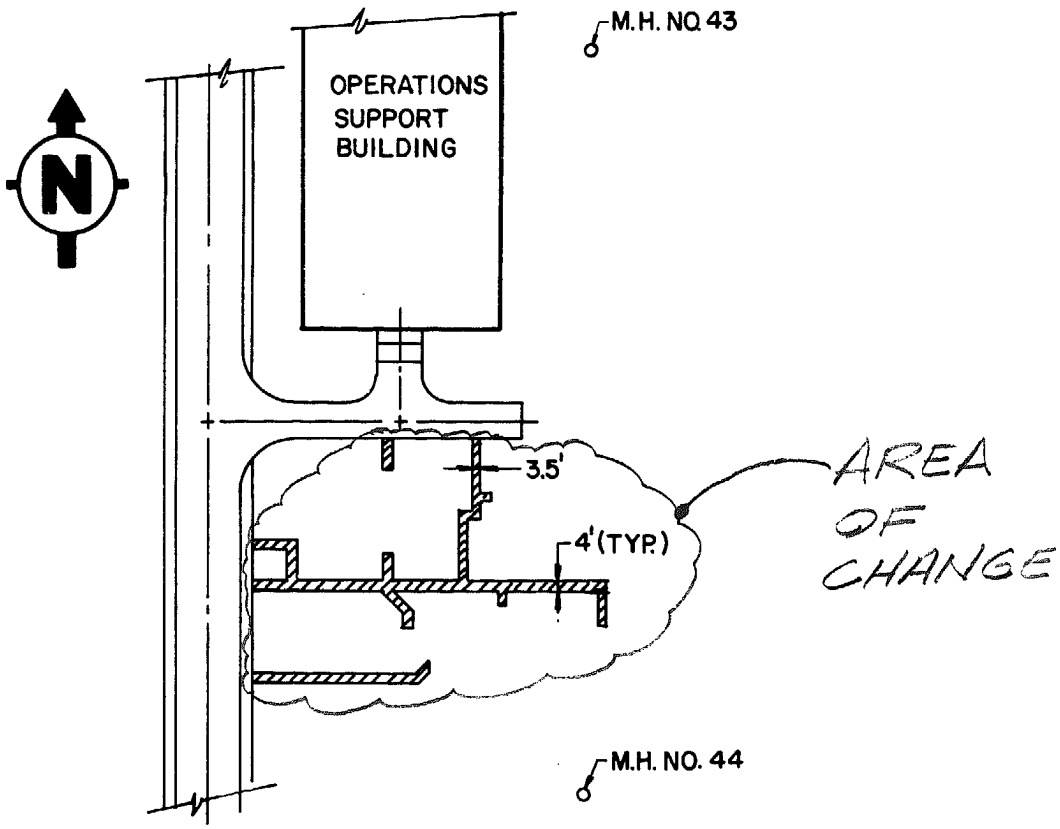

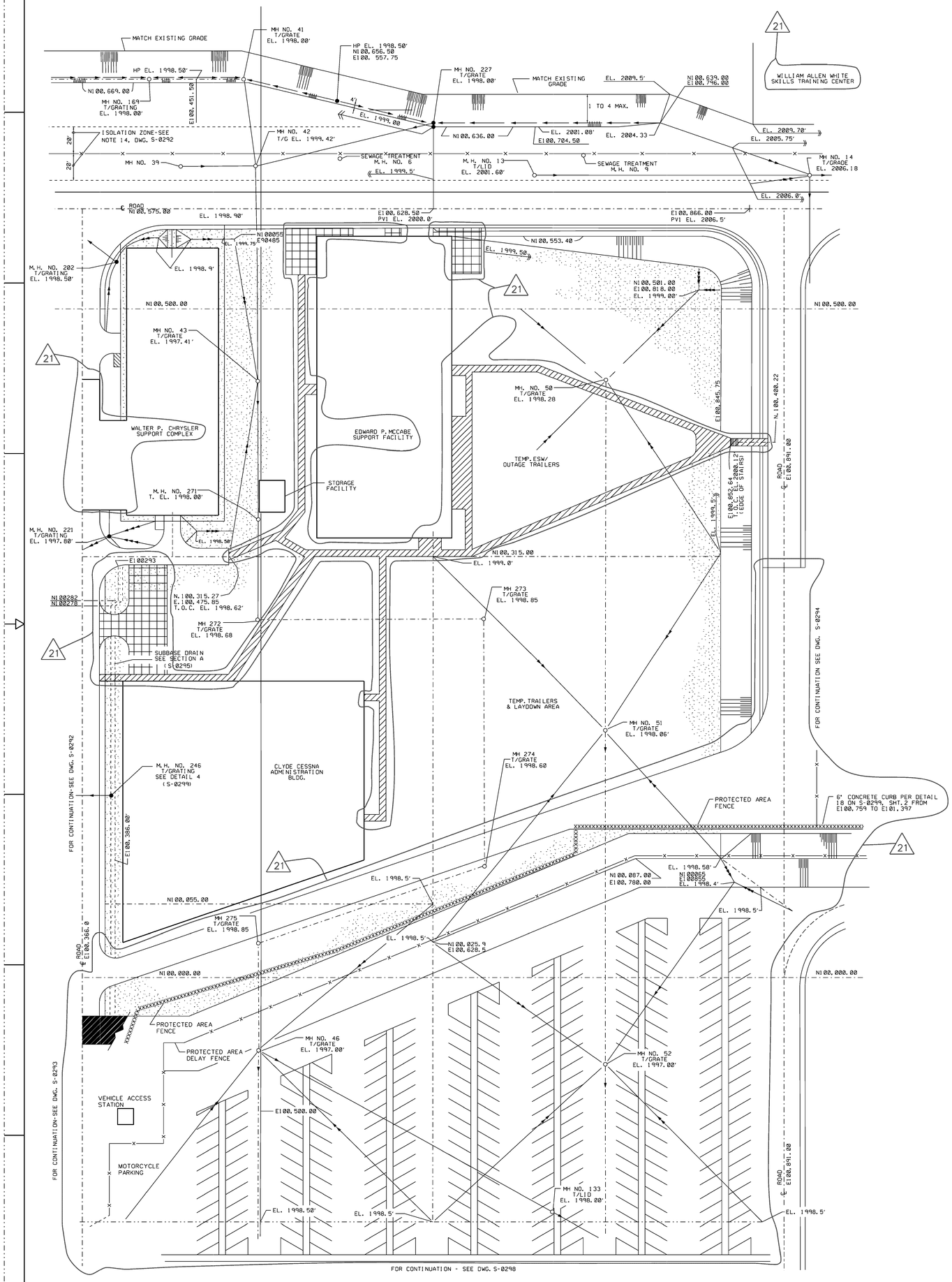

NOTES

1. FOR GENERAL NOTES & LEGENDS, SEE DWG. S-0291 & S-292
2.
3. SIDEWALK TO BE 5'-0" WIDE WITH A RADIUS OF 5'-0" AT INTERSECTIONS.
4. SIDEWALKS TO START FROM BOTTOM OF TRAILER STEPS.
5. SIDEWALKS SHALL BE SLOPED TO FOLLOW ROCK (± 1/8") & TO KEEP SIDEWALKS AS LEVEL AS POSSIBLE. IF SIDEWALK WAS RAISED ABOVE ROCK, ROCK SHALL BE LEVELED TO THE ELEVATION OF SIDEWALK. AT NO POINT SHALL SIDEWALK BE BELOW ROCK.
6. FOR TYP. SIDEWALK SECTION, EXPANSION & CONTROL JOINT DETAILS, SEE DWG. S-0295.
7. SIDEWALK TO HAVE BROOM FINISH.
8. DELETED
9. FOR COMPLETE BUILDING CONFIGURATIONS, SEE DRAWING 8025-C-K01202.

REFERENCE DRAWINGS

S-0291	FINISHED ROADWAY PLAN PLANT AREA
S-0292	PLANT AREA ROADWAY GRADING & DRAINAGE PLAN SH-1
S-0293	PLANT AREA ROADWAY GRADING & DRAINAGE PLAN SH-2
S-0294	WAREHOUSE AREA ROADWAY GRADING & DRAINAGE PLAN SH-3
S-0298	PLANT AREA ROADWAY GRADING & DRAINAGE PLAN SH-5
S-0299	DRAINAGE DETAILS & SECTIONS SHT. 1 & 3

USAR FIG. 2.4-3-07

REVISED ⊗ INCORPORATED CR# 00057844 CHANGE PKG. NO.
ISSUED CHG. DOC. CR# 00061144

THIS DWG. SUPERSEDED BY REV. THIS DWG. SUPERSEDES REV.

REVISION NOTES: REVISED TO REFLECT AS-BUILT INFORMATION

WOLF CREEK NUCLEAR OPERATING CORPORATION

ELECTRONIC APPROVAL

Kay Lynn Smith
Released by Document Services. Release Date: 2013.09.11 08:49:36 -05'00'

PLANT AREA ROADWAY GRADING & DRAINAGE

SCALE	DRAWING NUMBER	SHEET	REV
1"=30'-0"	S-0297		21

34X44 E SIZE

S-0297-1-21