APPENDIX A

ATWS TRAINING PROGRAM

PSEG

Public Service Electric and Gas Company 244 Chestnut Street Salem, N.J. 08079 Phone 609/935-8560

Nuclear Training Center

March 11, 1983

TRAINING OBJECTIVES

Following are the objectives for Anticipated Transient Without a Trip (ATWT) training conducted at Salem Generating Station. Upon completion the student will be able to:

1. Define Anticipated Transient Without a Trip (Condition II FSAR Event with a common-mode failure).

2. Describe how the inherent stability of the reactor will reduce reactor power on a "Loss of Heat Sink" (ATWT type event).

3. Explain how "dead-heading" of the centrifugal charging pumps could occur during an ATWT type event.

4. State which ATWT type event will cause the highest pressure transient on the reactor coolant system.

5. Explain why pressure could increase to 2974 psia on an ATWT type event.

6. Knowledgably discuss the ATWT event of February 25, 1983 and know it was classified as an Alert, in accordance with our Emergency Plan, classified a Significant Event, in accordance with 10 CFR 50.72, and required Immediate Notification (within one hour).

7. State which reactor trip breaker coils are operated when:

   a. An automatic trip signal is generated via the SSPS (Solid State Protection System).

   b. The W (handle-type) reactor trip switches are used.

   c. The "bezel" pushbuttons for the reactor trip breakers are used.

8. State which coil(s) energize to trip the reactor trip breakers.

9. State which coil(s) de-energize to trip the reactor trip breakers.

10. Identify which component within the reactor trip breaker prevented an automatic reactor trip on February 25, 1983 and probably prevented the automatic reactor trip on February 22, 1983.

11. List the Immediate Actions (both automatic and manual) for a Reactor Trip, EI-4.3.

12. State which reactor trip breaker and bypass breaker is operated via SSPS Train "A" actuation.

13. State which reactor trip breaker and bypass breaker is operated via SSPS Train "B" actuation.

14. Explain the difference between a <u>demand</u> and a <u>confirmation</u> trip signal.

15. List the five "confirmation" trip signals displayed in the control room for a reactor trip.

16. Describe and explain the design and function of the safety-related systems and sub-systems at Salem Nuclear Station for mitigation of ATWT Events.

17. Outline the steps that the Senior Shift Supervisor and Operations Manager must perform after a reactor trip in accordance with AD-16, Post Reactor Trip/Safety Injection Review and Unit Startup Approval Requirements.

18. Explain the approval process for reactor plant startup following:

    a. Planned unit outages.

    b. A reactor trip/safety injection actuation with the cause known.

    c. A reactor trip/safety injection actuation with the cause unknown.

R. E. Schaffer
Principal Training Supervisor

RES:jcp

SALEM GENERATING STATION

INSTRUCTOR LESSON PLAN

TITLE: ATWT HANDOUT #1

LESSON NO: _____

DURATION: _____

REVISION NO: _____ DATE: 3/8/83

SUBMITTED: R. SWEENEY DATE: 3/8/83

APPROVED: [illegible] DATE: 3-8-83

ANTICIPATED TRANSIENT WITHOUT A TRIP TRAINING

(SALEM UNITS I & II)

OBJECTIVES....

Upon completion the student will be able to :

1. Define Anticipated Transient Without a Trip (Condition II FSAR Event with a common-mode failure).

2. Describe how the inherent stability of the reactor will reduce reactor power on a "Loss of Heat Sink" (ATWT type event).

3. Explain how "dead-heading" of the centrifugal charging pumps could occur during an ATWT type event.

4. State which ATWT type event will cause the highest pressure transient on the reactor coolant system.

5. Explain why pressure could increase to 2974 psia on an ATWT type event.

6. Knowledgably discuss the ATWT event of February 25, 1983 and know it was classified as an Alert, in accordance with our Emergency Plan, classified a Significant Event, in accordance with 10 CFR 50.72, and required Immediate Notification (within one hour).

7. State which reactor trip breaker coils are operated when:

   a) An automatic trip signal is generated via the SSPS (Solid State Protection System).

   b) The W (handle-type) reactor trip switches are used.

   c) The "bezel" pushbuttons for the reactor trip breakers are used.

8. State which coil(s) energize to trip the reactor trip breakers.

9. State which coil(s) de-energize to trip the reactor trip breakers.

10. Identify which component within the reactor trip breaker prevented an automatic reactor trip on February 25, 1983 and probably prevented the automatic reactor trip on February 22, 1983.

11. List the Immediate Actions (both automatic and manual) for a Reactor Trip, EI-4.3 .

12. State which reactor trip breaker and bypass breaker is operated via SSPS Train "A" actuation.

13. State which reactor trip breaker and bypass breaker is operated via SSPS Train "B" actuation.

14. Explain the difference between a demand and a confirmation trip signal.

15. List the five "confirmation" trip signals displayed in the control room for a reactor trip.

16. Describe and explain the design and function of the safety-related systems and sub-systems at Salem Nuclear Station for mitigation of ATWT Events.

17. Outline the steps that the Senior Shift Supervisor and Operations Manager must perform after a reactor trip in accordance with AD-16,Post Reactor Trip/Safety Injection Review and Unit Startup Approval Requirements.

18. Explain the approval process for reactor plant startup following:

    a) Planned unit outages.

    b) A reactor trip/safety injection actuation with the cause known.

    c) A reactor trip/safety injection acutation with the cause unknown.

INSTRUCTOR REFERENCES:

TRAINING MATERIAL REQUIRED: OVERHEAD PROJECTOR
SCREEN

STUDENT HANDOUTS: #1

CLASSROOM REQUIREMENTS:

NOTES

I. Preface

On the morning of February 25, 1983 a transient occurred on Unit #1 during the start-up phase after the refueling. This transient fell under the category known as "Anticipated Transient Without a Scram" or "Anticipated Transient Without a Trip".

In 1969, a question was raised concerning the effects of anticipated transients without a reactor trip. Initially, it was believed by the AEC that this was a very low probability event; until the AEC staff took a closer look to find that there were ~10/year/plant (CONDITION II EVENT) Thus, they concluded that the combined probability of anticipated transients and a common mode failure could be such that a safety problem did really exist.

Handout #1

On Aug. 19, 1981, a Mr. Steitler put together a brief overall package concerning this matter. Handout #1 contains a few pages of his discussion.

- TP-1

  Condition II transients (15 listed in FSAR) in Chapter 15. The SSPS was evaluated for random conponent failures and the likelihood of no trip following initiation of condition II events was on the order of magnitude of 2×10^{-7}.

- TP-2, 3, 4, 5, 6

ANTICIPATED TRANSIENTS

WITHOUT SCRAM

ATWS

AUGUST 19, 1981

BASIC GROUNDRULES FOR ATWS THAT HAVE NOT CHANGED

- ANTICIPATED TRANSIENTS - THESE ARE THE CONDITION II TRANSIENTS IN THE FSAR. THESE TRANSIENTS SHOW TRIVIAL RESULTS BECAUSE A REACTOR SCRAM IS GENERATED.

- WITHOUT SCRAM - SOMEHOW A C'F IN THE REACTOR PROTECTION SYSTEM PREVENTS THE RODS FROM FALLING INTO CORE. ALL INPUTS AND OUTPUT TO THE REACTOR PROTECTION SYSTEM FAIL AT THE SAME TIME.

- BECAUSE OF THE LOW PROBABILITY OF ATWS EVENTS THE NRC HAS ALLOWED FOR THE USE OF BEST ESTIMATE INITIAL CONDITIONS

ATWS LIMITS

- NO GROSS FUEL DAMAGE
- NO GROSS OVER PRESSURIZATION
- NO CONTAINMENT PRESSURE EXCURSION

DIFFERENT TYPES OF ATWS EVENTS

- REACTIVITY EXCURSIONS
- LOSS OF HEAT SINK
- DEGRADATION OF HEAT REMOVAL IN RCS

LOSS OF HEAT SINK

- POWER MISMATCH SUCH THAT PRIMARY HEATS UP FASTER THAN SECONDARY CAN REMOVE HEAT

- NET RESULT IS THAT PRIMARY COOLANT TEMPERATURES AND PRESSURE INCREASE

- NORMALLY, THIS IS SENSED BY MANY DIFFERENT TRIP SIGNALS AND THE PRIMARY IS SHUTDOWN VIA A SCRAM

- WITHOUT SCRAM - THE PRIMARY SIDE TEMPERATURE AND PRESSURE RISE ARE LIMITED BY INHERENTLY NEGATIVE TEMPERATURE COEFFICIENTS

EVENTS CONSIDERED

- EXCESS LOAD INCREASE
- LOSS OF NORMAL FEEDWATER
- LOSS OF LOAD (TURBINE TRIP)

IMPORTANT PARAMETERS OF INTEREST

- PRESSURE AND TEMPERATURE TRANSIENT ARE DIRECTLY TIED TO THE:
  - MODERATOR TEMPERATURE COEFFICIENT
  - DOPPLER TEMPERATURE COEFFICIENT
- PEAK PRESSURE IS A STRONG FUNCTION OF
  - PORV'S AND SAFETY VALVE WATER RELIEF RATES
  - INITIAL POWER LEVEL
  - S/G HEAT TRANSFER CAPABILITIES
- HEAT SINK MUST BE RE-ESTABLISHED VIA AUXILIARY FEEDWATER

- ANY ATWS EVENT THAT IS A HIGH PRESSURE CONCERN ALSO RESULTS IN INCREASE IN COOLANT TEMPERATURE

- THE INCREASE IN COOLANT TEMPERATURE RESULTS IN NEGATIVE REACTIVE INSERTION DUE TO NEGATIVE TEMPERATURE COEFFICIENT

- THE NEGATIVE REACTIVE IS BALANCED BY DOPPLER FEEDBACK SUCH THAT POWER IS REDUCED - I.E. PLANT STAYS CRITICAL

$$\alpha_{MODERATOR}(T - T_{INITIAL}) = \alpha_{POWER}(Q - Q_{INITIAL})$$

SALEM GENERATING STATION

INSTRUCTOR LESSON PLAN

TITLE: ATWT HANDOUT #2

LESSON NO: _____

DURATION: _____

REVISION NO: _____

DATE: 3/8/83

SUBMITTED: R. SWEENEY

DATE: 3/8/83

APPROVED: [signature]

DATE: 3-8-83

INSTRUCTOR REFERENCES:

TRAINING MATERIAL REQUIRED: overhead PROJECTOR
SCREEN

STUDENT HANDOUTS: #2

CLASSROOM REQUIREMENTS:

NOTES

II. Westinghouse Owners Group/Emergency Response Guidelines (WOG/ERG)

From the WOG/ERG seminars held, guidelines were set forth to handle various types of transients. One of which was the ATWS (Anticipated Transient Without Scram).

TP-1

A. Purpose

1. Add -ρ when rods did not insert upon demand

2. Establish heat sink for primary

3. Prevent/minimize damage to fuel and release of radioactivity

B. Symptoms

1. Rx trip bkrs. fail to open

2. Rod position indication

3. No rod bottom lites

4. (N) level not decreasing

C. Go thru 9 steps addressed in ECA-1

TP-2

TP-3

- Step 1 - The first action is to mitigate the consequences as quickly as possible. To do this, he must perform the 1st three steps. They are to be performed without delay.

  Rx trip - W switches
  Pushbuttons
  Drive rods in

  Trip Turbine - this is especially important if th ATWT was caused due to loss of F.W.

  Manual P.B.
  OST switch
  Turning off EH pumps
  Manually R.B. turbine

NOTES

- Steps #2 and 3

  Must maintain a heat sink for the primary. If need be, manually start MDEFP's;

  Open steam valves for SDEFP.

  Ensure adequate inventory in AF storage tank.

  Ensure 11's and/or 21's are operating properly.

- Steps #4 and 5

  If attempts have failed via C.R. actions, then local operation must be accomplished. Principle concern would be the Reactor followed by Turbine, feedwater.

  - Opening Rx trip bkrs., deenergizing MG sets, local trip lever on turbine front standard.

- "Caution"

  During an ATWS, RCS pressure can rise above pump shutoff head and, therefore, the pump mini-flow valves must remain open in order to avoid dead-heading the pumps.

- Step #6

  To get to Step #6, all attempts have failed to trip the reactor and neg. ρ must be added to bring reactor subcritical.

  - Emergency boration
  - Injecting the BIT
  - S.I. actuation (Keep in mind, however, S.I. actuation also trips MFW pumps.)

NOTES

If necessary to ↓ RCS pressure below shut off head of charging pumps, the PZR. PORV's could be used, but ensure successful closure.

- Step #7

  When using PZR. PORV, there is a chance that the PRT rupture disk will blow. Even though fuel failure is not expected, as a precautionary step, you should isolate cont. ventilation.

- Step #8

  Boration must continue until an adequate SDM has been attained. If the PZR. goes solid, a bleed and feed method thru the pressurizer PORV will be required.

NOTES

III. WOG/ERG

A. As stated previoudsly, Condition II events are classified under 15 types of events covering events such as:

- Uncontrolled Rod group withdrawal from subcritical Rx
- Uncontrolled Rod group withdrawal from power
- Start-up of inactive loop
- Blackout
- Loss of normal feedwater

Because of the numerous types of events, the response of the primary initially may be quite different; however, the operator response is the same once he identifies an ATWT has occurred.

Additionally, the response of primary would be different for the same event, depending on when in core life it occurs; especially since the value of MTC changes throughout the fuel cycle. For the worst cases, addressed as long as a reactor trip is generated within 10 minutes, a turbine trip within 30 seconds (for loss of MFW); aux. F.W. established within 60 seconds, acceptable consequences will result.

B. The one ATWT that causes the highest RCS pressure excursion is a main turbine trip from 100% due to loss of vacuum which additionally causes a loss of MFW.

TP-4

- RCS Pressure Transient

  Pressurizer relief valve lifts in 5 sec.; S-G safeties lift in 11 sec., which corresponds to the 1st peak in pressurizer pressure. Water expanding causes pressurizer to fill solid and

NOTES

safety valves lift at 100 sec. Then peak pressure reached at 120 sec. of 2974 psia.

TP-5/6

- Nuclear Power Transient

  By overlaying the graph of power upon RCS T_{ave}, you will see that it is the inverse. Thus, as T_{ave} ↑ power ↓. Power initially ↓ to ≈68% and continues to ↓ at ≈110 sec.

- At ≈10 minutes, AFW is established.

TP-7

C. There are 3 main results that need to occur for an ATWT:

- Trip reactor
- Trip turbine
- Establish AFW

(Review Figure #6)

Number	Symptom/Title	Revision No./Date
ECA-1	ANTICIPATED TRANSIENT WITHOUT SCRAM	Basic 1 Sept. 1981

STEP	ACTION/EXPECTED RESPONSE	RESPONSE NOT OBTAINED

A. PURPOSE

The purpose of this guideline is to add negative reactivity to the core when the control/shutdown banks are not inserted upon demand, to establish and maintain a heat sink for conditions amenable to long term cooling, and to prevent or minimize damage to the fuel and release of excessive radioactivity.

B. SYMPTOMS

Following are symptoms of an anticipated transient without scram condition:

1. Reactor trip breakers fail to open
2. Rod position indicators show failure of CRDMs to insert
3. Rod bottom lights not lit
4. Neutron level not decreasing rapidly corresponding to large negative reactivity insertion

STEP	ACTION/EXPECTED RESPONSE	RESPONSE NOT OBTAINED
	NOTE ○ *Circled numbers show immediate actions steps.* ○ *If at any time a reactor trip occurs, immediately go to E-0, REACTOR TRIP OR SAFETY INJECTION, STEP 2.*	
1	Perform Following Actions From Control Room:	
	a. Try to trip reactor manually	a. Try to manually insert control rods.
	b. Try to trip turbine manually	b. Try to runback turbine.
2	Check AFW Pumps Running:	
	a. Motor-driven pump breaker indicator lights - LIT	a. Manually start pumps.
	b. Turbine-driven pump steam supply valves - OPEN	b. Manually open valves.
3	Check AFW Valve Alignment:	
	a. AFW valves - PROPER EMERGENCY ALIGNMENT (1)	a. Manually open or close valves as appropriate.
4	Check If The Following Trips Have Occurred:	
	a. Reactor trip	a. If not, try to trip reactor locally. 1) [Enter plant specific means.]
	b. Turbine trip	b. If not, try to trip turbine locally. 1) [Enter plant specific means.]

(1) Enter plant specific list.

STEP	ACTION/EXPECTED RESPONSE	RESPONSE NOT OBTAINED
5	Verify AFW Flow:	
	a. AFW flow indicators - CHECK FOR FLOW	a. Perform actions of steps 2 and 3 locally.
	Caution *Charging pump miniflow valves must remain open when RCS pressure is greater than pump shutoff head.*	
6	Initiate Rapid Boration Of RCS To Obtain Adequate Shutdown Margin:	
	a. Start charging pumps	
	b. Align boration flow path (1)	
	c. Check RCS pressure - LESS THAN (2) PSIG	c. Open pressurizer PORVs, as necessary, until RCS pressure is (3) psig.
7	Verify Containment Ventilation Isolation	IF isolation has NOT occurred, THEN manually isolate containment ventilation.
8	Maintain Adequate Shutdown Margin	
9	Go to E-0, REACTOR TRIP OR SAFETY INJECTION, STEP 2.	

— END —

(1) Enter plant specific means.
(2) Enter plant specific pump shutoff head.
(3) Enter 200 psig below plant specific pumpshutoff head.

BACKGROUND INFORMATION
FOR
WESTINGHOUSE
EMERGENCY RESPONSE GUIDELINES

ECA-1

ANTICIPATED TRANSIENT WITHOUT SCRAM

BASIC REVISION

SEPTEMBER 1, 1981

I. INTRODUCTION

The guideline ECA-1, "Anticipated Transient Without SCRAM (ATWS)," specifies the mitigating actions required following ATWS events - a family of Condition II accidents requiring a reactor trip but, through some failure in the protection system, the trip is not obtained. The reactor coolant system conditions at the time the operator identifies an ATWS event can be very different depending on the initiating event. Loss of main feedwater, control bank withdrawal at power, and a spurious opening of a pressurizer PORV are examples of the differing nature of ATWS events. The required operator actions following identification of an ATWS event are the same but the reactor coolant system conditions may be very different; pressurizer pressure can exceed 2800 psia following a loss of main feedwater ATWS but will never exceed the nominal operating pressure following the spurious opening of a pressurizer PORV. Operators must be aware of such system responses and not rely on any signals or indications other than those for reactor trip.

Transient response is also highly dependent on the time in fuel cycle at which an ATWS occurs. Response is much more severe very early in cycle lifetime than later in the cycle. For example, primary pressure may exceed 3000 psia for a turbine trip ATWS at beginning of cycle life but not exceed 2575 psia (the pressurizer safety valve setpoint + accumulation) near the end of cycle life.

This guideline only addresses the short-term operator actions. The operator must attempt alternate means of reactor trip and maintain a secondary-side heat sink via turbine trip (for a total loss of main feedwater) and auxiliary feedwater actuation. Analyses have shown that if a reactor trip is generated within 10 minutes, a turbine trip within 30 seconds (for a loss of main feedwater), and auxiliary feedwater actuated within 60 seconds, acceptable consequences result. These times are for the limiting ATWS transients. Turbine trip and actuation of auxiliary feedwater would normally be generated by the reactor protection system but it is assumed that the same fault that prevents a reactor trip also prevents these functions. Therefore, the guideline provides

for these functions to be performed without delay by the operator in the control room.

Long-term cooldown to cold shutdown conditions is not addressed. Plant cooldown in a controlled manner is to be performed utilizing normal procedures as much as possible.

II. DESCRIPTION OF EVENT TRANSIENT

The ATWS transient analyses were performed using composite plant parameters to bound as many Westinghouse plants as possible, rather than using parameters for any specific plant. Sensitivity studies were performed for the limiting cases to demonstrate that the conclusions are valid for all plants covered by the generic approach. The analyses considered 2-, 3-, and 4-loop plant configurations with 51 and 44 Series and Model D and F steam generators. The reference plant was defined to be a 4-loop, 51 Series steam generator plant.

Though numerous ATWS events have been analyzed, this section will be devoted to a description of the loss of load transient only, since this is a limiting ATWS transient with respect to peak pressure. For a more detailed treatment of this transient and descriptions of other ATWS transients, refer to the two ATWS reports listed in the Reference section (Section V) of this document.

For loss of load without reactor trip:

A major loss of load could result from either a loss of external electrical load or from a turbine/generator trip. In either case, unless a loss of ac power to the station auxiliaries also occurs, off-site power would be available for the combined operation of plant components, such as the reactor coolant pumps. In this case, the loss of load accident was analyzed assuming that the control rods fail to drop into the core following a turbine trip from full power, which would produce the maximum possible load loss. The most severe plant conditions that could result from a loss of load occur following a turbine trip from full

power when the turbine trip is caused by a loss of condenser vacuum. Since the main feedwater pumps may be turbine driven with steam exhaust to the main condenser, loss of feedwater may also result from a loss of condenser vacuum.

Plant behavior was evaluated for a turbine trip and loss of main feedwater occurring from full power with the assumption that the control rods fail to drop into the core following generation of a reactor trip signal. This evaluation showed the effectiveness of RCS pressure-relief devices and the extent of any approach to core safety limits. The results are presented below for the reference plant only (4-loop, 51 Series steam generator plant).

Figures 1 through 5 show the plant transient response for a loss of load without reactor trip for a 4-loop plant with a 51 Series steam generator and a moderator temperature coefficient valid for 95 percent of core life (95 percent MTC). Sequence of events for this transient are shown in Table 1. The first peak in pressurizer pressure occurs when the steam generator safety valves lift, and the second, higher peak (maximum system pressure* of 2974 psia) occurs after the pressurizer is filled with water due to a coolant volume surge resulting from a rapid reduction of steam generator heat transfer. Nuclear power decreases to a value of 68 percent due to negative reactivity feedback caused by moderator (coolant) heating. Further coolant heatup, caused by loss of steam generator heat transfer, decreases nuclear power further, starting at about 110 seconds.

The DNB ratio does not drop below its initial value during the transient.

---

* It should be noted that there is a difference between "pressurizer pressure" and "system pressure" as used here. When pressurizer pressure is given, it refers to the pressure in the pressurizer, whereas the system pressure is defined to be the pressure taken at the discharge of the reactor coolant pump, the maximum pressure in the reactor coolant system. The system pressure definition includes pump head and elevation head and will be higher than pressurizer pressure by as much as 100 psi.

At ten minutes into the transient, conditions are stablized, with auxiliary feedwater providing heat removal capability and with an intact Reactor Coolant System and core. Thus, the operator could begin shutdown operations through rod insertion, actuation of the safety injection system, or through the BORATE or EMERGENCY BORATE modes of the Chemical and Volume Control system.

Transient results for 3-loop and 2-loop plants with 51 Series steam generators are similar to those presented for the 4-loop case. A peak reactor coolant system pressure of 2861 psia results for a 3-loop plant, and a peak pressure of 2753 psia results for a 2-loop plant configuration.

The following conclusions have been drawn from this particular ATWS event - loss of load:

During a loss of load with failure of rod insertion after a reactor trip signal generation, core safety limits are not exceeded since the DNB ratio does not go below its initial value and the peak reactor coolant pressure is limited to 2974 psia for the 4-loop, 51 Series reference case. Furthermore, plant conditions are stabilized at 10 minutes such that the operator can begin shutdown operations.

TABLE 1

SEQUENCE OF EVENTS FOR LOSS OF LOAD WITHOUT A REACTOR TRIP FOR THE REFERENCE CASE*

Event	Time (seconds)
Turbine trips	
Reactor trip signal generated on turbine trip	0
Pressurizer relief valves lift	5
High pressurizer pressure reactor trip setpoint reached	6.4
Overtemperature ΔT reactor trip setpoint reached	8.4
Steam generator safety valves lift	11
Auxiliary feed pumps begin delivering flow	60
Pressurizer safety valves lift and pressurizer fills with water	99
Maximum reactor coolant pressure (2974 psia) reached	120

* Reference case: 4-loop plant with a 51 Series steam generator, 95 percent MTC

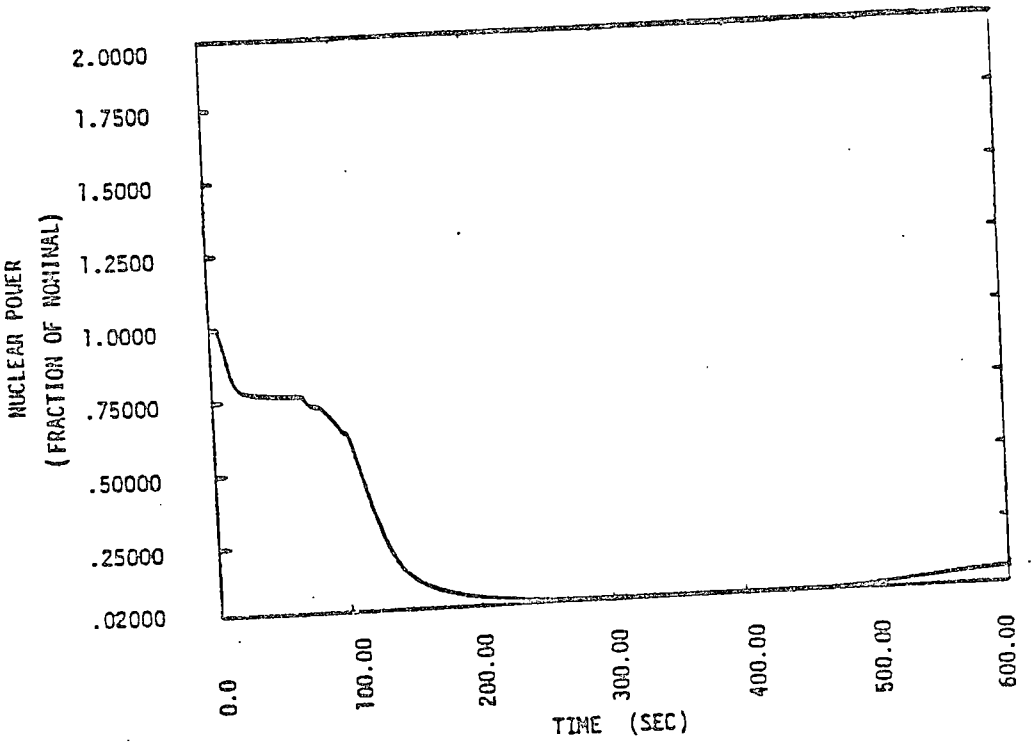

LOSS OF LOAD ATWS
REFERENCE CASE
95% MTC

FIGURE 1

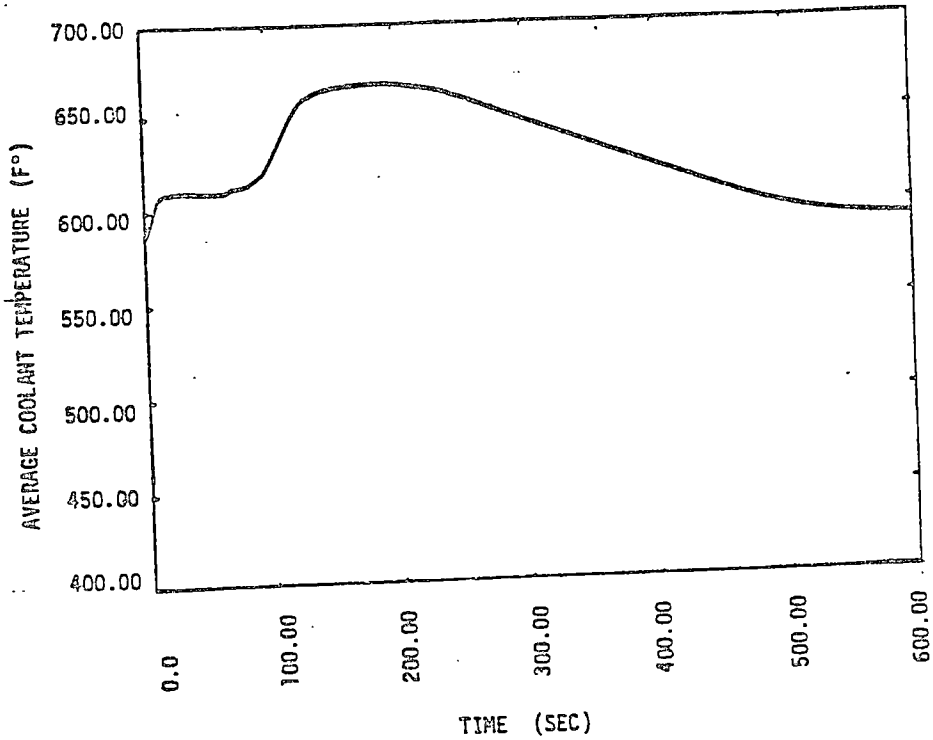

LOSS OF LOAD ATWS
REFERENCE CASE
95% MTC

FIGURE 2

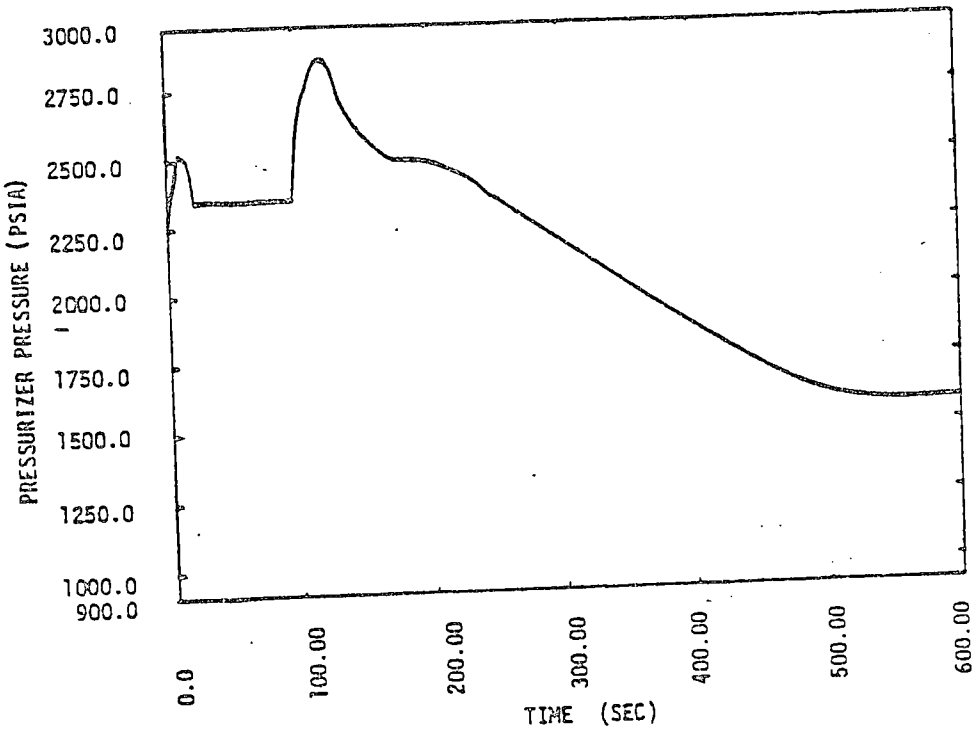

LOSS OF LOAD ATWS
REFERENCE CASE
95% MTC

FIGURE 3

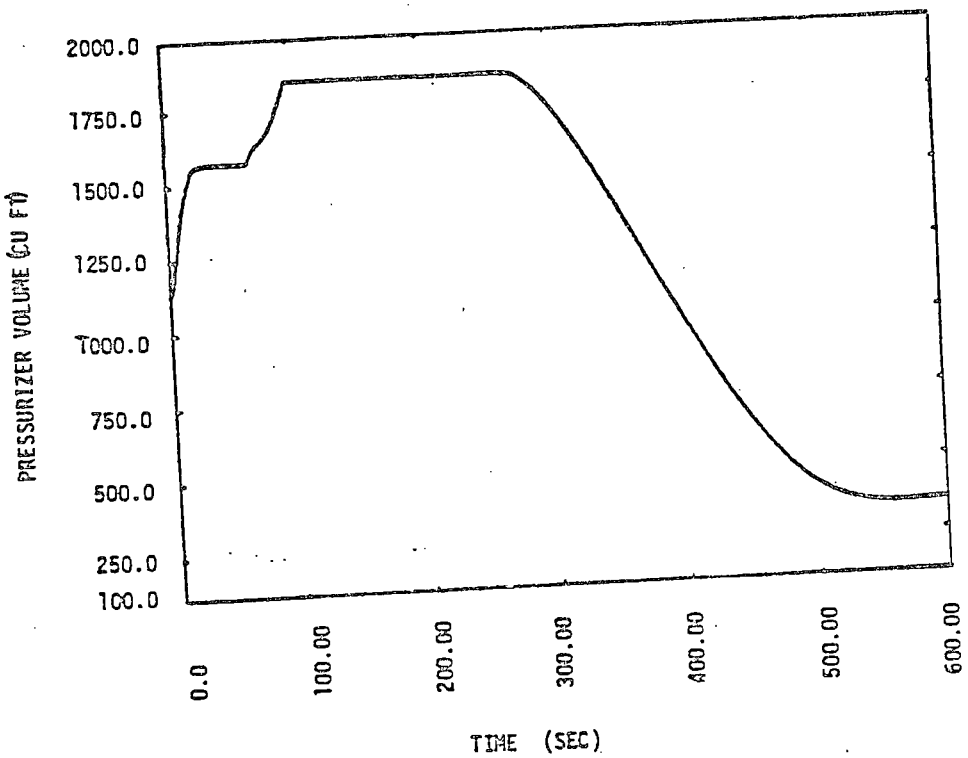

LOSS OF LOAD ATWS
REFERENCE CASE
95% MTC

FIGURE 4

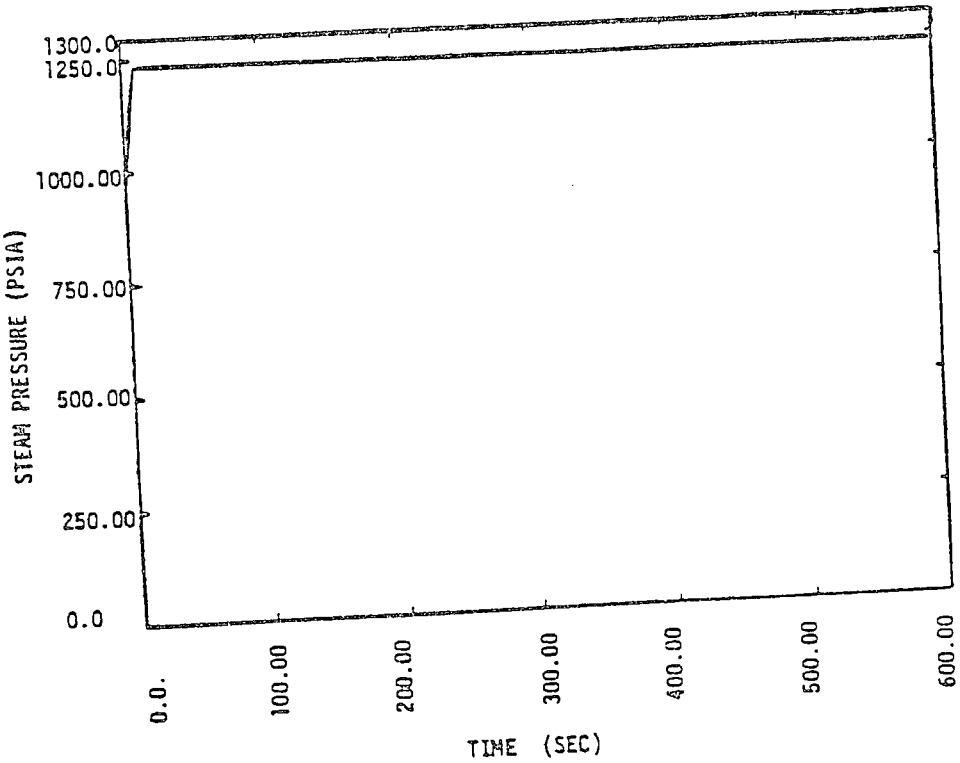

LOSS OF LOAD ATWS
REFERENCE CASE
95% MTC

FIGURE 5

III. RECOVERY DESCRIPTION

The recovery technique employed in guideline ECA-1, "Anticipated Transient Without SCRAM," is composed of three main functions - reactor trip, turbine trip, and auxiliary feedwater actuation - that must be performed without delay from the control room, or, if this proves unsuccessful, operators must be dispatched to perform these actions locally. If the reactor is tripped, the operator is instructed to leave this guideline and proceed to E-0, "Reactor Trip or Safety Injection," step 2. However, if the reactor cannot be tripped, a rapid boration of the RCS must be initiated and continued in order to establish adequate shutdown margin. As a precautionary measure, containment ventilation must be isolated at this time. The final step of the recovery involves maintaining adequate shutdown margin once it is achieved. A block diagram description of steps in guideline ECA-1 is given in Figure 6.

FIGURE 6. ANTICIPATED TRANSIENT WITHOUT SCRAM (ECA-1)

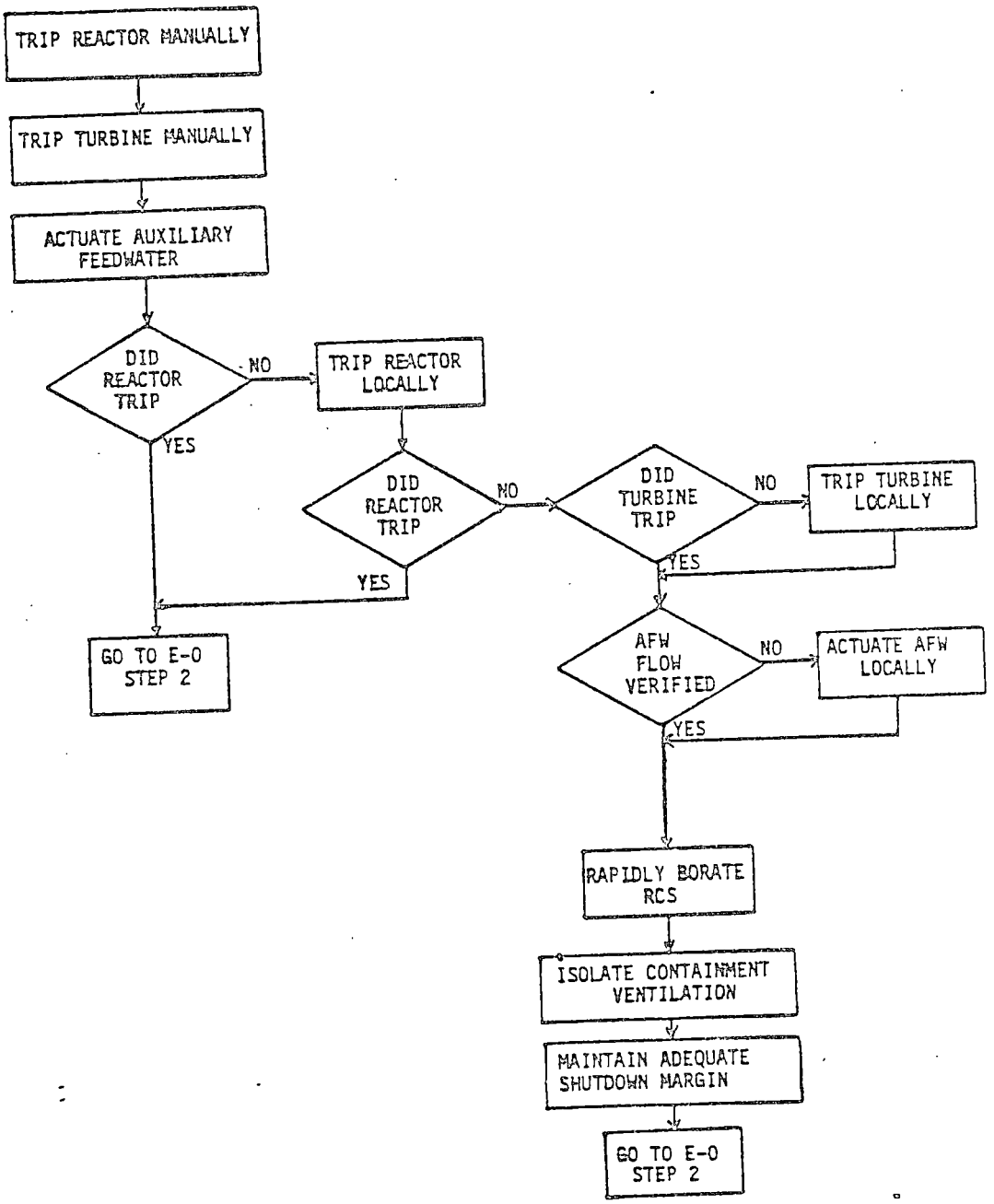

IV. DISCUSSION OF SPECIFIC GUIDELINE STEPS, CAUTIONS AND NOTES

Step 1

Once an operator has diagnosed an ATWS event using the indications listed in the SYMPTOMS section, his first actions must be an attempt to mitigate the consequences in the quickest means possible, i.e., from the main control board. The note before this step alerts the operator that the first three steps are immediate actions to be performed without delay.

In the control room, the operator must first attempt to trip the reactor by use of the manual trip buttons or, if necessary, by manually inserting the control rods. If the trip is successfully obtained, the ATWS portion of the transient is terminated with the consequences then being no more severe than those of the initiating transient. The note instructs the operator to immediately proceed to guideline E-0, "Reactor Trip or Safety Injection," step 2 if, at any time during the conduct of the ATWS procedure, a reactor trip occurs. In guideline E-0, diagnosis of the initiating event is performed.

The operator should next attempt a turbine trip, if one has not automatically occurred to maintain steam generator inventory. A turbine trip is required for the loss of main feedwater ATWS. For the remaining ATWS events, with the exception of the case when a turbine trip is the initiating event, manual tripping of the turbine will create an unanalyzed situation, superimposing a loss of load type of event on the initiating ATWS transient. This unanalyzed case may yield a somewhat higher system pressure depending on the initiating event and time in core life.

The turbine can be tripped in the control room by the manual trip buttons, use of overspeed test switch, and turning off EH control oil pumps. If these methods fail, the operator should attempt to manually run back the turbine.

Steps 2 and 3

The second component in maintaining a secondary side heat sink is the actuation of auxiliary feedwater. If the auxiliary feedwater system doesn't start automatically, the following actions should be performed from the control room:

a. Manually start motor-driven AFW pumps;

b. Manually open turbine-driven AFW pump steam supply valves;

c. Manually open or close AFW valves as appropriate for proper valve alignment (observe valve status lights)

d. Verify that the water supply to the suction of the AFW pumps is available by observing CST level indication, absence of CST low level alarms and AFW suction pressure low alarm, and adequate pressure at the suction of the AFW pumps.

Step 4.

If any of the required functions in Step 1 have not been successfully achieved when attempted from the control room, an operator should be dispatched to perform the actions locally. The local actions are done after those from the control room since they are more time consuming; the control room actions can all be completed quickly without significant impact on the time of local attempts should they be necessary.

Local reactor trip actions are performed first since the sooner a trip is obtained the less severe the ATWS transient will be. The reactor can be tripped locally by opening all reactor trip breakers, de-energizing the MG sets providing power to the rods, or other plant specific means of cutting power to the rods. Plant specific means may include de-energizing buses that supply power to the MG sets, opening disconnect switches that supply power to the power cabinets, etc.

Local attempts for turbine trip and auxiliary feedwater actuation are needed to maintain a secondary side heat sink. Analyses have taken credit for a turbine trip sooner than auxiliary feedwater actuation so the local actions are to be performed in that order. Plant specific means for tripping the turbine may include using the local trip lever, using local overspeed test equipment, locally securing EH pumps, venting EH system, closing the main steamline isolation valves, etc.

Step 5

Total auxiliary feedwater flow is required following ATWS events. Therefore, any of the actions of steps 2 and 3 that could not be performed in the control room should be done locally to obtain full AFW flow.

Step 6

The operator has progressed to this step only if all means of obtaining a reactor trip have failed. Negative reactivity must be added to the core through boration of the reactor coolant system to bring the reactor subcritical. The caution preceding this step has been added for the protection of the charging pumps that are required for boration. Under normal conditions, the charging pump shutoff head is greater than the RCS design pressure. However, during an ATWS event RCS pressure can rise above the pump shutoff head and, therefore, the pump miniflow valves must remain open in order to avoid dead-heading the pumps.

The method of boration is a function of plant configuration and, hence, the boration flow path must be aligned according to plant specific means. Methods of boration include emergency boration, injecting the BIT, and safety injection actuation. It should be noted that SI actuation will trip the main feedwater pumps. If this is undesirable, the operator can manually align the system for safety injection. However, the RWST valves to the suction of the SI pumps should be opened first before opening up the BIT valves.

If RCS pressure is above the shutoff head of the charging or SI pumps, boration will be impeded. Therefore, pressurizer PORVs must be opened, as necessary, to reduce RCS pressure and obtain injection flow. The PORVs should be closed when primary pressure drops 200 psi below the operating boron injection pump shutoff head. The operator must verify successful closure of the PORVs, closing the backup isolation valves, if necessary.

Step 7

The pressurizer relief tank rupture disk may have burst during the event. If containment ventilation has not been automatically isolated the operator should do so manually. This is a precautionary measure; analysis has shown that fuel failure is not expected following an ATWS event.

Step 8

Boration must continue to establish the required Technical Specification shutdown margin and cool the RCS to no-load T_{avg}. A "bleed and feed" method of boration through a pressurizer PORV will be required if the pressurizer goes water solid. In this case a PORV should be opened as needed to permit injection of borated water through reduction of RCS pressure and removal of low-concentrate liquid volume from the RCS. The operator must verify successful closure of the PORV, closing the backup isolation valve if necessary.

Once adequate shutdown margin is established, the operator is instructed to maintain this condition. It should be noted that shutdown margin calculations should compensate for any rods that will not insert.

Step 9

Once reactor coolant system conditions have stabilized and the reactor is subcritical the operator should proceed to E-0, "Reactor Trip or

Safety Injection" step 2 to establish conditions allowing the operator to continue to a cold shutdown condition; Technical Specifications require this if two or more control rods are not fully inserted upon demand.

V. REFERENCES

1. Anticipated Transients Without SCRAM for Westinghouse Plants, NS-TMA-2182, Letter Anderson to Hanover, December 30, 1979.

2. Westinghouse Anticipated Transients Without Trip Analysis, WCAP-8330, August, 1974.

WESTINGHOUSE OWNERS GROUP
EMERGENCY RESPONSE GUIDELINES
CONFIGURATION CONTROL SHEET

GUIDELINE DESIGNATOR: ECA-1

GUIDELINE TITLE: Anticipated Transients Without SCRAM

REVISION: Basic DATE: September 1, 1981

The guideline described above has been reviewed and approved for implementation by the Westinghouse Owner's Group Procedures Subcommittee and the Westinghouse Nuclear Technology Division.

NOTICE: THIS GUIDELINE REVISION IS THE ORIGINAL ISSUE OF GENERIC GUIDANCE ON ITS SUBJECT MATTER FOR THE EMERGENCY RESPONSE GUIDELINE SET. ANY GENERIC GUIDANCE ON THIS SUBJECT BEARING AN ISSUE DATE EARLIER THAN SEPTEMBER 1, 1981 IS SUPERSEDED BY THE EMERGENCY RESPONSE GUIDELINE SET.

File this sheet with the approved version of this guideline in your Emergency Response Guideline set.

Roger H. Newton
Chairman, Procedures Subcommittee
Westinghouse Owner's Group

Mark E. Stell
Manager, Standard Plant Engineering
Westinghouse Nuclear Technology Div.

SALEM GENERATING STATION

INSTRUCTOR LESSON PLAN

TITLE: ATWT

LESSON NO.: ____

DURATION: ____

REVISION NO.: 0

DATE: 3-08-83

SUBMITTED: Rick Sweeney

DATE: 3-08-83

APPROVED: [signature]

DATE: 3-8-83

NOTES

III. Feb. 22, 1983 Transient

At 2155 with reactor @ 20% Group Bus 'F' was in the process of being transferred from the SPT to the APT. Due to a faulty limit switch on the APT bkr it prevented the closing coil from energizing, resulting in a de-energized bus. Most important load dropped was #13 RCP.

Being < 36% power no auto Rx/Turbine occurred as is designed.

Another load lost was 14 MAC panel which dropped control power to #12 SGFP. Supervisor noticing #13 SG level dropping rapidly ordered that the unit be manually tripped. Other events took place during this transient; the one of concern at this particular point is when did the reactor actually trip?

TP-1

000 => 21:56:35

1163 > 21:56:54.4 1163/60 = 19.4 sec.
Rx trip should have occurred due to Lo-Lo level in #13 S/G

1381 => 21:56:58 1381/60 = 23 sec.
Operator went to trip with W switch

1385 => 21:56:58.1 sec. 1385/60 = 23.08
Rx trip bks open

This was initially not picked up due to other numerous events that had occurred due to dropping of a bus; swapover of the 1B vital bus to the #12 SPT, acutation of S.I.; lifting of the PZR PORV's; no spray flow, etc.

2/20/83 #3)

Rx TRIP / ST

```
SEQ OF EVENTS AT 21:56:35
0000* V0327D=1 13 RCP BUS UNDER V PRT TRP SET
0002* Y0322D=1 13 RCP UNDER FREQ PRT TRP SET
0042* F0441D=1 13 RCL LO F 2 PRT TRP SET
0043* F0440D=1 13 RCL LO F 1 PRT TRP SET
0044* F0442D=1 13 RCL LO F 3 PRT TRP SET
0051* F0440D=1 13 RCL LO F 1 PRT TRP SET
0051* F0442D=1 13 RCL LO F 3 PRT TRP SET
0073* Y2607D=1 12 SGFF TURBINE HRH STOP VA CLOSED
0075* L0441D=1 13 STM GEN LO LVL 4 PRT TRP SET
1137* L0445D=1 13 STM GEN LO LO L 4 PRT TRP SET
1137* L0446D=1 13 STM GEN LO LVL 3 PRT TRP SET
1163* L0446D=1 13 STM GEN LO LO L REACTOR TRIP
1163* L0443D=1 13 STM GEN LO LO L 1 PRT TRP SET
1168C Y2605D=1 11 AUX FW PUMP START
1168C Y2606D=1 12 AUX FW PUMP START
1170* L0444D=1 13 STM GEN LO LO L 3 PRT TRP SET
1381C Y0005D=0 REACTOR MANUAL TRIP 2 MT TRP
1385* Y2003D=1 TURBINE TRIP TRIP
1385* Y0006D=0 REACTOR MAIN TRIP BKR A TRIP
1386* Y0007D=0 REACTOR MAIN TRIP BKR B TRIP
```

21:56:58 Rx Trip

21:56:59 Turb Trip

```
SEQ OF EVENTS AT 21:56:59
0000* Y2005D=1 TURBINE REMOTE EMERG TRIP TRIP
0000C Y0339D=1 TURBINE STOP VA 13 CLOSED
0002C Y0341D=1 TURBINE STOP VA 11 CLOSED
0004C Y0344D=1 TURBINE STOP VA 14 CLOSED
0006* Y0370D=1 REACTOR TURBINE TRIP +EZ TRIP
0006* Y0310D=1 PWR RNG CHAN HI Q RATE REACTOR TRIP
0008* Y0320D=1 PWR RNG CHAN 1 HI Q RATE PRT TRP SET
0008* Y0350D=1 PWR RNG CHAN 4 HI Q RATE PRT TRP SET
0009* Y0330D=1 PWR RNG CHAN 2 HI Q RATE PRT TRP SET
0009* Y0340D=1 PWR RNG CHAN 3 HI Q RATE PRT TRP SET
0016* N0011D=0 PWR RNG 1 P10 PRT PRM RESET
0017* N0013D=0 PWR RNG 3 P10 PRT PRM RESET
0017* N0014D=0 PWR RNG 4 P10 PRT PRM RESET
0017C N0016D=0 PWR RNG LO Q 7 TRP BLK RESET
0017C N0015D=0 PWR RNG LO Q 1 TRP BLK RESET
0018* N0012D=0 PWR RNG 2 P10 PRT PRM RESET
0022C Y0372D=1 TURBINE STOP VA 12 CLOSED
0048* F0466D=1 14 STM LNE HI F 1 SI PRT TRP SET
0048* F0467D=1 14 STM LNE HI F 2 SI PRT TRP SET
0073* F0466D=1 14 STM LNE HI F 1 SI PRT TRP SET
0074* F0426D=1 12 STM LNE HI F 1 SI PRT TRP SET
0074* F0427D=1 12 STM LNE HI F 2 SI PRT TRP SET
0074* F0467D=1 14 STM LNE HI F 2 SI PRT TRP SET
```

```
SEQ OF EVENTS AT 21:57:00
0000* F0407D=1 11 STM LNE HI F 2 SI PRT TRP SET
0000* F0406D=1 11 STM LNE HI F 1 SI PRT TRP SET
0000* F0446D=1 13 STM LNE HI F 1 SI PRT TRP SET
0001* F0447D=1 13 STM LNE HI F 2 SI PRT TRP SET
0010* F0465D=1 14 STM GEN LO F 2 PRT TRP SET
0012* F0425D=1 12 STM GEN LO F 1 PRT TRP SET
```

OPERATIONS DEPARTMENT

REPORT ON REACTOR TRIP/SAFETY INJECTION

February 22, 1983

At 2036 hours, February 22, 1983, Salem Unit 1 was synchronized and the turbine loading was increasing in accordance with established Operations Department procedures. At 20 % reactor power, approximately 200 Mwe electrical load, procdure step 5.34 of IOP-3, Hot Standby to Minimum Load, required that the 4Kv Group Bus power supplies be transferred from the Station Power Transformers to the Auxiliary Power Transformer.

The 1G 4Kv Group Bus was successfully transfered and at 2155 hours the operators attempted to transfer the 1F 4kv Group Bus to the Auxiliary Power Transformer. Upon depressing the close push button for the Auxiliary Power Transformer infeed breaker, the Station Power Transformer infeed breaker opened, however, the infeed breaker from the Auxiliary Power Transformer failed to close. The failure of the Auxiliary Power Transformer to close caused the 1F 4Kv Group Bus to deenergize. The opening of the Station Power Transformer Breaker prior to the closure of the Auxiliary Power Transformer Breaker is in accordance with the power transfer design scheme.

Upon the loss of power to the 1F 4Kv Group Bus all equipment powered from the bus was deenergized. The most important equipment deenergized was 13 Reactor Coolant Pump and 14 MAC 115 volt distribution panel. The control room lighting was also lost. However, this did not present a problem as the emergency lighting provided sufficent light.

There was no immediate Turbine/Reactor trip on loss of reactor coolant flow to the 13 reactor coolant loop because the Reactor Protection System allows single loop loss of flow below 36 % power. The loss of 14 MAC panel, however, caused 12 Steam Generator Feed Pump to trip due to the loss of feed pump control power. The loss of the feed pump interrupted the feedwater flow to all steam generators and steam generator levels started to immediately decrease. The operators noted that 13 Steam Generator level was decreasing rapidly due to the combined effects of the loss of feedwater flow and the shrink in the steam generator due to loss of reactor coolant flow. In addition to the loss of the feed pump, a significant amount of instrumentation lost power when 14 MAC panel was de-energized. This caused the instruments to fail to the mid-scale position.

The supervisor in the control room at the time of incident realized that with the rate of decrease in 13 Steam Generator level it would not be possible to bring the reactor to less than 10 % power in a controlled manner so he ordered the Unit to be manually tripped. At 2157 hours, simultaneously, with the

issuance of the order, the reactor was automaticly tripped by the Reactor Protection System on 13 Steam Generator LO-LO level.

All equipment functioned as designed when called upon by the Reactor Trip. The Reactor Trip/Turbine Trip set up the automatic transfer circuit for the group buses to be transfered from the Auxiliary Power Transformer to the Station Power Transformer. The 1H and 1E 4Kv Group were already supplied power from the Station Power Transformers as they were never swapped over to the Auxiliary Transformer. The 1G 4Kv Group Bus swapped over as per design. The transfer scheme also provided a close signal to the Station Power infeed breaker to the 1F 4Kv Group Bus, causing the breaker to close and the bus to become re-energized.

The simultaneous starting of all the connected loads on the 1F 4Kv Group Bus caused the 11 Station Power Transformer voltage to decrease. The decrease in the transformer voltage was sensed by the second level of undervoltage protection on the 1B 4Kv Vital Bus and the bus was automatically swapped over to 12 Station Power Transformer. The locked rotor relay protection for 13 Reactor Coolant Pump operated shortly after the bus was reenergized due to the inability of the pump to start without the aid of the lift pump and the low voltage condition on the bus.

At 2204 hours, an automatic Safety Injection occured because the steam pressure in 13 Steam Generator was 100 psi less then the steam pressure in any other 2 steam generators. The cause of the steam pressure decreasing 100 psi was due to the combined effects of the addition of cold feedwater by the Auxiliary Feedwater Pumps which started automatically on response to the LO-LO level in 13 Steam Generator, the cooling effect cause by the draw off of steam from the 11 and 13 Steam Generator by the turbine driven auxiliary feedwater pump, the reduced circulation in the Reactor Coolant System due to the loss of 13 Reactor Coolant Pump and the fact that the MSIV's had been closed to control the decrease in Tave. The closure of the MSIV's to limit the cooldown following a reactor trip is standard practice early in core life when there is little or no decay heat available to maintain RCS temperature.

All required Safeguards Equipment functioned as designed, causing the pressurizer level to increase during the Safety Injection. As pressurizer level increased the bubble was compressed and pressurizer pressure increased causing the Power Operated Relief Valves to relieve to the Pressurizer Relief Tank. The increase in pressurizer pressure would normally be held below the set point of the Power Operated Reliefs by the pressurizer spray valves. However, in this case no spray flow was available since 11 and 13 Reactor Coolant Pumps were out of service. No.11 Reactor Coolant Pump had tripped at 2206 for no apparent reason..

The operators responded to the Safety Injection in accordance with the Emergency Instructions for Safety Injection. The duration of the Safety Injection was 7 minutes. Upon establishment of the Safety Injection reset criteria by the operators, the Safety Injection was terminated at 2211 hours in accordance with procedures and the Unit was returned to a stable shutdown condition.

An investigation was conducted by maintenance and relay department personnel into the incident. The investigation revealed a faulty 52 I/S limit switch in the 1F 4Kv Group Bus - Auxiliary Power Transformer infeed breaker. This switch is normally closed when the breaker is fully racked up and is wired in series with the closing coil of the breaker. The faulty limit switch therefore prevented the closing coil from energizing when the transfer control scheme called for the breaker to close.

The investigation did not reveal any apparent problem with the relay protection for the 11 Reactor Coolant Pump nor did it reveal any other reason for the tripping of the pump.

The Engineering Department has been requested through a Design Change Request to provide undervoltage lockout relay protection for all Reactor Coolant Pump Motors. This will provide a breaker trip/lockout of the coolant pumps in the event of a total loss of voltage on the supplying bus. This will prevent the uncontrolled starting of the Reactor Coolant pumps upon bus re-energization.

SALEM GENERATING STATION

INSTRUCTOR LESSON PLAN

TITLE: ATWT

LESSON NO.: ____

DURATION: ____

REVISION NO.: 0

DATE: 3-08-83

SUBMITTED: Rick Sweeney

DATE: 3-08-83

APPROVED: [signature]

DATE: 3-8-83

NOTES

IV. Reactor Trip Feb. 25, 1983

- At 1200 on Feb. 24 the turbine was taken off line to perform OST. test successfully.
- At 0012 the generator sync to grid with power @ 14%.
- Probs. experience with #12 S/G level and the S/G reached lo-lo level rx trip setpoint of 18%. The logic for the rx trip being 2/3 detectors on 1/4 S/G should have caused the trip.
- The first out OHA F-10 actuated "S/G 12 Lo-Lo Level R.T." However, the OHA F-46 never actuated "Rx trip Turbine Trip". This annunciator is actuated by P-4 which is actuated by having 'A' and 'A' bypass bkr open or 'B' and 'B' bypass breaker open.
- In approx. 25 sec. the operator recognized Rx and turbine did not trip and performed a manual reactor trip.
- The lo-lo level signal did leave the SSPS cabinets because the MDEFP's did start.
- Alert was declared at 0130 and terminated at 0200.

  10CFR50.72 → significant event → notification w/in 1 hour by phone.

0021:38 #12 S/G Lo-Lo level channel #4
0021:43 #12 S/G Lo-Lo level Rx. trip (Ch. #1)
322 0021:43 The SSPS called for Rx trip
0021:43½ #11/12 AFP start

1820 0022:08 Operator went to trip with trip switch
0022:08.4 Turbine Trip signal
0022:08.4 Rx main trip bkr 'A' tripped
0022:08.4 Rx main trip bkr 'B' tripped

From the time that the SSPS called for a reactor trip to the time that the operator turned the trip switch was:

1820 - 322 = 1498/60 = 24.96 sec.

NOTES

There was a time lag in which the event occurred and when the NRC was informed. The S^3 anticipating the NRC question on how do you know it was an actual ATWT had the I&C Dept. run various tests to ensure it was a breaker failure and not a SSPS failure.

REACTOR TRIP FEBRUARY 25,1983

On Februrary 24,1983 Unit 1 was in the startup phase following a refueling outage. At approximately 1200 the turbine was taken off the line in order to complete the overspeed test. Following the successful completion of the test the unit was returned to power. At 0012 on February 25,1983 the generator was synchronized to the grid. Reactor power was approximately 14%. Problems were experienced controlling the level in No.12 Steam Generator and as a result the level decreased to below the Lo-Lo Level Trip Setpoint of 18%. A reactor trip signal was generated by the Reactor Protection System, however, the Reactor Trip Breakers failed to open. The operator, upon surveying the control room indications as directed by EI-I-4.3, Reactor Trip, observed there were no Rod Bottom Lights illuminated, the Individual Rod Position Indications still showed the control rods to be withdrawn and the turbine did not indicate it was tripped. Upon recognition of these facts, the operator concluded that the Reactor Trip had failed to initiate and manually initiated a trip utilizing the trip handle on the console. This ocurred approximately 24.8 seconds after the Reactor Trip signal was gernerated,(see the attached sequence of events printout attached) and resulted in a successful reactor trip. All automatic functions associated with the reactor trip were then verified to have ocurred. (All control rods were fully inserted and the turbine tripped.)

The operator had concluded that a trip was warranted because the actual level indicated in No.12 Steam Generator was below the trip setpoint of 18% and all of the alarms associated with the Steam Generator levels, both on the console and the Overhead Alarms were illumiated. Also, the Motor Driven Auxiliary Feedwater Pumps had started automatically. These pumps start when the level in any Steam Generator decreases to less than 18%.

As directed by the Emergency Plan Procedure EP-I-0 Part 2 Item 16, an Alert Classification was declared at 0130. All notifications were made in accordance with EP-I-2, Alert. The event was terminated at 0200.

Attached are copies of the recorder charts for all four Steam Generator Levels, both narrow and wide range.

F

REACTOR TRIP FIRST OUT						TURBINE TRIP FIRST OUT	
PR GH RANGE GH FLUX AC TRIP 1	RC LO FLOW OR RCP BKR OPEN & P-8 REAC TRIP 2	REACTOR COOLANT HI PRESS REAC TRIP 3	STM GEN II LOW-LOW LEVEL REAC TRIP 4	STM GEN II FEEDWATER LO LVL & FLO REAC TRIP 5	STM DIFF P LOW P1 SI REAC TRIP 6	CONDENSER VACUUM LOW TURB TRIP 37	STM GEN II HI-HI LEVEL TURB TRIP 38
PR N RANGE GH FLUX AC TRIP 7	RC LO FLOW OR RCP BKR OPEN & P-7 REAC TRIP 8	REACTOR COOLANT LO PRESS REAC TRIP 9	STM GEN 12 LOW-LOW LEVEL REAC TRIP 10	STM GEN 12 FEEDWATER LO LVL & FLO REAC TRIP 11	STM DIFF P LOW P2 SI REAC TRIP 12	TURBINE BEARING LOW OIL TURB TRIP 39	STM GEN 12 HI-HI LEVEL TURB TRIP 40
IR GH FLUX AC TRIP 13	4KV GRP BUSES UNDERFREQ REAC TRIP 14	PRESSURIZER HIGH LEVEL REAC TRIP 15	STM GEN 13 LOW-LOW LEVEL REAC TRIP 16	STM GEN 13 FEEDWATER LO LVL & FLO REAC TRIP 17	STM DIFF P LOW P3 SI REAC TRIP 18	TURBINE THRUST BRG FAIL 41 TURB TRIP	STM GEN 13 HI-HI LEVEL 42 TURB TRIP
SR GH FLUX 19 AC TRIP	4KV GRP BUSES UNDERVOLT 20 REAC TRIP	PZR LO LVL & RC LO PRESS SI 21 REAC TRIP	STM GEN 14 LOW-LOW LEVEL 22 REAC TRIP	STM GEN 14 FEEDWATER LO LVL & FLO REAC TRIP 23	STM DIFF P LOW P4 SI REAC TRIP 24	TURBINE OVERSPEED TURB TRIP 43	STM GEN 14 HI-HI LEVEL TURB TRIP 44
PR NEUTRON UX RATE AC TRIP 25	CONTAINMENT PRESS HIGH SI REAC TRIP 26	27	STM HI FLO & LO PRESS ISOL SI REAC TRIP 28	29	TURB TRIP & P-7 REAC TRIP 30	E-H DC PWR FAIL TURB TRIP 45	REACTOR TRIP TURB TRIP 46
ERPOWER ΔT AC TRIP 31	OVERTEMP ΔT REAC TRIP 32	33	MANUAL SI ACTUATION REAC TRIP 34	35	MANUAL REAC TRIP 36	GENERATOR PROTECTION TURB TRIP 47	MANUAL TURB TRIP 48

Rev. 1

PSEG

SALEM GENERATING STATION

INCIDENT REPORT

1.1 REPORT NO. _____

SECTION 1 – INITIATION 1.2 DATE 3/25/83 1.3 TIME 0021

1.4 REPORT SUBJECT

UNIT #1 REACTOR TRIP (#2 S/G LOW LOW LEVEL) – AT WAS MANUAL REACTOR TRIP AFTER AUTOMATIC TRIP DID NOT OCCUR

1.5 UNIT 1 1.6 MODE 1 1.7 RX POWER 12% 1.8 UNIT LOAD 70 MW

1.9 DESCRIPTION OF EVENTS: ACTION STATEMENT NO. A.S. 3.3.1.1 ENTERED N/A TERMINATED N/A

AT 0021, UNIT #1 RECIEVED A RX. TRIP SIGNAL DUE TO ACTUAL LOW LOW LEVEL ON #2 STEAM GENERATOR. THE OVERHEAD ANNUNCIATOR ALARMED AND THE TRIP CONDITION (#2 S/G LOW-LOW LEVEL) EXISTED, HOWEVER THE REACTOR TRIP BREAK DID NOT TRIP OPEN.

REALIZING THE REACTOR WAS STILL CRITICAL AND A TRIP CONDITION DID EXIST, T CONTROL OPERATOR IMMEDIATELY MANUALLY TRIPPED THE REACTOR AT THE CONTROL CONSOLE

THE CONTROL OPERATORS RE-CYCLED FROM THE MANUAL TRIP AND ARE CURRENTLY M THE UNIT IN HOT STANDBY (MODE 3).

I&C WAS IMMEDIATELY CALLED AND THEY ARE CURRENTLY INVESTIGATING WHY THE TRIP BREAKERS DID NOT AUTOMATICALLY TRIP OPEN.

AFTER REVIEWING THE ACCIDENT CLASSIFICATION GUIDE, THE SENIOR SHIFT SUPERVISOR EN EPI-2 (ALERT) @ 0130 DUE TO THE FACT THE REACTOR PROTECTION SYSTEM FAILED TO INI THE AUTOMATIC TRIP. THE ALERT WAS TERMINATED AT 0200. ALL CALLS WERE MADE IA EPI-2

1.10 RESULTS OR POSSIBLE RESULTS OF INCIDENT:

FAILURE OF REACTOR PROTECTION SYSTEM TO INITIATE AND COMPLETE A TRIP.

1.11 REPORTED TO SR. SHIFT SUPERVISOR BY _____

1.12 NOTIFIED OF THE INCIDENT: ☒ OPERATING ENGINEER OR ☐ _____ 0132 TIME

1.13 REPORT SUBMITTED [signature] 3/25/83
SR. SHIFT SUPERVISOR DATE

P.O.

SECTION 2 – FOLLOW-UP

2.1 SOAE NOTIFIED DATE _____

2.2 MAJOR CAUSE: ☐ EQUIPMENT FAILURE ☐ PROCEDURE INADEQUACY ☐ PERSONNEL ERROR ☐ _____

2.3 INCIDENT CLASSIFICATION: ☒ REPORTABLE LER # _____ ☐ NOT REPORTABLE

2.4 JUSTIFICATION OF CLASSIFICATION:

PROMPT NOTIFICATION WITH WRITTEN FOLLOWUP

6.9.1.8 a

2.5 INCIDENT AND PROCEDURE REVIEW COMPLETE _____

2.6 _____ OPERATING ENGR. _____ DATE _____ SOAE _____ DATE _____ CHIEF ENGR.

DISTRIBUTION: MANAGER – SGS SHIFT SUPV'S. POPICE SOAE

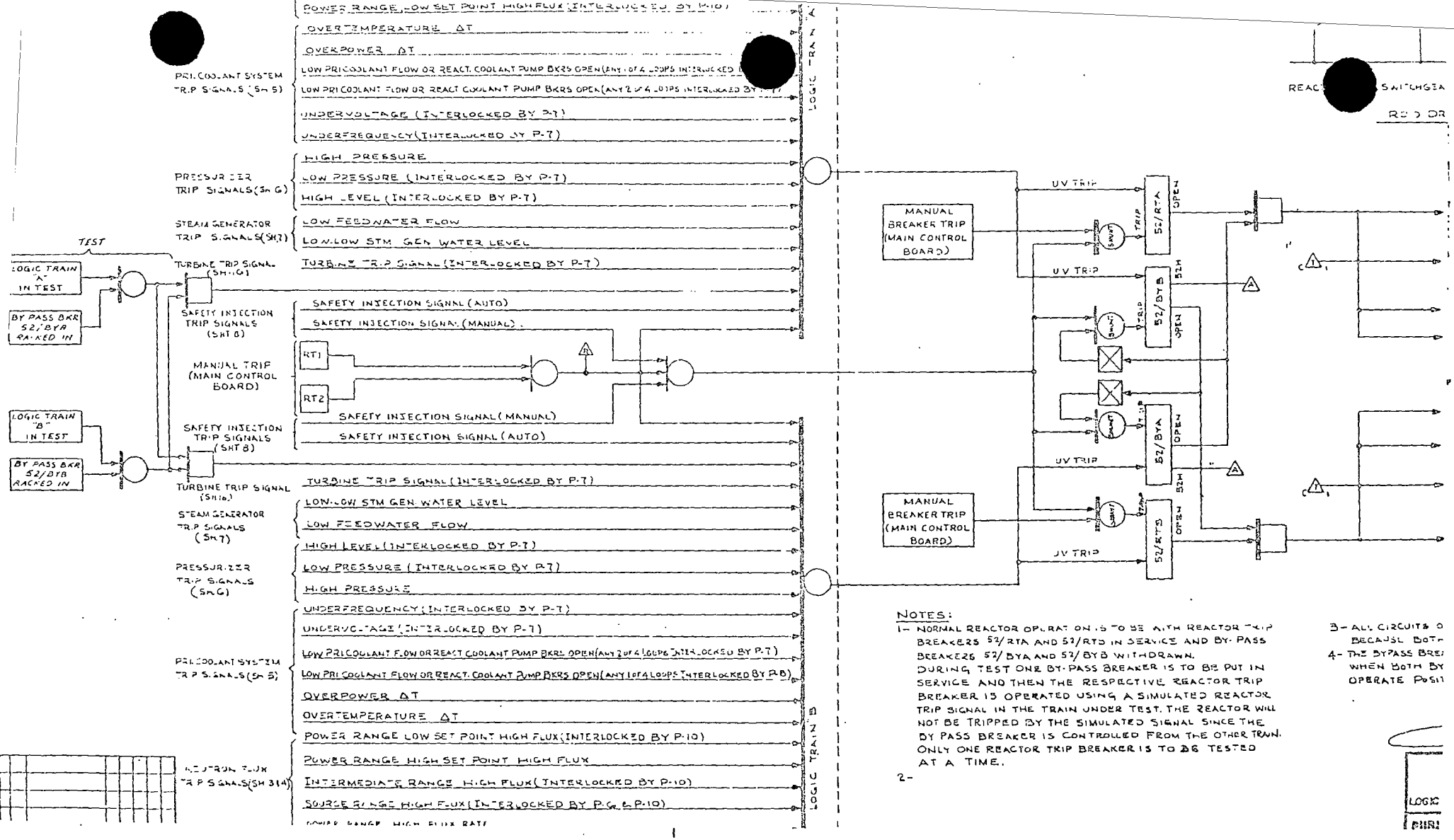

NOTES:

1- NORMAL REACTOR OPERATION IS TO BE WITH REACTOR TRIP BREAKERS 52/RTA AND 52/RTB IN SERVICE AND BY-PASS BREAKERS 52/BYA AND 52/BYB WITHDRAWN. DURING TEST ONE BY-PASS BREAKER IS TO BE PUT IN SERVICE AND THEN THE RESPECTIVE REACTOR TRIP BREAKER IS OPERATED USING A SIMULATED REACTOR TRIP SIGNAL IN THE TRAIN UNDER TEST. THE REACTOR WILL NOT BE TRIPPED BY THE SIMULATED SIGNAL SINCE THE BY PASS BREAKER IS CONTROLLED FROM THE OTHER TRAIN. ONLY ONE REACTOR TRIP BREAKER IS TO BE TESTED AT A TIME.

2-

3- ALL CIRCUITS O
BECAUSE BOTH

4- THE BYPASS BRE
WHEN BOTH BY
OPERATE POSI

3/25/83
RX Trip

Unit #1
down stand
gaps
[illegible]

0021 9 12 STM GEN LO LO L 3 FRT TRF L0424D= 1,SET

0021 9 12 STM GEN LO LO L 4 FRT TRF L0425D= 1,SET

0021 9 12 STM GEN LO LO L 1 FRT TRF L0423D= 1,SET

SEQ OF EVENTS AT 00/21:38

0922 1 REACTOR TRIP
0000@ L0425D=1 12 STM GEN LO LO L 4 FRT TRF SET
0322@ L0426D=1 12 STM GEN LO LO L REACTOR TRIP
0322@ L0424D=1 12 STM GEN LO LO L 3 FRT TRF SET
0328C Y2603D=1 11 AUX FW PUMP START
0328C Y2604D=1 12 AUX FW PUMP START
0607@ L0423D=1 12 STM GEN LO LO L 1 FRT TRF SET
0960@ L0424D=1 12 STM GEN LO LO L 3 FRT TRF SET

0922 0 CONTROL ROD BNK SEQ ERROR
1820C Y0004D=0 REACTOR MANUAL TRIP 1 NT TRF
1824@ Y2003D=1 TURBINE TRIP TRIP
1824@ Y0006D=0 REACTOR MAIN TRIP BKR A TRIP
1824@ Y0007D=0 REACTOR MAIN TRIP BKR B TRIP
1847@ Y2005D=1 TURBINE REMOTE EMERG TRIP TRIP
1847C Y0499D=1 TURBINE STOP VA 11 CLOSED
1840@ Y0004D=1 REACTOR MANUAL TRIP 1 TRIP
1843@ N0013D=0 PWR RNG 3 F10 FRT FRN RESET
1850C Y0392D=1 TURBINE STOP VA 13 CLOSED
1850@ N0012D=0 PWR RNG 2 F10 FRT FRN RESET
1851@ N0011D=0 PWR RNG 1 F10 FRT FRN RESET
1851C N0014D=0 PWR RNG LO 0 2 TRF BLK RESET
1851C N0015D=0 PWR RNG LO 0 1 TRF BLK RE

C10R 1 NE TRIP 4P2 TRIP ITOM ERROR SEQ OF EVENTS AT 12:08 0000@ N0014D=0 PWR RNG 4 F10 FRT FRN RESET 1C 0380D=1 RE
00020 Y0374D=1 TURBINE STOP VA 14 CLOSED

11 & 12 STEAM GEN
WIDE RANGE LEVEL

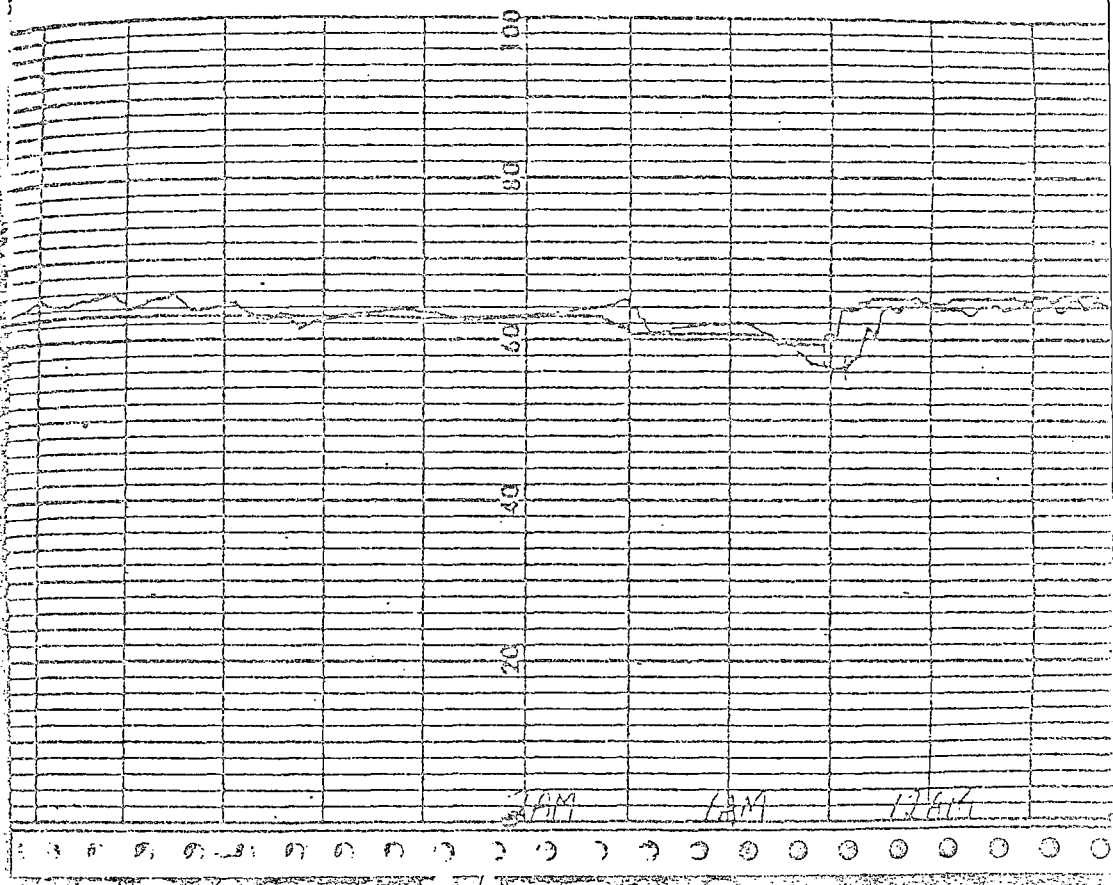

13 & 14 STEAM GE
WIDE RANGE LEVEL

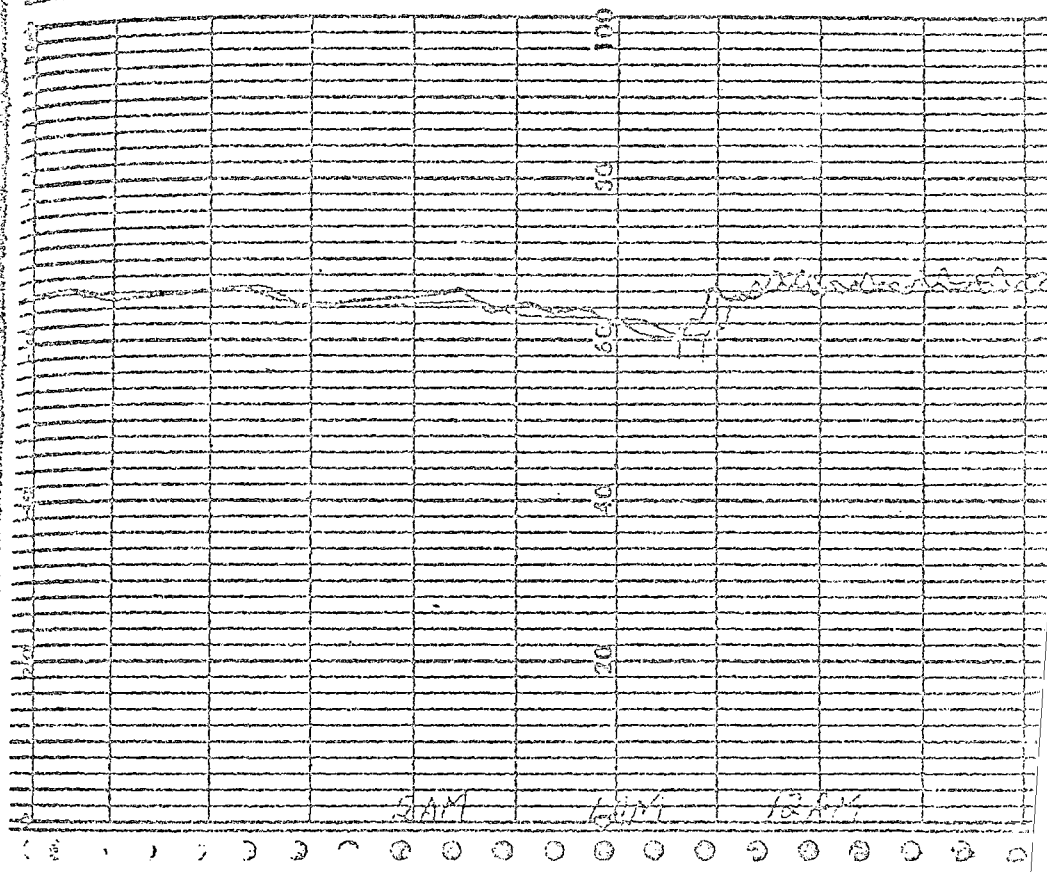

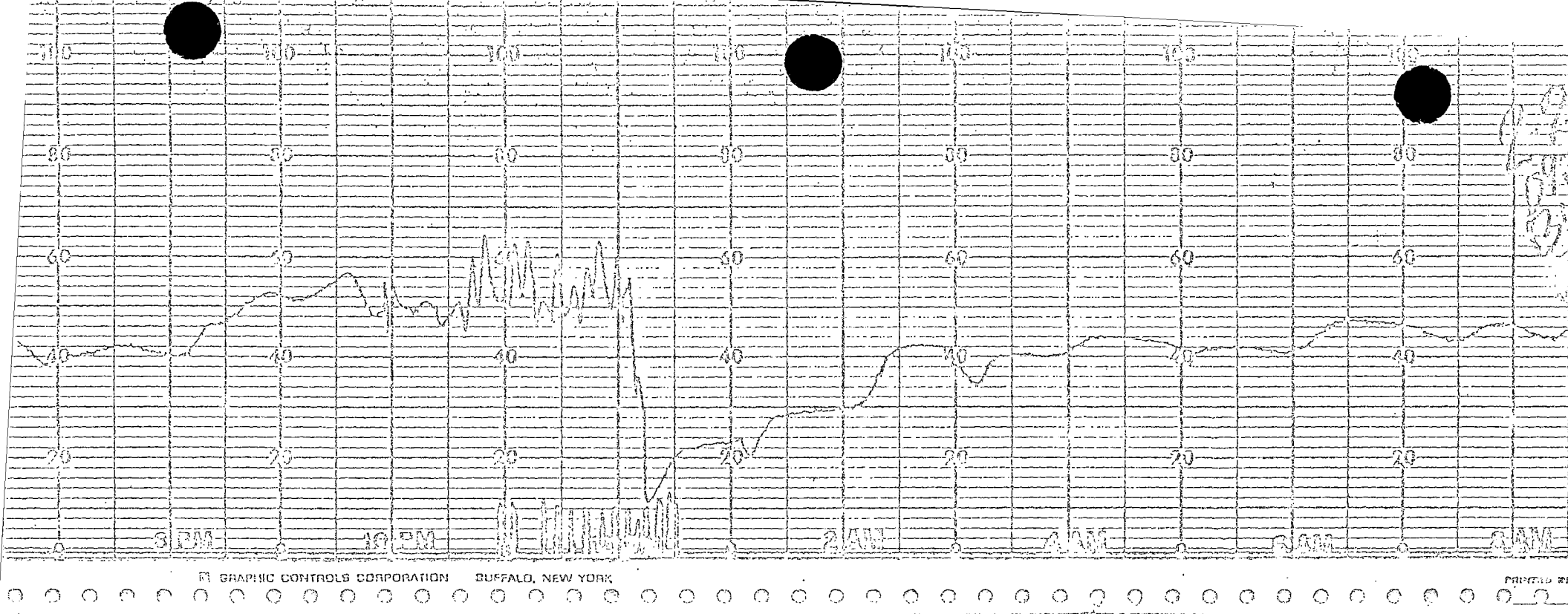

14 STEAM GEN. LEVEL

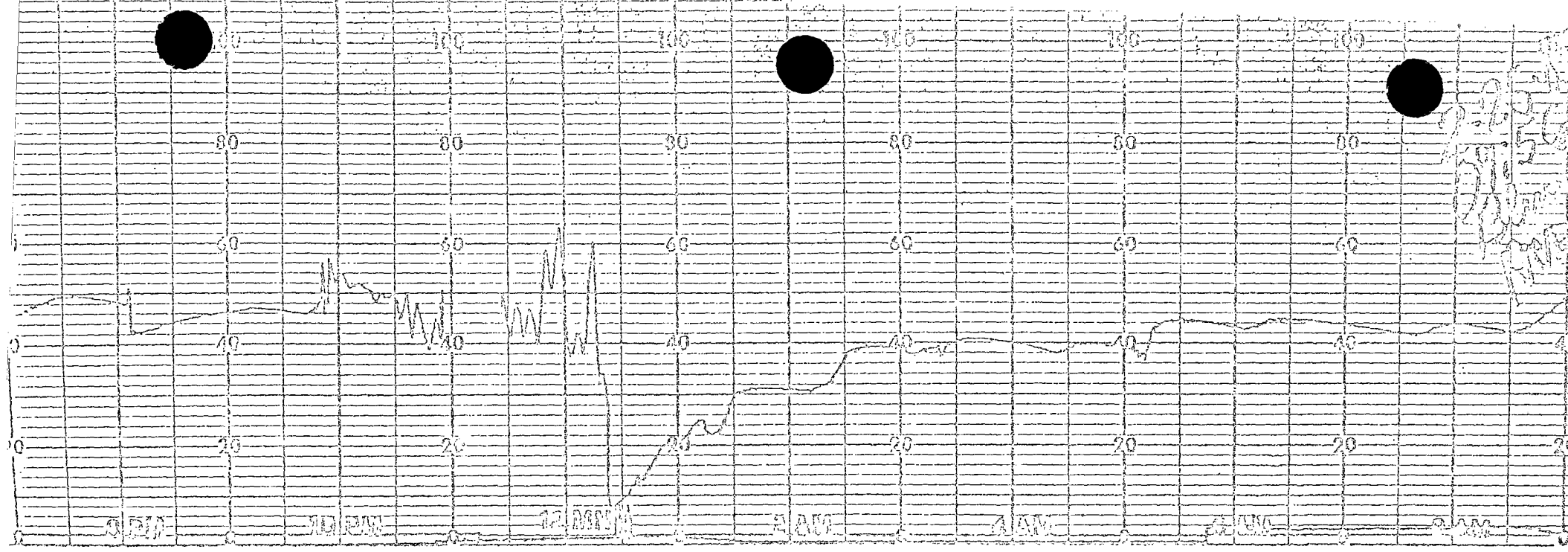

13 STEAM GEN. LEVEL

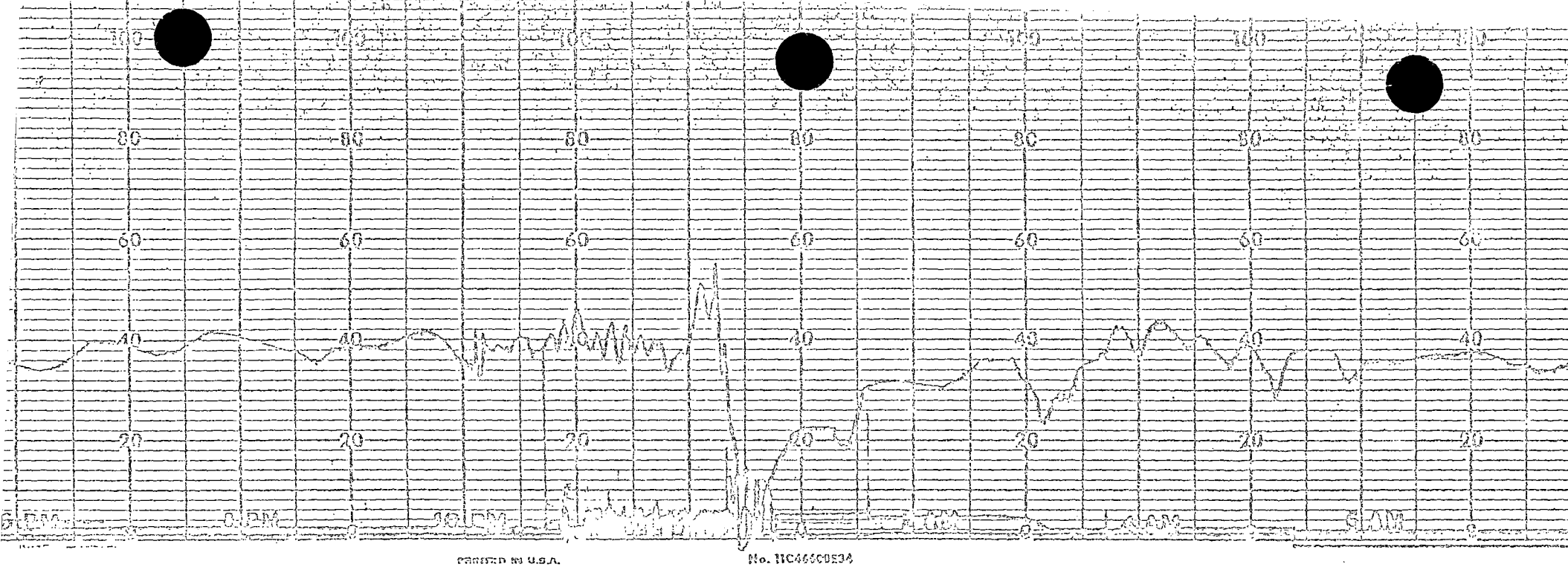

12 STEAM GEN. LEVEL

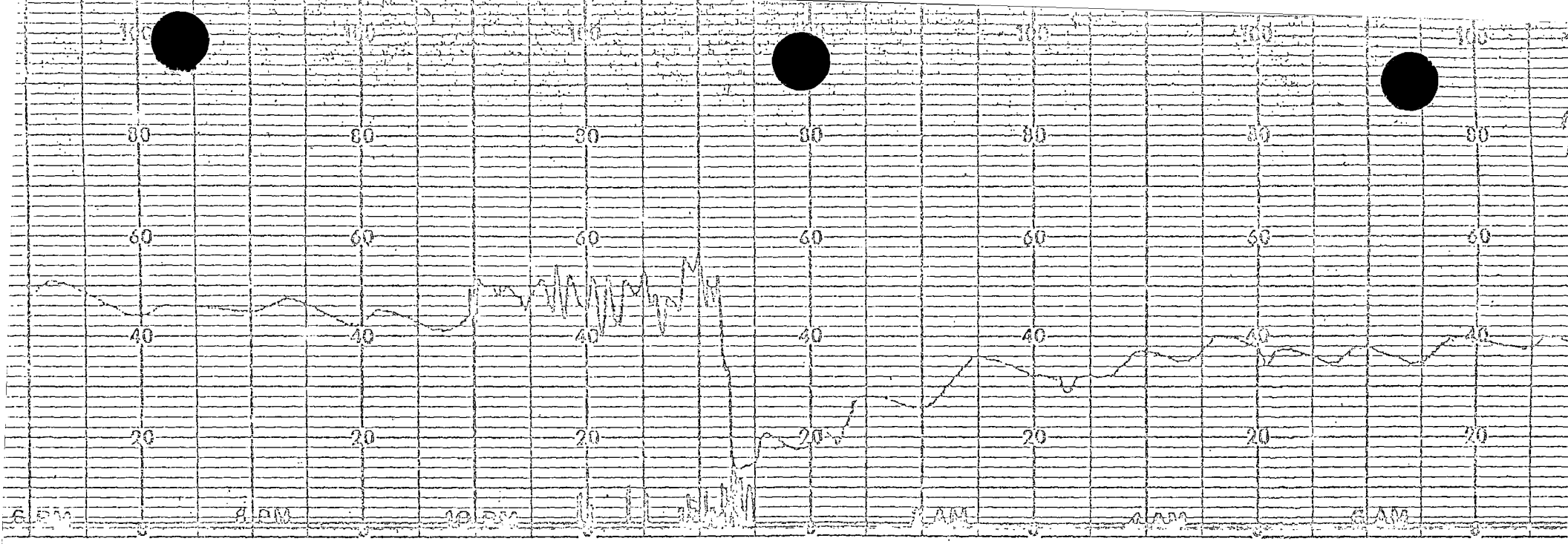

11 STEAM GEN. LEVEL

SALEM GENERATING STATION

INSTRUCTOR LESSON PLAN

TITLE: ATWT

LESSON NO.: ____

DURATION: ____

REVISION NO.: 0

DATE: 3-08-83

SUBMITTED: Rick Sweeney

DATE: 3-08-83

APPROVED: [signature]

DATE: 3-8-83

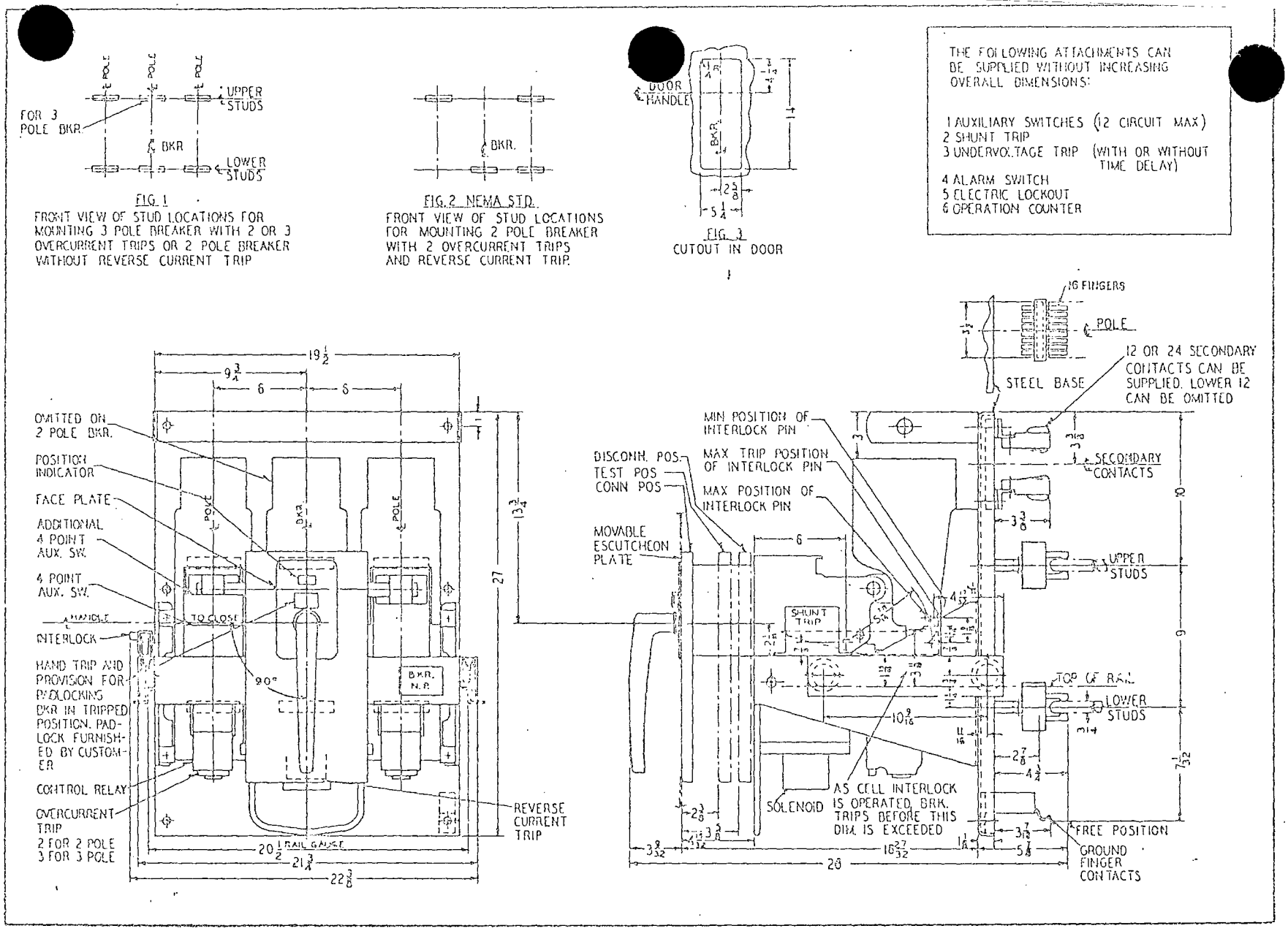

Fig. 1A - Type DB-50 Three Position Drawout Outline Dimensions

INSTRUCTOR REFERENCES:

TRAINING MATERIAL REQUIRED:

STUDENT HANDOUTS:

CLASSROOM REQUIREMENTS:

NOTES

V. DB-50 ckt. bkrs.

Fig #17

- o Operation of undervoltage trip attachment. When energized the moving core is held against the stationary core which allows the rod to keep the reset lever in the reset position. (48V DC coil) When voltage ↓ spring overcomes the magnetic attraction of the 2 cores and rotates the reset level which releases a latch pin and releases the latch. Now trip spring rotates trip lever. Thru mech. linkage bkr. opens.

Fig #16

- o Operation of Shunt trip device (125 VDC). This device also uses the moving and stationary core idea. And also uses the trip spring and trip lever. This device energizes to perform its function and is actuated thru the manual trip switches on the board as is the UV coil also.

- The reactor trip breaker pushbutton on console operates the shunt trip device.

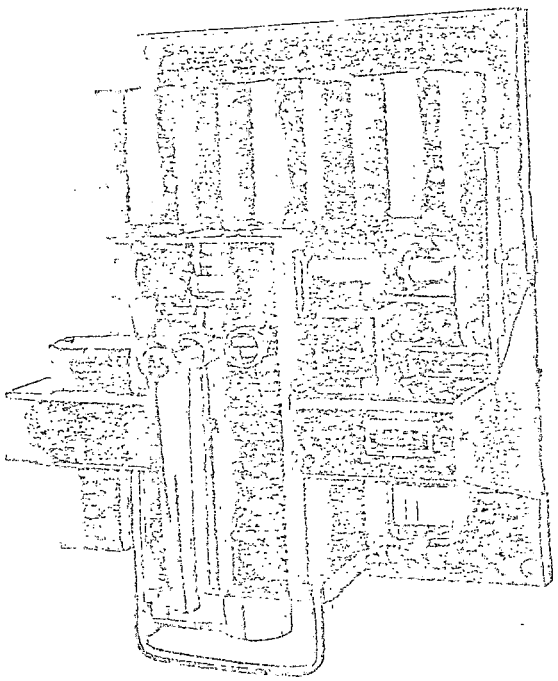

General

Type "DB" air circuit breaker is designed to give continuous and reliable service as the protective link between the power source and associated productive equipment. This breaker is built to operate with a minimum of maintenance, while at the same time its simplified construction permits maximum accessibility for inspection and adjustment when required. The ease with which attachments may be added or removed is an outstanding feature of the "DB" design.

For the greatest measure of safety to operating personnel and also to minimize maintenance requirements, the breaker should be mounted in an enclosure suitable to local operating conditions. A selection of standard enclosures is available for various applications.

IMPORTANT: To assure proper functioning, inspect each breaker at regular intervals in accordance with a systematic maintenance schedule. The frequency and character of the inspections will for the most part be determined by the severity of the duty performed. The minimum requirements, however, should consist of a light monthly inspection, with a thorough inspection semi-annually. Occasional checks on calibration as well as on coordination and freedom of all moving parts, must be included in the maintenance schedule. Consult Westinghouse engineering and service personnel for recommendations pertaining to special operating or maintenance conditions.

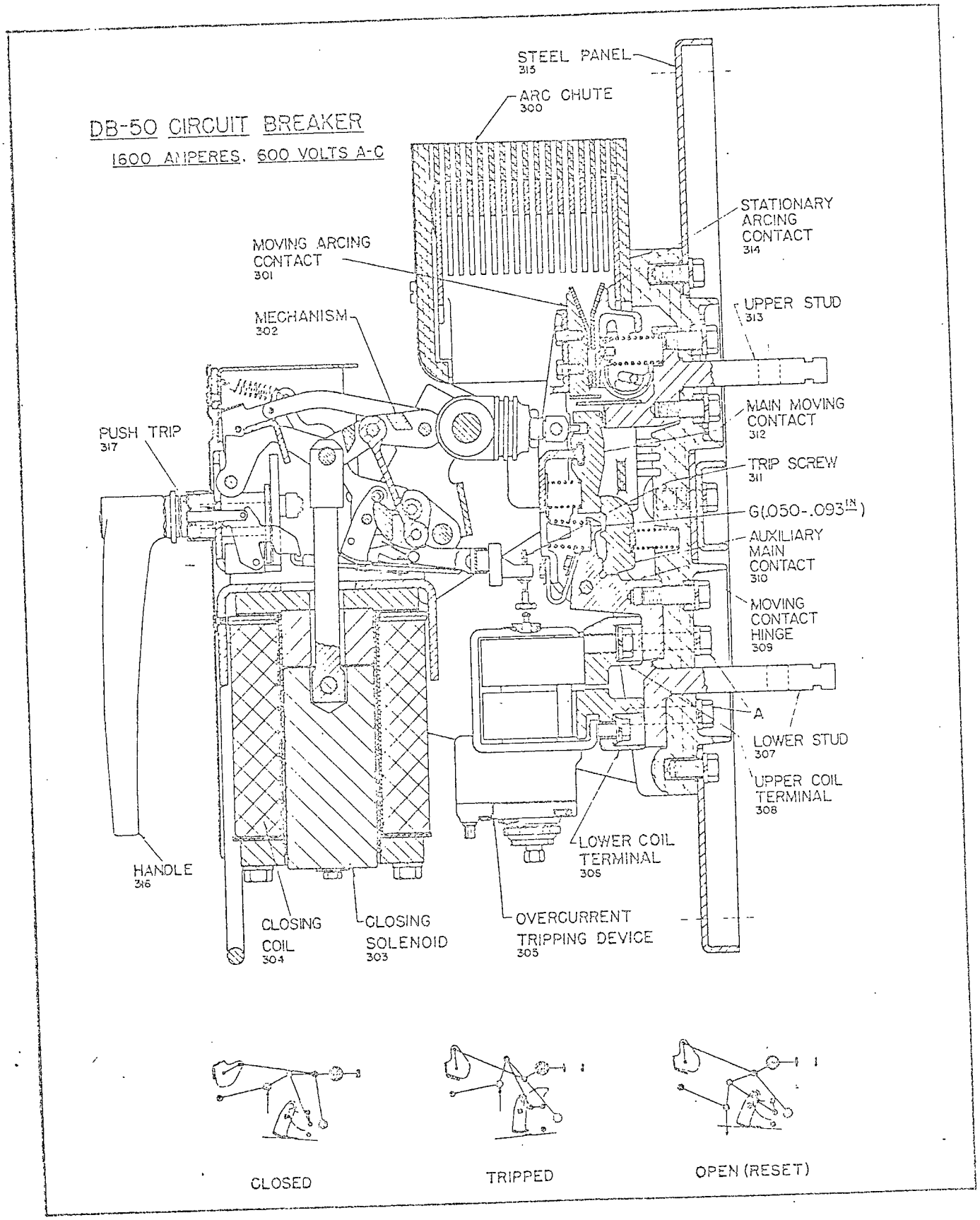

Fig. 3 - Cross-Sectional View of Type DB-50 Circuit Breaker

In replacing closing coil be sure to replace brass tube (5) so that stationary core (4) and moving core (3) are aligned in the tube. Re-assemble closing coil and details in reverse order from removal.

If the circuit breaker is permanently mounted near the floor so that the closing coil cannot be dropped far enough for removal then follow these directions. Trip breaker and remove breaker manual operating handle and breaker face plate. Disconnect closing coil leads from control circuit wiring. Take off bolts (9), washers (12), relay release arm (8), bolts (10), washers (11) and plate (2). Drop closing coil (7) with brass tube (5) so that pin (6) is exposed. Push pin (6) to right into hole on right hand side of solenoid yoke (1) and allow moving core (3) to drop into brass tube (5). Pick up closing coil with brass tube and moving core and bring out through the U-shaped foot on breaker.

Re-assemble closing coil and details in reverse order from removal. Take care to align stationary core (4) and moving core (3) in brass tube (5).

OVERCURRENT TRIPPING DEVICE

The overcurrent trip is an air delayed device that can be supplied with various rating coils ranging from 200 to 1600 amperes. The construction, except for the coils, is similar for all ratings.

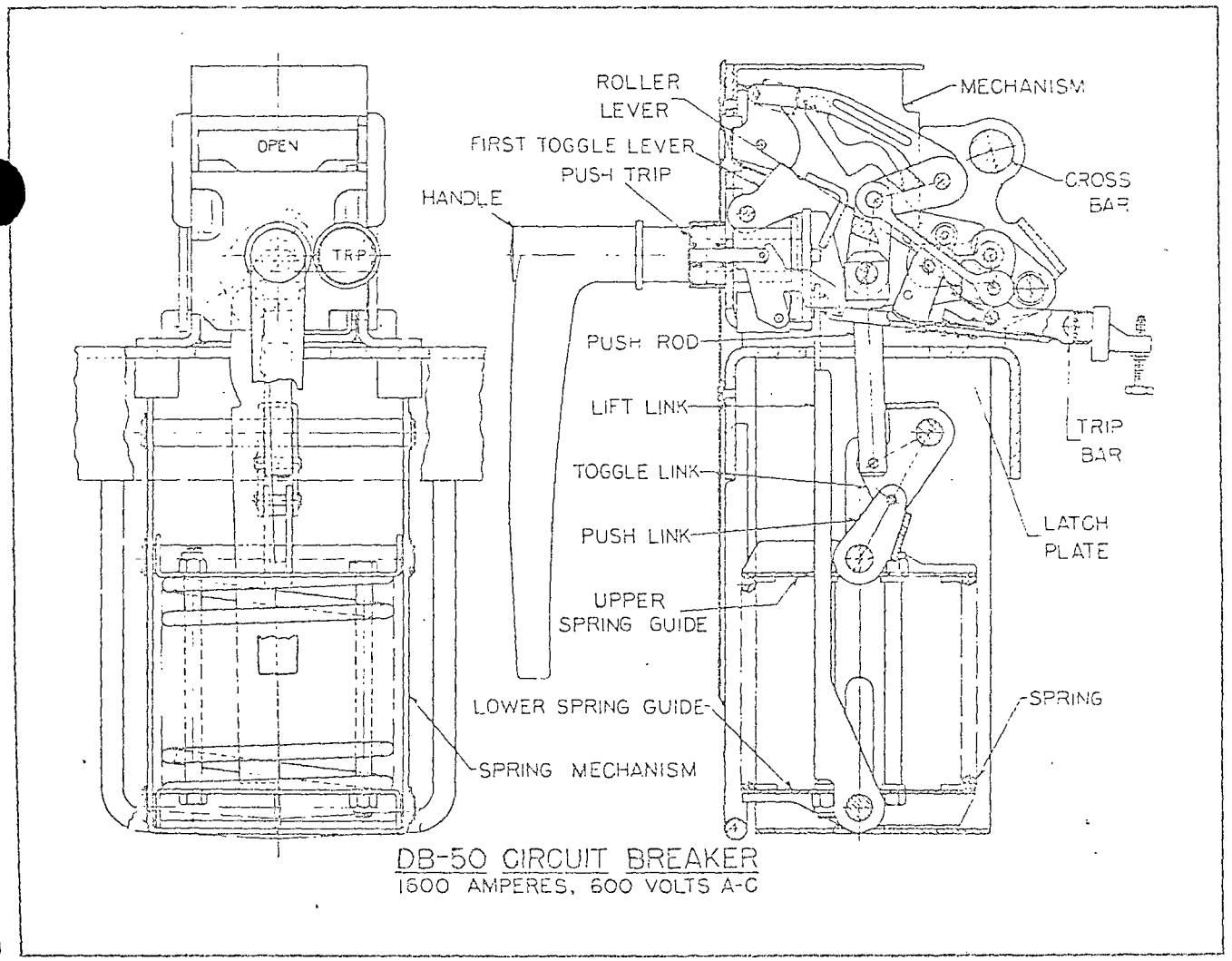

Fig. 3A - Type DB-50 Spring Closing Assembly

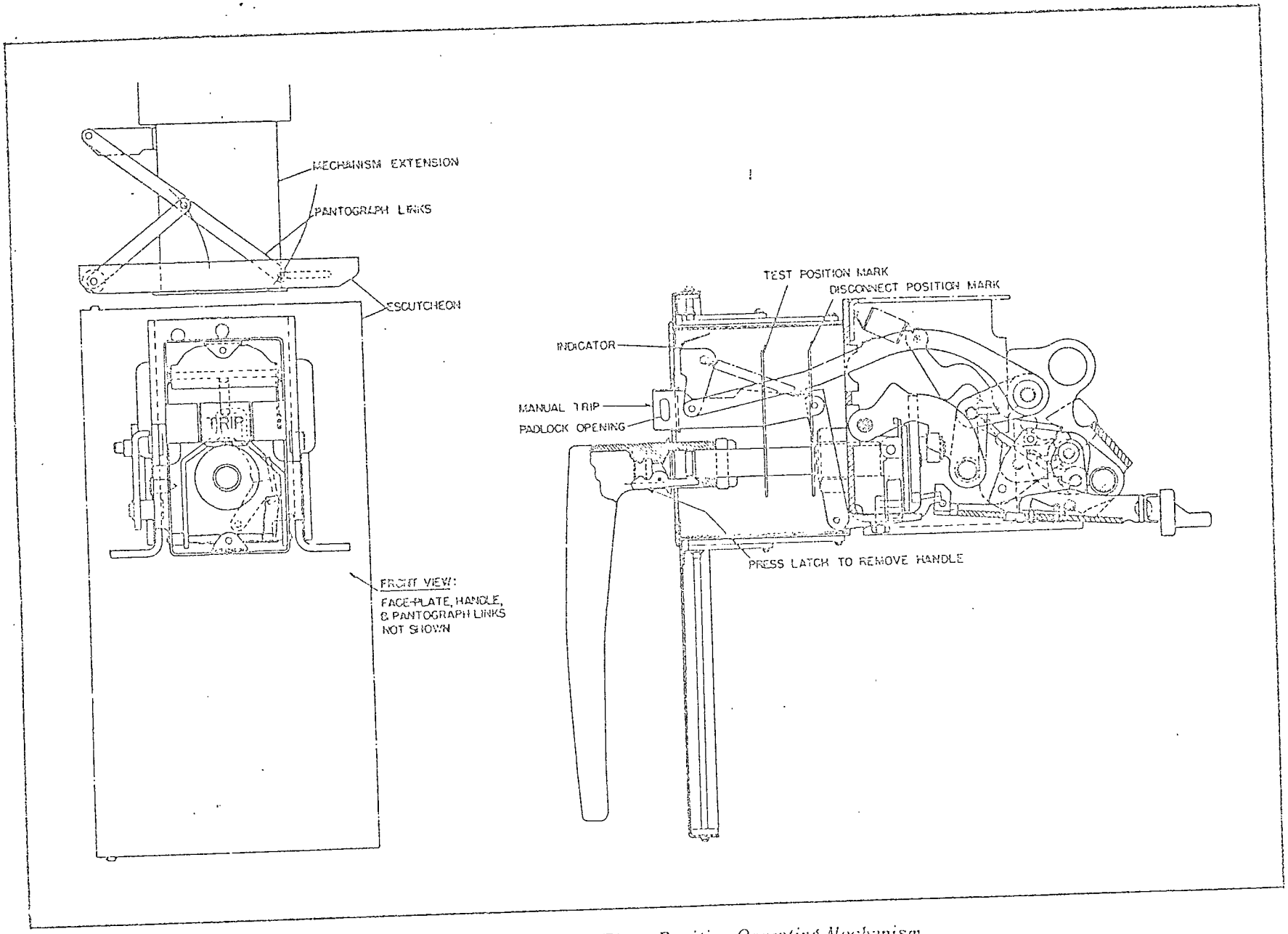

Fig. 3B - Type DB-50 Three Position Operating Mechanism

Energize relay operating coil. Slowly close the breaker manually. The relay release arm should operate the relay trip assembly and the relay trip assembly should open the relay contacts just before the breaker latches. This position can best be determined by watching the pawl in the breaker operating mechanism, which should snap in place just after the relay contacts open. If this operation sequence is not correct, the relay release arm should be bent to suit. Make sure that the relay release arm does not rub on either side of the relay trip assembly lever aperture. When the breaker is latched, de-energizing and then energizing the relay operating coil should not cause the relay contacts to move toward the closed position. Trip breaker.

Reconnect closing coil leads to the control circuit wiring. Check electric closing of breaker.

SHUNT TRIP ATTACHMENT

The shunt trip mounts on top of the platform immediately to the right of the operating mechanism. (See Fig. 16.)

It is non-adjustable and is intended for intermittent duty only. The shunt trip circuit must always be opened by an auxiliary switch contact. Tripping currents are tabulated in Table No. 2, Page 7.

Inspection

With the breaker in the open position, manually push the moving core against the stationary core and rotate the breaker handle to the closed position. The breaker should be trip free.

The trip lever of the shunt trip should have from 1/32 to 1/8-inch clearance to the trip bar.

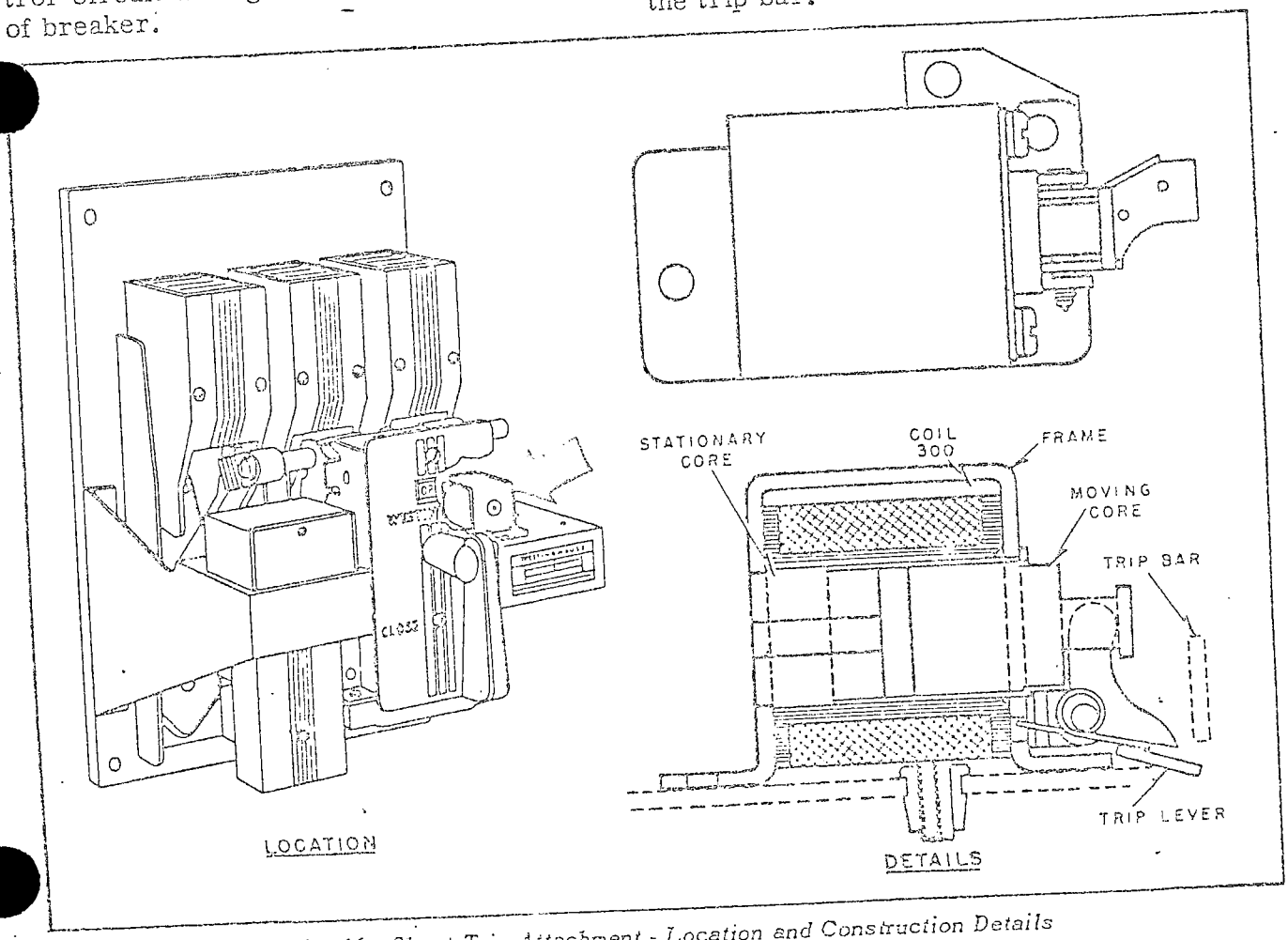

Fig 16. Shunt Trip Attachment - Location and Construction Details

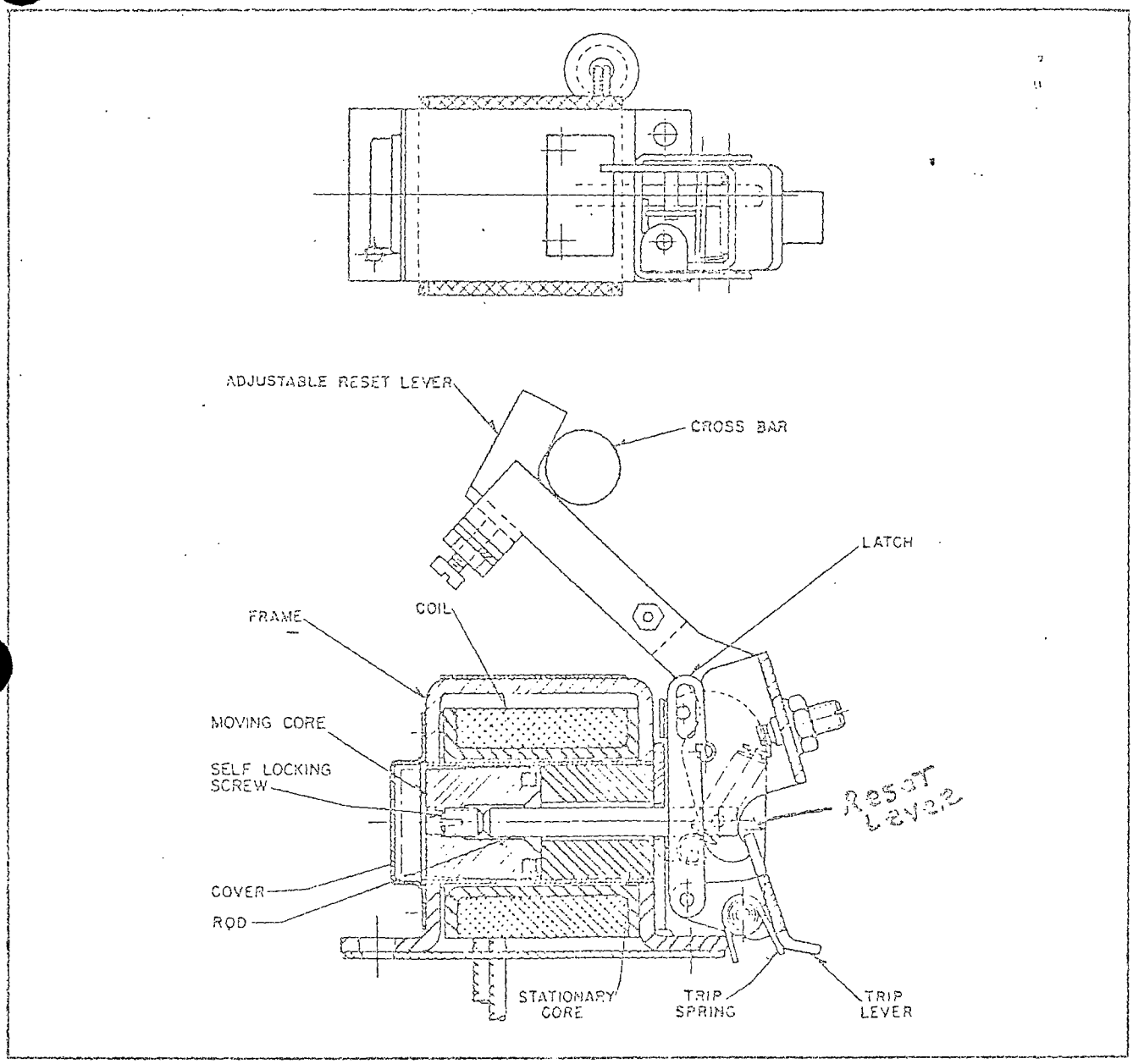

Fig. 17 - Undervoltage Trip Attachment - Construction Details

of the armature, to trip the breaker. The armature should move without friction, and should have approximately 1/32-inch overtravel after tripping.

Final inspection should be made electrically, after the circuit connections are complete as shown in Fig. 2, Page 10.

Maintenance

Remove all power from the breaker and repeat the mechanical inspection given above. Check for loose bolts and open circuit in potential coil.

FIELD DISCHARGE SWITCH

The DBF-16 breaker is a two-pole DB-50 breaker having special arc chutes and modified arcing contacts plus a field discharge switch mounted on the center pole (Fig. 20).

The field discharge switch is shipped with the gap setting shown in Fig. 20, for generator field protection. However, the

Maintenance

Check for loose bolts and faulty coil.

UNDERVOLTAGE TRIP ATTACHMENT

The undervoltage trip mounts on top of the platform, to the right of the shunt trip. (See Fig. 17). Its function is to trip the breaker when the voltage falls to between 30 to 60 percent of normal.

The moving core is normally held magnetically against the stationary core to hold the Micarta rod and consequently the reset lever, in the reset position. When the coil voltage is reduced sufficiently, the reset lever spring overcomes the magnetic attraction of the cores and rotates the reset lever clockwise. As the reset lever rotates, it carries with it the latch pin which rotates relative to the latch until the latch is released. When the latch releases, the trip spring rotates the trip lever counterclockwise to trip the breaker. The latch is reset by the cross bar moving the adjustable reset lever as the breaker opens. Fig. 17 shows the cross bar in the open position of the breaker.

The self-locking screw in the moving core is set at the factory and should not require adjustment. It is used to secure latch release when the moving core is 7/32 outside the frame.

Always connect the coil to the line side of the breaker unless the attachment is equipped with a time delay device. In this case, the time delay will delay the tripping of the breaker long enough to permit energization of the undervoltage coil from the load side. Do not use an auxiliary switch contact in the undervoltage circuit.

The trip lever of the undervoltage should have approximately 1/16 inch clearance to the trip bar when the breaker is half way closed.

UNDERVOLTAGE TIME DELAY ATTACHMENT

The undervoltage air dashpot time delay attachment mounts on the front of the undervoltage trip, replacing moving core cover. (See Fig. 17.) The needle valve screw in the top regulates the opening through which the air is forced and hence the time delay. (See Fig. 18.) The attachment does not have a quick reset feature and therefore approximately one minute should be allowed between operations to permit complete resetting. It is set to trip within 4 to 7 seconds.

Inspection

Hold the trip bar down and close the breaker manually. Release the trip bar slowly, allowing the undervoltage trip spring to raise the trip bar and trip the breaker.

Maintenance

Check for loose bolts and faulty coils.

REVERSE CURRENT TRIP ATTACHMENT

This attachment mounts directly on the center molded pole unit base, in the space ordinarily occupied by the overcurrent attachment. (See Fig. 19.) It is used to trip the breaker when the direction of current flow in that pole is reversed. When the series coil current is flowing in the forward direction, armature movement is prevented by a stop. When the series coil current is reversed, the armature rotates in the opposite direction to trip the breaker. Calibration adjustment covers 5 and 25 percent reverse current, based on normal current rating.

After tripping the reverse current armature is reset by opening the potential coil circuit. For this purpose an "a" contact of the breaker auxiliary switch should be connected in series with the potential coil.

Inspection

Close the breaker manually, and push backward on the spring stud located on the bottom

SALEM GENERATING STATION

INSTRUCTOR LESSON PLAN

TITLE: ATWT

LESSON NO.: ____

DURATION: ____

REVISION NO.: 0 DATE: 3-08-83

SUBMITTED: Rick Sweeney DATE: 3-08-83

APPROVED: [signature] DATE: 3-8-83

INSTRUCTOR REFERENCES:

TRAINING MATERIAL REQUIRED:

STUDENT HANDOUTS:

CLASSROOM REQUIREMENTS:

NOTES

VI. I.E. Bulletin 83-01

- Addresses the problem of failure of rx trip breakers due to a sticking of the under voltage trip attachment.

- Additionally it sites similar failures that have occured at other plants (H.B. Robinson, Conn Yankee, St. Lucie and Prarie Island). Due to these problems I.E. bulletins, I.E. circulars and Westinghouse Technical Bulletins were generated.

- Up to now these previous failures had not prevented a warranted rx trip because it only involved one of the 2 series breakers.

- The required actions for this I.E. bulletin are:

  1. Perform surveillance test of UV trip coil

  2. Ensure maint. program conforms with the W directive or freq. and lubrication of the trip mechanism

  3. Review EI4.3

  4. Provide written follow-up reply concerning actions performed.

SALEM GENERATING STATION

INSTRUCTOR LESSON PLAN

TITLE: ATWT

LESSON NO.: ____

DURATION: ____

REVISION NO.: 0 DATE: 3-08-83

SUBMITTED: Rick Sweeney DATE: 3-08-83

APPROVED: [signature] DATE: 3-8-83

INSTRUCTOR REFERENCES:

TRAINING MATERIAL REQUIRED:

STUDENT HANDOUTS:

CLASSROOM REQUIREMENTS:

NOTES	
TP 1-4	VII. Modification to EI-4.3 Review Immediate "Automatic and "Manual" actions. Note my recent rev. is #9. OD-15 Use of Operations Dept. Procedures o The following procedures shall be performed in a step by step sequence as written in the body of the procedure unless the procedure specifically states otherwise: Emergency Instructions Overall Operating Instructions Surveillance Procedures Radioactive Waste Procedures

SSINS No.: 6820
OMB No.: 3150-0012
Expiration Date:
08/30/85
IEB 83-01

UNITED STATES
NUCLEAR REGULATORY COMMISSION
OFFICE OF INSPECTION AND ENFORCEMENT
WASHINGTON, D.C. 20555

February 25, 1983

IE BULLETIN NO. 83-01: FAILURE OF REACTOR TRIP BREAKERS (WESTINGHOUSE DB-50) TO OPEN ON AUTOMATIC TRIP SIGNAL

Addressees:

All pressurized water nuclear power reactor facilities holding an operating license (OL) for action and to other nuclear power reactor facilities for information.

Purpose:

The purpose of this bulletin is to inform CP holders and licensees about recent failures of W DB type circuit breakers to trip open on receipt of an automatic trip signal from the reactor protection system (RPS) and to require action of all operating pressurized water reactors to assure proper operation of those breakers in the future.

Description of Circumstances:

On February 25, 1983, during startup of the Salem Unit 1 plant, both DB-50 RPS breakers failed to open automatically upon receipt of a valid trip signal on low-low steam generator level.

This failure to trip has been attributed to sticking of the undervoltage trip attachment. The reactor was tripped manually from the control room about 30 seconds after the automatic trip signal was generated. The manually initiated trip was accomplished by the shunt relays installed in each DB-50 breaker.

Background:

In some reactor protection system designs, the automatic protection signals are fed only to the undervoltage (UV) trip attachment of the reactor trip breakers; the manual signals are fed both to the UV trip and to a shunt trip coil of each breaker.

In the recent past, on two separate occasions, one RPS breaker at the Salem facility failed to open automatically due to binding of the UV trip attachment. These events have been reported in LER's 82-072/03X-1 and 83-001/03L. In addition, on February 22, 1983, Salem Unit 1 tripped on low-low steam generator level; however, since the operator manually tripped the reactor at a time almost coincidental with the automatic trip signal, the actual trip mechanism (manual or automatic) cannot be ascertained.

8212060367

Similar failures involving the UV trip attachment to the RPS have been reported to the NRC. These failures only involved one of the two series breakers, therefore they did not result in a failure to automatically trip the reactor. Said failures have occurred at H. B. Robinson, Connecticut Yankee, Prairie Island and St. Lucie in addition to those at Salem. As a result of these events, the NRC issued IE Bulletin No. 71-02 and IE Circular No. 81-12, and Westinghouse issued Technical Bulletin No. NSD-78-74-1 dated January 11, 1974 and NSD Data Letter 74-2 dated February 14, 1974.

Required Actions for All Holders of Operating Licenses for Pressurized Water Reactors:

Licensees with W DB type breakers using undervoltage trip attachment in Reactor Protective System applications are requested to:

1. Perform surveillance test of undervoltage trip function independent of the shunt trip within 24 hours of receipt of this Bulletin unless equivalent testing has been performed within 5 days. Those plants for which on-line testability is not provided may complete this item before resuming operation or if currently operating, at the next plant shutdown.

   Review the maintenance program for conformance to recommended W program (attachment) including frequency and lubricant applied to trip mechanism. Verify actual implementation of the W program. If maintenance including lubrication does not conform, initiate such maintenance within 5 days of receipt of this bulletin or provide an alternate maintenance program. Repeat the testing required in item 1 prior to declaring the breaker OPERABLE.

3. Notify all licensed operators of the failure-to-trip event which occurred at Salem. Review the appropriate emergency operating procedures for the event of failure-to-trip with each operator upon his arrival on-shift.

4. Provide written reply within 7 days of receipt of this bulletin,

   a. identifying results of testing performed in response to item 1,

   b. identifying conformance of maintenance program to W recommendation and describing results of maintenance performed directly as a result of this Bulletin in response to item 2,

   c. provide statement that provisions are in place to notify licensed operators of the Salem event and bring to their attention appropriate failure-to-trip emergency procedures upon their arrival on-shift.

   d. You are reminded of the requirements for prompt notification in accordance with 10 CFR 50.72 in the event of detecting an inoperable RPS breaker.

Licensees not using the subject undervoltage trip attachment and therefore not affected by this bulletin shall submit a negative declaration within 7 days of the receipt ~~of this bulletin~~.

The written report required shall be submitted to the appropriate Regional Administrator under oath or affirmation under provisions of Section 182a, Atomic Energy Act of 1954, as amended. The original copy of the cover letters and a copy of the reports shall be transmitted to the U. S. Nuclear Regulatory Commission, Document Control Desk, Washington, D.C. 20555 for reproduction and distribution.

This request for information was approved by the Office of Management and Budget under a blanket clearance number 3150-0011 which expires April 30, 1985. Comments on burden and duplication may be directed to the Office of Management and Budget, Reports Management, Room 3208, New Executive Office Building, Washington, D.C. 20503.

If you have any questions regarding this matter, please contact the Regional Administrator of the NRC Regional Office or the technical contact listed below.

Original signed by E. L. Jordan

Richard C. DeYoung, Director
Office of Inspection and Enforcement

Technical Contact: I. Villalva, IE
301-492-9635

V. Thomas, IE
301-492-4755

J. T. Beard, NRR
301-492-7465

Attachment:
1. Transcription of Westinghouse NSD Ltr. 74-2
2. List of Recently Issued IE Bulletins