SMUD
SACRAMENTO MUNICIPAL UTILITY DISTRICT □ 6201 S Street, Box 15830, Sacramento, California 95813; (916) 452-3211

March 12, 1980

Nuclear Regulatory Commission
Attention: Mr. H. R. Denton, Director
Office of Nuclear Reactor Regulation
Washington, D. C. 20555

Re: Docket No. 50-312
Rancho Seco Nuclear Generating
Station, Unit No. 1
Your Request for Information
Dated March 6, 1980

Dear Mr. Denton:

The Sacramento Municipal Utility District has reviewed your subject request for information regarding the Crystal River Unit No. 3 reactor trip of February 26, 1980. Attached is the report which addresses each of the items requested.

A copy of the attached report has been submitted to Region V, Office of Inspection and Enforcement. This report was submitted as a supplement to the Sacramento Municipal Utility District response of February 22, 1980, concerning IE Bulletin 79-27.

Please advise if we can provide any additional information; however, we consider this response to complete the requirements of the subject request and will take no further action unless so advised.

Sincerely yours,

Wm. C. Walbridge

Wm. C. Walbridge
General Manager

Attachment
WCW:RPO:jim

Subscribed and sworn to before me
this 12th day of March, 1980

Patricia K. Geisler
Notary Public

OFFICIAL SEAL
PATRICIA K. GEISLER
NOTARY PUBLIC-CALIFORNIA
PRINCIPAL OFFICE IN
SACRAMENTO COUNTY
My Commission Expires November 22, 1983

A001
S
1/1

8003140 218

SACRAMENTO MUNICIPAL UTILITY DISTRICT

RESPONSE TO

NUCLEAR REGULATORY COMMISSION

OFFICE OF NUCLEAR REACTOR REGULATION

REQUEST FOR INFORMATION DATED MARCH 6, 1980

1. REQUEST: Summarize power upset events on NNI/ICS that have previously occurred at your plant.

RESPONSE:

EVENT #1, 11-2-74, Rx @ 32% FP:

Momentary loss of NNI "Y" and "Z" DC power supplies due to tripping of "J" inverter during manual switching. Some control room instrumentation was lost (∿12 seconds).

EVENT #2, 12-26-74, Rx @ 40% FP:

Loss of ICS X power due to a component failure (SCR) in the "C" inverter. Manual control of steam and feedwater was required.

EVENT #3, 12-28-74, Rx @ 40% FP:

Loss of ICS X power due to a component failure (3ΦBridge) in the "C" inverter. Manual control of steam and feedwater was required.

EVENT #4, 12-31-74, Rx @ 40% FP:

Momentary loss of NNI Y and Z and ICS Y power supplies due to tripping "J" inverter during manual switching. Some control room instrumentation was lost (∿45 seconds).

Following these events above, parallel inverter supply was added to the ICS and NNI DC supplies. In addition, an automatic bus transfer was added to the 118 VAC instrumentation supply. See Figure 1 for initial power supply configuration and Figure 2 for modification performed.

EVENT #5, 4-16-75, Rx @ 35% FP:

Reactor tripped due to loss of "B" inverter which resulted in a loss of neutron power signal to the ICS.

A two-input Auctioneer was added to select the highest of the average of two neutron signals to prevent a recurrence. The two inputs are powered by different inverters.

EVENT #6, 3-20-78:

See response to Item 3.

EVENT #7, 1-2-79, Rx @ 100% FP:

A reactor trip resulted from the loss of reactor coolant flow indication to the ICS. The flow signal originates in the "A" Reactor Protection Channel which was depowered by a trip of the "A" inverter. ICS responded correctly during post trip control.

EVENT #8, 1-5-79, Rx @ 100% FP:

During maintenance, a short to ground caused ICS power supplies to trip. Automatic control was lost. Excessive cooldown resulted from subsequent SFAS initiation of auxiliary feedwater.

A Safety Grade Auxiliary Feedwater Control, independent of SFAS or ICS, is being designed.

EVENT #9, 4-22-79, Rx @ 100% FP:

A reactor trip resulted from the loss of reactor coolant flow indication to the ICS. The flow signal originates in the "A" Reactor Protection Channel which was depowered by a trip of the "A" inverter. ICS responded correctly during post trip control.

2. REQUEST: Specifically review the Crystal River event, and address your susceptibility to it in general.

RESPONSE: SMUD has reviewed the Crystal River event, both the cause and sequence of events.

Bailey Meter Company has informed the Sacramento Municipal Utility District that the cause of the Crystal River event was the improper insertion of a buffer card (Part No. 6624609L1) into a buffer module (Part No. 6624610). This improper insertion resulted in a short of 24 volts to common with a total loss of non-nuclear instrument X power supply.

Bailey also supplied installation instructions on the proper method of buffer card replacement. These instructions will be covered within a training program with all Instrument and Control Technicians during the present refueling outage. In addition, these instructions will be added to applicable procedures.

To ensure that all buffer cards presently installed have been installed properly, Rancho Seco will inspect all modules containing these buffer cards during the present refueling outage. The inspection will consist of ensuring proper alignment of the bifurcated contacts, no bent contacts and the contacts are properly seated.

Concerning the sequence of events, SMUD contends that with the modifications made to the Rancho Seco NNI systems and the addition of selected instrumentation available to the operators which is not dependent on NNI power, the primary code safety valves would not have been challenged. Not challenging the code safety valves would therefore prevent filling the pressurizer relief tank, rupturing the rupture disc and spilling reactor coolant into the reactor containment building.

The modifications made to the Rancho Seco NNI systems and the dedicated instruments independent of the NNI power is explained in response number 3.

SMUD's contention that reactor coolant would not spill into the reactor containment building is based on the fact that the instrumentation which is independent of NNI would provide information to the operator, so the subcooling margin could be determined and high pressure injection reduced, preventing solid plant conditions. This instrumentation would also provide steam generator level information, allowing the operator to utilize the Class 1 auxiliary feed system to supply feedwater, if necessary.

3. REQUEST: Set forth the information presented by each licensee in the meeting on March 4.

RESPONSE: The SMUD representative at the March 4 meeting described Rancho Seco's NNI transient of March 20, 1978, and corrective action taken.

Approximately 0425 on March 20, 1978, the NNI-Y channel tripped. This trip was caused by a control room operator who was replacing a burned-out light bulb in a back-lighted pushbutton switch on one of the control consoles. The DC power for this switch is provided from the "Y" portion of the Non-Nuclear Instrumentation. To change out the light bulb, the light assembly was pulled out from the panel and flipped down, exposing the bulbs. During the change, a bulb was dropped into the open light assembly cavity, creating a short to ground. The current-limiting and undervoltage protection for the NNI-Y DC power supplies actuated during the current surge, cutting off AC power to all NNI-Y DC power supplies.

This transient was reported to the NRC by Reportable Occurrence 78-1 dated March 31, 1978. The SMUD Management Safety Review Committee (MSRC) held a meeting on March 22, 1978, at which time a three-member committee was established. This committee was directed to investigate the Rancho Seco transient and recommend corrective action to prevent future recurrence of this or a similar problem. The committee members were:

a. SMUD Supervising Electrical Engineer

b. SMUD Supervising Mechanical Engineer

c. SMUD Nuclear Engineer who held an NRC Senior License

This committee presented a report to the MSRC on June 19, 1978. The recommendations and corrective action taken were as follows:

a. RECOMMENDATION: Nuclear Operations should develop a nonconducting plastic cap or rectangular foam rubber plug to insert in or cover the open back-lighted pushbutton modules whenever the lamp bulb section of the module is lifted out.

   ACTION TAKEN: Nuclear Operations developed and instituted the use of a rectangular foam rubber plug.

b. RECOMMENDATION: Transport the upper bulb fixture portion of the module to a remote location for removal and replacement of bulbs.

ACTION TAKEN: This practice has been instituted with all fixtures which are removable.

c. RECOMMENDATION: Perform tests on the existing NNI-Y power supply system to determine the following conditions:

1) Trip point of the power supply monitors (22 V)

2) Time delay to trip circuit breakers S1 and S2 (0.5 sec.)

3) The ampere limiting point of the 24-volt DC NNI-Y power supplies (7.5)

4) Transfer voltage point of the AC automatic transfer switch, relay 83 (100 V)

5) Overcurrent test at least 3 of the 5A fuses and compare test data with the manufacturer's curves.

6) Conduct an actual short circuit test similar to the accident case and verify protective device coordination using an oscillograph.

ACTION TAKEN: Testing was performed as recommended. The figures in parentheses are the results of the tests. In all cases, acceptance criteria were met.

d. RECOMMENDATION: For the NNI-Y power circuit, measure or calculate the amperes in the backlighted pushbutton-auxiliary relay circuits, and determine the possibility of using lower-rated fuses. Possibly lower-rated fuses would carry the load of the lamp bulbs and relay coils and would provide faster clearing of faults and prevent tripping at the 120 volt AC input circuit breakers.

ACTION TAKEN: As a result of the recommendation, all 5A fuses are being replaced with 0.75A fuses. This will be completed during the present refueling outage.

e. RECOMMENDATION: Provide a separate power supply module for the NNI instrument selector switches, associated indicating lamps and auxiliary relays. This circuit would be similar to that shown in Figure No. 3 attached. This change would not be likely to prevent a plant trip, but it would reduce the quantity of instrumentation lost for a short circuit condition identical to that of March 20, 1978.

ACTION TAKEN: A design was produced as shown in Figure No. 4. Equipment was ordered and the modifications are being made during the present refueling outage.

f. RECOMMENDATION: Make a study of all circuits connected to the NNI-X and Y power supplies that are not fused. Presently, there are several devices which are tied solid (no fuse) to the DC and AC source supplies. In order to provide proper isolation for short circuits, the addition of fuses is recommended.

ACTION TAKEN: This recommended study was performed. As a result, a design has been produced which will fuse all circuits leaving the NNI panels and all internal AC circuits. This modification will be completed during the present refueling outage.

g. RECOMMENDATION: Make a study on the possibility of using a lower-rated fuse rather than the universal 5A fuse now in use. A preliminary check on some of the devices, now protected by 5A fuses, revealed that this fuse may be oversized. Since the power supplies are automatic current limited to 7A, it is critical that the lowest possible fuse size be used. Possibly a 1 or 2-amp fuse would provide the fast operation necessary to prevent tripping of the input breakers for faults that should be cleared by the fuses.

ACTION TAKEN: This recommended study was performed. As a result, all 5A fuses are being replaced with fuses sized by an analysis of the load during the present refueling outage. The majority are 0.75A.

h. RECOMMENDATION: Make a study to determine if it is reasonably possible to improve the present NNI DC power supply configuration. For the NNI-Y system, the existing scheme provides redundancy for a single power supply failure and/or opening of one of the two AC source input breakers. However, because of design of the power supply monitor tripping scheme, the redundancy is negated for a low voltage condition on one bus because the monitor trips both AC input breakers at the same time.

ACTION TAKEN: A study was performed to determine if the power supply monitor tripping scheme could be changed. It was determined that the present scheme is the best. The auctioneered concept is to provide redundancy for the loss of either input voltage or the power supply itself. The function of the power supply monitor trip is to prevent operation of instrumentation below 22 VCD or single phase. Operation in this region would have unknown results on instrument response. It is therefore a better situation to trip the instruments rather than have the instruments display or control with false signals. As a result, the power supply monitor tripping scheme will not be modified.

i. RECOMMENDATION: Study the practicability of providing the following instrument indications for both RCS loops in the control room even though NNI-X or NNI-Y power supply is inoperative. Computer readout of these indications is satisfactory.

2 - Uncompensated pressurizer levels
1 - Wide range RCS pressure
1 - Wide range RCS Loop A T_c
1 - Wide range RCS Loop B T_c
1 - RCS Loop A T_h
1 - RCS Loop B T_h
1 - OTSG A Startup level
1 - OTSG B Startup level
1 - OTSG A pressure
1 - OTSG B pressure
1 - Makeup tank level
1 - Source range nuclear instrument

ACTION TAKEN: In conjunction with the above recommendation and the Fire Hazards Analysis Report, new instrumentation has been installed with readout capability on the plant computer in the control room.

With the exception of the uncompensated pressurizer levels, all the instrumentation listed above is independent of both NNI-X and Y. The control room computer has four (4) uncompensated pressurizer level inputs. One input is totally independent of NNI-X or Y, two are supplied by NNI-X and one is supplied by NNI-Y. This instrumentation meets the recommendation, that is, there will always be two uncompensated pressurizer levels available for loss of NNI-X or NNI-Y.

Additional instrumentation beyond that listed above also made available are:

2 - Incore thermocouples, range 0-2000°F
1 - Wide range RCS pressure
1 - Source range nuclear instrument

This instrumentation is completely independent of both NNI-X and Y power. These indications are available to the operator on the computer.

Directions have been placed on the computer console, excerpts from procedures discussed in j. below, directing the operator to place the following points on the computer trend recorders:

1 - Uncompensated pressurizer level (independent of NNI-Y and X)
1 - Wide range RCS pressure
1 - Wide range RCS Loop A T_c
1 - Wide range RCS Loop B T_c
1 - OTSG A startup level
1 - OTSG B startup level

All remaining points have been placed in an operator's group. This group will be called up by procedure to print every minute. The line printer used for this function is completely independent of the alarm line printer and cannot be overloaded due to alarms.

j. RECOMMENDATION: Nuclear Operations should prepare a procedure for safety shutting down the plant upon total loss of both the NNI-X and NNI-Y power supplies and associated instrumentation. Because these systems are non-Class I and non-redundant, their continuous availability cannot be assured; consequently, the total loss of both systems should be expected to occur at some time during the life of the plant.

ACTION TAKEN: Procedures have been written for loss of NNI-Y, NNI-X and both NNI-Y and X simultaneously. The instrumentation discussed above is utilized within all procedures. Licensed Operators have been trained in these procedures.

4. REQUEST: Address information available to the operator following various NNI/ICS power upset events, including a discussion of:

- how the operator determines which information is reliable;

- what information is needed to bring the plant to cold shutdown.

RESPONSE: The information available to the operator independent of either NNI power supplies or the ICS power supply was discussed in 3.i. above. This information was selected for presentation to the operator with the intent of bringing the plant to a cold shutdown condition. The design objective of this instrument selection was to remove any doubt from the operator, when experiencing a power upset on NNI/ICS power supply, that the information presented was anything but reliable. By having a completely independent group of instruments; cumbersome procedures did not have to be written; any power upset in the NNI or ICS power supplies could be handled quickly; and the mistake of reading a bad instrument and controlling on that bad instrument could be eliminated. It is SMUD's contention that completely independent instrumentation is the preferred method of responding to NNI or ICS power supply upset events.

5. REQUEST: Address the feasibility of performing a test to verify reliable information that remains following various NNI/ICS power upsets.

RESPONSE: A test will be performed which will prove that the instrumentation listed in 3.i. above is in fact independent of NNI/ICS power upsets. This test will show that the turning off of each of the NNI/ICS power supplies will not affect the information being used by the operator in the computer for such upsets. This test will be performed during the current refueling outage.

6. REQUEST: Address each CR-3 proposed corrective action in terms of applicability to your plant.

RESPONSE: CR-3 IMMEDIATE PROPOSED CORRECTIVE ACTION

a. CR-3: Thorough testing of NNI system to determine cause of failure.

RS: See item 2 response concerning SMUD action taken as a result of the CR-3 cause of failure.

b. CR-3: Modify PORV so that NNI failure closes valve.

RS: SMUD is modifying the PORV circuitry so that failure of the NNI power supply will fail the PORV close. This modification will be installed during the current refueling outage. A test will be performed to verify that failure of the NNI power supply will fail the PORV close. This test will duplicate the sequential loss of power as experienced at CR-3.

c. CR-3: Modify the pressurizer spray valve so that the valve doesn't open on NNI failure.

RS: SMUD is modifying both spray valves circuitry so that failure of the NNI power supply will not cause either of the two spray valves to open. This modification will be installed during the current refueling outage. A test will be performed to verify that failure of the NNI power supply will not cause the spray valve to open.

d. CR-3: Provide positive indication of all three relief or safety valves.

RS: NUREG-0578 item 2.1.3a required SMUD to install direct indication of power-operated relief valve (PORV) and safety valve position. In SMUD letter, J. J. Mattimoe to Harold R. Denton, dated January 16, 1980, it was explained that equipment located within the reactor building to perform the positive indication function should be installed during the present refueling outage. It was also explained that delivery of equipment to be located outside the reactor building (signal processing equipment) has a reasonable delivery date of May 1, 1980.

In response to SMUD letter of January 16, 1980, NRC letter of February 1, 1980, Harold R. Denton to J. J. Mattimoe, recognizes that late delivery of the signal processing equipment. This letter requires implementation of positive indication of the PORV and safety valves within 30 days of receipt of the equipment but no later than June 1, 1980.

e. CR-3: Establish procedural control of NNI selector switches.

RS: The intent of the procedural controls planned by CR-3 is to have all indications displayed from one NNI power supply. This will allow the operator to shift indication if that power supply should fail. As an example, if all of the instrumentation displayed was from the NNI-X power supply, and the NNI-Y power supply failed, the operator would know that the displayed indication was accurate. Then again, if the NNI-X power supply failed, the operator could shift to other inputs, which would be NNI-Y supplied, thereby presenting accurate indication.

At SMUD, as a result of the study explained in item 3, procedural control of NNI selector switches was not practical. This was due to the cross pollination of NNI-X and Y power to various instruments, switches and buffers within instrument strings. This was one of the reasons SMUD decided to install instrumentation completely independent of either NNI-X or Y. The instruments supplied to the control room are explained in item 3.i.

f. CR-3: Train all operators in response to NNI failures.

RS: SMUD has developed procedures for loss of NNI-X, NNI-Y and both NNI-X and Y. These procedures are presently being reviewed and revised to incorporate the instrumentation being installed this refueling outage. Prior to completion of the refueling outage, all operators will receive training in the new procedures and refresher training in the methods of restoring failed NNI power supplies.

g. CR-3: Move 120 V ICS X power to a vital bus.

RS: At Rancho Seco, NNI-Y, NNI-X and the ICS power supplies receive their input power from both a vital bus, Class I, 118 VAC battery backup inverter and a Class II, 118 VAC battery backup inverter. Figure 4 attached is a typical diagram of either NNI or ICS power supplies.

There are two +24 V power supplies, one being supplied from the vital bus and one supplied from the secondary plant bus. The output from these two +24 V power supplies is auctioneered to supply the load. A loss of either the vital bus supply or the secondary supply will therefore not cause a loss of +24 V. This explanation is the same for the -24V supply. The NNI-X, NNI-Y and ICS power supplies are installed in this manner.

The 118 VAC power supply for NNI or ICS is protected through an auto-transfer switch. This is shown on Figure 4. The auto-transfer switch normal lineup is to the vital bus supply. On decreasing voltage (100V), the auto-transfer switch transfers to the secondary plant bus. This transfer is alarmed in the control room and local indicating lights display from which source the auto-transfer switch is receiving power. Operator action is required to reposition the auto-transfer back to the vital bus.

h. CR-3: Initiate more extensive program for events recorder system.

RS: Rancho Seco utilizes a Bailey 855 computer system. The software for this system is updated and verified to be operable each refueling outage by a Bailey Meter Company representative. This includes the post trip review portion.

In addition, SMUD is installing a new computer system. This new system will be a backup to the Bailey 855. This new system has an independent post trip review capability, thereby providing Rancho Seco with two independent post trip recording packages. It is expected that the new system will be operable by mid year.

i. CR-3: Provide operator with redundant indication of main plant parameters.

RS: As explained in item 3.i., SMUD is installing instrumentation which is totally independent of either NNI power supply. This new instrumentation meets the intent of this CR-3 corrective action.

CR-3 AT NEXT REFUELING (SEPTEMBER 1980) PROPOSED CORRECTIVE ACTION

j. CR-3: Install indication lights on all panels to know if power on panel.

RS: The NNI-Y and NNI-X power supplies have both ampere meters and voltage meters which are used to determine that the power supply is operating. The new power supplies for indicating lamps and auxiliary relays will initially have lights on their front panels indicating proper operation. Ampere meters and voltage meters are on order and will be installed in the near future. A future modification to the panel doors which house the power supply will be to install clear plexiglass windows, thereby not requiring the unlocking and opening of the panel doors to determine the power supplies are operating.

k. CR-3: Quick access to fuses is being designed into cabinets.

RS: Rancho Seco utilizes GLD fuses in HKA self-indicating holders. If a fuse should fail, the self-indicating holder would illuminate, and the control room would receive an alarm. Each fuse is labeled indicating the equipment that power source supplies. The operator is able to quickly determine which fuse has failed by viewing through the plexiglass panels which will be installed on the cabinet doors.

l. CR-3: Modify EFW pump circuit to start pumps on any low steam generator level signal.

RS: The SMUD representative at the March 4, 1980, meeting did not record this corrective action statement in the same context as listed above. The SMUD representative recorded this corrective action as follows:

> "Modify EF pump auto start circuit and reactor trip circuit so that any power failure will not prevent activation on low SG level."

The EFW pumps at Rancho Seco start on three different signals:

1. Loss of all reactor coolant pumps;
2. Low main feed pump discharge pressure for both pumps (850 psig).
3. SFAS initiation (1600 psig RCS pressure).

All of these auto starting circuits are independent of NNI and ICS power supplies.

Rancho Seco's EFW pumps do not auto start on reactor trip or low SG level. As a result, no circuit changes are contemplated.

CR-3 LONG TERM PROPOSED CORRECTIVE ACTION

m. CR-3: Investigate upgrade of NNI capabilities - total loss of NNI.

RS: As explained within item 3, Rancho Seco has performed a study and is presently upgrading both the NNI power supplies and adding instrumentation to the control room which is independent of NNI. With this upgrade and new instrumentation, Rancho Seco operators will be able to respond to a total loss of NNI without repeating the CR-3 transient.

n. CR-3: Remote shutdown is being designed.

RS: The new instrumentation as explained in item 3 is first routed to the Rancho Seco emergency shutdown panel. This panel is located on the grade level within the Auxiliary Building in the A, 4160 V switchgear room. As a result, the remote shutdown, as stated by CR-3, is being upgraded to be independent of both NNI and ICS power supplies.

o. CR-3: Provide backup AC sources to inverters with automatic transfer.

RS: Figure 4, attached, displays the typical arrangement of NNI-Y, NNI-X and ICS power supplies. As can be seen, each of these power supplies receives its primary source of AC supply from a vital bus. Secondary plant inverters supply backup AC sources. Therefore, SMUD has already modified the NNI and ICS power supplies to meet the intent of this CR-3 long-term corrective action.

7. REQUEST: Expand your review under IE Bulletin 79-27 to include the implications of the CR-3 event. Inform us of your schedule for completion of this expanded review as discussed on March 4, 1980.

RESPONSE: SMUD has performed an in-depth study of the NNI and ICS power supplies. As explained within this report, the changes and modifications being instituted at Rancho Seco fully respond to the CR-3 event. A copy of this report will be forwarded to I&E Region V as a supplement to the SMUD letter of February 22, 1980, which was the response to IE Bulletin 79-27. SMUD, therefore, feels the expanded review is complete.

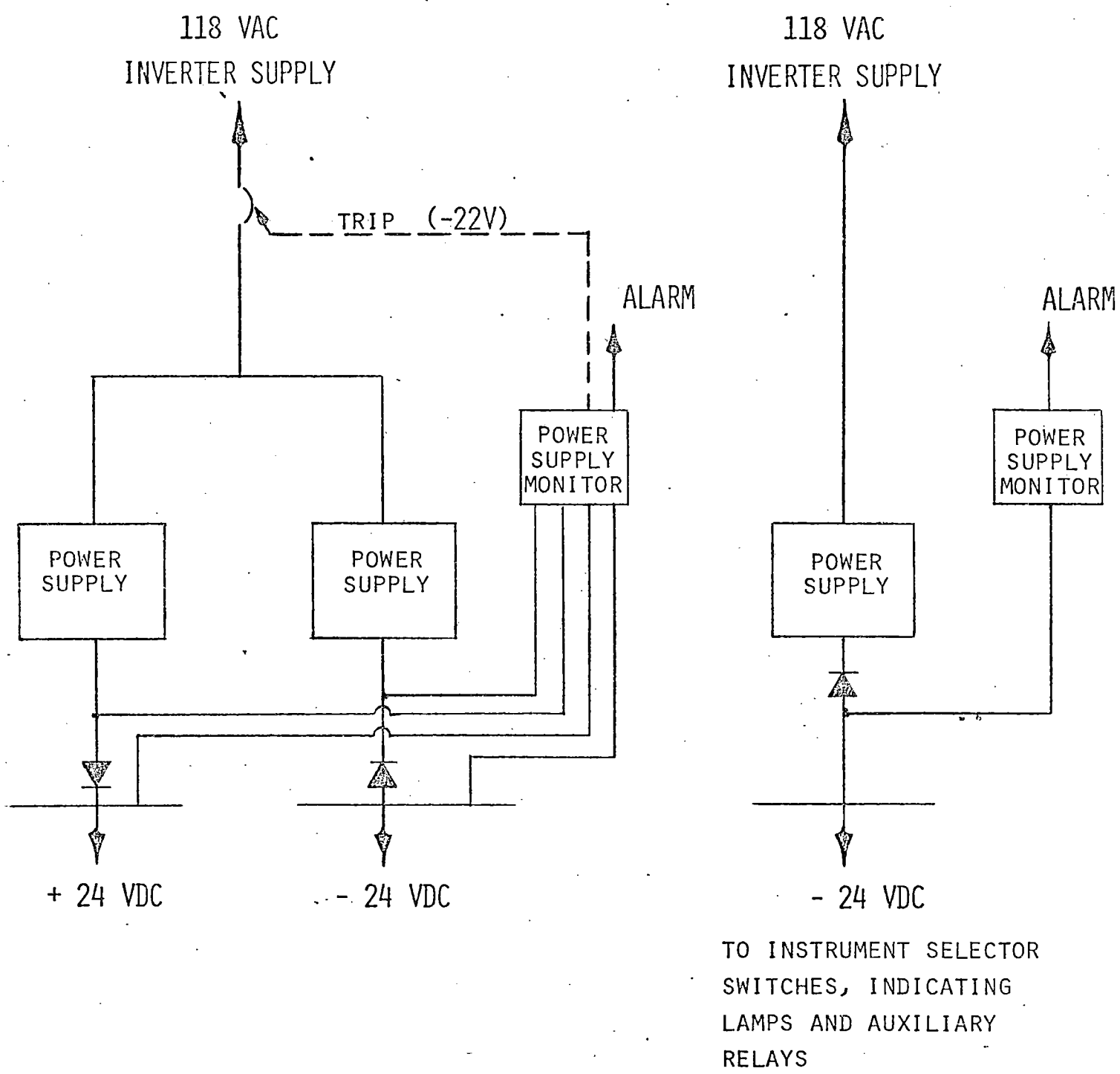

ORIGINAL POWER SUPPLY DISTRIBUTION

FIGURE 1

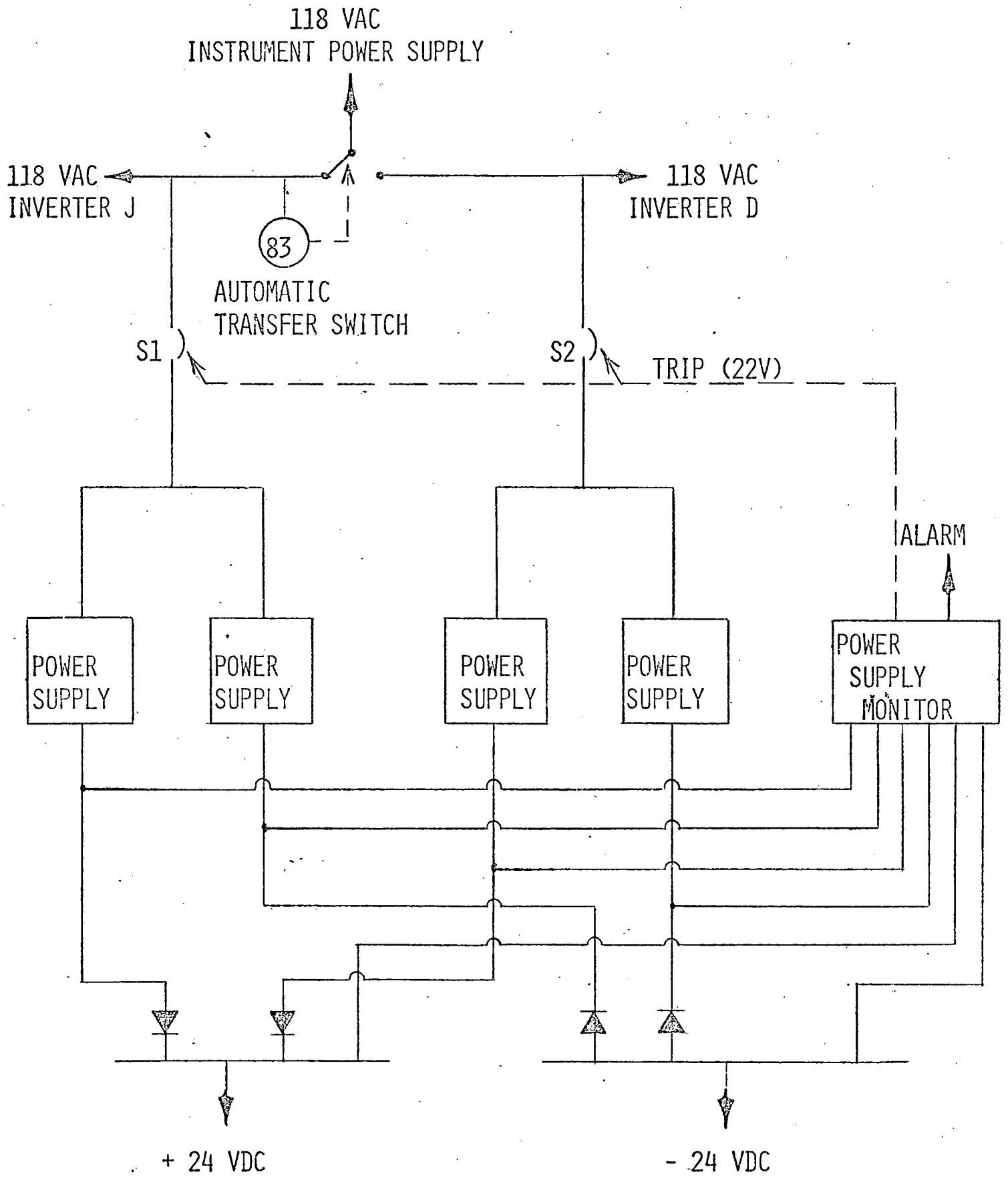

1975 POWER SUPPLY MODIFICATION

FIGURE 2

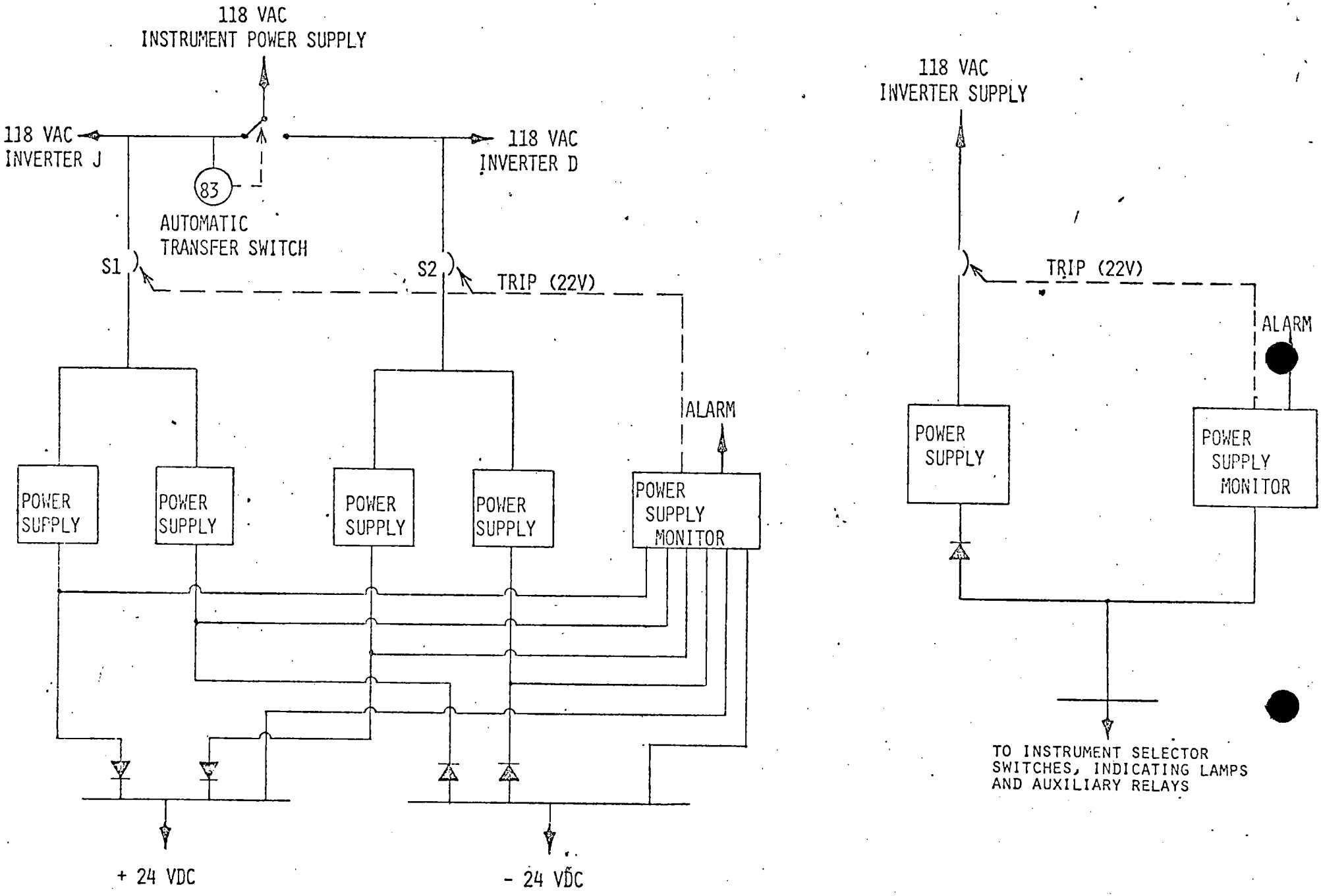

NNI COMMITTEE RECOMMENDED MODIFICATION

FIGURE 3

FIGURE 4

1980 POWER SUPPLY MODIFICATION