EVALUATION OF POTENTIAL MALFUNCTIONS
DUE TO HIGH ENERGY LINE BREAKS

Introduction

Westinghouse has notified PSE&G and its other utility customers that potential control system malfunctions resulting from high energy line pipe breaks and interacting with protective functions could result in consequences more limiting than those presented in existing safety analyses. Such control system failures could result from the adverse environment created by such a pipe break. The Westinghouse analysis of these events has identified four specific potential interactions which require utility review for applicability at their plants. The control systems associated with the potential interactions are the following:

Steam Generator Power Operated Relief Valves Control System
Pressurizer Power Operated Relief Valves Control System
Main Feedwater Control System
Rod Control System

Implicit in the four potential interaction scenarios identified by Westinghouse are worst case assumptions concerning the particular pipe break, its size and location, and the type and extent of consequential failures in control systems induced by the adverse environment. Postulated pipe break locations and control system malfunctions other than those specified would not result in consequences more limiting than those already presented in the Safety Analysis Report. These assumptions are in addition to the already conservative set of assumptions ascribed to the analysis of design basis events in the Safety Analysis Report. The particular potential interaction scenarios represent a significantly less probable subset of design basis events.

Each particular potential interaction, the applicability to Salem and any corrective action that may be required are described as follows:

EVALUATION OF POTENTIAL MALFUNCTIONS
DUE TO HIGH ENERGY LINE BREAKS

Item No. 1 - Steam Generator Power Operated Relief Valve Control System

Potential Interaction Identified by Westinghouse

A feedwater line rupture occurring outside the containment in either the main or auxiliary feedwater lines between the containment penetration and check valve could have an adverse effect on the steam generator power operated relief valve control system. The adverse environment resulting from the feedwater line rupture could impact the instrumentation and equipment which controls these valves. The potential malfunction could result in the inadvertent opening of the power operated relief valves or cause them to remain open. This condition would cause the intact steam generators to depressurize and result in loss of the turbine driven auxiliary feedwater pump. With an assumed single active failure of a motor driven auxiliary feedwater pump, flow of auxiliary feedwater can be lost to all steam generators for a period of time. The remaining operable motor driven auxiliary feedwater pump would be injecting water into the ruptured feedwater line. The severity of this postulated event is dependent on timely operator action but could cause results more limiting than those presented in FSAR analyses.

Analysis/Safety Implications

The Salem plant is provided with two penetration areas outside the containment where this postulated feedwater line rupture could occur (refer to attached figures). Each penetration area is utilized for routing of steam and feedwater piping for two steam generators. The penetration areas are physically separated so that a break in one will not affect the other. Therefore this particular break can only affect the steam generator power operated relief valve control systems within the particular penetration area where the break is postulated.

The turbine driven auxiliary feedwater pump is supplied steam from No. 11 and 13 steamlines which are located within the same penetration area (refer to

Item 1 (Cont'd)

attached figures). A rupture in No. 11 Steam Generator feedwater line will result in the loss of one steam feed for the turbine driven pump. The power operated relief valve for No. 13 Steam Generator (13MS10) employs a pneumatic control system which uses steam pressure as a control parameter. A control signal from No. 13 Steam Generator pressure transmitter (not safety-related) operates the valve through an electric/pneumatic converter. The pressure instrument, electric/pneumatic converter and power operated relief valve are located in the penetration area which is subject to the adverse environment resulting from the feedwater line break. This is control grade equipment and as such was not qualified for post accident operation and therefore could be subject to misoperation. The potential malfunction could be the opening of valve 13MS10 and depressurization of No. 13 Steam Generator with the eventual loss of the remaining turbine driven auxiliary feedwater pump steam supply.

The two motor driven auxiliary feedwater pumps are aligned to provide flow to all steam generators (each pump is capable of supplying adequate flow to two steam generators). With an assumed single failure of one motor driven pump, the remaining pump would be supplying the ruptured steam generator feedwater line.

This particular sequence of events results in the loss of all auxiliary feedwater flow to the intact steam generators. The operator must respond by isolating the ruptured steam generator and providing flow to the two unaffected steam generators. A similar analysis would result with the postulated break in No. 13 Steam Generator feedwater line.

In the analysis of feedwater line breaks presented in the Salem FSAR section 14.3, auxiliary feedwater was assumed to initiate 10 minutes following the incident with an additional 6 minutes assumed before auxiliary feedwater enters the unaffected steam generators. No credit has been taken in the Salem Safety Analysis for auxiliary feedwater operation in this time period (an effective loss of the system). In addition, Westinghouse WCAP 9600, "Report on Small Accidents for Westinghouse NSSS Systems" describes transient analyses for

Item 1 (Cont'd)

postulated loss of all main and auxiliary feedwater (no pipe rupture). The results indicated that the operator has at least 4000 seconds following the loss of feedwater to assure auxiliary feedwater flow to the steam generators before the core begins uncovering. The potential deficiency described above is similar to that presented in Section 4.2 of WCAP-9600 without the additional assumption of a feed line rupture outside the containment between the check valve and penetration. Conservatively assuming no heat removal in the steam generator liquid inventory lost through the feedwater line break, Westinghouse calculations have shown that the operator would still have at least 2800 seconds to take corrective action to assure auxiliary feedwater flow to the unaffected steam generators.

The operating procedures require that the affected steam generator be isolated to assure auxiliary feedwater flow to the remaining steam generators. The operator is provided with adequate information and controls to accomplish these actions. The steam generator pressure instruments utilized for post accident monitoring (3 for each line) are located in the affected environment. These instruments have undergone environmental qualification testing for post accident operation. The auxiliary feedwater valves which must be closed to assure flow to the unaffected steam generators are located in the auxiliary building and are not subject to the adverse environment. Other parameters required for post accident recovery such as reactor coolant system parameters and steam generator levels are not located in the potential break area. The operators can respond in the time frame prescribed.

In this particular sequence of events postulated, the closure of the auxiliary feedwater valves to No. 11 and 13 Steam Generators would result in the operable motor driven auxiliary feedwater pump providing flow to No. 12 and 14 Steam Generators and thereby assuring safe plant shutdown. Westinghouse has performed analyses indicating that two steam generators are sufficient for safe shutdown.

A postulated break in No. 12 or 14 Steam Generator feedwater lines in the same location will not result in the loss of the turbine driven auxiliary feedwater pump but could cause the other steam generator to depressurize because of potential misoperation of the power operated relief valve.

Item 1 (Cont'd)

Postulated main feedwater line breaks in locations other than those specifically addressed would not result in a sequence of events to cause this potential interaction. A break inside the containment would not create an adverse environment in the area of the steam generator power operated relief valves. A break in the penetration area upstream of the main feedwater check valves could cause an adverse environment for a potential misoperation of the steam generator power operated relief valves. This could cause the loss of the turbine driven pump if the break was postulated in the inboard penetration area, however, this break would not result in the operable auxiliary feedwater pump delivering flow to the pipe break. Recovery would proceed in accordance with operating procedures.

Corrective Action

This particular sequence of events as postulated by Westinghouse is not a safety consideration in that the loss of all auxiliary feedwater following a feedline rupture was factored into the Salem Safety Analysis. Operator action will assure auxiliary feedwater flow to the unaffected steam generators and can be accomplished within the alloted time frame. The Salem design basis considered operator action in recovery from feedwater/steam line break events. The indications and controls required for these operator actions are unaffected by the postulated break.

The Salem operating procedures and operator training program are being revised to address the concerns described herein.

ITEM 1

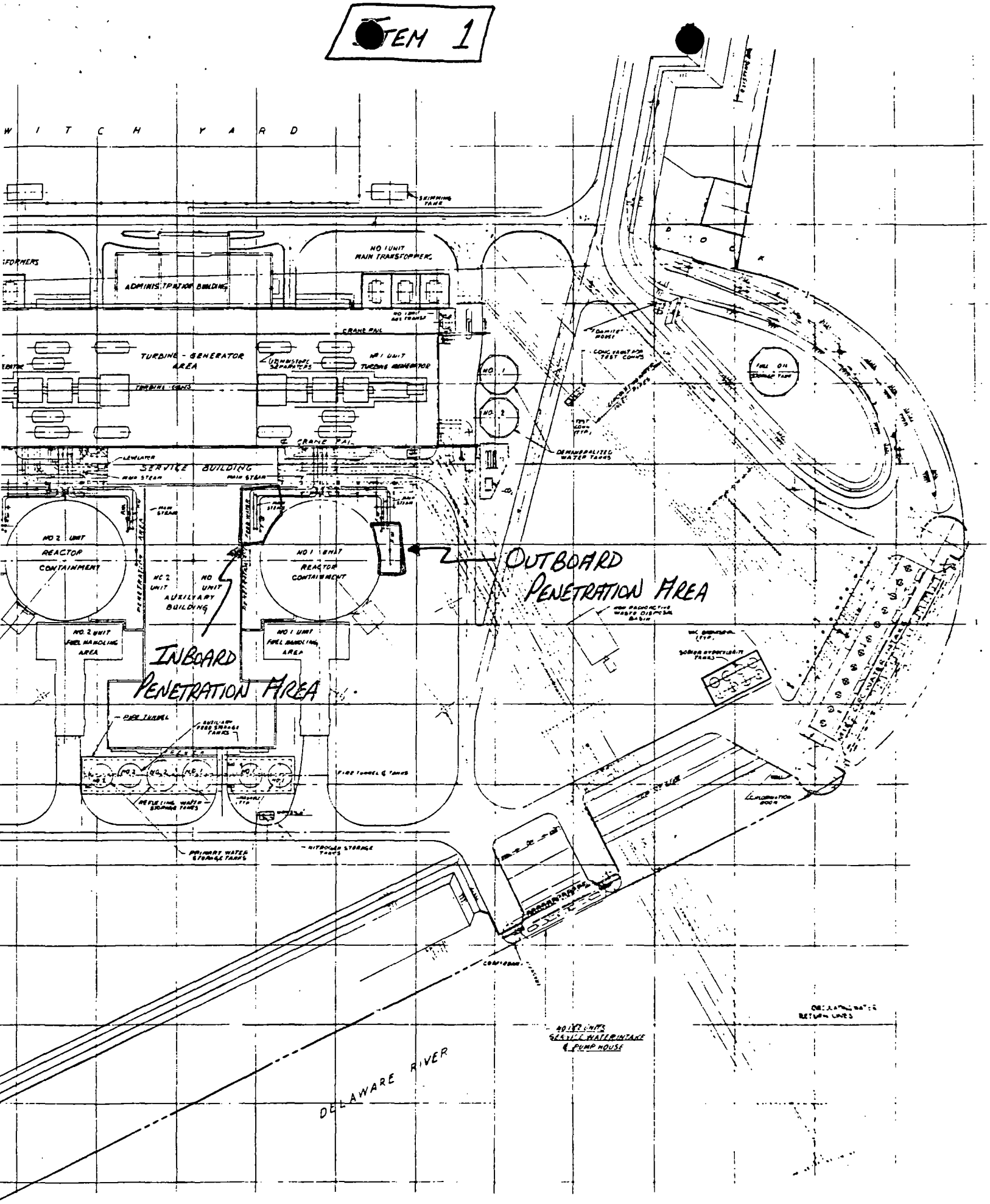

PUBLIC SERVICE ELECTRIC AND GAS COMPANY SALEM NUCLEAR GENERATING STATION	GENERAL PLOT PLAN

ITEM 1

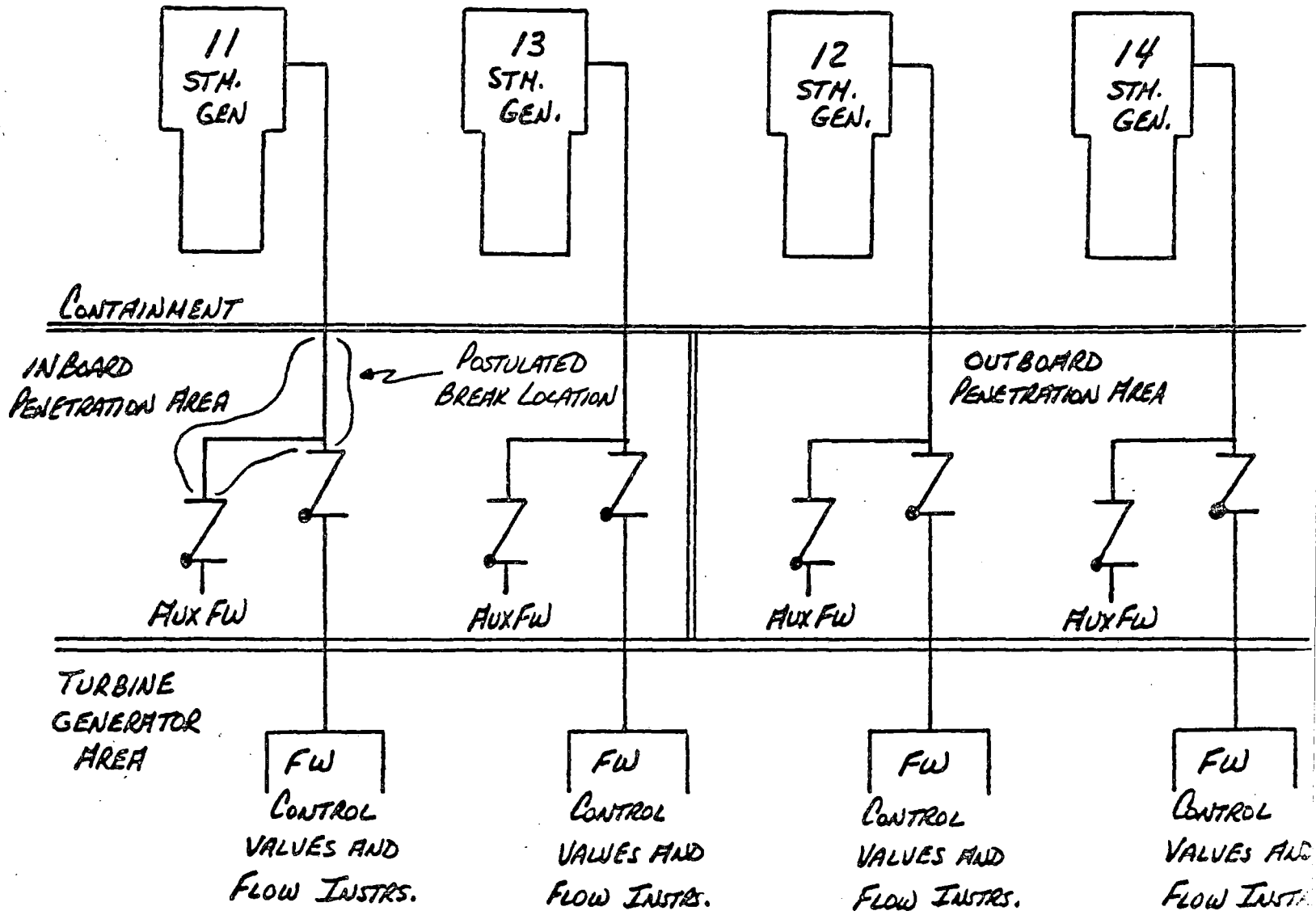

SIMPLIFIED MAIN FEEDWATER DIAGRAM

ITEM 1

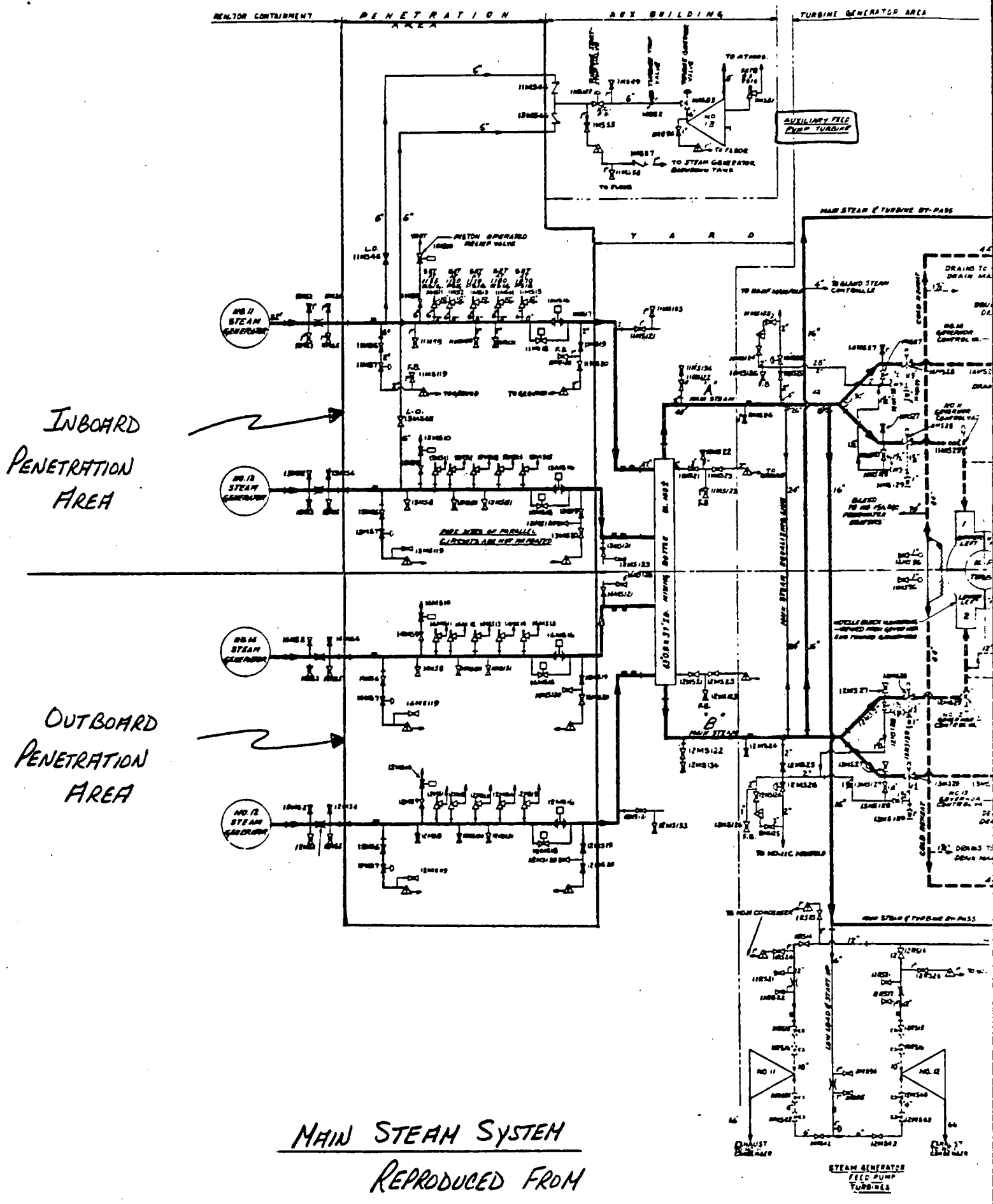

MAIN STEAM SYSTEM

REPRODUCED FROM

FSAR FIGURE 10.2-1

ITEM 1

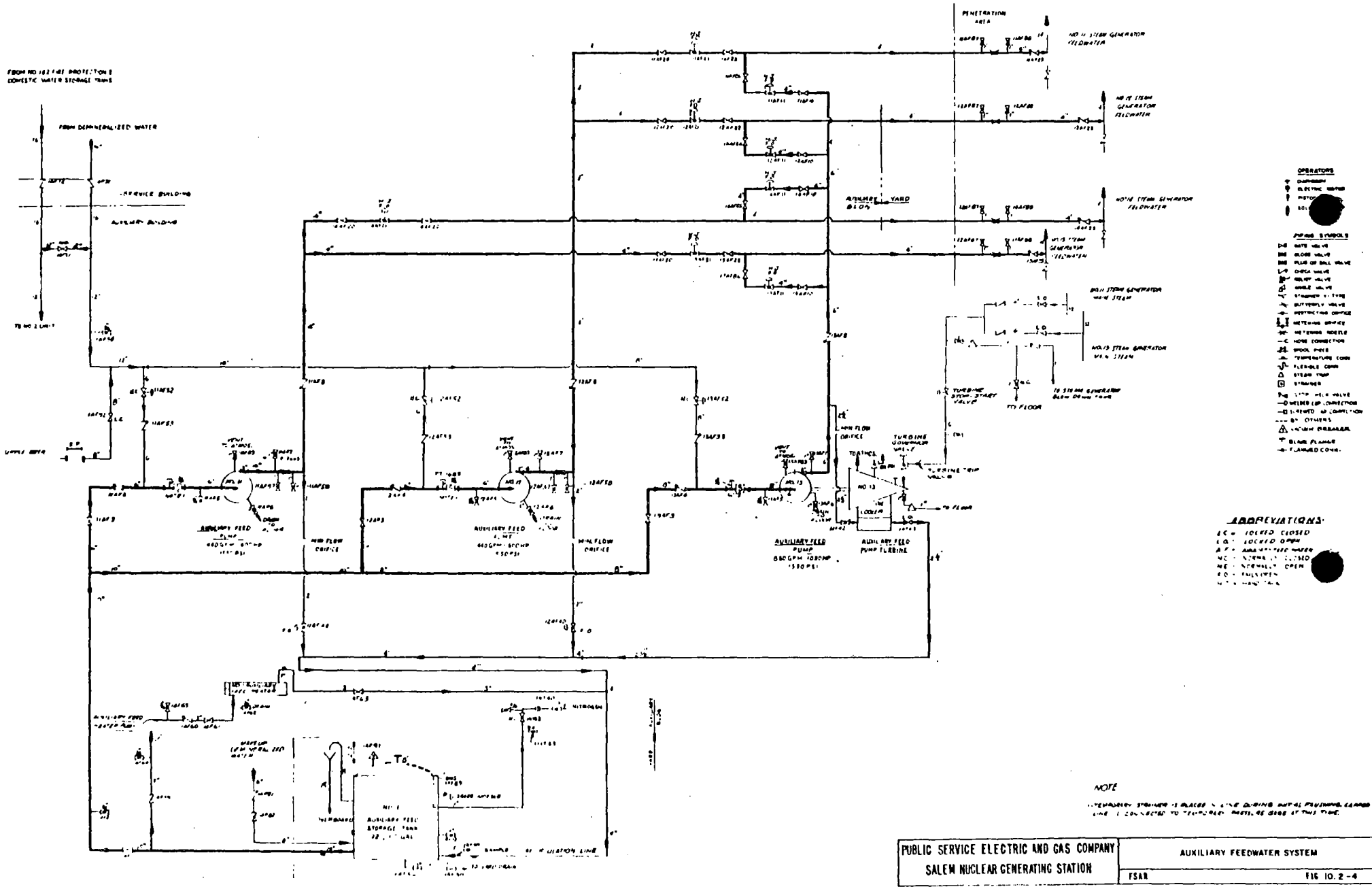

PUBLIC SERVICE ELECTRIC AND GAS COMPANY SALEM NUCLEAR GENERATING STATION	AUXILIARY FEEDWATER SYSTEM
	FSAR FIG 10.2-4

EVALUATION OF POTENTIAL MALFUNCTIONS
DUE TO HIGH ENERGY LINE BREAKS

Item No. 2 - Pressurizer Power Operated Relief Valve Control System

Potential Interaction Identified by Westinghouse

A main feedwater line rupture occurring inside the containment could have an adverse impact on the pressurizer power operated relief valve control system. The adverse environment resulting from the feedwater line rupture could impact the instrumentation and equipment which controls the relief valves. The potential malfunction could result in inadvertent opening of the power operated relief valves or cause them to remain open. This would result in decreasing primary system pressure with eventual hot leg boiling dependent on the size of the feedwater line rupture. This particular accident and sequence of events could lead to results more limiting than those presented in FSAR analyses.

Analysis/Safety Implications

The pressurizer power operated relief valve control system at Salem is pneumatic with solenoid valves for open/close control. The solenoids are operated by electrical signals from the pressurizer control system which utilizes pressurizer pressure as the control parameter. The pressurizer pressure instrumentation and the solenoid valves for the power operated relief valves were designed and qualified for post-accident operation within the containment. In addition the cabling and electrical connections for the solenoid valves and pressure transmitters have been designed and qualified for post accident operation. The environmental qualification of instrumentation, control and electrical equipment located within the containment has been discussed in our response to Bulletin 79-01.

A feedwater line break outside of the containment cannot cause an adverse environment which could affect the pressurizer power operated relief valves.

Item No. 2 (Cont'd)

The pressurizer power operated relief valves control system has been environmentally qualified for post accident operation within the containment. Potential inadvertent operation of the relief valves as postulated by Westinghouse will not occur at Salem due to the design characteristics of the system.

Corrective Action

None required.

Operator training already stresses the importance of maintaining reactor coolant system pressure above saturated pressure to prevent core boiling as a result of an open pressurizer power operated relief valve.

EVALUATION OF POTENTIAL MALFUNCTIONS
DUE TO HIGH ENERGY LINE BREAKS

Item No. 3 - Main Feedwater Control System

Potential Interaction Identified by Westinghouse

A small feedwater line rupture occurring outside the containment in either the main or auxiliary feedwater lines between the containment penetration and check valve could have an adverse effect on the main feedwater control system. The adverse environment resulting from the feedwater line rupture could impact the instrumentation and equipment which controls the main feedwater system. The potential malfunction could result in a condition such that all steam generators are at low-low water level at the time of reactor trip. This particular accident and ensuing conditions could lead to results more limiting than those presented in FSAR analyses.

Analysis/Safety Implications

The postulated high energy line break for this potential interaction occurs in the mechanical penetration areas at the Salem plant (refer to attached figures). The main feedwater control system employs a three element control scheme. Steam generator level, steam flow and feedwater flow parameters are utilized for feedwater regulation. The main feedwater flow instrumentation and the main feedwater control valves are located in the Turbine Building which is not affected by the adverse environment from the postulated feedwater line rupture. The steam generator level and steam flow instrumentation is located in the containment which is also not subject to the adverse environment resulting from the break. In addition, the cabling for this equipment is not routed through the postulated break area.

A feedwater line break inside of the containment will not cause a potential misoperation of the main feedwater control system. The steam generator level and steam flow instrumentation and associated cabling located inside the containment has been qualified for post accident operation. The remaining items

Item 3 (Cont'd)

which are part of the feedwater control system are not located in the area subject to the adverse environment from the postulated pipe break. A main feedwater line break in the penetration area upstream of the feedwater check valves will not result in a plant condition where a potential feedwater control system failure could cause consequences more limiting than existing safety analyses.

The physical location and design of the main feedwater control system equipment and cabling at Salem precludes the possibility of occurrence of this potential interaction scenario as postulated by Westinghouse.

Corrective Action

None required.

ITEM 3

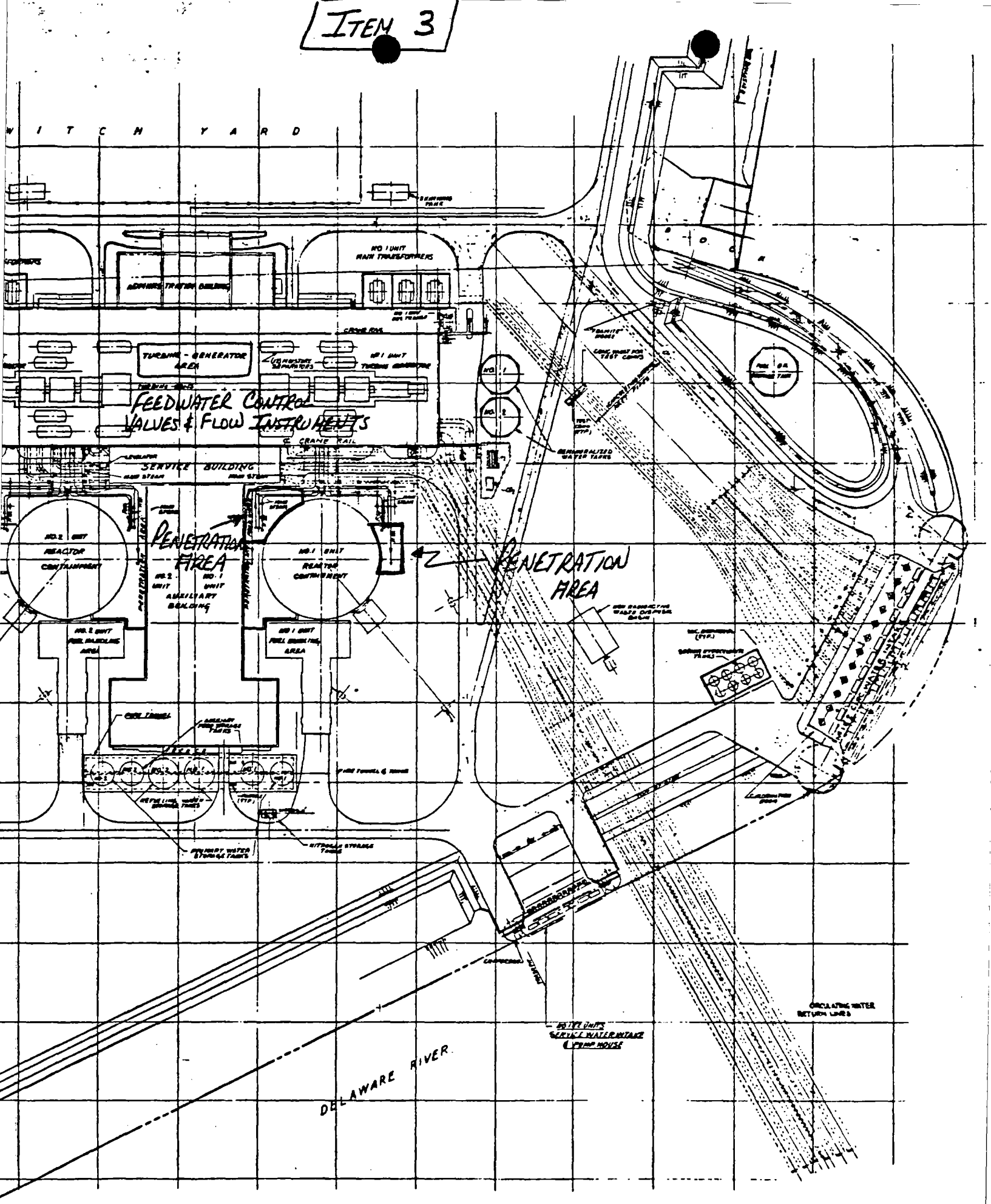

PUBLIC SERVICE ELECTRIC AND GAS COMPANY SALEM NUCLEAR GENERATING STATION	GENERAL PLOT PLAN
	FSAR FIG. 1.2-1

ITEM 3

POSTULATED BREAK LOCATION IN ANY ONE OF THE CIRCLED AREAS

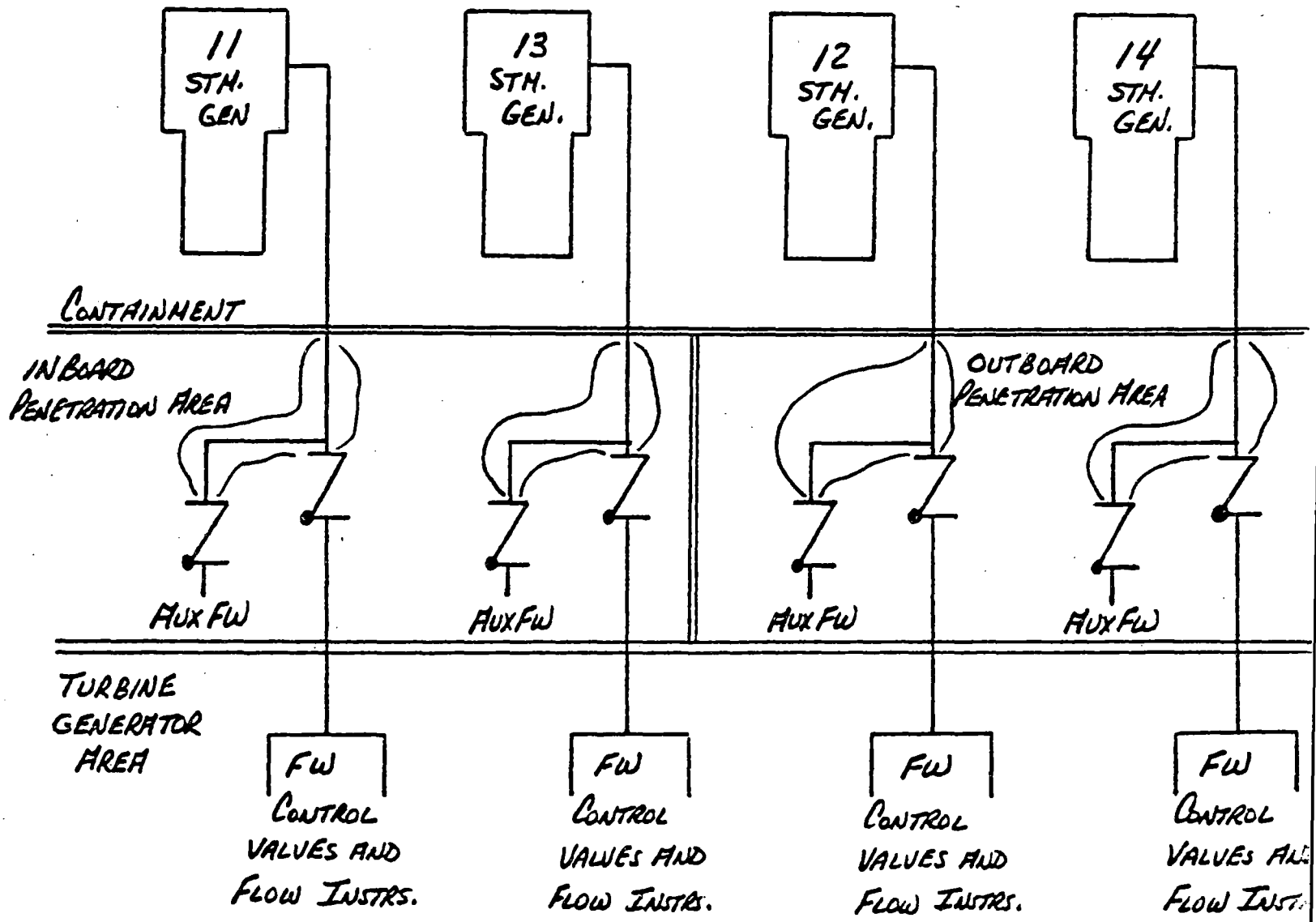

SIMPLIFIED MAIN FEEDWATER DIAGRAM

EVALUATION OF POTENTIAL MALFUNCTIONS
DUE TO HIGH ENERGY LINE BREAKS

Item No. 4 - Rod Control System

Potential Interaction Identified by Westinghouse

An intermediate steamline rupture of approximately 0.1 to 0.25 square feet occurring inside the containment with the unit at a power level of 70-100% could have an adverse effect on the rod control system. The adverse environment resulting from the steamline rupture could impact the excore detectors, connectors and associated cabling causing an erroneous signal to the rod control system. With the rod control system in the automatic control mode, this potential environmentally induced failure could cause the control rods to begin stepping out prior to reactor trip. A reactor trip occurs for an intermediate steamline rupture upon overpower ΔT in a time frame of one to two minutes following the break (WCAP 9226). This particular sequence of events would result in a minimum DNBR below 1.30 which exceeds existing licensing criteria and FSAR analyses.

Analysis/Safety Implications

The power range excore detectors at Salem are physically located in detector wells outside the reactor vessel on centerline with the reactor core (refer to attached figures). The location of the detectors preclude their immediate exposure to an adverse environment resulting from a main steam line break. The detector well is situated in such a fashion as to isolate it from the main containment environment. The equipment and concrete surrounding the detector wells will act as a thermal barrier to limit immediate environmental impact.

The normal operating environment of the detectors is maintained at less than 135°F. The manufacturer's specification for the detectors indicates a maximum temperature range of 300°F with a pressure of 180 psig and 100% relative humidity. The cabling within the detector well is a mineral filled coaxial

Item 4 (Cont'd)

cable hermetically sealed at the detector ionization chamber. The cabling from the detector well to the electrical penetrations was designed and specified by the manufacturer to survive post accident conditions. The electrical connections at the detector well and penetrations are via Amphenol Triaxial Connectors which are protected from the moisture effects of the environment by a Raychem heat shrink tube.

An analysis of containment environments under steamline break accident conditions was presented in the FSAR in response to Question 5.82. The series of breaks analyzed indicated that the peak ambient containment temperature is under 350°F and occurs in the time frame of one to two minutes.

A steam line break outside of the containment cannot cause an adverse environment which could affect the excore detectors or the rod control system.

The design characteristics of the detectors and cabling and their location within the containment indicate that it is highly improbable that a main steamline break would impair their function within two minutes following the break to cause a potential misoperation of the rod control system prior to reactor trip. The potential interaction scenario as postulated by Westinghouse does not appear to be credible at Salem.

Corrective Action

None required.

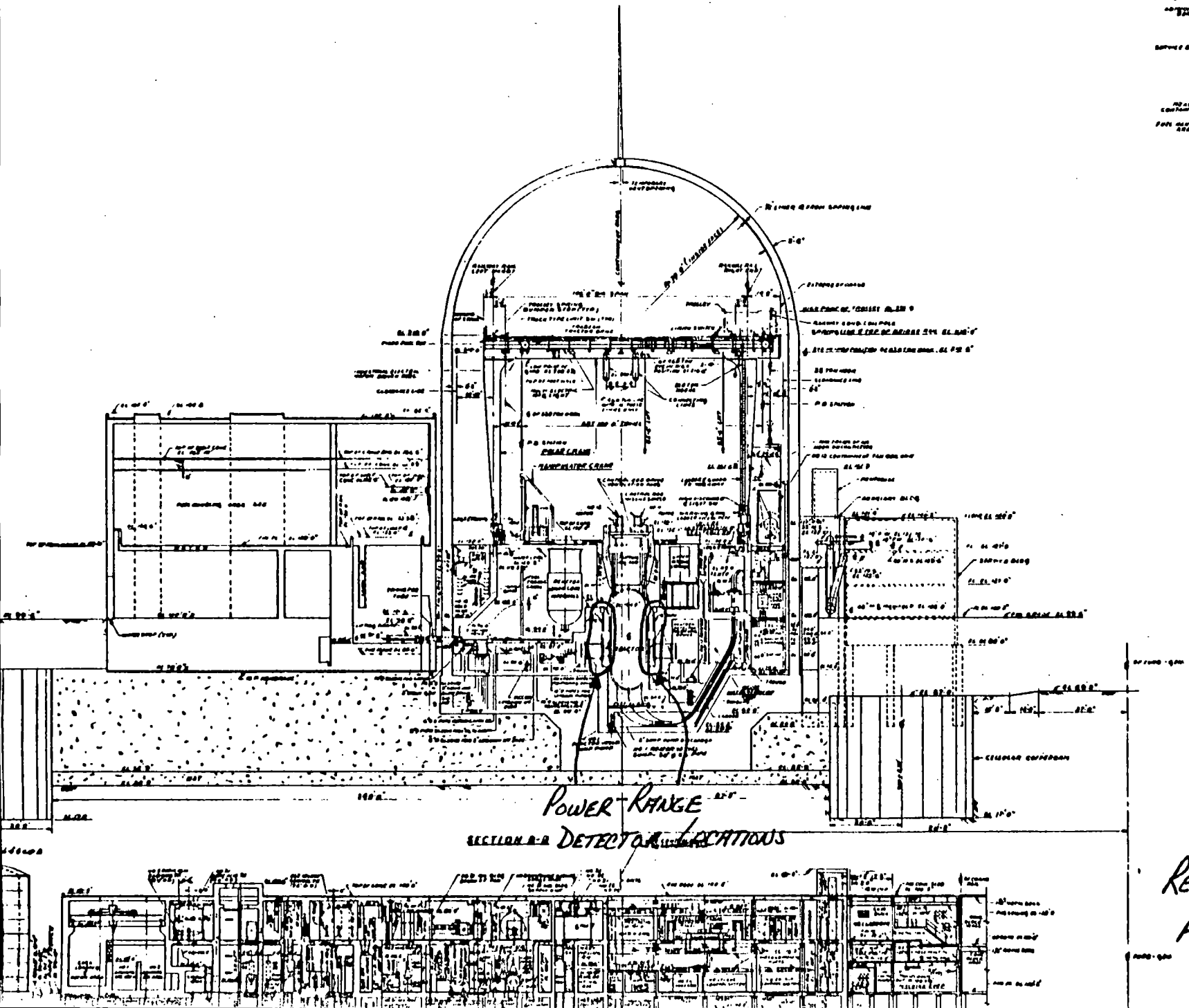

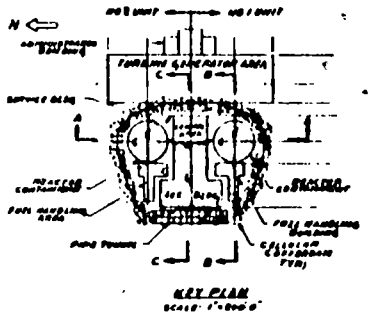

ITEM No. 4

REPRODUCED FROM FSAR FIGURE 1.2-7

ITEM 4

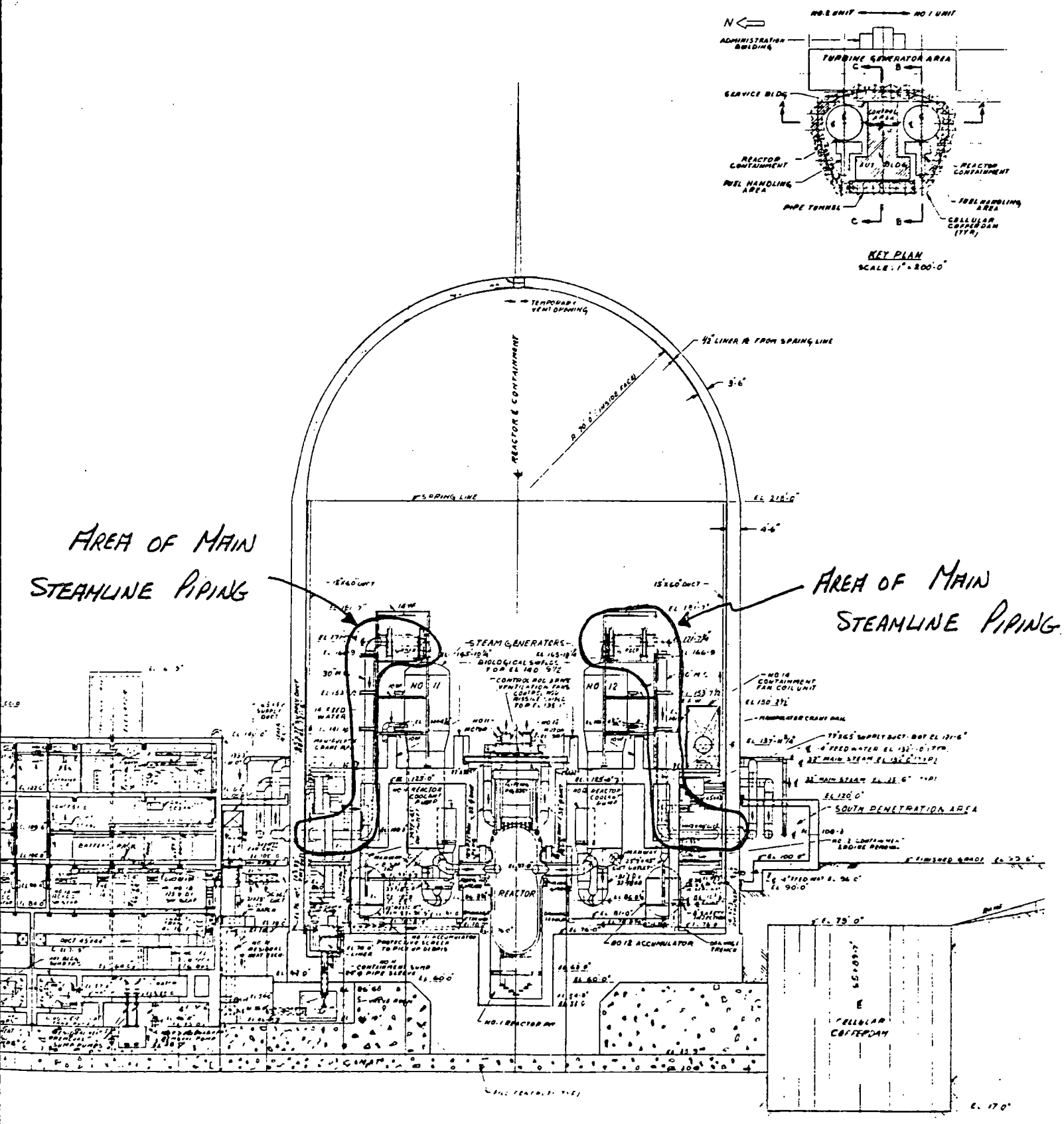

PUBLIC SERVICE ELECTRIC AND GAS COMPANY SALEM NUCLEAR GENERATING STATION	AUXILIARY BUILDING & REACTOR CONTAINMENT ELEVATION

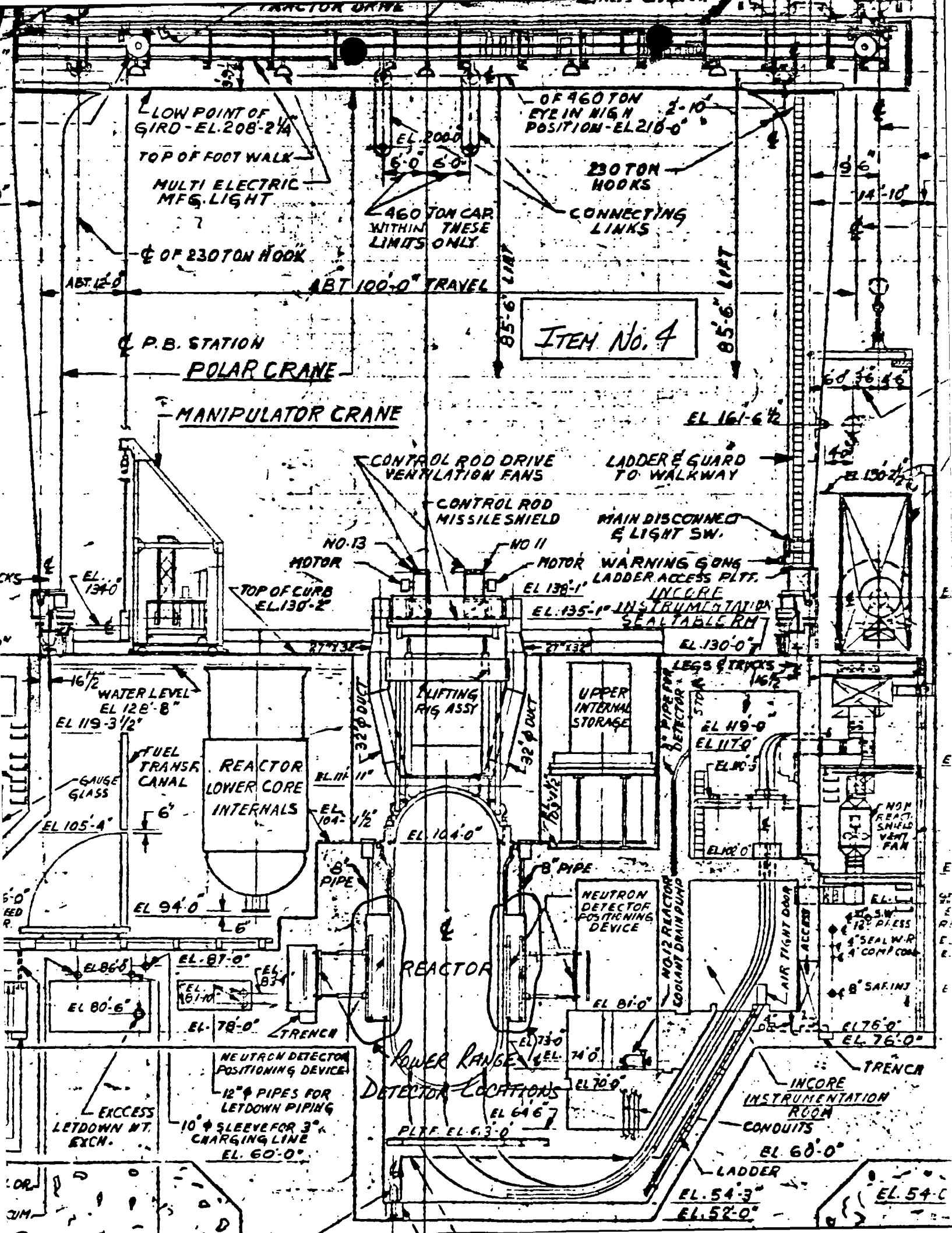
TRACTOR DRIVE
LOW POINT OF GIRD - EL. 208'-2 1/4"
TOP OF FOOT WALK
MULTI ELECTRIC MFG. LIGHT
℄ OF 230 TON HOOK
EL. 200'-0"
6'-0" 6'-0"
460 TON CAR WITHIN THESE LIMITS ONLY
℄ OF 460 TON EYE IN HIGH POSITION - EL. 210'-0"
230 TON HOOKS
CONNECTING LINKS
ABT. 12'-0"
ABT. 100'-0" TRAVEL
85'-6" LIFT
85'-6" LIFT
ITEM No. 4
℄ P.B. STATION
POLAR CRANE
MANIPULATOR CRANE
EL. 161'-6 1/2"
CONTROL ROD DRIVE VENTILATION FANS
LADDER & GUARD TO WALKWAY
CONTROL ROD MISSILE SHIELD
MAIN DISCONNECT & LIGHT SW.
NO. 13 MOTOR
NO. 11 MOTOR
WARNING GONG
LADDER ACCESS PLTF.
EL. 138'-1"
INCORE INSTRUMENTATION SEAL TABLE RM
EL. 135'-1"
EL. 130'-0"
EL. 134'-0"
TOP OF CURB EL. 130'-2"
27" x 32"
LEGS & TRUCKS
WATER LEVEL EL. 128'-8"
EL. 119'-3 1/2"
FUEL TRANSF. CANAL
GAUGE GLASS
REACTOR LOWER CORE INTERNALS
32" ϕ DUCT
LIFTING RIG ASSY
UPPER INTERNAL STORAGE
8" PIPE FOR DETECTOR
EL. 119'-0"
EL. 117'-0"
EL. 105'-4"
EL. 104'-0"
8" PIPE
NEUTRON DETECTOR POSITIONING DEVICE
NO. 12 REACTOR COOLANT DRAIN PUMP
AIR TIGHT DOOR
ACCESS
NOM REACT. SHIELD VENT FAN
EL. 94'-0"
EL. 86'-0"
EL. 87'-0"
EL. 80'-6"
EL. 78'-0"
TRENCH
REACTOR
EL. 81'-0"
EL. 76'-0"
8" SAF. INJ.
LOWER RANGE DETECTOR LOCATIONS
EL. 73'-0"
EL. 74'-0"
EL. 70'-0"
EL. 64'-6"
PLTF. EL. 63'-0"
NEUTRON DETECTOR POSITIONING DEVICE
12" ϕ PIPES FOR LETDOWN PIPING
10" ϕ SLEEVE FOR 3" CHARGING LINE
EL. 60'-0"
EXCCESS LETDOWN HT. EXCH.
INCORE INSTRUMENTATION ROOM
CONDUITS
EL. 60'-0"
LADDER
EL. 54'-3"
EL. 52'-0"
EL. 54'-0"