SAFETY EVALUATION BY THE OFFICE OF

NUCLEAR REACTOR REGULATION

RELATING TO THE MODIFICATION OF THE

SPENT FUEL STORAGE POOL

FACILITY OPERATING LICENSE NO. DPR-70

PUBLIC SERVICE ELECTRIC & GAS COMPANY

SALEM NUCLEAR GENERATING STATION UNIT NO. 1

DOCKET NO. 50-272

7902150048 G

1.0 INTRODUCTION

By letter dated November 18, 1977, as revised on February 14, 1978, and as supplemented on December 13, 1977, May 17, July 31, August 22, October 13 and 31, November 20 and December 22, 1978, and January 4, 1979, Public Service Electric & Gas Company, et al. (PSE&G) requested an amendment to facility Operating License No. DPR-70 for the Salem Nuclear Generating Station, Unit No. 1. The request was made to obtain authorization to provide additional storage capacity in the Salem Unit No. 1 Spent Fuel Pool (SFP). By letter dated April 12, 1978, the licensee submitted Amendment No. 42 to the Application for Licenses for the construction and operation of the Salem Nuclear Generating Station, Units No. 1 and 2, consisting of changes to the Final Safety Analysis Report including a revised description of the spent fuel storage facilities for both units to reflect the proposed design changes of the Unit No. 1 license amendment application. The proposed modifications would increase the capacity of each SFP from the present design capacity of 264 fuel assemblies to a capacity of 1170 fuel assemblies.

The increased SFP capacity would be achieved by installing new racks with a decreased spacing between fuel storage cavities. The present rack design has a nominal center-to-center spacing between fuel storage cavities of 21 inches. The proposed new spent fuel racks would be modular stainless steel structures with individual storage cavities to provide a nominal center-to-center spacing of 10.5 inches. Each stainless steel wall of the individual cavities would contain sheets of Boral (Boron Carbide in an aluminum matrix) to provide for neutron absorption. The SFPs are located in separate fuel handling buildings adjacent to the respective reactor containment buildings. The general arrangement and details of the proposed new spent fuel storage racks are shown in Figures 1.2-1 through 1.2-4 of the licensee's revised submittal of February 14, 1978.

The expanded storage capacity of the Unit No. 1 SFP would allow Unit No. 1 to operate until about 1996, or until about 1993 while still maintaining the capability for a full core discharge.

The major safety considerations associated with the proposed expansion of the SFP storage capacity for Salem Unit 1 are addressed below. A separate environmental impact appraisal has been prepared for this proposed action.

2.0 DISCUSSION AND EVALUATION

2.1 Criticality Considerations

The proposed spent fuel storage racks will be an assemblage of open-ended double-walled stainless steel boxes with storage space for one fuel assembly in the cavity of each box. These boxes will be about 14 feet long and will have a square cross section with an inner dimension of 8.97 inches. The nominal distance between the centers of the stored fuel assemblies, i.e., the lattice pitch, will be 10.5 inches. The effective side dimension of the square fuel assembly, which was used in the criticality calculations, is 8.432 inches. This results in an overall fuel region volume fraction of 0.645 in the nominal storage lattice cell. Boral (boron carbide and aluminum) plates are to be press-fitted and seal-welded in the cavities between the double stainless steel walls. In its May 17, 1978 submittal, PSE&G states that stringent in-process inspection and process controls are imposed during manufacturing of the Boral plates to assure that they have a density of at least 0.020 gram of the boron-ten (B-10) isotope per square centimeter of plate. In this full array of storage boxes, there will be two Boral plates between adjacent fuel assemblies. This makes the minimum areal density of boron between fuel assemblies 2.41×10^{21} B-10 atoms per square centimeter.

As stated in PSE&G's February 14, 1978 submittal, the fuel criticality calculations using the proposed new spent fuel racks are based on unirradiated fuel assemblies with no burnable poison and a fuel loading of 44.7 grams of uranium-235 (U-235) isotope per axial centimeter of fuel assembly.

The Exxon Nuclear Company (Exxon) performed the criticality analyses for PSE&G. Exxon's initial calculational method was the KENO-III Monte Carlo program with 18 energy group cross sections, which were obtained from the CCELL, BTR-I and GAMTEC-II programs. These programs were used to determine the effects on the effective multiplication factor (Keff)* in the SFP of mechanical tolerances, fuel and boron loading tolerances, temperature, and fuel density. Exxon then used the KENO-IV Monte Carlo program, with 123 energy group cross sections,

---

*Keff, effective multiplication factor, is the ratio of neutrons from fissions in each generation to the total number lost by absorption and leakage in the preceding generations. To achieve criticality in finite system, Keff must equal 1.0.

which were obtained from the NITAWL and XSDRN programs, to calculate the Keffs for the nominal spent fuel storage lattice and for a postulated worst case, wherein the worst case geometry was assumed along with a 100°C temperature for the water between the fuel assemblies, while the water in the fuel assemblies was assumed to be 20°C. Exxon's calculated value for this worst case Keff is 0.923.

Exxon checked the accuracy of this KENO-IV method by calculating two types of experiments, which were done at the Oak Ridge National Laboratory by E. B. Johnson and G. E. Whitesides. One type was an arrangement of stainless steel clad, uranium dioxide fuel pins in unborated water. The other type was an arrangement of uranium metal fuel pins in unborated water on both sides of a central Boral plate which had a density of 3.8×10^{21} atoms of B-10 per square centimeter. The maximum difference between the calculated and experimental values of Keff was found to be 0.013Δk (or about 1.3 percent).

These storage racks are designed to prohibit the insertion of a fuel assembly anywhere except in prescribed locations. In its May 17, 1978 response to our request for additional information, PSE&G stated that it is not possible to place a fuel assembly either between storage rack modules or between the outer periphery of the storage racks and the spent fuel pool walls.

In response to our request for additional information, PSE&G stated in its May 17, 1978 submittal that neutron transmission tests will be performed on the completed rack modules to verify the presence of all the Boral plates in the racks prior to placing any fuel in the racks.

The above results compare favorably with the results of calculations made with other methods for similar fuel pool storage lattices which also assumed new, unirradiated fuel with no burnable poison or control rods in unborated water. These calculations yield the maximum neutron multiplication factor that could be obtained throughout the life of the fuel assemblies. This includes the effect of the plutonium which is generated during the fuel cycle.

The NRC acceptance criterion for the criticality aspects of fuel storage in high density fuel storage racks is that Keff shall not exceed 0.95, including all uncertainties, under all conditions throughout the life of the racks. This acceptance criterion is based on the overall uncertainties associated with the calculational methods, and it is our judgment that this provides sufficient margin to preclude criticality in

fuel pools. A technical specification which limits Keff in spent fuel pools to 0.95 will be provided to assure this criterion is adhered to.

Since the maximum Keff that could be experienced in spent fuel pools can not practicably be measured (considering at any one time only a limited number of fuel assemblies, mostly irradiated ones, will be in the pool), it is prudent to use a calculated Keff. To preclude any unreviewed increase, or increased uncertainty, in the calculated value which could raise the actual Keff without it being detected, a limit on the maximum fuel loading is also required. Accordingly, we find that the proposed high density storage racks will meet the NRC criterion when the fuel loading in the assemblies described in these submittals is limited to 44.7 grams or less of U-235 per axial centimeter of stored fuel assembly. This restriction will be imposed by a Technical Specification change.

2.1.1 Conclusion

We find that when any number of the Salem plant fuel assemblies, which PSE&G states will have no more than 44.7 grams of U-235 per axial centimeter of fuel assembly, are loaded into the proposed racks, the Keff in the fuel pool will be less than the 0.95 limit. We also find that in order to preclude the possibility of the Keff in the fuel pool exceeding 0.95 without being detected, it is prudent to prohibit the use of these high density storage racks for fuel assemblies that contain more than 44.7 grams of U-235 per axial centimeter of fuel assembly. On the basis of the information submitted, and the Keff and fuel loading limits stated above, we conclude that there is reasonable assurance that the use of the proposed racks will not result in a criticality.

2.2 Spent Fuel Cooling

The licensee considered the additional heat load that would result from the additional fuel assemblies that will be stored in the SFP and calculated the effect of this heat load on the SFP cooling system. A description of the various assumptions considered in this review and the maximum heat loads expected are discussed below.

The licensed core power for Salem Unit No. 1 is 3338 thermal megawatts (MWt). PSE&G plans to refuel annually. This will require the replacement of about 65 of the 193 fuel assemblies every year. In its February 14, 1978 submittal, PSE&G assumed a 150-hour decay time after 1095 effective full power days (EFPD) of reactor operation to calculate the maximum in-pool heat generation rates per fuel assembly. Using the

method given on pages 9.2.5-8 through 14 of the NRC Standard Review Plan with the above assumptions, PSE&G calculated a decay heat load of 55.4 kw for an average power fuel assembly. Using this same method, PSE&G calculated that the maximum SFP heat load during the 18th annual refueling, i.e., the one that fills the pool, will be 18.6 x 10^6 Btu/hr (5.45 MWt).

The SFP cooling system consists of two pumps and one heat exchanger. Each pump is designed to pump 2300 gpm (1.15 x 106 pounds per hour). The heat exchanger is designed to transfer 11.9 x 10^6 Btu/hr (3.35 MWt) from 120°F fuel pool water to 95°F component cooling water, which is flowing through the heat exchanger at a rate of 1.49 x 10^6 pounds per hour.

Should a full core offload be required, PSE&G states that the core would be cooled in the reactor vessel with the residual heat removal system until the SFP cooling system could keep the outlet water temperature from exceeding 150°F. At 150°F, the SFP cooling system will transfer 26.38 x 10^6 Btu/hr (7.36 MWt). For a full core offload after 15 annual refuelings, PSE&G calculated that 570 hours (about 22 days) of decay time would be required before the SFP cooling system, with only one pump operating, would keep the outlet water temperature below 150°F.

2.2.1 Evaluation

PSE&G's calculated fuel pool outlet water temperatures are consistent with the stated cooling water flow rates and the design of the heat exchanger. We calculate that with one pump running at its design capacity and the 150 hour decay heat load in the pool at the 18th refueling (i.e., 18.6 x 10^6 Btu/hr) the maximum spent fuel pool outlet water temperature will be about 134°F, which is consistent with the licensee's calculations.

As stated in Section 9 of the FSAR, up to 100 gpm of makeup water for the SFP is available from the refueling water storage tank, which is designed to seismic Class I criteria. We find that PSE&G's calculated peak heat loads for the SFP with modified racks are conservative and acceptable. We also find that the maximum incremental heat loads that will be added by increasing the number of spent fuel assemblies in the SFP from 264 to 1170 will be 4.5 x 10^6 Btu/hr. This is the difference in peak heat load for a full core offload that essentially fill the present and the modified pool. The total peak heat load resulting from a full core offload will be 42.1 x 10^6 Btu/hr for the modified design as compared to 37.6 x 10^6 Btu/hrs for the existing rack design. For the full core offload that fills the pool (i.e., 15 prior annual refuelings), we calculate that the maximum required cooling time in the reactor vessel

that will be needed to keep the spent fuel pool water temperature below 150°F with only one spent fuel pool cooling pump running will be about the same as the 570 hours calculated by PSE&G. Therefore, the maximum delay in removing a full core from the reactor vessel would be about 22 days.

Assuming an SFP water temperature of 150°F, the minimum possible time to achieve bulk pool boiling after any credible additional failure in the SFP cooling system would be about six hours. After bulk boiling commenced, the maximum evaporation rate would be about 56 gpm. We find that six hours would be sufficient time for PSE&G to establish a 56 gpm makeup rate. We also find that under bulk boiling conditions the surface temperature of the fuel will not exceed 350°F. This is an acceptable temperature from the standpoint of fuel element integrity and surface corrosion.

2.2.1 Conclusion

We find that the present cooling capacities in the spent fuel pool of the Salem Unit No. 1 will be sufficient without modification to handle the incremental heat load that will be added by the proposed modifications. We also find that this incremental heat load will not alter the safety considerations of spent fuel pool cooling from that which we previously reviewed and found to be acceptable.

2.3 Installation of Racks and Fuel Handling

PSE&G's present plans are to modify the spent fuel storage racks at both Salem Nuclear Generating Station Units 1 and 2 prior to offloading spent fuel into either pool. If these plans are realized, at the time of the modification, the pools will not be contaminated with radioactivity and the racks can be changed without having water in the pools.

Since there would be no fuel assemblies in the fuel pool during the modification, it would not be possible to have an accident involving radioactivity. In the event that the modifications are not performed until after the first refueling outage for either Unit 1 or 2, PSE&G will be required to provide the staff with its intended procedures and safety precautions that will be used to ensure that an accident involving irradiated fuel does not occur.

After the new racks are installed in the pool, the fuel handling procedures that will be implemented in and around the pool will be the same as those procedures that were in effect prior to the modifications. These were previously reviewed and found acceptable by the NRC.

The spent fuel handling equipment has a separate spent fuel cask loading pool adjacent to the spent fuel pool, connected by a canal. Mechanical stops on the crane prevent passage of a spent fuel cask over or near the spent fuel pool.

Even if the modification were to be performed with water in the spent fuel pool, and should the cask drop or tip while in the handling building, any resultant water loss from the cask loading pit would neither create a safety hazard nor affect other safety-related equipment. Since two gates separate the cask loading pit from the spent fuel pool, water leakage from the spent fuel pool in the event of a cask drop directly over the loading pit will be prevented.

The NRC staff has under way a generic review of load handling operations in the vicinity of spent fuel pools to determine the likelihood of a heavy load impacting fuel in the pool and, if necessary, the radiological consequences of such an event. At present Salem 1 is prohibited by its technical specifications from the movement of loads with weight in excess of 2500 pounds over spent fuel assemblies in the SFP.* This restriction is to limit the maximum weight, i.e., a fuel assembly, that can be carried over the stored fuel assemblies until our generic review is completed. There are two other lighter loads, however, identified by the licensee, that are handled over stored fuel assemblies. These loads are the Fuel Assembly Handling Fixture and Burnable Poison Rod Assembly Tool. Although lighter than a single fuel assembly, these two loads could develop greater kinetic energy should they be dropped because of greater potential drop heights. This larger kinetic energy could theoretically cause more damage to stored fuel assemblies than that calculated assuming a single dropped fuel assembly. The licensee has therefore examined the use of these loads and has provided the information presented in Table 2.3-1.

As indicated, the maximum potential kinetic energy of an unloaded Fuel Assembly Handling Fixture is approximately twice that of a fixture when carrying a fuel assembly. And the maximum potential energy contained in the Burnable Poison Rod Assembly Tool is approximately four (4) times that of a dropped fuel assembly and handling fixture.

Based on the breaking strength of the wire rope reeving system, the design factor when handling an unloaded fixture or tool is 160:1 and 86:1, respectively. Further, the licensee points out

*Salem Unit 1 Technical Specifications, Section 3.9.7.

that whereas the fuel handling crane is limited to handling loads not exceeding 2500 pounds it is rated and tested, per OSHA (ANSI B 30.2) requirement, for 10,000 pounds (5 tons). In addition, as indicated in Table 2.3-1, the design factors for the attachment points for the fixture and tool (in an unloaded condition) are 28:1 and 17:1, respectively.

Based on the above, we believe that the likelihood of a drop of the unloaded fixture or tool due to either a structural failure of the crane or reeving components is very remote because of the existing large design margins. In addition to the design factors indicated above, to preclude a load drop due to it becoming disengaged from the crane hook, or failure of the hook itself, the licensee has indicated that it will provide a back up means of supporting the fixture or tool, as illustrated in Figure 2.3-1 (as provided in the licensee's December 22, 1978 submittal), in addition to the hook-throat latch type safety hook. This backup cable sling will have a safety factor comparable to the crane, i.e., 5:1. Therefore, if the tool or fixture should be improperly engaged or otherwise become disengaged from the crane hook, there is reasonable assurance that, it would be supported by the wire rope backup cable and is, therefore, acceptable.

The fuel handling crane is rated for 5 tons and tested in accordance with OSHA (ANSI B 30.2) requirements. The ratio of the weight of the unloaded fixture and tool to the cranes rated load capacity is 1:31 and 1:15, respectively. These margins, in our view, are sufficient to preclude their dropping due to a structural crane failure.

2.3.1 Conclusion

The consequences of fuel handling accidents in the spent fuel pool area are not changed from those presented in the Safety Evaluation Report dated October 1974. This design basis accident is independent of the number of fuel assemblies in the pool and is defined for fuel with the least decay after shutdown for refueling. The accident is assumed to occur at a time after shutdown identified in the Technical Specifications as the earliest time fuel handling operations may begin. The Technical Specifications which prohibit loads greater than 2500 pounds allow flexibility in the movements of fuel and other relatively light loads, while providing reasonable assurance that the consequences of the design basis accident will not be exceeded.

Table 2.3-1

	Fuel Assembly Handling Fixture	Burnable Poison Rod Assembly Tool
Maximum Drop Height of Empty Tool over storage racks, ft.	15	15
Weight of Empty Tool, lbs.	350	650
Maximum Kinetic Energy at Impact, ft. lbs.	5250	9750
Maximum Drop Height of Loaded Tool over storage racks, ft.	1 1/4	1 1/4
Maximum Weight of Loaded Tool, lbs.	1965	2265
Maximum Kinetic Energy at Impact ft. lbs.	2456	2831
Unloaded Tool, Wire Rope Design Factor (based on breaking strength) - Reeving system	350/56000	650/5600
Loaded Tool, Wire Rope Design Factor (based on breaking strength) - Reeving system	1965/56000	2265/5600
Design Factor of remaining portions of fuel handling crane with respect to its load ng of 5 tons	5:1	5:1
Design Factor of Tool Inducing the Connection Point (loaded condition)	5:1	5:1
Design Factor of Tool Including the Connection Point (unloaded condition)	28:1	17:1

Note 1: Fuel Handling crane is load tested per Chapter 2-2 of ANSI B30.2

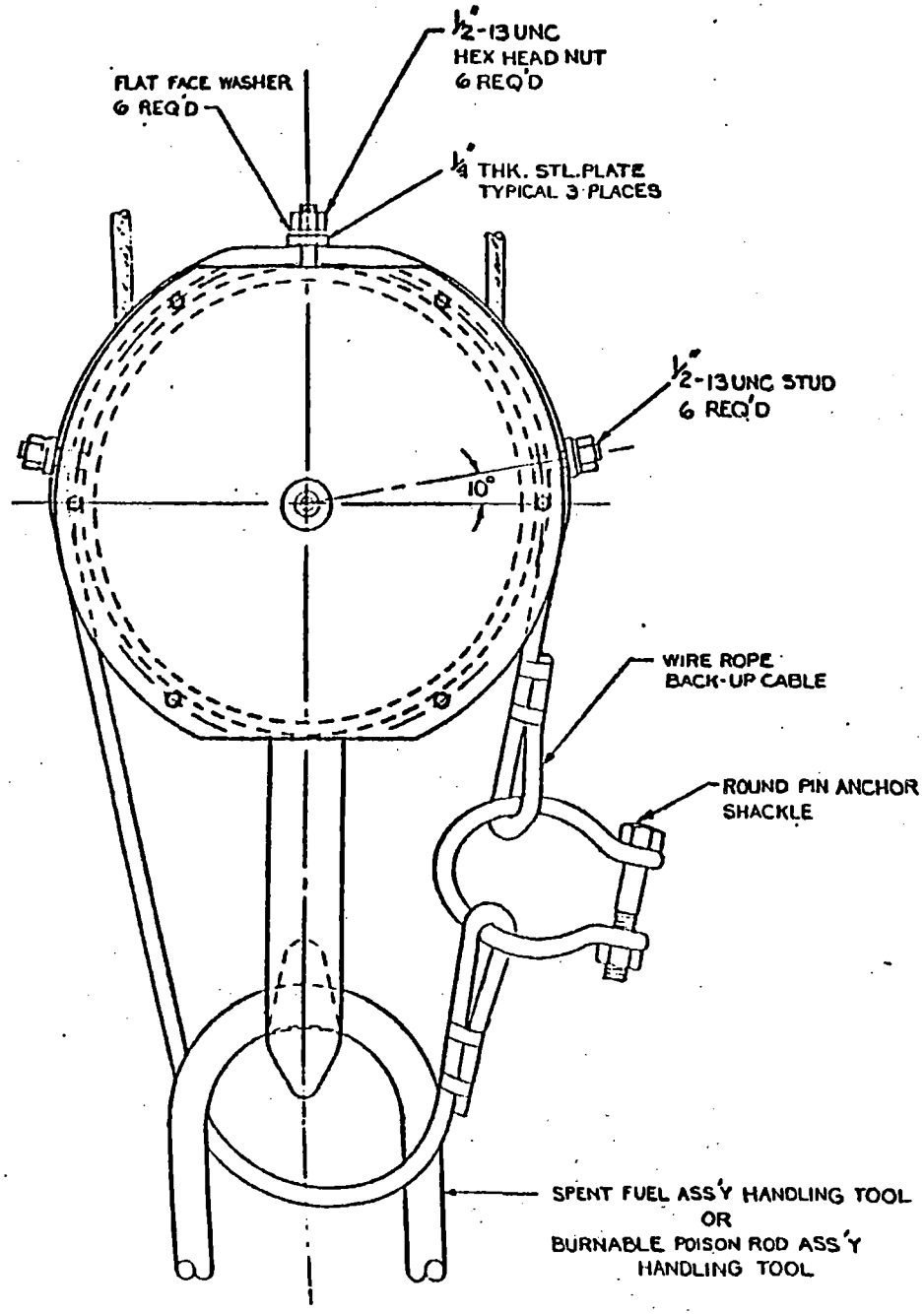
½"-13 UNC
HEX HEAD NUT
6 REQ'D
FLAT FACE WASHER
6 REQ'D
¼" THK. STL. PLATE
TYPICAL 3 PLACES
½"-13 UNC STUD
6 REQ'D
10°
WIRE ROPE
BACK-UP CABLE
ROUND PIN ANCHOR
SHACKLE
SPENT FUEL ASS'Y HANDLING TOOL
OR
BURNABLE POISON ROD ASS'Y
HANDLING TOOL

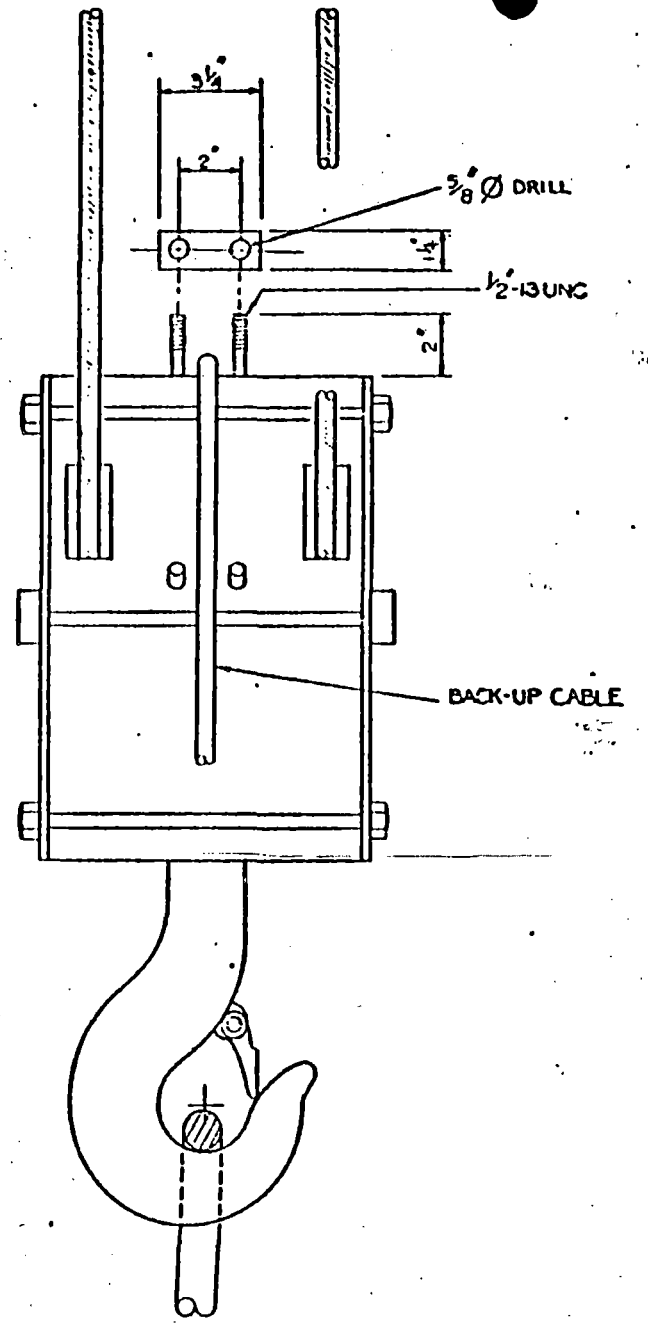
3¼"
2"
⅝" Ø DRILL
¼"
½"-13 UNC
2"
BACK-UP CABLE

FIGURE 2.3-1

2.4 Structural and Mechanical Design

The current fuel storage racks in the Salem Unit 1 spent fuel pool provides for a storage capacity of 264 fuel assemblies. The proposed modification consists of replacing the existing racks which will provide a storage capacity of 1170 fuel assemblies with a nominal center-to-center spacing between fuel assemblies of 10-1/2 inches. The storage cells are constructed of type 304 stainless steel, aluminum-clad Boral material, with the remaining portions of the rack structures constructed of type 304 stainless steel.

The design uses a stiffened module base which directly supports the fuel assemblies and an upper box structure which contains the spent fuel storage cells. These structures are assembled by welding. The rack bases are supported off the spent fuel pool floor by seven (7) support legs on each module. The upper box structure consists of a top grid assembly, mid-height peripheral members and plate diaphragms (stiffened, where necessary, to prevent shear/compression buckling), and are welded to the module base. Each cell is a square cross section formed from an inner shroud of stainless steel, a center sheet of aluminum clad Boral, and an outer shroud of stainless steel. A flared guide and transition section is provided at the top of each storage cell.

2.4.1 Evaluation
Structural and Mechanical

The supporting arrangements for the modules, including their restraints, the design, the fabrication, the installation procedures, the structural design and analyses procedures for all loadings, including seismic and impact loadings, the load combinations, the structural acceptance criteria, the installation, and the applicable industry codes were all reviewed in accordance with the applicable portions of the NRC OT Position for Review and Acceptance of Spent Fuel Pool Storage and Handling Applications, April 1978.

The fuel pool is located in the Fuel Handling Building. A response spectrum dynamic seismic analysis of the fuel rack structures was performed using horizontal and vertical response spectra as seismic input which conform to those in the Salem FSAR and approved in the staff's SER for Salem Units 1 and 2. The seismic response spectra for the spent fuel storage pool floor were generated from the horizontal and the vertical time-history accelerations calculated at the level of the pool floor in the seismic analysis of the fuel handling building. The seismic modal responses of the racks and the three spatial earthquake components of rack response were combined in accordance with

Standard Review Plan Section 3.7.2 and Regulatory Guide 1.92, Rev. 1, entitled, "Combining Modal Responses and Spatial Components in Seismic Response Analyses."

The damping values utilized in the seismic analysis of the rack modules were consistent with those approved in the Salem FSAR and approved in the staff's SER for Salem Units 1 and 2. No credit was taken for additional damping due to the racks being submerged in water. The amount of mass added to a rack to account for submergence in the pool was taken to be the mass of the water enclosed in the spent fuel pool storage rack.

Time-history analyses were performed to account for the effects of the clearance gap between a storage cell and the fuel assembly contained therein. The analysis was performed using an artificially generated time-history whose response spectrum enveloped the floor level response spectrum for the floor of the Salem fuel storage pools. (The method was the same as that approved previously for Arkansas Nuclear One in the December 17, 1976 NRC Safety Evaluation Report for its spent fuel rack modification.) The results of the analysis were that the maximum combined support reactions calculated were 1.18 times the maximum combined reactions calculated by the simplified linear elastic time-history analysis with no gap between the storage cell walls and the fuel assembly. Therefore, the seismic loads developed by the linear elastic analysis of the complete rack structure were increased by a factor of 1.18. A maximum impact load on the fuel cell associated with the 1.18 impact factor was shown to be much less than the load capability of the fuel cell can walls. No adverse effects on the rack structures or fuel assemblies resulted from these considerations. Time-history analyses were also performed to account for the effect of rack modules potentially sliding on the pool floor and impacting the pool walls at the lower wall restraints. A row of four modules along the length of the pool was modeled.

Each module was modeled as a simplified two degree of freedom system with gap elements included at all thermal expansion gaps and friction elements provided to account for the racks sliding on the pool floor. The time-history used was the same as that developed for the storage cell/fuel assembly analysis. The friction factors between the module feet and the stainless steel floor were taken from General Electric Report No. 60 GL20, "Investigation of the Sliding Behavior of a Number of Alloys Under Dry- and Water-Lubricated Conditions," by R.E. Lee, Jr., January 30, 1960, which was published by General Electric. Subsequent evaluation indicated that the values used are consistent with the values contained in a report entitled,

"Friction Coefficients of Water-Lubricated Stainless Steels for a Spent Fuel Rack Facility," by Professor Ernest Robinowicz of the Massachusetts Institute of Technology. This analysis yielded a conservative reaction force at the pool wall which was used in the design of the wall restraints since it is improbable that the racks would slide at all. In addition, the rack module base was analyzed using this impact force directly superimposed on the other seismic and dead weight loads yielding no adverse effects.

The rack material properties for structural components used in the analysis of the fuel racks were taken from Appendix I of Section III of the ASME Boiler and Pressure Vessel Code. The material properties consistent with a temperature of 150°F were used for all load cases at normal operating temperatures and the material properties consistent with a temperature of 240°F were used for the load cases at maximum temperature.

Results of the seismic analysis show that the racks are capable of withstanding the loads associated with all the design loading conditions without exceeding allowable stresses.

The racks were also designed to withstand the local as well as gross effects of the impact of a fuel assembly dropped from a height of 15 inches such that no significant deformation of the rack module configuration will occur for the postulated dropped fuel assembly. The local effects were determined through a test on 2-foot long sections of a Boral poison spent fuel cell together with the flared lead in section to determine the load-deflection characteristics of the cells. Two cases were considered, one where the assembly falls vertically directly on one cell but rotated 45° such that the corners of the assembly hit the side of the cell, and the other where the assembly falls vertically at the center of a group of four cells. The first case results in maximum force and deflection on an individual cell while the second case results in a maximum force being applied to the rack structure. In both cases crushing of the cell was shown to be limited to the upper 7 inches of the lead-in section, above the rack module upper grid structure and above stored fuel assemblies. The effects of a dropped assembly accident inside a storage cell was also evaluated. The impact energy was absorbed by the 1/4-inch base plate and a small amount of bending distortion of the base assembly beam members. In addition, the effects of a dropped assembly accident, in which the assembly rotates as it drops, were evaluated. In this case, the assembly impacts a row of storage cells and comes to rest on top of the rack modules. The results indicate that this case results in lower loads than the simple vertical drop case.

The fuel pool structure consists of concrete walls and floor lined with type 304 stainless steel liner plate. The increase in floor loading due to the proposed spent fuel storage racks is well under 1% of the total mass lumped at the level in the fuel handling building analytical model. The walls have been investigated for the seismic effect of the heavier racks and stored fuel. The new high density racks have no appreciable effect on the structural stability and seismic response of the fuel handling building. The pool structure meets all allowable limits imposed on the design in the FSAR considering any new loadings.

Material Considerations

In August 1978, the staff was made aware of a problem at the Monticello facility that had been identified with regard to spent fuel storage racks similar in design to those proposed for use at Salem Unit No. 1. The problem involved the in-leakage of water into the stainless steel cans, such that hydrogen gas was generated due to oxidation of the exposed aluminum material. This gas caused a pressure buildup and resultant swelling of the stainless steel cans such that the removal of a fuel assembly, if located at an affected storage location, could not be removed. A discussion of how this potential problem has been considered at Salem is provided below.

The Salem high density spent fuel storage cell utilized Boral material sealed between an inner and outer stainless steel shroud. This cell will be supplied to Exxon Nuclear Company by Brooks and Perkins, Incorporated. The stainless steel shroud (or cladding) is type 304. The boral consists of an 1100 series aluminum and boron carbide matrix core sandwiched between two layers of 1100 series aluminum cladding. The stainless steel shrouds are seal-welded together at both ends such that the annulus between the shrouds is leaktight. In the event that there are leaks allowing water to enter the annulus, there will be corrosion of the aluminum with hydrogen gas as an off product. Once the pressure buildup within the composite exceeds 1.8 to 3 psi, the inner shroud will bulge inward and will contact the fuel bundle. In an effort to avoid the consequences of water leakage into the cell annulus, the licensee will impose strict welding procedures, welding operations and qualifications of welders in accordance with the requirements of the ASME Code, Section IX, and nondestructive examination requirements, in accordance with ASME Section X. In addition, leaktightness tests will be conducted using helium mass spectrometer tests to ensure 100% leaktightenss with a 95% confidence level.

The response of a poison spent fuel storage cell to internal pressurization caused by corrosion has been evaluated by Exxon Nuclear Co. in a series of tests which demonstrated that if a leak exists in a fuel storage cell after installation in the water filled pool and before fuel is inserted, the worst consequence would be the inability to insert the fuel into that cell. Secondly, if a leak develops in a fuel storage cell during the operating lifetime of the storage pool and fuel is already in place, the most severe results would be that the fuel could not be withdrawn with the normal fuel withdrawal force limit of the fuel handling machine. In this event, semi-remote tooling will be used to provide vent holes in the top of the storage cell annulus to relieve the pressure on the fuel assembly and permit routine removal.

Based upon our review to date of the corrosion potential in spent fuel pool environments and previous operating experience, we have concluded that at the pool temperature and the quality of the demineralized water (with dissolved boric acid) there is reasonable assurance that no significant corrosion of the stainless steel in the racks, the fuel cladding or the pool liner will occur over the lifetime of the plant, thereby significantly impacting the structural integrity of the racks. Since the possibility of long-term storage of spent fuel exists, the effects of the pool environment on the racks, fuel cladding and pool liner are under continued investigation.

2.4.2 Evaluation Summary

The analyses, the design, the fabrication and the installation of the proposed fuel rack storage system are in accordance with accepted criteria. The analysis of the structural loads imposed by dynamic, static, seismic and thermal loadings, and the acceptance criteria for the appropriate loading conditions, are in accordance with the appropriate portions of the NRC OT Position for Review and Acceptance of Spent Fuel Pool Storage and Handling Applications, April 1978.

The mechanical properties for the materials utilized in the rack design were those consistent with the pool maximum operating temperature of 150°F. The quality assurance procedures for the materials, the fabrication, the installation and the examination of the new rack structures are in acceptable general conformance with the accepted requirements of ASME Code, Section III, Subsection NF, Articles NF-2000, NF-4000 and NF-5000.

The effects of the additional loads on the existing pool structure due to high density storage racks have been examined. The pool structural integrity is assured by conformance with the original FSAR acceptance criteria. In turn, this provides adequate assurance that the pool will remain leaktight.

There is no evidence at this time to indicate that corrosion of the fuel assemblies, the stainless steel rack structures or the fuel pool liner will occur at the temperatures and quality of the demineralized water (with dissolved boric acid) to be maintained in this pool. The welding techniques and procedures and the nondestructive examination techniques provide a high level of confidence that the annuli containing the Boral in the installed cans will be leaktight. Although no leakage is likely to occur, tests were conducted which demonstrated that if isolated cases of leakage should occur in service, any swelling of the cans would not represent a safety hazard.

Upon exposure of the Boral plates (B_4C/Al matrix) to the spent fuel pool water, galvanic coupling between the aluminum-Boral liner, aluminum binder and the stainless steel shroud could occur. Deterioration of the Boral would be limited to edge attack by general corrosion and pitting corrosion of the aluminum liner and binder in the general area of the leak path. The B_4C neutron adsorption particles are inert to the pool water and would become embedded in corrosion products preventing loss of the B_4C particles. Thus, this small amount of deterioration would have no effect on neutron shielding, attenuation properties or criticality safety. The hydrogen produced by corrosion of the aluminum will be released by venting to minimize bulging.

To aid in verifying the above conclusions, the licensee has committed to conduct a long-term fuel storage surveillance program to verify that the spent fuel storage cell retains the material stability and mechanical integrity over the life of the spent fuel storage racks under actual spent fuel pool service conditions. Sample flat plate sandwich coupons and short fuel storage cell sections will be placed in an empty fuel storage cell and periodically examined visually and by weight analysis.

2.4.3 Conclusion

Based on the evaluation presented above, we find that the new proposed Salem spent fuel storage racks and the design and analyses performed for the racks, support frames and pool are in conformance with established criteria, codes and standards.

2.5 Occupational Radiation Exposure

If the modification is accomplished before the first refueling, there should be no occupational exposure associated with the removal, disassembly and disposal of the low density racks and the installation of the high density racks, because both spent fuel pools would be dry and without spent fuel or water containing radioactivity.

If the modification is not accomplished until after the first refueling, there would be some occupational exposure to radiation. Experience at similar facilities where re-racking has occurred has demonstrated that such exposures can be kept to acceptably low levels. Prior experience indicates this should be from about 2 to 5 man-rems. This would represent a small fraction of the total man-rem burden from occupational exposure at the Salem Station. Based on our review, we conclude the exposures from this operation should be as low as reasonably achievable (ALARA).

We have estimated the increment in onsite occupational dose resulting from the proposed increase in stored fuel assemblies at both units on the basis of information supplied by the licensee, and by using relevant assumptions for occupancy times and for dose rates in the spent fuel area from radionuclide concentrations in the SFP water. The spent fuel assemblies themselves contribute a negligible amount to dose rates in the pool area because of the depth of water shielding the fuel. The occupational radiation exposure resulting from the proposed action represents a negligible burden. Based on present and projected operations in the spent fuel pool area, we estimate that the proposed modification should add less than one percent to the total annual occupational radiation exposure burden at both units. The small increase in radiation exposure should not affect the licensee's ability to maintain individual occupational doses to as low as is reasonably achievable and within the limits of 10 CFR Part 20. Thus, we conclude that storing additional fuel in the two pools will not result in any significant increase in doses received by occupational workers.

2.6 Radioactive Waste Treatment

The station contains waste treatment systems designed to collect and process the gaseous, liquid and solid wastes that might contain radioactive material. The waste treatment systems were evaluated in the Salem 1 and 2 Safety Evaluation (SER) dated October 1974 for the station. There will be no change in the waste treatment systems or in the conclusions of the evaluation of these systems in Section 11.0 of the SER because of the proposed modification.

3.0 SUMMARY

Our evaluation supports the conclusion that the proposed modifications to the Salem Unit 1 SFP are acceptable because:

(1) The increase in occupational radiation exposure to individuals due to the storage of additional fuel in the SFP would be negligible.

(2) The installation and use of the new fuel racks does not alter the potential consequences of the design basis accident for the SFP, i.e., the rupture of a single fuel assembly and the subsequent release of the assembly's radioactive inventory within the gap.

(3) The likelihood of an accident involving heavy loads in the vicinity of the spent fuel pools is sufficiently small that no additional restrictions on load movement are necessary while our generic review of the issues is underway.

(4) The physical design of the new storage racks will preclude criticality for any credible moderating condition with the limits to be stated in the technical specifications.

(5) The SFP has adequate cooling with existing systems.

(6) The structural design and the materials of construction are adequate to assure safe storage of fuel in the pool environment for the duration of plant lifetime and to withstand the seismic loading of the design earthquakes.

4.0 CONCLUSION

We have concluded, based on the considerations discussed above, that: (1) there is reasonable assurance that the health and safety of the public will not be endangered by operation in the proposed manner, and (2) such activities will be conducted in compliance with the Commission's regulations and that the proposed action to permit installation and use of high density spent fuel storage racks in the spent fuel pool at the Salem Nuclear Generating Station, Unit 1 will not be inimical to the common defense and security or to the health and safety of the public.

Date: January 15, 1979