Consumers Power
POWERING MICHIGAN'S PROGRESS
Palisades Nuclear Plant: 27780 Blue Star Memorial Highway, Covert, MI 49043

G B Slade
General Manager

July 23, 1992

Nuclear Regulatory Commission
Document Control Desk
Washington, DC 20555

DOCKET 50-255 - LICENSE DPR-20 - PALISADES PLANT - REPLY TO OPEN ITEM CONTAINED IN ROUTINE UNANNOUNCED RESIDENT INSPECTION REPORT 50-255/92016 (DRP)

Inspection Report 50-255/92016-01(DRP), dated June 23, 1992, requests that a description of our planned corrective actions to resolve Open Item 255/92016-01 (DRP) be provided within 30 days of the date of the inspection report. Attachment 1 provides that description.

Gerald B Slade
General Manager

CC: Administrator, Region III, USNRC
NRC Resident Inspector - Palisades

Attachment

IE01

ATTACHMENT 1

Consumers Power Company
Palisades Plant
Docket 50-255

REPLY TO OPEN ITEM 255/92016-01 (DRP)

July 23, 1992

6 Pages

Open Item 255/92016-01; Palisades Reactor Head/ Pressurizer Vent System

"During the post refueling outage plant heat-up, the indicated pressure on PIA-1066, "Gaseous Vent Pressure Gage," increased as the primary coolant system was pressurized. The pressure increase lagged the primary coolant system pressurization by several minutes. When steady state primary coolant conditions were achieved, the down stream isolation valves were cycled. The line de-pressurized, but was re-pressurized in several minutes.

The vent system is connected to both the reactor vessel head and pressurizer. The line relieves to either the pressurizer quench tank or directly to the containment atmosphere. The system configuration provides for dual isolation from either the head or the pressurizer to the containment atmosphere. PIA-1066 is installed on the common piping between the first and second isolation valves. The increase in pressure at PIA-1066 indicated that the second set of isolation valves were holding pressure. This was confirmed by the stable pressurizer quench tank readings and by stable containment atmospheric temperature and humidity readings.

Inspection Reports 50-255/89012(DRP), 50-255/90015(DRP) and 50-255/91009(DRP) documented that this problem has occurred in the three previous operating cycles. The work order history for this system indicated that system engineering, operations and maintenance groups have made several attempts to resolve the problem. It was unclear if the problem results from misapplication of the valves, the system configuration, maintenance problems, or some combination.

The inspector reviewed the work order history and discussed the problem with engineering, operations and maintenance personnel. The resolution of this problem is considered an open item. Since the resolution of the open item was not clear, the inspector has requested a written response to this open item (Open Item 255/92016-01(DRP))."

CPCo RESPONSE

The isolation valves are Target Rock, one inch, pilot operated solenoid valves. The design basis of the system includes flow limiting orifices, located upstream of the reactor head and pressurizer vent isolation valves, which will limit leakage from either vent source to less than the make-up capacity of a single charging pump. The normal discharge for the vent system is to the quench tank, however redundant discharge capability is available to the containment atmosphere. It should also be noted that the piping configuration is such that opening the downstream valves will not drain the piping. The attached Figure 1 shows the vent system.

History

The following is a summary of past Palisades activities pertaining to the vent system high pressure.

09/86 All six isolation valves were rebuilt. Special Test T-210 "Rx Head/Pressurizer Vent Flush and Leakage Test" was developed and performed as post-maintenance testing for the valve rebuild. All valves tested satisfactory.

08/88 During shutdown for refueling, Technical Specification Surveillance Test RO-112 "Rx Head/Pressurizer Flow Check", was developed and performed per new technical specification requirements. RO-112 is performed with the primary coolant system (PCS) at approximately 200 psi. This test verifies flow through the vent header by stroking the upstream/downstream valves and verifying that pressure increases/decreases via the control room pressure indicator. Since this test vents and pressurizes the piping between the isolation valves it is also utilized as an indication of gross valve leakage. No evidence of gross valve leakage was identified during this testing.

04/89 The vent system pressure indicator alarmed at normal PCS pressure. Alarm Response Procedure ARP-33, "Auxiliary System Scheme EK-02 (C-11A)", was revised to allow stroking the vent system valves to flush and establish proper seating. However, the decision was made not to stroke at that time since the downstream valves were sealed and no loss of PCS inventory was occurring. Additionally, General Operating Procedure GOP-13 "Primary System Leakage Calculation" was revised to require that vent system pressure is recorded every hour when the alarm is actuated. Quench tank volume and containment atmosphere were checked to verify there was no PCS Leakage.

10/89 The plant was shut down for a maintenance outage and the vent system high pressure alarm cleared.

12/89 ARP-33 was revised to direct operators to utilize Off-Normal Operating Procedure ONP-23.1 (PCS Leak) to evaluate and respond to a vent system high pressure alarm rather than stroking valves.

12/89 Start-up from the maintenance outage did not result in the vent system high pressure alarm being actuated.

02/90 The plant was shutdown for a forced outage.

03/90 Start-up from the forced outage did not result in the vent system high pressure alarm being actuated.

04/90 The plant was shutdown for a maintenance outage.

05/90 Start-up from the maintenance outage did not result in the vent system high pressure alarm being received.

06/90 The vent system pressure alarm was actuated at PCS system pressure. Prior to the alarm, it was identified that pressure had increased. Discussion between operations and engineering concluded that the cause was not actual valve leakage. During those discussions and evaluations it was determined that the vent system is water solid after filling and venting the PCS in preparation for plant start-up. This led to questioning whether plant heat-up (increased containment atmosphere temperature) could result in the water trapped between the isolation valves experiencing thermal expansion and causing the increased pressures. Data was collected in June 1990 which showed a strong correlation between containment temperature and vent system pressure. Not only did the data show that temperature and pressure increased together but they also decreased together. The data also showed that after fluctuating with containment temperature for some time, the pressure reached a point where it escalated to system pressure and remained there for the rest of the run. This is believed to have been caused by a spike in containment temperature which caused the vent system pressure to spike. The design of the pilot operated solenoid valve relies on back pressure to provide the majority of the seating force. Therefore, as vent system pressure spiked the pressure drop across the upstream isolation valves was reduced and correspondingly the valve seating force was reduced to the point where the valve leaked, allowing the pressure to equalize with PCS Pressure.

It was also verified that the downstream valves were not leaking to the quench tank or containment atmosphere.

09/90 The plant was shutdown for a refueling outage. With the PCS in cold shutdown and pressurized at approximately 250 psi, operations stroked the downstream isolation valve leading to the quench tank. This was done in an attempt to reseat the upstream valves and determine whether an actual leak existed. No leakage was noted. Additionally, RO-112 was performed during shutdown and again no leakage was noted.

03/91 Start-up from the refueling outage was completed. The vent system pressure gauge alarmed at PCS pressure. No leakage past downstream isolation valves was exhibited.

11/91 A temporary modification was performed to raise the alarm set-point and clear the alarm. Hourly logging of pressure continued and was tracked by the control room operators.

02/92 The plant was shutdown for a refueling outage. Technical Specification Test RO-112 was performed and no significant leakage was indicated.

04/92 Start-up from the refueling outage was completed. The vent system high pressure alarm was actuated at system pressure. Control room operators verified there was no leakage to either the quench tank or the containment atmosphere. In an effort to further determine whether any valve leakage existed, control room operators stroked the downstream quench tank isolation valve to relieve the pressure and then timed the pressure buildup. The results showed that pressure between the downstream and upstream valves returned to system pressure in 18 minutes. This activity confirmed that one or more of the upstream valves were leaking. However, considering that the piping volume between the upstream and downstream valves is approximately 1.7 gallons and that relieving the pressure does not drain the piping (i.e., the piping remains water solid), it was determined that the upstream leakage was very small. Prior to this outage, system engineering and operations had discussed whether this vent line could be drained so that it would not be water solid upon start-up and determined that it was not possible since the lines must be used as the high point vent during fill and vent preparations for start-up.

CONCLUSION

Based on the results of the testing and monitoring performed to date, we have concluded the following:

1) The apparent leakage of the isolation valves upstream from PIA-1066 is not a significant safety issue since the design basis relies on the flow limiting orifices.

2) Since the line is water solid upon start-up, containment temperature has a significant affect on the vent system pressure.

3) The downstream isolation valves are not leaking.

4) Any leakage from the upstream isolation valves due to valve degradation is very small.

Based on these conclusions, the system engineering department will continue monitoring the condition of the isolation valves and will schedule appropriate corrective action if and when the upstream valve leakage becomes significant or the downstream valves show evidence of leakage. It should be noted that testing can only be performed during heat-up and cool-down. In addition, system engineering is evaluating the design basis of the alarm function as well as methods for further testing of the upstream isolation valves to determine which of the four (4) valves are actually leaking.

Since the design basis of the vent system rests on the existence of the flow limiting orifice, the downstream isolation valves are not leaking and upstream valve leakage is minor, the small amount of leakage in the upstream valves and the resultant increase in pressure between the isolation valves is not considered to adversely affect either safe shutdown capability or the safe operation of the plant. Therefore, at this time, no additional corrective action is planned.

RX HEAD/PZR VENT SYSTEM

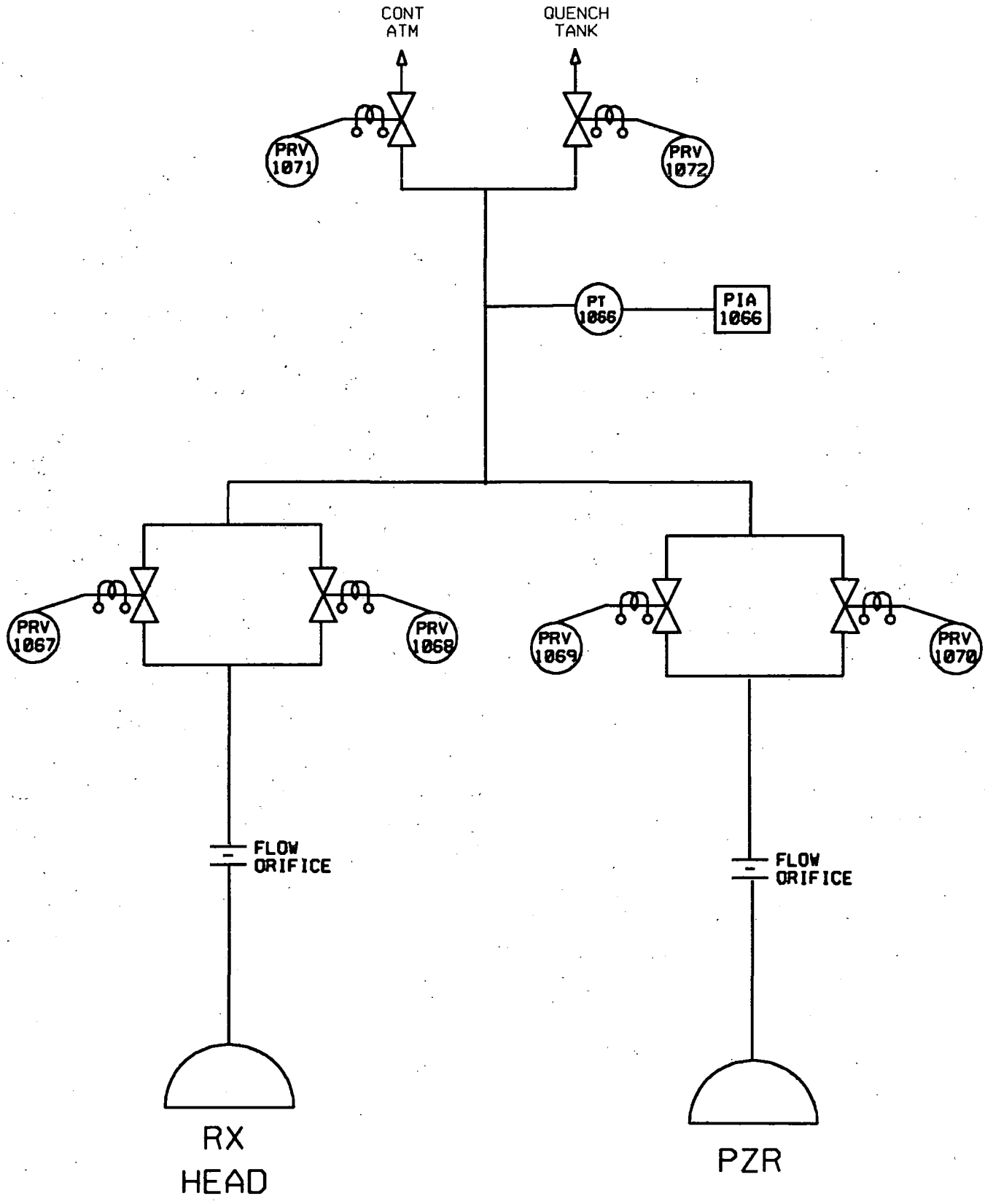

FIGURE 1