UNITED STATES
NUCLEAR REGULATORY COMMISSION
WASHINGTON, D. C. 20555

SAFETY EVALUATION BY THE OFFICE OF NUCLEAR REACTOR REGULATION

PALISADES PLANT

DOCKET NO. 50-255

ENVIRONMENTAL QUALIFICATION OF ELECTRIC EQUIPMENT IMPORTANT TO SAFETY

1.0 INTRODUCTION

Equipment which is used to perform a necessary safety function must be demonstrated to be capable of maintaining functional operability under all service conditions postulated to occur during its installed life for the time it is required to operate. This requirement, which is embodied in General Design Criteria 1 and 4 of Appendix A and Sections III, XI, and XVII of Appendix B to 10 CFR Part 50, is applicable to equipment located inside as well as outside containment. More detailed requirements and guidance relating to the methods and procedures for demonstrating this capability for electrical equipment have been set forth in 10 CFR 50.49, "Environmental Qualification of Electric Equipment Important to Safety for Nuclear Power Plants," NUREG-0588, "Interim Staff Position on Environmental Qualification of Safety-Related Electrical Equipment" (which supplements IEEE Standard 323 and various NRC Regulatory Guides and industry standards), and "Guidelines for Evaluating Environmental Qualification of Class 1E Electrical Equipment in Operating Reactors" (DOR Guidelines).

2.0 BACKGROUND

On February 8, 1979, the NRC Office of Inspection and Enforcement (IE) issued to all licensees of operating plants [except those included in the Systematic Evaluation Program (SEP)] IE Bulletin (IEB) 79-01, "Environmental Qualification of Class 1E Equipment." This Bulletin, together with IE Circular 78-08 (issued on May 31, 1978), required the licensees to perform reviews to assess the adequacy of their environmental qualification programs.

On January 14, 1980, NRC issued IEB 79-01B which included the DOR Guidelines and NUREG-0588 as attachments 4 and 5, respectively. Subsequently, on May 23, 1980, Commission Memorandum and Order CLI-80-21 was issued and stated that the DOR Guidelines and portions of NUREG-0588 form the requirements that licensees must meet regarding environmental qualification of safety-related electrical equipment in order to satisfy those aspects of 10 CFR Part 50, Appendix A, General Design Criterion (GDC) 4. Supplements to IEB 79-01B were issued for further clarification and definition of the staff's needs. These supplements were issued on February 29, September 30, and October 24, 1980.

In addition, the staff issued orders dated August 29, 1980 (amended in September 1980) and October 24, 1980 to all licensees. The August order required that the licensees provide a report, by November 1, 1980, documenting the qualification of safety-related electrical equipment. The October order required the establishment of a central file location for the maintenance of all equipment qualification records. The central file was mandated to be established by December 1, 1980. The staff subsequently issued a Safety Evaluation (SE) on environmental qualification of safety-related electrical equipment to the licensee on June 1, 1981. This SE directed the licensee to "either provide documentation of the missing qualification information which demonstrates that safety-related equipment meets the DOR Guidelines or NUREG-0588 requirements or commit to a corrective action [requalification, replacement (etc.)]." The licensee was required to respond to NRC within 90 days of receipt of the SE. In response to the staff SE issued in 1981, the licensee submitted additional information regarding the qualification of safety-related electrical equipment. This information was evaluated for the staff by the Franklin Research Center (FRC) in order to: (1) identify all cases where the licensee's response did not resolve the significant qualification issues, (2) evaluate the licensee's qualification documentation in accordance with established criteria to determine which equipment had adequate documentation and which did not, and (3) evaluate the licensee's qualification documentation for safety-related electrical equipment located in harsh environments required for TMI Lessons Learned Implementation. A Technical Evaluation Report (TER) was issued by FRC on December 30, 1982. An SE was subsequently issued to the Consumers Power Company on April 25, 1983, with the FRC TER as an attachment.

A final rule on environmental qualification of electric equipment important to safety for nuclear power plants became effective on February 22, 1983. This rule, Section 50.49 of 10 CFR Part 50, specifies the requirements of electrical equipment important to safety located in a harsh environment. In accordance with this rule, equipment for Palisades may be qualified to the criteria specified in either the DOR Guidelines or NUREG-0588, except for replacement equipment. Replacement equipment installed subsequent to February 22, 1983 must be qualified in accordance with the provisions of 10 CFR 50.49, using the guidance of Regulatory Guide 1.89, unless there are sound reasons to the contrary.

A meeting was held with each licensee of plants for which a TER had been prepared for the staff by FRC in order to discuss all remaining open issues regarding environmental qualification, including acceptability of the environmental conditions for equipment qualification purposes, if this issue had not yet been resolved. On January 10, 1984, a meeting was held to discuss Consumers Power's proposed method to resolve the environmental qualification deficiencies identified in the April 25, 1983 SE and December 30, 1982 FRC TER. Discussions also included Consumers Power's general methodology for compliance with 10 CFR 50.49, and justification for continued operation for those equipment items for which environmental

qualification is not yet completed. The minutes of the meeting and proposed method of resolution for each of the environmental qualification deficiencies are documented in February 14 and June 15, 1984 submittals from the licensee.

3.0 EVALUATION

The evaluation of the acceptability of the licensee's electrical equipment environmental qualification program is based on the results of an audit review performed by the staff of: (1) the licensee's proposed resolutions of the environmental qualification deficiencies identified in the April 25, 1983 SE and December 30 1982 FRC TER; (2) compliance with the requirements of 10 CFR 50.49; and (3) justification for continued operation (JCO) for those equipment items for which the environmental qualification is not yet completed.

Proposed Resolutions of Identified Deficiencies

The proposed resolutions for the equipment environmental qualification deficiencies, identified in the April 25, 1983 SE, and the FRC TER enclosed with it, are described in the licensee's February 14 and June 15, 1984 submittals. During the January 10, 1984 meeting with the licensee, the staff discussed the proposed resolution of each deficiency for each equipment item identified in the FRC TER and found the licensee's approach for resolving the identified environmental qualification deficiencies acceptable. The majority of deficiencies identified were documentation, similarity, aging, qualified life and replacement schedule. All open items identified in the SE dated April 25, 1983 were also discussed and the resolution of these items has been found acceptable by the staff.

The approach described by the licensee for addressing and resolving the identified deficiencies includes replacing equipment, performing additional analyses, utilizing additional qualification documentation beyond that reviewed by FRC, obtaining additional qualification documentation and determining that some equipment is outside the scope of 10 CFR 50.49, and therefore not required to be environmentally qualified, e.g., located in a mild environment. The staff discussed the proposed resolutions in detail on an item by item basis with the licensee during the January 10, 1984 meeting. Replacing or exempting equipment, for an acceptable reason, are clearly acceptable methods for resolving environmental qualification deficiencies. The more lengthy discussions with the licensee concerned the use of additional analyses or documentation. Although the staff did not review the additional analyses or documentation, they discussed how analysis was being used to resolve deficiencies identified in the FRC TER, and the content of the additional documentation in order to determine the acceptability of these methods. The licensee's equipment environmental qualification files will be audited by the staff during follow-up inspections to be performed by Region III, with assistance from IE Headquarters and NRR staff as necessary. Since a

significant amount of documentation has already been reviewed by the staff and FRC, the primary objective of the file audit will be to verify that they contain the appropriate analyses and other necessary documentation to support the licensee's conclusion that the equipment is qualified. The inspections will verify that the licensee's program for surveillance and maintenance of environmentally qualified equipment is adequate to assure that this equipment is maintained in the as analyzed or tested condition. The method used for tracking periodic replacement parts, and implementation of the licensee's commitments and actions, e.g., regarding replacement of equipment, will also be verified.

Based on discussions with the licensee and review of its submittal, the staff finds the licensee's approach for resolving the identified environmental qualification deficiencies acceptable.

Compliance With 10 CFR 50.49

In its June 15, 1984 submittal, the licensee has described the approach used to identify equipment within the scope of paragraph (b)(1) of 10 CFR 50.49, equipment relied upon to remain functional during and following design basis events. Consumers Power Company Equipment Qualification submittal dated September 1, 1981 provided a detailed summary of the design basis events that were considered in the selection of safety-related electrical equipment which has to be environmentally qualified. The following design-basis accidents were considered in the equipment selection: loss-of-coolant accident (LOCA) and main steam line break (MSLB) inside containment (reference FSAR Chapter 14 and SEP Topic VI-3 "Containment Pressure and Heat Removal Capability"), MSLB outside containment (reference Special Report No. 6 "Analysis of Postulated High Energy Line Breaks Outside of Containment," June 30, 1975) and flooding outside containment (reference SEP Topic IX-3 "Station Service and Cooling Water System - SE dated February 22, 1982"). The list of safety-related equipment that was generated as defined in paragraph (b)(1) of 10 CFR 50.49 was based on reviews of the Final Safety Analysis Report (FSAR), Technical Specifications, Emergency Operating Procedures, piping and instrumentation diagrams (P&IDs) and other procedures and design documents including the Plant Q-list. The original list has been revised several times to incorporate and delete equipment which resulted from plant modifications for TMI and other reasons.

The licensee's approach for identifying equipment within the scope of paragraph (b)(1) is in accordance with the requirements of that paragraph, and therefore, acceptable.

The method used by the licensee for identification of electrical equipment within the scope of paragraph (b)(2) of 10 CFR 50.49, nonsafety-related electric equipment whose failure under postulated environmental conditions could prevent satisfactory accomplishment of safety functions, is summarized below:

1. The following design-basis accidents were considered in the equipment selection: LOCA and MSLB inside containment, MSLB outside containment and flooding outside containment. The list of safety-related equipment that was generated as defined in paragraph (b)(1) of 10 CFR 50.49 was based on reviews of the FSAR, Technical Specifications, Emergency Operating Procedures, P&IDs and numerous other procedures and design documents including the Plant Q-list. The original list has been revised several times to incorporate and delete equipment which resulted from plant modifications for TMI and other reasons.

2. A review of all wiring diagrams of electrical components environmentally qualified was completed by Consumers Power Company for the Palisades Plant. Five schemes were identified containing a combination of qualified and non-qualified components served off the same fuse. Each of these schemes involves solenoid valve operators and valve position switches. During the recent refueling outage, Consumers Power Company modified each of the identified circuits to provide primary and secondary protection of the qualified circuits from unqualified device failure. This was achieved by separately fusing all unqualified devices. These fuses have been sized to clear any faults prior to losing the common supply fuse or breaker.

3. The operation of all support systems and equipment either directly or indirectly connected were reviewed and the equipment was included on the qualification list as appropriate. This included room ventilation; component cooling, etc.

4. All safety-related qualified equipment is electrically isolated via properly coordinated protective relays, circuit breakers, and/or fuses in accordance with applicable industry standards and NRC regulations.

The staff finds the methodology being used by the licensee is acceptable since it provides reasonable assurance that equipment within the scope of paragraph (b)(2) of 10 CFR 50.49 has been identified.

With regard to paragraph (b)(3) of 10 CFR 50.49, the licensee states that upon issuance of Regulatory Guide 1.97, "Instrumentation...to Assess Plant and Environs Conditions During and Following an Accident," Consumers Power Company performed a variable-by-variable comparison of the specific requirements of this Guide. An evaluation was then conducted to determine which instrumentation and sampling equipment required environmental qualification. Two lists were generated of equipment types A, B, C variables, category 1 and 2, and type D, E variables, category 1 and 2.

The staff has not yet completed its review for conformance to Regulatory Guide 1.97. The staff will determine the acceptability of the licensee's evaluation as part of its review for conformance with Regulatory Guide 1.97. This further staff review for Regulatory Guide 1.97 conformance may result in the licensee being required to include additional equipment in its environmental qualification program.

The staff finds the licensee's approach to identifying equipment within the scope of paragraph (b)(3) of 10 CFR 50.49 acceptable since it is in accordance with the requirements of that paragraph.

Justification for Continued Operation

The licensee has provided, in its June 15, 1984 submittal as supplemented by letter dated January 15, 1985, justification for continued operation addressing each item of equipment for which the environmental qualification is not yet completed (see enclosure for the JCO equipment list).

The staff has reviewed each JCO provided by the licensee in its June 15, 1984 and January 15, 1985 submittals and finds them acceptable since they are based on essentially the same criteria that were used by the staff and its contractor to review JCO's previously submitted by licensees. These criteria, listed below, are also essentially the same as those contained in 10 CFR 50.49(i).

a. The safety function can be accomplished by some other designated equipment that is qualified, and failure of the principal equipment as a result of the harsh environment will not degrade other safety functions or mislead the operator.

b. Partial test data that does not demonstrate full qualification, but provides a basis for concluding the equipment will perform its function. If it cannot be concluded from the available data that the equipment will not fail after completion of its safety function, then that failure must not result in significant degradation of any safety function or provide misleading information to the operator.

c. Limited use of administrative controls over equipment that has not been demonstrated to be fully qualified. For any equipment assumed to fail as a result of the accident environment, that failure must not result in significant degradation of any safety function or provide misleading information to the operator.

4.0 CONCLUSIONS

Based on the above evaluation, the staff concludes the following with regard to the qualification of electric equipment important to safety within the scope of 10 CFR 50.49.

- Consumers Power's electrical equipment environmental qualification program complies with the requirements of 10 CFR 50.49.

- The proposed resolutions for each of the environmental qualification deficiencies identified in the April 25, 1983 SE and FRC TER are acceptable.

- Continued operation until completion of the licensee's environmental qualification program will not present undue risk to the public health and safety.

Justification for Continued Operation Equipment List

Palisades Equipment ID	NRC TER No.	Description
LT-0751A, B, C, D LT-0752A, B, C, D	57	Foxboro Level Transmitters
LT-0103	142	Foxboro Level Transmitters
LT-0701, 0702, 0703, 0704	58	Fischer and Porter Level Transmitters
POS-3018, 3036, 3037, 3059, 3027B, 3056B	49, 50	Honeywell Limit Switches
POS-2117, 2113, 2115, 0861, 0862, 0864, 0865, 0867, 0869, 0870, 0873	42, 44	Honeywell Limit Switches
FT-0306	60	Fischer and Porter Pressure Transmitter
PT-0751A, B, C, D 0752A, B, C, D	63, 143	Foxboro Pressure Transmitters
RE-1805, 1806, 1807, 1808	70	Victoreen Radiation Monitors
TE-0122CA, CB, CC, CD, HA, HB, HC, HD TE-0111A, B, H TE 0121A, B, H	69	Rosemount RTD's
TS-1849, 1850, 1851, 1852, 1856, 1857, 1858, 1859	68	Johnson Controls Temperature Switches

UNITED STATES
NUCLEAR REGULATORY COMMISSION
WASHINGTON, D. C. 20555

SAFETY EVALUATION BY THE OFFICE OF NUCLEAR REACTOR REGULATION

PALISADES PLANT

DOCKET NO. 50-255

ENVIRONMENTAL QUALIFICATION OF ELECTRIC EQUIPMENT IMPORTANT TO SAFETY

1.0 INTRODUCTION

Equipment which is used to perform a necessary safety function must be demonstrated to be capable of maintaining functional operability under all service conditions postulated to occur during its installed life for the time it is required to operate. This requirement, which is embodied in General Design Criteria 1 and 4 of Appendix A and Sections III, XI, and XVII of Appendix B to 10 CFR Part 50, is applicable to equipment located inside as well as outside containment. More detailed requirements and guidance relating to the methods and procedures for demonstrating this capability for electrical equipment have been set forth in 10 CFR 50.49, "Environmental Qualification of Electric Equipment Important to Safety for Nuclear Power Plants," NUREG-0588, "Interim Staff Position on Environmental Qualification of Safety-Related Electrical Equipment" (which supplements IEEE Standard 323 and various NRC Regulatory Guides and industry standards), and "Guidelines for Evaluating Environmental Qualification of Class 1E Electrical Equipment in Operating Reactors" (DOR Guidelines).

2.0 BACKGROUND

On February 8, 1979, the NRC Office of Inspection and Enforcement (IE) issued to all licensees of operating plants [except those included in the Systematic Evaluation Program (SEP)] IE Bulletin (IEB) 79-01, "Environmental Qualification of Class 1E Equipment." This Bulletin, together with IE Circular 78-08 (issued on May 31, 1978), required the licensees to perform reviews to assess the adequacy of their environmental qualification programs.

On January 14, 1980, NRC issued IEB 79-01B which included the DOR Guidelines and NUREG-0588 as attachments 4 and 5, respectively. Subsequently, on May 23, 1980, Commission Memorandum and Order CLI-80-21 was issued and stated that the DOR Guidelines and portions of NUREG-0588 form the requirements that licensees must meet regarding environmental qualification of safety-related electrical equipment in order to satisfy those aspects of 10 CFR Part 50, Appendix A, General Design Criterion (GDC) 4. Supplements to IEB 79-01B were issued for further clarification and definition of the staff's needs. These supplements were issued on February 29, September 30, and October 24, 1980.

In addition, the staff issued orders dated August 29, 1980 (amended in September 1980) and October 24, 1980 to all licensees. The August order required that the licensees provide a report, by November 1, 1980, documenting the qualification of safety-related electrical equipment. The October order required the establishment of a central file location for the maintenance of all equipment qualification records. The central file was mandated to be established by December 1, 1980. The staff subsequently issued a Safety Evaluation (SE) on environmental qualification of safety-related electrical equipment to the licensee on June 1, 1981. This SE directed the licensee to "either provide documentation of the missing qualification information which demonstrates that safety-related equipment meets the DOR Guidelines or NUREG-0588 requirements or commit to a corrective action [requalification, replacement (etc.)]." The licensee was required to respond to NRC within 90 days of receipt of the SE. In response to the staff SE issued in 1981, the licensee submitted additional information regarding the qualification of safety-related electrical equipment. This information was evaluated for the staff by the Franklin Research Center (FRC) in order to: (1) identify all cases where the licensee's response did not resolve the significant qualification issues, (2) evaluate the licensee's qualification documentation in accordance with established criteria to determine which equipment had adequate documentation and which did not, and (3) evaluate the licensee's qualification documentation for safety-related electrical equipment located in harsh environments required for TMI Lessons Learned Implementation. A Technical Evaluation Report (TER) was issued by FRC on December 30, 1982. An SE was subsequently issued to the Consumers Power Company on April 25, 1983, with the FRC TER as an attachment.

A final rule on environmental qualification of electric equipment important to safety for nuclear power plants became effective on February 22, 1983. This rule, Section 50.49 of 10 CFR Part 50, specifies the requirements of electrical equipment important to safety located in a harsh environment. In accordance with this rule, equipment for Palisades may be qualified to the criteria specified in either the DOR Guidelines or NUREG-0588, except for replacement equipment. Replacement equipment installed subsequent to February 22, 1983 must be qualified in accordance with the provisions of 10 CFR 50.49, using the guidance of Regulatory Guide 1.89, unless there are sound reasons to the contrary.

A meeting was held with each licensee of plants for which a TER had been prepared for the staff by FRC in order to discuss all remaining open issues regarding environmental qualification, including acceptability of the environmental conditions for equipment qualification purposes, if this issue had not yet been resolved. On January 10, 1984, a meeting was held to discuss Consumers Power's proposed method to resolve the environmental qualification deficiencies identified in the April 25, 1983 SE and December 30, 1982 FRC TER. Discussions also included Consumers Power's general methodology for compliance with 10 CFR 50.49, and justification for continued operation for those equipment items for which environmental

qualification is not yet completed. The minutes of the meeting and proposed method of resolution for each of the environmental qualification deficiencies are documented in February 14 and June 15, 1984 submittals from the licensee.

3.0 EVALUATION

The evaluation of the acceptability of the licensee's electrical equipment environmental qualification program is based on the results of an audit review performed by the staff of: (1) the licensee's proposed resolutions of the environmental qualification deficiencies identified in the April 25, 1983 SE and December 30 1982 FRC TER; (2) compliance with the requirements of 10 CFR 50.49; and (3) justification for continued operation (JCO) for those equipment items for which the environmental qualification is not yet completed.

Proposed Resolutions of Identified Deficiencies

The proposed resolutions for the equipment environmental qualification deficiencies, identified in the April 25, 1983 SE, and the FRC TER enclosed with it, are described in the licensee's February 14 and June 15, 1984 submittals. During the January 10, 1984 meeting with the licensee, the staff discussed the proposed resolution of each deficiency for each equipment item identified in the FRC TER and found the licensee's approach for resolving the identified environmental qualification deficiencies acceptable. The majority of deficiencies identified were documentation, similarity, aging, qualified life and replacement schedule. All open items identified in the SE dated April 25, 1983 were also discussed and the resolution of these items has been found acceptable by the staff.

The approach described by the licensee for addressing and resolving the identified deficiencies includes replacing equipment, performing additional analyses, utilizing additional qualification documentation beyond that reviewed by FRC, obtaining additional qualification documentation and determining that some equipment is outside the scope of 10 CFR 50.49, and therefore not required to be environmentally qualified, e.g., located in a mild environment. The staff discussed the proposed resolutions in detail on an item by item basis with the licensee during the January 10, 1984 meeting. Replacing or exempting equipment, for an acceptable reason, are clearly acceptable methods for resolving environmental qualification deficiencies. The more lengthy discussions with the licensee concerned the use of additional analyses or documentation. Although the staff did not review the additional analyses or documentation, they discussed how analysis was being used to resolve deficiencies identified in the FRC TER, and the content of the additional documentation in order to determine the acceptability of these methods. The licensee's equipment environmental qualification files will be audited by the staff during follow-up inspections to be performed by Region III, with assistance from IE Headquarters and NRR staff as necessary. Since a

significant amount of documentation has already been reviewed by the staff and FRC, the primary objective of the file audit will be to verify that they contain the appropriate analyses and other necessary documentation to support the licensee's conclusion that the equipment is qualified. The inspections will verify that the licensee's program for surveillance and maintenance of environmentally qualified equipment is adequate to assure that this equipment is maintained in the as analyzed or tested condition. The method used for tracking periodic replacement parts, and implementation of the licensee's commitments and actions, e.g., regarding replacement of equipment, will also be verified.

Based on discussions with the licensee and review of its submittal, the staff finds the licensee's approach for resolving the identified environmental qualification deficiencies acceptable.

Compliance With 10 CFR 50.49

In its June 15, 1984 submittal, the licensee has described the approach used to identify equipment within the scope of paragraph (b)(1) of 10 CFR 50.49, equipment relied upon to remain functional during and following design basis events. Consumers Power Company Equipment Qualification submittal dated September 1, 1981 provided a detailed summary of the design basis events that were considered in the selection of safety-related electrical equipment which has to be environmentally qualified. The following design-basis accidents were considered in the equipment selection: loss-of-coolant accident (LOCA) and main steam line break (MSLB) inside containment (reference FSAR Chapter 14 and SEP Topic VI-3 "Containment Pressure and Heat Removal Capability"), MSLB outside containment (reference Special Report No. 6 "Analysis of Postulated High Energy Line Breaks Outside of Containment," June 30, 1975) and flooding outside containment (reference SEP Topic IX-3 "Station Service and Cooling Water System - SE dated February 22, 1982"). The list of safety-related equipment that was generated as defined in paragraph (b)(1) of 10 CFR 50.49 was based on reviews of the Final Safety Analysis Report (FSAR), Technical Specifications, Emergency Operating Procedures, piping and instrumentation diagrams (P&IDs) and other procedures and design documents including the Plant Q-list. The original list has been revised several times to incorporate and delete equipment which resulted from plant modifications for TMI and other reasons.

The licensee's approach for identifying equipment within the scope of paragraph (b)(1) is in accordance with the requirements of that paragraph, and therefore, acceptable.

The method used by the licensee for identification of electrical equipment within the scope of paragraph (b)(2) of 10 CFR 50.49, nonsafety-related electric equipment whose failure under postulated environmental conditions could prevent satisfactory accomplishment of safety functions, is summarized below:

1. The following design-basis accidents were considered in the equipment selection: LOCA and MSLB inside containment, MSLB outside containment and flooding outside containment. The list of safety-related equipment that was generated as defined in paragraph (b)(1) of 10 CFR 50.49 was based on reviews of the FSAR, Technical Specifications, Emergency Operating Procedures, P&IDs and numerous other procedures and design documents including the Plant Q-list. The original list has been revised several times to incorporate and delete equipment which resulted from plant modifications for TMI and other reasons.

2. A review of all wiring diagrams of electrical components environmentally qualified was completed by Consumers Power Company for the Palisades Plant. Five schemes were identified containing a combination of qualified and non-qualified components served off the same fuse. Each of these schemes involves solenoid valve operators and valve position switches. During the recent refueling outage, Consumers Power Company modified each of the identified circuits to provide primary and secondary protection of the qualified circuits from unqualified device failure. This was achieved by separately fusing all unqualified devices. These fuses have been sized to clear any faults prior to losing the common supply fuse or breaker.

3. The operation of all support systems and equipment either directly or indirectly connected were reviewed and the equipment was included on the qualification list as appropriate. This included room ventilation; component cooling, etc.

4. All safety-related qualified equipment is electrically isolated via properly coordinated protective relays, circuit breakers, and/or fuses in accordance with applicable industry standards and NRC regulations.

The staff finds the methodology being used by the licensee is acceptable since it provides reasonable assurance that equipment within the scope of paragraph (b)(2) of 10 CFR 50.49 has been identified.

With regard to paragraph (b)(3) of 10 CFR 50.49, the licensee states that upon issuance of Regulatory Guide 1.97, "Instrumentation...to Assess Plant and Environs Conditions During and Following an Accident," Consumers Power Company performed a variable-by-variable comparison of the specific requirements of this Guide. An evaluation was then conducted to determine which instrumentation and sampling equipment required environmental qualification. Two lists were generated of equipment types A, B, C variables, category 1 and 2, and type D, E variables, category 1 and 2.

The staff has not yet completed its review for conformance to Regulatory Guide 1.97. The staff will determine the acceptability of the licensee's evaluation as part of its review for conformance with Regulatory Guide 1.97. This further staff review for Regulatory Guide 1.97 conformance may result in the licensee being required to include additional equipment in its environmental qualification program.

The staff finds the licensee's approach to identifying equipment within the scope of paragraph (b)(3) of 10 CFR 50.49 acceptable since it is in accordance with the requirements of that paragraph.

Justification for Continued Operation

The licensee has provided, in its June 15, 1984 submittal as supplemented by letter dated January 15, 1985, justification for continued operation addressing each item of equipment for which the environmental qualification is not yet completed (see enclosure for the JCO equipment list).

The staff has reviewed each JCO provided by the licensee in its June 15, 1984 and January 15, 1985 submittals and finds them acceptable since they are based on essentially the same criteria that were used by the staff and its contractor to review JCO's previously submitted by licensees. These criteria, listed below, are also essentially the same as those contained in 10 CFR 50.49(i).

a. The safety function can be accomplished by some other designated equipment that is qualified, and failure of the principal equipment as a result of the harsh environment will not degrade other safety functions or mislead the operator.

b. Partial test data that does not demonstrate full qualification, but provides a basis for concluding the equipment will perform its function. If it cannot be concluded from the available data that the equipment will not fail after completion of its safety function, then that failure must not result in significant degradation of any safety function or provide misleading information to the operator.

c. Limited use of administrative controls over equipment that has not been demonstrated to be fully qualified. For any equipment assumed to fail as a result of the accident environment, that failure must not result in significant degradation of any safety function or provide misleading information to the operator.

4.0 CONCLUSIONS

Based on the above evaluation, the staff concludes the following with regard to the qualification of electric equipment important to safety within the scope of 10 CFR 50.49.

- Consumers Power's electrical equipment environmental qualification program complies with the requirements of 10 CFR 50.49.

- The proposed resolutions for each of the environmental qualification deficiencies identified in the April 25, 1983 SE and FRC TER are acceptable.

- Continued operation until completion of the licensee's environmental qualification program will not present undue risk to the public health and safety.

Justification for Continued Operation Equipment List

Palisades Equipment ID	NRC TER No.	Description
LT-0751A, B, C, D LT-0752A, B, C, D	57	Foxboro Level Transmitters
LT-0103	142	Foxboro Level Transmitters
LT-0701, 0702, 0703, 0704	58	Fischer and Porter Level Transmitters
POS-3018, 3036, 3037, 3059, 3027B, 3056B	49, 50	Honeywell Limit Switches
POS-2117, 2113, 2115, 0861, 0862, 0864, 0865, 0867, 0869, 0870, 0873	42, 44	Honeywell Limit Switches
FT-0306	60	Fischer and Porter Pressure Transmitter
PT-0751A, B, C, D 0752A, B, C, D	63, 143	Foxboro Pressure Transmitters
RE-1805, 1806, 1807, 1808	70	Victoreen Radiation Monitors
TE-0122CA, CB, CC, CD, HA, HB, HC, HD TE-0111A, B, H TE 0121A, B, H	69	Rosemount RTD's
TS-1849, 1850, 1851, 1852, 1856, 1857, 1858, 1859	68	Johnson Controls Temperature Switches

CP CO
ERC

START OF DOCUMENT

FILE NO. E4S SH 6A

Automatic Switch Co.

E48A 001

ASCO®

Solenoid Valves
Air Operated Valves
Air Control Components
Pressure Switches
Temperature Switches
Emergency Power Control Systems

Automatic Switch Co. FLORHAM PARK, NEW JERSEY 07932

COPY NO 60

ATTACHMENT 4

EVALUATION OF THE DOSE RATE AND SHIELDING REQUIREMENTS FOR THE POST ACCIDENT SAMPLE SYSTEM

Prepared by

Sentry Equipment Corp.

David M. Gaston

June, 1982

Rev. 1 — July 1982

Rev. 2 — Sept. 1982

TABLE OF CONTENTS

1.0 INTRODUCTION

Sentry Equipment Corp. (SEC) has evaluated the shielding design for the Post Accident Sample System (PASS) equipment being provided by SEC for use in nuclear power stations. The PASS equipment consists of the following:

Grab Sample Panel (GSP)
Containment Air Sample Panel (CASP)

This equipment is designed to enable an operator to obtain samples of primary reactor coolant or containment atmosphere, which may be highly radioactive in the event of a reactor accident involving substantial fuel failure.

The results of the shielding analyses certifies that the maximum integrated dose to an operator performing any sampling operation using the GSP or CASP is approximately 400 mrem.

2.0 SHIELDING EVALUATION METHODS

2.1 Introduction

The dose rates due to direct radiation emitted from the process piping behind the GSP and CASP were determined by the SEC radiation shielding design system computer codes. The methods used are discussed in section 2.2 and are based on the equations given in volume 1, section 6.2 of the Engineering Compendium on Radiation Shielding (Springer-Verlag New York Inc., 1968).

The dose rate contributions to the front of the GSP and CASP due to backscatter from the walls and floor behind the panels is not considered. There are no "thin" sections or ducts in the shielding that would make scattered radiation of more concern than direct radiation.

The dose rate contributions due to various shield penetrations are discussed in section 2.3

2.2 Discussion of Methods

The dose rates were calculated using the equations for shielded line sources. Modeling was simplified by not considering shielding contributions of the piping walls or self absorption in the process fluid. Obviously, this will result in a more conservative dose rate than if they had been considered.

The equations used for the geometries shown in Figure 2-1 are:

At P_1: D.R. (mrad/hr) = $$\frac{B\ S_v\ A_x}{4\pi\ z\ C}\left[F(\Theta_1,X)+F(\Theta_2,X)\right]$$

At P_2 & P_3: D.R. (mrad/hr) = $$\frac{B\ S_v\ A_x}{4\pi\ z\ C}\left[F(\Theta_2,X)-F(\Theta_1,X)\right]$$

where:

B = scattered buildup factor as discussed in section 2.2.1.

S_V = volumetric source strength (photons/sec/cm^3) as discussed in section 3.2.1

A_X = cross-sectional area of source material

$$F(\Theta,x) = \int_0^{\Theta} \exp\left[-x \sec \Theta'\right] d\Theta' \qquad \text{R2}$$

$$X = \sum_{i=1}^{n} \mu_i t_i$$

C = flux to dose conversion $\dfrac{\text{photons/cm}^2\text{/sec}}{\text{mrad/hr}}$

t_i = shield laminate thickness (cm)

μ_i = linear attenuation coefficient of shield laminate (cm^{-1}) (Table 2-1)

2.2.1 Scattered Dose Buildup Factors

The scattered buildup factor for multiple shields was determined by Broder's method discussed in chapter 3 of Weapons Radiation Shielding Handbook (DNA-1893-3, Rev. 1; March 1972). This method is based on a buildup factor being calculated at each shield interface; once for each laminate material as if the entire shield consists of that material. These buildup factors are then combined by Broder's recurrence equation:

$$B\left(\sum_{i=1}^{N} \mu_i t_i\right) = B\left(\sum_{i=1}^{N-1} \mu_i t_i\right) + B_N\left(\sum_{i=1}^{N} \mu_i t_i\right) - B_N\left(\sum_{i=1}^{N-1} \mu_i T_i\right)$$

where B ( ) indicates a function not a product.

Thus, the formula for total buildup is:

$$B\left(\sum_{i=1}^{N} \mu_i t_i\right) = \sum_{n=1}^{N} B_n\left(\sum_{i=1}^{n} \mu_n t_i\right) - \sum_{n=2}^{N} B_n\left(\sum_{i=1}^{n-1} \mu_n t_i\right)$$

Each individual buildup factor was calculated using Capo's point source polynomial approximation:

$$B = \sum_{i=0}^{3} \beta_i \, (ut)^i$$ (after Engineering Compendium on Radiation Shielding, Vol. 1)

where β_i are the coefficients listed in Table 2-2

2.2.2 Gamma Source Definition

The source terms were divided into nine groups as follows:

Representative Energy (MeV)	Energy Range (MeV)
0.4	0.1 - 0.5
0.8	0.5 - 0.9
1.3	0.9 - 1.35
1.7	1.35 - 1.8
2.2	1.8 - 2.2
2.5	2.2 - 2.6
2.8	2.6 - 3.0
4.0	3.0 - 5.0
6.1	6.1

2.2.3 Flux to Dose Conversion

The gamma flux calculated at the dose point is quantified in units of photons/sec/cm^2. These are converted to dose rates in mrad/hr for each energy group as follows:

Energy Group (MeV)	Conversion Factor (photons-hr/sec/cm^2/mrad)
0.4	1357
0.8	696.9
1.3	467.2
1.7	380.6
2.2	320.4
2.5	297.7
2.8	275.8
4.0	210.4
6.1	157.0

(after Nuclear Engineering Handbook, Section 7; McGraw-Hill)

2.3 Shield Penetration

All penetrations passing through the shield are offset to minimize the dose due to radiation streaming and have negligible contribution to the dose rate. However, the shielding evaluation for Sentry Equipment Corp. High Radiation Sample System considered the valve stem penetrations (which are identical to those used on the PASS) to have no offset. Therefore, the evaluation of the valve stem penetrations will be included, realizing this will provide a conservative analysis.

Table 2-1: Linear Attenuation Coefficients

Energy (MeV)	Lead (cm^{-1})	Iron (cm^{-1})
0.4	2.4948	0.7165
0.8	0.9707	0.5174
1.3	0.6430	0.4139
1.7	0.5477	0.3571
2.2	0.5012	0.3182
2.5	0.4888	0.3026
2.8	0.4785	0.2894
4.0	0.4695	0.2575
6.1	0.4933	0.2373

(after Nuclear Engineering Handbook, Section 7; McGraw-Hill)

Table 2-2: Coefficients Used in Capo's Form of the Buildup Factor

LEAD

Energy (MeV)	B0	B1	B2	B3
0.4	0.99993E+00	0.24413E+00	-0.17836E-01	0.59319E-03
0.8	0.10118E+00	0.30992E+00	-0.14248E-01	0.48683E-03
1.3	0.10179E+01	0.36963E+00	-0.78522E-02	0.26797E-03
1.7	0.10152E+01	0.38419E+00	-0.28531E-02	0.11143E-03
2.2	0.10076E+01	0.37505E+00	0.26969E-02	-0.30058E-05
2.5	0.10026E+01	0.36026E+00	0.54705E-02	-0.11432E-04
2.8	0.99805E+00	0.34141E+00	0.77384E-02	0.31761E-04
4.0	0.99061E+00	0.25870E+00	0.11135E-01	0.71922E-03
6.1	0.10044E+01	0.19172E+00	-0.14075E-02	0.29838E-02

IRON

Energy (MeV)	B0	B1	B2	B3
0.4	0.10025E+01	0.86091E+00	0.97034E-01	-0.15664E-03
0.8	0.96274E+00	0.86173E+00	0.10918E-00	-0.15172E-02
1.3	0.10160E+01	0.73677E+00	0.57451E-01	-0.48387E-03
1.7	0.10141E+01	0.63660E+00	0.42602E-01	-0.45168E-03
2.2	0.10074E+01	0.62416E+00	0.33554E-01	-0.45419E-03
2.5	0.10043E+01	0.58796E+00	0.30177E-01	-0.43507E-03
2.8	0.10019E+01	0.55378E+00	0.27590E-01	-0.40323E-03
4.0	0.99786E+00	0.44092E+00	0.21099E-01	-0.22404E-03
6.1	0.99809E+00	0.31496E+00	0.15465E-01	0.69837E-04

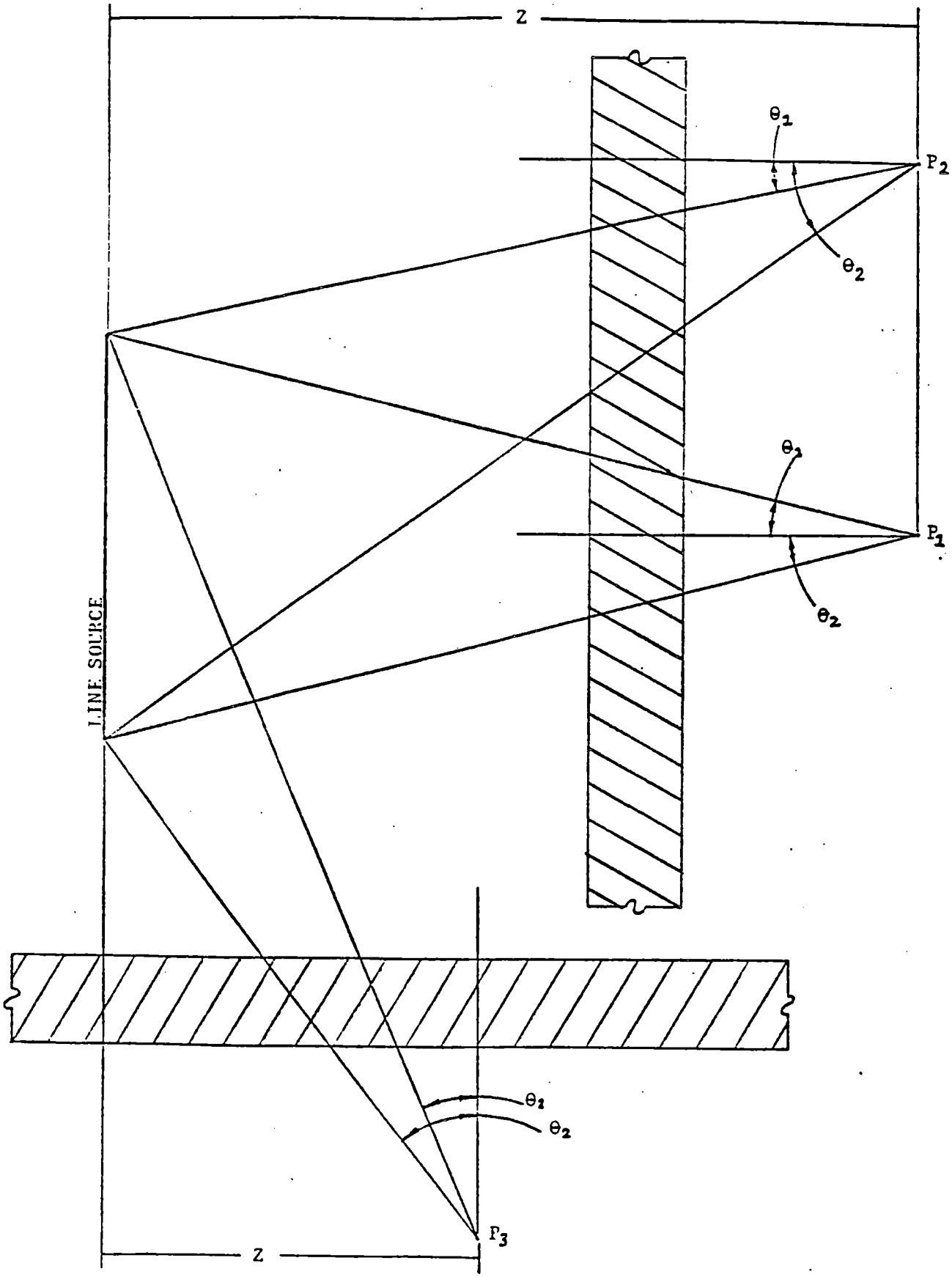
Z
θ_1
P_2
θ_2
θ_1
P_1
θ_2
LINE SOURCE
θ_1
θ_2
P_3
Z

FIGURE 2-1

3.0 SHIELDING EVALUATION RESULTS

3.1 Design Criteria

The shielding provided on the Grab Sample Panel (GSP) and the Containment Air Sample Panel (CASP) is designed to limit the integrated dose to an operator standing one (1) meter in front of the panel to 3 rem whole body and 18.75 rem extremities from a single exercise. | R2

3.2 GSP Shielding Evaluation

3.2.1 Source Terms

The radiation source terms used in the GSP shielding evaluation are based on:

* an equilibrium core operating at a power level of 2561 MW_t
* release of 100% of the noble gas, 50% of the halogen, and 1% of the solid radionuclides to the reactor coolant
* reactor coolant volume of 9500 cubic feet

These source terms are listed in Table 3-1.

3.2.2

The shielding evaluation is based on the "worst case" accident defined by the source terms above. The types of samples which can be obtained during accident conditions are:

* 30 ml in-line pressurized reactor coolant sample from which the gases are stripped
* 3 ml sample of undiluted, gas-stripped reactor coolant
* 1000:1 diluted, gas-stripped reactor coolant sample
* 15,000:1 diluted, stripped gases

A purge of all lines connecting the GSP to the reactor coolant system precedes the acquisition of each sample. After the purge is complete, the 30 ml in-line pressurized reactor coolant sample is isolated. At this time, any lines in the panel containing reactor coolant would be flushed with demineralized water to reduce the total active volume. Then the in-line sample is stripped, separating the gases from the liquid. Now, any or all of the remaining samples may be taken. Upon completion of the sample acquisition, the entire panel

is flushed with demineralized water to remove the remaining active liquids and gases.

The process piping and component data used for this evaluation is:

* all lines in the panel are either 1/4 inch diameter by 0.166 inch bore tube or 1/8 inch diameter by 0.067 inch bore tube.
* the volume of all 1/4 inch tube rising stem valves is 1 ml
* the volume of the thermocouple is the same as an equal length of 1/8 inch tube
* the volume of the VREL is the same as an equal length of 1/4 inch tube
* the flow element is 3/8 inch diameter by 0.315 inch bore tube
* all ball valves have the same bore as their connecting tubing
* the volume of all 1/8 inch tube rising stem valves is 0.1 ml
* the volume of SF1 is 30 ml
* the volume of EV1 and EV2 is 300 ml (150 ml each)

The total source volumes are listed in Table 3-2.

Specific details on GSP operation are given in the Operation and Maintenance Manual.

3.2.3 GSP Shielding

The GSP shielding design consists of a main panel shield and a shield surrounding the opening for the undiluted sample cask. The main panel shield is comprised of 7 inches of lead shot held between two 1/2 inch steel plates and runs from the floor to the top of the panel. The shield surrounding the opening for the undiluted sample cask is comprised of 4 inches of solid lead between two 1/2 inch steel plates. This shield is connected to the opening in the main panel shield and covers the interior side wall, rear wall, and ceiling of the opening. Refer to Figure 3-1 for an illustration of the shielding.

The lead shot density used in the analysis was 7.14 g/cm^3. This value corresponds to 63% of the theoretical lead density of 11.34 g/cm^3 and is based on mechanical and radiometric measurements made by Sentry Equipment Corp.

The maximum whole body and extremity dose rates are considered to be one and the same since use of the reach rod requires that the hands be close to the body. These dose rates are listed in Table 3-3. The line source geometries are shown in Figures 3-2 through 3-4. The dose point considered was directly in front of SF1 at a distance of one (1) meter from the front of the panel. No other points were considered as SF1 will always contain the greatest concentrated active volume during sampling.

3.2.4 Valve Stem Penetrations

The valve stem penetrations used on the PASS are identical to those used on the HRSS. Therefore, the results from the HRSS study were used in this study. It should be understood that the radiation streaming from one penetration is so highly collimated that it will not be additive to the exposure from any other penetration. Therefore, the dose rate of 10 mrem/hr was used for valve stem penetrations based on "Evaluation of the Dose Rate and Shielding Requirements for the HRSS Equipment", NUS 3872; October 1981.

3.2.5 GSP Integrated Dose Results

The integrated dose results are compiled in Table 3-4. These results are well below the requirements of 3 rem whole body and 18.75 rem extremities specified by the integrated dose criteria. R2

3.3 CASP Shielding Evaluation

3.3.1 Source Terms

The radiation source terms used in the CASP shielding evaluation are based on:

* an equilibrium core operating at a power level of 2561 MW_t R1
* release of 100% of the noble gas and 25% halogen radionuclides to the containment atmosphere
* containment free volume of 158,562 cubic feet

These source terms are listed in Table 3-1.

3.3.2 The shielding evaluation is based on the "worst case" accident defined by the source terms above. The type of sample obtained during accident conditions is:

* 624:1 sample of the containment atmosphere (the volume of the sample before dilution is 24 μl).

A purge of the sample lines in the CASP and its interconnecting lines to the containment precedes the acquisition of the sample. After the purge is complete, the sample is trapped in the diluter valve and swept into the sample vial. Upon completion of the sample acquisition, the entire panel is flushed with nitrogen to remove the remaining active gas. R1

The process piping and component data used for this evaluation is:

* all lines in the panel are either 1/4 inch diameter by 0.166 inch bore tube or 1/8 inch diameter by 0.067 inch bore tube.
* the eductor exhaust line has a 0.166 inch bore containing radioactive gas the remainder of the bore is nonradioactive nitrogen.
* the flow element is 1/4 inch diameter by 0.166 inch bore tube.
* all ball and plug valves have the same bore as their interconnecting tubing.

The total source volume is listed in Table 3-2. Specific details on CASP operation are given in the Operation and Maintenance Manual.

3.3.3 CASP Shielding

The CASP shielding design consists of a front panel shield and two side panel shields. The front panel shield is comprised of seven inches of lead shot held between two 1/2 inch steel plates and runs from the floor to the top of the panel. The side shields are five inches of lead shot held between 2 1/2 inch steel plates and run from the floor to the top of the panel.

Refer to Figure 3-5 for an illustration of the shielding.

The lead shot used in the analysis was 7.14 g/cm^3. This value

corresponds to 63% of the theoretical lead density of 11/34 g/cm^3. The maximum whole body and extremity dose rates are considered to be one and the same since use of the reach rod requires that the hands be close to the body. These dose rates are listed in Table 3-3. The line source geometry is shown in figure 3-6. The dose point considered is one meter from the panel face, 0.8128 meter above the floor, and 0.2032 meter from the panel's right side. R1

3.3.4 Valve Stem Penetrations

See Section 3.2.4.

3.3.5 CASP Integrated Dose Results

The integrated dose results are compiled in Table 3-5. These results are well below the requirements of 3 rem whole body and 18.75 rem extremities specified by the integrated dose criteria. R2

Table 3-1: Source Terms

Liquid Sources for a Non-Linebreak Accident

Representative Energy (MeV)	Production Rate @ 1 Hour (photons/sec/cm^3)
0.4	0.3379E+11
0.8	0.4225E+11
1.3	0.1403E+11
1.7	0.6152E+10
2.2	0.3334E+10
2.5	0.2544E+10
2.8	0.1511E+10
4.0	0.3101E+10
6.1	0.9508E+09

Degased Liquid Sources (30cm^3 total volume)

Representative Energy (MeV)	Production Rate @ 1 Hour (photons/sec/cm^3)
0.4	0.3171E+11
0.8	0.4108E+11
1.3	0.1363E+11
1.7	0.5915E+10
2.2	0.3117E+10
2.5	0.2290E+10
2.8	0.1511E+10
4.0	0.3098E+10
6.1	0.9508E+09

Gas Sources (270 cm^3 total volume)

Representative Energy (MEV)	Production Rate @ 1 Hour (photons/sec/cm^3)
0.4	0.2084E+10
0.8	0.1174E+10
1.3	0.3970E+09
1.7	0.2371E+09
2.2	0.2175E+09
2.5	0.2538E+09
2.8	0.2488E+06
4.0	0.3374E+06
6.1	0.2492E+01

Table 3-1: Source Terms (Con't)

Containment Atmosphere Sources for a Linebreak Accident

R1

Representative Energy (MeV)	Production Rate @ 1 Hour (photons/sec/cm^3)
0.4	0.2709E+10
0.8	0.1253E+10
1.3	0.4237E+09
1.7	0.2028E+09
2.2	0.1450E+09
2.8	0.2528E+08
4.0	0.2606E+07
6.1	0.1357E+02

(Source terms were prepared by Sargent & Lundy Engineers)

Table 3-2: Source Volumes

GSP

Operation	Volume (cm^3)
Purge	86.4
Capture in-line flask	116.4
Diluted or undiluted liquid sample	36.0
Diluted gas	303.4 (gas) 30.0 (liquid)

CASP

Operation	Volume (cm^3)
Purge & Sampling	12.4

R1

Table 3-3: Dose Rates

GSP

Operation	Dose Rate (mrem/hr)
Purge	1907
Capture in-line flask	2532
Diluted or undiluted liquid sample	554.7
Diluted gas	331.6

CASP

Operation	Dose Rate (mrem/hr)
Purge & Sampling	15.6

R1

Table 3-4: CSP Integrated Doses

Operation	Time in field (min)	Dose (mrem)	
Purge	5	158.9	
Capture in-line flask	3	126.6	
Strip gas	6	62.5	
Subtotal for initial operations		348	
To obtain undiluted or diluted liquid sample	5	46.2	R2
Total		394.2	R2
To obtain diluted gas	5	27.6	
Total		375.6	

Table 3-5: CASP Integrated Dose

R1

Operation	Time in field (min)	Dose (mrem)
Purge	3	0.8
Sampling	1	0.3
	TOTAL	1.1

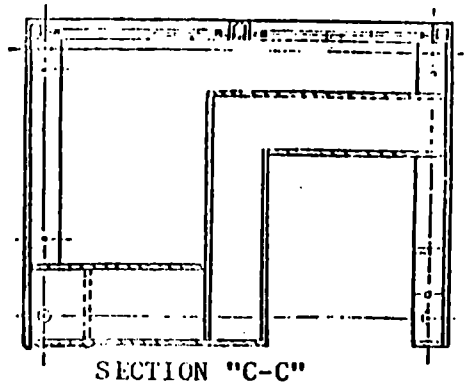

SECTION "C-C"

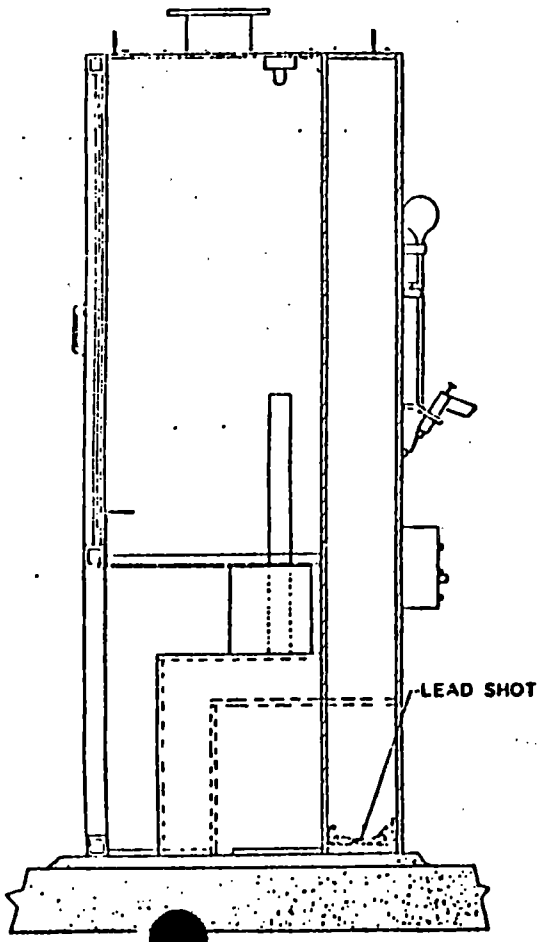

ION "A-A"

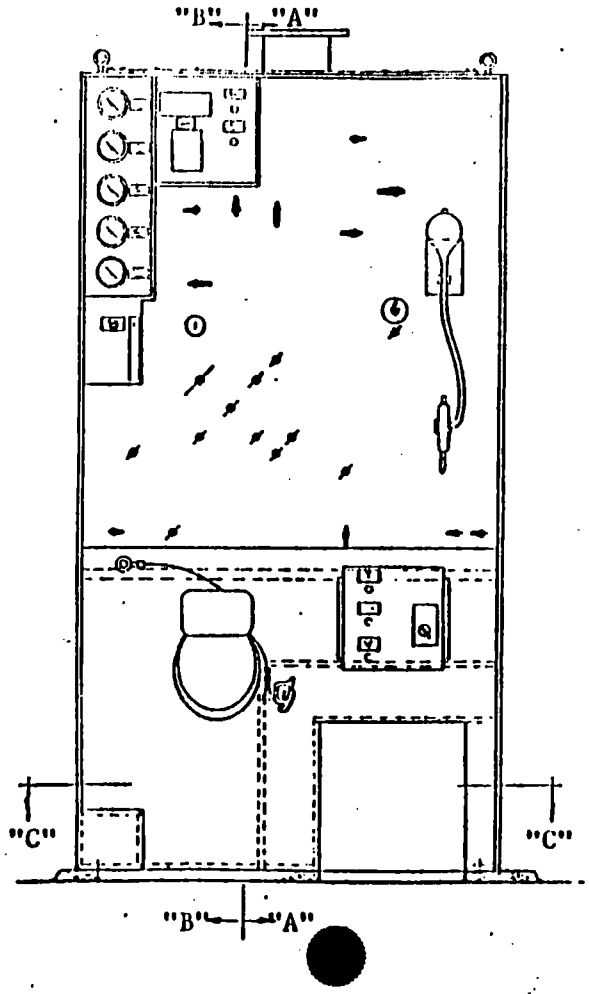

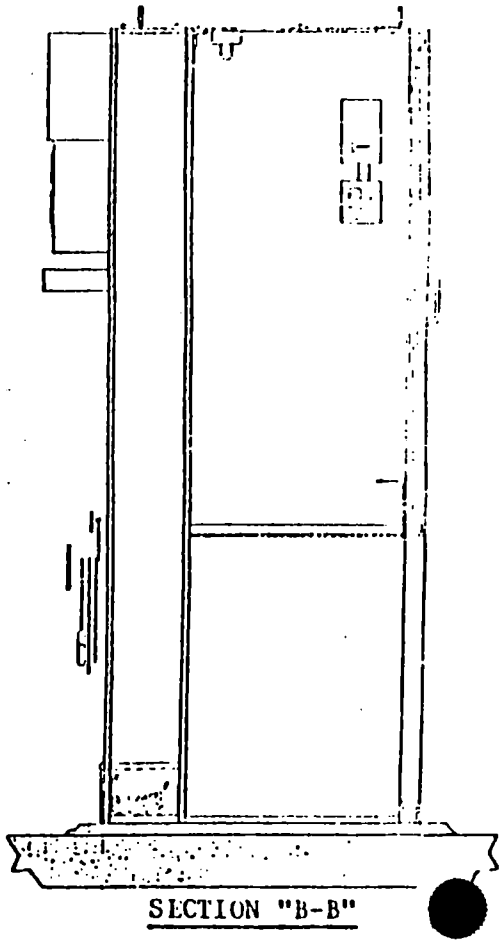

SECTION "B-B"

FIGURE 3-1

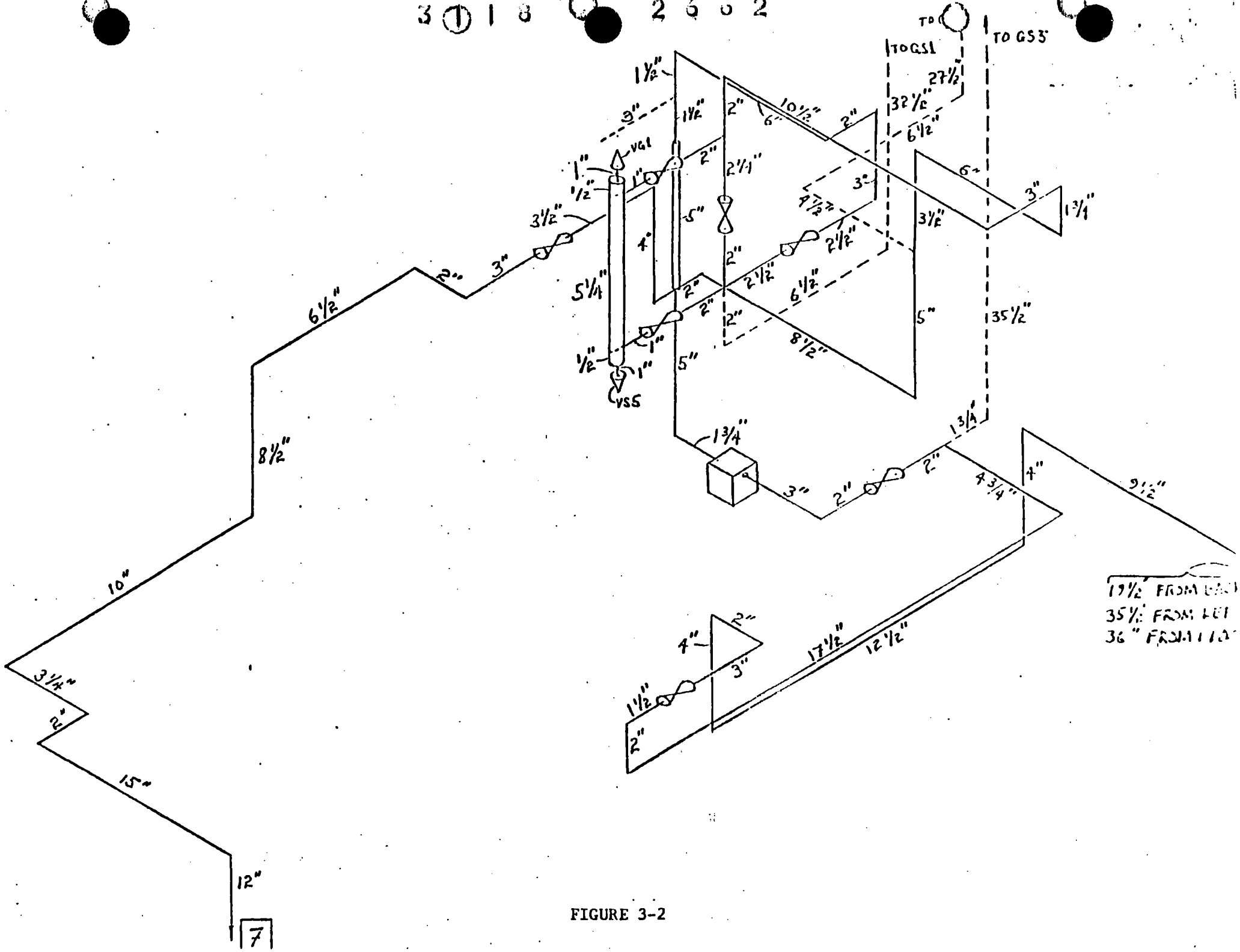

FIGURE 3-2

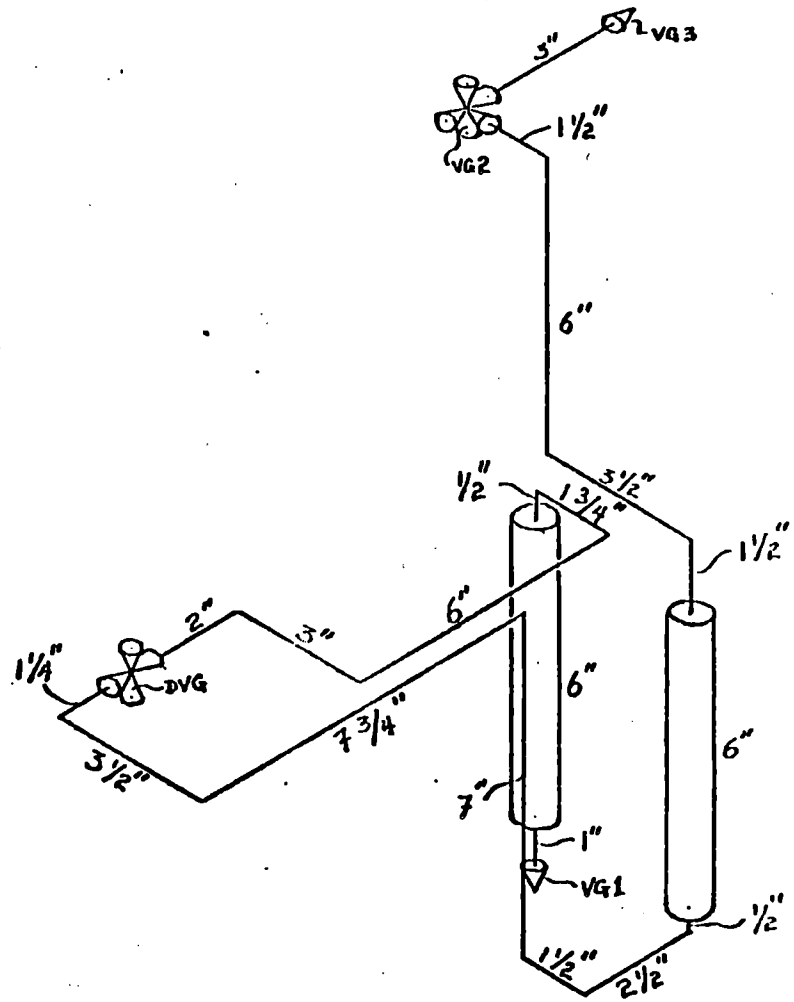

FIGURE 3-3

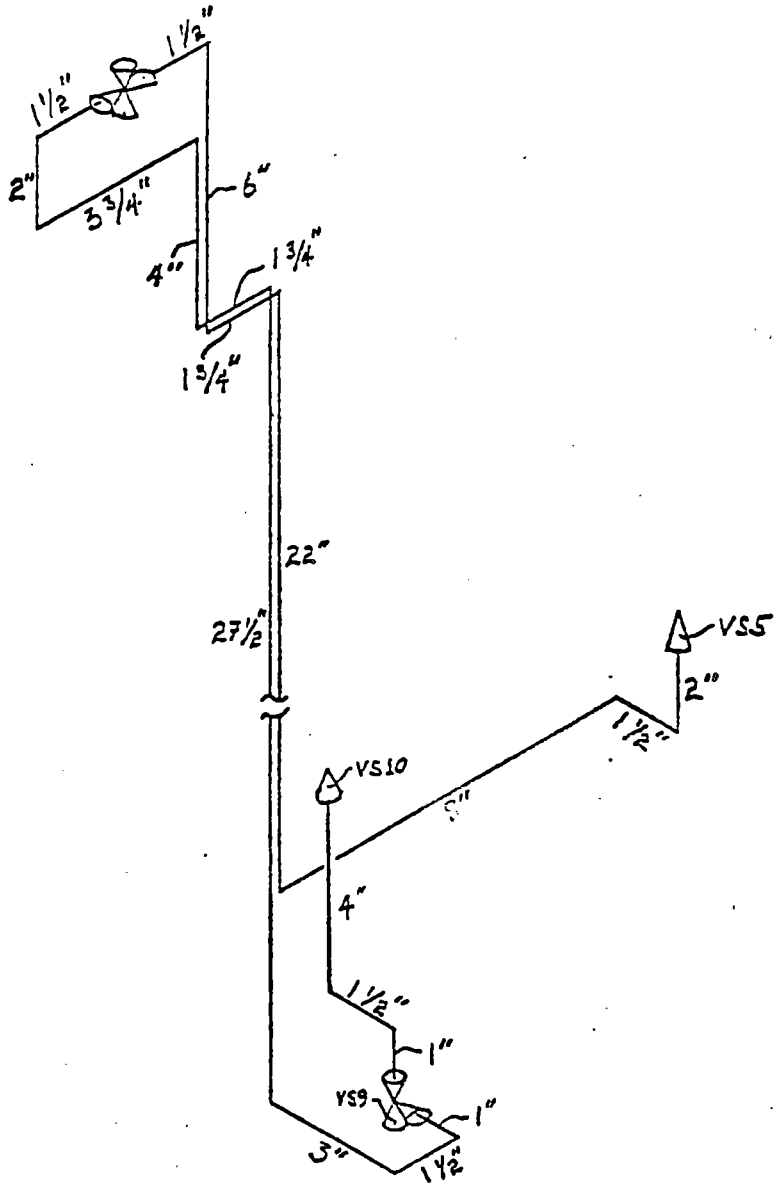

FIGURE 3-4

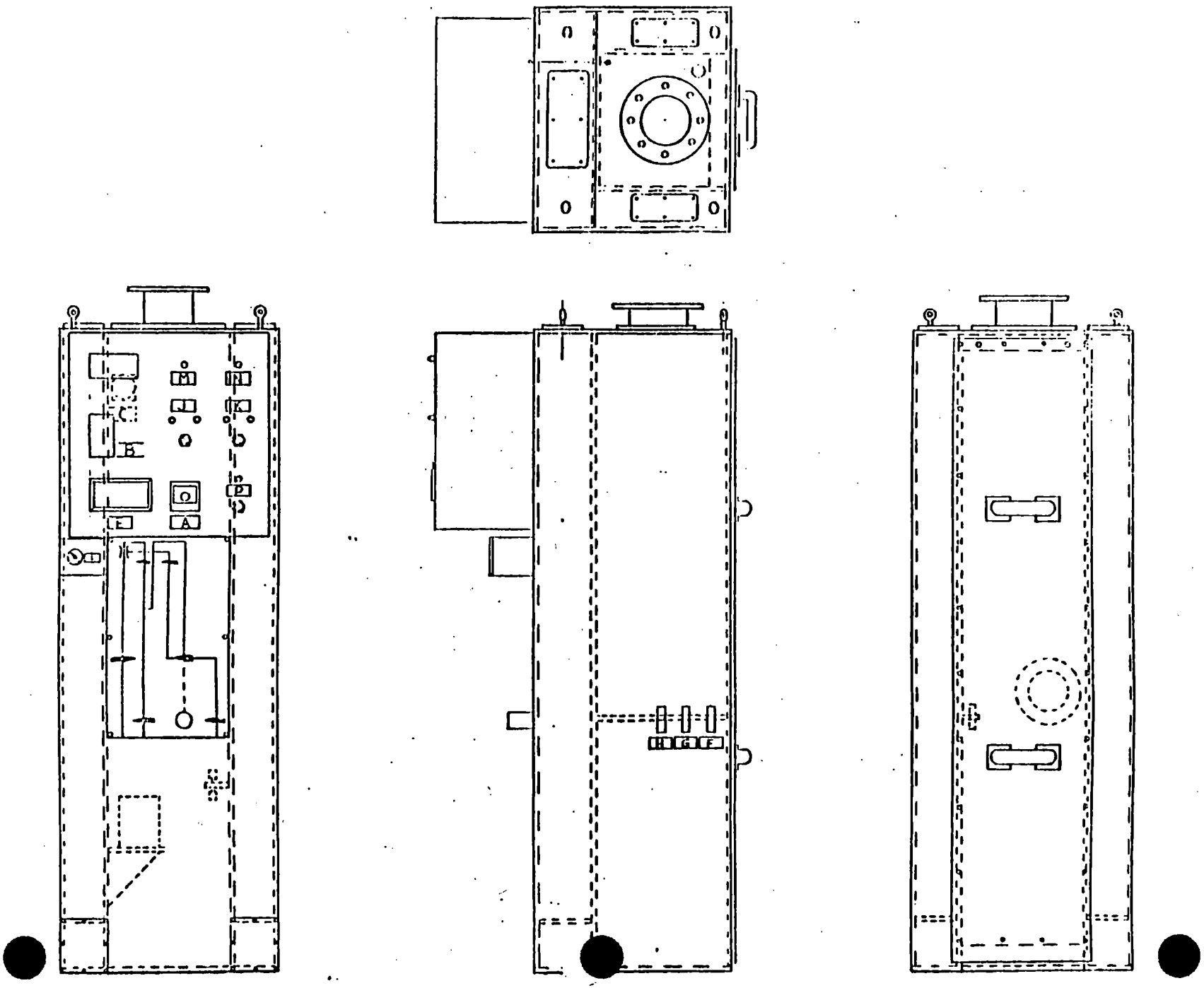
M
N
L
K
C
B
D
E
A
H
G
F

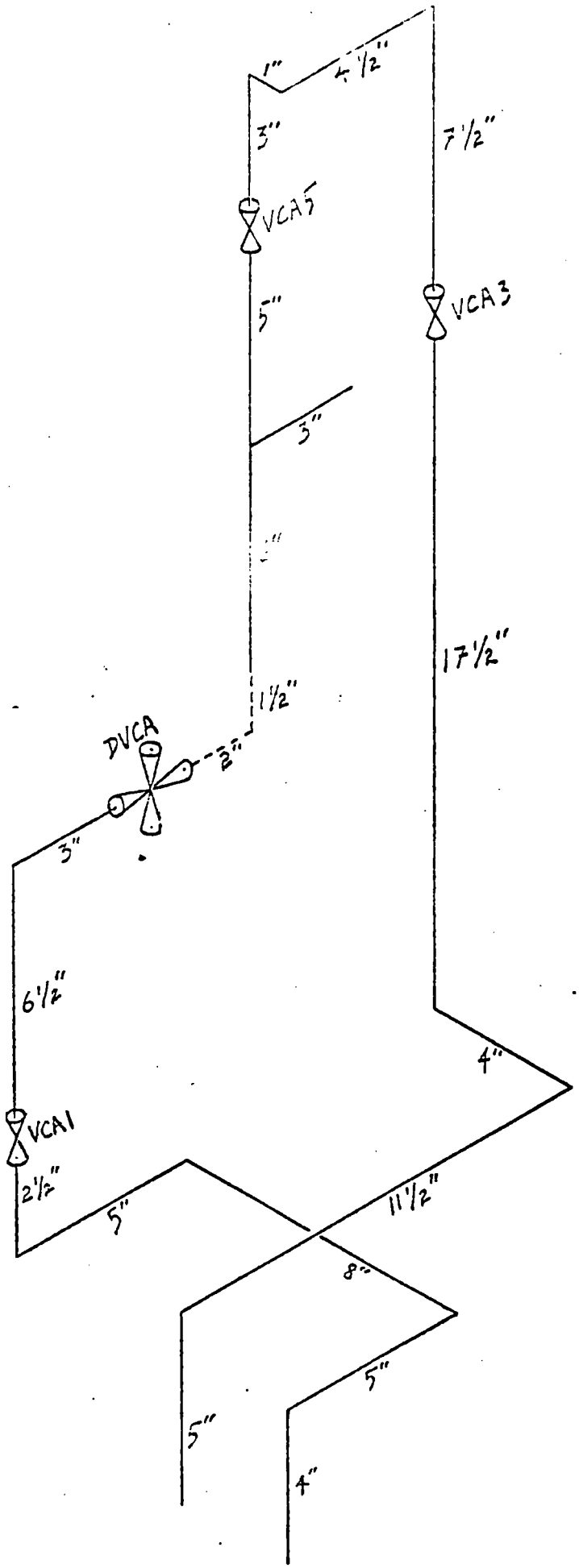
1"
4 1/2"
3"
7 1/2"
VCA5
5"
VCA3
3"
17 1/2"
1 1/2"
DVCA
3"
3"
6 1/2"
4"
VCA1
2 1/2"
5"
11 1/2"
8"
5"
5"
4"

FIGURE 3-6

References

Arcieri, W.C., "Evaluation of the Dose Rate and Shielding Requirements for the HRSS Equipment", NUS 3872, (October 1981).

Etherington, Harold, Nuclear Engineering Handbook, McGraw-Hill.

Jaegar, R.G., Engineering Compendium on Radiation Shielding, Volume 1, Springer-Verlag New York, Inc., (1968).

Stevens, Paul N. and Trubey, David K., "Weapons Radiation Shielding Hand-Book", DNA-1893-3, Rev. 1, (March 1972).

CERTIFICATE OF AUTHETICITY

This is to certify that the microphotographic images appearing on this roll of mocrofilm are accurate reproductions of the records of:

Consumers Power Co.,

and were microfilmed in the regular course of business pursuant to established routine company policy for systems utilization and/ or for the maintenance and preservation of such records through the storage of such microfilms in protected locations.

It is further certified that the photographic processes used for microfilming of the above records were accomplished in a manner and on microfilm which meets the recommended requirements of the Records Management Department for permanent microphotographic reproductions.

5/9/84	D. Bostwick
Date Microfilmed	Camera Operator
Graphic Services	K. Rosenow
Location	Authorized Signature

3 1 1 3 2 5 6 6

Consumers Power Company

END OF ROLL

3113 2569

Consumers Power Company

START OF ROLL

Cartridge Number

3119

3119 0001

3119 0002

CERTIFICATE OF AUTHETICITY

This is to certify that the microphotographic images appearing on this roll of mocrofilm are accurate reproductions of the records of:

Consumers Power Co.,

and were microfilmed in the regular course of business pursuant to established routine company policy for systems utilization and/or for the maintenance and preservation of such records through the storage of such microfilms in protected locations.

It is further certified that the photographic processes used for microfilming of the above records were accomplished in a manner and on microfilm which meets the recommended requirements of the Records Management Department for permanent microphotographic reproductions.

5/9/84
Date Microfilmed

D. Bartosek
Camera Operator

Graphic Services
Location

W. Rosenger
Authorized Signature