Consumers Power Company

General Offices: 212 West Michigan Avenue, Jackson, MI 49201 • (517) 788-0550

November 24, 1981

Director, Nuclear Reactor Regulation
Att Mr Dennis M Crutchfield, Chief
Operating Reactors Branch No 5
US Nuclear Regulatory Commission
Washington, DC 20555

DOCKET 50-255 - LICENSE DPR-20 -
PALISADES PLANT - RESPONSE TO ADDITIONAL NRC QUESTIONS REGARDING ADEQUACY OF STATION POWER

A conference telephone call was held October 9, 1981 with Mr A Udi, consulting reviewer for the NRC and Consumers Power Company to discuss questions regarding the adequacy of station power for our Palisades Plant. As a result of that call, three (3) questions, which Consumers Power committed to respond to in a timely manner were identified. These questions and Consumers Power Company responses are as follows:

NRC Question #1

What is the basis for the maximum grid voltages as documented in the 10/2/78 submittal from DPHoffman (CPCo) to DLZiemann (USNRC)?

Response to Question #1

The maximum grid voltages of 2453V on the 2400V buses and 475V on the 480V buses resulted from voltage drop calculations which assumed the following:

1. maximum grid voltage of 362kV (1.05 pu),

2. main generator supplying full power to the grid with reactive load corresponding to a generator output voltage of 23kV, and

3. minimum station load during normal operating conditions

It should be noted that the calculated maximum voltages of 2453V and 475V are expected regardless of whether the 2400V and 480V buses are supplied by either the station power transformer or the start-up transformer. It should also be noted that the Consumers Power Company plans to conduct a formal, analytical review of the transmission network voltage at Palisades early next year. The review, presently scheduled to be completed by the end of April, will be used to reevaluate the expected minimum and maximum voltages experienced on the plant buses.

A015
S.1

NRC Question #2

What happens to the station batteries when the charger input voltage drops below 480V-10% or 432V?

Response to Question #2

As reported during the referenced telephone conversation, the minimum expected grid voltage is 1.000 per unit on a 345kV base. Therefore, with the plant off-line the corresponding per unit (pu) voltages at the battery charger input motor control centers is 0.9213 for MCC #1 and 0.9204 for MCC #2. Also reported was a minimum expected per unit voltage of 0.9134 for MCC #1 and 0.9158 for MCC #2 during the condition in which the plant is on-line and the generator is supplying the station loads. (It should be noted that during this condition, the generator is considered to be operating at 1.0048 pu on a 21kV base at 95 MVARs in.) Since the minimum expected per unit voltages at both MCCs (and, therefore, at the input to the chargers) is above 0.9000 during either condition and the charger's rated input is 480V $\pm$ 10%, the Consumers Power Company expects the battery chargers to provide rated output to maintain the station batteries charged during normal conditions.

During a loss of off-site power, however, when the diesel generators are required to carry the station loads the per unit MCC voltages drop to a minimum level of 0.8926 for MCC #1 and 0.8678 for MCC #2. These values were submitted to the NRC in Table 1 of letter BDJohnson (CPCo) to D M Crutchfield (USNRC) dated 7/29/81. These values were also reported in the referenced telephone conversation.

Since the MCC #1 per unit voltage closely approximates the lower limit of the chargers input rating as described in the preceding paragraph, only the MCC #2 per unit voltage of 0.8678 (or 87% of 480V) causes concern. As a result, Bechtel Associates was requested to evaluate the charger capability given an input voltage of 87% of rated (see Attachment #1). As can be seen in the Bechtel response (see Attachment #2), it is expected that given an input voltage of 87%, the charger will continue to maintain an operable d-c system at a slightly lower than normal voltage (somewhere between 131 and 125V d-c) with a fully charged battery.

NRC Question #3

What is the setpoint of the "Battery Chargers Power Off" alarm? Is the alarm located in the control room?

Response to Question #3

As shown in Attachment #3, a contact in each battery charger (eg, Contact 74-1 in battery charger #1, Contact 74-2 in battery charger #2, etc) closes to annunciate a common alarm located at Panel C-11 in the control room. Each one

of these contacts is actually a part of its charger's electronic alarming device. Based on the vendor's instruction manual and on contacts with plant personnel and with Bechtel Associates, it is the opinion of the Consumers Power Company that these electronic devices generate the control room annunciation whenever their respective charger's output drops to 105V d-c. To confirm this opinion, the Consumers Power Company plans to test one of these devices at its earliest opportunity. In addition, the Consumers Power Company plans to add these devices to the plant's routine maintenance program.

Brian D. Johnson

Brian D Johnson
Senior Licensing Engineer

CC Director, Region III, USNRC
NRC Resident Inspector - Palisades

Attachments

Attachment 1

Consumers Power Company

General Offices: 212 West Michigan Avenue, Jackson, MI 49201 • (517) 788-0550

TONR 69-81

October 5, 1981

Mr Tan Moorthy
Bechtel Power Corporation
Mail Code #12447
777 E Eisenhower Parkway
P O Box 1000
Ann Arbor, MI 48106

Dear Tan,

During our telephone conversation on 9/29/81, you indicated that Bechtel studies have shown that the battery chargers at the Palisades Plant are capable of supplying rated output during certain undervoltage conditions. The conditions that you specified were: 1) the charger input voltage is equal to or greater than 85% of its rated input (480V) and 2) the output voltage select potentiometer is not set at its maximum voltage setting of 147 volts. As we concluded during our conversation, if required, I would transmit this information to the NRC via telephone as you would follow up with a letter confirming the aforementioned charger capability. This letter serves as formal request for that confirmation.

Given the above charger capability, it can be said that the chargers should always maintain rated output during both normal and emergency conditions since: 1) the charger input voltage never drops below 87% during either condition and 2) the output voltage potentiometer is set for 130V (float) and 140V (equalize). The potentiometer settings for the new batteries will be 131V (float) and 138V (equalize).

Sincerely,

Kerry A Toner

Kerry A Toner
Senior Engineer
Nuclear Plant Support

CC: KWBerry
UFI #950-05254-49120

Attachment 2

Bechtel Associates Professional Corporation

777 East Eisenhower Parkway
Ann Arbor, Michigan

Mail Address: P.O. Box 1000, Ann Arbor, Michigan 48106

November 10, 1981

Mr. K. Toner
Nuclear Plant Support Dept.
Consumers Power Company
1945 West Parnall Road
Jackson, Michigan 49201

Consumers Power Company
Palisades Plant
CPCO-GWO-9062
Bechtel Job 12447-057
Palisades Battery Replacement Project
OPERATION OF CLASS 1E BATTERY CHARGERS AT VOLTAGES BELOW 432 VOLTS AC
File: 0275
81-12447/057-16

Reference: a) Telecon between you and T. Moorthy/P. K. Smith on September 30, 1981

b) Letter TONR 69-81 dated October 5, 1981, from CPCo to Bechtel

Dear Mr. Toner:

Name plate data and vendor contacts indicate that Palisades Class 1E battery chargers are designed to operate continuously at input voltage range between 432 to 528 volts AC, 3 ph, 60 HZ, that is, 480V ± 10%.

During the reference telecon, the operation of these chargers at input voltages down to 87% of the nominal voltage (of 480V) was discussed. Your reference (b) letter confirmed our discussions.

Our in-depth technical review including vendor contacts has lead to the following conclusions relating to the operation of Palisades 125V DC system under conditions of lower than 90% (less than 432V AC) input voltage to the battery chargers:

a. The chargers are capable of delivering 200A DC at 147V DC with AC input voltage of 432V.

b. At voltage inputs below 432V AC to the charger, the charger will continue to self regulate in an attempt to maintain maximum DC output currents and voltages.

c. Review of charger internals and vendor contacts indicate that at AC system voltages below 432 volts, the charger will not trip due to low input voltage. It is likely that at voltages as low as 70% on the 480V system, at output currents below the rated current of the charger, the charger will continue to deliver DC output currents, even though the voltage may drop correspondingly.

d. Since the Palisades chargers are normally set to float at approximately 131V DC, when the input AC voltage to charger falls below 432V AC, the output may fall below 131V DC. In case the charger output voltage falls below the battery terminal voltage, the battery will start sharing part of the load current.

e. During the initial period following the onset of low voltage condition at the input to the charger, the fully charged battery will attempt to maintain 125V DC on the DC buses and therefore the charger may deliver low DC currents, well below the rated output of 200 A. However, as the batteries continue to discharge, at some point of time, the DC bus voltage will reach a value below the charger output voltage. At this point, the charger will take over and start delivering increasing output currents. Subsequently, the load sharing between the battery and charger will continue to be balanced automatically depending on the charger output voltage and battery voltage.

f. Palisades FSAR permits operation of DC buses at voltages down to 105V DC. Therefore, postulating a scenario of charger operation at AC system voltages somewhat below 90%, such as 87%, it is highly improbable that the charger output voltage will be so low as to permit discharge of batteries down to 105 volts. A more likely consequence of such a scenario will be the continued satisfactory operation of DC system at a slightly lower voltage (between 131V and 125V DC) with a fully charged battery.

In case of any questions, please contact the writer.

Very truly yours,

P. K. Smith
Project Engineer

TM/PKS/lac
cc: Mr. T. E. Leva, CPCo, Palisades

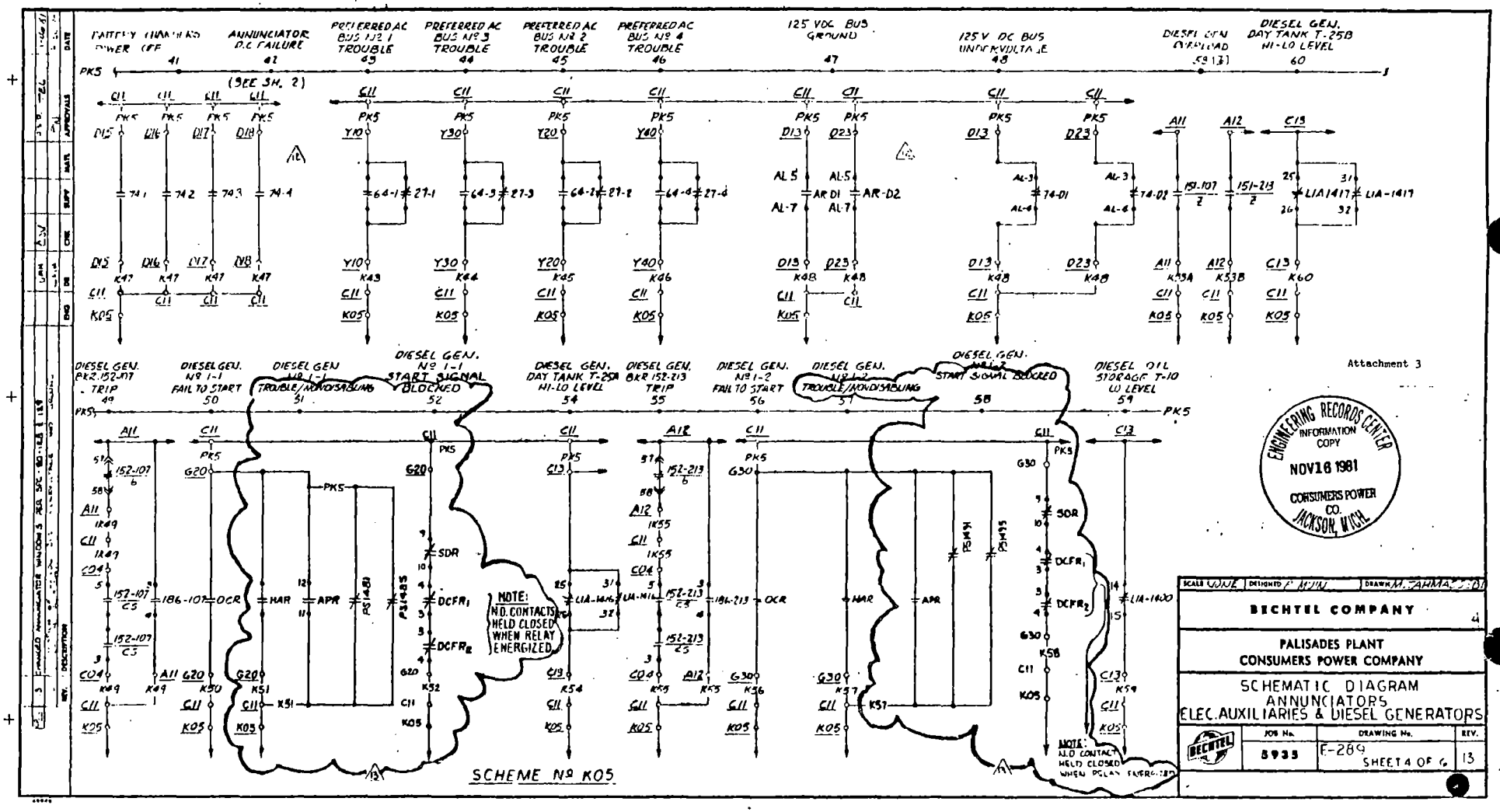
BATTERY CHARGER POWER OFF 41
ANNUNCIATOR D.C FAILURE 42
PREFERRED AC BUS NO 1 TROUBLE 43
PREFERRED AC BUS NO 3 TROUBLE 44
PREFERRED AC BUS NO 2 TROUBLE 45
PREFERRED AC BUS NO 4 TROUBLE 46
125 VDC BUS GROUND 47
125 V DC BUS UNDERVOLTAGE 48
DIESEL GEN OVERLOAD 59 (3)
DIESEL GEN. DAY TANK T-25B HI-LO LEVEL 60
(SEE SH. 2)
DIESEL GEN. BKR 152-107 TRIP 49
DIESEL GEN. NO 1-1 FAIL TO START 50
DIESEL GEN NO 1-1 TROUBLE/NONDISABLING 51
DIESEL GEN. NO 1-1 START SIGNAL BLOCKED 52
DIESEL GEN. DAY TANK T-25A HI-LO LEVEL 54
DIESEL GEN. BKR 152-213 TRIP 55
DIESEL GEN. NO 1-2 FAIL TO START 56
DIESEL GEN. NO 1-2 TROUBLE/NONDISABLING 57
DIESEL GEN. NO 1-2 START SIGNAL BLOCKED 58
DIESEL OIL STORAGE T-10 LO LEVEL 59
NOTE: NO CONTACTS HELD CLOSED WHEN RELAY ENERGIZED.
NOTE: NO CONTACT HELD CLOSED WHEN RELAY ENERGIZED
SCHEME NO K05
Attachment 3
ENGINEERING RECORDS CENTER INFORMATION COPY NOV 16 1981 CONSUMERS POWER CO. JACKSON, MICH.
BECHTEL COMPANY
PALISADES PLANT
CONSUMERS POWER COMPANY
SCHEMATIC DIAGRAM
ANNUNCIATORS
ELEC. AUXILIARIES & DIESEL GENERATORS
JOB No. 8933
DRAWING No. E-289
SHEET 4 OF 6
REV. 13