Consumers Power Company

General Offices: 212 West Michigan Avenue, Jackson, MI 49201 • (517) 788-0550

September 23, 1981

Director, Nuclear Reactor Regulation
Att Mr Dennis M Crutchfield, Chief
Operating Reactors Branch No 5
US Nuclear Regulatory Commission
Washington, DC 20555

DOCKET 50-255 - LICENSE DPR-20 -
PALISADES PLANT - SEP TOPIC VI-7.C.1, INDEPENDENCE OF
REDUNDANT ONSITE POWER SOURCES

By letter dated November 18, 1980, the NRC issued for comment a draft evaluation of SEP Topic VI-7.C.1 for the Palisades Plant. Attached are the Consumers Power Company comments on that document.

Robert A Vincent

Robert A Vincent
Staff Licensing Engineer

CC Director, Region III, USNRC
NRC Resident Inspector - Palisades

RECEIVED
SEP 30 1981
U.S. NUCLEAR REGULATORY COMMISSION

A035
S 1/1

8110010160 810923
PDR ADOCK 05000255
P PDR

PALISADES PLANT - SEP TOPIC VI-7.C.1
COMMENTS ON NRC EVALUATION

Corrections

1. Sect V.A, first paragraph: Diesel Generator 1-1 supplies 2400 volt bus 1C, station power transformer 11, 480 volt bus 11 and 480 volt MCC-1. D/G 1-2 supplies 2400 volt bus 1D, station power transformer 12, 480 volt bus 12 and 480 volt MCC-2. See drawing E-1 attached.

2. Sect V.A, second paragraph: Both chargers are not normally connected to each DC bus. Plant procedure SOP-30 (item 6.7) states that the battery chargers should be operated as pairs; i.e. either chargers 1 and 2 or chargers 3 and 4 should be used during normal operation. This pairing results in one charger operating on each DC bus, and diverse power supplies to each operating charger.

3. Sect V.A, second paragraph: Charger 2 is powered from MCC-2. See drawing E-1 attached.

4. Sect V.A, fourth paragraph: The Y01 transfer switch can be operated manually as well as automatically.

   In addition, as discussed in CPCo letter of August 17, 1981 (Comment 48) in response to Topic VII-3, sufficient instruments exist independent of bus Y01 to allow taking the plant to a safe shutdown condition. The only instruments necessary are pressurizer level, pressurizer pressure, steam generator level and PCS temperature. These instruments are available from the redundant preferred AC busses.

5. Sect V.B, Item 3: Control circuitry exists for the 480 volt tie breakers 52-1118 and 52-1217 to auto trip these breakers upon either of the two conditions specified below. (These conditions are shown in drawing E-17-2.)

   1) A tie breaker auto trip will occur whenever an under-voltage condition exists at the secondary of startup transformer #1-2 coincident with a reactor or turbine trip, and prior to the closure of the diesel generator output breaker.

   2) A tie breaker auto trip will occur whenever an under-voltage condition exists on 2400 volt bus 1C or 1D and the associated diesel generator output breaker is open. It should be noted that an under-voltage condition on bus 1C opens tie breaker 52-1118 and an under-voltage condition on bus 1D opens tie breaker 52-1217.

6. Sect V.B, Item 5: As discussed above in correction 2, only one charger is normally connected to each DC bus. The charger input and output breakers can only be manually operated. There are no provisions for automatic control of these breakers. Upon loss of off-site power, the chargers which were in service prior to the power loss will again power the DC bus upon restoration of power from the diesel generators. The chargers that were not connected in service prior to the power loss remain out of service when on-site power becomes available.

7. Sect V.B, Item 5: The statement that the battery chargers are undersized is incorrect. The chargers were adequately sized for the station batteries which were originally installed in the plant, and are still adequate for the new batteries which are being installed during the current refueling outage. The following discussion pertains to the plant configuration which will exist after the current refueling outage, and should be considered an update of the staff evaluation.

The two new station batteries each have a nominal capacity of approximately 1800 A-H. The steady state DC loads will be approximately 86 amps on DC bus No 1 and 84 amps on bus No 2. These values include presently known loads which are being added by planned modifications, and apply to both normal and post-accident conditions.

Each of the two battery chargers available for each DC bus has a rated output of 200 amps. The single charger which is normally supplying each DC bus, therefore, has sufficient capacity to carry bus load as well as charge the battery at a rate of approximately 115 amps.

To facilitate CPCo design of the new batteries, a load study was performed to conservatively predict the required battery capacity for a post-accident condition involving a loss of off-site power. This study predicted that 523 A-H would be consumed by loads on DC bus No 1 and 666 A-H on DC bus No 2 over the two hour period following the off-site power loss. If the chargers remain available, they would supply 400 A-H to each bus over the two-hour period (200A capacity X 2 hrs). The total battery discharge, therefore, would only be approximately 123 A-H for station battery No 1 and 266 A-H for battery No 2. The batteries could clearly be recharged rapidly in this post-accident condition with the available capacity of the single charger on each bus. If the chargers remained unavailable throughout the post accident period, the new batteries have the capacity to carry DC loads for a substantial period of time beyond the first two hours until an off-site or on-site AC power source can be restored. The new station batteries have a capacity more than twice than that of the original batteries, and are obviously very conservatively sized.

It must also be noted that the dual charger configuration at Palisades offers a degree of redundancy and increased reliability over the configuration normally found at current plants. In a situation in which off-site power is lost and a diesel generator is not available, the redundant charger powered from the operable diesel can be used to carry DC loads and charge the battery in the opposite division. The probability that a DC bus will be lost in this situation is therefore greatly reduced. Palisades DC bus reliability would be expected to be greater than that offered by the more typical current design practice utilizing single chargers on each DC bus.

The above information is directly pertinent to the GDC-17 considerations which were discussed in SEP Topic VII-3 (NRC letter of January 24, 1981), and should also be considered in the continuing staff review of that issue.

8. Sect V.B, Item 7: The bypass regulator output breakers are interlocked to preclude supplying more than one preferred AC bus at a time. The interlock scheme has a key lock on each output breaker. The four breaker locks utilize a single key which is maintained by the Shift Supervisor. The key must be inserted in the desired breaker locking device before that breaker can be closed, and with a breaker closed, the key cannot be removed. Therefore only one breaker can be closed at a time.

RESPONSES TO DEVIATIONS, SECT VI

Deviation 1. As discussed in CPCo letter dated August 17, 1981, the only indications deemed necessary for achieving a safe shutdown condition are pressurizer level, PCS pressure, PCS temperature and steam generator levels. These indications are available from the redundant preferred AC busses which are independent of bus Y01. For convenience a tabulation of the available redundant instruments and their power supplies is attached. The 120 VAC instrument bus Y01 is certainly desirable, but it is not required.

Deviation 2. By letter dated March 3, 1981, CPCo agreed to submit a Technical Specification change to limit conditions in which busses 11 and 12 could be tied together.

Deviation 3. This deviation does not exist at Palisades. See the discussion above in Correction 5.

Deviation 4. This deviation does not exist at Palisades. See the discussion above in Correction 6.

Deviation 5. This deviation does not exist at Palisades. See the discussion above in Correction 8.

Deviations 6 & 7. Circuit separation is being addressed in response to 10CFR50.48. By CPCo letters dated March 19, 1981 and May 19, 1981, design information was submitted for proposed alternate shutdown capability for those instances where separation does not comply with 10CFR50 Appendix R requirements. This information is currently under NRC review, and will not be further discussed here.

## REQUIRED INDICATION FOR SAFE SHUTDOWN (pg 1 of 2)

| Indication Requirement | Necessary Transmitter/Indicator and (or) Recorder | Power Supply | Applicable Drawing (Attached) | Comments |
|---|---|---|---|---|
| 1) one level channel per steam generator | 1a) steam generator E-50A: LT-0751 A, B, C or D/LI-0751 A, B, C or D<br><br>1b) steam generator E-50B: LT0752A, B, C or D/LI-0752 A, B, C or D | 1) preferred panels Y-10, Y-20, Y-30 & Y-40 for channels A, B, C & D, respectively | 1) E-78, M-311-07-16, M-311-07-18 | 1) All four channels of steam generator level are supplied by the preferred panels. The range of these transmitters is 39.1-174.3" W.C. It should be noted that letter: R A Vincent to D M Crutchfield (NRC), dated 8/17/81, states in Item #26 that two wide range level channels are being installed per steam generator |
| 2) one wide range pressurizer pressure channel | 2a) PT0103/PI0103<br><br>2b) PT0105A or B/ sub-cooled margin monitor | 2a) panel YO-1<br><br>2b) preferred panels Y-30 for PT0105A & Y-40 for PT0105B | 2a) E-84-3, M-311-01-5<br><br>2b) E-84-6, M-311-01-6, M-311-01-6A | 2) The preferred wide range indicator PI0103 is supplied by the non-redundant YO-1 supply. The sub-cooled margin monitor is fed from the preferred supplies. Although the sub-cooled monitor does not provide a direct pressurizer pressure readout, its sub-cooled pressure reading can be readily converted to a direct pressurizer pressure. The ranges for these instruments are:<br>PT0103- 0-3000 psi<br>PT0105A&B - 0-2500 psi |

| Indication Requirement | Necessary Transmitter/Indicator and (or) Recorder | Power Supply | Applicable Drawing (Attached) | Comments |
|---|---|---|---|---|
| 3) one wide range temperature channel per PCS cold leg | 3a) cold leg 1A: TE0111A/TR0111<br>3b) cold leg 1B: TE0111B/TR0111<br>3c) cold leg 2A: TE0121A/TR0121<br>3d) cold leg 2B: TE0121B/TR0121 | 3a) Y-10<br>3b) Y-10<br>3c) Y-20<br>3d) Y-20 | 3) E-96-2<br>M-311-01-7,<br>M-311-01-13 | 3) All cold leg indicators are fed by the preferred supplies. The range of these instruments is 0-600°F. |
| 4) one wide range channel of pressurizer level | 4) LT0101/LIC0101 A or B<br>LT0102/LIC0102 A, B, C, D | 4a) Y-10<br>4b) Y-20<br>a) Y-10<br>b) Y-20<br>c) Y-30<br>d) Y-40 | 4) E-82-1, 2<br>E-82-4 | 4) Multiple indication is available through the LT0101 and 0102 schemes. The range of these instruments is 100.7" to 236". The range differs from the LT0103 scheme by applied density corrections. All are fed by the preferred AC supplies. |

GWO 8428
PRIMARY COOLANT SYSTEM
OVERPRESSURE PROTECTION SYSTEM

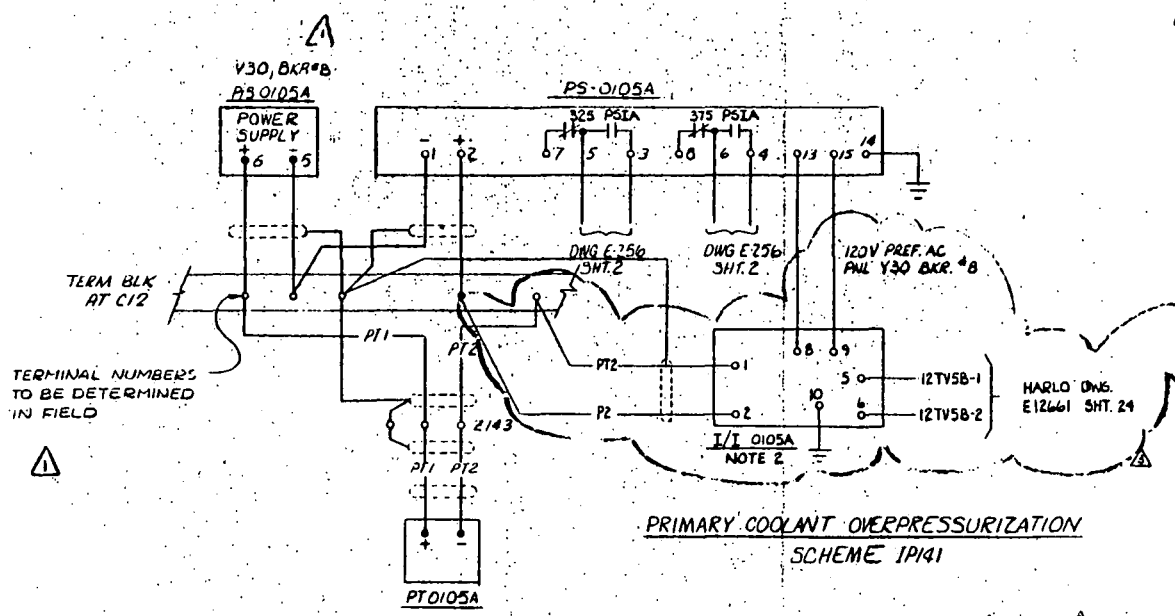


PRIMARY COOLANT OVERPRESSURIZATION
SCHEME IP141

NOTES:
1. SHIELDED TWISTED PAIR (TYPICAL #16 AWG WIRE)
2. ISOLATED TRANSMITTER (4-20mA DC TO 4-20mA DC) DEVAR INC. TYPE 18-119.

| DESCRIPTION | ADAPTER TABLE: PRESS. SWITCH | SCHEME | PRESS. TRANSMITTER | POWER SUPPLY | PREF. AC PNL NO. | PREF. AC BKR NO | LOC | PENETRATION CANNISTER NO. | ISOLATED CONVERTER |
|---|---|---|---|---|---|---|---|---|---|
| CHANNEL A | PS-0105A | IP 141 | PT-0105A | PS-0105A | Y-30 | B | C12 | Z-143 | I/I0105A |
| CHANNEL B | PS-0105B | IP 142 | PT-0105B | PS 0105B | Y-40 | B | C12 | Z-243 | I/I0105B |

ENGINEERING RECORDS CENTER INFORMATION COPY AUG 28 1981 CONSUMERS POWER CO. JACKSON, MICH.

SCALE NONE DESIGNED RDL

ENERGY INCORPORATED

PALISADES PLANT
CONSUMERS POWER COMPANY

SCHEMATIC DIAGRAM
PRESSURIZER PRESSURE CONTROL & MEASUREMENT CHANNEL INSTRUMENTATION

| JOB NO | DRAWING NO. | REV |
|---|---|---|
| 10512-055 | E-84 SHT 6 OF 6 | 3 |

| REV | DESCRIPTION | ENG | DR | CHK | SUPV |
|---|---|---|---|---|---|
| 3 | REVISED FOR FC-4 | | | | |
| 2 | REMOVED SETPOINTS FROM SCHEMATIC | FGB | PGB | | |
| 1 | ISSUED FOR RECORD FOR GWO 8428 | | | | |
| 0 | POLARITY CHANGED ON POWER SUPPLY | DAW | LCE | | |

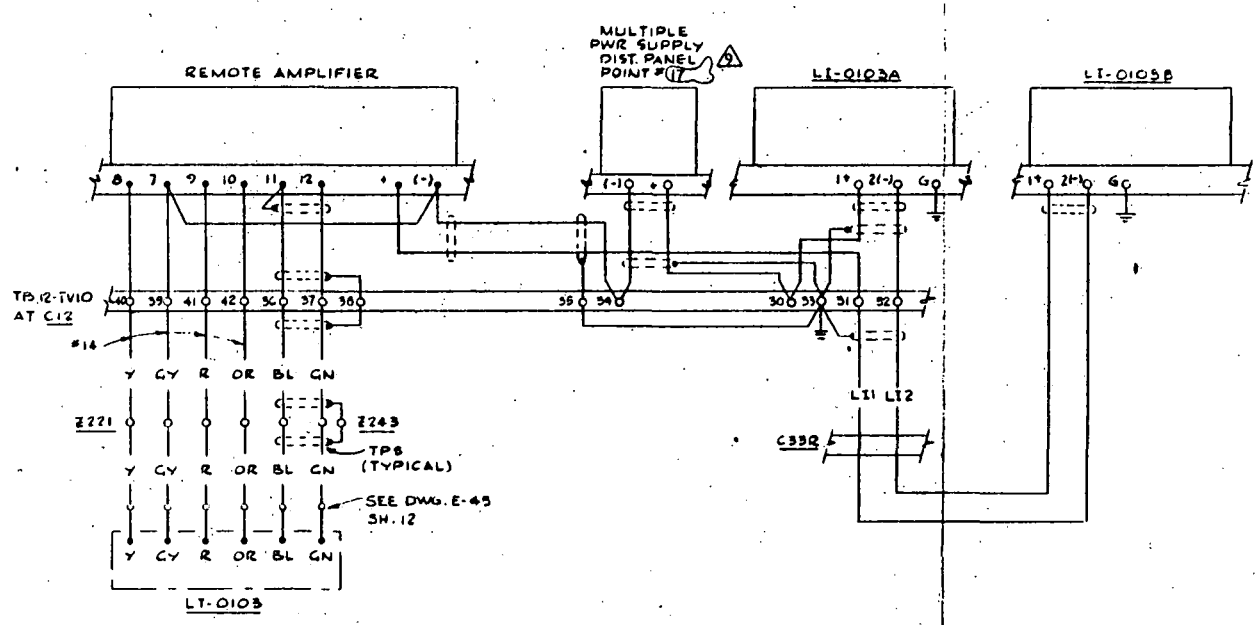


PRESSURIZER WIDE RANGE LEVEL INDICATOR

SCHEME IL34

C.E. REFERENCE DWG. No. 2966-D-3114
(FP 5935-NSSS-256)

ENGINEERING RECORDS CENTER
INFORMATION COPY
AUG 28 1981
CONSUMERS POWER CO.
JACKSON, MICH.

| REV. | DESCRIPTION | ENG | DR | CHK | SUPV | MAT | APPROVALS | DATE |
|---|---|---|---|---|---|---|---|---|
| 6 | POINT 27 INCORRECT. CHANGED TO POINT 17 | GJD | CJV | JAG | | | | 5-7-80 |

SCALE NONE | DESIGNED | DRAWN CYR

BECHTEL COMPANY

PALISADES PLANT
CONSUMERS POWER COMPANY

SCHEMATIC DIAGRAM
PRESSURIZER LEVEL CONTROL
INSTRUMENTATION

| JOB No. | DRAWING No. |
|---|---|
| 5935 | E-82 SH. 3 of 4 |

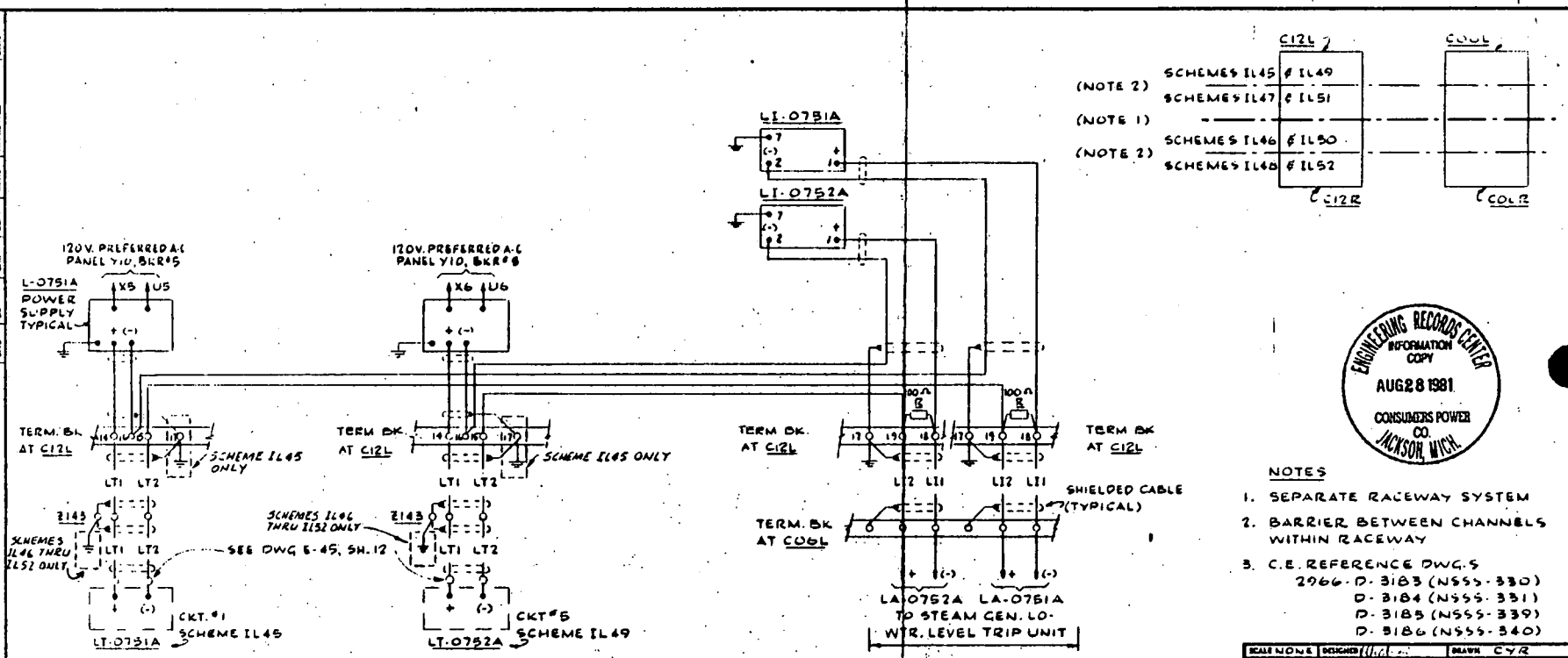


STEAM GENERATOR E-50 LOW LEVEL, CIRCUIT No. 1 & 5

SCHEMES IL45 & IL49

ADAPTER TABLE

| DESCRIPTION | CKT. NO. | SCHEME | LEVEL TRANS-MITTER | LEVEL INDICATORS L & LI | LEVEL INDICATORS LOC | POWER SUPPLY PNL | POWER SUPPLY BKR | PENETRATION CANISTER NO.# | 120V. A-C SUPPLY WIRES | LA LOC |
|---|---|---|---|---|---|---|---|---|---|---|
| STM. GEN. E-50A LO LEVEL | 1 | IL45 | LT-0751A | 0751A | C12L | Y10 | 5 | Z143 | X5, U5 | C06L |
| | 2 | IL46 | LT-0751B | 0751B | C12R | Y20 | 5 | Z243 | X5, U5 | C06R |
| | 3 | IL47 | LT-0751C | 0751C | C12L | Y30 | 5 | Z146 | X5, U5 | C06L |
| | 4 | IL48 | LT-0751D | 0751D | C12R | Y40 | 5 | Z246 | X5, U5 | C06R |
| STM. GEN. E-50B LO LEVEL | 5 | IL49 | LT-0752A | 0752A | C12L | Y10 | 5 | Z143 | X6, U6 | C06L |
| | 6 | IL50 | LT-0752B | 0752B | C12R | Y20 | 5 | Z243 | X6, U6 | C06R |
| | 7 | IL51 | LT-0752C | 0752C | C12L | Y30 | 5 | Z146 | X6, U6 | C06L |
| | 8 | IL52 | LT-0752D | 0752D | C12R | Y40 | 5 | Z246 | X6, U6 | C06R |

ENGINEERING RECORDS CENTER INFORMATION COPY AUG 28 1981 CONSUMERS POWER CO. JACKSON, MICH.

NOTES

1. SEPARATE RACEWAY SYSTEM
2. BARRIER BETWEEN CHANNELS WITHIN RACEWAY
3. C.E. REFERENCE DWG.S
   2966-D-3183 (NSSS-330)
   D-3184 (NSSS-331)
   D-3185 (NSSS-339)
   D-3186 (NSSS-340)

| REV. | DESCRIPTION | ENG | DR | CHK | SUPV | MATL | APPROVALS | DATE |
|---|---|---|---|---|---|---|---|---|
| 2 | REV'D PER CPCO AS BUILT | | | | | | | |
| 1 | REV PER FDN # 641 | | | | | | | |
| #3 | ISSUED AS BUILT 5935-0 | | | | | | | |

SCALE NONE | DESIGNED | DRAWN CYR

BECHTEL COMPANY

PALISADES PLANT
CONSUMERS POWER COMPANY

SCHEMATIC DIAGRAM
STEAM GENERATOR LEVEL
INSTRUMENTATION

| JOB No. | DRAWING No. |
|---|---|
| 5935 | E-78 |

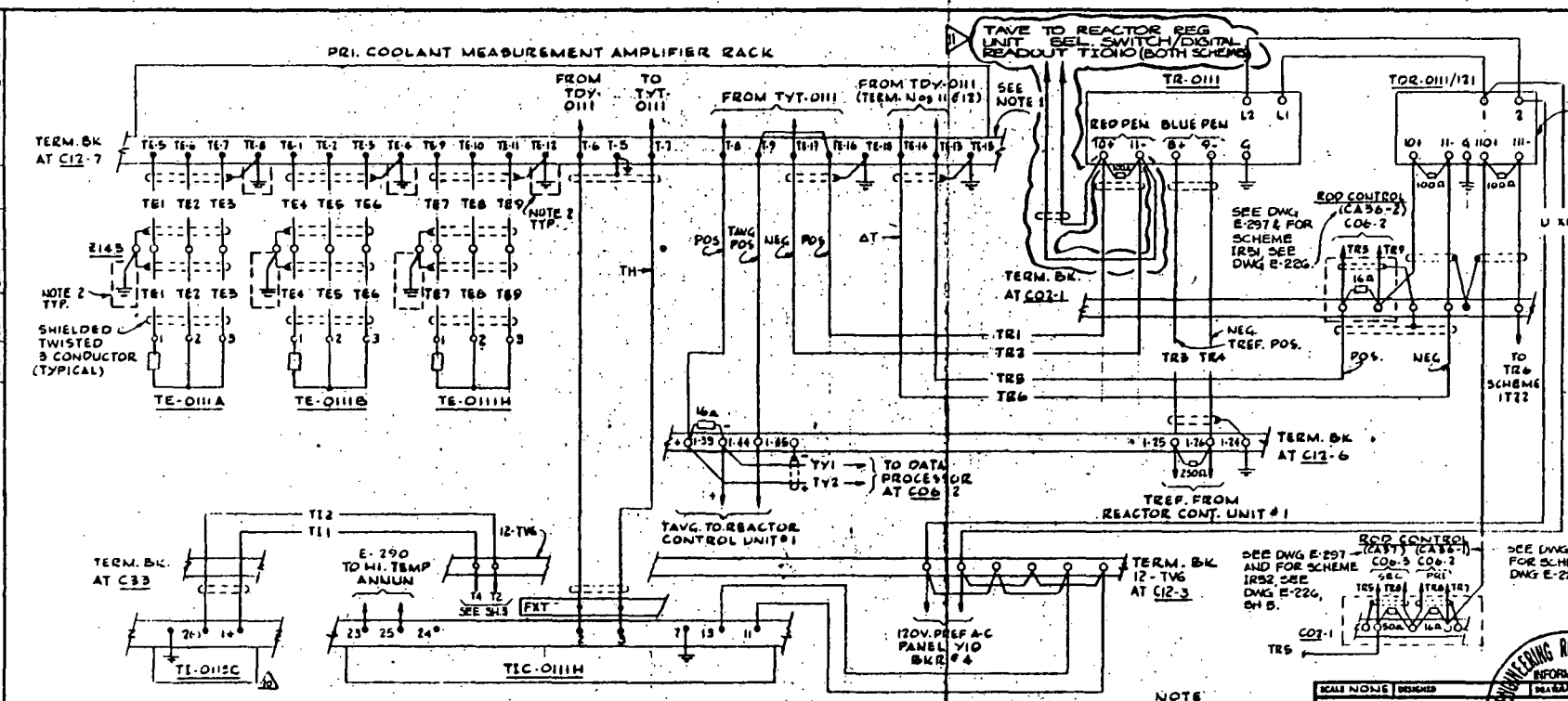


## PRIMARY LOOP TEMPERATURE MEASUREMENT CHANNEL No. 1

SCHEME IT21

C.E. REFERENCE DWG. Nos 2966-D-3105 & 3123 (FP 5936-N555-208 & 237.)

### ADAPTER TABLE

| PRI. LOOP TEMP MEASUREMENT CHANNEL NO. | SCHEME | TEMPERATURE ELEMENT TE- | | | TEMP. IND. CONTROLLER TIC- | LOC | TEMP. RECORDER | TEMP DIFF. RECORDER | LOC | PRI. COOLANT MEASUREMENT AMPLIFIER RACK SIGNALS TDY- | TYT- | LOC | REACTOR CONTROL UNIT | CONTROL PENETRATION CANISTER | 120V PREF. PNL | A-C BKR | TREF & TAVG REACTOR CONT. UNIT # |
|---|---|---|---|---|---|---|---|---|---|---|---|---|---|---|---|---|---|
| 1 | IT21 | 0111A | 0111B | 0111H | 0111H | C12-B | TR-0111 | TDR-0111 | CO2-1 | 0111 | 0111 | C12-7 | #1 | 2143 | Y10 | 4 | 1 |
| 2 | IT22 | 0121A | 0121B | 0121H | 0121H | C12-B | TR-0121 | TDR-0121 | CO2-1 | 0121 | 0121 | C12-7 | #2 | 2248 | Y20 | 4 | 2 |

NOTE

1. FOR TERMINAL BLOCK NUMBERS REFER TO C.E. DWG. 2966-D-3105 & 3123
2. ON SCHEME IT21 GROUND IS REMOVED FROM C12 AND ADDED TO 2143

CONTINUED ON SHEET 3

| REV. | DESCRIPTION | BY | CHK | SUPV | APPROVAL | DATE |
|---|---|---|---|---|---|---|
| 11 | REVISED PER SFC 79-025 ECN 10 SHOWN T1-0115C PER FC-1 | RGB | TLE | ERL | JWM | 3-3-80 8-1-77 |

SCALE NONE | DESIGNED | DRAWN C.V.R.

BECHTEL CORPORATION

PALISADES PLANT CO.
CONSUMERS POWER COMPANY

SCHEMATIC DIAGRAM
PRIMARY LOOP
INSTRUMENTATION

| JOB No. | DRAWING No. | REV. |
|---|---|---|
| 5935 | E-96 SH. 2 of 7 | 11 |

ENGINEERING RECORDS CENTER INFORMATION AUG 28 1981 CONSUMERS POWER CO. JACKSON, MICH.

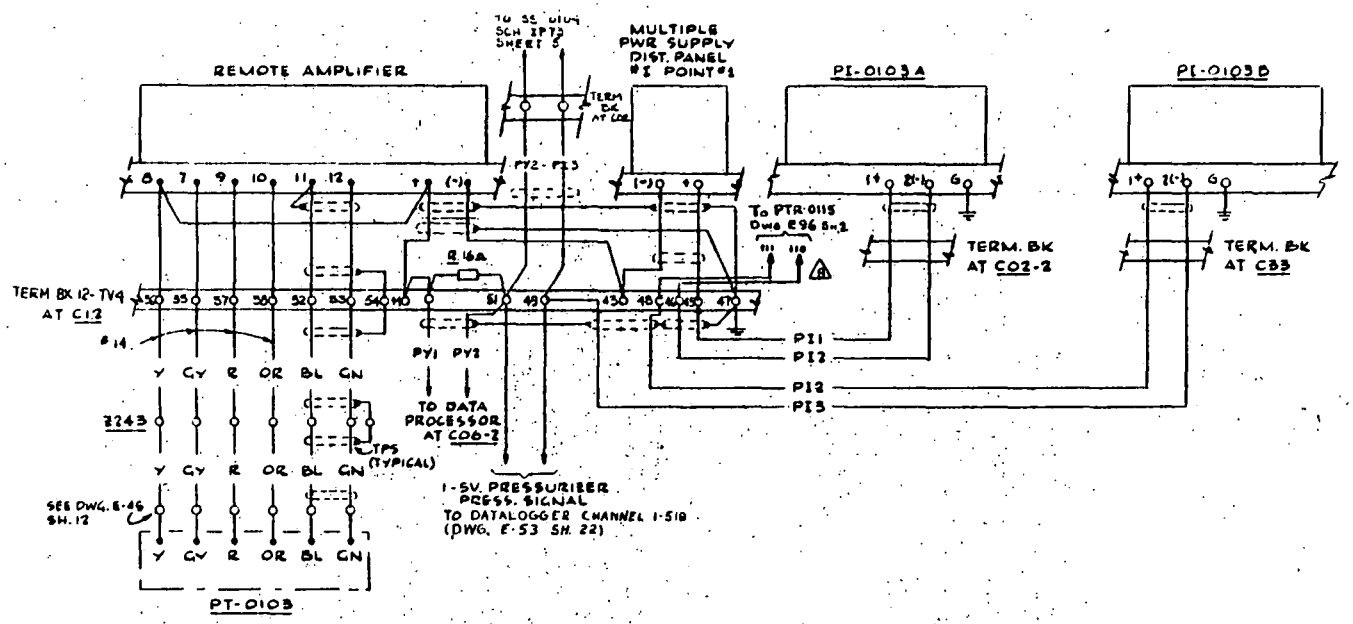


PRESSURIZER WIDE RANGE PRESSURE INDICATOR

SCHEME IP60

C.E. REFERENCE DWG. NO. 2966-D-3115
(FP 5935-NSSS-257)

ENGINEERING RECORDS CENTER
INFORMATION COPY
AUG 28 1981
CONSUMERS POWER CO.
JACKSON, MICH.

| SCALE NONE | DESIGNED | DRAWN CYR |
|---|---|---|

BECHTEL COMPANY

PALISADES PLANT
CONSUMERS POWER COMPANY

SCHEMATIC DIAGRAM
PRESSURIZER PRESSURE
CONTROL & MEASUREMENT
CHANNEL INSTRUMENTATION

| JOB No. | DRAWING No. | |
|---|---|---|
| 5935 | E-84 SH. 3 of 6 | 12 |

| REV. | DESCRIPTION | ENG | DR | CHK | SUPV | MAT | APPROVALS - O.S. | DATE |
|---|---|---|---|---|---|---|---|---|
| 10 | ISSUED FOR CONSTRUCTION (FWF MOD) GWO 7111 | | | | | | | |
| 9 | ADDED PR PER SEC 76-068 | CJB | | | | | | 8-4-77 |
| 11 | ISSUED FOR RECORD GWO 7111 | | | | | | | 7-6-79 |

| REV. | DESCRIPTION |
|---|---|
| 12 | REVISED PER FC-417 |

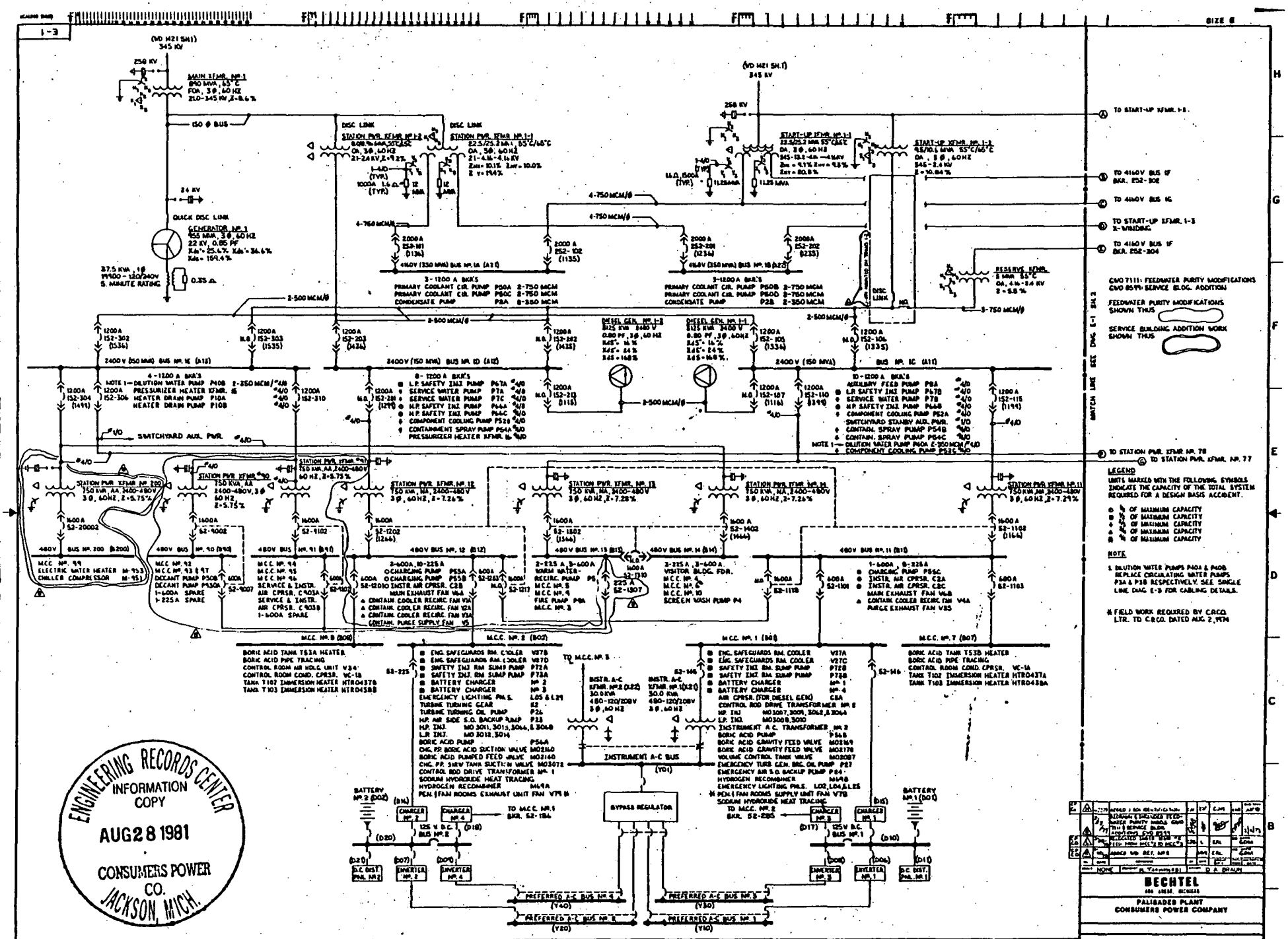


ENGINEERING RECORDS CENTER
INFORMATION COPY
AUG 28 1981
CONSUMERS POWER CO.
JACKSON, MICH.

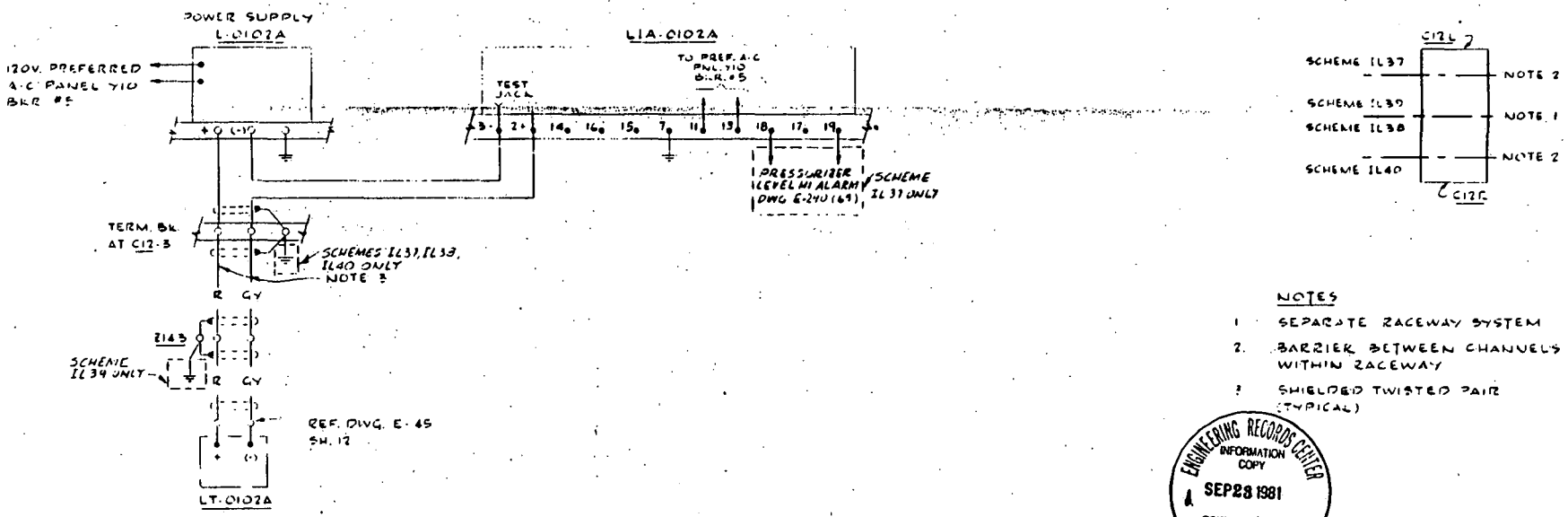


NOTES

1. SEPARATE RACEWAY SYSTEM
2. BARRIER BETWEEN CHANNELS WITHIN RACEWAY
3. SHIELDED TWISTED PAIR (TYPICAL)

ENGINEERING RECORDS CENTER
INFORMATION COPY
SEP 23 1981
CONSUMERS POWER CO.
JACKSON, MICH.

PRESSURIZER LEVEL CHANNEL A

J.E. REFERENCE DWG NO 2966-D-3117
(FP-5935-NSSS-287)

ADAPTER TABLE

| DESCRIPTION | SCHEME | LEVEL TRANS-MITTER | LEVEL INDICATOR | | PENETRATION CANISTER | 120 V. PREF. A-C | |
|---|---|---|---|---|---|---|---|
| | | | LIA | LOC. | | PNL | BKR |
| PRESS LEVEL CHANNEL A | IL37 | LT-0102A | 0102A | C12-3L | Z143 | Y10 | #5 |
| PRESS LEVEL CHANNEL B | IL38 | LT 0102B | 0102B | C12 BR | Z245 | Y20 | #5 |
| PRESS LEVEL CHANNEL C | IL39 | LT-0102C | 0102C | C12-2L | Z145 | Y30 | #5 |
| PRESS LEVEL CHANNEL D | IL40 | LT-0102D | 0102D | C12-1R | Z246 | Y40 | #5 |

| | | | |
|---|---|---|---|
| SCALE NONE | DESIGNED | | DRAWN CYR |

BECHTEL COMPANY

PALISADES PLANT
CONSUMERS POWER COMPANY

SCHEMATIC DIAGRAM
PRESSURIZER LEVEL CONTROL
INSTRUMENTATION

| JOB No. | DRAWING No. | REV. |
|---|---|---|
| 5935 | E-82 SH. 4 of 4 | 8 |

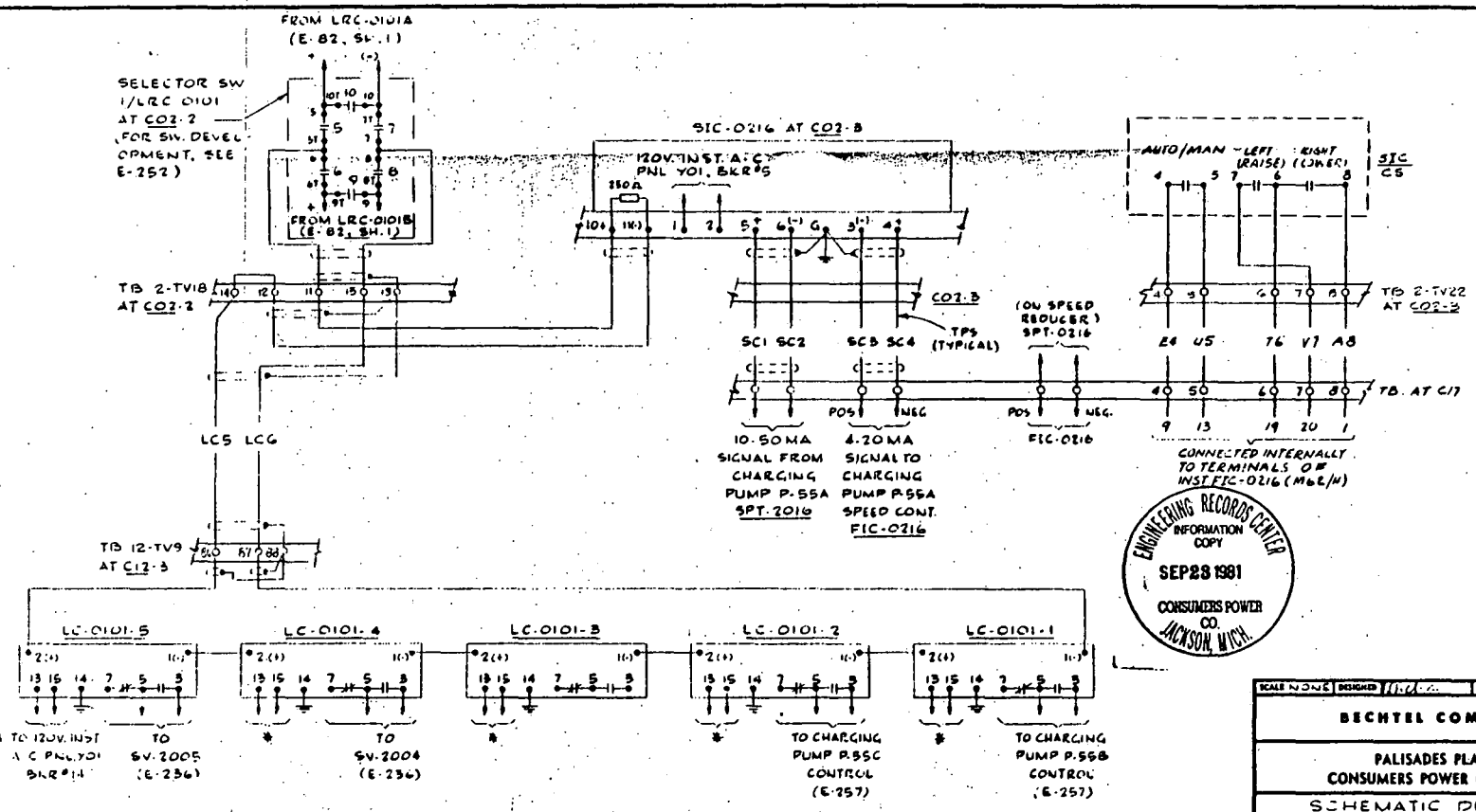


ENGINEERING RECORDS CENTER
INFORMATION COPY
SEP 23 1981
CONSUMERS POWER CO.
JACKSON, MICH.

PRESSURIZER LEVEL CONTROL & CHARGING PUMP SPEED CONTROL

SCHEME IL11

C.E. REFERENCE DWG. No. 2966-D-3119 & D-3153 & FOXBORO INST. DWG. (FP-5935-NSSS-336, 221 & 1203)

| SCALE NONE | DESIGNED | DRAWN C.Y.R. |
|---|---|---|

**BECHTEL COMPANY**

**PALISADES PLANT**
**CONSUMERS POWER COMPANY**

SCHEMATIC DIAGRAM
PRESSURIZER LEVEL CONTROL
INSTRUMENTATION

| JOB No. | DRAWING No. | REV. |
|---|---|---|
| 5935 | E-82 SH. 2 of 4 | 8 |

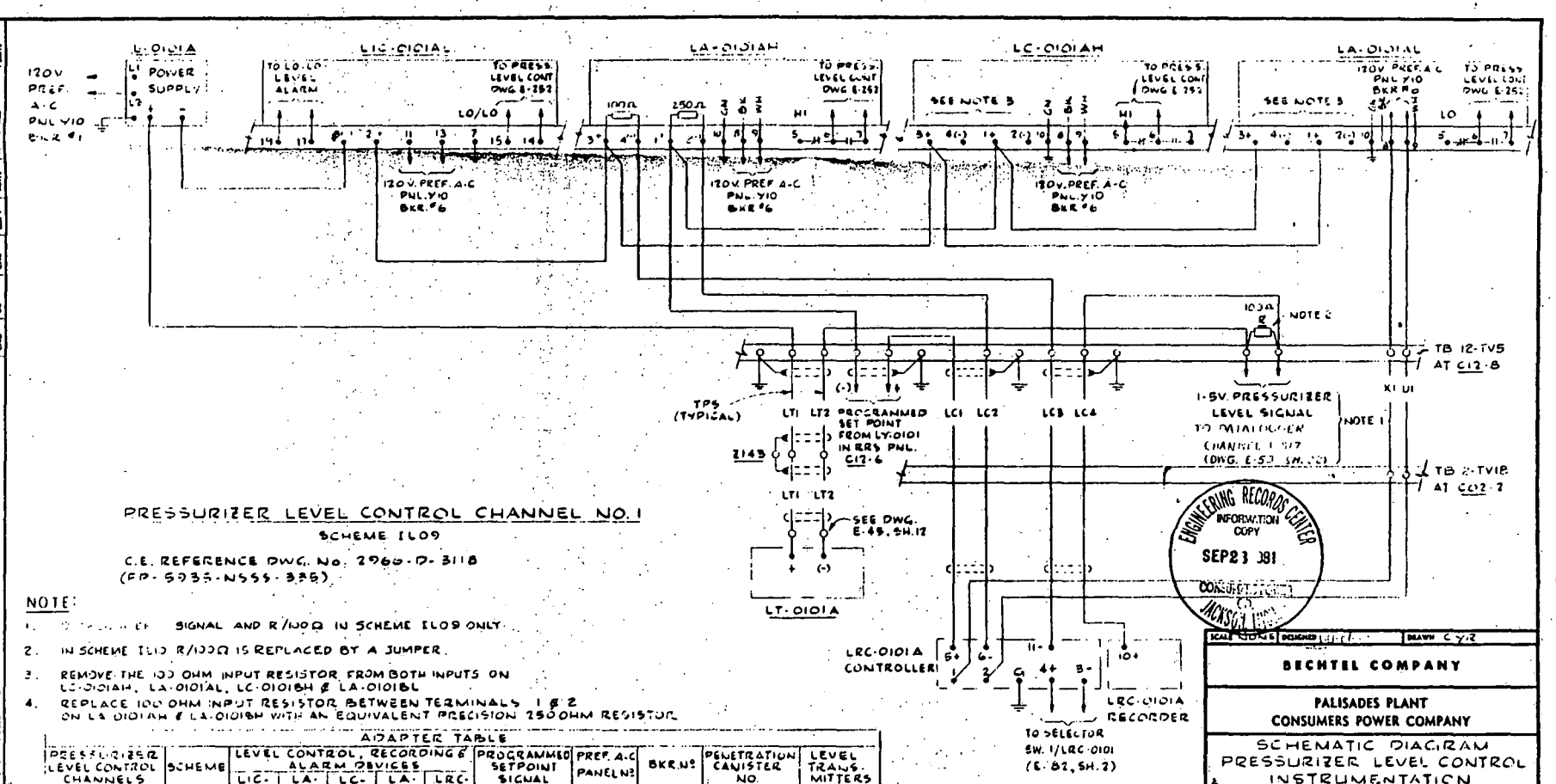


## PRESSURIZER LEVEL CONTROL CHANNEL NO. 1

SCHEME ILO9

C.E. REFERENCE DWG. No. 2960-D-3118
(FP-5935-N555-335)

NOTE:

1. [illegible] SIGNAL AND R/100Ω IN SCHEME ILO9 ONLY.
2. IN SCHEME ILIO R/100Ω IS REPLACED BY A JUMPER.
3. REMOVE THE 100 OHM INPUT RESISTOR FROM BOTH INPUTS ON LC-0101AH, LA-0101AL, LC-0101BH & LA-0101BL
4. REPLACE 100 OHM INPUT RESISTOR BETWEEN TERMINALS 1 & 2 ON LA 0101AH & LA-0101BH WITH AN EQUIVALENT PRECISION 250 OHM RESISTOR

ADAPTER TABLE

| PRESSURIZER LEVEL CONTROL CHANNELS | SCHEME | LEVEL CONTROL, RECORDING & ALARM DEVICES | | | | | PROGRAMMED SETPOINT SIGNAL | PREF. A-C PANEL Nº | BKR. Nº | PENETRATION CANISTER NO. | LEVEL TRANS-MITTERS |
|---|---|---|---|---|---|---|---|---|---|---|---|
| | | LIC- | LA- | LC- | LA- | LRC- | | | | | |
| CHANNEL NO. 1 | ILO9 | 0101AL | 0101AH | 0101AH | 0101AL | 0101A | LY-0101A | Y10 | 6 | Z143 | LT-0101A |
| CHANNEL NO. 2 | ILIO | 0101BL | 0101BH | 0101BH | 0101BL | 0101B | LY-0101B | Y20 | 6 | Z245 | LT-0101B |

BECHTEL COMPANY

PALISADES PLANT
CONSUMERS POWER COMPANY

SCHEMATIC DIAGRAM
PRESSURIZER LEVEL CONTROL
INSTRUMENTATION

| JOB No. | DRAWING No. | REV. |
|---|---|---|
| 5935 | E-82, SH. 1 of 4 | 10 |