Consumers Power Company

General Offices: 212 West Michigan Avenue, Jackson, Michigan 49201 • (517) 788-0550

March 27, 1981

Director, Nuclear Reactor Regulation
Att Mr Dennis M Crutchfield, Chief
Operating Reactors Branch No 5
US Nuclear Regulatory Commission
Washington, DC 20555

DOCKET 50-255 - LICENSE DPR-20 -
PALISADES PLANT - SEP TOPICS III-6
AND III-11 - SEISMIC REVIEW

By letter of January 19, 1981, the NRC transmitted NUREG/CR-1833, Seismic Review of the Palisades Nuclear Power Plant Unit 1, and requested that Consumers Power Company take the following actions:

1. Review the report for consistency with our as built facility.
2. Submit the information requested in Enclosure 2 or a schedule for completion of analysis required to respond to Enclosure 2.

Since the report covers a large amount of diverse material, our detailed review will take some time. Preliminary comments based on a quick general review are listed in Attachment 1. We propose to pursue the detailed review in parallel with our efforts to deal with the items in Enclosure 2 of your letter. This will result in a target date of August 1981 for final comments. Should it become apparent during the review that a significant discrepancy exists we will contact the staff for guidance as soon as possible after discovery of any such major discrepancy.

The items listed in Enclosure 2 of your letter are addressed in Attachment 2. The schedules in Attachment 2 reflect the probable necessity to contact individual equipment manufacturers for qualification status, qualification data or additional data on the equipment from which independent qualification calculations can be carried out. The schedules reflect past experience on the time required to obtain similar data from typical vendors.

Robert A Vincent

Robert A Vincent
Staff Engineer

A035
S
1/1

CC JGKeppler, USNRC
NRC Resident Inspector-Palisades

Attachment (10 pages)

8103310406

ATTACHMENT 1

General comments on NUREG/CR-1833 "Seismic Review of the Palisades Nuclear Power Plant Unit 1 as part of the Systematic Evaluation Program". Manuscript completed December 15, 1980.

1. The revision to Appendix A to the FSAR which was submitted to NRC on October 14, 1980, has not been incorporated. This change is referenced parenthetically on Page 17. We understand that NRC will incorporate this change in the next revision.

2. Information transmitted in the site meeting on November 17, 18 and 19, 1980 and the December transmittals resulting from the November meeting have not been incorporated. We understand that the December 15, 1980 manuscript date precluded incorporation. However, this material should be considered in the next revision.

3. Chapter 6 expounds at some length on anchorage and anchor bolt stress. The NRC mandated "Anchorage and Support of Electrical Equipment Program" was initiated as a result of the plant visits by the Senior Seismic Review Team. In this program we reviewed the electrical equipment anchorages in some detail using a conservative "Peak of the Floor Response Spectra" criteria. As a result of this review the anchorages of all of the electrical equipment discussed in Chapter 6 have been, or will by the end of the next refueling outage be, revised and strengthened. The anchorage discussions as presently written are, therefore, no longer applicable.

4. The report utilizes a rather broad range of soil parameters. The general approach seems to be to adopt text book derived soil constants and then to vary them over a broad range ($\pm$50%). The reviewers justification is the lack of soils information on the Palisades site. In response to requests made during the "ology" site visit we transmitted to J. Wetmore on September 9, 1979 some five separate reports relating to soils information at the site. It is not clear that this information was made available to the reviewer.

   When computing floor response spectra upper, median, and lower bound spectra were generated for the range of soil constants and were broadened. The floor response spectra applied to the equipment are the envelope of all three cases. As stated on Page 95 this results in increases of a factor of between 3 and 5 in the seismic forces acting on flexible equipment with frequencies below 4Hz. These increases are almost exclusively the result of the assumed $\pm$50% range in the soil parameters. This may be the cause of the observed descrepancies between our calculations and the NRC reviewer's. Should this be the case additional review of soil information to narrow the range of input parameters may be desirable.

5. On Page 9 the report states that modifications to the anchor bolting of T-81 will be required if this tank is confirmed to be essential for safety. Seismic design was not specified for this tank. It is our position that this tank is not required. Sufficient water is stored

in T-2, the condensate storage tank, to allow time to transfer auxiliary feedwater to an alternate source (eg. the fire pumps) should T-81 fail as the result of an earthquake.

6. Section 2.3 contains suggestions for further consideration related to piping. We request that these concerns be discussed during the meeting requested under Item 5 in Attachment 2.

7. Under concluding remarks on Pages 12 and 13 NRC's consultant makes recommendations for further action including plant modifications. We believe that recommendations relating to modifications may be premature and suggest that additional discussions and perhaps additional analysis be considered before NRC makes a decision on the consultant's recommendation to modify the plant.

8. We note that NUREG-CR/1582 and the efforts associated with the Lawrence Livermore/Tera Uniform Hazard Site Specific Spectra Project produced a spectrum for Palisades that is different from the one used here to evaluate the plant. It is not clear at this point how the two NRC efforts fit together. It would appear that any difference between the two spectra may be available margin which could be useful in resolving some of the equipment related issues.

9. We have contracted with Weston Geophysical to generate, by more conventional techniques, a site specific spectra for Palisades. This effort handles the Palisades soil site problem in a slightly different manner. By selectively incorporating records from sites layered similarly to Palisades the problem is addressed empirically. In addition Weston has retained Dr. Erik Vanmarcke and Dr. Eduardo Kausel of M.I.T. to perform analytical soil amplification studies for the Palisades site. We would like to hold detailed comment on soil amplification effects until the results of this effort become available, particularly since the reviewer references Dr. Kausel's work.

ATTACHMENT 2

Response to Enclosure 2 of NRC letter of January 19, 1981.

1. Service Water Pumps

   (1) Discharge head material is steel. The drawing attached to 12/4/80 submittal shows this. A phone call to the vendor verified that it was steel and definitely not cast iron. This portion is therefore assumed to be resolved.

   (2) Evaluate functional adequacy of the pump. The pump manufacturer will be contacted to determine whether an identical or similar pump has been qualified by test or analysis to Palisades SSE seismic levels. If such information is available a similarity analysis will be performed and the results will be submitted. If previous seismic qualification data does not exist detailed design information will be obtained from the vendor and a consultant will perform mechanical calculations to evaluate the functional adequacy of the pump in terms of motor impeller shaft deformations and bearing and impeller clearances as suggested on pages 97 and 106 of the NUREG (CR 1833). The total chain of events outlined above is expected to take about 6 months.

2. Auxiliary Feedwater Pump - Evaluate Functional Adequacy

   These pumps which were purchased from Bingham (The Elliot turbine for the turbine driven pump was supplied by Bingham with the pump rather than Elliot furnishing a Bingham pump with the turbine as might be inferred from the NUREG) will be treated using the same procedure as listed for the service water pump in 1.(1) above. The schedule is also expected to be essentially the same. Due to a greater participation of Bingham in the nuclear industry, however, there is a higher probability that the vendor has already qualified the same or a similar pump.

3. Diesel Generator Fuel Oil Tank (Day Tank) - Provide Information on Seismic Design

   The NUREG on page 99 indicated that the "Anchor-Bolt System for Flexible In-Structure Flat-Bottom Tanks may be overstressed if tank and fluid contents were assumed rigid in the original analysis". The supports for this tank were modified as a result of the equipment anchorage project triggered by NRC's January 1, 1980 letter. The new supports are shown on the attached drawing. They provide four point support off the reinforced concrete walls using heavy (7/16 inch thick) angle iron and 36 three-quarter inch anchor bolts which are rated at 2,400 lbs. each. The new anchorage is designed to resist a 1.6 g horizontal force (peak of the floor response) on the full tank while ignoring any restraint available

from the original anchorage system. Although no dynamic analysis was performed, the anchorage in its new configuration is unquestionably rigid. The basic concern in the NUREG has been taken care of by this modification. Since the contents of the tank (fuel oil) are clearly nonrigid, a sloshing and hydrostatic analysis will be performed to demonstrate that the tank walls will not buckle. Due to lack of a detailed drawing of the tank this is expected to take from 3 to 6 months.

4. Safety Injection Tank - Provide Information to Demonstrate Structural Integrity of the Tank and its Support

   A detailed analysis of the tank support system by our consultant is in progress. The tank analysis will be handled in an iterative manner with the support analysis. It is anticipated that the analysis will be available in June 1981.

5. Motor-Operated Valves - It is presently questionable that the analysis reviewed by NRC was for the "As-Built" condition. More information is needed.

   Our piping and pipe support work associated with IE Bulletin 79-14 was carried out during the term of the SEP Seismic Review. As a result of this review pipe support changes were made. Several volumious packages were supplied for NRC review at various points in time. Since the "As-Built" condition was actually changing during the SEP Review some confusion may have occured. We further observe that Section 2 of the NUREG (pages 11, 12 and 13) recommends further considerations be given to certain aspects of piping analysis. Section 6.3.1.10 on page 113 of the NUREG recommends that total stresses at motor-operated valve locations be calculated.

   Our piping analysis performed for IEB 79-14 did consider valve operators as eccentric masses. It was our intention in performing the piping reanalysis for IEB 79-14 that the analysis would answer all open questions on Palisades piping including those raised by SEP Review.

We propose to hold a meeting with NRC to resolve piping related issues which we presently believe are:

a. As-Built Configuration

   1) Assure NRC understands which of our analyses are the "Final" analyses.

   2) Compare any models used by NRC with piping and support measurements taken in the field during 79-14 efforts which we believe accurately represent the "As-Built" configuration as it presently exists.

b. Loading and Load Combinations

1) Compare seismic loadings (g-forces and directions) used in our analysis with those used by NRC for SEP review.

2) Compare load combinations imposed in our analysis (FSAR Appendix A, October 24, 1980 Revision) with those used by NRC (ASME Section III) to determine total stresses at motor operated valve locations.

3) Review load combination techniques used in our analysis (Modal, Directional, etc.) with those used in NRC review.

c. Pipe Modeling Techniques

1) Review our method of modeling valves (establish to NRC's satisfaction that they were modeled as eccentric masses).

2) Review pipe supports and support stiffnesses used by NRC in their review to establish that they reflect the best information currently available.

3) Cover any questions on either side regarding nodalization and pipe masses used in the calculations.

d. Nozzle and Anchor Loads

1) Review in more detail NRC's comments on nozzle and anchor loads mentioned on pages 11 and 12 and elsewhere in the NUREG.

2) Review current status of these subjects in our 79-14 effort.

3) Determine what action, if any, is required to resolve comments on this subject in the NUREG.

e. Reconcile any difference discovered above and determine what additional action, if any, is required to complete SEP piping reviews.

6. Control Rod Drive Mechanism - Provide more information to evaluate functional adequacy.

Due to the large size of the required test structure no testing was performed to verify active function of a CRDM during a seismic event. Tests were performed demonstrating active function with deliberate

misalignment of the control rod channel relative to the CRDM center line. We propose to calculate the seismic g-loading that would represent the tested misalignment. If this g-level envelopes the reviewer's calculated g-level, function will be considered to have been demonstrated. Failing this, a more detailed mechanical calculation will be performed taking credit for some of the many subtle design features designed into the mechanism, the upper guide structures, fuel and control rod blades to insure function in the face of unforseen forces beyond those actually applied as design loads.

The first portion (calculate g-forces corresponding to the misalignment test) is expected to take about 3 months. If additional calculations are required they will extend beyond this.

7. Steam Generator

8. Reactor Coolant Pump

9. Reactor Vessel Supports and Internals

Items 7, 8 and 9 all require additional information to verify design adequacy. On pages 116, 117 and 118 of the NUREG the comment, common to all three, is that "A comparison of seismic and pipe rupture design loads and a comparison of allowable forces and stresses for various load combinations was not provided".

We continue to believe that, even with the higher g-levels thought applicable by the reviewer, pipe rupture loads largely govern the design of these components. The tables in the NUREG seem also to support this contention.

The material required to resolve the reviewers comment is contained in the stress reports referenced in the NUREG. However, the material available to the reviewer was submitted in response to certain specific questions. Due to the large volume of the reports only those portions relating to the question asked were copied. In most cases, the sections required to resolve the above specific comment were not available to the reviewer because the subject concern was not covered in the original question.

To resolve the issue we propose to have the equipment supplier (who performed the original analysis and wrote the stress reports) update his analysis using the reviewer's seismic input and retaining the same methodology used in the original analysis (static-g). By this method the new seismic levels would be factored into the original load combination criteria and the original allowable stress limits. It is expected that this effort would take approximately 3 months.

10. Battery Racks - Wooden lateral bracing should be strengthened.

The batteries and racks are scheduled for replacement during the next refueling outage. The new racks will have more substantial bracing in front of the cells.

Low impedence testing of the existing racks confirms the rigidity of the racks (lowest frequency 57Hz) assumed in the NUREG. The resulting low acceleration, the aspect ratio of the cells, the existence of high friction rubber on the rack surface and the plastic cell spacers will minimize the force applied to the wooden rail in question in the unlikely event that an earthquake occurs before the racks can be replaced.

11. Motor Control Centers

12. Switchgear

13. Control Room Electrical Panels

14. Transformers

Items 11, 12, 13 and 14 all require additional information to verify functionality and in some cases structural adequacy.

All of the above equipment was included in the seismic anchorage effort initiated by NRC's January 1, 1980 letter. The anchorages have all been improved by tying down to a "Peak of the Response Spectra" criteria. These modifications result in the discussions of tie down bolting in the NUREG being no longer applicable. The new anchorages include additional bolting at the equipment base and tie back to adjacent walls wherever practical. The resulting anchorage is rigid or nearly rigid which makes the original "Peak of the Response Spectrum" assumption highly conservative and assures the lowest possible seismic excitation of the equipment.

The SEP Owners Group has, for some considerable period of time, been considering the problem of qualification of existing electrical equipment to resist seismic forces and remain functional. These items will be evaluated in conjunction with the Owners Group's "Seismic Operability" program. A meeting presenting the proposed program was held on March 5, 1981. The meeting included a discussion of anticipated schedules which will extend to at least the end of 1981 and perhaps beyond.

Until this more formal method of qualification can be designed and carried out we present the following in support of continued operation:

a. In the course of reviewing the equipment anchorages our consultant informally looked into some of the more obvious questions related to operability. Although this was not an exhaustive review, their opinion, based on their experience, was that the equipment with its new anchorages will survive an earthquake of the size of the Palisades SSE and will remain functional after the earthquake.

b. Actual observed earthquake experience is that well anchored equipment of the type used at Palisades will not be damaged by an earthquake of the size of Palisades safe shutdown earthquake and will function normally afterward.

c. Broad band shock tests performed on similar equipment by the Department of Defense also suggest that the equipment will remain functional at SSE seismic levels.

d. More recent tests by certain equipment manufacturers has qualified similar equipment for much higher level earthquakes without significant modification.

e. Earthquakes are very uncommon in Michigan and the probability of a damaging earthquake occuring in the vicinity of Palisades within the next year is very low. The cost of further expediting the program is not justifiable in light of presently known experience with this type of equipment.

15. Electrical Cable Raceways

The cable trays and support system at Palisades were inspected as a part of the equipment anchorage program. Additional inspection and characterization was performed as a part of the SEP Owners Group's Cable Tray Qualification Project. Bechtel Corporation has performed seismic testing of typical raceway systems under sponsorship of another group of utilities. Inspection of the Palisades cable trays has shown that they are strut hung and are generally similar to those used in the Bechtel testing. These tests used seismic input which is expected to envelope Palisades seismic input. The results of the tests show that the cable trays remain functional. Damping of up to 20% was observed. The high damping controls amplification of seismic motion by the raceway system.

Additional cyclic load/deflection testing of tray support hardware used at Palisades will be performed as a part of the SEP Owners Group Cable Tray Program. This will confirm the similarity of the Palisades support hardware to that tested in the Bechtel effort and will verify that Palisades hardware can withstand the cyclic deflection expected at Palisades.

In the equipment anchorage project selected "worst case" tray configurations were analyzed using simplified conservative methods. The wall-braced frame and wall cantilevered systems were found to be acceptable. The trapeze-hanger frame type could not be verified by these techniques since deflections predicted are greater than the presently available cyclic load test data.

A report on current progress of the Owners Group cable tray effort was provided during the March 5, 1981 meeting. Final completion of the program including application to individual plants is expected to take at least a year.

ITEM	QUAN.	DESCRIPTION
1	4	L 5 x 3 x 7/16 x 5'-4"
2	36	3/4"φ BOLTS

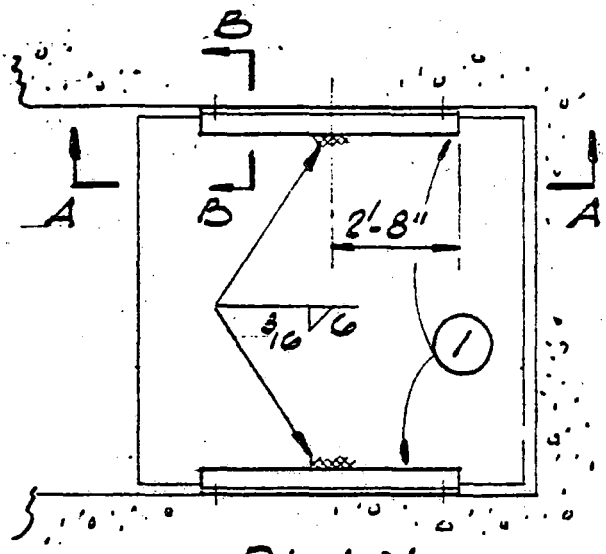

PLAN

SCALE: 1/4" = 1'-0"

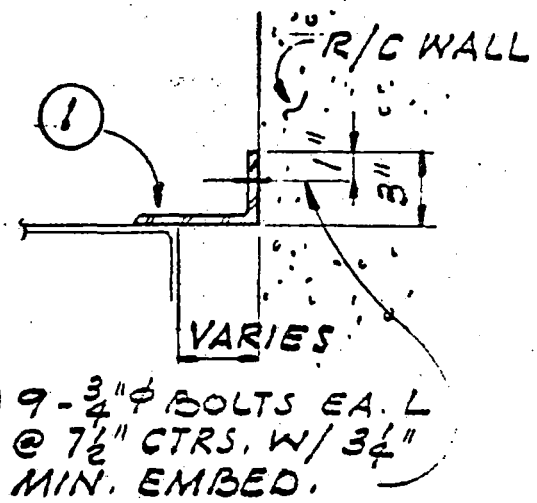

SECTION B-B

SCALE: 1 1/2" = 1'-0"

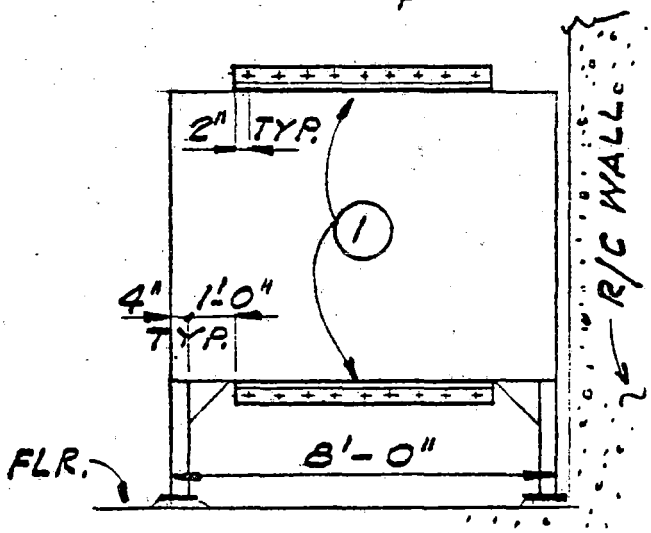

SECTION A-A

SCALE: 1/4" = 1'-0"

NOTE:

CONSTRUCTION WILL DRAIN TANKS, FLUSH WITH AN EMULSIFIER AGENT AND COVER WITH AN INERT BLANKET OF N_2

REV	DATE	BY	CHK	APRV	DESCRIPTION
1	7-30-80	LO	RMC	RMG	REVISE TITLE AND NOTE
0	6-20-80	LO	RMC	RMG	INITIAL RELEASE

PALISADES NUCLEAR POWER PLANT AUXILIARY BUILDING	URS/JOHN A. BLUME & ASSOCIATES SAN FRANCISCO, CA.			
FUEL OIL DAY TANK T25A & T25B	JOB NO. 8013	DWG NO. 10	SHT 1/1	REV 1