Pennsylvania Power & Light Company
Two North Ninth Street • Allentown, PA 18101 • 215/770-5151

Harold W. Keiser
Senior Vice President-Nuclear
215/770-4194

APR 28 1989

Director of Nuclear Reactor Regulation
Attention: Dr. W.R. Butler, Project Director
Project Directorate I-2
Division of Reactor Projects
U.S. Nuclear Regulatory Commission
Washington, D.C. 20555

SUSQUEHANNA STEAM ELECTRIC STATION
REQUEST FOR ADDITIONAL INFORMATION -
FIRE PROTECTION REVIEW
PLA-3192 FILES R41-2/A17-15

Docket Nos. 50-387
and 50-388

Dear Dr. Butler:

This letter responds to a request for additional information regarding the SSES Fire Protection Review Report (letter dated March 22, 1989: Mohan C. Thadani to Harold W. Keiser).

Question No. 1

The submittal of November 22, 1988 stated that Susquehanna did not have written procedures for clearing of faults associated with multiple high impedance faults. NRC staff guidance specifically identifies that either an analysis be performed which demonstrates that high impedance faults will not affect plant shutdown or that procedures be instituted for clearing such faults. Based on this, either provide such analysis or written procedures.

Response

PP&L is in the process of preparing for an analysis of the circuits which have the potential for being impacted by a fire which could result in multiple high impedance faults on safe shutdown buses. It is projected that this analysis will be completed during the last quarter of 1989. The analysis is expected to demonstrate that, in general, high impedance faults will not affect plant shutdown. It is possible, however, that modifications or operating procedures will be used to resolve some specific problems with multiple impedance faults. A schedule for any modifications or development of the operating procedures to clear such faults will be developed when the analysis is completed.

A006
1/1

Question No. 2

Staff guidance identifies that suppression pool temperature indication is part of the minimum monitoring capability for BWRs for achieving safe shutdown. Discussions provided in the request for deviation from this requirement submitted by the Licensee, do not adequately justify the lack of need for this indication nor that alternate means are available for the operators for ensuring that the suppression pool temperature is being maintained within the allowable range. In addition, procedure EO-100-009 "Plant Shutdown From Outside Control Room" does not adequately address the possibility of loss of temperature indication and subsequent alternate means of monitoring temperature.

Provide additional justification for the lack of suppression pool temperature indication and provide a proposed revision to procedure EO-100-009 which adequately addresses this possibility. The justification should include a discussion of how stable hot shutdown can be achieved and monitored with no temperature indication and what indicators would be used to ensure that a stable condition is maintained. Further, the justification should identify the indication used to achieve and monitor cold shutdown within 72 hours.

Response

Cold shutdown is based on the temperature of reactor coolant not suppression pool temperature. Therefore, monitoring suppression pool temperature is not critical to achieving cold shutdown.

Suppression pool temperature indication is not isolated from the main control room. Based upon the system function and the SSES Emergency Operating Procedures, there exists no safety consequences relative to a fire in the control room for this lack of isolation. Emergency Operating Procedure EO-100-009 is specific enough to ensure proper system alignment of RHR and RHRSW along with proper flow indication for both the RHR and RHRSW systems so that suppression pool cooling is assured. A detailed explanation supporting our position follows:

Functional Description:

Before discussing the governing emergency procedures, a short description of the function of the SPOTMOS indication system, the suppression pool, the RHR heat exchanger and the spray pond as utilized in the suppression pool cooling mode is provided. Please refer to Figure 1, a simplified diagram of the suppression pool cooling flowpath for RHR Loop A.

On the Remote Shutdown Panel (RSP), SPOTMOS is provided as one of many parameters available to the operator to monitor plant status. The operator also has indication of suppression chamber air temperature and drywell air pressure as well as suppression pool level.

The suppression pool cooling path utilizes a RHR pump which takes a suction from the suppression pool through the F004 valve, enters the RHR heat exchanger through the F047 valve, flows through the Hx shell and

exits through the F003 valve. The flow path continues through the F028 valve and through the F024 valve back to the suppression pool.

The RHRSW system takes a suction from the spray pond, then enters the RHR heat exchanger, flows through the heat exchanger tubes and exits and returns to the spray pond through the spray network risers.

Operator Actions:

Operator actions in the event of a fire which would result in the evacuation of the control room are governed by EO-100-009 (Attachment II), Plant Shutdown From Outside Control Room.

In Step 4.2 of EO-100-009, the operator is instructed to establish and/or maintain reactor level greater than +18" by performing Section 4.6 which pertains to RCIC operation.

The operator has been thoroughly trained to realize that RCIC is a steam driven system that dumps steam to the suppression pool when running. He also has on the RSP a switch for valve HV-149-F059, turbine exhaust to the suppression pool, the position of which must be confirmed prior to turbine operation. Therefore, when RCIC is in operation, the operator is well aware that steam is being dumped to the suppression pool from the RCIC turbine exhaust.

Also in Step 4.2 of EO-100-009, the operator is instructed to establish and maintain reactor pressure less than 1000 psig by performing Section 4.7 reactor pressure control. Again the operator has been thoroughly trained to realize that the safety relief valves, which he controls from either the Remote Shutdown Panel itself or from keylock switches in the relay rooms, depressurize the reactor vessel by dumping steam to the suppression pool.

Lastly in Step 4.2 of EO-100-009, the operator is instructed to maintain Suppression Pool temperature less than 90°F by performing Section 4.8, Suppression Pool Cooling. It should be understood that the Suppression Pool Cooling system is not controlled by looking at the SPOTMOS indication and throttling valves or adjusting pump speed to change the suppression pool temperature. Instead, it is a system that is started and run, and left running. It is placed in service as explained in Section 4.8.3. Step (a) of Section 4.8.3 instructs the operator to place ESW in service if not already in service. This is to cool the RHR pump which he will soon be starting. He may have already started ESW to cool the RCIC room with the RCIC room cooler. Step (b) of Section 4.8.3 instructs him to place the RHRSW system in service. Step (b)(5) of Section 4.8.3 specifically instructs him to open HV-11210B until flow on FI-11207B (located on the Remote Shutdown Panel) reaches 9000 gpm. This flow rate is established for suppression pool cooling in general and not specifically because control is from the Remote Shutdown Panel. Step (c) of Section 4.8.3 instructs the operator to place the RHR system in service. Step (f) of Section 4.8.3 specifically instructs him to throttle test line valve HV-1510F024B to 10,000 gpm. Again this flow rate is established for suppression pool cooling in general and not specifically because control is from the Remote Shutdown Panel.

Step (i) of Section 4.8.3. instructs the operator to monitor suppression pool water temperature on the Remote Shutdown Panel. It should be especially noted that there is no instruction to control suppression pool cooling by observing the SPOTMOS indications. Quite the contrary, the system is started, proper flows are established and it is left to run until the reactor is depressurized to 98 psig which corresponds to a reactor coolant temperature of approximately 340°F.

Therefore, we conclude that Section 4.8.3 of EO-100-009 is specific enough to ensure proper system alignment of RHR and RHRSW along with proper flow indication for both the RHR and RHRSW systems so that suppression pool cooling is assured.

It should be noted that Section 4.11 addresses cooldown. It instructs the operator to depressurize the RPV at less than 100°F/HR cooldown, utilizing PSV-141-F013A,B,C in sequential order to prevent exceeding local heat loading of the suppression pool and/or using RCIC in accordance with Section 4.6 of EO-100-009. Attachment A and B to EO-100-009 are used to determine the cooldown rate. This rate is determined by observing reactor coolant pressure and determining the corresponding saturation temperature on Attachment A (this attachment was created from standard steam tables). SPOTMOS temperatures are not used in determining cooldown to cold shutdown.

In Section 4.11.4 of EO-100-009, the operator is instructed to place the RHR system in the Shutdown Cooling Mode when reactor pressure is less than 98 psig. The 98 psig corresponds to a reactor coolant temperature of approximately 340°F (see Attachment A of EO-100-009). Thus, we have not reached cold shutdown at this point in time.

At this time, after the RHR shutdown cooling mode has been established, the suppression pool is no longer cooled because it is not being utilized as a heat sink since RCIC has been tripped and safety relief valves no longer have to be opened to depressurize at 100°F/HR. In shutdown cooling, the RHR system is realigned so that reactor coolant is flowing through the RHR heat exchanger shell side while RHR SW continues to flow through the tube side. The shutdown cooling mode is continued until cold shutdown is reached. Again (see 4.11.4n) the operator uses Attachment A to determine the cooldown rate to cold shutdown. Cold shutdown is established when RPV pressure is 0 psig.

Based on the above discussion, we firmly believe the procedure, as written, is adequate to address the loss of SPOTMOS indication should it occur.

This concludes our response to your questions. Should be have further questions or require clarification please call us.

Very truly yours,

H. W. Keiser

Attachment I: Figure 1, A Simplified Diagram of the Suppression Pool Cooling Flowpath for RHR Loop A

Attachment II: EO-100-009, Plant Shutdown From Outside Control Room

cc: NRC Document Control Desk (original)
NRC Region I
Mr. G. S. Barber, NRC Resident Inspector-SSES
Mr. M. C. Thadani, NRC Project Manager

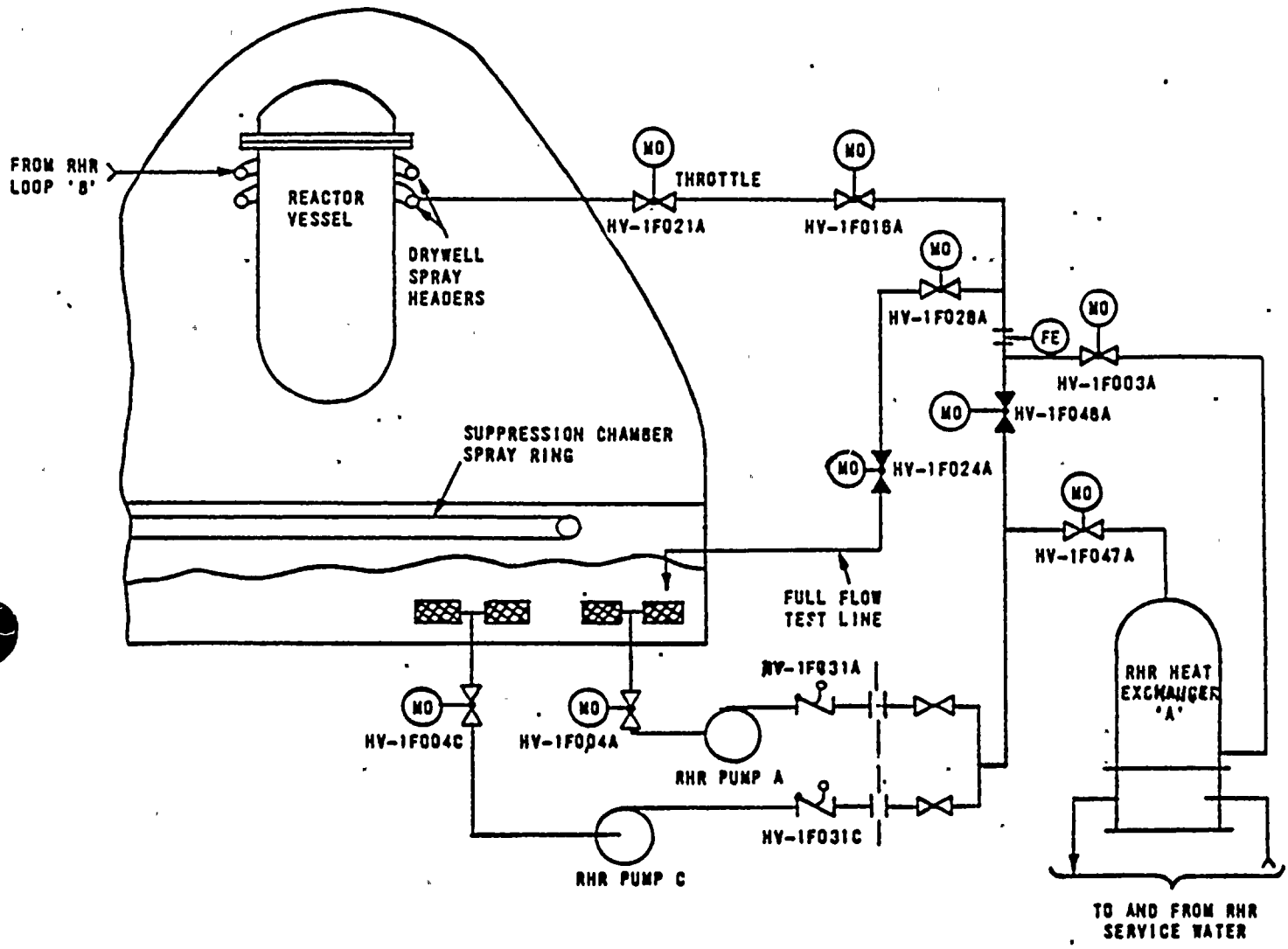

Figure 1: A Simplified Diagram of the Suppression Pool Cooling Flowpath for RHR Loop A.

ATTACHMENT II: PROCEDURE EO-100-009

PLANT SHUTDOWN FROM OUTSIDE CONTROL ROOM