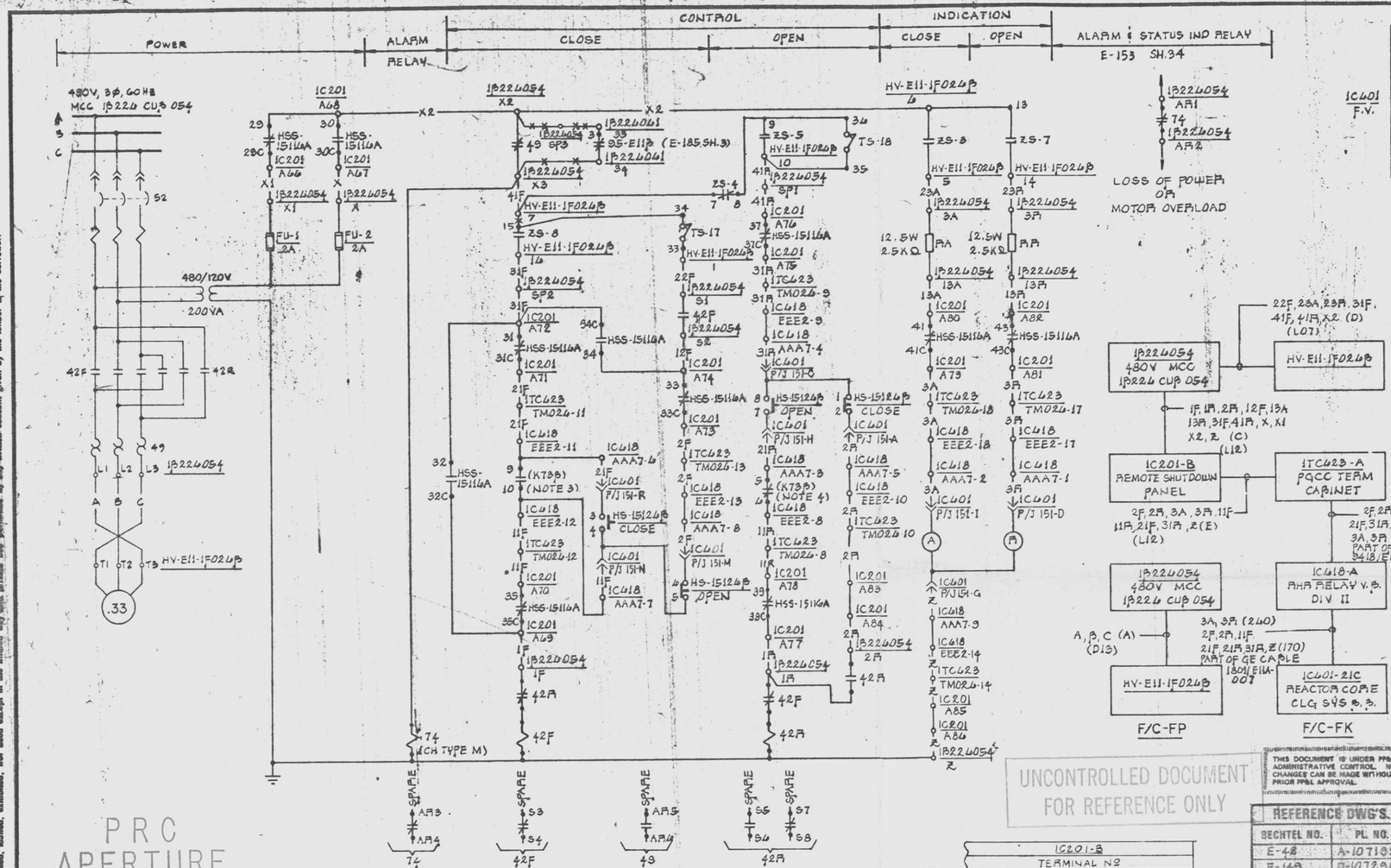

BLOCK No.	CONTACT No.		POSITION CLOSE	AUTO	OPEN	DRAW. No.
TOP	1 2 3 4	F		X	X	THIS SH
		B	X			
BTM	5 6 7 8	F	X	X		
		B			X	

CONTROL SWITCH: HS-15124B & HS-15111B
GENERAL ELECTRIC TYPE CR2940
SPRING RETURN TO AUTO

VALVE LIMIT SWITCH DEVELOPMENT

CONTACTS	100% OPEN	INTERMEDIATE	100% CLOSED	CONTACT USED
ZS-1	1-11-02			SPARE
ZS-2	3-11-04			
ZS-3	5-11-06			THIS SH
ZS-4	7-11-08			
ZS-5	9-11-010			
ZS-6	11-11-012			SPARE
ZS-7	13-11-014			THIS SH
ZS-8	15-11-016			
ZS-9	17-11-018			SPARE
ZS-10	19-11-020			
ZS-11	21-11-022			
ZS-12	23-11-024			
ZS-13	25-11-026			
ZS-14	27-11-028			
ZS-15	29-11-030			
ZS-16	31-11-032			
TS-17	33-0-34	OPEN ON HIGH CLOSING TORQUE		THIS SH
TS-18	35-0-36	OPEN ON HIGH OPENING TORQUE		

CONTACT CLOSED

HV-E11-1F024B & HV-E11-1F011B

NOTES:

1. FOR STANDARD SYMBOLS FOR ELECTRICAL DIAGRAMS SEE DWG E-42.
2. ALL DEVICE NOS TO BE SUFFIXED BY STARTER LOCATION NO. UNLESS NOTED OTHERWISE.
3. CONTACT CLOSES ON HI DRYWELL PRESS OR REAC LOW LEVEL.
4. CONTACT OPENS ON HI DRYWELL PRESS OR REAC LOW LEVEL.
5. NOS. IN PARENTHESIS ARE GE DEVICE NOS.
6. DESIGN BASED ON GE/APED ELEMENTARY 791E418WJ (V/P 8856-MI-E11-66).
7. FOR CONTACT DEVELOPMENT OF REMOTE SHUTDOWN PANEL (1C201) SWITCHES SEE DWG E-149, SH 2.

UNCONTROLLED DOCUMENT FOR REFERENCE ONLY

THIS DOCUMENT IS UNDER PP&L ADMINISTRATIVE CONTROL. NO CHANGES CAN BE MADE WITHOUT PRIOR PP&L APPROVAL.

REFERENCE DWG'S.	
BECHTEL NO.	PL. NO.
E-48	A-107181
E-149	D-107298
E-185	D-107334
8856-MI-E11-66	FF-124510

3	9/17/92	ISSUED "AS BUILT"				
2	3/1/82	REV TO INCORP FCR E-184 & 45 INCORP DCN #1 (DER 008 & QAR-F-640)				
1	4/14/77	ADDED TERMINAL NOS AND REVISED AS SHOWN				
0	10/6/77	ISSUED FOR CONSTRUCTION. SCHEME REVISED & MOVED FROM DWG E 153 SH 2.2				
No.	DATE	REVISIONS	BY	CHKD	DESIGN SUPV	CHIEF ENGR

SCALE — DESIGNED W.S.CZEPANSKI — DRAWN M.SANTOS

PENNSYLVANIA POWER & LIGHT COMPANY
ALLENTOWN, PENNSYLVANIA
SUSQUEHANNA STEAM ELECTRIC STATION - UNIT 1, UNIT 2

BECHTEL – SAN FRANCISCO

SCHEMATIC DIAGRAM
RHR HEAT EXCHANGER DRAIN VALVES
UNIT 1

JOB No.	DRAWING No.	REV.
8856	E 153 SH.92	3

D-107302 SH92

22 x 34 "D" SIZE

DIV NO.	SCHEME NO.	VALVE NO.	VALVE DESCRIPTION	HP	FACILITY CODE	STARTER LOCATION	CONTROL SWITCH NO.	CONTROL SWITCH LOCATION	INTERLOCK AUX RELAY	85 RELAY	1C601-21C
II	1Q3027	HV-E11-1F024B	HX COND FLOW TO RCIC F024B	.33	FP/FK	1B226054	HS-15124B	1C601-21C	5 K73B 6 ; 9 K73B 10	85-E11B/3	1B226061 33,34 E-185 SH.3
II	1Q3029	HV-E11-1F011B	HX B DRN FLOW SUPP POOL F011B	.33	FP/FK	1B226044	HSS-15111B	1C601-21C	7 K73B 8 ; 11 K73B 12	85-E11A/7	1B226061 15,16 E-185 SH.3

1C601-21C PIN NO										1C201-B TERMINAL NO										
P/J	H	C	A	R	N	M	G	D	I	A 66	A 67	A 68	A 69	A 70	A 71	A 72	A 73	A 74	A 75
151	F	W	V	U	L	K	(A)		Z	H 29	H 31	H 30	H 36	H 37	H 32	H 33	H 34	H 35	H 38
263								(A)											

TERMINATION LOC	TERMINAL NOS					LOC	TERMINAL NOS								GB CABLE (LINE CODE)		1C201-B TRF SW	CONTACT NUMBER			
1TC623A	TM026-8 ↓ -9	TM026-10 ↓ -11	TM026-12 ↓ -13	TM026-14 TM026-17	TM026-18	1C618-A	EEE2-8 ↓ -9 -10	EEE2-11 ↓ -12 -13	EEE2-14 ↓ -17 -18	AAA7-3 ↓ -4 -5	AAA7-4 ↓ -7 -8	AAA7-5 ↓ -1 -2			1801/E11A-007(170) (260)	9418/E11A-007 (171) (256)	HSS-15116A	29-29C 30-30C	31-31C 32-32C	33-33C 34-34C	35-35C 37-37C	39-39C 41-41C 43-43C
1TC623A	TM025-1 ↓ -2	TM025-3 ↓ -4	TM025-5 ↓ -6	TM025-7 TM025-15	TM025-16	1C618-A	EEE1-1 ↓ -2 -3	EEE1-4 ↓ -5 -6	EEE1-7 ↓ -15 -16	AAA7-10 ↓ -11 -12	AAA7-13 ↓ 14 15	AAA7-16 EEE9-16 ↓ -17			1801/E11A-007(172) 1801/E11A-012 (261)	9418/E11A-006 (173) 9418/E11A-006 (255)	HSS-15115A	37-37C 38-38C	39-39C 40-40C	41-41C 42-42C	43-43C 45-45C	47-47C 49-49C 51-51C

GITS7 SCHEM AHR HX DRAIN VALVES

PRC APERTURE CARD

This drawing, and the design it covers are the property of BECHTEL. They are merely loaned and on the borrower's express agreement that they will not be reproduced, copied, loaned, exhibited, nor used except in the limited way specified and private use permitted by any written consent given by the lender to the borrower.

POOR ORIGINAL

24 X

I certify that the microfilmed image contained on this microform were made in the normal and regular course of business. This is a true, full, correct and complete reproduction and replacement for and/or in lieu of original documents generated by the Bechtel group of companies.
Signed DANNY Date 2-28-92 Camera Type MRG 1
Camera Operator

Docket # 50-387
Control # 8303090234 – 200
Date 3/1/83 of Document:
REGULATORY DOCKET FILE