PROJ0669

ELECTRIC POWER RESEARCH INSTITUTE

MRP Materials Reliability Program _____ MRP 2018-003

Date: January 30, 2018

To: Document Control Desk
Attn: Joe Holonich
U.S. Nuclear Regulatory Commission
Washington, D.C. 20555-001

From: Mike Hoehn II, Ameren Missouri, MRP Integration Committee Chairman
Brian Burgos, EPRI, MRP Program Manager

SUBJECT: RESPONSES TO NRC REQUEST FOR ADDITIONAL INFORMATION FOR ELECTRIC POWER RESEARCH INSTITUTE TOPICAL REPORT MRP-227, REVISION 1, "MATERIALS RELIABILITY PROGRAM: PRESSURIZED WATER REACTOR INTERNALS INSPECTION AND EVALUATIONS GUIDELINE" (CAC NO. MF7740)

Dear Sir:

This letter transmits the industry's responses to the NRC requests for additional information (RAI) issued in reference 1 related to MRP-227, Revision 1 (reference 2), entitled "Materials Reliability Program: Pressurized Water Reactor Internals Inspection and Evaluations Guideline." EPRI received the formal RAIs from the NRC in a letter dated 5/15/2017 [ADAMS accession number ML17079A027]. EPRI discussed preliminary responses to the RAIs with NRC staff during public meetings on 7/12-13/2017 [ML17159A432], 9/6/2017 [ML17248A542], and 10/5/2017 [ML17278A034].

Responses to the following RAIs are included in this transmittal: 5, 9, 10, 12 and 16. Responses to the other RAIs were provided in a previous transmittal in reference 3. Enclosed are four (4) copies of this letter and the attachments.

The responses provided in this transmittal include recommended changes to MRP-227, Revision 1 which are considered changes to the guidance, as opposed to just clarifications. As such, the responses and recommended markups herein were reviewed and endorsed by the EPRI Executive Oversight Committee (PMMP) since the recommended changes affect the Section 4 and 5 tables of MRP-227, Revision 1, which are identified as an NEI-03-08 "Needed" requirements.

D035
T010
NRR

If you have additional questions or require further information, please contact Kyle Amberge (kamberge@epri.com, (704) 595-2039) or Brian Burgos (bburgos@epri.com, (724) 610-8559) or Myself (mhoehn@ameren.com, (314) 225-1543).

Sincerely,

Mike Hoehn II, Ameren-Missouri
MRP Integration Committee Chair

Brian Burgos, Program Manager
Materials Reliability Program

References:

1. U.S. Nuclear Regulatory Commission Letter, "Request for Additional Information for Electric Power Research Institute Topical Report MRP-227, Revision 1, 'Materials Reliability Program: Pressurized Water Reactor Internals Inspection and Evaluation Guideline' (CAC No. MF7740)," dated May 15, 2017 (ADAMS Accession No. ML17079A027).
2. Materials Reliability Program: Pressurized Water Reactor Internals Inspection and Evaluation Guidelines (MRP-227, Revision 1). EPRI, Palo Alto, CA: 2015. 3002005349.
3. EPRI letter MRP 2017-027, dated 10/16/2017

Project No. 669
cc: Jeff Poehler, NRC-NRR

ATTACHMENT 1

Responses to NRC Requests for Additional Information (RAIs) on MRP-227, Revision 1

1.0 Background and Introduction

This report provides responses to the U.S. Nuclear Regulatory Commission (NRC) Requests for Additional Information (RAIs) [1] related to the staff's review [2] of MRP-227, Revision 1 [3].

2.0 References

1. U.S. Nuclear Regulatory Commission Letter, "Request for Additional Information for Electric Power Research Institute Topical Report MRP-227, Revision 1, 'Materials Reliability Program: Pressurized Water Reactor Internals Inspection and Evaluation Guideline' (CAC No. MF7740)" May 15, 2017 (ADAMS Accession No. ML17079A027).
2. U.S. Nuclear Regulatory Commission Letter, "Acceptance Review of Electric Power Research Institute Topical Report MRP-227, Revision 1, 'Materials Reliability Program: Pressurized Water Reactor Internals Inspection and Evaluations Guideline,' (TAC No. MF7740)," July 15, 2016 (ADAMS Accession No. ML16154A063).
3. *Materials Reliability Program: Pressurized Water Reactor Internals Inspection and Evaluation Guidelines (MRP-227, Revision 1)*. EPRI, Palo Alto, CA: 2015. 3002005349.
4. EPRI - Report Transmittal: Materials Reliability Program: Pressurized Water Reactor Internals Inspection and Evaluations Guideline (MRP-227, Revision 1), December 21, 2015 (ADAMS Accession No. ML15358A046)
5. WCAP-17096-NP-A, Rev 2, "Reactor Internals Acceptance Criteria Methodology and Data Requirements." August 31, 2016 (ADAMS Accession No. ML16279A320)
6. Revision 1 to the Final Safety Evaluation of Electric Power Research Institute (EPRI) Report, Materials Reliability Program (MRP) Report 1016596 (MRP-227), Revision 0, "Pressurized Water Reactor (PWR) Internals Inspection and Evaluation Guidelines" (TAC No. ME0680), December 16, 2011 (ADAMS Accession No. Ml11308A770).
7. *Materials Reliability Program: Pressurized Water Reactor Issue Management Table, PWR-IMT Consequence of Failure (MRP-156, Revision 0)*. EPRI, Palo Alto, CA: 2005. 1012110.
8. Pressurized Water Reactor Owners Group Report, PWROG-14048-P, Rev. 2, "Functionality Analysis: Lower Support Columns," August 2017.
9. *EPRI Report, Pressurized Water Reactor Primary Water Chemistry Guidelines, Revision 7*. EPRI, Palo Alto, CA: 2014. 3002000505,

10. PWROG Letter, OG-17-62, "Submittal of PWROG-14048-P, Revision 1, 'Functionality Analysis: Lower Support Columns,' to the NRC for Information Only (PA-MSC-1103)," March 1, 2017 (ADAMS Accession No. ML17066A266).

11. *Materials Reliability Program: PWR Internals Material Aging Degradation Mechanism Screening and Threshold Values (MRP-175, Revision 0)*. EPRI, Palo Alto, CA: 2005. 1012081.

12. *Materials Reliability Program: Inspection Standard for Pressurized Water Reactor Internals – 2015 Update (MRP-228, Rev. 2)*. EPRI, Palo Alto, CA: 2015. 3002005386

13. Pressurized Water Reactor Owners Group Report, PWROG-15032-NP, Rev. 0, "PA-MSC-1288 Statistical Assessment of PWR RV Internals CASS Materials," November 2015.

14. NRC Staff Assessment of PWROG-15032, "Office of Nuclear Regulations Staff Assessment of the Pressurized Water Reactor Owner's Group Report PWROG-15032-NP, Revision 0, 'PA-MSC-1288 Statistical Assessment of PWR RV Internals CASS Materials," (ADAMS Accession No. ML16250A001).

15. NRC Staff Assessment of PWROG-14048, Rev. 1, "U.S. Nuclear Regulatory Commission Staff Assessment of PWROG-P, Rev. 1, 'Functionality Analysis: Lower Support Columns,'" (ADAMS Accession No. ML17251A905).

16. Westinghouse document WCAP-9251, Revision 0, "Scram Deflection Test Report 17x17 Guide Tubes, 96 Inch, and 150 Inch," December 1977. (Westinghouse Proprietary)

3.0 RAI Responses

Responses to individual NRC RAIs are provided in this section. Each section contains the RAI exactly as transmitted by the NRC, followed by the proposed response. Responses to RAIs 1-4, 6, 11, 17-18, 21-22, and 25 are not provided, as they are specific to B&W plants.

3.1 Response to NRC RAI 5

3.1.1 NRC Question

The required examination coverage in Table 4-2, "CE Plants Primary Components," and Table 4-3, "Westinghouse Primary Components," for four weld items, all of which are classified as high-consequence components in MRP-191, "Materials Reliability Program: Screening, Categorization, and Ranking of Reactor Internals Components for Westinghouse and Combustion Engineering PWR Design (MRP-191)," has been changed from 100 percent of the accessible surfaces of the [weld]" in MRP-227-A, to essentially a 25 percent sample of the weld circumference in MRP-227, Rev. 1. Table 1 below lists the old and new component item designations and the revised coverage requirement in MRP-227, Rev. 1.

Table 1 – Combustion Engineering and Westinghouse Core Support Barrel/Core Barrel Welds with Coverage Reduction in MRP-227, Rev. 1

MRP-227-A Item	Equivalent MRP-227, Rev. 1 Item	MRP-227, Rev. 1 Coverage Requirement
Core Support Barrel Assembly – Upper (core support Barrel) flange weld	C.5 Core Support Barrel Assembly Upper Flange Weld (UFW)	A minimum of 25% of the circumference of the UFW and adjacent base metal shall be examined
Core Support Barrel Assembly – Lower Cylinder Girth Welds	C6. Core Support Barrel Assembly – Middle Girth Weld (MGW)	A minimum of 25% of the OD circumference of the MGW and adjacent base metal shall be examined
Core Barrel Assembly – Upper core barrel flange weld	W3.Core Barrel Assembly – Upper flange weld (UFW)	A minimum of 25% of one side of the circumference of the surface of the UFW and adjacent base metal shall be examined
Core Support Barrel Assembly – Upper and Lower Core Barrel Cylinder Girth Welds	W4. Core Barrel Assembly – Lower Girth Weld (LGW)	A minimum of 25% of the OD circumference of the LGW and adjacent base metal shall be examined

For the original items in MRP-227-A, Note 4 clarified that a minimum of 75 percent of the total weld length (examined + unexamined) including coverage consistent with the Expansion criteria in [Table 5-2 or table 5-3], must be examined from either the inner or outer diameter for inspection credit. In MRP-227, Rev. 1, Note 5 to Table 4-2 and Note 8 to Table 4-3 state that "Examination coverage requires 25% of the circumference of either the inside diameter or the outside diameter of the weld." Note 6 to Table 4-2 and Note 10 to Table 4-3 state that "The stated coverage requirement is the minimum if no significant indications are found. However, the Examination Acceptance criteria in Section 5 require that additional coverage must be achieved in the same outage if significant flaws are found. This contingency should be considered for inspection planning purposes."

MRP-227, Rev. 1 contains a discussion of the inspection strategy for Westinghouse/Combustion Engineering (CE) core barrel weld sampling on p. 4-10 through 4-11 that pertains to the welds listed above. The discussion focuses on two elements: (1) A discussion of the probability of detecting an active cracking mechanism if a 25 percent sample of the weld is examined, on both a single plant and fleet-wide basis; (2) Focusing the 25 percent sample on the accessible portion of the weld most likely to exhibit cracking.

The NRC staff has several concerns related to the reduction of the required examination coverage for the welds listed in Table 1:

- The NRC staff is concerned that the reduced examination coverage is insufficient to provide reasonable assurance of component functionality considering that these welds are high consequence of failure items, which are not part of a redundant population.
- The discussion on pages 4-10 to 4-11 of MRP-227, Rev. 1 appears to describe some elements of a technical basis, but more detail is needed by the NRC staff to determine the adequacy of the technical basis.
- A determination of the most likely accessible portion of the weld to experience cracking is not required in Table 4-2 or Table 4-3. The discussion on pages 4-10 to 4-11 is not part of the report designated as NEI 03-08 "needed" guidance. Therefore, there is no guarantee licensees would perform such a determination.
- Even if a determination of the most likely accessible portion of the weld to experience cracking, is made, there may be significant uncertainty associated with such a determination and cracking may still be more likely to initiate in inaccessible portions, such as the weld ID.
- Coverage appears to be inconsistent between the UFW for the CE versus Westinghouse designs, with CE apparently required to examine both sides and Westinghouse only one side.

The NRC staff, therefore, requests the following information:

- Provide a technical justification for the reduction in the required examination coverage from 100 percent (minimum 75%) to 25 percent, for the component items listed in Table 1. If the technical justification relies in whole or part upon a statistical analysis, provide the detailed statistical analysis. The technical justification for the reduction in examination coverage should provide reasonable assurance that (1) the functionality of the core barrel will be maintained and (2) the structural integrity of the core barrel will be maintained to ensure safe shutdown of the reactor during the period of extended operation (PEO).
- Clarify whether the justification for reduction in the required examination coverage relies on the assumption that licensees will perform a plant-specific determination of the most likely portion of the weld to experience cracking.
- Discuss how it can be assured that the 25 percent sample of each weld examined will be selected based on an evaluation of the most likely accessible portion of the weld to exhibit cracking, since Table 4-2 and 4-3 do not require such an evaluation.
- Discuss how the proposed 25 percent sample examination coverage accounts for the possibility of cracking initiating on the opposite side of the weld from the side examined or in a portion of the component that is inaccessible.
- For C5., "Core Support barrel Assembly Upper Flange Weld (UFW)," clarify whether 25 percent of bolt sides of the weld are to be examined. If both sides are to be examined, explain the

inconsistency with W3. Core Barrel Assembly UFW, for which MRP-227, Rev. 1 only requires one side to be examined.

3.1.2 Industry Response

1. MRP-227, Revision 1 is based on a lead component and sampling approach to managing the aging-related degradation in the reactor vessel internals. The details of this approach are provided in Section 3.3 of MRP-227, Revision 1 [3]. The core barrel welds that are the subject of this question are primary components in the aging management strategy because they are considered to be lead components for their respective degradation mechanisms. These core barrel welds have not shown evidence of aging degradation to date in either the MRP-227-A inspections or the regular 10-year ISI VT-3 inspections that have been conducted. Per the definition of a primary item provided in Section 3.3.1, "where little or no service degradation has been experienced to date and/or service degradation is not expected solely based on the aging mechanism, a sample strategy for primary components is specified." This favorable operating experience was the first factor influencing the decision to reduce the required inspection coverage of these welds.

Statistical Basis for Reduced Core Barrel Weld Coverage

A sampling strategy for examination of the core barrel welds is dependent on several factors:

- Length of an acceptable crack
- Minimum size of a detectable crack
- Number of acceptable cracks permitted
- Expected distribution or location of cracking
- Inspection coverage on any given core barrel weld
- Number of welds inspected (at any given plant and across multiple plants)
- Effect of past inspection operating experience

A statistical evaluation of the required inspection coverage of 25% in MRP-227, Revision 1 was performed to support the discussion provided in Section 4.3. For simplicity, assumptions were made to reduce the number of factors that must be addressed.

- Length of an acceptable crack: The effect of this length was minimized in the analysis by assuming the presence of a very small crack and then assuming that this crack is at the detection limit of the visual inspection. A crack length of 0.25 inches was assumed in this case, expected to be within the detectable limits of an EVT-1 inspection, which has a required resolution demonstration using 0.044 inch characters per the MRP-228, Revision 2 Inspection Standard for Pressurized Water Reactor Internals [12]. Analyses for larger cracks were also performed and would provide more margin in this detectability analysis.

- Minimum size of a detectable crack: Covered in the "Length of an acceptable crack" bullet. Assuming a larger crack provides a plant with more margin in this detectability analysis, but can be more difficult to find acceptable by engineering evaluation.
- Number of acceptable cracks permitted: Multiple cases were evaluated to determine the sensitivity to this variable
- Expected distribution or location of cracking: Assumed that the potential cracks were randomly distributed around the circumference of any given weld (see response to part 2 of this question)
- Inspection coverage on any given core barrel weld: Assumed to be 25% of the entire weld length, per the requirements of MRP-227, Revision 1
- Number of welds inspected (at any given plant and across multiple plants): Multiple cases were evaluated to determine the sensitivity to this variable
- Effect of past inspection operating experience: Addressed in a conservative manner by treating those inspections as if they had only achieved the 25% coverage required in MRP-227, Revision 1.

The probability that at least one crack is detected was evaluated with these input parameters. This probability was calculated by simply evaluating the probability of detecting a single crack in a single weld and then extending it to multiple cracks in each weld or inspections across multiple welds. The effect of crack size was accounted for by recognizing that a crack will be detected if at least a part of the crack as long as the minimum detectable crack size intersects the inspected length. This results in some increase in detection probability with increasing crack size.

To extend the analysis to welds with more than one crack, it was assumed that the individual statistical trials were independent of one another and that each had the same probability of detection as the first crack. This assumption allows cracks to overlap one another, which is conservative relative to reality—a weld with 8 cracks present would have those cracks in 8 separate locations, resulting in a decrease of the length of weld available for each subsequent crack.

Similar assumptions were made for extending the analysis to multiple welds, whether in the same plant (e.g., if the upper flange weld and upper girth weld were inspected on the same core barrel) or across multiple plants (e.g., if upper flange welds were inspected at 10 different plants). Note that this assumes that certain welds within the same core barrel and across different plants are in the same statistical population. This was limited by the applicable degradation mechanisms: welds that are subject to SCC should be treated in a population separate from welds subject to IASCC. Thus, the core beltline welds were grouped together in one population and the welds outside of the core beltline were grouped in a separate population. It is assumed that each weld has a reasonably similar likelihood of forming a crack. Given that there has been no operating experience with SCC or IASCC cracking in the PWR core barrel welds, to date, making a different assumption about the likelihood is difficult and would be strongly based on speculation and hypothesis. Note that the discussion on stress, potential fabrication defects, and neutron dose provided in the other parts of the response to this question provide further support for this assumption about the population of welds.

The probability of detecting one crack in one inspected weld was calculated as noted above. The probability of interest for welds with multiple assumed cracks or across multiple inspected welds is the probability of detecting **at least one** of the cracks. This could be detecting one crack or 10 cracks or all of the cracks. Thus, it is the complement of the probability of detecting nothing and is calculated as:

$$1 - p_0^n$$

Where:

p_0 = probability of detecting nothing for a single crack or single inspection

n = number of cracks in a particular weld or number of welds inspected

The results of the probabilistic analysis are provided in Table 1, Table 2, and Table 3 for 0.25 inch, 1 inch, and 2 inch cracks, respectively. In these tables, the number of cracks across the columns indicates the number of cracks assumed in each weld inspected, while the number of inspections across the rows indicates the number of welds inspected. It is assumed that each weld inspected for the same mechanisms and to the same inspection standard (MRP-228 [12]) has the same likelihood of detecting a crack. Note that the probabilities calculated in these tables reduce the probability of detection due to the assumed minimum detectable length by subtracting that length from each end of the inspected length.

These tables show several things about the likelihood of crack detection by a 25% inspection coverage:

- Assumed crack size has a slight effect on the probability of detection, with larger cracks having a higher probability than smaller cracks. In this calculation, the increase in probability comes from the potential to detect the end of a crack that extends into the uninspected portion of the weld.
- Increased numbers of cracks in a given weld results in significant increases in the likelihood of a 25% inspection detecting at least one crack. As noted in Section 4.3 of MRP-227, Revision 1, the presence of eight cracks in a single weld results in at least a 90% probability of detecting at least one crack.
- Higher numbers of inspected welds has the same impact on the likelihood of detection.

Assuming one 0.25 inch flaw in each weld results in the likelihood of detection reaching 95% around 10 inspections with 25% coverage. To date, greater than 10 MRP-227 inspections have been performed on the welds subject to SCC and at least 10 inspections have been performed on welds subject to IASCC. At a high level, those inspections and the coverage achieved are summarized here:

- Westinghouse and CE upper flange weld: At least 11 inspections have been conducted, which have achieved 100% reported coverage of the weld. These have each been of one

side of the core barrel with a mix of inspections from the OD and inspections from the ID.

- Westinghouse lower flange weld and CE lower girth weld: At least 9 inspections have been conducted, which have achieved greater than 75% reported coverage of the weld. Six of these achieved greater than 90% and three reported 100% coverage. These have all been conducted from the OD of the core barrel.
- Westinghouse and CE upper girth weld: At least 9 inspections have been conducted, which have achieved 100% reported coverage of the weld. These have each been of one side of the core barrel with a mix of inspections from the OD and inspections from the ID.
- Westinghouse lower girth weld and CE middle girth weld (core beltline welds): At least 9 inspections have been conducted, which have achieved greater than 55% reported coverage of the weld. Seven of these achieved greater than 75% coverage. These have all been conducted from the OD of the barrel.

None of these inspections have reported cracking-related relevant conditions. In addition, ASME Code Section XI general visual (VT-3) inservice inspections (ISI) have been performed periodically at each plant at 10-year intervals during the initial 40-year licensing period. These inspections provided added assurance that no gross degradation is present in the core barrel weld surfaces that were examined.

These inspections provide a significant body of evidence for the lack of SCC or IASCC occurrence in the core barrel welds to date. This lack of an active degradation mechanism supports the use of a sampling strategy to monitor for the potential initiation of the degradation. These inspections achieved a much higher coverage level than the 25% assumed in Table 1 through Table 3, providing additional support for the statistical basis of the sampling strategy.

Table 1: Probability of Detecting at Least One Crack when Inspecting 25% of the Core Barrel Weld and Assuming 0.25 inch Cracks

Crack Length (in)	0.25						
No. of welds/ Inspections	1 crack	2 cracks	3 cracks	4 cracks	5 cracks	8 cracks	10 cracks
1	24.9%	43.7%	57.7%	68.3%	76.2%	89.9%	94.3%
2	43.7%	68.3%	82.1%	89.9%	94.3%	99.0%	99.7%
3	57.7%	82.1%	92.4%	96.8%	98.6%	99.9%	100.0%
4	68.3%	89.9%	96.8%	99.0%	99.7%	100.0%	100.0%
5	76.2%	94.3%	98.6%	99.7%	99.9%	100.0%	100.0%
6	82.1%	96.8%	99.4%	99.9%	100.0%	100.0%	100.0%
7	86.6%	98.2%	99.8%	100.0%	100.0%	100.0%	100.0%
8	89.9%	99.0%	99.9%	100.0%	100.0%	100.0%	100.0%
9	92.4%	99.4%	100.0%	100.0%	100.0%	100.0%	100.0%
10	94.3%	99.7%	100.0%	100.0%	100.0%	100.0%	100.0%
11	95.7%	99.8%	100.0%	100.0%	100.0%	100.0%	100.0%
12	96.8%	99.9%	100.0%	100.0%	100.0%	100.0%	100.0%
13	97.6%	99.9%	100.0%	100.0%	100.0%	100.0%	100.0%
14	98.2%	100.0%	100.0%	100.0%	100.0%	100.0%	100.0%
15	98.6%	100.0%	100.0%	100.0%	100.0%	100.0%	100.0%
16	99.0%	100.0%	100.0%	100.0%	100.0%	100.0%	100.0%
17	99.2%	100.0%	100.0%	100.0%	100.0%	100.0%	100.0%
18	99.4%	100.0%	100.0%	100.0%	100.0%	100.0%	100.0%
19	99.6%	100.0%	100.0%	100.0%	100.0%	100.0%	100.0%
20	99.7%	100.0%	100.0%	100.0%	100.0%	100.0%	100.0%

Table 2: Probability of Detecting at Least One Crack when Inspecting 25% of the Core Barrel Weld and Assuming 1 inch Cracks

Crack Length (in)	1						
No. of welds/ Inspections	1 crack	2 cracks	3 cracks	4 cracks	5 cracks	8 cracks	10 cracks
1	25.1%	43.9%	58.0%	68.6%	76.5%	90.1%	94.5%
2	43.9%	68.6%	82.4%	90.1%	94.5%	99.0%	99.7%
3	58.0%	82.4%	92.6%	96.9%	98.7%	99.9%	100.0%
4	68.6%	90.1%	96.9%	99.0%	99.7%	100.0%	100.0%
5	76.5%	94.5%	98.7%	99.7%	99.9%	100.0%	100.0%
6	82.4%	96.9%	99.5%	99.9%	100.0%	100.0%	100.0%
7	86.8%	98.3%	99.8%	100.0%	100.0%	100.0%	100.0%
8	90.1%	99.0%	99.9%	100.0%	100.0%	100.0%	100.0%
9	92.6%	99.5%	100.0%	100.0%	100.0%	100.0%	100.0%
10	94.5%	99.7%	100.0%	100.0%	100.0%	100.0%	100.0%
11	95.8%	99.8%	100.0%	100.0%	100.0%	100.0%	100.0%
12	96.9%	99.9%	100.0%	100.0%	100.0%	100.0%	100.0%
13	97.7%	99.9%	100.0%	100.0%	100.0%	100.0%	100.0%
14	98.3%	100.0%	100.0%	100.0%	100.0%	100.0%	100.0%
15	98.7%	100.0%	100.0%	100.0%	100.0%	100.0%	100.0%
16	99.0%	100.0%	100.0%	100.0%	100.0%	100.0%	100.0%
17	99.3%	100.0%	100.0%	100.0%	100.0%	100.0%	100.0%
18	99.5%	100.0%	100.0%	100.0%	100.0%	100.0%	100.0%
19	99.6%	100.0%	100.0%	100.0%	100.0%	100.0%	100.0%
20	99.7%	100.0%	100.0%	100.0%	100.0%	100.0%	100.0%

Table 3: Probability of Detecting at Least One Crack when Inspecting 25% of the Core Barrel Weld and Assuming 2 inch Cracks

Crack Length (in)	2						
No. of welds/ Inspections	1 crack	2 cracks	3 cracks	4 cracks	5 cracks	8 cracks	10 cracks
1	25.3%	44.3%	58.4%	68.9%	76.8%	90.4%	94.6%
2	44.3%	68.9%	82.7%	90.4%	94.6%	99.1%	99.7%
3	58.4%	82.7%	92.8%	97.0%	98.8%	99.9%	100.0%
4	68.9%	90.4%	97.0%	99.1%	99.7%	100.0%	100.0%
5	76.8%	94.6%	98.8%	99.7%	99.9%	100.0%	100.0%
6	82.7%	97.0%	99.5%	99.9%	100.0%	100.0%	100.0%
7	87.1%	98.3%	99.8%	100.0%	100.0%	100.0%	100.0%
8	90.4%	99.1%	99.9%	100.0%	100.0%	100.0%	100.0%
9	92.8%	99.5%	100.0%	100.0%	100.0%	100.0%	100.0%
10	94.6%	99.7%	100.0%	100.0%	100.0%	100.0%	100.0%
11	96.0%	99.8%	100.0%	100.0%	100.0%	100.0%	100.0%
12	97.0%	99.9%	100.0%	100.0%	100.0%	100.0%	100.0%
13	97.8%	99.9%	100.0%	100.0%	100.0%	100.0%	100.0%
14	98.3%	100.0%	100.0%	100.0%	100.0%	100.0%	100.0%
15	98.8%	100.0%	100.0%	100.0%	100.0%	100.0%	100.0%
16	99.1%	100.0%	100.0%	100.0%	100.0%	100.0%	100.0%
17	99.3%	100.0%	100.0%	100.0%	100.0%	100.0%	100.0%
18	99.5%	100.0%	100.0%	100.0%	100.0%	100.0%	100.0%
19	99.6%	100.0%	100.0%	100.0%	100.0%	100.0%	100.0%
20	99.7%	100.0%	100.0%	100.0%	100.0%	100.0%	100.0%

Functional Basis for Reduced Coverage Requirement

The preceding discussion in this response focused on the likelihood of flaw detection given the operating experience and the 25% coverage inspection specified by MRP-227, Revision 1. This included the details of the statistical argument presented in MRP-227, Revision 1 Section 4.3. These arguments are further supported by considering the potential for an effect on the function of the core barrel welds. According to WCAP-17096-NP-A [5], the function of the core barrel girth welds is to act as a primary core support structure. The pressurized water reactor issue management table in MRP-156 [7] provides additional detail on the core barrel functions:

- Provides core support through other internals structures attached to the barrel, such as the core lower core plate and baffle-former assembly
- Directs coolant flow to the core and out of the vessel
- Maintain the capability to insert the controls for safe shutdown through the lower core plate and providing alignment for the upper core plate

The discussion here will be divided into consideration of function during a **faulted** event and function during **normal** operation.

Faulted Event:

During a faulted event, such as an earthquake or loss of coolant accident, the stress applied to the core barrel is significantly higher than during normal operation. The reactor vessel internals are designed to maintain the functions of the core barrel even if the faulted condition results in complete 360°, through-wall fracture of a core barrel girth weld. The secondary core support structure in Westinghouse-designed plants and the core stops in CE-designed plants are designed to catch the core barrel and only allow a short drop of the core barrel if it fully fractures. The radial keys and clevises in Westinghouse-designed plants and core stabilizer lugs and snubbers in CE-designed plants at the bottom of the core barrel ensure that a barrel experiencing this type of extreme event cannot swing, rotate, or displace significantly. The combination of these two design features ensures that the core will be supported during a faulted event and that the control rods can still be inserted for safe shutdown.

Testing was conducted to measure the effect of various abnormal conditions on the ability to insert the control rods and the time to scram [16]. One of these tests investigated the effect of a full core drop type accident. As noted above, the distance that the core can drop is limited by the reactor vessel internals design. This limited drop distance leaves the upper fuel alignment pins partially engaged, which in turn limits the amount that the top nozzles of the fuel can be offset from the control rod clusters in the upper internals. Tests were performed at the maximum possible offset and determined that the control rods would still insert fully and that the increased scram times were within acceptable limits. These tests provide objective evidence of the ability to safely shut down during a faulted event where a core barrel girth weld completely separates with a 360°, through-wall crack.

A 360°, through-wall crack is not the only postulated failure. A through-wall crack that has propagated around most of the barrel but left a small remaining ligament was also considered. In this case, it was assumed that the remaining uncracked ligament was small enough to allow the rest of the barrel to separate and tilt, while still holding the side with the ligament in place. This case is considered less limiting than the full, 360°, through-wall crack for the following reasons:

- The existing design features that limit movement of the core barrel also limit the amount of possible tilt, in particular the radial keys and clevises or core stabilizing lugs and snubbers and the core barrel outlet nozzles
- The upper fuel alignment pins will still be engaged and prevent lateral movement beyond that already tested for the full core drop
- The presence of the remaining ligament of the core barrel will limit the amount of lateral movement that can occur and will ensure that the side of the core closest to the ligament remains well-aligned

The testing performed in [16] also tested the effect of significant fuel deflections (i.e., the center of the fuel assembly was deflected laterally while the top and bottom were pinned) and determined that effect on scram time was acceptable. This provides evidence that the small

"bend" in the control rod insertion path that could be caused by a tilted core barrel would not have an impact on the ability to insert the control rods for core shutdown.

The occurrence of a faulted event would result in plant shutdown and corrective actions to address the potential effects. Thus, continued operation in the degraded conditions considered here would not occur.

Normal Operation:

During normal operation, it is considered likely that a full separation of one of the girth welds would be detected through the loose parts monitoring system, in-core or ex-core detectors, or some other means. However, it is possible that the separation may not be recognized and addressed instantaneously since such a hypothetical event in this case would not be associated with the faulted conditions discussed above. From a safety standpoint, the separation would not result in a loss of core support or control rod insertability, but the effect of the separation on the bypass flow in the core region could have an impact on safety. Thus, the ability of the MRP-227, Revision 1 inspection to detect structurally significant cracking is important.

The primary stresses on the core barrel girth welds during normal operation are low. Based on existing analyses, the critical crack length for core barrel girth welds under normal operating conditions is at least several feet. This was calculated using a linear elastic fracture mechanics approach and evaluating the applied stress intensity factor at the crack tip versus the fracture toughness of the material, using the margin factor of 2.77 from WCAP-17096-NP-A. This critical flaw size is around 10% of the total core barrel weld length, which provides further credence to the one-side inspection of the weld since such a long crack is unlikely to form without penetrating the full thickness of the weld. Note that consideration of faulted conditions results in a shorter critical crack length due to the higher loads during an event; however, the safety impacts of a faulted event have already been dealt with separately above.

Summary:

Consideration of the faulted case and the normal operation case provide assurance that the core barrel will maintain its core support and safe shutdown functions under faulted conditions and that the MRP-227, Revision 1 inspection will have a reasonable probability of detecting a crack.

Conclusions

In conclusion, the reduced coverage requirement is justified by the following points:

- A sampling strategy can be employed per MRP-227, Revision 1, Section 3.3.1 since "little or no service degradation has been experienced to date and/or service degradation is not expected solely based on the aging mechanism"
- The small crack size assumed for this evaluation is consistent with the capabilities of the inspection method deemed appropriate for this component (EVT-1)

- The crack size assumed for this evaluation is small enough to reasonably assure the continued functionality and structural integrity of the core barrel. A plant-specific acceptance criteria evaluation could be used to increase the allowable crack length or number of cracks to provide even more margin for this evaluation.
- Under faulted conditions, the design features included in the reactor vessel internals limit the adverse effects of a full failure of a core barrel girth weld on the core support or safe shutdown functions of the core barrel
- Under normal operating conditions, the critical crack size based on having a margin between the applied stress intensity and the fracture toughness of the material allows for a critical crack length of at least several feet, which increases the probability of detecting a structurally significant crack
- Multiple plants have performed inspections on these PWR core barrel welds and other PWR core barrel welds at higher coverage levels and have not detected cracking-related relevant conditions
- These PWR core barrel inspection requirements will continue to be applicable to plants licensed for the period of extended operation; thus, the sampling of PWR core barrel welds will continue to grow
- Per the requirements of MRP-227, Revision 1, Section 7, any relevant conditions detected during the inspections will be recorded and entered into the owner's plant corrective action program and dispositioned. Furthermore, the results of the inspection will be reported to the MRP Program Manager for publication in the industry report to the fleet, the regulator, the PWROG, and other stakeholders. Thus, if evidence of core barrel weld cracking is detected at one plant, it will result in further evaluation and response across the fleet.

2. The justification provided in the response to part 1 of this question was based on a random distribution of SCC or IASCC cracking in each weld. The likelihood of SCC or IASCC at any given location is expected to vary somewhat based on material, environment, or stress conditions.

   Quality assurance of these safety-related components during fabrication and construction would have reduced or eliminated the possibility of many potential material issues that can contribute to SCC or IASCC. It can be reasonably assumed that the base and weld metal composition and quality were consistent from weld to weld and plant to plant due to procurement and testing requirements. The non-destructive testing required for each weld during manufacturing, such as radiographic testing and dye penetrant testing of weld surfaces, would have detected significant weld defects that could have served as crack initiation sites. A review of early plant and late plant drawings showed that the non-destructive test requirements were similar. These fabrication and testing requirements would have been applicable to all core barrel manufacturers. It is possible that weld stops and starts, embedded slag or porosity, or locations of weld repairs exist, but the location of these potential flaw initiation sites is expected to be randomly distributed, consistent with the random distribution of cracking assumed in the response to part 1 of this question.

   Local variations in environmental conditions are not expected for water chemistry but are expected for accumulated neutron dose. The PWR core barrel welds are located in moderate to high flow areas with few opportunities for crevices. This flow refreshes the coolant in contact with the welds, avoiding the risk of SCC or IASCC occurring due to deleterious chemical species. Additionally, the primary water coolant chemistry is maintained according to the action levels in the EPRI Primary Water Chemistry Guidelines [9]. As noted in MRP-227, Revision 1, the neutron irradiation dose accumulated on the core barrel welds is going to vary depending on location. If IASCC cracking occurs, it might be expected to appear first in a location with the highest fluence and stress, with stress as the more important factor at higher fluence levels. However, the location of highest stress (barrel outer diameter due to thermal effects) does not correspond with the location of highest dose (barrel inner diameter due to core proximity) on the core barrel. Due to the lack of occurrences of IASCC cracking in PWR welded components to date it cannot be conclusively determined what combination of stress or dose will create the highest likelihood of IASCC. However, as noted in the MRP-227, Revision 1 discussion of the core barrel welds affected by IASCC (the Westinghouse-design LGW and CE-design MGW), only the outer diameter is accessible for inspection. Thus, the 25% sampling inspection of PWR core barrel welds for IASCC should include portions of the weld with the highest neutron fluence, within the accessibility limitations imposed by the structure. The location of more highly irradiated portions of the core barrel welds can be determined by locating the areas where the edge of the reactor core is radially closest to the barrel.

   Based on these considerations, the only requirement for focusing the inspection on areas with a higher likelihood of degradation is the requirement to include a sample of the most highly irradiated accessible portions of the CE middle girth weld and Westinghouse lower girth weld in the 25% of the weld inspected. Also, since the cracking is expected to be randomly distributed,

the inspection area chosen for these primary component welds with a 25% coverage requirement should be different for each inspection interval, ensuring more complete coverage of the welds over the sampling period. These two changes are reflected in the response to part 3 of this question.

3. For the CE middle girth weld and the Westinghouse lower girth weld, Table 4-2 and Table 4-3 will be updated to include the following text in the Examination Coverage column:

- Westinghouse UFW, W3:
  - Note 11 will be added to the Examination Coverage of the table entry: "11. Inspections subsequent to the first 25% sampling inspection must cover weld length that was not inspected during previous examinations. A minimum of 20% out of the 25% inspection coverage of each subsequent inspection must include previously un-inspected weld length as possible within the limitation of the remaining accessible un-inspected weld."
- CE UFW, C5:
  - Note 7 will be added to the Examination Coverage of the table entry: "7. Inspections subsequent to the first 25% sampling inspection must cover weld length that was not inspected during previous examinations. A minimum of 20% out of the 25% inspection coverage of each subsequent inspection must include previously un-inspected weld length as possible within the limitation of the remaining accessible un-inspected weld."
- Westinghouse LGW, W4:
  - Examination Coverage text will be updated: "A minimum of 25% of the OD circumference of the LGW and adjacent base metal shall be examined. This 25% sample must include the accessible portion of the weld OD with the highest accumulated neutron fluence."
  - Note 11 will be added to the Examination Coverage of the table entry: "11. Inspections subsequent to the first 25% sampling inspection must cover weld length that was not inspected during previous examinations. A minimum of 20% out of the 25% inspection coverage of each subsequent inspection must include previously un-inspected weld length as possible within the limitation of the remaining accessible un-inspected weld."
- CE MGW, C6:
  - Examination Coverage text will be updated: "A minimum of 25% of the OD circumference of the MGW and adjacent base metal shall be examined. This 25% sample must include the accessible portion of the weld OD with the highest accumulated neutron fluence."
  - Note 7 will be added to the Examination Coverage of the table entry: "7. Inspections subsequent to the first 25% sampling inspection must cover weld length that was not inspected during previous examinations. A minimum of 20% out of the 25% inspection coverage of each subsequent inspection must include previously un-inspected weld length as possible within the limitation of the remaining accessible un-inspected weld."

Note that in Westinghouse-designed plants with neutron panels on the outside of the core barrel, only a portion of the weld circumference in the core beltline region is accessible given currently available inspection techniques. The exact percentage of the core barrel circumference covered by the neutron panels varies with plant design. Between 50 and 60 percent of the barrel circumference will be accessible to a visual inspection in a neutron panel plant. This does not impact the inspection coverage requirements detailed here and in MRP-227, Revision 1 because greater than 25% of the total core barrel girth weld length is accessible.

4. Consideration of which side SCC or IASCC is expected to initiate from is different for the upper flange weld and the lower girth weld (Westinghouse) or middle girth weld (CE). This is due to the effects of neutron radiation.

   For the upper flange weld, the normal operating stresses are expected to generally be low, leaving the potential for SCC initiation driven primarily by the weld residual stresses. As discussed in the response to part 2 of this question, there may be variations in weld residual stress due to stops and starts or repairs, but these would be distributed randomly from plant to plant, both around the barrel circumference and between the OD and ID of the barrel. Additionally, since these were full penetration welds, the order of the welds made from the OD and those made from the ID could also have an impact on whether the residual stress is higher on the inside or the outside. This was addressed in the fabrication specifications by requiring that the welds sequences be scheduled such that barrel distortion and residual stresses be minimized. To meet this requirement, the manufacturers would have welded partway on one side and then switched to the other side to weld partway, alternating the imposition of stress due to weld shrinkage during cooling and solidification. The exact number of alternations may have varied from manufacturer to manufacturer, but the end goal of a minimizing distortion and weld residual stress would have driven each manufacturer to a similar end result where the weld residual stresses are similar on the ID and the OD. Based on these fabrication considerations, the likelihood of crack initiation is considered similar between the OD and the ID of the UFW and the current guidance allowing inspection of one side is appropriate.

   For the Westinghouse LGW or the CE MGW, the normal operating stresses are strongly driven by the thermal differential across the barrel wall due to the effects of irradiation. The higher temperature closer to the core causes a net tensile stress on the OD of the barrel in the region of the LGW or MGW that is higher than that on the ID (even if weld residual stresses are not assumed to relax). As discussed in the response to part 2 of this question, current data and experience does not conclusively demonstrate that the higher stress on the OD of the barrel will lead to more IASCC risk than the higher dose on the ID of the barrel. However, the ID of the barrel in this region would only be accessible if the baffle-former assembly (Westinghouse designs) or core shroud assembly (CE designs) were disassembled to allow access. This would be a high-risk, high-dose, high-cost alternative and would be unreasonable and unwarranted considering the complete lack of observed cracking in the operating experience with no concomitant increase to plant safety.

The one-sided inspection is consistent with the intention of the MRP-227, Revision 1 inspection and evaluation program to manage the potential degradation of the core barrel welds due to aging-related effects. Given the considerations presented in this response and in the response to part 2 of this question, the locations required in the inspection are reasonable for monitoring for cracking. Combining this with the response to part 1 of this question, the inspection sampling of multiple core barrel welds within a plant and across multiple plants provides a reasonable basis for expecting that the core barrel weld inspections will detect the appearance of cracking degradation in those welds. Once cracking is detected, the industry will respond with further measures that may include expanded inspections, volumetric inspections, additional analyses, or repair and mitigation operations.

5. The intention of the Primary component entry for the CE component C5: "Core Support Barrel Assembly Upper Flange Weld (UFW)" was to require inspection of one side of the weld. This could be conducted on either side of the weld (ID or OD). This would be consistent with the coverage requirements for the Westinghouse component W3: "Core Barrel Assembly Upper Flange Weld". The examination coverage for C5 will be updated to state:

   "A minimum of 25% of one side of the circumference of the surface of the UFW and adjacent base metal shall be examined."

3.2 Response to NRC RAI 9

3.2.1 NRC Question

In Table 4-2, CE Plants Primary Components, Item C8, "Lower Support Structure – Core Support Columns," is a new item that includes both core support columns (for plants with full height bolted core shroud plates) and core support column welds (for plants with half-height welded core shroud plates). The examination coverage for the core support columns is 25% of the column assemblies as visible using a VT-3 examination from above the lower core plate and for the core support column welds is 100 percent of the accessible surfaces. In MRP-227-A the equivalent item included only the core support column welds, with examination coverage of 100 percent of the accessible surfaces, for all plants. There are differences in required examination coverage for the core support column components for the two plant design variations. In addition, the component in Westinghouse-design RVI with the same function is an Expansion component whereas the CE core support columns are a Primary component.

MRP-227-A has two separate items for Westinghouse Lower Support Assembly - lower support column bodies depending on the material (cast or non-cast). In MRP-227, Rev. 1, these two items are combined into one in Item W4.4., "Lower Support Assembly – Lower Support Column Bodies (both cast and non-cast)." In addition, the examination method is changed from enhanced visual testing (EVT-1) examination to visual testing (VT)-3 examination and the examination coverage is changed from 100 percent of accessible surfaces (for non-cast) or 100 percent of accessible support columns (for cast) to 25 percent of column assemblies as visible using from above the lower core plate.

The NRC staff is concerned that the reduced coverage for the CE core support columns and Westinghouse lower support column bodies is not sufficient to provide reasonable assurance of component functionality, considering that the lower support columns are high consequence of failure components. Also, it is not clear how much information can be gained by a visual inspection from above the core plate.

To resolve these discrepancies, the NRC staff requests the following information:

a. Justify the required coverage of 25 percent as visible from above the core plate for Item C8 and W4.4 is sufficient to provide reasonable assurance of functionality.
b. Justify the use of VT-3 examination instead of EVT-1 to detect cracking.
c. Clarify the meaning of "25% of column assemblies as visible using a VT-3 examination from above the lower core plate." Does this mean that 1) only 25 percent of the total number of columns visible need to be inspected, 2) 25 percent of the total number of columns (visible and not visible) must be examined to claim credit for the examination, or that 3) 25 percent of the total columns should be inspected if this number is visible? Should all columns visible from above the core plate be examined, or just enough to constitute 25 percent of the total population (visible plus not visible).
d. What expansion of the examination scope to the remaining columns will be conducted if degradation is observed in the 25 percent sample?

e. For CE-design RVI, explain why examination of the core support columns is specified only for plants with full-height bolted shroud plates and not for plants with core shrouds assembled in two vertical sections.
f. Explain why the core support columns are a Primary component for CE plants but the component in Westinghouse plants with the same function (lower core support columns) is an Expansion component.

3.2.2 Industry Response

a. MRP-227, Revision 1 defined the examination coverage of the expansion component lower support column bodies as 25% of the column assemblies as visible using a VT-3 examination from above the lower core plate. The basis to reduce the examination coverage is the combination of the low likelihood of failure of the lower support columns with the significant redundancy provided in the lower support structure. PWROG-14048, Revision 2 [8] (Revision 1 provided to the NRC for information only via [10] with a staff assessment documented in [15]) was generated to develop a justification that the lower support columns will remain functional through the licensing renewal period of extended operation. To do this an FMEA was performed for the components followed by a failure tolerance analysis (considering both the Westinghouse and CE designs). The most limiting functionality case was determined by analysis to be a degraded condition where over 50 percent of the support columns were failed (for each of the column configurations based on plant design).

   Regarding the likelihood of failure, full section cracking of a column such that compressive load bearing capability is lost is considered to be an extremely unlikely scenario for the following reasons:

   - Quality controls during fabrication, such as liquid penetrant inspection or radiography, limit the number and size of the flaws that could be present.
   - Cast austenitic stainless steel lower support columns have been shown to have relatively low ferrite content such that susceptibility to thermal embrittlement and the combined effects of thermal and irradiation embrittlement are not expected to be dominant [13], which was endorsed by the NRC staff via [14].
   - The tensile stress in the columns is generally low (less than 15 ksi) under all conditions as demonstrated in PWROG-14048 [10]. Furthermore, this tensile stress is primarily a result of bending caused by displacement-limited loads, which is not conducive to cracking through the full section.
   - There are no credible mechanisms for flaw initiation or growth beyond what is permitted by the fabrication controls. A representative flaw tolerance evaluation shows critical flaw sizes to be more than ten times larger than any flaw permitted by fabrication.
   - Even for compressive loads transmitted across a complete tensile crack normal to the column axis, the material has sufficient remaining toughness to withstand any cracking from (transverse) tensile stresses that could be generated in the columns as a result of the tensile loading

The conclusion from the functionality analysis is that there is significant redundancy in the system such that greater than 50% of the columns can be non-load bearing and the core will remain adequately supported to allow the rods to be safely inserted.

Due to the combination of the low likelihood of failure and the significant redundancy in the column demonstrated through analysis (functionality is retained even after postulated loss of support from 50% of the columns), it is considered technically acceptable to sample the columns for evidence of aging-related degradation by performing an examination of 25% of the column bodies. This is consistent with the sampling strategy outlined in MRP-227, Revision 1 for components where little or no service degradation has been experienced to date and/or service degradation is not expected solely based on the aging mechanism. If no degradation is found within the 25% of the columns sampled, it can be reasonably concluded that there will be very few partially cracked columns in the uninspected 75% of the columns and that, given the substantial structural margins documented in PWROG-14048, the core support structure can be expected to retain adequate margin in its structural integrity. The examination would expand to the remainder of the column bodies should degradation be observed in the initial inspection population.

The inspection of the columns from above the core plate is justified based on the level of degradation required to cause loss of functionality. Per PWROG-14048 loss of column function can only be compromised by the loss of compressive load carrying capability that would only be result from full section cracking. Such loss of function would not be caused by small, tight cracks which could only be detected by a high resolution visual examination. Instead, this would result from the relevant conditions called out in MRP-227, Revision 1, Table 5-3: "fractured, misaligned, or missing columns." These relevant indications can be detected by a visual VT-3 examination from above the core plate.

b. As noted in the response to part A, the relevant conditions for the visual inspection are consistent with the level of degradation required to impact the functionality of the columns. A VT-3 inspection through the holes in the core plate is adequate to detect fully fractured, misaligned, or missing columns, which are the only condition that would impact functionality. The justification for the level of degradation necessary to affect functionality is provided in PWROG-14048. Additionally, the portions of the columns visible through the holes of the core plate are in regions of high fluence.

c. The intent of the examination coverage for the columns is consistent with option 2 in the question. The inspection requirement "25% of the column assemblies as visible using a VT-3 examination from above the lower core plate," refers to 25% of the total number of columns from the overall population (both those visible and those not visible when viewing from above the lower core plate) in order to claim credit for the inspection. This will be clarified by modifying the text in the MRP-227, Revision 1 tables. For the CE core support columns, the language in Table 4-2 of MRP-227, Revision 1 will be updated as shown after the response to part F of this RAI response (Note that the CE core support columns will be moved to the Expansion category

and placed in Table 4-5, as explained in part F). For the Westinghouse lower support columns, the text in Table 4-6 of MRP-227, Revision 1 will be updated as follows.

Table 4-6 of MRP-227, Revision 1 will be updated as shown below:

Expansion Item	Applicability	Effect (Mechanism)	Primary Link (Note 1)	Examination Method/Frequency (Note 1)	Examination Coverage
Lower Support Assembly W4.4.Lower support column bodies (both cast and non-cast)	All plants	Cracking (IASCC) Aging Management (IE)	W4.Lower Girth Weld (LGW)	Visual (VT-3) examination. Re-inspection every 10 years following initial inspection.	25% of the total number of column assemblies (both visible and non-visible from above the lower core plate). ~~as visible~~ using a VT-3 examination from above the lower core plate. See Figure 4-23.

d. As stated in the response to part a, should degradation be observed in the initial inspection population the examination would expand to include the remainder of the population of the column bodies (that are visible through the lower core plate). Table 4-5 of MRP-227, Revision 1 will be updated to make this clarification as shown below following the response to part F of this RAI.

e. Table 4-2 of MRP-227, Revision 1 lists the inspection of the core support columns as a Primary component inspection of the CE RVI for plants with either full-height or half-height welded core shroud designs. MRP-227, Revision 1 does specify 25% examination coverage of the core support columns for plants with a full height bolted core shroud design and 100% examination coverage of the accessible column assemblies for plants with core shrouds assembled in two vertical sections. However, the conclusions in PWROG-14048 provide sufficient technical justification for the core support column welds to be an Expansion component for both core shroud designs as discussed in the response to part A of this RAI. The conclusions of PWROG-14048 that inspections are not necessary to ensure the functionality of the lower support columns through the period of extended operation are applicable to both CE RVI core shroud designs. MRP-227, Revision 1 will be revised to change this component from Primary to Expansion as shown in the response to part F of this question below.

f. PWROG-14048 provides sufficient technical justification for the lower (core) support columns to be expansion components for both the Westinghouse and CE RVI design, based on the low likelihood of failure and the significant margin for functionality as described in the response to part A of this question. However, MRP-227, Revision 1 was issued for safety evaluation prior to the publication of PWROG-14048 in February 2017, so changes to make the CE core support columns into an expansion item were not implemented at that point. Assignment of the CE columns to the primary inspection category was carried over from MRP-227-A. Based on the justification provided in PWROG-14048, the CE core support columns will be changed to Expansion components from the core barrel middle girth weld (MGW) similar to the expansion of the Westinghouse lower support column bodies from the core barrel lower girth weld (LGW). The changes to be implemented are shown in the following tables.

The core support columns (Item C8) will be moved from Table 4-2 (CE Plant Primary Components) to Table 4-5 (CE Plant Expansion Components). Changes from the original content of this item from Table 4-2 are shown below.

Expansion Item	Applicability	Effect (Mechanism)	Primary Link (Note 1)	Examination Method/Frequency (Note 1)	Examination Coverage
C8.Lower Support Structure Core support columns	Plants with full-height bolted or half-height welded core shroud plates	Cracking (SCC, IASCC, Fatigue including damaged or fractured material) Aging Management (IE, TE)	C6.Middle Girth Weld (MGW)	Visual (VT-3) examination Re-inspection every 10 years following initial inspection.	Plants with full height bolted core shroud plates: 25% of the total number of column assemblies (both visible and non-visible from above the core support plate) ~~as visible~~ using a VT-3 examination from above the core support plate. Plants with core shrouds assembled in two vertical sections: 25% ~~100%~~ of the accessible surfaces of the core support column welds, from the top side of the core support plate ~~(Note 3)~~. (Note 3) See Figures 4-36 and 4-37~~4-3~~.

3. The stated minimum coverage requirement is the minimum if no significant indications are found. However, the Examination Acceptance criteria in Section 5 require that additional coverage must be achieved in the same outage if significant flaws are found. This contingency should be considered for inspection planning purposes.

Table 5-2 of MRP-227, Revision 1 is then updated as shown below to reflect that the core support column inspection is now an Expansion component inspection and will be expanded to 100% should an indication be found in the 25% population.

Primary Item	Applicability	Examination Acceptance Criteria (Note 1)	Expansion Link(s)	Expansion Criteria	Expansion Item Examination Acceptance Criteria
Core Support Barrel Assembly Middle Girth Weld (MGW)	All plants	Visual (EVT-1) examination. The specific relevant condition is a detectable crack-like surface indication.	Middle Axial Weld (MAW) Lower Axial Weld (LAW) Core Support Columns	The confirmed detection of a surface-breaking linear indication in the MGW shall require that the inspection coverage of the MGW be extended to include 100% of the accessible length during the same outage. The confirmed detection and sizing of a surface-breaking indication with a length greater than two inches in the MGW shall require that the inspection be expanded to include the MAW and LAW by the completion of the next refueling outage. The confirmed detection of a surface-breaking linear indication in the MGW shall require examination of 25% (of the total of both visible and non-visible as seen from above the core support plate) of the core support columns assemblies by the completion of the next refueling outage.	The specific relevant condition for the expansion lower cylinder axial welds is a detectable crack-like surface indication. The specific relevant condition for the core support columns welds is a disruption or discontinuity in the surface of the weld. The specific relevant condition for the core support columns viewed from above the core support plate is missing or separated welds, or fractured, misaligned or missing columns.

Table 4-6 of MRP-227, Revision 1 is then updated as shown below to note that the lower support column bodies Expansion inspection will be expanded to 100% should an indication be found in the 25% population by addition of Note 3 to the table.

Lower Support Assembly W4.4.Lower support column bodies (both cast and non-cast)	All plants	Cracking (IASCC) Aging Management (IE)	W4.Lower Girth Weld (LGW)	Visual (VT-3) examination. Re-inspection every 10 years following initial inspection.	25% of the total number of column assemblies (both visible and non-visible from above the lower core plate) using a VT-3 examination from above the lower core plate. (Note 3) See Figure 4-23.

3. The stated minimum coverage requirement is the minimum if no significant indications are found. However, the Examination Acceptance criteria in Section 5 require that additional coverage must be achieved in the same outage if significant flaws are found. This contingency should be considered for inspection planning purposes.

3.3 Response to NRC RAI 10

3.3.1 NRC Question

In Table 4-2, for Item C12., "Lower Support Structure – Deep Beams," and Table 4-5,

Item C5.4., "Lower Support Structure - Lower Core support Beams," the examination coverage has been changed to 25 percent of the total number of beam-to-beam welds. The examination coverage in MRP-227-A for the Lower Support Structure - Deep Beams does not specify a percentage of beam-to-beam welds that must be examined, but it is implied that 100 percent of the welds should be examined. The examination coverage in MRP-227-A for the lower core support beams is 100 percent of accessible surfaces. Because both components are high consequence of failure components, the NRC staff is concerned that the reduced examination coverage is insufficient to ensure functionality of the components.

The NRC staff therefore requests the following information:

a. Provide a justification for the reduction in coverage for these two items. The technical justification for the reduction in examination coverage should provide reasonable assurance that (1) the functionality of the components will be maintained and (2) the structural integrity of the components will be maintained to ensure safe shutdown of the reactor during the PEO.

b. What expansion to the remaining beam-to-beam welds will be conducted if degradation is found in the initial 25 percent inspection sample?

3.3.2 Industry Response

a. Item C12: Lower Support Structure – Deep Beams:

Per MRP-227, Revision 1, the deep beams are only applicable to the CE plants with welded core shrouds assembled from full-height shroud plates. The deep beams are located directly beneath the core and the fuel assemblies sit on top of the beams. Figure 1 shows an approximate sketch of the deep beams (the same figure was included in MRP-227-A). The circles labeled "1" and "2" are the fuel alignment pins that interface with the fuel assemblies. The arrow labeled "3" points to one of the joints between the beams that make up the assembly. A full-penetration weld is located at each of these joint locations. These are the welds that are included in the Primary component inspection requirement of CE Item C12. The previous coverage requirement under MRP-227-A included all of the beam welds and required EVT-1 inspection of the top 4 inches of each weld. The coverage requirement under MRP-227, Revision 1 is to examine 25% of the total number of beam-to-beam welds, with the coverage including the top 4 inches of each weld. There is one full-penetration weld at each beam –to-beam intersection in the structure. Between 150 and 200 of these intersections/welds are expected to be accessible for the inspection, so the 25% coverage will include approximately 35 to 50 welds. At each location, this inspection

includes both sides of the weld, since they are full penetration welds and it is unknown which side would be more susceptible to degradation.

From the standpoint of likelihood of degradation, the applicable degradation mechanisms for these welds are fatigue and irradiation embrittlement (IE). The dose on the welds is highest at the top, hence the requirement to inspect the top 4 inches, and also higher toward the core centerline and lowest at the outer edges, radially. Similar to what was found for core support columns in the work supporting PWROG-14048-NP [8], the stress is expected to be highest near the outer edges, radially, of the assembly. This is due to the effects of thermal expansion. Because of these stress and radiation distributions, it is not clear where the most likely place for degradation to initiate is located. Thus, it is considered best to require the inspected locations be spread evenly across the deep beam structure to sample a variety of stress-dose combinations. Further, the welds included in the inspected sample should be different at each inspection interval, as possible within the constraints of accessibility and past inspection coverage.

The function of the deep beams is to directly support the core, to keep the fuel in place and to maintain alignment for control element assembly insertion. From the standpoint of functionality, the welded array is a redundant structure. If one weld of a cross-beam fails completely, the other end of that particular beam would still be attached to another main beam. The main beams are welded at multiple locations and would require multiple weld failures to compromise function. Assurance of the continued functionality of the deep beams is also aided by the fact that the onset of the loss of structural functionality would be likely to be first detected during fuel loading or unloading conducted during each refueling outage. The fuel loading and unloading operations are expected to detect this loss of functionality as misaligned fuel assemblies or abnormal difficulty with removing or placing fuel assemblies.

Given the number of individual welds that will be inspected for potential degradation, the redundancy in the deep beam structure, the monitoring for loss of function through fuel loading and unloading, and the applicability of the sampling approach described in MRP-227, reducing the inspections to 25% of the welds will provide adequate coverage to detect the onset of failures of significance. The reduced inspection coverage requirement of MRP-227, Revision 1 is justified for the Item C12: Deep Beams. Note that the coverage requirement will be modified to require that the inspection be spread out across the structure and be performed on different sets of welds after each inspection interval. The text for the "Examination Coverage" column of Table 4-2 in MRP-227, Revision 1 will be revised as follows:

> Examine 25% of the total number of beam-to-beam welds. Coverage on each weld examined includes the top four inches of the weld in the vertical orientation. The inspection coverage must be evenly distributed across the deep beam structure.
>
> - Note 7 will be added to the Examination Coverage of the table entry: "7. Inspections subsequent to the first 25% sampling inspection must cover weld length that was not inspected during previous examinations. A minimum of 20% out of the 25% inspection coverage of each subsequent inspection must include previously un-

inspected weld length as possible within the limitation of the remaining accessible un-inspected weld."

- Note 8 will also be added to the Examination Coverage of the table entry: "8. Justification that adequate distribution of the inspection coverage has been achieved can be based on geometric or layout arguments. For example, since each rectangular axial compartment in the structure has four welds around it, which are shared with the adjacent compartments on two sides, the inspection coverage could consist of the selection of one weld from every second compartment in the structure."

Item C5.4, "Lower Support Structure - Lower Core support Beams"

Item C5.4 is applicable to all CE plants except those with welded core shrouds assembly with full-height core shroud plates. These beams are located at the bottom of the core barrel directly beneath the core support columns (see Figure 4-35 in MRP-227, Revision 1). The beams function to support the core support columns which in turn support the core support plate which supports the fuel.

The lower core support beams are redundant components similar to the core support columns. The evaluation documented in PWROG-14048-NP showed that greater than 50 percent of the core support columns could be degraded without a loss of function. Since the lower core support beams provide the structure to support the core support columns, it is expected that a similar level of degradation could be tolerated in the beams. This margin to loss of function provides the technical justification for the reduced inspection coverage requirement of MRP-227, Revision 1.

It must also be noted that the location and geometry of the lower core support beams presents significant challenges to achieving higher coverage levels. Increased coverage levels such as 75% or 100% are likely not attainable.

b. If degradation is found in the initial 25 percent inspection population, the examination would be expanded to include the remaining beam-to-beam welds. The deep beam line item in Table 4-2 of MRP-227, Revision 1 will be updated to include the reference to the existing Note 6 in the table, which specifies that the stated coverage requirement is the minimum if no significant indications are found.

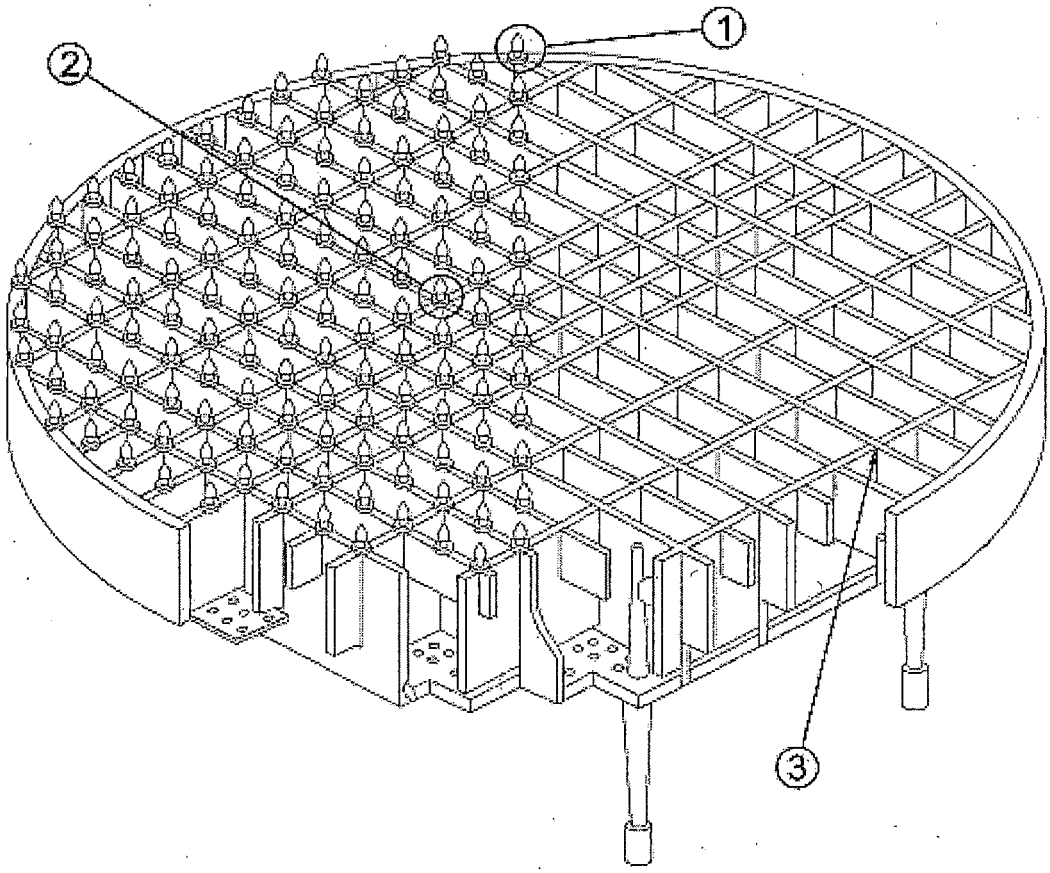

Figure 1: Approximate schematic sketch of the deep beam structure (figure from MRP-227-A)

Table 4-2 of MRP-227, Revision 1 will be updated as shown below to reflect this change.

Primary Item	Applicability	Effect (Mechanism)	Expansion Link (Note 1)	Examination Method/Frequency (Note 1)	Examination Coverage
C12.Lower Support Structure Deep beams	Only plants with welded core shrouds assembled with full-height shroud plates	Cracking (Fatigue) that results in a detectable surface-breaking indication in the welds or beams. Aging Management (IE)	None	Enhanced visual (EVT-1) examination, no later than 2 refueling outages from the beginning of the license renewal period. Subsequent examination on a ten-year interval, if adequacy of remaining fatigue life cannot be demonstrated.	Examine 25% of the total number of beam-to-beam welds. Coverage on each weld examined includes the top four inches of the weld in the vertical orientation. The inspection coverage must be evenly distributed across the deep beam structure. (Notes 6, 7 and 8) See Figure ~~4-34~~4-33.

7. Inspections subsequent to the first 25% sampling inspection must cover weld length that was not inspected during previous examinations. A minimum of 20% out of the 25% inspection coverage of each subsequent inspection must include previously un-inspected weld length as possible within the limitation of the remaining accessible un-inspected weld.
8. Justification that adequate distribution of the inspection coverage has been achieved can be based on geometric or layout arguments. For example, since each rectangular axial compartment in the structure has four welds around it, which are shared with the adjacent compartments on two sides, the inspection coverage could consist of the selection of one weld from every second compartment in the structure.

Table 5-2 of MRP-227, Revision 1 is updated as follows to reflect the expansion of the deep beams to 100% of the component population if degradation is observed in the initial exam.

Primary Item	Applicability	Examination Acceptance Criteria (Note 1)	Expansion Link(s)	Expansion Criteria	Expansion Item Examination Acceptance Criteria
Lower Support Structure Deep beams	Only plants with welded core shrouds assembled with full-height shroud plates	Visual (EVT-1) examination. The specific relevant condition is a detectable crack-like indication.	~~None~~ Remaining deep beams	~~N/A~~ Confirmed evidence of a detectable crack-like indication in one or more of the deep beams examined in the 25% population selected for the Primary component inspection shall require the inspection coverage to be expanded to the remaining deep beams by the completion of the next refueling outage.	~~N/A~~ The specific relevant condition is a detectable crack-like indication.

3.4 Response to NRC RAI 12

3.4.1 NRC Question

In Table 4-5, for plant designs with core shrouds assembled with full-height shroud plates, the core shroud assembly, remaining axial welds, ribs and rings has been split into two items: C3.1, "Remaining axial welds," and C3.2, "Ribs and rings." The coverage for these two items is different, 75 percent for the remaining axial weld length and adjacent base metal as visible from the core side of the shroud other than that already inspected under the primary link, and 25 percent of the Ribs and rings. Also, in MRP-227, Rev. 1, Core Shroud Assembly (Welded) Item C2.1, "Remaining Axial Welds," is a new expansion component applicable to plant designs with core shrouds assembled in two vertical sections. The coverage for Item C2.1 is the same as for Item C3.1. In MRP-227-A, the coverage for the axial welds, ribs and rings was "axial welds seams" other than the core shroud reentrant corner welds at the core mid-plane, plus ribs and rings. Although the extent of coverage required has been quantified, no justification is provided for the examination coverages for the remaining axial welds, or the ribs and rings.

Also, in Figure 4-37, it is not clear if the core shroud assembly can be removed from the core support barrel assembly to allow examination of the ribs and rings.

a. For Item C2.1 and 3.1, does 75 percent of the remaining axial weld length for the remaining axial welds mean a minimum of 75 percent of the total accessible plus inaccessible length of these welds must be examined to claim examination credit?

b. Justify the 25 percent sample size for the ribs and rings (Item C3.2).

c. Clarify whether the ribs and rings are accessible for visual examination.

3.4.2 Industry Response

a. For the expansion inspection of the core shroud assembly ribs and rings, the statement "75% of the remaining axial weld length and adjacent base metal as visible from the core side of the shroud other than that already inspected under the primary link," specifically refers to 75% of the un-inspected weld length that is visible on the core side of the shroud. This is the high fluence side of the weld. This includes both the accessible and inaccessible portions of the weld length on the core side of the shroud plates; though, it is expected that most if not all of the weld length on the core side will be accessible to the EVT-1 examination.

b. Per the response to part C of this question, it has been determined that the ribs and rings for the CE plants with welded core shrouds assembled with full-height core shroud plates are inaccessible given the current inspection technology available. Consistent with other inaccessible Expansion component items in MRP-227, Revision 1, the examination method/frequency and examination coverage of the ribs and rings in Table 4-5 will be modified as shown in the revised table below. Justification based on an evaluation or some other approach would be required if this expansion inspection is triggered from the primary component inspection of the shroud plates (welded assemblies). The evaluation to perform this justification or determine the alternate

approach must be completed by the end of the next refueling outage after the expansion criteria of the primary component are triggered.

c. The ribs and rings are not accessible given current inspection capabilities. Accessibility to this component is limited to the gap between the core shroud top plate and the core support barrel, which is nominally a 3/16" gap. In lieu of an inspection, an evaluation must be completed that justifies that the aging effects of the component do not adversely affect its ability to perform its function, or the component shall be replaced. This is consistent with other MRP-227 components that have been determined to be inaccessible.

Table 4-5 of MRP-227, Revision 1 will be updated as shown below:

Expansion Item	Applicability	Effect (Mechanism)	Primary Link (Note 1)	Examination Method/Frequency (Note 1)	Examination Coverage
Core Shroud Assembly (Welded) C3.1.Remaining axial welds, C3.2.Ribs and rings	Only plants with welded core shrouds assembled with full-height shroud plates	Cracking (IASCC), Aging Management (IE)	C3.Shroud plates of welded core shroud assemblies	Remaining axial welds: Enhanced visual (EVT-1) examination. Re-inspection every 10 years following initial inspection. Ribs and rings: No examination requirements. Justify by evaluation or by replacement.	Remaining axial welds: 75% of the remaining axial weld length and adjacent base metal as visible from the core side of the shroud other than that already inspected under the primary link. ~~25% of the ribs and rings.~~ Ribs and rings: Inaccessible. See Figure ~~4-38~~ 4-37.

3.5 Response to NRC RAI 16

3.5.1 NRC Question

In MRP-227, Rev.1, Table 4-2, several CE Primary components state under "Examination Method/Frequency," "If screening for fatigue cannot be satisfied by plant-specific evaluation, enhanced visual (EVT-1) examination, no later than 2 refueling outages from the beginning of the license renewal period. Subsequent examination on a ten-year interval." The language for the corresponding components in MRP-227-A for "Examination scope/frequency" stated "If fatigue life cannot be demonstrated by time-limited aging analysis (TLAA), enhanced visual (EVT-1) examination, no later than 2 refueling outages from the beginning of the license renewal period. Subsequent examination on a ten-year interval."

The components subject to the fatigue screening are C7., "Core Support Barrel Assembly – CSB [Core Support Barrel] Flexure Weld (CSBFW)," C9., "Lower Support Structure – Core Support Plate," and C10., "Upper Internals Assembly – Fuel Alignment Plate." Also, in Table 4.2, for Item C7., SCC has been added as a degradation mechanism yet the examination method allows examination to be avoided provided the item passes a screening for fatigue.

Therefore, the NRC staff requests that EPRI:

a. Define and justify the criteria that are to be used for screening for fatigue. Is a specific cumulative usage factor (CUF) value used as a screening criterion? Are environmental effects to be considered? If so, how are environmental effects to be included in the evaluation? EPRI should also discuss whether such a criterion should be added to Table 4-2.

b. Justify how fatigue screening accounts for possible SCC contributions for Item C.7? Is additional evaluation or inspection of the CSBFW needed to address possible SCC?

3.5.2 Industry Response

a. The fatigue screening criterion that is provided in MRP-175, Revision 0 [11], which was used in the development of MRP-227-A, is applied for screening for fatigue. MRP-175, Revision 0 utilizes a screening CUF of 0.1 at 40 years, which was intended to address potential environmental effects. Since environmental effects were considered in the MRP-175 screening, there is not a need to add a separate criterion related to it in Table 4-2 of MRP-227, Revision 1.

b. Regarding the degradation mechanisms of the core support barrel flexure weld (CSBFW), fatigue screening does not account for possible contributions from SCC. Provided that the component does not screen-in for fatigue, an inspection would need to be performed to confirm there is no material degradation resulting from SCC. Otherwise, an evaluation could be performed, using plant-specific or bounding information, in place of inspecting the CSBFW for effects of SCC. MRP-227, Revision 1 will be updated as shown below to reflect this item.

Table 4-2 of MRP-227, Rev. 1 is updated as follows:

Primary Item	Applicability	Effect (Mechanism)	Expansion Link (Note 1)	Examination Method/Frequency (Note 1)	Examination Coverage
C7.Core Support Barrel Assembly CSB Flexure Weld (CSBFW)	All plants with welded core shrouds	Cracking (Fatigue, SCC)	None	If screening for fatigue cannot be satisfied by plant-specific evaluation, perform enhanced visual (EVT-1) examination, no later than 2 refueling outages from the beginning of the license renewal period. Subsequent examination on a ten-year interval. If the CSB Flexure Weld screens out for fatigue, SCC must still be considered. This can be accomplished by performing an evaluation using plant-specific or bounding information, or by performing the inspection as prescribed above.	Examination coverage to be defined by evaluation to determine the potential location and extent of fatigue cracking. See Figure 4-30.