REGULATORY INFORMATION DISTRIBUTION SYSTEM (RIDS)

MAY

ACCESSION NBR:8308290378 DOC.DATE: 83/08/22 NOTARIZED: NO DOCKET #
FACIL:50-410 Nine Mile Point Nuclear Station, Unit 2, Niagara Moha 05000410
AUTH.NAME AUTHOR AFFILIATION
RHODE,G.K. Niagara Mohawk Power Corp.
RECIP.NAME RECIPIENT AFFILIATION
SCHWENCER,A. Licensing Branch 2

SUBJECT: Requests approval of alternative method of meeting Reg Guide 1.63 guidelines re installation of containment electrical penetrations.Electrical penetration assemblies bolted to liner nozzles as shown on encl figures.

DISTRIBUTION CODE: B001S COPIES RECEIVED:LTR 1 ENCL 1 SIZE: 6
TITLE: Licensing Submittal: PSAR/FSAR Amdts & Related Correspondence

NOTES:PNL 1cy FSAR'S & AMDTS ONLY. 05000410

	RECIPIENT ID CODE/NAME	COPIES LTTR	COPIES ENCL	RECIPIENT ID CODE/NAME	COPIES LTTR	COPIES ENCL
	NRR/DL/ADL	1	0	NRR LB2 BC	1	0
	NRR LB2 LA	1	0	HAUGHEY,M 01	1	1
INTERNAL:	ELD/HDS3	1	0	IE FILE	1	1
	IE/DEPER/EPB 36	3	3	IE/DEPER/IRB 35	1	1
	IE/DEQA/QAB 21	1	1	NRR/DE/AEAB	1	0
	NRR/DE/CEB 11	1	1	NRR/DE/EHEB	1	1
	NRR/DE/EQB 13	2	2	NRR/DE/GB 28	2	2
	NRR/DE/MEB 18	1	1	NRR/DE/MTEB 17	1	1
	NRR/DE/SAB 24	1	1	NRR/DE/SGEB 25	1	1
	NRR/DHFS/HFEB40	1	1	NRR/DHFS/LQB 32	1	1
	NRR/DHFS/PSRB	1	1	NRR/DL/SSPB	1	0
	NRR/DSI/AEB 26	1	1	NRR/DSI/ASB	1	1
	NRR/DSI/CPB 10	1	1	NRR/DSI/CSB 09	1	1
	NRR/DSI/ICSB 16	1	1	NRR/DSI/METB 12	1	1
	NRR/DSI/PSB 19	1	1	NRR/DSI/RAB 22	1	1
	NRR/DSI/RSB 23	1	1	REG FILE 04	1	1
	RGN1	3	3	RM/DDAMI/MIB	1	0
EXTERNAL:	ACRS 41	6	6	BNL(AMDTS ONLY)	1	1
	DMB/DSS (AMDTS)	1	1	FEMA-REP DIV 39	1	1
	LPDR 03	1	1	NRC PDR 02	1	1
	NSIC 05	1	1	NTIS	1	1
NOTES:		1	1			

TOTAL NUMBER OF COPIES REQUIRED: LTTR 54 ENCL 47

50-410

NIAGARA MOHAWK POWER CORPORATION

NIAGARA MOHAWK

300 ERIE BOULEVARD WEST
SYRACUSE, N.Y. 13202

GERALD K. RHODE
SENIOR VICE PRESIDENT

August 22, 1983
(7229)

Mr. A. Schwencer, Chief
Licensing Branch No. 2
Division of Licensing
Office of Nuclear Reactor Regulation
U.S. Nuclear Regulatory Commission
Washington, DC 20555

Dear Mr. Schwencer:

This letter requests Nuclear Regulatory Commission approval of an alternative method of meeting the guidance provided in Regulatory Guide 1.63 regarding installation of the containment electrical penetrations for Nine Mile Point Nuclear Station-Unit 2.

Final Safety Analysis Report Section 1.8 currently states that Nine Mile Point-Unit 2 complies with Regulatory Guide 1.63. This regulatory guide endorses IEEE-317 with certain clarifications. IEEE-317 states that electrical penetration assemblies shall be installed, inspected and tested in accordance with ASME Boiler and Pressure Vessel Code, Section III, Subsection NE, for Class MC components. The ASME requirements include a "N" stamp for welded and mechanically attached components.

For Nine Mile Point-Unit 2, the installation of electrical penetrations would be performed under the Stone & Webster Engineering Corporation Quality Assurance Program for Category I components. The electrical penetration assemblies are bolted to the liner nozzles as shown on the attached figure. Due to the dates of order and fabrication, the liner nozzles were not required to be "N" stamped. Therefore, an ASME III program for installing these electrical penetrations is not warranted since the containment to which the penetrations will be bolted is not an N-stamped component. Installation based on the manufacturer's recommendations, in process surveillance, final visual inspection and leak rate testing performed in conformance to the Stone & Webster Engineering Corporation Quality Assurance Program will provide a high degree of assurance appropriate for the penetrations.

B001
1/1

8308290378 830822
PDR ADOCK 05000410
A PDR

The installation program will ensure that the containment electrical penetrations are properly installed and fully capable of performing their intended function. The alternative method will be included in an amendment to the Final Safety Analysis Report following approval of this proposed change by the Nuclear Regulatory Commission.

Very truly yours,

G. K. Rhode
Senior Vice President

GKR/MS:ja

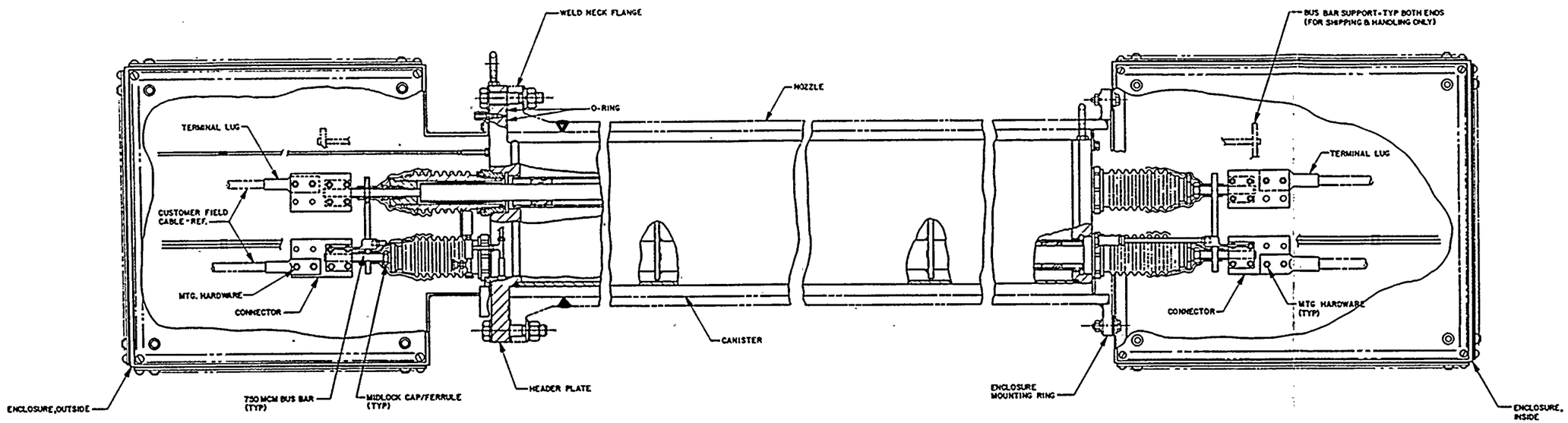

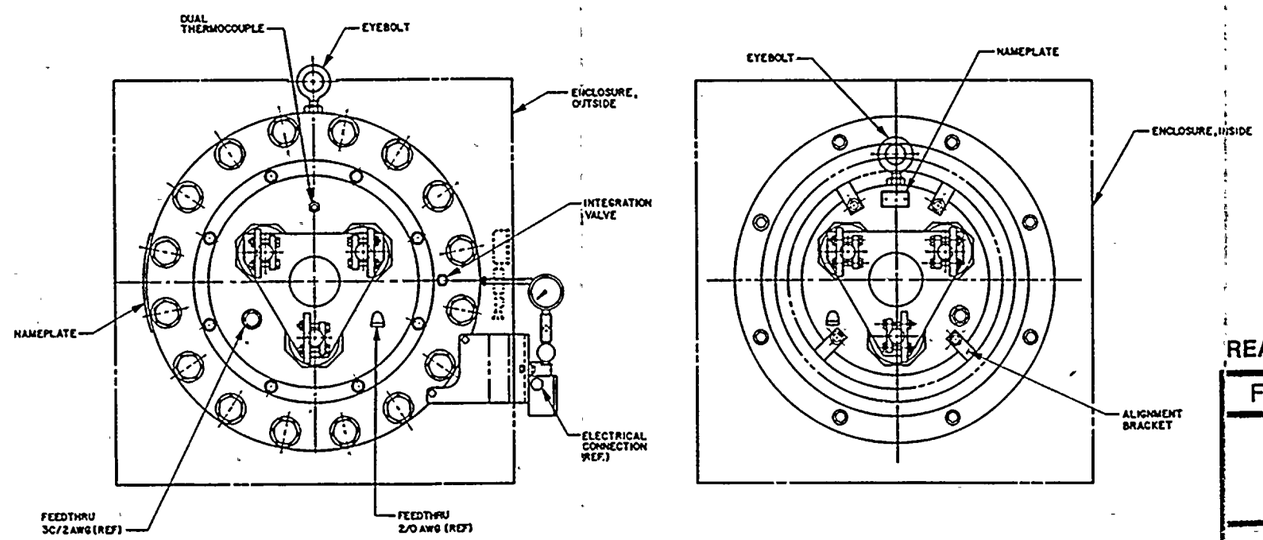

PRC APERTURE CARD

Also Available On Aperture Card

REACTOR AUXILIARY BUILDING

FIGURE 8.3-8

ELECTRICAL PENETRATIONS
MEDIUM VOLTAGE (TYPICAL)
SHEET 1 OF 2

NIAGARA MOHAWK POWER CORPORATION
NINE MILE POINT-UNIT 2
FINAL SAFETY ANALYSIS REPORT

8308290378-01

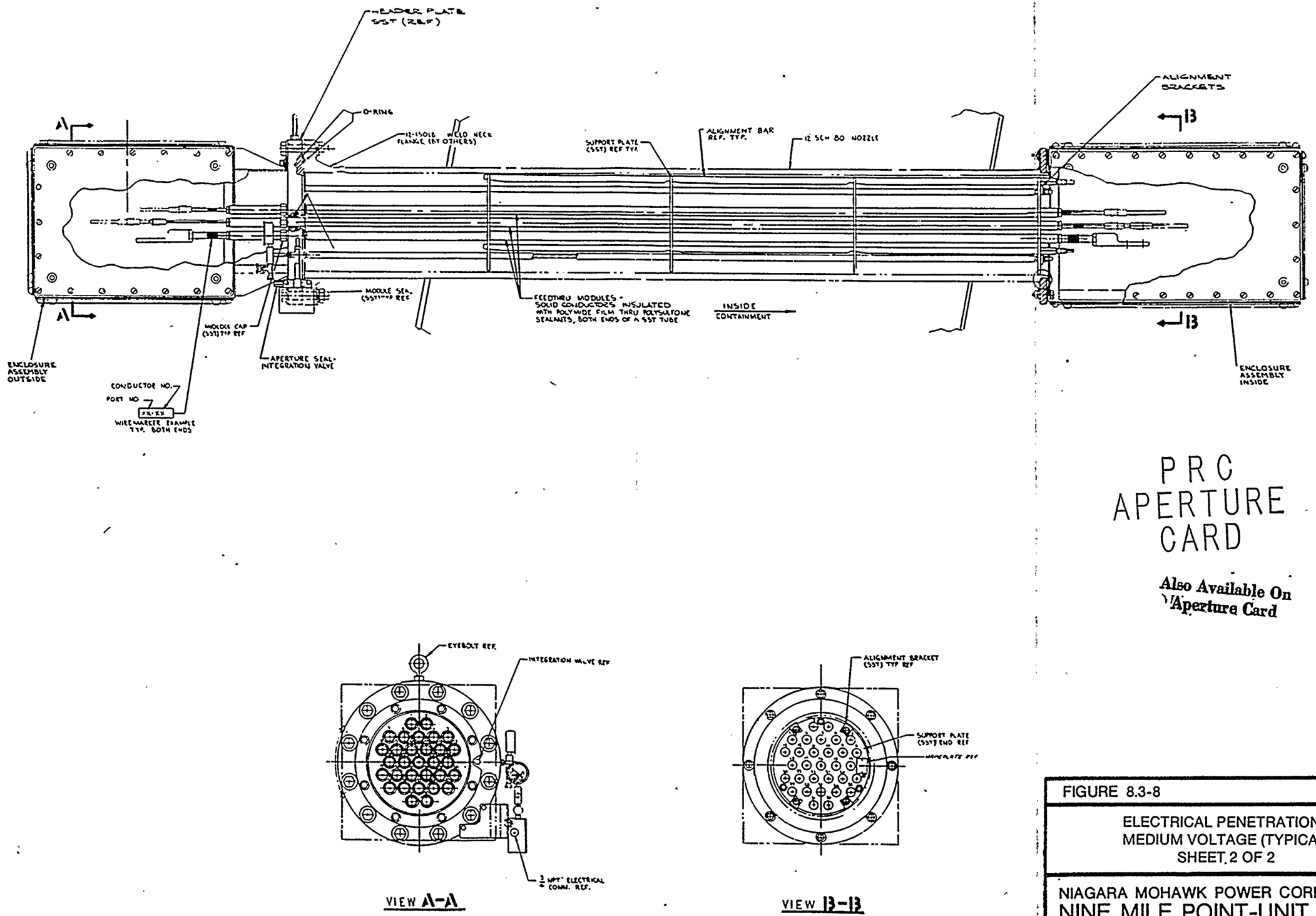

PRC APERTURE CARD

Also Available On Aperture Card

FIGURE 8.3-8

ELECTRICAL PENETRATIONS
MEDIUM VOLTAGE (TYPICAL)
SHEET 2 OF 2

NIAGARA MOHAWK POWER CORPORATION
NINE MILE POINT-UNIT 2
FINAL SAFETY ANALYSIS REPORT

8308290378-02