J.O.No. 12177

HIGH ENERGY LINE BREAK (HELB)
EVALUATION REPORT
(EFFECT ON NONSAFETY-RELATED CONTROL COMPONENTS)
NINE MILE POINT - UNIT 2
NIAGARA MOHAWK POWER CORPORATION
SCRIBA, NEW YORK

Revision 2

Date: February 1986

8603070341 860303
PDR ADOCK 05000410
A PDR

TABLE OF CONTENTS

Section	Title	Page
1.0	INTRODUCTION	1
1.1	PURPOSE	1
1.2	SCOPE OF STUDY	1
1.3	SUMMARY	1
2.0	METHODOLOGY	1
2.1	SYSTEM ELIMINATION	2
2.2	COMPONENT ELIMINATION	3
2.3	HIGH ENERGY PIPE CRITERIA	4
2.4	ZONE DETERMINATION	4
2.5	PIPE BREAK LOCATION AND EFFECTS	6
2.6	PLANT WALKDOWN	7
2.7	HELB ZONE ANALYSIS	8
3.0	DISCUSSION	9
4.0	CONCLUSIONS AND RECOMMENDATIONS	12
5.0	REFERENCE DOCUMENTS	13

APPENDICES

A	SYSTEMS LIST	A-1
B	COMPONENT LIST AND FUNCTIONS	B-ABN175
C	LIST OF HIGH ENERGY LINES	C-A-01
D	DETAILED ANALYSIS	D-PC-1

FIGURES

1	ZONE MAPS - TURBINE BUILDING AND REACTOR BUILDING, EL 306 FT 0 IN.
2	ZONE MAPS - TURBINE BUILDING AND REACTOR BUILDING, EL 289 FT 0 IN.
3	ZONE MAPS - REACTOR BUILDING, EL 261 FT 0 IN., TURBINE BUILDING, EL 250 FT 0 IN.
4	ZONE MAPS - TUNNELS
5	ZONE MAPS - REACTOR BUILDING, EL 175 FT 0 IN., 196 FT 0 IN., 215 FT 0 IN.
6	ZONE MAPS - REACTOR BUILDING, EL 240 FT 0 IN., 328 FT 0 IN., 353 FT 0 IN.

1.0 INTRODUCTION

1.1 PURPOSE

The purpose of this study was to verify that the effects of any high energy line break (HELB) on any nonsafety-related control systems in Nine Mile Point - Unit 2 (NMP2) do not result in an event more severe than the events analyzed in Chapter 15 of the NMP2 Final Safety Analysis Report (FSAR). This study responds to concerns expressed in the NMP2 Safety Evaluation Report Section 7.7.2.2 and to NMP2 FSAR Question F421.43.

1.2 SCOPE OF STUDY

The scope of this HELB analysis was restricted to HELBs and their impact on those components of nonsafety-related control systems which could initiate a reactor transient. A list of such components was developed based on the system elimination criteria presented in Section 2.1 and the component elimination criteria identified in Section 2.2 of this report. HELB zones containing both control systems components of interest and HELB locations were defined using the appropriate Equipment Qualification Environmental Design Criteria (EQEDC) zone maps as a guide, as described in Section 2.4 of this report. Each HELB zone was analyzed, the results summarized, and final conclusions and recommendations are presented in Section 4.0.

1.3 SUMMARY

A systematic study has been conducted to determine the consequences of postulated HELBs and their effects on nonsafety-related control system components located in the affected zone. The detailed analysis (Appendix D) describes each of the postulated HELB events and their limiting effects on the reactor parameters. The detailed analysis in Appendix D is summarized in Section 4.0. With the exception of the loss of feedwater heating exacerbated by a turbine trip, the effects of the postulated HELB/control systems failure events are less severe than the Unacceptable Results for Incidents of Moderate Frequency - Anticipated Operational Transients presented in FSAR Chapter 15. Those events caused by break of reactor coolant pressure boundary (RCPB) piping are bounded by the limiting fault events described in Chapter 15. It is concluded that safe reactor shutdown is ensured for all events postulated herein, and the consequences of these events do not result in any significant risk to the health and safety of the public.

2.0 METHODOLOGY

The following criteria and assumptions were used to develop the scope of work for the subject HELB analysis:

1. Identify all nonsafety control systems and components which could impact the critical reactor parameters (e.g., water level, pressure, critical power ratio).

2. Identify high energy lines and their postulated break locations and evaluate consequences.

3. Identify the plant zones which contain both HELB locations and control system components determined in Item 1 above.

4. Postulate pipe breaks in each of the zones defined, determine which control system components are affected, and analyze the consequences of failure of the control system components.

5. Combine the effects of the HELB with potential, simultaneous malfunctions of control system components in the postulated HELB zone and determine the effects on the critical reactor parameters.

6. Verify that the effects on critical reactor parameters are enveloped by the analyses in Chapter 15 of the FSAR.

7. Identify any postulated events that are beyond Chapter 15 analyses and recommend corrective actions.

2.1 SYSTEM ELIMINATION

All nonsafety-related control grade systems which may affect the critical reactor parameters have been included in the HELB analysis, and the following elimination criteria were applied to exclude some of the systems from further analysis.

Elimination Criteria	Basis
N1	Nonelectrical systems, i.e, mechanical and structural systems comprised only of structural steel, piping, tanks, cranes, and similar equipment.
N2	Instrumentation systems with no direct or indirect controlling function, such as the annunciator system. Instrumentation and dedicated inputs to the process computer, as well as the computer itself, are excluded.
N3	Control systems that interface or interact with the reactor operating system but have no direct or indirect effect on reactor parameters, such as ventilation systems.

N4 Control systems that do not interact or interface with reactor operation or reactor parameters either directly or indirectly, such as communications, lighting, etc.

N5 Systems which are used only during startup, shutdown or refueling mode.

N6 Electrical systems and components involved in power distribution or transformation the loss of which will not impact the reactor parameters or safety system performance.

N7 All safety-related systems or safety-related portions of control systems.

A list of all systems with the elimination criteria identified is included in Appendix A.

2.2 COMPONENT ELIMINATION

Instruments and components for those systems which are eliminated under system elimination criteria are excluded from the list of plant components.

The following elimination criteria are applied to the remaining components to arrive at the final list of components considered in the detailed HELB analysis. The appropriate system piping and instrumentation diagrams and elementary diagrams have been used to aid in this elimination.

1. Mechanical components (e.g., structural steel, tanks, pipes, valves) are not considered control systems components subject to failure. However, instrument taps and tubing for components of interest, which may be physically located on mechanical components, are included.

2. Instruments and other dedicated inputs to the process computer are eliminated.

3. Components that provide only position status information and do not perform any control function are eliminated. This includes position switches on air- and motor-operated valves which are not interlocked with other equipment.

4. Components that provide only indication and/or inputs for alarms or recording devices are eliminated.

In general, initiating type control components, such as elements, switches, transmitters, controllers, and converters, are included in the detailed HELB analysis, along with their related taps and process tubing. Motor control centers (MCC) in the affected zones were considered as components subject to failure and were

reviewed for MCC-mounted control components or power supply to components of interest. No nonsafety grade control system component in this analysis is mounted in or powered directly from an MCC, and MCCs were, therefore, eliminated.

A list of components which have been considered for analysis based on the above criteria and their control functions are included in Appendix B.

2.3 HIGH ENERGY PIPE CRITERIA

The criteria for determining high energy lines used in the study were based on criteria established in Section 3.6 of the NMP2 FSAR. High energy piping is defined as those fluid systems that during normal plant conditions, either are in operation or are maintained pressurized under conditions where either or both of the following are met:

1. Maximum operating temperature exceeds 200°F

2. Maximum operating pressure exceeds 275 psig

Those high energy lines that operate above these limits for less than 2 percent of the time and are required to perform their intended function are classified as moderate energy lines and, therefore, are excluded from the scope of this study. Piping whose diameter is 1-in. NPS or smaller is also excluded.

A list of all the high energy lines considered for this analysis is included in Appendix C.

2.4 ZONE DETERMINATION

For the purpose of this analysis, the EQEDC zone map was used for identifying normal operating environmental zones. These EQEDC zones were subdivided into HELB zones which are open areas bounded by walls, ceiling, floors, etc. Each HELB zone is uniquely identified. Certain HELB zones extend between elevations because some floor elevations consist of open grating or a hoist opening is common to all the floors.

The turbine enclosure is divided into discrete zones with unique identification. A HELB event in a small cubicle can conceivably blow out the door and the pressure/temperature transient may fail all nonsafety grade instruments in the adjoining larger volume zone. However, a pipe break in a large-volume zone will not impact its neighboring cubicled zone because the larger volume and more outlets associated with it provide easier alternate paths of energy dissipations. These considerations have been factored into this analysis by combining the following zones:

1. Zones D and A combined for a break in Zone A
2. Zones AB and A combined for a break in Zone A
3. Zones D and B combined for a break in Zone B
4. Zones D and C combined for a break in Zone C
5. Zones AC and AB combined for a break in Zone AB
6. Zones AD and AB combined for a break in Zone AB
7. Zones AB and AC combined for a break in Zone AC
8. Zones AB and AD combined for a break in Zone AD
9. Zones C and B combined for a break in Zone B
10. Zones S and C combined for a break in Zone C
11. Zones D and N combined for a break in Zone N
12. Zones D and P combined for a break in Zone P
13. Zones U and L combined for a break in Zone L
14. Zones D and Z combined for a break in Zone Z
15. Zones D and X combined for a break in Zone X
16. Zones D and J combined for a break in Zone J
17. Zones D and AA combined for a break in Zone AA
18. Zones D and F combined for a break in Zone F
19. Zones D and G combined for a break in Zone G
20. Zones D and H combined for a break in Zone H
21. Zones D and W combined for a break in Zone W
22. Zones S and R combined for a break in Zone R
23. Zones A and MS Tunnel combined for a break in MS Tunnel
24. Zones B and MS Tunnel combined for a break in MS Tunnel
25. Zones C and MS Tunnel combined for a break in MS Tunnel
26. Zones S and AE combined for a break in AE
27. Zones AF and AE combined for a break in AE
28. Zones S and AF combined for a break in AF

Zone Y does not contain high energy lines and is not affected by high energy line breaks in other zones. Therefore, this zone is not analyzed.

Zone maps are provided in Figures 1 through 6 at the end of the report.

The sacrificial approach used throughout the analysis assumed that any HELB within a defined zone would impact all control system components in the zone. Because of the large area covered by Zone D, the potential impact of a line break was further analyzed to verify if a break at one end of the turbine building can realistically fail nonsafety grade components located at the other end with intervening barriers, such as pipes, tray supports, turbine casing, etc. It was determined that in the condenser (Zone B) and heater bay areas (Zones F, G, and H), a pipe break may affect the components in only a confined portion of an "architecturally" defined zone. While the distance between the postulated high energy line break and control components precludes the possibility of physical damage to components due to direct pipe whip and jet impingement, the bays allow for the adverse environment associated with the break to spread throughout the condenser or heater bay, minimizing the environmental effects.

Therefore, even though no air/steam/water boundary exists in the condenser and heater bay areas, the above consideration has been used in the analysis of Zone D and the sacrificial approach applied within the confines of the zone determined above.

For the reactor building/secondary containment, a list of the nonsafety components which affect the reactor parameters was made. The locations of the components were then checked to determine whether these components are affected by any HELB event in their vicinity, and the consequence of their failure was analyzed.

Reactor core isolation cooling (ICS) (steam side), reactor water cleanup (WCS), and control rod drive (RDS) system piping are the only sources of HELB events in the secondary containment which are capable of producing temperature transients resulting in failure of all nonsafety grade instruments in the zones identified in the EQEDC report. A review of the relevant drawings identified seven zones to be considered for analysis.

These zones have been treated as one zone for purposes of analysis. This was done because all zones in the secondary containment communicate with each other for environmental purposes. While the high energy lines do not pass through zones containing nonsafety-related control devices, a break in these lines may cause adverse environmental conditions in those zones which do contain nonsafety-related control devices.

All areas of the radwaste, diesel generator, normal switchgear, standby gas, screenwell, and control buildings were eliminated from analysis because the systems in these areas do not affect reactor parameters. Although the switchgear room east (Zone AE) contains high energy lines, an analysis of the electrical system equipment in this zone indicated that there are no adverse effects on reactor parameters resulting from a HELB in this zone. The auxiliary boiler building has been eliminated because it contains auxiliary steam system components, and a HELB failure can lead to a single system failure only which cannot affect reactor parameters.

2.5 PIPE BREAK LOCATION AND EFFECTS

2.5.1 Pipe Break Location

The high energy pipes identified in Appendix C are assumed to break at all locations where control systems components of interest (as defined in Section 2.2) are physically located in the same zone as the high energy piping, unless piping runs subject to high stress have been specifically identified and analyzed as a result of the studies in FSAR Section 3.6. Piping evaluated by means of previous HELB studies (see FSAR Section 3.6) is considered to break as defined in those studies. Only one pipe break is postulated to occur at any time and only during normal plant conditions. As part of the detailed analysis described in

Appendix D, the worst case combination of a specific HELB and consequential control systems failures is examined for the reactor in the limiting condition for that postulated event.

2.5.2 Pipe Break Effects

Pipe breaks and consequential control system failures are evaluated considering the effects of adverse environment, pipe whip, and jet impingement on the control system components.

1. Environmental Effects

The effects associated with any adverse environment (increasing humidity, temperature, pressure, radiation) are enveloped by employing the sacrificial approach. The sacrificial approach assumes that any HELB within the defined zone would adversely impact all control systems components in the zone. Using this approach, environmental effects are enveloped in the detailed analysis presented in Appendix D.

The turbine generator electrohydraulic system (TMB) is a high pressure, low temperature system with a limited volume of EH liquid maintained at high pressure by a small capacity pump. It is inconceivable that a pipe break in this system will incapacitate all nonsafety grade instruments in the zones of TMB system pipe routing, and an exception to the sacrificial approach in this case is considered justified. Direct jet impingement or direct pipe whip are considered as the only causes of failure for those nonsafety grade instruments that are within such bounds.

Instrument air supply line failure due to a HELB may cause the controlled component to fail in the designated safe position and, since the worst failure mode has been considered in the analysis, air tubing failure is inherently enveloped by this study.

2. Pipe Whip Considerations

Movement of a circumferentially broken pipe is assumed to occur in the direction of the jet reaction while the pipe hinges at the nearest rigid support, anchor, or penetration, producing an arc of motion. The pipe is allowed to move in an arc with a radius from the break to the hinge point, and motion is assumed to be limited by pipes of equal or greater diameter or reinforced concrete walls, floors, or columns. The whipping pipe is assumed capable of incapacitating any control systems components within the arc of motion. The sacrificial approach envelops these pipe whip considerations.

3. Jet Impingement Considerations

Jet impingement is considered for both circumferential and longitudinal breaks. The basic approach assumed is that the jet from a postulated break is sufficient to fail all impacted components within the jet cone of influence, except in those areas where major structures provide natural barriers. The sacrificial approach used in this analysis envelops these jet impingement considerations.

2.6 PLANT WALKDOWN

Plant walkdown was conducted in two phases.

Zone maps for the reactor building, turbine building, and auxiliary bays were used during a plant walkdown to accurately define appropriate zones, giving due consideration to wall heights, location and types of doors, wall openings, etc. It was assumed that the locations of the high energy lines, control components and their associated taps and tubing are correctly represented in the referenced drawings. The results of this walkdown were incorporated in Revision 0 of this study.

A subsequent plant walkdown was conducted in Phase 2 to verify the location of control systems components and assess the proximity of the components and associated taps and tubing to the high energy lines. The appropriate architectural, piping, and instrument location drawings were used for this purpose. It was determined that some control components are located in zones different from those assumed previously. Impulse and signal lines of certain components have been routed through a zone other than where the components of interest are located. Appendix D identifies such components by noting that they have been analyzed for the failure mode resulting from a break in process tubing only. It was also established that HELB in the turbine electrohydraulic system will not incapacitate any additional nonsafety grade control components of interest beyond those already included in this analysis.

All changes resulting from this walkdown have been reflected in Revision 1 of this report, and the changed areas are identified by a revision bar in the right-hand margin.

Instrument air supply line failure due to a HELB may render the controlled component to fail in the designated safe position and, since the worst failure mode has been considered in the analysis, air tubing failure is inherently enveloped by this study.

2.7 HELB ZONE ANALYSIS

The detailed analysis was performed on a zone basis. The following description is representative of the analysis performed for each HELB zone. Appendix D, which presents the details of the analysis for each zone, follows this format.

1. High Energy Systems

Under each zone, the line for each system is listed based on its function. Each high energy line was reviewed to determine the effects of a piping failure upon its own system. This is done for each high energy line or group of lines having the same function independently, since only a single pipe break is postulated as the initiating event. The effect of the break itself on reactor parameters was examined.

Due consideration has been given to interactions between adjacent zones as explained in Section 2.4.

2. Control Systems

A list was made of all control system components within the zone on a system basis. Where control components were grouped together, they have similar system failure effects. The failure mode(s) of each component or group of components and the effects of their failure were reviewed. The worst possible mode as a result of single or group of components failure has been identified in the analysis. Where the worst mode is not readily discernible, all failure modes and their consequences have been analyzed.

3. Combined Effects

The postulated piping failure for each HELB in the zone was examined in combination with the resulting worst case failures of control system components in the zone to determine whether any combination of possible failures could exacerbate the postulated HELB. The sacrificial approach was used, and the worst case combined HELB and possible consequential control system failures were defined and analyzed. The consequences of these events were compared to the accident and transient analyses presented in FSAR Chapter 15, which include discussions of a single additional active component failure to ensure that they are bounded by existing FSAR Chapter 15 analyses.

3.0 DISCUSSION OF ANALYSIS

The following conditions can occur individually or in combination as described under Combined Effects in Appendix D.

1. Turbine trip due to a loss of condenser vacuum.

2. Turbine trip due to high vibration.

3. Turbine trip due to a high water level in the moisture separator.

4. Loss of feedwater flow due to a gradual loss of condensate inventory.

5. Complete loss of feedwater.

6. Loss of one or more reactor feed pumps.

7. Partial loss of feedwater heating.

8. Loss of RCIC pump.

9. Loss of one RCS pump.

10. Feedwater controller failure - Maximum demand.

11. Combination of hypothesized conditions.

Each of these conditions is analyzed below to determine the overall consequences on reactor parameters.

1. A loss of main condenser vacuum could result either from a break in a high energy line leading to the condenser or steam jet air ejector or from a break in one of the turbine sealing steam supply lines, allowing air leakage at the low-pressure turbine shaft seals. A loss of sealing steam would produce a much more gradual loss of condenser vacuum than would a break in a line from the condenser. Both conditions would lead to a turbine trip situation, which is bounded by Chapter 15.2.5 of the FSAR.

2. A turbine trip due to high vibration as a result of water induction could also lead to a "turbine trip with bypass" situation, since the bypass would not be affected and would operate as required.

3. A turbine trip could occur as a result of a high level signal from the moisture separator. This could occur either as a result of an actual high level or from a malfunctioning of the moisture separator high level switches. This would also result in a turbine trip with bypass situation.

4. A loss of feedwater flow could result when a gradual loss of condensate occurs. Any high energy steam or water line break which could result in a loss of condensate at a rate which would exceed the maximum available condensate makeup is assumed to result in a gradual reduction in condensate inventory. The low hotwell level could ultimately trip feedwater pumps on low suction pressure.

5. A complete loss of feedwater would result when one of the main condensate or feedwater lines is assumed to rupture. The feedwater pumps would no longer be able to feed the reactor vessel, which would quickly lead to a reactor scram on low water level. This loss of feedwater flow transient is bounded by Section 15.6.6 of the FSAR:

6. A loss of one reactor feedwater pump would result in a plant runback to no less than 68 percent of reactor rated load. The remaining pump will not be started automatically; however, it is expected that it will be started manually to allow the plant to resume full load.

7. A partial loss of feedwater heating could occur when:

   a. Steam extraction lines to heater are broken

   b. Drain lines are ruptured

   c. Heater controls are adversely affected

   d. Feedwater/condensate is bypassed around heater, or

   e. A heater string (train) is isolated.

   The largest postulated reduction in feedwater temperature assumes the loss of the third through sixth feedwater heaters of one train and the partial loss of fifth and sixth point heaters and second and third point drain coolers of the other trains. A decrease in feedwater temperature of less than 100°F results in no adverse effect on reactor parameters. This event is bounded by Section 15.1.1 of the FSAR.

8. Loss of reactor core isolation cooling pump can result from a break in the RCIC steam piping, but the break is automatically isolated by resultant high ambient temperature sensors, which are not postulated to fail (QA Category I).

9. Tripping a single reactor recirculation pump due to a failure of instrumentation requires no safeguard or protection system operation as analyzed in FSAR Section 15.3.

10. Failure of feedwater control system could occur as a result of either feedwater flow transmitter failing the controller in maximum demand or feedwater flow valves failing in full open position. This event will lead to a high reactor vessel level causing reactor scram, turbine trip, and main feedwater pump trip. Failure of feedwater controller in maximum demand event is bounded by Section 15.1.2 of the FSAR.

11. The worst hypothesized combination of the above conditions can occur from a pipe break within the turbine building, which may simultaneously cause a partial loss of feedwater heating (condition 7) and a turbine trip (condition 1 or 2) if the appropriate controls are disabled, leading to improper valve positioning.

The reduction in feedwater inlet temperature causes a gradual rise in reactor power and, depending upon the specific timing of the event, the turbine trip may occur at a reactor power elevated between the operating value and the trip level. It has been concluded that the occurrence of this event is highly unlikely. This conclusion is based in part on consideration of the probability that a combination of the following worst case conditions occurs concurrently:

a. The worst case pipe segment breaks on the most important line.

b. Pipe whip or jet impingement can strike all targets in an area and cause failures in worst case modes.

c. Breaks occur at worst case locations.

d. Both turbine trip and reactor high power-level trip occur at appropriate (i.e., worst case) times.

Should the unlikely worst case combined sequence occur, the reactor may experience for a short time a change in critical power ratio (CPR), which is not covered under existing FSAR Chapter 15 analyses for the Unacceptable Results for Incidents of Moderate Frequency - Anticipated Operational Transients. However, the effects of this accident event, even considering a single active component failure in a mitigating safety system, pose no threat to the unacceptable results for Limiting Faults - Design Basis (Postulated) Accidents presented in the FSAR Chapter 15.

All other combinations of the first ten conditions result in effects which are bounded by previously reported transient conditions as analyzed in FSAR Chapter 15 and noted in Appendix D. It is concluded that the hypothesized HELB, with resulting effects on control systems, poses no significant risk to the health and safety of the public. Therefore, no further accident analysis or any design modification is necessary.

4.0 CONCLUSIONS AND RECOMMENDATIONS

The detailed analysis of Appendix D presents a thorough discussion of the analysis performed for those zones of the Turbine Building, Reactor Building, and Auxiliary Bay which required evaluation under the criteria set forth in Section 2.0. The sacrificial approach, as outlined in Section 2.7, with the exception noted in Section 2.5.2, has been strictly applied, and conservative assumptions have been made to all analyses of system failure. No credit has been taken for operator action in any event beyond those already assumed in the existing FSAR Chapter 15 analyses.

The worst case combined effects of the postulated HELB and consequential control systems failures have been examined and detailed in the Combined Effects section of Appendix D for each zone or related zones. In many cases, the postulated HELB is not exacerbated by any combination of control systems failures in the zones. In some cases, control system component failures had insignificant effect on the controlled system and no further analysis was made. The applicable bounding FSAR Chapter 15 event has been referenced in the Combined Effects section of Appendix D for each zone where appropriate. These FSAR sections include the discussion of the effects of a single additional active component failure in a mitigating safety system and conclude that the combined consequence of failure is bounded by the existing analysis as described in Section 3.0 of this report entitled Discussion of Analysis.

5.0 REFERENCE DOCUMENTS

1. Equipment Qualification Environmental Design Criteria (EQEDC) for Nine Mile Point Station - Unit 2, Revision 2

2. U.S. Nuclear Regulatory Commission, IE Information Notice 79-22, Qualification of Control Systems

3. U.S. Nuclear Regulatory Commission Safety Evaluation Report for Nine Mile Point Station - Unit 2, Section 7.7.2.2

4. U.S. Nuclear Regulatory Commission, Standard Review Plan Determination of Break Locations and Dynamic Effects Associated With the Postulated Rupture of Piping, Section 3.6.2, Branch Technical Position MEB 3-1, 1981

5. Stone & Webster Engineering Corporation and GE documents

   a. Flow Diagram List (attached)

   b. Logic Diagram List (attached)

   c. Loop Diagram List (attached)

   d. Piping Drawing List (attached)

   e. Instrument Drawing List (attached)

APPENDIX A

SYSTEMS LIST

System Code	System Number	*Elimination Criteria	System Description
			BOP SYSTEMS
AAS	12-9	N4	Breathing Air
ABD	10-6	N5	Auxiliary Boiler Blowdown
ABF	10-2	N5	Auxiliary Boiler FDW and CNDS
ABH	13-11	N5	Auxiliary Boiler - Chemical Feed
ABM	10-1	N5	Auxiliary Boiler Steam
ANN	-	N2	ANN Input
ARC	5-1	-	Condenser Air Removal
ASR	3-10	N3	Auxiliary Steam - Radwaste
ASS	3-9	-	Auxiliary Steam (Nuclear)
BYS	24-13	-	Battery System
CCP	9-1	-	Reactor Plant Component Cooling Water
CCS	9-7	-	Turbine Plant Component Cooling Water
CEC	-	N6	Electrical Equipment - Control Room
CES	-	N6	Electrical Equipment - Local
CMS	33-2	N2	Containment Atmosphere Monitoring
CNA	4-4	N4	Auxiliary Condensate
CND	4-7	-	Condensate Demineralizer
CNM	4-1	-	Condensate
CNO	4-10	-	Condensate Booster Pump Lube Oil System

*More than one criteria may be applicable in some cases.

System Code	System Number	*Elimination Criteria	System Description
CNS	4-3	-	Condensate Makeup/Drawoff
CPS	22-23	N4	Primary Containment Purge
CRS	3-2	-	Cold Reheat
CWS	2-1	-	Circulating Water
DCS	28-1	N4	Decontamination System
DER	32-9	N4	Reactor Building Equipment Drains
DET	32-11	N4	Turbine Building Equipment Drains
DFD	23-11	N4	Standby Diesel Gen Building Floor Drains
DFE	23-8	N4	Service Building Equipment and Floor Drains
DFM	23-12	N4	Miscellaneous Building Floor Drains
DFR	23-6	N4	Reactor Building Floor Drains
DFT	23-7	N4	Turbine Building Floor Drains
DFW	23-10	N4	Radwaste Building Floor Drains
DRS	22-22	-	Drywell Cooling
DSM	32-7	-	Moisture Separator Vents and Drain
DSR	32-6	-	Moisture Separator RHTR Vents and Drains
DTM	32-5	-	Turbine Building Miscellaneous Drains
DWS	23-1	N4	Domestic Water
EGA	12-4	N7	Standby Diesel Generator Air Startup
EGF	8-9	N7	Standby Diesel Generator Fuel
EGP	24-9	N7	Standby Diesel Generator Protection
EGS	24-9	N7	Standby Diesel Generator Protection

System Code	System Number	*Elimination Criteria	System Description
EJS	24-11.2	N7	Standby Station Service Substation
ENS	24-9	N7	Standby Station Service Supply Breakers
ERS	-	N4	Earthquake Recording System
ESS	3-4	-	Extraction Steam
EXS	-	N6	Main Generator Excitation System
FOF	8-10	N4	Diesel Fire Pump Fuel Oil
FPF	15-4	N4	Fire Protection - Foam
FPG	15-5	N4	Fire Protection - Halon
FPL	15-3	N4	Fire Protection - Low-Pressure Carbon Dioxide
FPM	15-7	N4	Fire Detection
FPW	15-1	N4	Fire Protection - Water
FWL	7-3	-	FDW Pump 4 Drive Lube Oil
FWP	6-4	-	FDW Pump Seal and Leakoff
FWR	6-3	-	FDW Pump Recirculation
FWS	6-1	-	Feedwater System
GMC	16-8	-	Generator Stator Cooling Water
GMH	16-7	-	Generator Hydrogen and Carbon Dioxide
GML	16-10	-	Generator Leads Cooling
GMO	16-6	-	Generator Seal Oil
GSN	14-1	N4	Nitrogen
GTS	27-15	N7	Standby Gas Treatment
HCS	27-13	N7	DBA Hydrogen Recombiner

System Code	System Number	*Elimination Criteria	System Description
HDH	6-6	-	High-Pressure FDW Heater Drain
HDL	4-2	-	Low-Pressure FDW Heater Drain
HRS	3-3	-	Hot Reheat
HVC	22-9	N4,N7	Control Building Air-Conditioning
HVE	22-2	N4	Service Building Ventilation
HVG	22-17	N4	Glycol Heating
HVH	22-16	N4	Hot Water Heating
HVI	22-29	N4	Auxiliary Boiler Room Ventilation
HVK	22-12	N7	Control Building Chilled Water
HVL	22-11	N4	Auxiliary Service Building Ventilation
HVN	22-14	N3	Ventilation Chilled Water
HVO	22-10	N3	Office Building A/C
HVP	22-7	N4,N7	Standby Diesel Gen Building Ventilation
HVR	22-1	N3	Reactor Building Ventilation
HVT	22-3	N3	Turbine Building Ventilation
HVW	22-5	N4	Radwaste Building Ventilation
HVY	22-8	N4,N7	Yard Structure Ventilation
IAS	12-1	-	Instrument Air
IHA	-	N2	Annunciator System
IHC	-	N2	Information System-Computer
IHS	-	N2	TSC/CR/EOF-ERF
ISC	27-19	N7	Containment Isolation

System Code	System Number	*Elimination Criteria	System Description
JRB	-	N4	Personnel Air Locks
LMS	33-1	N4	Containment Leakage Monitoring
LOS	16-3	N4	Turb Gen Oil Conditioning and Storage
LPM	-	N4	Vibration and Loose Parts Monitoring
LWS	31-1	N4	Radioactive Liquid Waste
MHN	-	N4	Material Handling System
MMS	-	N4	Meteorological Monitoring System
MSS	3-1	-	Main Steam (B22)
MWS	9-15	N3	Makeup Water
NJS	24-10	N6	Normal Station Service - Substation
NNS	24-8.4, 8.6	N6	Normal Station Service - 4-kV Supply
NPS	24-8.2	N6	Normal Station Service - 15-kV Supply
OFG	31-4	-	Off-Gas (N64)
PBS	23-3	N4	Sanitary Drains
RRS	-	N7	Redundant Reactor Control System
SAS	12-2	N4	Service Air
SCC	-	N2	Bypass and Inoperative Status
SCI	-	N2	Off-Normal Status Indicator
SCM	-	N2	Post Accident Monitoring
SFC	34-2	N4	Fuel Pool Cooling and Purification
SPF	24-7.1	N6	Res Sta Serv XFMR Hi-Side Line Protection
SPG	1-5	N6	Generator Trips

System Code	System Number	*Elimination Criteria	System Description
SPG	24-2.1	-	Main Generator Protection
SPM	24-3	N6	Main XFMR Protection
SPR	24-5	N6	Reserve Station Service XFMR Protection
SPS	24-4	N6	Normal Station Service XFMR Protection
SPU	24-1	N6	Unit Protection
SPX	24-6.1	N6	Station Auxiliary Power XFMR Protection
SRR	23-2	N4	Roof Drainage
SRW	23-4	N4	Storm and Waste Water
SSP	21-8	N5	Post Accident Sampling System
SSR	21-2	N2	Reactor Plant Sampling System
SST	21-1	N2	Turbine Plant Sampling System
SSW	21-4	N2	Radwaste Building Sampling System
SVH	32-14	-	FDW Heater Relief Drains and Vents
SVV	32-8	N7	Mn Stm Safety Valves - Vents and Drains
SWP	9-10	-	Service Water
SWR	31-6	N4	Seal Water Radwaste
SWT	9-13	N4	Traveling Screen Wash and Disposal
SXS	-	N4	Transient Analysis
SYD	24-12.3	N6	Synchronizing - Standby Station Service
SYG	24-12.1	N6	Synchronizing - Main Generator
SYS	24-12.2	N6	Synchronizing - Normal Station Service
TMA	1-4	-	Turbine Trips

System Code	System Number	*Elimination Criteria	System Description
TMB	16-5.2	-	Turbine Generator EH Fluid System
TME	16-1	-	Turbine Generator Gland Seal and Exhaust
TMG	16-4	N5	Turbine Generator Turning Gear
TMI	-	N2	Turbine Generator Supervisory Instrument
TML	16-2	-	Turbine Generator Lube Oil
TMR	1-7	-	Unit Runback
TMS	16-9	-	Turbine Generator Exhaust Hood Spray
VTP	32-18	N4	Turbine Plant Equipment Vents
WOS	16-12	N4	Waste Oil Disposal
WSS	31-3	N4	Radioactive Solid Waste
WTA	13-20	N4	Chemical Feed - Acid
WTH	13-4	N4	Chemical Feed - Hypochlorite
WTS	13-1	N4	Water Treating - Raw Water
WTW	13-3	N4	Water Treating - Waste Water
YUC	24-7.2	N6	SWYD Supply to Reserve Station Service
YXC	24-7.3	N6	345-kV Motor-Operated Disc Switch
YXL	24-3.2	N6	345-kV Line Protection
YWC	24-7	N6	230-kV Switchyard Control
-	-	N4	Station Grounding - Instruments & Controls

System Code	System Number	*Elimination Criteria	System Description
			NSSS SYSTEMS
ADS -	B22	N7	Automatic Depressurization System (ADS)
CSH 27-4	E22	N7	High-Pressure Core Spray System
CSL 27-5	E21	N7	Low-Pressure Core Spray (LPCS)
FHS -	F15	N1	Fuel Handling System
FWC -	C33	-	Feedwater Control System
ICS 27-6	E51	N7	Reactor Core Isol and Cooling System (RCIC)
LDS -	E31	N7	Leak Detection System
NMS -	C51	-	Neutron Monitoring System
NSS -	B22	-	Nuclear Boiler System
RBM -	C12	-	Rod Block Monitoring
RCS 25-1	B35	-	Reactor Recirculation System
RDS 36-1	C11	-	Control Rod Drive (CRD)
RHS 27-7	E12	N7	Residual Heat Removal System (RHR)
RMC -	C12	-	Reactor Manual Control
RMS -	D13	-	Radiation Monitor
RPS 1-6	C72	-	Reactor Protection System
RSS -	C61	N7	Remote Shutdown System
RWM -	C12	-	Rod Worth Minimizer and Rod Sequence Control
SLS 27-16	C41	N7	Standby Liquid Control System
TIP -	C51	N4	Traversing In-Core Probe

System Code	System Number	*Elimination Criteria	System Description
WCS 26-3	G33/G36	N3,N7	Reactor Water Cleanup (RWCU)

APPENDIX B

CONTROL COMPONENT LIST AND FUNCTIONS

Notes: 1. Unless otherwise noted, all solenoid valves are mounted on the valve.

2. Zones AE, AF, J, E do not contain nonsafety related control components.

Zone No. PC240-604

System Code	Instrument/ Device ID No.	Instrument/Device Function Description
CCP	2CCP-TE32A (B35-N003A)	Reactor Building Closed Loop Cooling Water Temperature from 2RCS-E4A Seal Cooler

Zone No. PC240-606

System Code	Instrument/ Device ID No.	Instrument/Device Function Description
CCP	2CCP-FS10A (B35-N004A)	Reactor Building Closed Loop Cooling Water Flow Switch From 2RCS-E4A Seal Cooler

Zone No. PC250-618

System Code	Instrument/ Device ID No.	Instrument/Device Function Description
CCP	2CCP-FS10B (B35-N004B)	Reactor Building Closed Loop Cooling Water Flow Switch From 2RCS-E4B Seal Cooler
CCP	2CCP-TE32B (B35-N003B)	Reactor Building Closed Loop Cooling Water Temperature From 2RCS-E4B Seal Cooler
RCS	2RCS-SOV45B (B35-F079B)	Solenoid Operating Valve For 2RCS*AOV45B
RCS	2RCS-FS39B (B35-N002B)	2RCS-P1B Motor Seal Water Leak High Flow
RCS	2RCS-FS40B (B35-N007B)	2RCS-P1B Motor Seal Stage Flow
RCS	2RCS-TE12B (B35-N028B)	2RCS-P1B Recirculation Pump Suction Temperature
RCS	2RCS-TE13B (B35-N023B)	2RCS-P1B Recirculation Pump Suction Temperature
RCS	2RCS-TE28B (B35-C001B-H2)	2RCS-P1B No. 2 Seal Cavity Temperature
RCS	2RCS-TE29B (B35-C001B-J2)	2RCS-P1B No. 1 Seal Cavity Temperature

APPENDIX B
CONTROL COMPONENTS

Zone No. PC250-622

System Code	Instrument/ Device ID No.	Instrument/Device Function Description
RCS	2RCS-SOV45A (B35-F079A)	Solenoid Operating Valve For 2RCS*AOV45A
RCS	2RCS-FS39A (B35-N002A)	2RCS-P1A Motor Seal Water Leak High Flow
RCS	2RCS-FS40A (B35-N007A)	2RCS-P1A Motor Seal Stage Flow
RCS	2RCS-LS32A (B35-C001A-LSH)	2RCS-P1A Motor Low Bearing Oil Level High
RCS	2RCS-TE12A (B35-N028A)	2RCS-P1A Recirculation Pump Suction Temperature
RCS	2RCS-TE13A (B35-N023A)	2RCS-P1A Recirculation Pump Suction Temperature
RCS	2RCS-TE28A (B35-C001A-H1)	2RCS-P1A No. 2 Seal Cavity Temperature
RCS	2RCS-TE29A (B35-C001A-J1)	2RCS-P1A No. 1 Seal Cavity Temperature

Zone No. PC250-624

System Code	Instrument/ Device ID No.	Instrument/Device Function Description
CCP	2CCP-FS34A (B35-N008A)	Reactor Building Closed Loop Cooling Water Flow Switch From 2RCS-E5A/C Motor Cooler
CCP	2CCP-TE26A (B35-N009A)	Reactor Building Closed Loop Cooling Water Temperature From 2RCS-E5A/C Motor Cooler

APPENDIX B
CONTROL COMPONENTS

Zone No. PC261-637

System Code	Instrument/ Device ID No.	Instrument/Device Function Description
CCP	2CCP-FS34B (B35-N008B)	Reactor Building Closed Loop Cooling Water Flow Switch From 2RCS-E5B/D Motor Cooler
CCP	2CCP-TE26B (B35-N009B)	Reactor Building Closed Loop Cooling Water Temperature From 2RCS-E5B/D Motor Cooler
CCP	2CCP-TE95B (B35-N001B)	Reactor Building Closed Loop Cooling Water Temperature from 2RCS-E2B/B3B Motor Cooler

Zone No. PC261-643

System Code	Instrument/ Device ID No.	Instrument/Device Function Description
RCS	2RCS-LS32B (B35-C001B-LSH)	2RCS-P1B Motor Low Bearing Oil Level High
RCS	2RCS-LS34A (B35-C001A-LSL)	2RCS-P1A Motor Up Bearing Oil Low
RCS	2RCS-LS35A (B35-C001A-LSH)	2RCS-P1A Motor Up Bearing Oil High
RCS	2RCS-LS36A (B35-C001A-LSH)	2RCS-P1A Motor Cooler Water Level High
RCS	2RCS-LS36C (B35-C001A-LSH)	2RCS-P1A Motor Cooler Water Level High
RCS	2RCS-NBS20A (B35-C001A-VBSH)	2RCS-P1A Motor Vibration High
RCS	2RCS-TE21A (B35-C001A-A1)	2RCS-P1A Motor Up Thrust Bearing Temperature
RCS	2RCS-TE22A (B35-C001A-B1)	2RCS-P1A Motor Low Thrust Bearing Temperature
RCS	2RCS-TE23A (B35-C001A-C1)	2RCS-P1A Motor Low Guide Bearing Temperature
RCS	2RCS-TE24A (B35-C001A-D1)	2RCS-P1A Motor Winding A Temperature
RCS	2RCS-TE25A (B35-C001A-E1)	2RCS-P1A Motor Winding B Temperature

APPENDIX B
CONTROL COMPONENTS

Zone No. PC261-643

System Code	Instrument/ Device ID No.	Instrument/Device Function Description
RCS	2RCS-TE26A (B35-C001A-F1)	2RCS-P1A Motor Winding C Temperature
RCS	2RCS-TE27A (B35-C001A-G1)	2RCS-P1A Motor Low Guide Bearing Temperature

Zone No. PC261-646

System Code	Instrument/ Device ID No.	Instrument/Device Function Description
CCP	2CCP-TE95A (B35-N001A)	Reactor Building Closed Loop Cooling Water Temperature From 2RCS-E2A/B3A Motor Cooler

Zone No. PC261-651

System Code	Instrument/ Device ID No.	Instrument/Device Function Description
RCS	2RCS-LS33A (B35-C001A-LSL)	2RCS-P1A Motor Low Bearing Oil Low
RCS	2RCS-LS33B (B35-C001B-LSL)	2RCS-P1B Motor Low Bearing Oil Low
RCS	2RCS-LS34B (B35-C001B-LSL)	2RCS-P1B Motor Up Bearing Oil Low
RCS	2RCS-LS35B (B35-C001B-LSH)	2RCS-P1B Motor Up Bearing Oil High
RCS	2RCS-LS36B (B35-C001B-LSH)	2RCS-P1B Motor Cooler Water Level High
RCS	2RCS-LS36D (B35-C001B-LSH)	2RCS-P1B Motor Cooler Water Level High
RCS	2RCS-NBS20B (B35-C001B-VBSH)	2RCS-P1B Motor Vibration High
RCS	2RCS-TE21B (B35-C001B-A2)	2RCS-P1B Motor Up Thrust Bearing Temperature
RCS	2RCS-TE22B (B35-C001B-B2)	2RCS-P1B Motor Low Thrust Bearing Temperature
RCS	2RCS-TE23B (B35-C001B-C2)	2RCS-P1B Motor Low Guide Bearing Temperature
RCS	2RCS-TE24B (B35-C001B-D2)	2RCS-P1B Motor Winding A Temperature

Zone No. PC261-651

System Code	Instrument/ Device ID No.	Instrument/Device Function Description
RCS	2RCS-TE25B (B35-C001B-E2)	2RCS-P1B Motor Winding B Temperature
RCS	2RCS-TE26B (B35-C001B-F2)	2RCS-P1B Motor Winding C Temperature
RCS	2RCS-TE27B (B35-C001B-G2)	2RCS-P1B Motor Low Guide Bearing Temperature

APPENDIX B
CONTROL COMPONENTS

Zone No. ABN 17503

System Code	Instrument/ Device ID No.	Instrument/Device Function Description
CCP	2CCP-I/P108	Reactor Plant Component Cooling Water Temperature Control
CCP	2CCP-TV108	Reactor Plant Component Cooling Water Temperature Control Valve

Zone No. SC 175102

System Code	Instrument/ Device ID No.	Instrument/Device Function Description
CCP	2CCP-PS45A	Reactor Plant Component Cooling Water Booster Pump 2CCP-P3A Suction Pressure Low
CCP	2CCP-PS45B	Reactor Plant Component Cooling Water Booster Pump 2CCP-P3B Suction Pressure Low
CCP	2CCP-PS45C	Reactor Plant Component Cooling Water Booster Pump 2CCP-P3C Suction Pressure Low
CCP	2CCP-PS47A	Reactor Plant Component Cooling Water Booster Pump 2CCP-P3A Discharge Header Pressure Low
CCP	2CCP-PS47B	Reactor Plant Component Cooling Water Booster Pump 2CCP-P3B Discharge Header Pressure Low
CCP	2CCP-PS47C	Reactor Plant Component Cooling Water Booster Pump 2CCP-P3C Discharge Header Pressure Low

Zone No. SC 215122

System Code	Instrument/ Device ID No.	Instrument/Device Function Description
RDS	2RDS-PS14A (C12-N018A)	Control Rod Drive Water Pump 2RDS-P1A Discharge Pressure Low
RDS	2RDS-PS14B (C12-N018B)	Control Rod Drive Water Pump 2RDS-P1B Discharge Pressure Low
RDS	2RDS-PS2A (C12-N001A)	Control Rod Drive Water Pump 2RDS-P1A Suction Pressure Low
RDS	2RDS-PS2B (C12-N001B)	Control Rod Drive Water Pump 2RDS-P1B Suction Pressure Low

Zone No. SC 261145

System Code	Instrument/ Device ID No.	Instrument/Device Function Description
RDS	2RDS-PT108 (C12-N005)	Charging Water Header Pressure
RDS	2RDS-FT112 (C12-N007)	RDS Drive Water Flow
RDS	2RDS-FT115 (C12-N009)	RDS Cooling Water Flow
RDS	2RDS-FE107 (C12-N003)	RDS Cooling Water Flow
B35	2ISC*PT115 (B35-N040)	Recirc Pump Thermal Shock Interlock
B35	2RCS*PT84B (B35-N050B)	High Drywell Pressure
B35	2RCS*ACT2A (B35-D003)	Recirc Power Unit
C33	2ISC*PT108 (C33-N005)	Recirc Pump Thermal Shock Interlock
C33	2ISC*PDT14A (C33-N004A)	Reactor Vessel Level
C33	2ISC*PDT14B (C33-N004B)	Reactor Vessel Level

Zone No. SC 261145

System Code	Instrument/ Device ID No.	Instrument/Device Function Description
C33	2ISC*PT109 (C33-N008)	Reactor Pressure
RDS	Transponder Branch Junction Modules	Manual Rod Control

Zone No. SC 289155

System Code	Instrument/ Device ID No.	Instrument/Device Function Description
CCP	2CCP-PS96A	Reactor Plant Component Cooling Water Pump 2CCP-P1A Discharge Header Pressure Low
CCP	2CCP-PS96B	Reactor Plant Component Cooling Water Pump 2CCP-P1B Discharge Header Pressure Low
CCP	2CCP-PS96C	Reactor Plant Component Cooling Water Pump 2CCP-P1C Discharge Header Pressure Low
IAS	2IAS-PS178	ADS Compressor Receiver Tank 2IAS*TJ4 Pressure High
IAS	2IAS-PS180	ADS Compressor Receiver Tank 2IAS*TK4 Pressure High
IAS	2IAS-PS183	ADS Compressor Receiver Tank 2IAS*TK5 Pressure High
IAS	2IAS-PS185	ADS Compressor Receiver Tank 2IAS*TK5 Pressure High

APPENDIX B
CONTROL COMPONENTS

Zone No. SC 289182

System Code	Instrument/ Device ID No.	Instrument/Device Function Description
CNS	2CNS-PCV132	Condensate Makeup and Drawoff Water to Spent Fuel Pool Pressure Control Valve

APPENDIX B
CONTROL COMPONENTS

Zone No. SC 289359

System Code	Instrument/ Device ID No.	Instrument/Device Function Description
SWP	2SWP-AOV568 2SWP-SOV568	Reactor Building Ventilation Supply Cooler 2SWP-CLC2 Cooling Water Inlet Valve
SWP	2SWP-AOV569 2SWP-SOV569	Reactor Building Ventilation Supply Cooler 2SWP-CLC2 Cooling Water Inlet Valve

APPENDIX B
CONTROL COMPONENTS

Zone No. SC 328193

System Code	Instrument/ Device ID No.	Instrument/Device Function Description
CCP	2CCP-AOV120	Reactor Plant Component Cooling Water Expansion Tank 2CCP-TK1 Fill Valve
CCP	2CCP-LS120	Reactor Plant Component Cooling Water Expansion Tank 2CCP-TK1 Normal and Low Level
CCP	2CCP-PS67A	Reactor Plant Component Cooling Water Pump 2CCP-P1A Suction Pressure Low
CCP	2CCP-PS67B	Reactor Plant Component Cooling Water Pump 2CCP-P1B Suction Pressure Low
CCP	2CCP-PS67C	Reactor Plant Component Cooling Water Pump 2CCP-P1C Suction Pressure Low
CCP	2CCP-SOV120	Reactor Plant Component Cooling Water Expansion Tank 2CCP-TK1 Fill Valve Air Control Valve

Zone No. AA

System Code	Instrument/ Device ID No.	Instrument/Device Function Description
ASS	2ASS-PIC125	Off-gas steam pressure controller
ASS	2ASS-PIC140	Off-gas preheater steam pressure controller
OFG	20FG-AOV103 20FG-SOV103	Off-gas system discharge to stack isolation valve
OFG	20FG-AOV45A 20FG-SOV45A	Vacuum pump 20FG-P1A inlet valve
OFG	20FG-AOV45B 20FG-SOV45B	Vacuum pump 20FG-P1B inlet valve
OFG	20FG-AOV52A 20FG-SOV52A	Vacuum pump 20FG-P1A outlet valve
OFG	20FG-AOV52B 20FG-SOV52B	Vacuum pump 20FG-P1B outlet valve
OFG	20FG-AT16A	Condenser 20FG-CND1A hydrogen analyzer
OFG	20FG-AT16B	Condenser 20FG-CND1B hydrogen analyzer
OFG	20FG-ASHH16A	Offgas condenser 20FG-CND1A outlet hydrogen concentration extreme high
OFG	20FG-ASHH16B	Offgas condenser 20FG-CND1B hydrogen concentration extreme high
OFG	20FG-FT3A	Condenser 20FG-CND1A discharge flow
OFG	20FG-FT3B	Condenser 20FG-CND1B discharge flow
OFG	20FG-FSH3A	Offgas condenser 20FG-CND1A discharge flow high

Zone No. AA

System Code	Instrument/ Device ID No.	Instrument/Device Function Description
OFG	20FG-FSH3B	Offgas condenser 20FG-CND1B discharge flow high
OFG	20FG-FSL3A	Offgas condenser 20FG-CND1A discharge flow low
OFG	20FG-FSL3B	Offgas condenser 20FG-CND1B discharge flow low
OFG	20FG-PDIS117	Off-gas dryer differential pressure high
OFG	20FG-PT44A	Vacuum pump 20FG-P1A suction pressure control
OFG	20FG-PT44B	Vacuum pump 20FG-P1B suction pressure control
OFG	20FG-P1C44A	Offgas vacuum pump 20FGP1A suction pressure controller
OFG	20FG-P1C44B	Offgas vacuum pump 20FG-P1B suction pressure controller
OFG	20FG-I/P44A	Current to pneumatic transducer for vacuum pump pressure control
OFG	20FG-I/P44B	Current to pneumatic transducer for vacuum pump pressure control
OFG	20FG-PV44A 20FG-SOVX44A 20FG-SOVY44A	Vacuum pump 20FG-P1A suction pressure control valve
OFG	20FG-PV44B 20FG-SOVX44B 20FG-SOVY44B	Vacuum pump 20FG-P1B suction pressure control valve
OFG	20FG-PT71A	Preheater 20FG-E1A inlet pressure
OFG	20FG-PT71B	Preheater 20FG-E1B inlet pressure control

Zone No. AA

System Code	Instrument/ Device ID No.	Instrument/Device Function Description
OFG	20FG-I/P71A	Current to pneumatic converter for preheater inlet pressure control loop
OFG	20FG-I/P71B	Current to pneumatic converter for preheater inlet pressure control loop
OFG	20FG-P1C71A	Preheater 20FG-E1A inlet pressure controller
OFG	20FG-P1C71B	Preheater 20FG-E1B inlet pressure controller
OFG	20FG-AOV11A 20FG-SOV11A	Condenser 20FG-CND1A outlet valve (to off-gas)
OFG	20FG-AOV11B 20FG-SOV11B	Condenser 20FG-CND1B outlet valve (to off-gas)
OFG	20FG-AOV1A 20FG-SOV1A	Preheater 20FG-E1A inlet valve
OFG	20FG-AOV1B 20FG-SOV1B	Preheater 20FG-E1B inlet valve
OFG	20FG-AOV4A 20FG-SOV4A	Dryer 20FG-DRY1A inlet valve
OFG	20FG-AOV4B 20FG-SOV4B	Dryer 20FG-DRY1B inlet valve
OFG	20FG-AOV4C 20FG-SOV4C	Dryer 20FG-DRY1C inlet valve
OFG	20FG-AOV5A 20FG-SOV5A	Dryer 20FG-DRY1A outlet valve

Zone No. AA

System Code	Instrument/ Device ID No.	Instrument/Device Function Description
OFG	20FG-AOV5B 20FG-SOV5B	Dryer 20FG-DRY1B outlet valve
OFG	20FG-SOV5C 20FG-SOV5C	Dryer 20FG-DRY1C outlet valve
OFG	20FG-AOV9A 20FG-SOV9A	Preheater strainer 20FG-STR1A blowdown valve
OFG	20FG-AOV9B 20FG-SOV9B	Preheater strainer 20FG-STR1B blowdown valve
OFG	20FG-LIC20A	Condenser 20FG-CND1A level controller
OFG	20FG-LIC20B	Condenser 20FG-CND1B level controller
OFG	20FG-LT20A	Condenser 20FG-CND1A level transmitter
OFG	20FG-LT20B	Condenser 20FG-CND1B level transmitter
OFG	20FG-LV20A 20FG-SOVX20A 20FG-SOVY20A	Condenser 20FG-CND1A level control valve
OFG	20FG-LV20B 20FG-SOVX20B 20FG-SOVY20B	Condenser 20FG-CND1A level control valve
OFG	20FG-LV28A 20FG-SOV28A	Dryer 20FG-DRY1A drain control valve

Zone No. AA

System Code	Instrument/ Device ID No.	Instrument/Device Function Description
OFG	20FG-LV28B 20FG-SOV28B	Dryer 20FG-DRY1B drain control valve
OFG	20FG-LV28C 20FG-SOV28C	Dryer 20FG-DRY1C drain control valve
OFG	20FG-PV71A	Auxiliary steam supply to off-gas system pressure control valve (train A)
OFG	20FG-PV71B	Auxiliary steam supply to off-gas system pressure control valve (train B)
OFG	20FG-RE13A 20FG-FT13A	Off-gas pretreatment header radiation monitor (train A - isolates on high radiation)
OFG	20FG-RE13B 20FG-FT13B	Off-gas pretreatment header radiation monitor (train B - isolates on high radiation)
OFG	20FG-LIS20A	Condenser 20FG-CND1A level high/low (input to 20FG-LV20A control logic)
OFG	20FG-LIS20B	Condenser 20FG-CND1B level high/low (input to 20FG-LV20B control logic)
OFG	20FG-LIS28A	Freeze out dryer 200FG-DRY1A drain control level
OFG	20FG-LIS28B	Freeze out dryer 200FG-DRY1B drain control level
OFG	20FG-LIS28C	Freeze out dryer 200FG-DRY1C drain control level
OFG	20FG-PCV111	Offgas system makeup air pressure regulator
OFG	20FG-PCV63A	Offgas freeze out dryer 200FG-DRY1A evaporator pressure regulator
OFG	20FG-PCV63B	Offgas freeze out dryer 200FG-DRY1A evaporator pressure regulator

Zone No. AA

System Code	Instrument/ Device ID No.	Instrument/Device Function Description
OFG	20FG-PCV63C	Offgas freeze out dryer 20OFG-DRY1A evaporator pressure regulator
OFG	20FG-SOV112	Offgas system low air flow makeup valve
OFG	20FG-SOV14A	Offgas preheater 20FG-E1A auxiliary steam supply
OFG	20FG-SOV14B	Offgas preheater 20FG-E1B auxiliary steam supply
OFG	20FG-SOV62A	Offgas dryer 20FG-DRY1A refrigerator defrost solenoid
OFG	20FG-SOV62B	Offgas dryer 20FG-DRY1B refrigerator defrost solenoid
OFG	20FG-SOV62C	Offgas dryer 20FG-DRY1C refrigerator defrost solenoid
OFG	20FG-SOV70A	Offgas preheater 20FG-E1A steam inlet valve
OFG	20FG-SOV70B	Offgas preheater 20FG-E1B steam inlet valve
OFG	20FG-TCV6A	Freeze out dryer 20FG-DRY1A temperature control valve
OFG	20FG-TCV6B	Freeze out dryer 20FG-DRY1B temperature control valve
OFG	20FG-TCV6C	Freeze out dryer 20FG-DRY1C temperature control valve
OFG	20FG-TCV7A	Freeze out dryer 20FG-DRY1A temperature control valve
OFG	20FG-TCV7B	Freeze out dryer 20FG-DRY1B temperature control valve
OFG	20FG-TCV7C	Freeze out dryer 20FG-DRY1C temperature control valve
OFG	20FG-TCV8A	Freeze out dryer 20FG-DRY1A temperature control valve

Zone No. AA

System Code	Instrument/ Device ID No.	Instrument/Device Function Description
OFG	20FG-TCV8B	Freeze out dryer 20FG-DRY1B temperature control valve
OFG	20FG-TCV8C	Freeze out dryer 20FG-DRY1C temperature control valve

APPENDIX B
CONTROL COMPONENTS

Zone No. AB

System Code	Instrument/ Device ID No.	Instrument/Device Description/Function
TME	2TME-PT103	Clean steam reboiler discharge header pressure
TME	2TME-PT107	Turbine generator gland seal and exhaust steam seal reducer pressure
TME	2TME-PC111	Turbine generator gland seal and exhaust system main steam pressure reducing valve controller
TME	2TME-PV111	Turbine generator gland seal and exhaust system main steam pressure reducing valve
TME	2TME-PCV114	Clean steam reboilers common discharge to gland seal pressure control valve.

Zone No. AC

System Code	Instrument/ Device ID No.	Instrument/Device Function Description
TME	2TME-HV21A 2TME-SOV21A	Condensate feed to clean steam boiler 2TME-E1A isolation valve
TME	2TME-LS12A	Clean steam boiler 2TME-E1A shell level high
TME	2TME-LS13A	Clean steam boiler 2TME-E1A shell level high (closes 2TME-LV13A on high level)
TME	2TME-LT13A	Clean steam boiler 2TME-E1A shell level
TME	2TME-LV13A 2TME-SOV13A	Clean steam boiler 2TME-E1A shell level control valve

APPENDIX B
CONTROL COMPONENTS

Zone No. AD

System Code	Instrument/ Device ID No.	Instrument/Device Function Description
TME	2TME-HV21B 2TME-SOV21B	Condensate feed to clean steam boiler 2TME-E1B isolation valve
TME	2TME-LS12B	Clean steam boiler 2TME-E1B shell level high
TME	2TME-LS13B	Clean steam boiler 2TME-E1B shell level high (closes 2TME-LV13B on high level)
TME	2TME-LT13B	Clean steam boiler 2TME-E1B shell level
TME	2TME-LV13B 2TME-SOV13B	Clean steam boiler 2TME-E1B shell level control valve

Zone No. A

System Code	Instrument/ Device ID No.	Instrument/Device Function Description
CND	2CND-FV294	Condensate recycle outlet valve to main condenser
CNM	2CNM-TV121	Condensate to exhaust hood spray temperature control valve
CWS	2CWS-LS51A	Condenser discharge water box level low
CWS	2CWS-LS51B	Condenser discharge water box level low
CWS	2CWS-LS51C	Condenser discharge water box level low
CWS	2CWS-LS51D	Condenser discharge water box level low
CWS	2CWS-LS51E	Condenser discharge water box level low
CWS	2CWS-LS51F	Condenser discharge water boc level low
DTM	2DTM-AOV102 2DTM-SOV102	Turbine generator gland seal and exhaust system low point drain strainer 2DTM-STR43 blowdown valve
DTM	2DTM-AOV111 2DTM-SOV111	Auxiliary steam header low point drain valve
DTM	2DTM-AOV143 2DTM-SOV143	Steam seal header low point drain header strainer 2DTM-STR143 blowdown valve
DTM	2DTM-AOV166 2DTM-SOV166	Steam seal header low point drain header strainer 2DTM-STR155 blowdown valve
DTM	2DTM-AOV5A 2DTM-SOV5A	Extraction steam upstream drain valve

Zone No. A

System Code	Instrument/ Device ID No.	Instrument/Device Function Description
DTM	2DTM-AOV5B 2DTM-SOV5B	Extraction steam upstream drain valve
DTM	2DTM-AOV5C 2DTM-SOV5C	Extraction steam upstream drain valve
HRS	2HRS-PS107	Moisture separator reheater cross around pressure
HRS	2HRS-PS108	Moisture separator reheater cross around pressure
HRS	2HRS-CIV1 2HRS-CIV6	L.P. turbine 2TMS-T2A combined intermediate valve
HRS	2HRS-CIV2 2HRS-CIV5	L.P. turbine 2TMS-T2B combined intermediate valve
HRS	2HRS-CIV3 2HRS-CIV4	L.P. turbine 2TMS-T2C combined intermediate valve
MSS	2MSS-AOV191 2MSS-SOV191	Main steam combined header drain valve
MSS	2MSS-AOV194 2MSS-SOV194	Turbine steam bypass chest drain valve
MSS	2MSS-AOV203 2MSS-SOV203	Main steam combined header drain valve
MSS	2MSS-AOV205 2MSS-SOV205	Turbine steam bypass chest drain valve

Zone No. A

System Code	Instrument/ Device ID No.	Instrument/Device Function Description
MSS	2MSS-PSV89A	Turbine bypass chest valve
MSS	2MSS-PSV89B	Turbine bypass chest valve
MSS	2MSS-PSV89C	Turbine bypass chest valve
MSS	2MSS-PSV89D	Turbine bypass chest valve
MSS	2MSS-PSV89E	Turbine bypass chest valve
SVH	2SVH-HV14A 2SVH-SOV14A	First point heater 2CNM-E1A channel drain valve
SVH	2SVH-HV14B 2SVH-SOV14B	First point heater 2CNM-E1B channel drain valve
SVH	2SVH-HV14C 2SVH-SOV14C	First point heater 2CNM-E1C channel drain valve
SVH	2SVH-HV1A 2SVH-SOV1A	First point heater 2CNM-E1A channel drain valve
SVH	2SVH-HV1B 2SVH-SOV1B	First point heater 2CNM-E1B channel drain valve
SVH	2SVH-HV1C 2SVH-SOV1C	First point heater 2CNM-E1C channel drain valve
SVH	2SVH-HV24A 2SVH-SOV24A	Second point heater 2CNM-E2A channel drain valve

Zone No. A

System Code	Instrument/ Device ID No.	Instrument/Device Function Description
SVH	2SVH-HV24B 2SVH-SOV24B	Second point heater 2CNM-E2B channel drain valve
SVH	2SVH-HV24C 2SVH-SOV24C	Second point heater 2CNM-E2C channel drain valve
SVH	2SVH-HV2A 2SVH-SOV2A	Second point heater 2CNM-E2A shell vent valve
SVH	2SVH-HV2B 2SVH-SOV2B	Second point heater 2CNM-E2B shell vent valve
SVH	2SVH-HV2C 2SVH-SOV2C	Second point heater 2CNM-E2C shell vent valve
TMA	2TMA-PSX1A	Turbine condenser vacuum low trip
TMA	2TMA-PSX1B	Turbine condenser vacuum low trip
TMA	2TMA-PSX1C	Turbine condenser vacuum low trip
TMA	2TMA-PSY1A	Turbine condenser vacuum low trip
TMA	2TMA-PSY1B	Turbine condenser vacuum low trip
TMA	2TMA-PSY1C	Turbine condenser vacuum low trip
TMA	2TMA-TS3A	Turbine exhaust hood temperature high-high
TMA	2TMA-TS3B	Turbine exhaust hood temperature high-high

Zone No. A

System Code	Instrument/ Device ID No.	Instrument/Device Function Description
TMA	2TMA-TS3C	Turbine exhaust hood temperature high-high
TMB	2TMB-HVY130	Extraction air relay dump valve
TMB	2TMB-PS109	EHC hydraulic pressure low
TMB	2TMB-PS110	EHC fluid pump A auto start
TMB	2TMB-PS111	EHC fluid pump B auto start
TMB	2TMB-PS112	EHC hydraulic pressure low
TMB	2TMB-PS12A	EHC fluid pump A discharge pressure low
TMB	2TMB-PS12B	EHC fluid pump B discharge pressure low
TMB	2TMB-PS2A	Emergency trip oil pressure low
TMB	2TMB-PS2B	Emergency trip oil pressure low
TMB	2TMB-PSX13A	Thrust bearing wear detector
TMB	2TMB-PSX13B	Thrust bearing wear detector
TMB	2TMB-PSY13A	Thrust bearing wear detector
TMB	2TMB-PSY13B	Thrust bearing wear detector
TMB	2TMB-SE123	Bearing metal temperature
TMB	2TMB-SE124	Bearing metal temperature

Zone No. A

System Code	Instrument/ Device ID No.	Instrument/Device Function Description
TMB	2TMB-SE125	Bearing metal temperature
TML	2TML-PS14A	Turbine generator lube oil lift pump suction pressure low (P6A)
TML	2TML-PS14B	Turbine generator lube oil lift pump suction pressure low (P6B)
TML	2TML-PS14C	Turbine generator lube oil lift pump suction pressure low (P6C)
TML	2TML-PS14D	Turbine generator lube oil lift pump suction pressure low (P6D)
TML	2TML-PS14E	Turbine generator lube oil lift pump suction pressure low (P6E)
TML	2TML-PS14F	Turbine generator lube oil lift pump suction pressure low (P6F)
TML	2TML-PS14G	Turbine generator lube oil lift pump suction pressure low (P6G)
TML	2TML-PS14H	Turbine generator lube oil lift pump suction pressure low (P6H)
TML	2TML-PS15A	Turbine generator lube oil lift pump discharge pressure low
TML	2TML-PS15B	Turbine generator lube oil lift pump discharge pressure low
TML	2TML-PS15C	Turbine generator lube oil lift pump discharge pressure low
TML	2TML-PS15D	Turbine generator lube oil lift pump discharge pressure low
TML	2TML-PS15E	Turbine generator lube oil lift pump discharge pressure low
TML	2TML-PS15F	Turbine generator lube oil lift pump discharge pressure low
TML	2TML-PS15G	Turbine generator lube oil lift pump discharge pressure low

Zone No. A

System Code	Instrument/ Device ID No.	Instrument/Device Function Description
TML	2TML-PS15H	Turbine generator lube oil lift pump discharge pressure low
TMS	2TMS-TT101	Turbine generator exhaust hood spray hood A temperature
TMS	2TMS-TT102	Turbine generator exhaust hood spray hood B
TMS	2TMS-TY103	Turbine generator exhaust hood spray temperature select

APPENDIX B
CONTROL COMPONENTS

Zone No. B

System Code	Instrument/ Device ID No.	Instrument/Device Function Description
ARC	2ARC-HV25A 2ARC-SOV25A	Condenser 2CNM-CND1A air take-off valve
ARC	2ARC-HV25B 2ARC-SOV25B	Condenser 2CNM-CND1B air take-off valve
ARC	2ARC-HV25C 2ARC-SOV25C	Condenser 2CNM-CND1C air take-off valve
ARC	2ARC-HV26A 2ARC-SOV26A	Condenser 2CNM-CND1A air take-off valve
ARC	2ARC-HV26B 2ARC-SOV26B	Condenser 2CNM-CND1B air take-off valve
ARC	2ARC-HV26C 2ARC-SOV26C	Condenser 2CNM-CND1C air take-off valve
ASS	2ASS-PV106 2ASS-SOV106	Auxiliary steam to building heating intermediate heat exchangers pressure control valve
ASS	2ASS-PV113 2ASS-SOV113	Auxiliary steam to clean steam reboilers pressure control valve
ASS	2ASS-STV112 2ASS-SOV112	Clean steam reboiler trip valve
ASS	2ASS-STV143 2ASS-SOV143	Building heating steam trip valve
ASS	2ASS-AOV144 2ASS-SOV144	Auxiliary steam to off-gas system header drain valve

Zone No. B

System Code	Instrument/ Device ID No.	Instrument/Device Function Description
CNS	2CNS-AOV304 2CNS-SOV304	Condenser hotwell level emergency makeup valve
CNS	2CNS-LS104	Condenser hotwell level low (emergency makeup)
CNS	2CNS-LT103	Condenser hotwell normal makeup level control
CNS	2CNS-LT105	Condenser hotwell drawoff level control
CNS	2CNS-LV105	Condenser hotwell drawoff level control valve
DSM	2DSM-LS78A	Moisture separator drain receiver tank 2DSM-TK4 high level (control for 2DSM-LV78A)
DSM	2DSM-LV78A 2DSM-SOV78A	Moisture separator drain receiver tank 2DSM-TK4 high level drain valve
DSR	2DSR-LS67A	Moisture separator reheater drain receiver tank 2DSR-TK6A extreme high level
DSR	2DSR-AOV83A 2DSR-SOV83A	Moisture Separator Reheater Vents and Drains scavenging steam isolation valve
DSR	2DSR-AOV84A 2DSR-SOV84A	Moisture Separator Reheater Vents and Drains scavenging steam header warm-up valve
DSR	2DSR-LV68A 2DSR-SOV68A 2DSR-SOVX68A	Moisture separator reheater drain receiver tank 2DSR-TK6A high level drain valve
DSR	2DSR-LS68A	2DSR-TK6 drain receiver level
DTM	2DTM-AOV106 2DTM-SOV106	Nonreturn valve 2ESS-NRV109 after seat drain valve

Zone No. B

System Code	Instrument/ Device ID No.	Instrument/Device Function Description
DTM	2DTM-AOV107 2DTM-SOV107	Auxiliary steam low point drain valve (2ASS-V31 after seat drain)
DTM	2DTM-AOV108 2DTM-SOV108	Auxiliary steam to off-gas system header low point drain valve
DTM	2DTM-AOV104 2DTM-SOV104	Sixth point heater extraction header drain valve
DTM	2DTM-AOV105 2DTM-SOV105	Fifth point heater extraction header drain valve
DTM	2DTM-AOV119 2DTM-SOV119	Nonreturn valve 2ESS-NRV114 after seat drain valve
DTM	2DTM-AOV144 2DTM-SOV144	Auxiliary steam to clean steam reboiler low point drain valve
DTM	2DTM-AOV157 2DTM-SOV157	Extraction header drain valve
DTM	2DTM-AOV2A 2DTM-SOV2A	Fifth point heater extraction drain line valve
DTM	2DTM-AOV2B 2DTM-SOV2B	Fifth point heater extraction drain line valve
DTM	2DTM-AOV2C 2DTM-SOV2C	Fifth point heater extraction drain line valve
DTM	2DTM-AOV3A 2DTM-SOV3A	Fourth point heater extraction drain line valve

Zone No. B

System Code	Instrument/ Device ID No.	Instrument/Device Function Description
DTM	2DTM-AOV3B 2DTM-SOV3B	Fourth point heater extraction drain line valve
DTM	2DTM-AOV3C 2DTM-SOV3C	Fourth point heater extraction drain line valve
DTM	2DTM-AOV126 2DTM-SOV126	Auxiliary steam low point drain valve (after 2ASS-TV5A)
DTM	2DTM-AOV127 2DTM-SOV127	Auxiliary steam low point drain valve (after 2ASS-TV5B)
DTM	2DTM-AOV128 2DTM-SOV128	Auxiliary steam to building heating heat exchanger low point drain strainer 2DTM-STR33 blowdown valve
DTM	2DTM-AOV142 2DTM-SOV142	Auxiliary steam low point drain valve (2ASS-V31 after seat drain valve)
DTM	2DTM-AOV30A 2DTM-SOV30A	Air ejector motive steam line drain strainer 2DTM-STR34A blowdown valve
DTM	2DTM-AOV30B 2DTM-SOV30B	Air ejector motive steam line drain strainer 2DTM-STR34B blowdown valve
DTM	2DTM-AOV31A 2DTM-SOV31A	Air ejector motive steam line drain strainer 2DTM-STR37A blowdown valve
DTM	2DTM-AOV31B 2DTM-SOV31B	Air ejector motive steam line drain strainer 2DTM-STR37B blowdown valve
DTM	2DTM-AOV4A 2DTM-SOV4A	Extraction steam nonreturn valve 2ESS-NRV114 after seat drain line valve

Zone No. B

System Code	Instrument/ Device ID No.	Instrument/Device Function Description
DTM	2DTM-AOV8A 2DTM-SOV8A	Extraction steam nonreturn valve 2ESS-NRV34A downstream drain line valve
DTM	2DTM-AOV8B 2DTM-SOV8B	Extraction steam nonreturn valve 2ESS-NRV34B downstream drain line valve
DTM	2DTM-AOV8C 2DTM-SOV8C	Extraction steam nonreturn valve 2ESS-NRV34C downstream drain line valve
DTM	2DTM-AOV6A 2DTM-SOV6A	Auxiliary steam to off-gas system header low point drain valve
DTM	2DTM-AOV6B 2DTM-SOV6B	Auxiliary steam to off-gas system header low point drain valve
DTM	2DTM-AOV7A 2DTM-SOV7A	Auxiliary steam to building heating heat exchanger low point drain strainer 2DTM-STR56A blowdown valve
DTM	2DTM-AOV7B 2DTM-SOV7B	Auxiliary steam to building heating heat exchanger low point drain strainer 2DTM-STR56B blowdown valve
DTM	2DTM-AOV4B 2DTM-SOV4B	Auxiliary steam system drain valve
DTM	2DTM-AOV144 2DTM-SOV144	Auxiliary steam to clean steam reboiler valve
FWS	2FWS-LV55B (C33-F002B)	Condensate hotwell level control bypass valve
HDH	2HDH-LV26B 2HDH-SOV26B	Sixth point heater 2FWS-E6B emergency drain valve

Zone No. B

System Code	Instrument/ Device ID No.	Instrument/Device Function Description
HDL	2HDL-LV24B 2HDL-SOV24B	Fourth point heater 2CNM-E4B emergency drain valve
HDL	2HDL-LV2B	Second point heater drain receiver tank 2HDL-TK2B level control valve
HDL	2HDL-LV2C	Second point heater drain receiver tank 2HDL-TK2C level control valve
HDL	2HDL-LV3C	Third point heater 2CNM-E3C level control valve
HDL	2HDL-LV22A 2HDL-SOV22A	Second point heater drain receiver tank 2HDL-TK2A emergency drain valve
HDL	2HDL-LV22B 2HDL-SOV22B	Second point heater drain receiver tank 2HDL-TK2B emergency drain valve
HDL	2HDL-LV22C 2HDL-SOV22C	Second point heater drain receiver tank 2HDL-TK2C emergency drain valve
HDL	2HDL-LV23A 2HDL-SOV23A	Third point heater 2CNM-E3A emergency drain valve
HDL	2HDL-LV24A 2HDL-SOV24A	Fourth point heater 2CNM-E4A emergency drain valve
HDL	2HDL-LV25A 2HDL-SOV25A	Fifth point heater 2CNM-E5A emergency drain valve
HDL	2HDL-LV25B 2HDL-SOV25B	Fifth point heater 2CNM-E5B emergency drain valve
HDL	2HDL-LV25C 2HDL-SOV25C	Fifth point heater 2CNM-E5C emergency drain valve

Zone No. B

System Code	Instrument/ Device ID No.	Instrument/Device Function Description
HDL	2HDL-LV2A	Second point heater drain receiver tank 2HDL-TK2A level control valve
HDL	2HDL-LV3A	Third point heater 2CNM-E3A level control valve
HDL	2HDL-LV3B	Third point heater 2CNM-E3B level control valve
HDL	2HDL-LV24C 2HDL-SOV24C	Fourth point heater 2CNM-E4C emergency drain valve
HDL	2HDL-LV23B 2HDL-SOV23B	Third point heater 2CNM-E3B emergency drain valve
HDL	2HDL-LV23C 2HDL-SOV23C	Third point heater 2CNM-E3C emergency drain valve
HDH	2HDH-LV26A 2HDH-SOV26A	Sixth point heater 2FWS-E6A emergency drain valve
HDH	2HDH-LV26C 2HDH-SOV26C	Sixth point heater 2FWS-E6C emergency drain valve
MSS	2MSS-I/P22A	Current to pneumatic transducer for control of 2MSS-PV28A and 2MSS-PV29A
MSS	2MSS-PV28A	Moisture separator reheater 2MSS-E1A high pressure steam control valve
MSS	2MSS-PV29A	Moisture separator reheater 2MSS-E1A low pressure steam control valve
MSS	2MSS-AOV180 2MSS-SOV180	RSSV before seat drain valve
MSS	2MSS-AOV92A 2MSS-SOV92A	Main steam to reheater 2MSS-E1A valve

Zone No. B

System Code	Instrument/ Device ID No.	Instrument/Device Function Description
MSS	2MSS-AOV10B 2MSS-SOV10B	High pressure turbine steam lead drain valve
MSS	2MSS-AOV10D 2MSS-SOV10D	High pressure turbine steam lead drain valve
TME	2TME-AOV130 2TME-SOV130	Gland exhaust cooler drain receiver tank 2TME-TK1 level control valve

APPENDIX B
CONTROL COMPONENTS

Zone No. C

System Code	Instrument/ Device ID No.	Instrument/Device Function Description
ARC	2ARC-AOV104 2ARC-SOV104	Air ejector isolation valve
ASS	2ASS-AOV145 2ASS-SOV145	Auxiliary steam to clean steam boilers inlet valve
ASS	2ASS-PV146 2ASS-SOV146	Auxiliary steam to clean steam boilers steam pressure control valve
CNM	2CNM-FV114 2CNM-SOV114	Condensate recirculation flow control valve
CNM	2CNM-FV38A 2CNM-SOV38A	Condenste recirculation flow control valve (Train A)
CNM	2CNM-FV38B 2CNM-SOV38B	Condensate recirculation flow control valve (Train B)
CNM	2CNM-FV38C 2CNM-SOV38C	Condensate recirculation flow control valve
CNM	2CNM-HV55A 2CNM-SOV55A	Condensate system high point vent valve (Train A)
CNM	2CNM-HV55B 2CNM-SOV55B	Condensate system high point vent valve (Train B)
CNM	2CNM-HV55C 2CNM-SOV55C	Condensate system high point vent valve (Train C)
DSM	2DSM-LV78B 2DSM-SOV78B	Moisture separator drain receiver tank 2DSM-TK4B emergency drain to main condenser level control valve

Zone No. C

System Code	Instrument/ Device ID No.	Instrument/Device Function Description
DSR	2DSR-LS67B	Moisture separator drain receiver tank 2DSR-TK6B extreme high level
DSR	2DSR-LS68B	Moisture separator drain receiver tank 2DSR-TK6B high level shutoff
DSR	2DSR-LT68B	Moisture separator drain receiver tank 2DSR-TK6B high level control
DSR	2DSR-LV68B 2DSR-SOV68B 2DSR-SOVX68B	Moisture separator drain receiver tank 2DSR-TK6B high level drain valve
DSR	2DSR-AOV82B 2DSR-SOV82B	Scavenging steam to main condenser isolation valve
DSR	2DSR-AOV83B 2DSR-SOV83B	Scavenging steam to sixth point heater 2FWS-E6B isolation valve
DSR	2DSR-AOV84B 2DSR-SOV84B	Scavenging steam to sixth point heater 2FWS-E6B isolation valve
DSR	2DSR-AOV82A 2DSR-SOV82A	Moisture separator drain receiver tank 2DSR-TK6B steam supply line drain valve
ESS	2ESS-HV46A 2ESS-SOV46A	Sixth point heater warmup valve (Train A)
ESS	2ESS-HV46B 2ESS-SOV46B	Sixth point heater warmup valve (Train B)
ESS	2ESS-HV46C 2ESS-SOV46C	Sixth point heater warmup valve (Train C)

Zone No. C

System Code	Instrument/ Device ID No.	Instrument/Device Function Description
ESS	2ESS-HV47A 2ESS-SOV47A	Fifth point heater warmup valve (Train A)
ESS	2ESS-HV47B 2ESS-SOV47B	Fifth point heater warmup valve (Train B)
ESS	2ESS-HV47C 2ESS-SOV47C	Fifth point heater warmup valve (Train C)
ESS	2ESS-HV48A 2ESS-SOV48A	Fourth point heater warmup valve (Train A)
ESS	2ESS-HV48B 2ESS-SOV48B	Fourth point heater warmup valve (Train B)
ESS	2ESS-HV48C 2ESS-SOV48C	Fourth point heater warmup valve (Train C)
ESS	2ESS-HV49A 2ESS-SOV49A	Third point heater warmup valve (Train A)
ESS	2ESS-HV49B 2ESS-SOV49B	Third point heater warmup valve (Train B)
ESS	2ESS-HV49C 2ESS-SOV49C	Third point heater warmup valve (Train C)
ESS	2ESS-NRV103 2ESS-SOVX103 2ESS-SOVY103	Hot water heating heat exchanger extraction steam nonreturn valve

Zone No. C

System Code	Instrument/ Device ID No.	Instrument/Device Function Description
ESS	2ESS-NRV109 2ESS-SOVX109 2ESS-SOVY109	Hot water heating heat exchanger extraction steam nonreturn valve
ESS	2ESS-NRV113 2ESS-SOVX113 2ESS-SOVY113	Turbine generator gland seal and exhaust heat exchanger extraction steam nonreturn valve
ESS	2ESS-NRV114 2ESS-SOVX114 2ESS-SOVY114	Turbine generator for gland seal and exhaust heat exchanger extraction steam nonreturn valve
ESS	2ESS-NRV16A 2ESS-SOVX16A 2ESS-SOVY16A	Third point feedwater heater extraction steam nonreturn valve (Train A)
ESS	2ESS-NRV16B 2ESS-SOVX16B 2ESS-SOVY16B	Third point feedwater heater extraction steam nonreturn valve (Train B)
ESS	2ESS-NRV16C 2ESS-SOVX16C 2ESS-SOVY16C	Third point feedwater heater extraction steam nonreturn valve (Train C)
ESS	2ESS-NRV23A 2ESS-SOVX23A 2ESS-SOVY23A	Fourth point feedwater heater extraction steam nonreturn valve (Train A)
ESS	2ESS-NRV23B 2ESS-SOVX23B 2ESS-SOVY23B	Fourth point feedwater heater extraction steam nonreturn valve (Train B)

Zone No. C

System Code	Instrument/ Device ID No.	Instrument/Device Function Description
ESS	2ESS-NRV23C 2ESS-SOVX23C 2ESS-SOVY23C	Fourth point feedwater heater extraction steam nonreturn valve (Train C)
ESS	2ESS-NRV34A 2ESS-SOVX34A 2ESS-SOVY34A	Sixth point feedwater heater extraction steam nonreturn valve (Train A)
ESS	2ESS-NRV34B 2ESS-SOVX34B 2ESS-SOVY34B	Sixth point feedwater heater extraction steam nonreturn valve (Train B)
ESS	2ESS-NRV34C 2ESS-SOVX34C 2ESS-SOVY34C	Sixth point feedwater heater extraction steam nonreturn valve (Train C)
ESS	2ESS-STV104 2ESS-SOV104	Clean steam reboiler extraction steam isolation valve
ESS	2ESS-STV105 2ESS-SOV105	Building heating intermediate heat exchanger extraction steam isolation valve
FWR	2FWR-FV2A 2FWR-SOVX2A 2FWR-SOVY2A	Reactor feed pump 2FWS-P1A recirculation valve
FWR	2FWR-FV2B 2FWR-SOVX2B 2FWR-SOVY2B	Reactor feed pump 2FWS-P1B recirculation valve

Zone No. C

System Code	Instrument/ Device ID No.	Instrument/Device Function Description
FWR	2FWR-FV2C 2FWR-SOVX2C 2FWR-SOVY2C	Reactor feed pump 2FWS-P1C recirculation valve
FWS	2FWS-HVX111	High energy feedwater cycle cleanup control valve
FWS	2FWS-HVY111	High energy feedwater cycle cleanup control valve
FWS	2FWS-HVZ111	High energy feedwater cycle cleanup control valve
FWS	2FWS-HVX113 2FWS-SOVX113	Low energy feedwater cycle cleanup control valve
FWS	2FWS-HVY113 2FWS-SOVY113	Low energy feedwater cycle cleanup control valve
HDL	2HDL-LS22A	Drain receiver tank 2HDL-TK2A emergency drain control
HDL	2HDL-LS22B	Drain receiver tank 2HDL-TK2B emergency drain control
HDL	2HDL-LS22C	Drain receiver tank 2HDL-TK2C emergency drain control
HDL	2HDL-LT22A	Drain receiver tank 2HDL-TK2B emergency drain control
HDL	2HDL-LT22B	Drain receiver tank 2HDL-TK2B emergency drain control
HDL	2HDL-LT22C	Drain receiver tank 2HDL-TK2C emergency drain control
HDL	2HDL-LT2A	Drain receiver tank 2HDL-TK2A normal level control
HDL	2HDL-LT2B	Drain receiver tank 2HDL-TK2B normal level control

Zone No. C

System Code	Instrument/ Device ID No.	Instrument/Device Function Description
HDL	2HDL-LT2C	Drain receiver tank 2HDL-TK2C normal level control
HDL	2HDL-LS7A	First point heater 2CNM-E1A level high-high
	2HDL-LS7B	First point heater 2CNM-E1B level high-high
	2HDL-LS7C	First point heater 2CNM-E1C level high-high
HDL	2HDL-LS8A	Second point heater 2CNM-E2A level high-high
	2HDL-LS8B	Second point heater 2CNM-E2B level high-high
	2HDL-LS8C	Second point heater 2CNM-E2C level high-high
MSS	2MSS-I/P 22B	Current to pneumatic transducer for moisture separator reheater 2MSS-E1B steam pressure control
MSS	2MSS-PV28B	Moisture separator reheater 2MSS-E1B high load steam inlet valve
MSS	2MSS-PV29B	Moisture separator reheater 2MSS-E1B low load steam inlet valve
MSS	2MSS-AOV209	Main steam header drain valve
	2MSS-SOV209	
MSS	2MSS-AOV92B	Steam supply valve to moisture separator reheater 2MSS-E1B
	2MSS-SOV92B	
MSS	2MSS-AOV201	RHR steam Line A header drain valve
	2MSS-SOV201	
TME	2TME-AOV121	Auxiliary steam supply valve
	2TME-SOV121	
TME	2TME-PV122	Gland seal emergency supply pressure control valve

APPENDIX B

CONTROL COMPONENTS

ZONE D

System Code	Instrument/ Device ID No.	Instrument/Device Function Description
ARC	2ARC-FS8A	Condenser air removal pump 2ARC-P1A seal water flow low
ARC	2ARC-FS8B	Condenser air removal pump 2ARC-P1B seal water flow low
ARC	2ARC-SOV18A	Separator/silencer tank 2ARC-SP1A inlet valve
ARC	2ARC-SOV18B	Separator/silencer tank 2ARC-SP1A inlet valve
ARC	2ARC-AOV105 2ARC-SOV105	Air removal pump suction isolation valve
ASS	2ASS-AOV147 2ASS-SOV147	Auxiliary boiler steam inlet valve to steam jet air ejector
ASS	2ASS-PC107	Air ejector main steam supply primary pressure controller
ASS	2ASS-PC139	Air ejector main steam supply backup pressure controller
ASS	2ASS-PV140	Auxiliary boiler steam supply to off-gas system pressure control valve
ASS	2ASS-SOV138	Auxiliary boiler steam block valve
CCS	2CCS-I/P104	Turbine building closed loop cooling water heat exchanger temperature control current to pneumatic control
CCS	2CCS-TV104	Turbine building closed loop cooling water heat exchanger temperature control valve
CCS	2CCS-AOV105 2CCS-SOV105	Surge and makeup tank 2CCS-TK1 level control valve

CONTROL COMPONENTS

ZONE D

System Code	Instrument/ Device ID No.	Instrument/Device Function Description
CCS	2CCS-PS102	CCS pump discharge header pressure (control for 2CCS-P1A, B, C)
CCS	2CCS-PS17A	2CCS-P1A suction pressure
CCS	2CCS-PS17B	2CCS-P1B suction pressure
CCS	2CCS-PS17C	2CCS-P1C suction pressure
CCS	2CCS-TV15A	2TMB-E1A cooler temperature control valve
CCS	2CCS-TV15B	2TMB-E1B cooler temperature control valve
CCS	2CCS-I/P109	Generator H_2 cold gas outlet temperature control loop current to pneumatic converter
CCS	2CCS-TV109	Generator H_2 cold gas temperature control valve
CCS	2CCS-I/P32A	Generator Exciter Alternator Cooler 2EXC-E1A temperature control current to pneumatic transducer
CCS	2CCS-TV32A	Generator Exciter Alternator Cooler 2EXC-E1A temperature control valve
CCS	2CCS-I/P32B	Generator Exciter Alternator Cooler 2EXC-E1B temperature control current to pneumatic transducer
CCS	2CCS-TV32B	Generator Exciter Alternator Cooler 2EXC-E1B temperature control valve
CCS	2CCS-LS105	Surge and makeup tank level

CONTROL COMPONENTS

ZONE D

System Code	Instrument/ Device ID No.	Instrument/Device Function Description
CND	2CND-AOV133	Resin addition water supply valve
CNM	2CNM-AOV109 2CNM-SOV109A 2CNM-SOV109B	Condensate demineralizer bypass valve
CNM	2CNM-I/P114	Condensate recirculation flow control loop current to pneumatic transducer
CNM	2CNM-FT114	Condensate recirculation flow control loop flow transmitter
CNM	2CNM-FT38A	Condensate booster pump 2CNM-P2A recirculation flow control transmitter
CNM	2CNM-I/P38A	Condensate booster pump 2CNM-P2A recirculation flow control current to pneumatic transmitter
CNM	2CNM-FT38B	Condensate booster pump 2CNM-P2B recirculation flow control transmitter
CNM	2CNM-I/P137	Feedwater startup bypass valve control current to pneumatic transducer
CNM	2CNM-I/P38B	Condensate booster pump 2CNM-P2B recirculation flow control transmitter
CNM	2CNM-FT38C	Condensate booster pump 2CNM-P2C recirculation flow control transmitter
CNM	2CNM-I/P38C	Condensate booster pump 2CNM-P2C recirculation flow control current to pneumatic transducer
CNM	2CNM-FT68A	Feedwater pump 2FWS-P1A suction flow control transmitter
CNM	2CNM-FT68B	Feedwater pump 2FWS-P1B suction flow control transmitter

CONTROL COMPONENTS

ZONE D

System Code	Instrument/ Device ID No.	Instrument/Device Function Description
CNM	2CNM-FT68C	Feedwater pump 2FWS-P1C suction flow control transmitter
CNM	2CNM-PS39A	Condensate booster pump 2CNM-P2A suction pressure extreme low
CNM	2CNM-PS39B	Condensate booster pump 2CNM-P2B suction pressure extreme low
CNM	2CNM-PS39C	Condensate booster pump 2CNM-P2C suction pressure extreme low
CNM	2CNM-PS42A	Condensate booster pump 2CNM-P2A suction pressure low
CNM	2CNM-PS42B	Condensate booster pump 2CNM-P2B suction pressure low
CNM	2CNM-PS42C	Condensate booster pump 2CNM-P2C suction pressure low
CNM	2CNM-PS73A	Feedwater pump 2FWS-P1A suction pressure extreme low
CNM	2CNM-PS73B	Feedwater pump 2FWS-P1B suction pressure extreme low
CNM	2CNM-PS73C	Feedwater pump 2FWS-P1C suction pressure extreme low
CNM	2CNM-PS74A	Feedwater pump 2FWS-P1A suction pressure low
CNM	2CNM-PS74B	Feedwater pump 2FWS-P1B suction pressure low
CNM	2CNM-PS74C	Feedwater pump 2FWS-P1C suction pressure low
CNO	2CNO-PS1A	Condensate booster pump 2CNM-P2A lube oil discharge pressure low (pump interlock)
CNO	2CNO-PS1B	Condensate booster pump 2CNM-P2B lube oil discharge pressure low (pump interlock)

CONTROL COMPONENTS

ZONE D

System Code	Instrument/ Device ID No.	Instrument/Device Function Description
CNO	2CNO-PS1C	Condensate booster pump 2CNM-P2C lube oil discharge pressure low (pump interlock)
CNO	2CNO-PS2A	Condensate booster pump 2CNM-P2A lube oil discharge pressure low (pump interlock)
CNO	2CNO-PS2B	Condensate booster pump 2CNM-P2B lube oil discharge pressure low (pump interlock)
CNO	2CNO-PS2C	Condensate booster pump 2CNM-P2C lube oil discharge pressure low (pump interlock)
CNO	2CNO-PS9A	Condensate booster pump 2CNM-P2A lube oil discharge pressure low (pump interlock)
CNO	2CNO-PS9B	Condensate booster pump 2CNM-P2B lube oil discharge pressure low (pump interlock)
CNO	2CNO-PS9C	Condensate booster pump 2CNM-P2C lube oil discharge pressure low (pump interlock)
CNS	2CNS-LIC103	Condenser hotwell normal level makeup control
CNS	2CNS-LSL103	Condenser hotwell normal level low
CNS	2CNS-LV103	Condenser hotwell normal makeup
CNS	2CNS-LIC105	Condenser hotwell normal level drawoff control
DSM	2DSM-LS70A	Moisture separator reheater level high (turbine trip)
DSM	2DSM-LS70B	Moisture separator reheater level high (turbine trip)
DSM	2DSM-LT75A	Moisture separator drain receiver tank 2DSM-TK4A normal level transmitter
DSM	2DSM-LT75B	Moisture separator drain receiver tank 2DSM-TK4B normal level transmitter

CONTROL COMPONENTS

ZONE D

System Code	Instrument/ Device ID No.	Instrument/Device Function Description
DSM	2DSM-I/P78A	Moisture separator drain receiver tank 2DSM-TK4A high level control current to pneumatic transducer
DSM	2DSM-LT78A	Moisture separator drain receiver tank 2DSM-TK4B high level control transmitter
DSM	2DSM-I/P78B	Moisture separator drain receiver tank 2DSM-TK4B high level control current to pneumatic transducer
DSM	2DSM-LT78B	Moisture separator drain receiver tank 2DSM-TK4B high level control current to pneumatic transducer
DSM	2DSM-I/PX75A 2DSM-I/PY75A 2DSM-I/PZ75A 2DSM-I/PX75B 2DSM-I/PY75B 2DSM-I/PZ75B	Moisture separator drain receiver level normal
DSR	2DSR-LT65A	Moisture separator reheater drain receiver tank 2DSR-TK6A normal level control transmitter
DSR	2DSR-LT65B	Moisture separator reheater drain receiver tank 2DSR-TK6B normal level control transmitter
DSR	2DSR-I/PX65A 2DSR-I/PY65A 2DSR-I/PZ65A	Moisture separator reheater drain receiver tank 2DSR-TK6A normal level control loop current to pneumatic transducer

CONTROL COMPONENTS

ZONE D

System Code	Instrument/ Device ID No.	Instrument/Device Function Description
DSR	2DSR-I/PX65B 2DSR-I/PY65B 2DSR-I/PZ65B	Moisture separator reheater drain receiver tank 2DSR-TK6B normal level control loop current to pneumatic transducer
DSR	2DSR-I/P68A	Moisture separator reheater drain receiver tank 2DSR-TK6A high level control current to pneumatic transducer
DSR	2DSR-LT68A	Moisture separator reheater drain receiver tank 2DSR-TK6A high level control transmitter
DSR	2DSR-I/P68B	Moisture separator reheater drain receiver tank 2DSR-TK6B high level control current to pneumatic transducer
DSR	2DSR-LT68B	Moisture separator reheater drain receiver tank 2DSR-TK6B high level control transmitter
DSR	2DSR-PT78A	Moisture separator scavenging steam line header pressure control
DSR	2DSR-PT78B	Scavenging steam line pressure (control of 2DSR-MOV86B)
ESS	2ESS-PS110	Fifth point heater extraction steam pressure low
ESS	2ESS-PS112	Fourth point heater extraction steam pressure low
ESS	2ESS-PS115	Fifth point heater extraction steam pressure high
ESS	2ESS-PS116	Fourth point heater extraction steam pressure high

CONTROL COMPONENTS

ZONE D

System Code	Instrument/ Device ID No.	Instrument/Device Function Description
FWL	2FWL-PS1A	Feedwater pump 2FWS-P1A bearing oil pressure low
FWL	2FWL-PS1B	Feedwater pump 2FWS-P1B bearing oil pressure low
FWL	2FWL-PS1C	Feedwater pump 2FWS-P1C bearing oil pressure low
FWL	2FWL-PS2A	2FWS-P1A lube oil pump discharge pressure
FWL	2FWL-PS2B	2FWS-P1B lube oil pump discharge pressure
FWL	2FWL-PS2C	2FWS-P1C lube oil pump discharge pressure
FWP	2FWP-PCV5B	2FWS-P1B bearing seal water inlet pressure control valve
FWP	2FWP-PDIC5B	2FWS-P1B bearing seal water inlet pressure controller
FWP	2FWP-PDK5B	2FWS-P1B bearing seal water inlet pressure scaler
FWP	2FWP-PDT5B	2FWS-P1B bearing seal water inlet pressure transmitter
FWP	2FWP-PCV5A 2FWP-PDIC5A 2FWP-PDK5A 2FWP-PDT5A 2FWP-PS5A	Feedwater pump 2FWS-P1A bearing seal water inlet pressure control

CONTROL COMPONENTS

ZONE D

System Code	Instrument/ Device ID No.	Instrument/Device Function Description
FWP	2FWP-PCV5C 2FWP-PDIC5C 2FWP-PDK5C 2FWP-PDT5C 2FWP-PS5C	Feedwater pump 2FWS-P1C bearing seal water inlet pressure control
FWR	2FWR-I/P2A	Feedwater pump 2FWS-P1A recirculation flow control current to pneumatic transducer
FWR	2FWR-I/P2B	Feedwater pump 2FWS-P1B recirculation flow control current to pneumatic transducer
FWR	2FWR-I/P2C	Feedwater pump 2FWS-P1C recirculation flow control current to pneumatic transducer
FWS	2FWS-FT1A	Feedwater flow to reactor - Line A - transmitter
FWS	2FWS-FT1B	Feedwater flow to reactor - Line B - transmitter
FWS	2FWS-HV105 2FWS-SOV105	Reactor inlet header high point vent valve
FWS	2FWS-I/PX111 2FWS-I/PY111 2FWS-I/PZ111	High energy feedwater cycle cleanup control loop current to pneumatic transducers
FWS	2FWS-LV55A (C33-F002A)	High pressure low flow control valve
FWS	2FWS-I/PX113 2FWS-I/PY113	Low energy feedwater cycle cleanup control current to pneumatic transducers

CONTROL COMPONENTS

ZONE D

System Code	Instrument/ Device ID No.	Instrument/Device Function Description
FWS	2FWS-PS113	Low energy feedwater cycle cleanup control
FWS	2FWS-PS112	Low energy feedwater cycle cleanup shutoff
FWS	2FWS-LV10A	2FWS-P1A discharge flow valve
	2FWS-LV10B	2FWS-P1B discharge flow valve
	2FWS-LV10C	2FWS-P1C discharge flow valve
GMC	2GMC-PDC102	Generator stator cooling water differential pressure controller
GMC	2GMC-TV101	Generator stator cooling water temperature control valve
GMC	2GMC-FS140	Rectifier cooling water flow low
GMC	2GMC-FV127	Rectifier cooling water constant flow valve
GMC	2GMC-FV128	Bushing cooling water flow valve
GMC	2GMC-PDV102	Stator cooling water differential pressure control valve
GMC	2GMC-PNL141	Generator temperature monitoring input/output cabinet
GMC	2GMC-PS103	Stator cooling water pressure low
GMC	2GMC-PS105	Stator cooling water inlet pressure low
GMC	2GMC-PS139	Stator cooling water inlet pressure low
GMC	2GMC-PS6A	Stator cooling water pump 2GMC-P1A discharge pressure low

CONTROL COMPONENTS

ZONE D

System Code	Instrument/ Device ID No.	Instrument/Device Function Description
GMC	2GMC-PS6B	Stator cooling water pump 2GMC-P1B discharge pressure low
GMC	2GMC-SOV130	Stator cooling water pump 2GMC-P1B discharge pressure low
GMC	2GMC-TIC101	Stator cooling water temperature controller
GMC	2GMC-TS109	Stator cooling water outlet temperature high
GMH	2GMH-AOV119 2GMH-SOV119	Generator hydrogen supply isolation valve
GMH	2GMH-AOV162 2GMH-SOV162	Generator hydrogen emergency dump valve
GMH	2GMH-PS174	Generator hydrogen machine gas pressure control for emergency dump valve 2GMH-AOV162
GMH	2GMH-PCV111	Generator hydrogen manifold gas pressure regulator
GMH	2GMH-PT117	Generator hydrogen machine gas pressure transmitter
GMH	2GMH-PV117	Generator hydrogen machine gas pressure control valve
GMH	2GMH-SOV173	Gas analyzer bypass to vent valve
GML	2GML-FS1A	Generator leads coolers air flow low
GML	2GML-FS1B	Generator leads coolers air flow low
GMO	2GMO-LV115	Generator seal oil tank 2GMO-TK1 inlet oil spray valve

CONTROL COMPONENTS

ZONE D

System Code	Instrument/ Device ID No.	Instrument/Device Function Description
GMO	2GMO-PCV116	Generator seal oil pressure regulating valve
GMO	2GMO-PS102	Generator seal oil pump 2GMO-P1 discharge pressure low
GMO	2GMO-SOV117	Generator seal oil pump 2GMO-P3 lube oil feed valve
HDH	2HDH-LIC6A	Sixth point heater 2FWS-E6A normal drain controller
HDH	2HDH-LIC6B	Sixth point heater 2FWS-E6B normal drain controller
HDH	2HDH-LIC6C	Sixth point heater 2FWS-E6C normal drain controller
HDH	2HDH-LIC26A	Sixth point heater 2FWS-E6A emergency drain controller
HDH	2HDH-LIC26B	Sixth point heater 2FWS-E6B emergency drain controller
HDH	2HDH-LIC26C	Sixth point heater 2FWS-E6C emergency drain controller
HDH	2HDH-LSH26A	Sixth point heater 2FWS-E6A high level switch
	2HDH-LSH26B	Sixth point heater 2FWS-E6B high level switch
	2HDH-LSH26C	Sixth point heater 2FWS-E6C high level switch
HDL	2HDL-FT35A	Heater drain pump 2DET-P1A recirculation flow control transmitter
HDL	2HDL-FT35B	Heater drain pump 2DET-P1B recirculation flow control transmitter
HDL	2HDL-FT35C	Heater drain pump 2DET-P1C recirculation flow control transmitter

CONTROL COMPONENTS

ZONE D

System Code	Instrument/ Device ID No.	Instrument/Device Function Description
HDL	2HDL-I/P35A	Fourth point heater drain pump 2HDL-P1A recirculation loop current to pneumatic transducer
HDL	2HDL-I/P35B	Fourth point heater drain pump 2HDL-P1B recirculation loop current to pneumatic transducer
HDL	2HDL-I/P35C	Fourth point heater drain pump 2HDL-P1C recriculation loop current to pneumatic transducer
HDL	2HDL-I/P4A	Fourth point heater 2CNM-E4A level control current to pneumatic transducer
HDL	2HDL-I/P4B	Fourth point heater 2CNM-E4B level control current to pneumatic transducer
HDL	2HDL-I/P4C	Fourth point heater 2CNM-E4C level control current to pneumatic transducer
HDL	2HDL-PS50A	Fourth point heater drain pump 2HDL-P1A suction pressure low
HDL	2HDL-PS50B	Fourth point heater drain pump 2HDL-P1B suction pressure low
HDL	2HDL-PS50C	Fourth point heater drain pump 2HDL-P1C suction pressure low
HDL	2HDL-LT4A	Fourth point heater 2CNM-E4A water level control transmitter
HDL	2HDL-LT4B	Fourth point heater 2CNM-E4B water level control transmitter
HDL	2HDL-LT4C	Fourth point heater 2CNM-E4C water level control transmitter
HDL	2HDL-LIC22A	Second point heater drain tank 2HDL-TK2A emergency drain controller
HDL	2HDL-LIC22B	Second point heater drain tank 2HDL-TK2B emergency drain controller
HDL	2HDL-LIC22C	Second point heater drain tank 2HDL-TK2C emergency drain controller

CONTROL COMPONENTS

ZONE D

System Code	Instrument/ Device ID No.	Instrument/Device Function Description
HDL	2HDL-LIC23A	Third point heater 2CNM-E3A emergency drain controller
HDL	2HDL-LIC23B	Third point heater 2CNM-E3B emergency drain controller
HDL	2HDL-LIC23C	Third point heater 2CNM-E3C emergency drain controller
HDL	2HDL-LIC24A	Fourth point heater 2CNM-E4A emergency drain controller
HDL	2HDL-LIC24B	Fourth point heater 2CNM-E4B emergency drain controller
HDL	2HDL-LIC24C	Fourth point heater 2CNM-E4C emergency drain controller
HDL	2HDL-LIC25A	Fifth point heater 2CNM-E5A emergency drain controller
HDL	2HDL-LIC25B	Fifth point heater 2CNM-E5B emergency drain controller
HDL	2HDL-LIC25C	Fifth point heater 2CNM-E5C emergency drain controller
HDL	2HDL-LIC2A	Second point heater drain receiver tank 2HDL-TK2A level controller
HDL	2HDL-LIC2B	Second point heater drain receiver tank 2HDL-TK2B level controller
HDL	2HDL-LIC2C	Second point heater drain receiver tank 2HDL-TK2C level controller
HDL	2HDL-LIC3A	Third point heater 2CNM-E3A normal drain controller
HDL	2HDL-LIC3B	Third point heater 2CNM-E3B normal drain controller
HDL	2HDL-LIC3C	Third point heater 2CNM-E3C normal drain controller

CONTROL COMPONENTS

ZONE D

System Code	Instrument/ Device ID No.	Instrument/Device Function Description
HDL	2HDL-LIC5A	Fifth point heater 2CNM-E5A normal drain controller
HDL	2HDL-LIC5B	Fifth point heater 2CNM-E5B normal drain controller
HDL	2HDL-LIC5C	Fifth point heater 2CNM-E5C normal drain controller
HDL	2HDL-LV3A	Third point heater 2CNM-E3A normal drain valve
HDL	2HDL-LV3B	Third point heater 2CNM-E3B normal drain valve
HDL	2HDL-LV3C	Third point heater 2CNM-E3C normal drain valve
HDL	2HDL-LSH22A	Second point heaters drain receiver tank level-high
	2HDL-LSH22B	Second point heaters drain receiver tank level-high
	2HDL-LSH22C	Second point heaters drain receiver tank level-high
HDL	2HDL-LSH23A	Third point heaters emergency drain high level switch
	2HDL-LSH23B	Third point heaters emergency drain high level switch
	2HDL-LSH23C	Third point heaters emergency drain high level switch
HDL	2HDL-LSH24A	Fourth point heater emergency drain high level switch
	2HDL-LSH24B	Fourth point heater emergency drain high level switch
	2HDL-LSH24C	Fourth point heater emergency drain high level switch
HDL	2HDL-LSH25A	Fifth point heater emergency drain high level switch
	2HDL-LSH25B	Fifth point heater emergency drain high level switch
	2HDL-LSH25C	Fifth point heater emergency drain high level switch

CONTROL COMPONENTS

ZONE D

System Code	Instrument/ Device ID No.	Instrument/Device Function Description
MSS	2MSS-PT103	First stage pressure-high pressure turbine
	2MSS-PT104	First stage pressure-high pressure turbine
SWP	2SWP-HV98A 2SWP-SOV98A	Vacuum pump seal water cooler 2ARC-E1A service water outlet valve
SWP	2SWP-HV98B 2SWP-SOV98B	Vacuum pump seal water cooler 2ARC-E1B service water outlet valve
TMB	2TMB-PS130	Extraction air relay pressure for valve controls
TMB	2TMB-TIC1A	EHC fluid cooler 2TMB-E1A temperature controller
TMB	2TMB-TIC1B	EHC fluid cooler 2TMB-E1B temperature controller
TMB	2TMB-SOV121	Turbine generator EH fluid pump B test valve
TMB	2TMB-TS101	Turbine generator EH fluid temperature high/low
TMB	2TMB-TS116	Turbine generator EH fluid heater unit temperature control
TME	2TME-LS130	Seal drain tank 2TME-TK1 level switch
TML	2TML-SS1A	Turbine generator lube oil turbine speed low
TML	2TML-SS1B	Turbine generator lube oil turbine speed low

APPENDIX B

CONTROL COMPONENTS

ZONE F

System Code	Instrument/ Device ID No.	Instrument/Device Function Description
CNM	2CNM-HV51A 2CNM-SOV51A	Condensate system high point vent valve
CNM	2CNM-HV52A 2CNM-SOV52A	Condensate system high point vent valve
CNM	2CNM-HV56A 2CNM-SOV56A	Condensate system high point vent valve
CNM	2CNM-HV57A 2CNM-SOV57A	Condensate system high point vent valve
CNM	2CNM-HV58A 2CNM-SOV58A	Condensate system high point vent valve
CNM	2CNM-HV59A 2CNM-SOV59A	Condensate system high point vent valve
CNM	2CNM-HV60A 2CNM-SOV60A	Condensate system high point vent valve
DSM	2DSM-LVX75A 2DSM-SOVX75A	Moisture separator drain receiver tank 2DSM-TK4A normal level control valve
DSM	2DSM-LVX75B 2DSM-SOVX75B	Moisture separator drain receiver tank 2DSM-TK4B normal level control valve
DSR	2DSR-AOV81A 2DSR-SOV81A	Sixth point feedwater heater 2FWS-E6A scavenging steam inlet valve

APPENDIX B

CONTROL COMPONENTS

ZONE F

System Code	Instrument/ Device ID No.	Instrument/Device Function Description
DSR	2DSR-LVX65A 2DSR-SOVX65A	Heater drain receiver tank 2DSR-TK6A normal level control valve
DSR	2DSR-LVX65B 2DSR-SOVX65B	Heater drain receiver tank 2DSR-TK6B normal level control valve
FWS	2FWS-HV42A 2FWS-SOV42A	Feedwater pump 2FWS-P1A discharge high point vent valve
FWS	2FWS-HV43A 2FWS-SOV43A	Sixth point heater outlet high point vent
HDH	2HDH-LS26A	Sixth point heater 2FWS-E6A emergency drain level switch
HDH	2HDH-LS7A	Sixth point heater 2FWS-E6A extreme high level
HDH	2HDH-LT26A	Sixth point heater 2FWS-E6A emergency drain control level transmitter
HDH	2HDH-LT6A	Sixth point heater 2FWS-E6A normal drain control level transmitter
HDH	2HDH-LV6A 2HDH-SOV6A	Sixth point heater 2FWS-E6A normal drain valve
HDL	2HDH-SOV29A	Sixth point heater 2FWS-E6A normal to emergency drain line valve
HDL	2HDL-LS11A	Fifth point heater 2CNM-E5A extreme high level
HDL	2HDL-LS25A	Fifth point heater 2CNM-E5A emergency drain level

APPENDIX B

CONTROL COMPONENTS

ZONE F

System Code	Instrument/ Device ID No.	Instrument/Device Function Description
HDL	2HDL-LT25A	Fifth point heater 2CNM-E5A emergency drain level transmitter
HDL	2HDL-LT5A	Fifth point heater 2CNM-E5A normal drain level transmitter
HDL	HDL-LV4A	Fourth point heater 2CNM-E4A water level control valve
HDL	2HDL-FV35A 2HDL-SOVX35A 2HDL-SOVY35A	Heater drain pump 2HDL-P1A recirculation flow control valve
HDL	2HDL-LS9A	Third point heater 2CNM-E3A level extreme high
HDL	2HDL-LS10A	Fourth point heater 2CNM-E4A level extreme high
HDL	2HDL-LS14A	Fourth point heater 2CNM-E4A level low
HDL	2HDL-LS23A	Third point heater 2CNM-E3A emergency drain level
HDL	2HDL-LT23A	Third point heater 2CNM-E3A emergency drain level control
HDL	2HDL-LS24A	Fourth point heater 2CNM-E4A emergency drain level
HDL	2HDL-LT24A	Fourth point heater 2CNM-E4A emergency drain level control
HDL	2HDL-LT3A	Third point heater 2CNM-E3A normal drain control
HDL	2HDL-LT4A	Fourth point heater 2CNM-E4A normal drain control

APPENDIX B

CONTROL COMPONENTS

ZONE F

System Code	Instrument/ Device ID No.	Instrument/Device Function Description
HDL	2HDL-LV5A 2HDL-SOV5A	Fifth point heater 2CNM-35A normal drain control valve
SVH	2SVH-HV26A 2SVH-SOV26A	Sixth point heater 2FWS-E6A channel drain valve
SVH	2SVH-HV27A 2SVH-SOV27A	Sixth point heater 2FWS-E6A shell vent valve
SVH	2SVH-HV36A 2SVH-SOV36A	Fifth point heater 2CNM-E5A shell vent valve
SVH	2SVH-HV37A 2SVH-SOV37A	Fifth point heater 2CNM-E5A channel drain valve
SVH	2SVH-HV52A 2SVH-SOV52A	Third point heater drain cooler 2CNM-DCL3A shell vent valve
SVH	2SVH-HV58A 2SVH-SOV58A	Second point heater drain cooler 2CNM-DCL2A shell vent valve
SVH	2SVH-HV31A 2SVH-SOV31A	Fourth point heater 2CNM-E4A shell vent valve
SVH	2SVH-HV32A 2SVH-SOV32A	Fourth point heater 2CNM-E4A channel drain valve

ZONE F

System Code	Instrument/ Device ID No.	Instrument/Device Function Description
SVH	2SVH-HV44A 2SVH-SOV44A	Third point heater 2CNM-E3A shell vent valve
SVH	2SVH-HV45A 2SVH-SOV45A	Third point heater 2CNM-E3A channel drain valve

APPENDIX B

CONTROL COMPONENTS

ZONE G

System Code	Instrument/ Device ID No.	Instrument/Device Function Description
CNM	2CNM-HV51B 2CNM-SOV51B	Condensate system high point vent
CNM	2CNM-HV52B 2CNM-SOV52B	Condensate system high point vent
CNM	2CNM-AOV101 2CNM-SOV101A 2CNM-SOV101B 2CNM-SOV101C 2CNM-SOV101D	Low pressure heater string bypass valve
CNM	2CNM-HV56B 2CNM-SOV56B	Condensate system high point vent valve
CNM	2CNM-HV57B 2CNM-SOV57B	Condensate system high point vent valve
CNM	2CNM-HV58B 2CNM-SOV58B	Condensate system high point vent valve
CNM	2CNM-HV59B 2CNM-SOV59B	Condensate system high point vent valve
CNM	2CNM-HV60B 2CNM-SOV60B	Condensate system high point vent valve
CNM	2CNM-LV137	Feedwater pumps startup bypass valve

CONTROL COMPONENTS

ZONE G

System Code	Instrument/ Device ID No.	Instrument/Device Function Description
DSM	2DSM-LVY75A 2DSM-SOVY75A	Moisture separator drain receiver tank 2DSM-TK4A normal level control valve
DSM	2DSM-LVY75B 2DSM-SOVY75B	Moisture separator drain receiver tank 2DSM-TK4B normal level control valve
DSR	2DSR-LVY65A 2DSR-SOVY65A	Moisture separator drain receiver tank 2DSR-TK6A normal level control valve
DSR	2DSR-LVY65B 2DSR-SOVY65B	Moisture separator drain receiver tank 2DSR-TK6B normal level control valve
DSR	2DSR-AOV81B 2DSR-SOV81B	Sixth point heater 2FWS-E6A scavenging steam inlet valve
FWS	2FWS-HV42B 2FWS-SOV42B	Feedwater pump discharge high point vent valve
FWS	2FWS-HV43B 2FWS-SOV43B	Sixth point heater outlet piping high point vent valve
HDH	2HDH-LS26B	Sixth point heater 2FWS-E6B emergency drain level
HDH	2HDH-LT26B	Sixth point heater 2FWS-E6B emergency drain level transmitter
HDH	2HDH-LS7B	Sixth point heater 2FWS-E6B extreme high level
HDH	2HDH-LT6B	Sixth point heater 2FWS-E6B normal drain level transmitter

APPENDIX B

CONTROL COMPONENTS

ZONE G

System Code	Instrument/ Device ID No.	Instrument/Device Function Description
HDH	2HDH-LV6B 2HDH-SOV6B	Sixth point heater 2FWS-E6B normal drain level control valve
HDH	2HDH-SOV29B	Sixth point heater 2FWS-E6B normal to emergency drain line valve
HDL	2HDL-LS11B	Fifth point heater 2CNM-E5B extreme high level
HDL	2HDL-LS25B	Fifth point heater 2CNM-E5B emergency drain level
HDL	2HDL-LT25B	Fifth point heater 2CNM-E5B emergency drain level transmitter
HDL	2HDL-LT5B	Fifth point heater 2CNM-E5B normal drain level transmitter
HDL	2HDL-LV4B	Fourth point heater 2CNM-E4B normal level control valve
HDL	2HDL-FV35B 2HDL-SOVX35B 2HDL-SOVY35B	Heater drain pump 2HDL-P1A recirculation flow control valve
HDL	2HDL-LS10B	Fourth point heater 2CNM-E4B extreme high level
HDL	2HDL-LS14B	Fourth point heater 2CNM-E4B level low
HDL	2HDL-LS23B	Third point heater 2CNM-E3B emergency drain level
HDL	2HDL-LT23B	Third point heater 2CNM-E3B emergency drain control level transmitter
HDL	2HDL-LS24B	Fourth point heater 2CNM-E4B emergency drain level

ZONE G

System Code	Instrument/ Device ID No.	Instrument/Device Function Description
HDL	2HDL-LT24B	Fourth point heater 2CNM-E4B emergency drain control level transmitter
HDL	2HDL-LT4B	Fourth point heater 2CNM-E4B water level
HDL	2HDL-LS9B	Third point heater 2CNM-E3B water level extreme high
HDL	2HDL-LT3B	Third point heater 2CNM-E3B normal drain level transmitter
HDL	2HDL-LV5B 2HDL-SOV5B	Fifth point heater 2CNM-E5B normal drain level transmitter
SVH	2SVH-HV31B 2SVH-SOV31B	Fourth point heater 2CNM-E4B shell vent valve
SVH	2SVH-HV32B 2SVH-SOV32B	Fourth point heater 2CNM-E1B channel drain valve
SVH	2SVH-HV44B 2SVH-SOV44B	Third point heater 2CNM-E3B shell vent valve
SVH	2SVH-HV45B 2SVH-SOV45B	Third point heater 2CNM-E3B channel drain valve
SVH	2SVH-HV26B 2SVH-SOV26B	Sixth point heater 2FWS-E6B channel drain valve
SVH	2SVH-HV27B 2SVH-SOV27B	Sixth point heater 2FWS-E6B shell vent valve

ZONE G

System Code	Instrument/ Device ID No.	Instrument/Device Function Description
SVH	2SVH-HV36B 2SVH-SOV36B	Fifth point heater 2CNM-E5B shell vent valve
SVH	2SVH-HV37B 2SVH-SOV37B	Fifth point heater 2CNM-E5B channel drain valve
SVH	2SVH-HV52B 2SVH-SOV52B	Third point drain cooler 2CNM-DCL3B shell vent valve
SVH	2SVH-HV58B 2SVH-SOV58B	Second point drain cooler 2CNM-DCL2B shell vent valve

APPENDIX B

CONTROL COMPONENTS

ZONE H

System Code	Instrument/ Device ID No.	Instrument/Device Function Description
CNM	2CNM-HV119 2CNM-SOV119	Feedwater pump suction header high point vent valve
CNM	2CNM-HV51C 2CNM-SOV51C	Condensate system high point vent valve
CNM	2CNM-HV52C 2CNM-SOV52C	Condensate system high point vent valve
CNM	2CNM-HV56C 2CNM-SOV56C	Condensate system high point vent valve
CNM	2CNM-HV57C 2CNM-SOV57C	Condensate system high point vent valve
CNM	2CNM-HV58C 2CNM-SOV58C	Condensate system high point vent valve
CNM	2CNM-HV59C 2CNM-SOV59C	Feedwater suction valve 2CNM-MOV84C bypass valve
CNM	2CNM-HV60C 2CNM-SOV60C	Feedwater suction valve 2CNM-MOV84C maintenance vent valve
DSM	2DSM-LVZ75A 2DSM-SOVZ75A	Moisture separator drain receiver tank 2DSM-TK4A normal level control valve
DSM	2DSM-LVZ75B 2DSM-SOVZ75B	Moisture separator drain receiver tank 2DSM-TK4B normal level control valve

CONTROL COMPONENTS

ZONE H

System Code	Instrument/ Device ID No.	Instrument/Device Function Description
DSR	2DSR-LVZ65A 2DSR-SOVZ65A	Moisture separator reheater drain receiver tank 2DSR-TK6A normal level control valve
DSR	2DSR-LVZ65B 2DSR-FOVZ65B	Moisture separator reheater drain receiver tank 2DSR-TK6B normal level control valve
DSR	2DSR-AOV81C 2DSR-SOV81C	Sixth point feedwater heater 2FWS-E6C scavenging steam isolation valve
FWS	2FWS-HV42C 2FWS-SOV42C	FSW pump discharge high point vent valve
FWS	2FWS-HV43C 2FWS-SOV43C	Sixth point heater outlet high point vent valve
HDH	2HDH-LS26C	Sixth point heater 2FWS-E6C emergency drain level
HDH	2HDH-LT26C	Sixth point heater 2FWS-E6C emergency drain level transmitter
HDH	2HDH-SOV29C	Sixth point heater 2FWS-E6C normal to emergency drain line valve
HDH	2HDH-LS7C	Sixth point heater 2FWS-E6C extreme high level
HDH	2HDH-LT6C	Sixth point heater 2FWS-E6C normal drain level control transmitter
HDH	2HDH-LV6C 2HDH-SOV6C	Sixth point heater 2FWS-E6C normal drain level control valve
HDL	2HDL-LS11C	Fifth point heater 2CNM-E5C extreme high level

ZONE H

System Code	Instrument/ Device ID No.	Instrument/Device Function Description
HDL	2HDL-LS25C	Fifth point heater 2CNM-E5C emergency drain level
HDL	2HDL-LT25C	Fifth point heater 2CNM-E5C emergency drain level control transmitter
HDL	2HDL-LT5C	Fifth point heater 2CNM-E5C normal drain level transmitter
HDL	2HDL-LV4C	Fourth point heater 2CNM-E4C normal level control valve
HDL	2HDL-FV35C 2HDL-SOVX35C 2HDL-SOVY35C	Fourth point heater drain pump 2HDL-P1C recirculation flow control valve
HDL	2HDL-LS10C	Fourth point heater 2CNM-E4C extreme high level
HDL	2HDL-LS14C	Fourth point heater 2CNM-E4C level low
HDL	2HDL-LS23C	Third point heater 2CNM-E3C emergency drain level
HDL	2HDL-LT23C	Third point heater 2CNM-E3C emergency drain level transmitter
HDL	2HDL-LS24C	Fourth point heater 2CNM-E4C emergency drain level
HDL	2HDL-LT24C	Fourth point heater 2CNM-E4C emergency drain level transmitter
HDL	2HDL-LS9C	Third point heater 2CNM-E3C extreme high level
HDL	2HDL-LT3C	Third point heater 2CNM-E3C normal drain level transmitter
HDL	2HDL-LT4C	Fourth point heater 2CNM-E4C normal water level transmitter

CONTROL COMPONENTS

ZONE H

System Code	Instrument/ Device ID No.	Instrument/Device Function Description
HDL	2HDL-LV5C 2HDL-SOV5C	Fifth point heater 2CNM-E5C normal drain level control valve
IAS	2IAS-TS2A	Compressor precooler temperature high
IAS	2IAS-TS2B	Compressor precooler temperature high
IAS	2IAS-TS2C	Compressor precooler temperature high
IAS	2IAS-TS4A	Compressor aftercooler temperature high
IAS	2IAS-TS4B	Compressor aftercooler temperature high
IAS	2IAS-TS4C	Compressor aftercooler temperature high
SVH	2SVH-HV31C 2SVH-SOV31C	Fourth point heater 2CNM-E4C shell vent valve
SVH	2SVH-HV32C 2SVH-SOV32C	Fourth point heater 2CNM-E4C channel drain valve
SVH	2SVH-HV44C 2SVH-SOV44C	Third point heater 2CNM-E3C shell vent valve
SVH	SVH-HV45C 2SVH-SOV45C	Third point heater 2CNM-E3C channel drain valve
SVH	2SVH-HV26C 2SVH-SOV26C	Sixth point heater 2FWS-E6C channel drain valve

APPENDIX B

CONTROL COMPONENTS

ZONE H

System Code	Instrument/ Device ID No.	Instrument/Device Function Description
SVH	2SVH-HV27C 2SVH-SOV27C	Sixth point heater 2FWS-E6C shell vent valve
SVH	2SVH-HV36C 2SVH-SOV36C	Fifth point heater 2CNM-E5C shell vent valve
SVH	2SVH-HV37C 2SVH-SOV37C	Fifth point heater 2CNM-E5C channel drain valve
SVH	2SVH-HV52C 2SVH-SOV52C	Second point heater 2CNM-DCL3C shell vent valve
SVH	2SVH-HV58C 2SVH-SOV58C	Second point heater 2CNM-DCL2C shell vent valve

CONTROL COMPONENTS

ZONE L

System Code	Instrument/ Device ID No.	Instrument/Device Function Description
CND	2CND-AOV2A	Condensate demineralizer 2CND-DEMN-1A condensate influent valve
CND	2CND-AOV2B	Condensate demineralizer 2CND-DEMN-1B condensate influent valve
CND	2CND-AOV2C	Condensate demineralizer 2CND-DEMN-1C condensate influent valve
CND	2CND-AOV2D	Condensate demineralizer 2CND-DEMN-1D condensate influent valve
CND	2CND-AOV2E	Condensate demineralizer 2CND-DEMN-1E condensate influent valve
CND	2CND-AOV2F	Condensate demineralizer 2CND-DEMN-1F condensate influent valve
CND	2CND-AOV2G	Condensate demineralizer 2CND-DEMN-1G condensate influent valve
CND	2CND-AOV2H	Condensate demineralizer 2CND-DEMN-1H condensate influent valve
CND	2CND-AOV2J	Condensate demineralizer 2CND-DEMN-1J condensate influent valve
CND	2CND-AOV3A	Condensate demineralizer 2CND-DEMN-1A vent valve
CND	2CND-AOV3B	Condensate demineralizer 2CND-DEMN-1B vent valve
CND	2CND-AOV3C	Condensate demineralizer 2CND-DEMN-1C vent valve
CND	2CND-AOV3D	Condensate demineralizer 2CND-DEMN-1D vent valve
CND	2CND-AOV3E	Condensate demineralizer 2CND-DEMN-1E vent valve

CONTROL COMPONENTS

ZONE L

System Code	Instrument/ Device ID No.	Instrument/Device Function Description
CND	2CND-AOV3F	Condensate demineralizer 2CND-DEMN-1F vent valve
CND	2CND-AOV3G	Condensate demineralizer 2CND-DEMN-1G vent valve
CND	2CND-AOV3H	Condensate demineralizer 2CND-DEMN-1H vent valve
CND	2CND-AOV3J	Condensate demineralizer 2CND-DEMN-1J vent valve
CND	2CND-AOV4A	Condensate demineralizer 2CND-DEMN-1A resin inlet valve
CND	2CND-AOV4B	Condensate demineralizer 2CND-DEMN-1B resin inlet valve
CND	2CND-AOV4C	Condensate demineralizer 2CND-DEMN-1C resin inlet valve
CND	2CND-AOV4D	Condensate demineralizer 2CND-DEMN-1D resin inlet valve
CND	2CND-AOV4E	Condensate demineralizer 2CND-DEMN-1E resin inlet valve
CND	2CND-AOV4F	Condensate demineralizer 2CND-DEMN-1F resin inlet valve
CND	2CND-AOV4G	Condensate demineralizer 2CND-DEMN-1G resin inlet valve
CND	2CND-AOV4H	Condensate demineralizer 2CND-DEMN-1H resin inlet valve
CND	2CND-AOV4J	Condensate demineralizer 2CND-DEMN-1J resin inlet valve
CND	2CND-AOV5A	Condensate demineralizer 2CND-DEMN-1A resin outlet valve

ZONE L

System Code	Instrument/ Device ID No.	Instrument/Device Function Description
CND	2CND-AOV5B	Condensate demineralizer 2CND-DEMN-1B resin outlet valve
CND	2CND-AOV5C	Condensate demineralizer 2CND-DEMN-1C resin outlet valve
CND	2CND-AOV5D	Condensate demineralizer 2CND-DEMN-1D resin outlet valve
CND	2CND-AOV5E	Condensate demineralizer 2CND-DEMN-1E resin outlet valve
CND	2CND-AOV5F	Condensate demineralizer 2CND-DEMN-1F resin outlet valve
CND	2CND-AOV5G	Condensate demineralizer 2CND-DEMN-1G resin outlet valve
CND	2CND-AOV5H	Condensate demineralizer 2CND-DEMN-1H resin outlet valve
CND	2CND-AOV5J	Condensate demineralizer 2CND-DEMN-1J resin outlet valve
CND	2CND-AOV6A	Condensate demineralizer 2CND-DEMN-1A resin outlet valve
CND	2CND-AOV6B	Condensate demineralizer 2CND-DEMN-1B resin outlet valve
CND	2CND-AOV6C	Condensate demineralizer 2CND-DEMN-1C resin outlet valve
CND	2CND-AOV6D	Condensate demineralizer 2CND-DEMN-1D resin outlet valve
CND	2CND-AOV6E	Condensate demineralizer 2CND-DEMN-1E resin outlet valve
CND	2CND-AOV6F	Condensate demineralizer 2CND-DEMN-1F resin outlet valve

CONTROL COMPONENTS

ZONE L

System Code	Instrument/ Device ID No.	Instrument/Device Function Description
CND	2CND-AOV6G	Condensate demineralizer 2CND-DEMN-1G resin outlet valve
CND	2CND-AOV6H	Condensate demineralizer 2CND-DEMN-1H resin outlet valve
CND	2CND-AOV6J	Condensate demineralizer 2CND-DEMN-1J resin outlet valve
CND	2CND-AOV7A	Condensate demineralizer 2CND-DEMN-1A condensate effluent valve
CND	2CND-AOV7B	Condensate demineralizer 2CND-DEMN-1B condensate effluent valve
CND	2CND-AOV7C	Condensate demineralizer 2CND-DEMN-1C condensate effluent valve
CND	2CND-AOV7D	Condensate demineralizer 2CND-DEMN-1D condensate effluent valve
CND	2CND-AOV7E	Condensate demineralizer 2CND-DEMN-1E condensate effluent valve
CND	2CND-AOV7F	Condensate demineralizer 2CND-DEMN-1F condensate effluent valve
CND	2CND-AOV7G	Condensate demineralizer 2CND-DEMN-1G condensate effluent valve
CND	2CND-AOV7H	Condensate demineralizer 2CND-DEMN-1H condensate effluent valve
CND	2CND-AOV7J	Condensate demineralizer 2CND-DEMN-1J condensate effluent valve
CND	2CND-CE10A	Condensate demineralizer 2CND-DEMIN-1A outlet conductivity
CND	2CND-CE10B	Condensate demineralizer 2CND-DEMIN-1B outlet conductivity

CONTROL COMPONENTS

ZONE L

System Code	Instrument/ Device ID No.	Instrument/Device Function Description
CND	2CND-CE10C	Condensate demineralizer 2CND-DEMIN-1C outlet conductivity
CND	2CND-CE10D	Condensate demineralizer 2CND-DEMIN-1D outlet conductivity
CND	2CND-CE10E	Condensate demineralizer 2CND-DEMIN-1E outlet conductivity
CND	2CND-CE10F	Condensate demineralizer 2CND-DEMIN-1F outlet conductivity
CND	2CND-CE10G	Condensate demineralizer 2CND-DEMIN-1G outlet conductivity
CND	2CND-CE10H	Condensate demineralizer 2CND-DEMIN-1H outlet conductivity
CND	2CND-CE10J	Condensate demineralizer 2CND-DEMIN-1J outlet conductivity
CND	2CND-CE101	Condensate demineralizer system inlet conductivity
CND	2CND-CE105	Condensate demineralizer system outlet conductivity
CND	2CND-CE322	Condensate demineralizer inlet conductivity
CND	2CND-CE323	Condensate demineralizer outlet conductivity

APPENDIX B
CONTROL COMPONENTS

Zone: N

System Code	Instrument/ Device ID No.	Instrument/Device Function Description
ARC	2ARC-HV16A 2ARC-SOV16A	Air ejector 2ARC-J1A-1 and J1A-2 steam supply strainer blowdown valve
ARC	2ARC-HV17A 2ARC-SOV17A	Air ejector 2ARC-J2A-1 and J2A-2 steam supply strainer blowdown valve
ASS	2ASS-PV125 2ASS-SOV125	Offgas system main steam supply pressure control valve
ASS	2ASS-SOV142	Main steam to offgas system block valve

APPENDIX B
CONTROL COMPONENTS

Zone: P

System Code	Instrument/ Device ID No.	Instrument/Device Function Description
ARC	2ARC-HV16B 2ARC-SOV16B	Air ejector 2ARC-J1B-1 and J1B-2 steam supply strainer blowdown valve
ARC	2ARC-HV17B 2ARC-SOV17B	Air ejector 2ARC-J2B-1 and J2B-2 steam supply strainer blowdown valve
ASS	2ASS-PV107 2ASS-SOV107	Air ejectors main steam supply primary pressure control valve
ASS	2ASS-PV139 2ASS-SOV139	Air ejectors main steam supply backup pressure control valve

APPENDIX B

CONTROL COMPONENTS

ZONE R

System Code	Instrument/ Device ID No.	Instrument/Device Function Description
CCS	2CCS-TV43A	Turbine lube oil cooler 2TML-E1A lube oil outlet temperature control valve
CCS	2CCS-TV43B	Turbine lube oil cooler 2TML-E1B lube oil outlet temperature control valve
TML	2TML-PS101	Turbine bearing oil header pressure low
TML	2TML-PS102	Main shaft oil pump suction pressure low
TML	2TML-PS103	Main shaft oil pump discharge pressure low
TML	2TML-PS104	Turbine bearing oil header pressure low
TML	2TML-PS106	Main shaft oil pump discharge pressure low
TML	2TML-PS107	Turning gear oil pump discharge pressure low
TML	2TML-PS127	Main shaft oil pump discharge pressure low
TML	2TML-SOV13A	Lift pump motor test valve
TML	2TML-SOV13B	Lift pump motor test valve
TML	2TML-SOV13C	Lift pump motor test valve
TML	2TML-SOV13D	Lift pump motor test valve
TML	2TML-SOV13E	Lift pump motor test valve
TML	2TML-SOV13F	Lift pump motor test valve

APPENDIX B

CONTROL COMPONENTS

ZONE R

System Code	Instrument/ Device ID No.	Instrument/Device Function Description
TML	2TML-SOV13G	Lift pump motor test valve
TML	2TML-SOV114	Turbine generator lube oil suction pump test valve
TML	2TML-SOV115	Turbine generator lube oil turning gear oil pump A test valve
TML	2TML-SOV116	Turbine generator lube oil turning gear oil pump B test valve
TML	2TML-SOV117	Turbine generator lube oil emergency bearing oil pump A test valve
TML	2TML-SOV118	Turbine generator lube oil emergency bearing oil pump B
TML	2TML-TS2A	Thermostat for LPM No. 1
TML	2TML-TS2B	Thermostat for LPM No. 2
TML	2TML-TS2C	Thermostat for LPM No. 3
TML	2TML-TS2D	Thermostat for LPM No. 4
TML	2TML-TS2E	Thermostat for LPM No. 5
TML	2TML-TS2F	Thermostat for LPM No. 6
TML	2TML-TS2G	Thermostat for LPM No. 7
TML	2TML-TS2H	Thermostat for LPM No. 8

APPENDIX B

CONTROL COMPONENTS

ZONE S

System Code	Instrument/ Device ID No.	Instrument/Device Function Description
ASS	2ASS-PIC113	Main steam to clean steam reboilers steam pressure control valve indicating controller
ASS	2ASS-PIC146	Auxiliary boiler steam to clean steam reboilers steam pressure control valve indicating controller
ASS	2ASS-PC106	Building heating intermediate heat exchangers steam inlet pressure control valve controller
CCS	2CCS-I/P43A	Turbine lube oil cooler 2TML-E1A lube oil outlet temperature control current to pneumatic transducer .
CCS	2CCS-I/P43B	Turbine lube oil cooler 2TML-E1B lube oil outlet temperature control current to pneumatic transducer
CRS	2CRS-PT103	Moisture separator reheater 2MSS-E1B intermediate shell steam pressure transmitter (setpoint input to main steam supply pressure control to reheaters)
CRS	2CRS-PT102	High pressure turbine to moisture separator reheater intermediate steam pressure transmitter
MSS	2MSS-AOV88A 2MSS-SOV88A	Main steam equalizing pressure low point drain valve to main condenser
MSS	2MSS-AOV88B 2MSS-SOV88B	Main steam combined header drain valve
MSS	2MSS-PT101	Main steam supply to clean steam reboilers pressure transmitter
MSS	2MSS-PT22B	Moisture separator reheater 2MSS-E1B regulated inlet steam pressure transmitter

APPENDIX B

CONTROL COMPONENTS

ZONE S

System Code	Instrument/ Device ID No.	Instrument/Device Function Description
MSS	2MSS-PT96B (C12-N054-B)	Turbine first stage shell pressure
MSS	2MSS-PT143 (M-SPS-HQ-B)	Turbine inlet steam pressure
MSS	2MSS-PT144 (M-SPS-HQ-A)	Turbine inlet steam pressure
MSS	2MSS-PT148 (EPT-3)	Turbine steam chest pressure
MSS	2MSS-PT22A	Moisture separator reheater 2MSS-E1A regulated inlet steam pressure transmitter
MSS	2MSS-PT96A (C12-N054-A)	Turbine first stage shell pressure
TME	2TME-LIC13A	Clean steam reboiler 2TME-E1A shell water level control valve indicating controller
TME	2TME-LIC13B	Clean steam reboiler 2TME-E1B shell water level control valve indicating controller
TME	2TME-PIC122	Main steam to gland seal steam pressure control valve indicating controller

APPENDIX B

CONTROL COMPONENTS

ZONE Tunnel

System Code	Instrument/ Device ID No.	Instrument/Device Function Description
MSS	2MSS-AOV85A 2MSS-SOV85A	Main steam Line A drain valve
MSS	2MSS-AOV85B 2MSS-SOV85B	Main steam Line B drain valve
MSS	2MSS-AOV85C 2MSS-SOV85C	Main steam Line C drain valve
MSS	2MSS-AOV85D 2MSS-SOV85D	Main steam Line D drain valve
MSS	2MSS-AOV87A 2MSS-SOV87A	Main steam Line A low point drain valve
MSS	2MSS-AOV87B 2MSS-SOV87B	Main steam Line B low point drain valve
MSS	2MSS-AOV87C 2MSS-SOV87C	Main steam Line C low point drain valve
MSS	2MSS-AOV87D 2MSS-SOV87D	Main steam Line D low point drain valve
FWS	2FWS-SOV23A	Feedwater system testable check valve
FWS	2FWS-SOV23B	Feedwater system testable check valve

APPENDIX B

CONTROL COMPONENTS

ZONE U

System Code	Instrument/ Device ID No.	Instrument/Device Function Description
CND	2CND-AOV218	Ultrasonic resin storage tank 2CND-TK5 vent valve
CND	2CND-AOV219	Ultrasonic resin storage tank 2CND-TK5 air inlet valve
CND	2CND-AOV220	Ultrasonic resin storage tank 2CND-TK5 resin inlet valve
CND	2CND-AOV221	Ultrasonic resin storage tank 2CND-TK5 sluicing water inlet valve
CND	2CND-AOV222	Ultrasonic resin storage tank 2CND-TK5 drain outlet valve
CND	2CND-AOV223	Ultrasonic resin storage tank 2CND-TK5 resin outlet valve
CND	2CND-AOV224	Ultrasonic resin cleaner 2CND-URC1 resin outlet valve
CND	2CND-FCV225	Ultrasonic resin cleaner 2CND-URC1 level control valve
CND	2CND-AOV226	Ultrasonic resin receiver tank 2CND-TK4 vent valve
CND	2CND-AOV227	Ultrasonic resin receiver tank 2CND-TK4 air inlet valve
CND	2CND-AOV228	Ultrasonic resin receiver tank 2CND-TK4 resin inlet valve
CND	2CND-AOV229	Ultrasonic resin receiver tank 2CND-TK4 resin outlet valve to ultrasonic resin cleaner
CND	2CND-AOV230	Ultrasonic resin receiver tank 2CND-TK4 resin outlet valve
CND	2CND-AOV231	Ultrasonic resin receiver tank 2CND-TK4 drain outlet valve
CND	2CND-AOV232	Ultrasonic resin receiver tank 2CND-TK4 sluicing water inlet valve

APPENDIX B

CONTROL COMPONENTS

ZONE U

System Code	Instrument/ Device ID No.	Instrument/Device Function Description
CND	2CND-AOV233	Ultrasonic resin cleaning unregulated sluicing water supply valve
CND	2CND-PCV234	Ultrasonic resin cleaning unregulated sluicing water pressure control valve
CND	2CND-FIS238	Water flow to eductor
CND	2CND-FIS264	URC sluice water supply flow
CND	2CND-LS235	URC resin cleaner level

APPENDIX B

CONTROL COMPONENTS

ZONE W

System Code	Instrument/ Device ID No.	Instrument/Device Function Description
ASS	2ASS-TV5A 2ASS-SOV5A	Building heating intermediate heat exchanger 2HVH-E1A temperature control valve
ASS	2ASS-TV5B 2ASS-SOV5B	Building heating intermediate heat exchanger 2HVH-E1B temperature control valve

APPENDIX B

CONTROL COMPONENTS

ZONE X

System Code	Instrument/ Device ID No.	Instrument/Device Function Description
CND	2CND-AE274	Waste neutralizing tank 2CND-TK12 recirculation water pH analyzer
CND	2CND-AOV106	Cation regeneration tank 2CND-TK1 rinse water inlet valve
CND	2CND-AOV107	Anion regeneration tank 2CND-TK2 rinse water inlet valve
CND	2CND-AOV108	Resin mix and hold tank 2CND-TK3 rinse water inlet valve
CND	2CND-AOV113	Cation regeneration tank 2CND-TK1 top air inlet valve
CND	2CND-AOV114	Anion regeneration tank 2CND-TK2 top air inlet valve
CND	2CND-AOV115	Anion regeneration tank 2CND-TK2 vent valve
CND	2CND-AOV116	Resin mix and hold tank 2CND-TK3 top air inlet valve
CND	2CND-AOV117	Resin mix and hold tank 2CND-TK3 vent valve
CND	2CND-AOV118	Condensate demineralizer system transfer air inlet valve
CND	2CND-AOV124	Cation regeneration tank 2CND-TK1 dilute acid inlet valve
CND	2CND-AOV125	Anion regeneration tank 2CND-TK2 dilute caustic inlet valve
CND	2CND-AOV129	Cation regeneration tank 2CND-TK1 resin inlet valve
CND	2CND-AOV130	Anion regeneration tank 2CND-TK2 resin inlet valve
CND	2CND-AOV131	Resin mix and hold tank 2CND-TK3 bottom air inlet valve

APPENDIX B

CONTROL COMPONENTS

ZONE X

System Code	Instrument/ Device ID No.	Instrument/Device Function Description
CND	2CND-AOV132	Cation regeneration tank 2CND-TK1 bottom resin outlet valve
CND	2CND-AOV133	Anion regeneration tank 2CND-TK2 bottom resin outlet valve
CND	2CND-AOV134	Resin mix and hold tank 2CND-TK3 bottom resin outlet valve
CND	2CND-AOV135	Condensate demineralizer 2CND-DEMN1J resin transfer header block valve
CND	2CND-AOV136	Resin cleaning tanks flushing water supply valve
CND	2CND-AOV137	Condensate demineralizer 2CND-DEMN1J resin return header block valve
CND	2CND-AOV138	Condensate demineralizer yessel top water supply valve
CND	2CND-AOV140	Cation regeneration tank 2CND-TK1 bottom air inlet valve
CND	2CND-AOV141	Cation regeneration tank 2CND-TK1 rinse outlet valve
CND	2CND-AOV142	Cation regeneration tank 2CND-TK1 rinse outlet valve to recovered acid tank 2CND-TK9
CND	2CND-AOV143	Anion regeneration tank 2CND-TK2 bottom air inlet valve
CND	2CND-AOV144	Anion regeneration tank 2CND-TK2 rinse outlet valve
CND	2CND-AOV145	Anion regeneration tank 2CND-TK2 outlet valve to recovered caustic tank 2CND-TK10
CND	2CND-AOV146	Resin mix and hold tank 2CND-TK3 rinse outlet valve
CND	2CND-AOV148	Resin mix and hold tank 2CND-TK3 bottom air inlet valve

APPENDIX B

CONTROL COMPONENTS

ZONE X

System Code	Instrument/ Device ID No.	Instrument/Device Function Description
CND	2CND-AOV149	Resin transfer air header inlet flow valve
CND	2CND-AOV150	Resin transfer air header drain valve to low conductivity waste tank 2CND-TK13
CND	2CND-AOV155	Cation regeneration tank 2CND-TK1 backwash inlet valve
CND	2CND-AOV156	Anion regeneration tank 2CND-TK2 backwash inlet valve
CND	2CND-AOV162	Resin transfer header block valve to resin receiver tank 2CND-TK4
CND	2CND-AOV163	Cleaned resin storage tank 2CND-TK5 resin transfer header block valve
CND	2CND-AOV164	Resin transfer header block valve to liquid radioactive waste system
CND	2CND-AOV165	Regeneration tanks backwash outlet to low conductivity waste tank 2CND-TK13 block valve
CND	2CND-AOV166	Regeneration tanks backwash outlet to waste neutralizing tank 2CND-TK12 block valve
CND	2CND-AOV174	Recovered acid tank 2CND-TK9 outlet valve
CND	2CND-AOV183	Condensate makeup and drawoff system to condensate demineralizer system condensate inlet valve
CND	2CND-AOV184	Regulated sluicing water to regeneration tanks supply valve
CND	2CND-AOV194	Acid dilution water supply valve
CND	2CND-AOV195	Strong acid supply block valve
CND	2CND-AOV196	Strong acid bleed valve to low conductivity waste tank 2CND-TK13

APPENDIX B

CONTROL COMPONENTS

ZONE X

System Code	Instrument/ Device ID No.	Instrument/Device Function Description
CND	2CND-AOV206	Caustic dilution water supply valve
CND	2CND-AOV207	Strong caustic bleed valve to low conductivity waste tank 2CND-TK13
CND	2CND-AOV208	Strong caustic supply block valve
CND	2CND-AOV216	Recovered caustic tank 2CND-TK10 outlet valve
CND	2CND-AOV271 2CND-SOV271	Waste neutralizing tank 2CND-TK12 recirculation valve
CND	2CND-AOV273 2CND-SOV273	Waste neutralizing tank 2CND-TK12 discharge valve to radioactive liquid waste system regenerant waste tanks
CND	2CND-AOV276	Cation regeneration tank 2CND-TK1 backwash outlet valve
CND	2CND-AOV277	Anion regeneration tank 2CND-TK2 backwash outlet valve
CND	2CND-AOV309	Acid day tank 2CND-TK6 to mixing tee strong acid shutoff valve
CND	2CND-AOV310	Caustic day tank 2CND-TK7 to mixing tee strong caustic shutoff valve
CND	2CND-AOV320	Cation regeneration tank 2CND-TK1 rinse condensate valve to turbine plant sampling system
CND	2CND-AOV321	Anion regeneration tank 2CND-TK2 rinse condensate valve to turbine plant sampling system
CND	2CND-AOV334	Cation regeneration tank 2CND-TK1 cation resin feed block valve
CND	2CND-AOV335	Anion regeneration tank 2CND-TK2 anion resin feed block valve

APPENDIX B

CONTROL COMPONENTS

ZONE X

System Code	Instrument/ Device ID No.	Instrument/Device Function Description
CND	2CND-AOV338 2CND-SOV338	Low conductivity waste tank 2CND-TK13 waste discharge valve to liquid radioactive waste system waste collector tanks
CND	2CND-AOV339 2CND-SOV339	Low conductivity waste tank 2CND-TK13 waste discharge valve to waste neutralizing tank 2CND-TK12
CND	2CND-AOV341	Resin mix and hold tank 2CND-TK3 rinse condensate valve to turbine plant sampling system
CND	2CND-AOV342	Cation regeneration tank 2CND-TK1 vent valve
CND	2CND-PV121	Service air supply to condensate demineralizer system pressure control valve
CND	2CND-PV188	Regulated sluicing water pressure control valve
CND	2CND-TV199	Dilute caustic temperature control valve
CND	2CND-CE157	Condensate demineralizer cation rinse conductivity
CND	2CND-CE158	Condensate demineralizer anion rinse conductivity
CND	2CND-CE159	Condensate demineralizer mix and hold rinse conductivity
CND	2CND-CE198	Condensate demineralizer dilute acid concentration
CND	2CND-CE251	Condensate demineralizer dilute caustic conductivity
CND	2CND-CE268	Condensate demineralizer waste tank 2CND-TK13 outlet conductivity
CND	2CND-CE308	Condensate demineralizer regeneration system effluent

APPENDIX B

CONTROL COMPONENTS

ZONE X

System Code	Instrument/ Device ID No.	Instrument/Device Function Description
CND	2CND-FIS190	Condensate demineralizer acid dilution water inlet flow
CND	2CND-FIS213	Condensate demineralizer caustic dilution water flow
CND	2CND-LS256	Condensate demineralizer hot water tank 2CND-TK8 level low
CND	2CND-LS28A	Condensate demineralizer chemical waste sump level low
CND	2CND-LS28B	Condensate demineralizer chemical waste sump level low
CND	2CND-LT169	Condensate demineralizer recovered acid tank level
CND	2CND-LT178	Condensate demineralizer recovered caustic tank level
CND	2CND-LT267	Condensate demineralizer low conductivity tank 2CND-TK13 level low
CND	2CND-LT281	Condensate demineralizer neutralizing tank 2CND-TK12 level low
CND	2CND-TIS176	Condensate demineralizer recovered caustic tank temperature
CND	2CND-TIS187	Condensate demineralizer condensate inlet temperature
CND	2CND-TIS199	Condensate demineralizer dilute caustic temperature
CND	2CND-TIS311	Condensate demineralizer hot water tank 2CND-TK8 temperature high/low
CND	2CND-TS211	Condensate demineralizer hot water tank 2CND-TK8 temperature control
CND	2CND-LS185	Condensate demineralizer neutralizing tank 2CND-TK12 level high/low

CONTROL COMPONENTS

ZONE X

System Code	Instrument/ Device ID No.	Instrument/Device Function Description
CND	2CND-LS283	Condensate demineralizer neutralizing tank 2CND-TK12 level high/low
CND	2CND-LS345	Condensate demineralizer low conductivity tank 2CND-TK13 level low

APPENDIX C

List of High Energy Lines

NOTES

1. Zones M and U have no high energy lines but have nonsafety grade components.

2. Zones AF, E and J have high energy lines but no control components.

3. Zone Y has no high energy line and no nonsafety grade components.

4. Zones within the primary containment were considered to be combined as one zone and the associated high energy lines are shown on the FSAR figures listed in this appendix.

5. Zones in the secondary containment and the auxiliary building were combined into one zone for combined effects analysis. The associated high energy lines are shown on the FSAR figures in this appendix for the secondary containment and individually for the auxiliary building.

APPENDIX C

ZONE: Primary Containment

FSAR Figures

3.6A-12
3.6A-13
3.6A-15 through 17
3.6A-18 (Sheet 1 of 7)
3.6A-19 through 20
3.6A-22 through 23
3.6A-25 through 33
3.6A-42

APPENDIX C

ZONE: Secondary Containment

FSAR Figures

3.6A-14
3.6A-18 (Sheet 2 through 7)
3.6A-21
3.6A-24
3.6A-34 through 41
3.6A-43 through 51

APPENDIX C

ZONE: ABN17503

2ICS-004-36-2
2ICS-010-62-2
2WCS-010-316-3

APPENDIX C

ZONE: MST

2FWS-024-027-4	2MSS-002-182-4
2FWS-024-028-4	2MSS-002-183-4
2FWS-024-050-1	2MSS-002-184-4
2FWS-024-051-1	2MSS-002-187-4
2MSS-002-013-4	2MSS-002-188-4
2MSS-002-016-4	2MSS-006-012-4
2MSS-002-019-4	2MSS-006-018-4
2MSS-002-022-4	2MSS-006-021-4
2MSS-002-097-4	2MSS-006-117-4
2MSS-002-098-4	2MSS-026-151-4
2MSS-002-173-4	2MSS-026-152-4
2MSS-002-176-4	2MSS-026-153-4
2MSS-002-177-4	2MSS-026-154-4
2MSS-002-178-4	2MSS-028-001-4
2MSS-002-179-4	2MSS-028-003-4
2MSS-002-180-4	2MSS-028-005-4
2MSS-002-181-4	2MSS-028-007-4

APPENDIX C

ZONE: A

LINE NUMBER	LINE NUMBER	LINE NUMBER	LINE NUMBER
2-ARC-010-607-4	2-DTH-006-310-4	2-ESS-026-128-4	2-SVH-002-234-4
2-ARC-010-608-4	2-DTH-006-311-4	2-FHR-020-004-4	2-SVH-002-261-4
2-ASS-010-504-4	2-DTH-006-312-4	2-FHR-020-005-4	2-SVH-002-264-4
2-ASS-010-520-4	2-DTH-006-470-4	2-FHR-020-006-4	2-SVH-002-704-4
2-CNA-006-002-4	2-DTH-010-179-4	2-FHS-008-117-4	2-SVH-002-734-4
2-CNA-008-180-4	2-DTH-010-181-4	2-FHS-008-120-4	2-SVH-002-764-4
2-CNA-150-006-4	2-DTH-012-297-4	2-FHS-008-122-4	2-SVH-004-105-4
2-CNH-006-321-4	2-DTH-018-313-4	2-FHS-014-142-4	2-SVH-004-106-4
2-CNH-006-322-4	2-DTH-020-068-4	2-FHS-014-143-4	2-SVH-004-135-4
2-CNH-006-323-4	2-DTH-025-170-4	2-FHS-014-144-4	2-SVH-004-136-4
2-DSH-016-001-4	2-DTH-025-173-4	2-HDL-002-103-4	2-SVH-004-165-4
2-DSH-016-008-4	2-DTH-025-174-4	2-HDL-002-104-4	2-SVH-004-166-4
2-DSH-016-026-4	2-DTH-025-175-4	2-HDL-002-113-4	2-SVH-004-207-4
2-DSR-006-105-4	2-DTH-025-176-4	2-HDL-002-114-4	2-SVH-004-237-4
2-DSR-006-106-4	2-DTH-025-177-4	2-HDL-002-123-4	2-SVH-004-267-4
2-DSR-008-104-4	2-DTH-125-143-4	2-HDL-002-124-4	2-SVH-008-404-4
2-DSR-008-121-4	2-DTH-125-145-4	2-HDL-004-105-4	2-SVH-008-434-4
2-DSR-008-122-4	2-DTH-150-144-4	2-HDL-004-115-4	2-SVH-008-464-4
2-DSR-016-001-4	2-DTH-150-146-4	2-HDL-004-125-4	2-SVH-008-504-4
2-DSR-016-007-4	2-DTH-150-231-4	2-HDL-004-209-4	2-SVH-008-534-4
2-DSR-016-008-4	2-DTH-150-232-4	2-HDL-004-219-4	2-SVH-008-564-4
2-DSR-016-021-4	2-DTH-150-233-4	2-HDL-004-229-4	2-SVH-008-604-4
2-DSR-018-107-4	2-DTH-150-234-4	2-HDL-014-101-4	2-SVH-008-634-4
2-DSR-018-108-4	2-DTH-150-235-4	2-HDL-014-111-4	2-SVH-008-664-4
2-DTH-002-005-4	2-DTH-150-236-4	2-HDL-014-121-4	2-SVH-008-805-4
2-DTH-002-006-4	2-DTH-150-263-4	2-HDL-014-201-4	2-SVH-008-835-4
2-DTH-002-007-4	2-DTH-150-366-4	2-HDL-014-211-4	2-SVH-008-865-4
2-DTH-002-069-4	2-DTH-150-367-4	2-HDL-014-221-4	2-SVH-024-901-4
2-DTH-002-070-4	2-ESS-003-004-4	2-HRS-026-001-4	2-SVH-024-931-4
2-DTH-002-071-4	2-ESS-004-037-4	2-HRS-026-002-4	2-SVH-024-961-4
2-DTH-002-072-4	2-ESS-004-038-4	2-HRS-026-003-4	2-SVH-025-205-4
2-DTH-002-073-4	2-ESS-006-251-4	2-HRS-026-004-4	2-SVH-025-206-4
2-DTH-002-074-4	2-ESS-014-001-4	2-HRS-026-005-4	2-SVH-025-235-4
2-DTH-002-075-4	2-ESS-014-002-4	2-HRS-026-006-4	2-SVH-025-236-4
2-DTH-002-076-4	2-ESS-014-024-4	2-HSS-010-189-4	2-SVH-025-265-4
2-DTH-002-333-4	2-ESS-014-027-4	2-OFG-003-200-4	2-SVH-025-266-4
2-DTH-002-334-4	2-ESS-014-030-4	2-OFG-003-201-4	2-THE-003-057-4
2-DTH-002-335-4	2-ESS-014-120-4	2-SVH-002-101-4	2-THE-003-058-4
2-DTH-002-511-4	2-ESS-014-121-4	2-SVH-002-104-4	2-THE-003-078-4
2-DTH-002-512-4	2-ESS-014-122-4	2-SVH-002-131-4	2-THE-003-080-4
2-DTH-003-142-4	2-ESS-026-034-4	2-SVH-002-134-4	2-THE-006-079-4
2-DTH-004-275-4	2-ESS-026-039-4	2-SVH-002-161-4	2-THE-012-076-4
2-DTH-004-276-4	2-ESS-026-042-4	2-SVH-002-201-4	
2-DTH-004-314-4	2-ESS-026-126-4	2-SVH-002-204-4	
2-DTH-006-309-4	2-ESS-026-127-4	2-SVH-002-231-4	

APPENDIX C

ZONE: AA

LINE NUMBER	LINE NUMBER	LINE NUMBER	LINE NUMBER
2-ARC-012-009-4			
2-ASS-002-132-4			
2-ASS-002-133-4			
2-ASS-003-502-4			
2-ASS-150-010-4			
2-ASS-150-039-4			
2-OFG-003-006-4			
2-OFG-003-012-4			
2-OFG-003-013-4			
2-OFG-003-026-4			
2-OFG-003-027-4			
2-OFG-003-033-4			
2-OFG-003-035-4			
2-OFG-003-044-4			
2-OFG-003-059-4			
2-OFG-003-060-4			
2-OFG-003-061-4			
2-OFG-003-062-4			
2-OFG-003-063-4			
2-OFG-003-064-4			
2-OFG-003-065-4			
2-OFG-003-066-4			
2-OFG-003-067-4			
2-OFG-003-068-4			
2-OFG-003-069-4			
2-OFG-003-083-4			
2-OFG-003-092-4			
2-OFG-003-197-4			
2-OFG-003-198-4			
2-OFG-008-228-4			
2-OFG-008-229-4			
2-OFG-012-003-4			
2-OFG-012-004-4			
2-OFG-012-005-4			
2-OFG-012-009-4			
2-OFG-012-187-4			

APPENDIX C

ZONE: AB

LINE NUMBER	LINE NUMBER	LINE NUMBER	LINE NUMBER
2ASS-016-013-4			
2ASS-016-014-4			
2HVH-004-025-4			
2HVH-004-026-4			
2THE-006-041-4			
2THE-008-411-4			
2THE-008-412-4			
2THE-010-038-4			
2THE-012-066-4			
2THE-012-076-4			
2THE-012-077-4			
2THE-016-005-4			
2THE-016-006-4			

APPENDIX C

ZONE: AC

LINE NUMBER	LINE NUMBER	LINE NUMBER	LINE NUMBER
2-ASS-016-013-4			
2-ASS-016-014-4			
2-CNA-002-013-4			
2-CNA-002-015-4			
2-CNA-004-014-4			
2-CNA-006-002-4			
2-CNA-006-052-4			
2-CNA-150-006-4			
2-CNA-150-044-4			
2-THE-003-055-4			
2-THE-003-057-4			
2-THE-003-059-4			
2-THE-008-084-4			
2-THE-012-076-4			
2-THE-016-005-4			
2-THE-016-006-4			

APPENDIX C

ZONE: AD

LINE NUMBER	LINE NUMBER	LINE NUMBER	LINE NUMBER
2-ASS-016-013-4			
2-ASS-016-014-4			
2-CNA-002-016-4			
2-CNA-002-020-4			
2-CNA-004-017-4			
2-CNA-006-008-4			
2-CNA-006-018-4			
2-CNA-150-055-4			
2-CNA-150-056-4			
2-THE-003-055-4			
2-THE-003-060-4			
2-THE-008-085-4			
2-THE-012-077-4			

APPENDIX C

ZONE: AE

LINE NUMBER	LINE NUMBER	LINE NUMBER	LINE NUMBER
2-THE-006-041-4			
2-THE-010-038-4			

APPENDIX C

ZONE: AF

LINE NUMBER	LINE NUMBER	LINE NUMBER	LINE NUMBER
2-HVH-004-025-4			
2-HVH-004-026-4			

APPENDIX C

ZONE: B

LINE NUMBER	LINE NUMBER	LINE NUMBER	LINE NUMBER
2-ARC-025-015-4	2-DSH-012-010-4	2-DTH-003-027-4	2-DTH-150-487-4
2-ASS-003-003-4	2-DSH-012-011-4	2-DTH-003-060-4	2-DTH-150-499-4
2-ASS-003-026-4	2-DSH-012-012-4	2-DTH-003-344-4	2-DTH-150-513-4
2-ASS-003-201-4	2-DSH-012-013-4	2-DTH-003-422-4	2-DTH-150-514-4
2-ASS-003-211-4	2-DSH-012-014-4	2-DTH-004-407-4	2-DTH-150-515-4
2-ASS-003-502-4	2-DSH-012-047-4	2-DTH-004-420-4	2-DTH-150-516-4
2-ASS-006-001-4	2-DSH-016-001-4	2-DTH-004-471-4	2-DTH-150-520-4
2-ASS-006-011-4	2-DSH-016-007-4	2-DTH-004-519-4	2-ESS-006-251-4
2-ASS-006-017-4	2-DSH-016-008-4	2-DTH-006-417-4	2-HDH-014-603-4
2-ASS-006-070-4	2-DSH-016-048-4	2-DTH-008-414-4	2-HDH-014-604-4
2-ASS-006-125-4	2-DSH-018-049-4	2-DTH-016-464-4	2-HDH-014-613-4
2-ASS-006-126-4	2-DSH-020-051-4	2-DTH-018-463-4	2-HDH-014-614-4
2-ASS-006-140-4	2-DSR-002-011-4	2-DTH-020-010-4	2-HDH-014-623-4
2-ASS-006-147-4	2-DSR-002-013-4	2-DTH-025-170-4	2-HDH-014-624-4
2-ASS-006-400-4	2-DSR-002-120-4	2-DTH-025-176-4	2-HDL-002-413-4
2-ASS-006-620-4	2-DSR-004-012-4	2-DTH-025-177-4	2-HDL-002-433-4
2-ASS-008-146-4	2-DSR-006-010-4	2-DTH-150-041-4	2-HDL-002-453-4
2-ASS-008-503-4	2-DSR-006-102-4	2-DTH-150-056-4	2-HDL-006-134-4
2-ASS-010-504-4	2-DSR-008-104-4	2-DTH-150-057-4	2-HDL-006-135-4
2-ASS-012-063-4	2-DSR-016-001-4	2-DTH-150-058-4	2-HDL-006-136-4
2-ASS-012-141-4	2-DSR-016-007-4	2-DTH-150-059-4	2-HDL-008-102-4
2-ASS-150-512-4	2-DSR-016-008-4	2-DTH-150-064-4	2-HDL-008-112-4
2-ASS-150-517-4	2-DSR-024-009-4	2-DTH-150-065-4	2-HDL-008-122-4
2-ASS-150-518-4	2-DTH-002-014-4	2-DTH-150-111-4	2-HDL-008-202-4
2-CHA-003-303-4	2-DTH-002-015-4	2-DTH-150-135-4	2-HDL-008-203-4
2-CHA-003-304-4	2-DTH-002-028-4	2-DTH-150-139-4	2-HDL-008-205-4
2-CHA-006-052-4	2-DTH-002-029-4	2-DTH-150-140-4	2-HDL-008-212-4
2-CHA-150-019-4	2-DTH-002-030-4	2-DTH-150-185-4	2-HDL-008-213-4
2-CHA-150-021-4	2-DTH-002-061-4	2-DTH-150-186-4	2-HDL-008-215-4
2-CHI-002-093-4	2-DTH-002-062-4	2-DTH-150-214-4	2-HDL-008-223-4
2-CHI-002-094-4	2-DTH-002-062-4	2-DTH-150-231-4	2-HDL-008-225-4
2-CHI-002-095-4	2-DTH-002-063-4	2-DTH-150-232-4	2-HDL-008-235-4
2-CHI-012-034-4	2-DTH-002-069-4	2-DTH-150-233-4	2-HDL-008-302-4
2-CHI-012-035-4	2-DTH-002-070-4	2-DTH-150-234-4	2-HDL-008-303-4
2-CHS-002-033-4	2-DTH-002-071-4	2-DTH-150-235-4	2-HDL-008-304-4
2-CHS-003-025-4	2-DTH-002-072-4	2-DTH-150-236-4	2-HDL-008-312-4
2-CHS-003-034-4	2-DTH-002-337-4	2-DTH-150-343-4	2-HDL-008-314-4
2-CHS-004-024-4	2-DTH-002-339-4	2-DTH-150-400-4	2-HDL-008-322-4
2-CHS-004-095-4	2-DTH-002-341-4	2-DTH-150-403-4	2-HDL-008-324-4
2-CHS-006-040-4	2-DTH-002-457-4	2-DTH-150-405-4	2-HDL-014-101-4
2-DSH-002-016-4	2-DTH-002-458-4	2-DTH-150-412-4	2-HDL-014-111-4
2-DSH-002-018-4	2-DTH-002-459-4	2-DTH-150-415-4	2-HDL-014-121-4
2-DSH-004-017-4	2-DTH-002-460-4	2-DTH-150-473-4	2-HDL-016-503-4
2-DSH-006-053-4	2-DTH-002-461-4	2-DTH-150-479-4	2-HDL-016-504-4
2-DSH-012-009-4	2-DTH-002-462-4	2-DTH-150-480-4	2-HDL-016-513-4

APPENDIX C

ZONE: B

LINE NUMBER	LINE NUMBER	LINE NUMBER	LINE NUMBER
2-HDL-016-514-4	2-SVH-003-337-4		
2-HDL-016-523-4	2-SVH-003-367-4		
2-HDL-016-524-4	2-SVH-004-992-4		
2-HDL-018-402-4	2-SVH-004-993-4		
2-HDL-018-403-4	2-SVH-004-994-4		
2-HDL-018-422-4	2-SVH-006-995-4		
2-HDL-018-423-4	2-SVH-010-902-4		
2-HDL-018-442-4	2-SVH-010-932-4		
2-HDL-018-443-4	2-SVH-010-962-4		
2-HVH-006-023-4	2-THE-003-078-4		
2-HVH-006-024-4	2-THE-003-080-4		
2-HSS-002-147-4	2-THE-004-413-4		
2-HSS-002-148-4	2-THE-006-079-4		
2-HSS-002-177-4	2-THE-008-075-4		
2-HSS-002-178-4	2-THE-008-084-4		
2-HSS-002-180-4	2-THE-008-085-4		
2-HSS-002-181-4	2-THE-012-077-4		
2-HSS-016-026-4	2-THE-012-418-4		
2-HSS-018-010-4			
2-HSS-018-034-4			
2-HSS-028-006-4			
2-HSS-028-008-4			
2-HSS-150-251-4			
2-HSS-150-252-4			
2-HSS-150-257-4			
2-HSS-150-258-4			
2-SVH-002-101-4			
2-SVH-002-161-4			
2-SVH-002-201-4			
2-SVH-002-231-4			
2-SVH-002-261-4			
2-SVH-002-302-4			
2-SVH-002-332-4			
2-SVH-002-362-4			
2-SVH-002-402-4			
2-SVH-002-407-4			
2-SVH-002-432-4			
2-SVH-002-437-4			
2-SVH-002-462-4			
2-SVH-002-467-4			
2-SVH-002-991-4			
2-SVH-003-202-4			
2-SVH-003-232-4			
2-SVH-003-262-4			
2-SVH-003-307-4			

APPENDIX C

ZONE: C

LINE NUMBER	LINE NUMBER	LINE NUMBER	LINE NUMBER
2-ARC-010-607-4	2-DSH-004-035-4	2-DTH-125-143-4	2-ESS-014-027-4
2-ARC-010-608-4	2-DSH-006-054-4	2-DTH-125-145-4	2-ESS-014-030-4
2-ASS-003-502-4	2-DSH-012-027-4	2-DTH-150-111-4	2-ESS-016-016-4
2-ASS-006-082-4	2-DSH-012-028-4	2-DTH-150-144-4	2-ESS-016-019-4
2-ASS-006-126-4	2-DSH-012-029-4	2-DTH-150-146-4	2-ESS-016-021-4
2-ASS-008-083-4	2-DSH-012-030-4	2-DTH-150-214-4	2-ESS-016-033-4
2-ASS-010-080-4	2-DSH-012-031-4	2-DTH-150-513-4	2-ESS-016-200-4
2-ASS-010-081-4	2-DSH-012-032-4	2-DTH-150-514-4	2-ESS-018-011-4
2-ASS-010-084-4	2-DSH-012-037-4	2-ESS-002-006-4	2-ESS-018-012-4
2-ASS-010-520-4	2-DSH-016-001-4	2-ESS-002-008-4	2-ESS-020-003-4
2-ASS-012-063-4	2-DSH-016-019-4	2-ESS-002-010-4	2-ESS-024-013-4
2-ASS-016-013-4	2-DSH-016-025-4	2-ESS-002-017-4	2-ESS-026-034-4
2-ASS-016-014-4	2-DSH-016-026-4	2-ESS-002-018-4	2-ESS-026-039-4
2-ASS-150-071-4	2-DSH-016-038-4	2-ESS-002-020-4	2-ESS-026-042-4
2-ASS-150-072-4	2-DSH-018-039-4	2-ESS-002-022-4	2-ESS-150-153-4
2-CNA-003-318-4	2-DSH-020-041-4	2-ESS-002-023-4	2-FHR-010-001-4
2-CNA-003-414-4	2-DSR-002-024-4	2-ESS-002-025-4	2-FHR-010-002-4
2-CNA-003-415-4	2-DSR-002-026-4	2-ESS-002-028-4	2-FHR-010-003-4
2-CNA-006-002-4	2-DSR-002-042-4	2-ESS-002-031-4	2-FHR-020-004-4
2-CNA-006-008-4	2-DSR-002-119-4	2-ESS-002-035-4	2-FHR-020-005-4
2-CNA-006-018-4	2-DSR-004-025-4	2-ESS-002-040-4	2-FHR-020-006-4
2-CNA-006-052-4	2-DSR-006-073-4	2-ESS-002-043-4	2-FHS-008-117-4
2-CNA-150-006-4	2-DSR-006-101-4	2-ESS-002-070-4	2-FHS-008-120-4
2-CNA-150-056-4	2-DSR-006-105-4	2-ESS-002-071-4	2-FHS-008-122-4
2-CNH-004-318-4	2-DSR-006-106-4	2-ESS-002-085-4	2-FHS-012-119-4
2-CNH-004-319-4	2-DSR-008-103-4	2-ESS-002-086-4	2-FHS-016-116-4
2-CNH-004-320-4	2-DSR-008-104-4	2-ESS-002-087-4	2-FHS-016-125-4
2-CNH-006-321-4	2-DSR-008-121-4	2-ESS-002-088-4	2-FHS-020-110-4
2-CNH-006-322-4	2-DSR-008-122-4	2-ESS-003-004-4	2-HDL-002-206-4
2-CNH-006-323-4	2-DSR-016-001-4	2-ESS-003-015-4	2-HDL-002-207-4
2-CNH-010-029-4	2-DSR-016-014-4	2-ESS-004-038-4	2-HDL-002-216-4
2-CNH-012-033-4	2-DSR-016-020-4	2-ESS-004-154-4	2-HDL-002-217-4
2-CNH-012-034-4	2-DSR-016-021-4	2-ESS-004-155-4	2-HDL-002-226-4
2-CNH-012-035-4	2-DSR-024-022-4	2-ESS-004-156-4	2-HDL-002-227-4
2-CNH-018-047-4	2-DTH-002-005-4	2-ESS-004-157-4	2-HDL-004-208-4
2-CNH-018-048-4	2-DTH-002-006-4	2-ESS-004-158-4	2-HDL-004-209-4
2-CNH-018-049-4	2-DTH-002-007-4	2-ESS-006-251-4	2-HDL-004-218-4
2-CNH-018-050-4	2-DTH-002-016-4	2-ESS-008-060-4	2-HDL-004-219-4
2-CNH-018-051-4	2-DTH-002-073-4	2-ESS-012-005-4	2-HDL-004-228-4
2-CNH-018-052-4	2-DTH-002-074-4	2-ESS-012-007-4	2-HDL-004-229-4
2-CNH-018-053-4	2-DTH-002-075-4	2-ESS-012-009-4	2-HDL-008-203-4
2-CNH-018-054-4	2-DTH-002-076-4	2-ESS-012-095-4	2-HDL-008-213-4
2-CNH-018-055-4	2-DTH-025-173-4	2-ESS-012-096-4	2-HDL-008-223-4
2-DSH-002-034-4	2-DTH-025-174-4	2-ESS-012-097-4	2-HDL-014-201-4
2-DSH-002-036-4	2-DTH-025-175-4	2-ESS-014-024-4	2-HDL-014-211-4

APPENDIX C

ZONE: C

LINE NUMBER	LINE NUMBER	LINE NUMBER	LINE NUMBER
2-HDL-014-221-4			
2-HSS-002-097-4			
2-HSS-002-098-4			
2-HSS-002-141-4			
2-HSS-002-146-4			
2-HSS-002-160-4			
2-HSS-002-171-4			
2-HSS-002-237-4			
2-HSS-006-167-4			
2-HSS-010-189-4			
2-HSS-016-025-4			
2-HSS-028-002-4			
2-HSS-028-004-4			
2-HSS-150-251-4			
2-HSS-150-252-4			
2-HSS-150-253-4			
2-HSS-150-254-4			
2-SVH-002-704-4			
2-SVH-002-734-4			
2-SVH-002-764-4			
2-SVH-008-404-4			
2-SVH-008-434-4			
2-SVH-008-464-4			
2-SVH-008-504-4			
2-SVH-008-534-4			
2-SVH-008-564-4			
2-SVH-008-604-4			
2-SVH-008-634-4			
2-SVH-008-664-4			
2-SVH-008-805-4			
2-SVH-008-835-4			
2-SVH-008-865-4			
2-THE-002-074-4			
2-THE-003-057-4			
2-THE-004-413-4			
2-THE-004-414-4			
2-THE-006-041-4			
2-THE-006-101-4			
2-THE-008-075-4			
2-THE-008-084-4			
2-THE-008-085-4			
2-THE-012-076-4			
2-THE-012-418-4			

APPENDIX C

ZONE: D

LINE NUMBER	LINE NUMBER	LINE NUMBER	LINE NUMBER
2-ARC-012-009-4	2-CNI-030-024-4	2-FHS-008-141-4	2-HVG-006-001-4
2-ARC-025-015-4	2-CNI-030-025-4	2-FHS-020-110-4	2-HVG-006-002-4
2-ARC-025-016-4	2-CNI-030-042-4	2-FHS-024-006-4	2-HVG-006-003-4
2-ASS-003-502-4	2-CNI-030-174-4	2-FHS-024-007-4	2-HVG-006-004-4
2-ASS-004-091-4	2-CNI-030-236-4	2-FHS-024-009-4	2-HVG-006-005-4
2-ASS-004-092-4	2-DTH-002-014-4	2-FHS-024-010-4	2-HVG-006-006-4
2-ASS-150-010-4	2-DTH-002-015-4	2-FHS-024-012-4	2-HVG-025-150-4
2-ASS-150-069-4	2-DTH-002-016-4	2-FHS-024-013-4	2-HVG-025-151-4
2-CNA-003-303-4	2-DTH-002-026-4	2-FHS-024-027-4	2-HVG-025-152-4
2-CNA-003-304-4	2-DTH-002-029-4	2-FHS-024-028-4	2-HVG-025-153-4
2-CNA-004-652-4	2-DTH-002-030-4	2-HDH-014-603-4	2-HVG-025-154-4
2-CNA-004-653-4	2-DTH-002-061-4	2-HDH-014-613-4	2-HVG-025-155-4
2-CNA-006-002-4	2-DTH-002-062-4	2-HDH-014-623-4	2-HVG-025-156-4
2-CNA-006-052-4	2-DTH-002-063-4	2-HDL-008-202-4	2-HVG-025-157-4
2-CNA-150-006-4	2-DTH-003-027-4	2-HDL-008-203-4	2-HVG-150-038-4
2-CNA-150-019-4	2-DTH-003-060-4	2-HDL-008-205-4	2-HVG-150-121-4
2-CNA-150-021-4	2-DTH-025-175-4	2-HDL-008-212-4	2-HVG-150-122-4
2-CNI-002-069-4	2-DTH-025-176-4	2-HDL-008-213-4	2-HVG-150-123-4
2-CNI-002-237-4	2-DTH-150-064-4	2-HDL-008-215-4	2-HVH-002-034-4
2-CNI-002-276-4	2-DTH-150-065-4	2-HDL-008-222-4	2-HVH-002-035-4
2-CNI-003-173-4	2-DTH-150-135-4	2-HDL-008-223-4	2-HVH-004-025-4
2-CNI-003-200-4	2-DTH-150-139-4	2-HDL-008-225-4	2-HVH-004-026-4
2-CNI-004-071-4	2-DTH-150-140-4	2-HDL-008-302-4	2-HVH-004-036-4
2-CNI-004-203-4	2-DTH-150-185-4	2-HDL-008-304-4	2-HVH-006-006-4
2-CNI-010-029-4	2-DTH-150-186-4	2-HDL-008-312-4	2-HVH-006-007-4
2-CNI-012-033-4	2-DTH-150-214-4	2-HDL-008-314-4	2-HVH-006-008-4
2-CNI-016-019-4	2-DTH-150-473-4	2-HDL-008-322-4	2-HVH-006-009-4
2-CNI-020-039-4	2-DTH-150-479-4	2-HDL-008-324-4	2-HVH-006-012-4
2-CNI-020-040-4	2-DTH-150-480-4	2-HDL-016-503-4	2-HVH-006-013-4
2-CNI-020-041-4	2-DTH-150-513-4	2-HDL-016-513-4	2-HVH-006-014-4
2-CNI-024-012-4	2-DTH-150-514-4	2-HDL-016-523-4	2-HVH-006-015-4
2-CNI-024-013-4	2-FHP-002-002-4	2-HDL-018-402-4	2-HVH-006-023-4
2-CNI-024-032-4	2-FHP-002-003-4	2-HDL-018-422-4	2-HVH-006-024-4
2-CNI-024-074-4	2-FHP-002-004-4	2-HDL-018-442-4	2-HVH-006-027-4
2-CNI-024-075-4	2-FHP-003-001-4	2-HVG-002-012-4	2-HVH-006-028-4
2-CNI-024-084-4	2-FHR-010-001-4	2-HVG-002-013-4	2-HVH-006-037-4
2-CNI-024-085-4	2-FHR-010-002-4	2-HVG-003-015-4	2-HVH-006-038-4
2-CNI-024-086-4	2-FHR-010-003-4	2-HVG-003-016-4	2-HVH-006-039-4
2-CNI-024-211-4	2-FHS-006-089-4	2-HVG-003-017-4	2-HVH-006-062-4
2-CNI-025-317-4	2-FHS-006-090-4	2-HVG-003-018-4	2-HVH-006-066-4
2-CNI-030-017-4	2-FHS-006-091-4	2-HVG-003-019-4	2-HVH-008-010-4
2-CNI-030-018-4	2-FHS-006-092-4	2-HVG-003-020-4	2-HVH-008-011-4
2-CNI-030-020-4	2-FHS-006-138-4	2-HVG-003-021-4	2-HVH-008-016-4
2-CNI-030-022-4	2-FHS-006-139-4	2-HVG-003-022-4	2-HVH-008-017-4
2-CNI-030-023-4	2-FHS-008-140-4	2-HVG-004-014-4	2-HVH-008-019-4

APPENDIX C

ZONE: D

LINE NUMBER	LINE NUMBER	LINE NUMBER	LINE NUMBER
2-HVH-008-020-4			
2-HVH-008-021-4			
2-HVH-008-022-4			
2-HVH-008-081-4			
2-HVH-008-082-4			
2-HVH-008-087-4			
2-HVH-008-088-4			
2-HVH-008-089-4			
2-HVH-150-018-4			
2-OFG-002-206-4			
2-OFG-003-186-4			
2-SVH-002-302-4			
2-SVH-002-332-4			
2-SVH-002-362-4			
2-SVH-002-402-4			
2-SVH-002-407-4			
2-SVH-002-432-4			
2-SVH-002-437-4			
2-SVH-002-462-4			
2-SVH-002-467-4			
2-SVH-002-501-4			
2-SVH-002-502-4			
2-SVH-002-531-4			
2-SVH-002-532-4			
2-SVH-002-561-4			
2-SVH-002-562-4			
2-SVH-002-602-4			
2-SVH-002-632-4			
2-SVH-002-662-4			
2-SVH-002-991-4			
2-SVH-003-307-4			
2-SVH-003-337-4			
2-SVH-003-367-4			
2-SVH-004-992-4			
2-SVH-004-993-4			
2-SVH-004-994-4			
2-THE-008-075-4			
2-THE-008-084-4			
2-THE-008-085-4			
2-THE-012-076-4			
2-THE-012-077-4			
2-THE-012-418-4			

APPENDIX C

ZONE: E

LINE NUMBER	LINE NUMBER	LINE NUMBER	LINE NUMBER
2-HVG-006-147-4			

ZONE: F

LINE NUMBER	LINE NUMBER	LINE NUMBER	LINE NUMBER
2-CNA-003-414-4	2-HDL-004-308-4		
2-CNI-002-226-4	2-HDL-004-410-4		
2-CNI-012-065-4	2-HDL-004-507-4		
2-CNI-012-324-4	2-HDL-006-210-4		
2-CNI-018-044-4	2-HDL-006-407-4		
2-CNI-018-047-4	2-HDL-006-412-4		
2-CNI-018-053-4	2-HDL-008-202-4		
2-CNI-018-056-4	2-HDL-008-205-4		
2-CNI-018-059-4	2-HDL-008-301-4		
2-CNI-018-076-4	2-HDL-008-302-4		
2-CNI-018-327-4	2-HDL-008-304-4		
2-CNI-020-062-4	2-HDL-008-411-4		
2-CNI-020-079-4	2-HDL-008-414-4		
2-CNI-024-043-4	2-HDL-012-404-4		
2-CNI-024-084-4	2-HDL-012-405-4		
2-CNI-030-042-4	2-HDL-012-501-4		
2-DSH-010-044-4	2-HDL-012-502-4		
2-DSH-010-046-4	2-HDL-014-401-4		
2-DSR-008-104-4	2-HDL-016-503-4		
2-DSR-010-028-4	2-HDL-018-402-4		
2-DSR-010-030-4	2-SVH-002-301-4		
2-DSR-012-112-4	2-SVH-002-302-4		
2-DSR-012-118-4	2-SVH-002-305-4		
2-ESS-012-005-4	2-SVH-002-401-4		
2-ESS-014-024-4	2-SVH-002-402-4		
2-ESS-016-016-4	2-SVH-002-405-4		
2-ESS-026-034-4	2-SVH-002-407-4		
2-FHS-006-091-4	2-SVH-002-501-4		
2-FHS-020-008-4	2-SVH-002-502-4		
2-FHS-020-038-4	2-SVH-002-505-4		
2-FHS-024-007-4	2-SVH-002-602-4		
2-FHS-024-019-4	2-SVH-002-605-4		
2-HDH-002-605-4	2-SVH-002-704-4		
2-HDH-002-606-4	2-SVH-002-804-4		
2-HDH-004-607-4	2-SVH-003-307-4		
2-HDH-012-601-4	2-SVH-008-404-4		
2-HDH-014-603-4	2-SVH-008-504-4		
2-HDL-002-306-4	2-SVH-008-604-4		
2-HDL-002-307-4	2-SVH-008-805-4		
2-HDL-002-406-4	2-SVH-025-306-4		
2-HDL-002-408-4	2-SVH-150-406-4		
2-HDL-002-409-4	2-SVH-150-506-4		
2-HDL-002-413-4	2-SVH-150-606-4		
2-HDL-002-505-4			
2-HDL-002-506-4			

APPENDIX C

ZONE: G

LINE NUMBER	LINE NUMBER	LINE NUMBER	LINE NUMBER
2-CNA-003-318-4	2-FHS-006-092-4	2-SVH-002-431-4	
2-CNI-002-227-4	2-FHS-016-100-4	2-SVH-002-432-4	
2-CNI-004-313-4	2-FHS-018-018-4	2-SVH-002-435-4	
2-CNI-006-136-4	2-FHS-020-011-4	2-SVH-002-437-4	
2-CNI-006-239-4	2-FHS-020-039-4	2-SVH-002-531-4	
2-CNI-012-066-4	2-FHS-024-010-4	2-SVH-002-532-4	
2-CNI-012-325-4	2-FHS-024-019-4	2-SVH-002-535-4	
2-CNI-018-045-4	2-FHS-024-020-4	2-SVH-002-632-4	
2-CNI-018-048-4	2-FHS-024-029-4	2-SVH-002-635-4	
2-CNI-018-054-4	2-HDH-002-615-4	2-SVH-002-734-4	
2-CNI-018-057-4	2-HDH-002-616-4	2-SVH-002-834-4	
2-CNI-018-060-4	2-HDH-004-617-4	2-SVH-003-337-4	
2-CNI-018-077-4	2-HDH-012-611-4	2-SVH-008-434-4	
2-CNI-018-078-4	2-HDH-014-613-4	2-SVH-008-534-4	
2-CNI-018-091-4	2-HDL-002-316-4	2-SVH-008-634-4	
2-CNI-018-238-4	2-HDL-002-317-4	2-SVH-008-835-4	
2-CNI-018-328-4	2-HDL-002-426-4	2-SVH-025-336-4	
2-CNI-020-062-4	2-HDL-002-428-4	2-SVH-150-436-4	
2-CNI-020-063-4	2-HDL-002-429-4	2-SVH-150-536-4	
2-CNI-020-080-4	2-HDL-002-433-4	2-SVH-150-636-4	
2-CNI-024-043-4	2-HDL-002-515-4	2-THE-012-076-4	
2-CNI-024-084-4	2-HDL-002-516-4		
2-CNI-024-085-4	2-HDL-004-318-4		
2-CNI-030-219-4	2-HDL-004-430-4		
2-CNI-030-225-4	2-HDL-004-517-4		
2-DSH-010-003-4	2-HDL-006-220-4		
2-DSH-010-021-4	2-HDL-006-427-4		
2-DSH-010-044-4	2-HDL-006-432-4		
2-DSH-010-046-4	2-HDL-008-212-4		
2-DSH-012-043-4	2-HDL-008-215-4		
2-DSR-008-103-4	2-HDL-008-311-4		
2-DSR-010-003-4	2-HDL-008-312-4		
2-DSR-010-016-4	2-HDL-008-314-4		
2-DSR-010-028-4	2-HDL-008-431-4		
2-DSR-010-030-4	2-HDL-008-434-4		
2-DSR-012-027-4	2-HDL-012-424-4		
2-DSR-012-029-4	2-HDL-012-425-4		
2-DSR-012-110-4	2-HDL-012-511-4		
2-DSR-012-113-4	2-HDL-012-512-4		
2-DSR-012-118-4	2-HDL-014-421-4		
2-ESS-012-007-4	2-HDL-016-513-4		
2-ESS-014-027-4	2-HDL-018-422-4		
2-ESS-016-019-4	2-SVH-002-331-4		
2-ESS-026-039-4	2-SVH-002-332-4		
2-FHS-004-128-4	2-SVH-002-335-4		

APPENDIX C

ZONE: H

LINE NUMBER	LINE NUMBER	LINE NUMBER	LINE NUMBER
2-ASS-003-502-4	2-HDH-004-627-4	2-SVH-002-864-4	
2-CHA-003-415-4	2-HDH-012-621-4	2-SVH-003-367-4	
2-CNI-002-228-4	2-HDH-014-623-4	2-SVH-008-464-4	
2-CNI-012-067-4	2-HDL-002-326-4	2-SVH-008-564-4	
2-CNI-012-326-4	2-HDL-002-327-4	2-SVH-008-664-4	
2-CNI-018-046-4	2-HDL-002-446-4	2-SVH-008-865-4	
2-CNI-018-049-4	2-HDL-002-448-4	2-SVH-025-366-4	
2-CNI-018-055-4	2-HDL-002-449-4	2-SVH-150-466-4	
2-CNI-018-058-4	2-HDL-002-453-4	2-SVH-150-566-4	
2-CNI-018-061-4	2-HDL-002-525-4	2-SVH-150-666-4	
2-CNI-018-078-4	2-HDL-002-526-4		
2-CNI-018-329-4	2-HDL-004-328-4		
2-CNI-020-064-4	2-HDL-004-450-4		
2-CNI-020-081-4	2-HDL-004-527-4		
2-CNI-024-043-4	2-HDL-006-230-4		
2-CNI-024-086-4	2-HDL-006-447-4		
2-CNI-030-219-4	2-HDL-006-452-4		
2-CNI-030-225-4	2-HDL-008-032-4		
2-CNI-036-222-4	2-HDL-008-222-4		
2-DSH-010-005-4	2-HDL-008-225-4		
2-DSH-010-021-4	2-HDL-008-321-4		
2-DSH-010-023-4	2-HDL-008-322-4		
2-DSH-010-046-4	2-HDL-008-324-4		
2-DSH-012-045-4	2-HDL-008-451-4		
2-DSH-016-001-4	2-HDL-008-454-4		
2-DSH-016-019-4	2-HDL-012-444-4		
2-DSR-010-005-4	2-HDL-012-445-4		
2-DSR-010-018-4	2-HDL-012-521-4		
2-DSR-012-027-4	2-HDL-012-522-4		
2-DSR-012-029-4	2-HDL-014-441-4		
2-DSR-012-114-4	2-HDL-016-523-4		
2-DSR-012-118-4	2-HDL-018-442-4		
2-DSR-016-001-4	2-SVH-002-361-4		
2-DSR-016-014-4	2-SVH-002-362-4		
2-ESS-012-009-4	2-SVH-002-365-4		
2-ESS-014-030-4	2-SVH-002-461-4		
2-ESS-016-021-4	2-SVH-002-462-4		
2-ESS-026-042-4	2-SVH-002-465-4		
2-FHS-020-040-4	2-SVH-002-467-4		
2-FHS-020-041-4	2-SVH-002-561-4		
2-FHS-024-013-4	2-SVH-002-562-4		
2-FHS-024-019-4	2-SVH-002-565-4		
2-FHS-024-029-4	2-SVH-002-662-4		
2-HDH-002-625-4	2-SVH-002-665-4		
2-HDH-002-626-4	2-SVH-002-764-4		

APPENDIX C

ZONE: J

LINE NUMBER	LINE NUMBER	LINE NUMBER	LINE NUMBER
2-CNA-006-002-4			
2-CNA-006-052-4			
2-CNA-150-006-4			
2-DSH-010-023-4			
2-THE-008-419-4			
2-THE-010-038-4			
2-THE-012-418-4			

APPENDIX C

ZONE: L

LINE NUMBER	LINE NUMBER	LINE NUMBER	LINE NUMBER
2-CND-002-076-4			
2-CND-002-077-4			
2-CND-002-081-4			
2-CNI-030-017-4			
2-CNI-030-018-4			

APPENDIX C

ZONE: N

LINE NUMBER	LINE NUMBER	LINE NUMBER	LINE NUMBER
2-ARC-006-099-4			
2-ARC-008-010-4			
2-ARC-008-012-4			
2-ARC-010-607-4			
2-ARC-012-009-4			
2-ARC-012-605-4			
2-ARC-025-015-4			
2-ASS-002-103-4			
2-ASS-002-132-4			
2-ASS-002-151-4			
2-ASS-004-023-4			
2-ASS-004-092-4			
2-ASS-006-025-4			
2-ASS-025-058-4			
2-CHI-030-018-4			
2-CHI-030-022-4			
2-CHI-030-174-4			
2-DTH-125-145-4			
2-DTH-150-146-4			

APPENDIX C

ZONE: P

LINE NUMBER	LINE NUMBER	LINE NUMBER	LINE NUMBER
2-ARC-006-098-4			
2-ARC-008-008-4			
2-ARC-008-011-4			
2-ARC-010-607-4			
2-ARC-010-608-4			
2-ARC-012-009-4			
2-ARC-025-016-4			
2-ASS-003-502-4			
2-ASS-004-024-4			
2-ASS-004-403-4			
2-ASS-006-018-4			
2-ASS-006-025-4			
2-ASS-006-027-4			
2-ASS-006-126-4			
2-ASS-006-128-4			
2-ASS-008-019-4			
2-ASS-008-142-4			
2-ASS-010-520-4			
2-ASS-025-022-4			
2-ASS-025-057-4			
2-ASS-150-107-4			
2-ASS-150-507-4			
2-CWI-030-020-4			
2-CWI-030-022-4			
2-DTH-125-143-4			
2-DTH-125-145-4			
2-DTH-150-135-4			
2-DTH-150-144-4			
2-DTH-150-146-4			
2-DTH-150-473-4			

APPENDIX C

ZONE: R

LINE NUMBER	LINE NUMBER	LINE NUMBER	LINE NUMBER
2-THE-006-041-4			
2-THE-008-084-4			
2-THE-008-085-4			

APPENDIX C

ZONE: S

LINE NUMBER	LINE NUMBER	LINE NUMBER	LINE NUMBER
2-THE-012-077-4			

APPENDIX C

ZONE: H

LINE NUMBER	LINE NUMBER	LINE NUMBER	LINE NUMBER
2-ASS-006-038-4			
2-ASS-006-400-4			
2-ASS-006-505-4			
2-ASS-006-506-4			
2-ASS-150-110-4			
2-ASS-150-111-4			
2-ASS-150-515-4			
2-ASS-150-516-4			
2-CNA-002-023-4			
2-CNA-002-025-4			
2-CNA-002-026-4			
2-CNA-002-028-4			
2-CNA-002-604-4			
2-CNA-002-607-4			
2-CNA-002-608-4			
2-CNA-002-611-4			
2-CNA-003-303-4			
2-CNA-003-304-4			
2-CNA-004-024-4			
2-CNA-004-048-4			
2-CNA-004-652-4			
2-CNA-004-653-4			
2-CNA-150-019-4			
2-CNA-150-021-4			
2-DTH-150-139-4			
2-DTH-150-140-4			
2-DTH-150-479-4			
2-DTH-150-480-4			
2-HVH-006-006-4			
2-HVH-006-007-4			
2-HVH-006-008-4			
2-HVH-006-009-4			

ZONE: X

LINE NUMBER	LINE NUMBER	LINE NUMBER	LINE NUMBER
2-CND-002-075-4			
2-CND-002-076-4			
2-CND-002-077-4			
2-CNI-020-039-4			
2-CNI-020-040-4			
2-CNI-020-041-4			
2-CNI-030-042-4			

APPENDIX C

ZONE: Z

LINE NUMBER	LINE NUMBER	LINE NUMBER	LINE NUMBER
2-AAS-004-102-4			
2-HVH-004-025-4			
2-HVH-004-026-4			
2-IAS-006-102-4			
2-IAS-006-202-4			
2-IAS-006-302-4			

APPENDIX D

DETAILED ANALYSIS

APPENDIX D

HIGH ENERGY LINE BREAK ANALYSIS

ZONES
PC240-604
PC240-606
PC250-618
PC250-622
PC250-624
PC261-207
PC261-637
PC261-643
PC261-646
PC261-651
PC287-617
PC287-669
PC287-674

Building: Reactor Building
Elevation: 240'-0"
250'-0"
261'-0"
287'-0"

HELB System

E22 CSH (27-4) — High Pressure Core Spray System

E21 CSL (27-5) — Low Pressure Core Spray System

FWS (6-1) — Feedwater System

E51 ICS (27-6) — Reactor Core Isolation and Cooling System

MSS (3-1) — Main Steam

B35 RCS (25-1) — Reactor Recirculation System

E12 RHS (27-7) — Residual Heat Removal System

C41 SLS (27-16) — Standby Liquid Control System

Control System

B35 RCS (25-1) — Reactor Recirculation System

G33/G36 WCS (26-3) Reactor Water Cleanup (RWCU)

1. Following is a list of high-energy lines analyzed on a system basis.

   a. High Pressure Core Spray System (CSH, 27-4)

      Line: All high-energy lines for high pressure core spray system inside primary containment

      Function:

      High pressure core spray injection lines to reactor vessel.

      Failure Effect:

      Loss of coolant inside primary containment.

   b. Low Pressure Core Spray System (CSL, 27-5)

      Line: All high-energy lines for low pressure core spray system inside primary containment

      Function:

      Low pressure core spray injection lines to reactor vessel.

      Failure Effect:

      Loss of coolant inside primary containment.

   c. Feedwater System (FWS, 6-1)

      Line No.: All feedwater lines inside primary containment

      Function:

      Feedwater lines to reactor vessel.

      Failure Effect:

      Total loss of feedwater flow.

   d. Reactor Core Isolation and Cooling System (ICS, 27-6)

      Line: Main steam supply line to ICS turbine

      Function:

      Steam supply to ICS turbine.

Failure Effect:

Loss of coolant.

e. Main Steam (MSS, 3-1)

Line: All main steam lines inside primary containment

Function:

Main steam supply header lines from reactor vessel and main steam drain lines to main condenser.

Failure Effect:

Loss of main steam.

f. Reactor Recirculation System (RCS, 25-1)

Lines: All reactor recirculation system high energy lines inside containment

Function:

Reactor coolant recirculation lines.

Failure Effect:

Loss of reactor coolant inside primary containment.

g. Residual Heat Removal System (RHS, 27-7)

Lines: Residual heat removal system high-energy lines inside the containment

Function:

RHR system high-energy lines to reactor vessel and reactor recirculation system.

Failure Effect:

Loss of reactor coolant inside primary containment.

h. Standby Liquid Control System (SLS, 27-16)

Lines: All standby liquid control system high-energy lines inside primary containment

Function:

Standby liquid control system injection lines to reactor vessel.

Failure Effect:

Loss of coolant inside primary containment.

i. Reactor Water Cleanup System (WCS, 26-3)

Lines: All reactor water cleanup system high-energy lines inside containment

Function:

Reactor water cleanup recirculation suction lines.

Failure Effect:

Loss of reactor coolant inside primary containment.

2. The following is the list nonsafety-related control components that are affected by a high-energy line break on any of the lines listed in Item 1. The consequence of failure of each control component is analyzed. Refer to Appendix B for function of individual components.

a. Reactor Coolant Recirculation (RCS, 25-1)

1) 2RCS*AOV45A (B35-F079A), 2RCS*AOV45B (B35-F079B)

Failure Effect:

Failure of these valves would result in loss of recirculation pump seal staging control. The worst case failure would be closure of these valves resulting in loss of seal staging flow. There is no short-term effect on reactor parameters.

2) 2RCS-TE12A (B35-N028A), 2RCS-TE12B (B35-N028B)

Failure Effect:

These instruments provide a signal indicative of recirculation pump suction temperature. Failure of these devices could result in recirculation pump trip and transfer to LFMG.

3) 2RCS-TE21A (B35-C001A-A1), 2RCS-TE21B (B35-C001B-A2),
2RCS-TE22A (B35-C001A-B1), 2RCS-TE22B (B35-C001B-B2),
2RCS-TE23A (B35-C001A-C1), 2RCS-TE23B (B35-C001B-C2),
2RCS-TE24A (B35-C001A-D1), 2RCS-TE24B (B35-C001B-D2),
2RCS-TE25A (B35-C001A-E1), 2RCS-TE25B (B35-C001B-E2),
2RCS-TE26A (B35-C001A-F1), 2RCS-TE26B (B35-C001B-F2),
2RCS-TE27A (B35-C001A-G1), 2RCS-TE27B (B35-C001B-G2),
2RCS-LS32A (B35-C001A-LSH), 2RCS-LS32B (B35-C001B-LSH),
2RCS-LS33A (B35-C001A-LSL), 2RCS-LS33B (B35-C001B-LSL),
2RCS-NBS20A (B35-C001A-VBSH), 2RCS-NBS20B (B35-C001B-VBSH)

Failure Effect:

These devices are related to and located on the recirculation pump motor. The worst case effect of any combination of failures would be a possible recirculation pump trip and transfer to LFMG.

3. Combined Effects

a. A break in high pressure core spray high-energy line in this zone causes a steam and coolant release inside the primary containment, an event bounded by FSAR Section 15.6.5 analyses. Failure of the control components in this zone does not exacerbate this event.

b. A break in the low pressure core spray high energy line in this zone causes a steam and coolant release inside the primary containment, an event bounded by FSAR Section 15.6.5 analyses. Failure of the control components in this zone does not exacerbate this event.

c. A break in feedwater high-energy line in this zone causes loss of feedwater to reactor inside primary containment an event bounded by FSAR Section 15.6.5 analyses. Failure of the control components in this zone does not exacerbate this event.

d. A break in reactor core isolation and cooling high-energy line in this zone causes release of main steam and loss of ICS turbine inside primary containment, an event bounded by FSAR Section 15.6.5 analyses. Failure of the control components in this zone does not exacerbate this event.

e. A break in main steam high-energy line in this zone causes loss of main steam inside primary containment, an event bounded by FSAR Section 15.6.5 analyses. Failure of the control components in this zone does not exacerbate this event.

f. A break in reactor recirculation high-energy line in this zone causes loss of reactor coolant inside primary containment, an event bounded by FSAR Section 15.6.5 analyses. Failure of the control components in this zone does not exacerbate this event.

g. A break in residual heat removal high-energy line in this zone causes a loss of reactor coolant inside primary containment, an event bounded by FSAR Section 15.6.5 analyses. Failure of control components in this zone does not exacerbate this event.

h. A break in standby liquid control high energy line in this zone causes loss of reactor coolant inside primary containment, an event bounded by FSAR Section 15.6.5 analyses. Failure of control components in this zone does not exacerbate this event.

i. A break in reactor water cleanup high-energy line in this zone causes loss of reactor coolant inside primary containment, an event bounded by FSAR Section 15.6.5 analyses. Failure of control components does not exacerbate this event.

APPENDIX D

HIGH ENERGY LINE BREAK (HELB) ANALYSIS

ZONE MAIN STEAM TUNNEL

Building: Steam Tunnel
Elevation: 261'-0"

HELB System		Control System	
MSS (3-1))	Main Steam	MSS (3-1)	Main Steam
FWS (6-1)	Feedwater		

1. The following is a list of high energy lines analyzed on a system basis:

   a. Main Steam (MSS, 3-1)

      1) Line Nos. 2MSS-006-117-4, -006-12-4, -006-21-4, -006-18-4, -002-19-4, -002-173-4, -002-181-4, -002-22-4, -002-176-4, -002-180-4, -002-13-4, -002-179-4, -002-178-4, -002-16-4, -002-182-4, -002-177-4, -002-183-4, -002-184-4, -002-187-4, -002-188-4

         Function

         Low point main steam line drains to the main condenser.

         Failure Effect

         Loss of condenser vacuum.

      2) Line Nos. 2MSS-002-097-4, -002-098-4

         Function

         Main steam header drain to the main condenser.

         Failure Effect

         Loss of condenser vacuum.

      3) Line Nos. 2MSS-026-151-1, 2MSS-026-152-1, 2MSS-026-153-1, 2MSS-026-154-1, 2MSS-028-3-4, 2MSS-028-1-4, 2MSS-028-7-4, 2MSS-028-5-4

Function

Main steam lines to the main steam header.

Failure Effect

Loss of main steam.

b. Feedwater (FWS, 6-1)

Line Nos. 2FWS-024-027-4, 2FWS-024-028-4, 2FWS-024-050-1, 2FWS-024-051-1

Function

Feedwater header discharge lines.

Failure Effect

Total loss of feedwater.

2. The following is the list of nonsafety-related control components that are affected by a high-energy line break on any of the lines listed in Item 1. The consequence of failure of each control component is analyzed. Refer to Appendix B for the function of individual components.

Additionally, a high energy line break in this zone will also result in failure of control components in Zones A, B, and C. The significant consequences of such a failure have been integrated into the analysis by referring to the appropriate "Failure Effect" from the above-listed zone(s) in the "Combined Effect" section of this zone.

a. Main Steam (MSS, 3-1)

1) 2MSS-AOV85A, 2MSS-SOV85A, 2MSS-AOV85B, 2MSS-SOV85B, 2MSS-AOV85C, 2MSS-SOV85C, 2MSS-AOV85D, 2MSS-SOV85D, 2MSS-AOV87A, 2MSS-SOV87A, 2MSS-AOV87B, 2MSS-SOV87B, 2MSS-AOV87C, 2MSS-SOV87C, 2MSS-AOV87D, 2MSS-SOV87D

Failure Effect

If the above valves fail in open position, this may cause an uncontrolled admission of high pressure and high temperature steam to the main condenser which may ultimately result in a loss of condenser vacuum.

2) 2MSS-SOV210

Failure Effect

Failure of the above valve in any position has no significant effect.

b. Feedwater (FWS, 6-1)

2FWS-SOV23A, 2FWS-SOV23B

Failure Effect

Failure of the above solenoid valve will not pose any threat to the feedwater flow.

3. Combined Effect

a. 1) A break in any of the main steam high energy lines [Item 1.a.1) or 1.a.2)] will result in a loss of main condenser vacuum. Loss of condenser vacuum event is bounded by FSAR Section 15.2.5 analyses. Failure of any control component in this zone or Zones A, B, or C does not exacerbate the event.

2) A break in any of the main steam lines [Item 1.a.3)] will result in a loss of main steam. Loss of main steam event is bounded by FSAR Section 15.6.4 analyses. Failure of any control component in this zone or Zones A, B, or C does not exacerbate this event.

b. A break in any of the feedwater high energy lines in this zone will result in a loss of feedwater. Loss of feedwater event is bounded by FSAR Section 15.6.6 analyses.

The failure of control component [Item 2.a.1)] in this zone may result in a loss of condenser vacuum, an event bounded by FSAR Section 15.2.5 analyses. Failure of components in the Zones A, B, or C does not exacerbate this event.

APPENDIX D

HIGH ENERGY LINE BREAK (HELB) ANALYSIS

Zones: ABN17503
SC175102
SC215122
SC261145
SC289155
SC289182
SC328193

Building: Reactor Building
Elevation: 175 ft
215 ft
261 ft
289 ft
328 ft

HELB System		Control System	
ICS (27-6)	Reactor Core Isolation Cooling (RCIC)	CCP (9-1)	Reactor Plant Component Cooling Water
WCS (26-3)	Reactor Water Cleanup (RWCU)	CNS (4-3)	Condensate Makeup/ Drawoff
C12 RDS (36-1)	Control Rod Drive Hydraulic System	IAS (12-1)	Instrument Air
		C12 RDS (36-1)	Control Rod Drive Hydraulic (CRD)
		C33 ISC (FWC)	Feedwater Control System
		B35 RCS (25-1)	Reactor Recirculation System

1. The following is a list of HELBs analyzed on a system basis:

   a. Reactor Core Isolation Cooling (ICS, 27-6)

      1) Line No. 2ICS-004-36-2

         Function

         Steam supply to reactor core isolation cooling pump turbine.

Failure Effect

Loss of reactor core isolation cooling pump.

2) Line No. 2ICS-010-62-2

Function

Main steam supply to reactor core isolation cooling system

Failure Effect

Loss of reactor core isolation cooling and residual heat removal (steam condensing mode)

b. Reactor Water Cleanup (WCS, 26-3)

Line No. 2WCS-010-316-3, 2WCS-008-88-3

Function

Reactor water cleanup supply line from recirculation system and return line to feedwater system.

Failure Effect

Loss of reactor water cleanup system

c. Control Rod Drive Hydraulic System (RDS, 36-1)

All CRD lines located in zones SC261-145 and SC289-155.

Function

Supplies hydraulic drive water and cooling water to the control rod drive system.

Failure Effect

Loss of control rod drive system cooling and loss of hydraulic control unit supply to accumulators.

2. The following is the list of nonsafety-related control components that are affected by a HELB on any of the lines listed in Item 1. The consequence of failure of each control component is analyzed. Refer to Appendix B for the function of individual components.

a. Reactor Plant Component Cooling Water (CCP, 9-1)

1) 2CCP-PS45A, 2CCP-PS45B, 2CCP-PS45C, 2CCP-PS47A, 2CCP-PS47B, 2CCP-PS47C

Failure Effect

Failure of any or all of the above devices will result in tripping the reactor building component cooling water booster pump and consequent loss of the CCP system.

2) 2CCP-PS67A, 2CCP-PS67B, 2CCP-PS67C

Failure Effect

Failure of any one or all of the above pressure switches will trip the component cooling water pumps. This will result in losing the total RBCLCW system.

3) 2CCP-PS96A, 2CCP-PS96B, 2CCP-PS96C

Failure Effect

Failure of any or all of these instruments will not allow the automatic startup of the selected standby component cooling water pump. However, two pumps are always running, and a complete loss of component cooling will not occur.

4) 2CCP-I/P108, 2CCP-TV108

Failure Effect

Failure of a single or the group of instruments listed above may cause the bypass valve portion of 2CCP-TV-108 to open and the control valve portion of 2CCP-TV-108 to close. This will allow the component cooling water to bypass the heat exchangers, thereby raising the CCP water temperature and may have a long-term effect on the reactor plant components.

5) 2CCP-LS120, 2CCP-SOV120, 2CCP-AOV120

Failure Effect

Failure of any or all of the above instruments will prevent replenishing water to expansion tank 2CCP-TK1. This will have a significant effect to the operation of RBCLCW system.

b. Condensate Makeup/Drawoff (CNS, 4-3)

2CNS-PCV132

Failure Effect

Failure of the above pressure control valve will fail to maintain condensate water pressure of 100 psig to spent fuel pool cooling and cleanup, radioactive liquid waste, and high pressure decontamination systems.

c. Instrument Air (IAS, 12-1)

2IAS-PS178, 2IAS-PS180, 2IAS-PS183, 2IAS-PS185

Failure Effect

Failure of the above pressure switches will fail the ADS compressor C2 from automatic starting causing loss of air supply to recharge ADS accumulator tanks.

d. Control Rod Drive (RDS, 36-1)

1) 2RDS-PS2A (C12-N001A), 2RDS-PS2B (C12-N001B), 2RDS-PS14A (C12-N018A), 2RDS-PS14B (C12-N018B), 2RDS-FE107 (C12-N003)

Failure Effect

Failure of the above pressure switches would cause the CRD drive water pumps to trip, leading to an increase in CRD temperature and potential rod block.

2) 2RDS-A/M6A (C12-D009A), 2RDS-A/M6B (C12-D009B)

Failure Effect

These devices provide CRD cooling water flow control. Potential effects of failure include loss of instrument air pressure and closure of valves 2RDS-FV6A (C12-F002A), 2RDS-FV6B (C12-F002B) leading to an increase in CRD temperature and potential rod block.

3) 2RDS-FV6A (C12-F002A), 2RDS-FV6B (C12-F002B)

Failure Effect

Failure of these valves to the closed position would result in loss of instrument air and loss of cooling water flow leading to an increase in CRD temperature and potential rod block. Failure of these valves such that they remain open is of no consequence.

4) 2RDS-PCV101 (C12-F003), 2RDS-SOVX7A and 2RDS-SOVY7A (C12-F007A), 2RDS-SOVX7B and 2RDS-SOVY7B (C12-F007B), 2RDS-I/P107 (C12-K001), 2RDS-PDIS106 (C12-N002), 2RDS-FT107 (C12-N004), 2RDS-PT108 (C12-N005), 2RDS-FT112 (C12-N007), 2RDS-FT115 (C12-N009)

Failure Effect

The worst case failure of any combination of these devices would result in loss of cooling water flow leading to an increase in CRD temperature and potential rod block.

5) 2RDS-LS125 (C12-N013E), 2RDS-LS127 (C12-N013G)

Failure Effect

Failure of these transmitters would result in loss of rod block capability or an actual rod block.

6) 2RDS-PT139 (C12-N052)

Failure Effect

Failure of this device would result in a loss of the scram valve pilot air header pressure signal. The worst case would be a reactor scram.

7) Transponder, Branch Junction Module (RDS)

Failure Effect

Loss of manual control of rods. Scram still available.

e. Feedwater Control System (ISC, C33)

1) 2ISC*PT108 (C33-N005)

Failure Effect

Recirculation pump thermal shock interlock. Worse case failure would result in transfer to low frequency MG set.

2) 2ISC*PDT14A (C33-N004A), 2ISC*PDT14B (C33-N004B)

Failure Effect

Reactor vessel level. Loss of signal would result in increased feedwater flow. Potential scram on high water level.

3) 2ISC*PT109 (C33-N008)

Failure Effect

Reactor pressure. Used for cavitation interlock. Worse case failure would result in transfer to low speed.

f. Reactor Recirculation System (RCS, B35)

1) 2ISC*PT115 (B35-N040)

Failure Effect

Recirculation pump thermal shock interlock. Worse case failure would result in transfer to low frequency MG set.

2) 2RCS*PT84B (B35-N050B)

Failure Effect

High drywell pressure. Worse case failure would inhibit motion of recirculation flow control valve. No effect at full power.

3. Combined Effect

a. A break in any of the reactor core isolation cooling (RCIC) high energy lines in this zone will result in a loss of steam to reactor core isolation cooling turbine. This pipe break will result in closure of containment isolation valves for the ICS turbine steam supply due to high area ambient temperatures. This will cause loss of RCIC pump trip bounded by FSAR Section 15.3.1 analyses.

Failure of CCP system (RBCLCW) control components has no significant effect since this system is not required to operate during emergency or faulted plant condition. However, during this condition, a portion of the system provides a Cat I pressure boundary for backup cooling from the service water system to cool the SFC heat exchangers, RHR pump seal coolers, and recirculation pump seal coolers.

Failure of the condensate makeup/drawoff control component (2CNS-PCV132) to maintain condensate water pressure of 100 psig to spent fuel pool cooling and cleanup, radioactive liquid waste, and high pressure decontamination has no significant effect.

Failure of the instrument air system control components will cause loss of air supply to recharge ADS accumulator tanks. Since these tanks are isolated and contain sufficient volume to operate the ADS system when required, no significant effect will result.

Failure of the control rod drive system control components will lead to the following:

1) Loss of instrument air pressure (no significant effect)

2) A reactor scram

3) Loss of rod block capabilities

4) A rod block.

5) Loss of manual control of rods.

Item 2), 3), 4), and 5) are events bounded by FSAR Section 15.4 analyses.

Failure of feedwater control system control components will result in feedwater controller failure in maximum demand. Increased feedwater flow to reactor will result in reactor high water level scram. This event is bounded by FSAR 15.1.2.

Failure of recirculation system control components will result in transfer of recirculation pump to low speed. This event is less severe than described in FSAR Section 15.3.

b. A break in the reactor water cleanup high energy line in this zone will cause loss of reactor water cleanup return line to feedwater system. This event is bounded by FSAR Section 15.6.6. Failure of control components in this zone is described in Item 3.a.

c. A break in any control rod drive system high energy line in this zone will result in a loss of control rod drive hydraulic fluid pressure. This event is bounded by FSAR Section 15.4 analyses. Failure of control components in this zone is described in Item 3.a.

APPENDIX D

HIGH ENERGY LINE BREAK ANALYSIS

Zone AA

Building: Turbine Bldg.
Elevation: 277'-6"
250'-0"
239'-0"

HELB System		Control System	
ARC (5-1)	Condenser Air Removal	ARC (5-1)	Condenser Air Removal
ASS (3-9)	Auxiliary Steam	ASS (3-9)	Auxiliary Steam
OFG (31-4)	Off-Gas	OFG (31-4)	Off-Gas

1. The following is a list of high energy lines analyzed on a system basis:

   a. Condenser Air Removal (ARC, 5-1)

      Line No. 2ARC-012-009-4

      Function

      Condenser air removal air ejector discharge to off-gas system

      Failure Effect

      Loss of main condenser off-gas treatment

   b. Auxiliary Steam (ASS, 3-9)

      1) Line Nos. 2ASS-002-132-4, 2ASS-002-133-4, 2ASS-150-010-4, and 2ASS-150-039-4

         Function

         Auxiliary steam supply piping to off-gas system preheaters 2OFG-E1A and E1B and supply piping safety valve

         Failure Effect

         Loss of auxiliary steam supply to off-gas system resulting in loss of off-gas treatment capability

      2) Line No. 2ASS-003-502-4

Function

Off-gas system auxiliary steam supply piping safety valve discharge to main condenser

Failure Effect

Loss of main condenser vacuum

c. Off-Gas (OFG, 31-4)

1) Line Nos. 20FG-003-006-4, 20FG-003-012-4, 20FG-003-013-4, 20FG-003-026-4, 20FG-003-027-4, 20FG-003-033-4, 20FG-003-035-4, 20FG-003-044-4, 20FG-003-063-4, 20FG-003-197-4, 20FG-012-187-4

Function

Off-gas condenser discharge to off-gas dryers and charcoal absorbers

Failure Effect

Loss of off-gas treatment and/or inadvertent release of untreated recombined off-gas

2) Line Nos. 20FG-003-059-4, 20FG-003-060-4, 20FG-003-061-4, 20FG-003-062-4, 20FG-003-063-4, 20FG-003-064-4, 20FG-003-065-4, 20FG-003-066-4, 20FG-003-067-4, 20FG-003-198-4

Function

Off-gas system charcoal absorber discharge to HEPA filters and vacuum pumps

Failure Effect

Loss of off-gas treatment

3) Line Nos. 20FG-003-068-4, 20FG-003-069-4, 20FG-003-083-4, 20FG-003-092-4

Function

Off-gas system discharge to main plant stack

Failure Effect

Loss of treated off-gas flow

4) Line Nos. 20FG-008-228-4, 20FG-008-229-4, 20FG-012-003-4, 20FG-012-004-4, 20FG-012-005-4, 20FG-012-009-4,

20FG-012-195-4, 20FG-012-196-4, 20FG-012-230-4, 20FG-012-231-4

Function

Condenser air removal air ejector discharge to off-gas system preheaters, catalytic recombiners, and off-gas condensers

Failure Effect

Loss of off-gas treatment

5) Line Nos. 20FG-002-206-4, 20FG-002-241-4

Function

Off-gas condensers drain to main condenser

Failure Effect

Loss of main condenser vacuum

2. The following is the list of nonsafety-related control components that are affected by a high-energy line break on any of the lines listed in Item 1. The consequence of failure of each control component is analyzed. Refer to Appendix B for the function of individual components.

Additionally, a high energy line break in this zone will also result in failure of control components in Zone D. The significant consequences of such a failure have been integrated into the analysis by referring to the appropriate "Failure Effect" from the above listed zone(s) in the "Combined Effect" section of this zone.

a. Condenser Air Removal (ARC, 5-1)

2ARC-LS111

Failure Effect

Failure of the above level switch will cause the air removal recovery tank 2ARC-TK1 isolation valve 2ARC-SOV111 to the main condenser to open. This will cause the tank to drain its condensate to the main condenser and expose the tank to the main stack which will result in a gradual loss of condenser vacuum.

b. Auxiliary Steam (ASS, 3-9)

1) 2ASS-PIC125

Failure Effect

Failure of this device may cause main steam pressure control valve for off-gas, 2ASS-PV125, to close resulting in loss of heating steam for off-gas preheater, 20FG-E1A and 20FG-E1B. This will reduce performance in the off-gas recombiners, 20FG-RBNR1A and 20FG-RBNR1B. Auxiliary steam is the backup supply for this system.

2) 2ASS-PIC140

Failure Effect

Failure of this device may cause auxiliary steam pressure control valve, 2ASS-PV140, to close resulting in loss of heating steam for off-gas preheaters, 20FG-E1A and 20FG-E1B. This will reduce performance in the off-gas recombiners, 20FG-RBNR1A and 20FG-RBNR1B. Main steam is the normal supply for this system.

c. Off-Gas (OFG, 31-4)

1) 20FG-AOV1A 20FG-SOV1A
20FG-AOV1B 20FG-SOV1B

Failure Effect

If both the above off-gas preheaters (20FG-E1A, E1B) inlet valves fail closed, off-gas removal capability will be lost. Such failure will result in loss of condenser vacuum.

2) 20FG-AOV4A 20FG-SOV4A
20FG-AOV4B 20FG-SOV4B
20FG-AOV4C 20FG-SOV4C

20FG-AOV5A 20FG-SOV5A
20FG-AOV5B 20FG-SOV5B
20FG-AOV5C 20FG-SOV5C
20FG-PDIS117

Failure Effect

Failure of any or all of the above freeze-out dryer inlet or outlet valves in the closed position may result in loss of off-gas removal capability. Such failure will result in loss of condenser vacuum.

3) 20FG-AOV9A 20FG-SOV9A
20FG-AOV9B 20FG-SOV9B

Failure Effect

If either of these preheater strainer blowdown valves fail, open or closed, there is no significant effect.

4) 20FG-AOV11A 20FG-SOV11A
20FG-AOV11B 20FG-SOV11B

Failure Effect

If both the off-gas condenser 20FG-CND1A, 1B outlet valves fail closed, off-gas removal capability will be lost. Such failure will result in loss of condenser vacuum.

5) 20FG-AOV45A 20FG-SOV45A
20FG-AOV45B 20FG-SOV45B
20FG-AOV52A 20FG-SOV52A
20FG-AOV52B 20FG-SOV52B
20FG-PV44A 20FG-SOVX44A (SOV44A1)
20FG-PV44B 20FG-SOVY44A (SOV44A2)
20FG-PT44A 20FG-SOVX44B (SOV44B1)
20FG-PT44B 20FG-SOVY44B (SOV44B2)
20FG-I/P44A 20FG-PIC44A
20FG-I/P44B 20FG-PIC44B

Failure Effect

Failure of these devices can cause the off-gas system vacuum pump inlet and outlet valves to close, thereby shutting down the off-gas system.

If these devices fail such that shutdown of the vacuum pumps due to high radiation is prevented and vacuum pump inlet and outlet valves are maintained open, inadvertent release of off-gas to the main stack will result.

6) 20FG-AOV103 20FG-SOV103

Failure Effect

Failure of the above air-operated stack isolation valve in the closed position will affect the capability of the off-gas system to operate properly, resulting in eventual loss of condenser vacuum.

Failure of the stack isolation valve in the open position may inadvertently release radioactive off-gas to the main stack.

7) 20FG-I/P71A 20FG-PT71A 20FG-PIC71A 20FG-SOV14A
20FG-I/P71B 20FG-PT71B 20FG-PIC71B 20FG-SOV14B

20FG-SOV70A
20FG-SOV70B

Failure Effect

If failure of these devices causes auxiliary steam supply inlet valves to close, a loss of auxiliary steam supply to the associated off-gas preheater will result. This may affect off-gas catalytic recombiner efficiency.

8)

20FG-LT20A	20FG-LV20A	20FG-SOVX20A (SOV20A1)
20FG-LT20B	20FG-LV20B	20FG-SOVY20A (SOV20A2)
20FG-LIC20A		20FG-SOVX20B (SOV20B1)
20FG-LIC20B		20FG-SOVY20B (SOV20B2)

Failure Effect

If the valves fail closed, condensate level in off-gas condensers may rise, affecting the moisture removal capability and the efficiency of the system.

9)

20FG-LV28A	20FG-SOV28A	20FG-LIS28A
20FG-LV28B	20FG-SOV28B	20FG-LIS28B
20FG-LV28C	20FG-SOV28C	20FG-LIS28C

Failure Effect

Failure of any of the above valves will cause water level in the associated off-gas freeze-out dryer to rise. This may affect the efficiency of the off-gas removal system.

If any of these valves fail open, a path will be provided for off-gas to return to the main condenser. Some effect on condenser vacuum may result.

10) 20FG-PV71A, 20FG-PV71B

Failure Effect

Failure of 20FG-PV71A or 20FG-PV71B in the closed position results in loss of the auxiliary steam supply to the associated off-gas preheater. This may affect off-gas catalytic recombiner efficiency.

11) 20FG-RE13A, 20FG-RE13B, 20FG-FT13A, 20FG-FT13B

Failure Effect

Failure of radiation monitors to shut down the off-gas system vacuum pumps and close the stack isolation valve may inadvertently cause release of some radioactive off-gas to the main stack.

12) 20FG-ASHH16A, 20FG-ASHH16B, 20FG-AT16A, 20FG-AT16B

Failure Effect

Failure of any of the above control components to sense high hydrogen level will prevent isolation of the hydrogen recombiners 20FG-RBNR1A, B. If the components fail indicating high hydrogen level inadvertently, thus isolating the condenser off-gas system, main condenser vacuum will gradually be lost due to the loss of the condenser air removal system.

13) 20FG-FSH3A, 20FG-FSH3B, 20FG-FSL3A, 20FG-FSL3B, 20FG-PCV111, 20FG-SOV112, 20FG-FT3A, 20FG-FT3B

Failure Effect

If the above instruments fail causing the service air makeup valves 20FG-SOV112 and 20FG-PCV111 to either fail open or close (one inch line), no significant effect occurs.

14) 20FG-PCV63A, 20FG-PCV63B, 20FG-PCV63C, 20FG-SOV62A, 20FG-SOV62B, 20FG-SOV62C, 20FG-TCV6A, 20FG-TCV6B, 20FG-TCV6C, 20FG-TCV7A, 20FG-TCV7B, 20FG-TCV7C, 20FG-TCV8A, 20FG-TCV8B, 20FG-TCV8C

Failure Effect

If any or all of the above control components fail causing the valves to close, moisture removal capability of the off-gas system will be lost. This will cause loss of off-gas treatment.

3. Combined Effect

a. A break in the condenser air removal high energy line in this zone will result in a loss of main condenser off-gas treatment and a gaseous release of significant radiation levels in the turbine building. This event is bounded by FSAR Section 15.7 analyses. Failure of control components in this zone will cause loss of condenser vacuum bounded by FSAR Section 15.2.5 analyses.

As a result of high energy line break in this zone, control components in Zone D may fail, resulting in any or all of the following events:

1) Loss of feedwater heating in 4th and 6th point heaters, an event bounded by FSAR Section 15.1.1 analyses.

2) Loss of feedwater, an event bounded by FSAR Section 15.2.7 analyses.

3) Turbine trip, an event bounded by FSAR Section 15.2.3 analyses.

4) Loss of condenser vacuum, an event bounded by FSAR Section 15.2.5 analyses.

5) Feedwater controller failure - maximum demand, an event bounded by FSAR Section 15.1.2 analyses.

b-1. A break in the auxiliary steam high energy lines in this zone (Item 1.b.1) will cause a loss of main condenser off-gas treatment capability, resulting in eventual loss of main condenser vacuum. This event is bounded by FSAR Section 15.2.5 analyses.

Failure of control components in this zone can prevent automatic shutdown of the main condenser off-gas system; in combination with reduced treatment efficiency of the off-gas treatment system, this can result in release of radiactive off-gas to the main stack. This event is bounded by FSAR Section 15.7 analyses. For failure of control components in Zone D, refer to Item 3.a.

b-2. A break in the auxiliary steam high energy lines in this zone (Item 1.b.2) will cause a loss of main condenser vacuum. This event is bounded by FSAR Section 15.2.5 analyses. Failure of control components in this zone will cause loss of main condenser off-gas treatment system causing gaseous release of significant radiation levels in the turbine building. This event is bounded by FSAR Section 15.7 analyses. For failure of control components in Zone D, refer to Item 3.a.

c-1. A break in the off-gas system high energy lines in this zone (Items 1.c.1, 1.c.2, 1.c.3, 1.c.4) will result in loss of off-gas treatment and inadvertent gaseous release of significant radiation levels in the turbine building. This event is bounded by FSAR Section 15.7 analyses. Failure of control components in this zone will cause loss of main condenser vacuum bounded by FSAR Section 15.2.5 analyses. For failure of control components in Zone D, refer to Item 3.a.

c-2. A break in the off-gas system high energy line in this zone (Item 1.c.5) will result in loss of main condenser vacuum. This event is bounded by FSAR Section 15.2.5 analyses. Failure of control components in this zone will cause gaseous release of significant radiation levels in the turbine building. This event is bounded by FSAR Section 15.7 analyses. For failure of control components in Zone D, refer to Item 3.a.

APPENDIX D

HIGH ENERGY LINE BREAK ANALYSIS

ZONE AB

Building: Turbine Building
Elevation: 306' - 0"

	HELB System		Control System
1. ASS (3-9)	Auxiliary Steam	TME (16-1)	Turbine Generator Gland Seal and Exhaust
2. HVH (22-16)	Hot Water Heating		
3. TME (16-1)	Turbine Generator Gland Seal and Exhaust		

1. The following is a list of high energy lines analyzed on a system basis:

a. Auxiliary Steam (Nuclear) (ASS, 3-9)

1) Line Nos. 2ASS-016-013-4 and 2ASS-016-014-4

Function

Steam supply to clean steam reboilers 2TME-E1A and 2TME-E1B for turbine generator gland seal and exhaust steam.

Failure Effect

Failure of these lines will result in loss of turbine generator gland seal and exhaust steam. Additionally, failure of these lines will result in loss of extraction steam at fourth point when extraction steam is normal source of heating or auxiliary steam when auxiliary steam is used as a source of heating.

b. Hot Water Heating (HVH, 22-16)

1) Line Nos. 2HVH-004-025-4 and 2HVH-004-026-4

Function

Heating water supply to radwaste building glycol heat exchanger.

Failure Effect

Loss of plant hot water heating.

c. Turbine Generator Gland Seal and Exhaust (TME, 16-1)

1) Line Nos. 2TME-012-76-4, 2TME-012-77-4

Function

Connecting turbine generator steam gland seal and exhaust steam line safety valve 2TME-SV124 and 2TME-SV125 to main condenser.

Failure Effect

Loss of main condenser vacuum.

2) Line Nos. 2TME-012-66-4, 2TME-016-5-4, 2TME-016-6-4

Function

Supplies clean steam for turbine generator gland seal and exhaust.

Failure Effect

Loss of main source for turbine generator gland seal and exhaust steam.

3) Line No. 2TME-006-041-4

Function

Supplies main steam for turbine generator gland seal and exhaust (a backup source).

Failure Effect

Loss of backup source for turbine generator gland seal and exhaust steam.

4) Line No. 2TME-010-038-4

Function

Supplies steam to waste evaporator reboiler 2LWS-E4A.

Failure Effect

Loss of main source for turbine generator gland seal and exhaust steam and loss of condensate.

5) Line Nos. 2TME-008-411-4, 2TME-008-412-4

Function

Connects turbine generator gland seal and exhaust steam header to 2TME-SRV124 and 2TME-SRV125.

Failure Effect

Loss of turbine generator gland seal and exhaust steam.

2. The following is the list of nonsafety-related control components that are affected by a high energy line break on any of the lines listed in Item 1. The consequence of failure of each control component is analyzed. Refer to Appendix B for the function of individual components.

Additionally, a high energy line break in this zone will also result in failure of control components in Zones AC and AD. The significant consequences of such a failure have been integrated into the analysis by referring to the appropriate "Failure Effect" from the above-listed zone(s) in the "Combined Effect" section of this zone.

Turbine Generator Gland Seal and Exhaust (TME, 16-1)

2TME-PT103, 2TME-PT107, 2TME-PC111, 2TME-PV111, 2TME-PCV114

Failure Effect

Failure of any one or all of the above instruments or control devices will result in loss of turbine generator gland seal steam.

3. Combined Effects

a. A break in auxiliary steam high energy line in this zone will result in loss of main source for turbine generator gland seal and exhaust steam from clean steam reboilers. However, a backup source from main steam is available by opening 2TME-MOV110. Loss of extraction steam from fourth point extraction will result in partial loss of feedwater heating at fourth point heaters. Loss of feedwater heating is bounded by FSAR Section 15.1.1 analyses.

Failure of control components in this zone may cause 2TME-MOV110 not to open. This will result in loss of turbine generator gland steam, which will cause air infiltration through the low pressure turbine glands resulting in loss of main condenser vacuum bounded by FSAR Section 15.2.5 analyses.

Failure of control components in Zones AC or AD may cause backup of condensate in the clean steam reboiler resulting in water induction into the turbine. This will result in high turbine vibration and turbine trip. This event is bounded by FSAR Section 15.2.3 analyses.

b. A break in hot water heating high energy line in this zone has no effect on reactor parameters. However, component failure in this zone or in Zones AC or AD can cause loss of turbine generator gland seal and exhaust steam or high turbine vibration leading to turbine trip. These events are analyzed above in Item 3a.

c. 1) A break in turbine generator gland seal and exhaust steam high energy line in this zone (Item 1.c.1) results in loss of main condenser vacuum, bounded by FSAR Section 15.2.5. Control system component failure does not exacerbate this event.

2) A break in turbine generator gland seal and exhaust steam high energy line in this zone (Item 1.C.2, 1.C.4) will cause the loss of main source for turbine generator gland seal steam. However, a backup source from main steam is available. Refer to Item 3.a above for control component failure.

3) A break in turbine generator gland seal and exhaust steam high energy line (Item 1.C.3) in this zone will cause the loss of backup source for turbine generator gland seal steam. However, if failure of control components causes loss of main seal steam source, then loss of main condenser vacuum will result as described above in 3a. Control component failure effects for Zones AC and AD are discussed in Item 3.a above.

4) A break in a turbine generator gland seal and exhaust steam header relief valve line will result in loss of turbine seal steam. This results in loss of main condenser vacuum bounded by FSAR Section 15.2.5. Failure of control components in this zone does not exacerbate this event. Failure of control components in Zones AC or AD is discussed in Item 3.a above.

APPENDIX D

HIGH ENERGY LINE BREAK ANALYSIS

ZONE AC

Building: Turbine Bldg.
Elevation: 306'-0"

HELB System		Control System	
ASS (3-9)	Auxiliary Steam	TME (16-1)	Turbine Generator Gland Seal and Exhaust
CNA (4-4)	Auxiliary Condensate		
TME (16-1)	Turbine Generator Gland Seal and Exhaust		

1. The following is a list of high energy lines analyzed on a system basis:

a. Auxiliary Steam (ASS, 3-9)

Line Nos. 2ASS-016-013-4 and 2ASS-016-014-4

Function

Steam supply to clean steam reboilers 2TME-E1A and 2TME-E1B for turbine generator gland seal and exhaust steam.

Failure Effect

Failure of these lines will result in loss of main supply to turbine generator gland seal and exhaust steam. Additionally, failure of these lines will result in loss of extraction steam at fourth point when extraction steam is normal source of heating or auxiliary steam when auxiliary steam is used as a source of heating. A partial loss of 4th point feedwater heating will also result.

b. Auxiliary Condensate (CNA, 4-4)

1) Line Nos. 2CNA-002-013-4, 2CNA-002-015-4, 2CNA-004-014-4

Function

Instrument standpipe and standpipe connections for level measurement to reboiler drain tank 2CNA-TK1A.

Failure Effect

Loss of condensate at reboiler drain tank 2CNA-TK1A, and partial loss of condensate heating at 3rd point heaters 2CNM-E3A, 3B, 3C.

2) Line Nos. 2CNA-150-6-4, 2CNA-150-044-4, 2CNA-006-052-4

Function

Drain and vent lines to main condenser.

Failure Effect

Loss of main condenser vacuum.

3) Line Nos. 2CNA-006-002-4

Function

Condensate line from reboiler drain tank 2CNA-TK1A to 3rd point heaters 2CNM-E3A, 3B, and 3C.

Failure Effect

Partial loss of condensate and partial loss of condensate heating at 3rd point heaters 2CNM-E3A, 3B, and 3C.

c. Turbine Generator Gland Seal and Exhaust (TME, 16-1)

1) Line Nos. 2TME-003-57-4, 2TME-012-76-4, 2TME-008-84-4

Function

Turbine generator gland seal and exhaust steam drains to main condenser.

Failure Effect

Loss of main condenser vacuum.

2) Line Nos. 2TME-016-06-4, 2TME-016-5-4

Function

Supplies clean steam for turbine generator gland seal and exhaust steam.

Failure Effect

Loss of main source for turbine generator gland seal and exhaust steam.

3) Line Nos. 2TME-003-59-4, 2TME-003-55-4

Function

Clean steam reboiler 2TME-E1A, E1B, shell blowdown lines to main condenser before MOVs.

Failure Effect

Loss of main source for turbine generator gland seal and exhaust steam and partial loss of condensate inventory.

2. The following is the list of nonsafety-related control components that are affected by a high energy line break on any of the lines listed in Item 1. The consequence of failure of each control component is analyzed. Refer to Appendix B for the function of individual components.

Additionally, a high energy line break in this zone will also result in failure of control components as described in Zone AB, Item 2. The significant consequences of such a failure have been integrated into the analysis by referring to Zone AB control components failure in the "Combined Effects" section of this zone.

a. Turbine Generator Gland Seal and Exhaust (TME, 16-1)

1) 2TME-LS12A, 2TME-LS13A, 2TME-LT13A, 2TME-LV13A, 2TME-SOV13A

Failure Effect

Failure of the above devices will cause condensate to infiltrate into the turbine generator gland seal and exhaust system which may result in water induction to the turbine. This in turn may cause turbine vibration leading to a turbine trip.

2) 2TME-HV21A, 2TME-SOV21A

Failure Effect

Failure of the above devices which results in closure of 2TME-HV21A will stop condensate flow to the clean steam boiler, 2TME-E1A, which could stop gland seal steam. However, there is a backup source for gland seal steam in zone AD. There is also an alternate source of gland seal steam from the main steam system.

3. Combined Effect

a. A break in auxiliary steam high energy line in this zone will result in loss of main source for turbine generator gland seal and exhaust steam. However, a backup source from main steam is available. A loss of extraction steam from fourth point extraction will result in partial loss of feedwater heating at fourth point heaters. Loss of feedwater heating is bounded by FSAR Section 15.1.1 analyses.

If control components in this zone fail to isolate the clean steam reboilers, condensate may back up and infiltrate into turbine generator gland seals and turbine trip may occur due to high turbine vibrations. This event is bounded by FSAR Section 15.2.3.

Failure of control components in Zone AB may result in loss of turbine generator gland sealing steam supplied from both the primary and backup source. Loss of main condenser vacuum will occur due to air infiltration to the condenser through the low pressure turbine glands. This event is bounded by FSAR Section 15.2.5 analyses.

b. 1) A break in auxiliary condensate high energy line (Item 1.b.1, 1.b.3) results in partial loss of feedwater heating at 3rd point heater, bounded by FSAR Section 15.1.1 analyses. Control component failure in this zone and Zone AB is described above in Item 3.a.

2) A break in auxiliary condensate high energy line (Item 1.b.2) results in loss of main condenser vacuum bounded by FSAR Section 15.2.5. Control component failure in this zone is described above in 3.a. Control component failure in Zone AB does not exacerbate this event any further.

c. 1) A break in turbine generator gland seal and exhaust steam high energy line (Item 1.c.2, 1.c.3) in this zone results in loss of main source of turbine gland seal steam and/or partial loss of condensate inventory. Backup source of main steam is available for turbine gland seals, and the loss of condensate will be made up by the condensate make-up and drawoff. This event, therefore, results in no significant effect. Control component failure in this zone and zone AB is described above in Item 3.a.

2) A break in any turbine generator gland seal and exhaust steam high energy line (Item 1.c.1) results in loss of main condenser vacuum. Results of loss of main condenser vacuum are analyzed in Item 3.b.2.

APPENDIX D

HIGH ENERGY LINE BREAK ANALYSIS

ZONE AD

Building: Turbine Bldg.
Elevation: 306'-0"

HELB System		Control System	
ASS (3-9)	Auxiliary Steam	TME (16-1)	Turbine Generator Gland Seal and Exhaust
CNA (4-4)	Auxiliary Condensate		
TME (16-1)	Turbine Generator Gland Seal and Exhaust		

1. The following is a list of high energy lines analyzed on a system basis:

   a. Auxiliary Steam (ASS, 3-9)

      Line Nos. 2ASS-016-013-4 and 2ASS-016-014-4

      Function

      Steam supply to clean steam reboilers 2TME-E1A, E1B for turbine generator gland seal and exhaust steam.

      Failure Effect

      Failure of these lines will result in loss of main supply to turbine generator gland seal and exhaust steam. Additionally, failure of these lines will result in loss of extraction steam at fourth point when extraction steam is normal source of heating or auxiliary steam when auxiliary steam is used as a source of heating. A partial loss of 4th point feedwater heating will also occur.

   b. Auxiliary Condensate (CNA, 4-4)

      1) Line Nos. 2CNA-002-16-4, 2CNA-002-20-4, 2CNA-004-17-4

         Function

         Instrument standpipe for reboiler drain tank 2CNA-TK1B.

Failure Effect

Loss of condensate at reboiler drain tank 2CNA-TK1B and partial loss of condensate heating at 3rd point heaters 2CNM-E3A, 3B, and 3C.

2) Line Nos. 2CNA-006-18-4, 2CNA-150-55-4, 2CNA-150-56-4

Function

Drains and vent lines to main condenser.

Failure Effect

Loss of main condenser vacuum.

3) Line Nos. 2CNA-006-008-4

Function

Condensate line from reboiler drain tank 2CNA-TK1B to 3rd point heaters 2CNM-E3A, 3B, and 3C.

Failure Effect

Partial loss of condensate and partial loss of condensate heating at 3rd point heaters 2CNM-E3A, 3B, and 3C.

c. Turbine Generator Gland Seal and Exhaust (TME, 16-1)

1) Line Nos. 2TME-008-85-4, 2TME-012-077-4

Function

Relief and drain lines to main condenser.

Failure Effect

Loss of main condenser vacuum.

2) Line Nos. 2TME-003-055-4, 2TME-003-60-4

Function

Clean steam reboiler 2TME-E1B shell blowdown lines to main condenser before MOVs.

Failure Effect

Loss of main source for gland seal and exhaust steam and partial loss of condensate inventory.

2. The following is the list of nonsafety-related control components that are affected by a high energy line break on any of the lines listed in Item 1. The consequence of failure of each control component is analyzed. Refer to Appendix B for the function of individual components.

Additionally, a high energy line break in this zone will also result in failure of control components as described in Zone AB, Item 2. The significant consequences of such a failure have been integrated into the analysis by referring to Zone AB control components failure in the "Combined Effects" section of this zone.

a. Turbine Generator Gland Seal and Exhaust (TME, 16-1)

1) 2TME-LS12B, 2TME-LS13B, 2TME-LT13B, 2TME-LV13B, 2TME-SOV13B

Failure Effect

Failure of the above devices will cause condensate to infiltrate into the turbine generator gland seal and exhaust system, which may result in water induction to the turbine. This in turn may cause turbine vibration leading to a turbine trip.

2) 2TME-HV21B, 2TME-SOV21B

Failure Effect

Failure of the above devices which results in closure of 2TME-HV21B will stop condensate flow to the clean steam boiler, 2TME-E1B, which could stop gland seal steam. However, there is a backup source for gland seal steam in zone AC. There is also an alternate source of gland seal steam from the main steam system.

3. Combined Effect

a. A break in auxiliary steam high energy line in this zone results in loss of main source of turbine generator gland seal and exhaust steam and partial loss of feedwater heating at fourth point heaters. Loss of feedwater heating is bounded by FSAR Section 15.1.1 analyses. Turbine seals are maintained by main steam as backup source.

If control components in this zone fail to isolate the clean steam reboilers, condensate may back up and infiltrate into turbine generator gland seals and turbine trip may occur due to high turbine vibrations, bounded by FSAR Section 15.2.3.

Failure of control components in Zone AB may result in loss of turbine generator gland sealing steam supplied from both the primary and backup source. Loss of main condenser vacuum will occur due to air infiltrate to the condenser through the low pressure turbine glands. This event is bounded by FSAR Section 15.2.5 analyses.

b. 1) A break in auxiliary condensate high energy line (Item 1.b.1 and 1.b.3) results in partial loss of feedwater heating at third point heaters, bounded by FSAR Section 15.1.1 analyses. Control component failure in this zone and Zone AB is described above in Item 3.a.

2) A break in auxiliary condensate high energy line (Item 1.b.2) results in loss of main condenser vacuum bounded by FSAR Section 15.2.5. Control component failure in this zone is described in Item 3.a. Control component failure in Zone AB does not exacerbate this event any further.

c. 1) A break in turbine generator gland seal and exhaust steam high energy line (Item 1.c.2) in this zone results in loss of main source of turbine gland seal steam. Backup source of main steam is available for turbine gland seals, and the loss of condensate will be made up by the condensate makeup and drawoff. This event, therefore, results in no significant effect. Control component failure in this zone or zone AB is described in Item 3.a.

2) A break in any turbine generator gland seal and exhaust steam high energy line (Item 1.c.1) results in loss of main condenser vacuum. Results of loss of main condenser vacuum are analyzed in Item 3.b.2.

APPENDIX D

HIGH ENERGY LINE BREAK ANALYSIS

ZONE AF

Building: Turbine Building
Elevation: 277 ft 6 in.

	HELB System	Control System
HVH (22-16)	Hot Water Heating	None

1. The following is a list of high-energy lines analyzed on a system basis:

   Hot Water Heating (HVH, 22-16)

   Line No. 2HVH-004-025-4,
   2HVH-004-026-4

   Function

   Hot water heating pump 2HVH-P1A and P1B discharge header to turbine building, radwaste, and reactor building.

   Failure Effect

   Loss of building heating.

2. There are no nonsafety-related control components in this zone affected by a high-energy line break on any of the lines listed in Item 1.

   However, a high-energy line break in this zone will also result in failure of control components in Zone S. The significant consequences of such a failure have been integrated into the analysis by referring to the appropriate "Failure Effect" from Zones S in the "Combined Effect" section of this zone.

3. Combined Effect

   A break in the hot water heating high-energy lines in this zone will have no significant effect on reactor parameters. Also, there are no control components in this zone requiring analysis. It is unlikely that a break in these high-energy lines would have any

significant effect on control components in Zone S. Failure of components in Zone S, however, might lead to high turbine vibration and turbine trip due to water induction or loss of turbine lube oil or lube oil cooling. This event is bounded by FSAR Section 15.2.3 analyses.

APPENDIX D

HIGH ENERGY LINE BREAK ANALYSIS

ZONE A

Building: Turbine Building
Location: El 277 ft 6 in.

HELB System		Control System	
ARC (5-1)	Condenser Air Removal	CND (4-7)	Condensate Demineralizer
ASS (3-9)	Auxiliary Steam (Nuclear)	CNM (4-1)	Condensate
		CWS (2-1)	Circulating Water
CNA (4-4.1)	Auxiliary Condensate	DTM (32-5)	Turbine Building Miscellaneous Drains
		HRS (3-3)	Hot Reheat System
CNM (4-1.3)	Condensate	MSS (3-1)	Main Steam (B-22)
DSM (32-7)	Moisture Separator Vents and Drains	SVH (32-14)	Feedwater Heater Relief Drains and Vents
		TMA (1-4)	Turbine Trips
DSR (32-6)	Moisture Separator Reheater Vents and Drains	TMB (16-5.2)	Turbine Generator EH Fluid System
		TML (16-2)	Turbine Generator Lube Oil
DTM (32-5)	Turbine Building Miscellaneous Drains	TMS (16-9)	Turbine Generator Exhaust Hood Spray
ESS (3-4)	Extraction Steam		
FWR (6-3)	FDW Pump Recirculation		
FWS (6-1)	Feedwater System		
HDL (4-2)	Low-Pressure Feedwater Heater Drain		
HRS (3-3)	Hot Reheat		

MSS (3-1) Main Steam

OFG (31-4) Off-Gas

SVH (32-14) FDW Heater Relief Vents and Drains

TME (16-1) Turbine Generator Gland Seal and Exhaust

1. The following is a list of high energy lines analyzed on a system basis for this zone.

   a. Condenser Air Removal (ARC, 5-1)

      Line Nos. 2ARC-010-607-4 and 2ARC-010-608-4

      Function

      Intercondenser 2ARC-E3A (2ARC-E3B) shellside safety valve 2ARC-SV-19A (2ARC-SV-19B) discharge to main condenser

      Failure Effect

      Loss of condenser vacuum

   b. Auxiliary Steam (ASS, 3-9)

      1) Line No. 2ASS-010-504-4

         Function

         Auxiliary steam header to clean steam reboiler safety valve 2ASS-SV101 discharge to main condenser

         Failure Effects

         Loss of condenser vacuum

      2) Line No. 2ASS-010-520-4

         Function

         Auxiliary steam header to condenser air removal system safety valve 2ASS-SV102 discharge to main condenser

         Failure Effect

         Loss of condenser vacuum

c. Auxiliary Condensate (CNA, 4-4)

1) Line No. 2CNA-006-002-4

Function

Reboiler drain tank 2CNA-TK1 discharge to the third point heaters 2CNM-E3A, B, C

Failure Effect

Partial loss of feedwater heating in third point heaters 2CNM-E3A, B, C

2) Line No. 2CNA-150-006-4

Function

Vent line from reboiler drain tank 2CNA-TK1A to the condenser

Failure Effect

Loss of condenser vacuum

3) Line No. 2CNA-008-180-4

Function

Reboiler drain tank discharge line to the condenser

Failure Effect

Loss of condenser vacuum

d. Condensate (CNM, 4-1)

Line Nos. 2CNM-006-321-4, 2CNM-006-322-4, 2CNM-006-323-4

Function

Relief valves 2CNM-RV61A, B and C discharge line to condenser

Failure Effect

Loss of condenser vacuum

e. Moisture Separator Vents and Drains (DSM, 32-7)

1) Line No. 2DSM-016-1-4

Function

Moisture separator drain receiver tank 2DSM-TK4A discharge line to fourth point feedwater heaters 2CNM-E4A, B, and C

Failure Effect

Partial loss of feedwater heating in fourth points heaters 2CNM-E4A, B, C

2) Line Nos. 2DSM-016-8-4, 2DSM-016-26-4

Function

Moisture separator drain receivers 2DSM-TK4A and 2DSM-TK4B to the main condenser

Failure Effect

Loss of condenser vacuum

f. Moisture Separator Reheater Vents and Drains (DSR, 32-6)

1) Line No. 2DSR-008-122-4, 2DSR-008-121-4

Function

2DSR-SV85A, B discharge to main condenser

Failure Effect

Loss of condenser vacuum

2) Line No. 2DSR-016-1-4

Function

Reheater drain receiver 2DSR-TK6A discharge line to the sixth point heaters 2FWS-E6A, B, C

Failure Effect

Partial loss of feedwater heating in the sixth point heaters 2FWS-E6A, B, C

3) Line Nos. 2DSR-016-7-4, 2DSR-016-8-4

Function

Reheater drain receiver 2DSR-TK6A discharge lines to the condenser

Failure Effect

Loss of condenser vacuum

4) Line No. 2DSR-016-21-4

Function

Reheater drain receiver 2DSR-TK6B discharge line to the condenser

Failure Effect

Loss of condenser vacuum

5) Line Nos. 2DSR-006-106-4, 2DSR-018-108-4, 2DSR-006-105-4, 2DSR-018-107-4

Function

Scavenging steam line from reheater drain receiver 2DSR-TK6A, B to the main condenser

Failure Effect

Loss of condenser vacuum

6) Line No. 2DSR-008-104-4

Function

Reheater drain receivers 2DSR-TK6A vent line to the sixth point heaters 2FWS-E6A, B, C

Failure Effect

Partial loss of feedwater heating in the 6th point heater 2FWS-E6A, B, C

g. Turbine Building Miscellaneous Drains (DTM, 32-5)

1) Line Nos. 2DTM-002-5-4, 2DTM-002-6-4, 2DTM-002-7-4, 2DTM-002-333-4, 2DTM-002-334-4, 2DTM-002-335-4, 2DTM-012-297-4

Function

(2ESS-MOV15A, B, C) Upstream drain lines from extraction steam to main condenser

Failure Effect

Loss of condenser vacuum

2) Line Nos. 2DTM-125-143-4, 2DTM-150-144-4, 2DTM-125-145-4, 2DTM-150-146-4, 2DTM-003-142-4

Function

From air ejector motive steam line strainer blowdown drains and condenser air removal lines to condenser

Failure Effect

Loss of condenser vacuum

3) Line Nos. 2DTM-004-275-4, 2DTM-004-276-4

Function

Drain line from 2HRS-SV5A, B, C and 2RHS-SV6A, B, C to main condenser

Failure Effect

Loss of condenser vacuum

4) Line No. 2DTM-002-512-4

Function

From turbine generator gland seal and exhaust and steam low point drains to main condenser

Failure Effect

Loss of condenser vacuum

5) Line Nos. 2DTM-020-68-4, 2DTM-002-69-4, 2DTM-002-70-4, 2DTM-002-71-4, 2DTM-002-72-4, 2DTM-002-73-4, 2DTM-002-74-4, 2DTM-002-75-4, 2DTM-002-76-4

Function

Cold reheat line drains to the main condenser

Failure Effect

Loss of condenser vacuum

6) Line Nos. 2DTM-002-510-4, 2DTM-002-511-4

Function

Hot reheat low point drains to the main condenser

Failure Effect

Loss of condenser vacuum

7) Line No. 2DTM-150-263-4, 2DTM-150-366-4, 2DTM-150-367-4

Function

Auxiliary steam line heater drain to the main condenser

Failure Effect

Loss of condenser vacuum

8) Line No. 2DTM-006-470-4

Function

Auxiliary sealing steam low point drain header to the main condenser

Failure Effect

Loss of condenser vacuum

9) Line Nos. 2DTM-025-173-4, 2DTM-025-174-4, 2DTM-025-175-4, 2DTM-010-179-4

Function

Combined intermediate valve (CIV-4, 5, and 6) first steam leakoff from turbine generator gland seal and exhaust drain lines to main condenser

Failure Effect

Loss of condenser vacuum

10) Line No. 2DTM-004-314-4

Function

Steam seal header low point drain from turbine generator gland seal and exhaust steam to main condenser

Failure Effect

Loss of condenser vacuum

11) Line Nos. 2DTM-025-170-4, 2DTM-025-176-4, 2DTM-025-177-4, 2DTM-010-181-4

Function

Combined intermediate valve (CIV-1, 2, 3) first steam leakoffs from turbine generator gland seal and exhaust system to the main condenser

Failure Effect

Loss of condenser vacuum

12) Line Nos. 2DTM-006-309-4, 2DTM-006-310-4, 2DTM-006-311-4, 2DTM-006-312-4, 2DTM-018-313-4

Function

High pressure turbine second steam leakoffs from turbine generator gland seal and exhaust steam to the main condenser

Failure Effect

Loss of condenser vacuum.

13) Line Nos. 2DTM-150-231-4, 2DTM-150-232-4, 2DTM-150-233-4, 2DTM-150-234-4, 2DTM-150-235-4, 2DTM-150-236-4

Function

Turbine exhaust hood bearing cones-waste, water and oil drains

Failure Effect

No significant effect

h. Extraction Steam (ESS, 3-4)

1) Line Nos. 2ESS-014-1-4, 2ESS-014-2-4

Function

Extraction steam line from H.P. turbine discharge to sixth point heaters FWS-E6A, B, and C

Failure Effect

Partial loss of feedwater heating to the sixth point heaters FWS-E6A, B, and C

2) Line No. 2ESS-003-4-4

Function

High pressure turbine header drain line to main condenser

Failure Effect

Partial loss of feedwater heating to sixth point heaters FWS-E6A, B, C

3) Line No. 2ESS-006-251-4

Function

From extraction steam fifth point heaters 2CNM-E5A, B and C header line to building heating intermediate heat exchangers 2HVH-E1A and 2HVH-E1B header line

Failure Effect

Partial loss of feedwater heating in the fifth point heaters 2CNM-E5A, B, C due to loss of extraction steam

4) Line Nos. 2ESS-014-120-4, 2ESS-014-24-4, 2ESS-014-121-4, 2ESS-014-27-4, 2ESS-014-122-4, 2ESS-014-30-4

Function

Extraction steam lines from LP turbines 2TMS-T2A, B, C to the fourth point heaters 2CNM-E4A, B, C

Failure Effect

Loss of feedwater heating in the fourth point heaters 2CNM-E4A, B, C and loss of extraction steam

5) Line Nos. 2ESS-026-126-4, 2ESS-026-34-4, 2ESS-026-127-4, 2ESS-026-39-4, 2ESS-026-128-4, 2ESS-026-42-4

Function

Extraction steam lines from LP turbines 2TMS-T2A, B, C to the third point heater 2CNM-3A, B, C

Failure Effect

Loss of feedwater heating in third point heaters 2CNM-E3A, B, C and loss of extraction steam

6) Line Nos. 2ESS-004-37-4, 2ESS-004-38-4

Function

High pressure turbine 2TMS-T1 gland steam packing to the third point heaters 2CNM-E3A, B, and C

Failure Effect

Partial reduction of feedwater heating to third point heaters 2CNM-E3A, B, and C

i. FDW Pump Recirculation (FWR, 6-3)

Line Nos. 2FWR-020-4-4, 2FWR-020-5-4, 2FWR-020-6-4

Function

Feedwater recirculation lines from 2FWR-FV2A, B, C to the main condenser

Failure Effect

Loss of condenser vacuum

j. Feedwater (FWS, 6-1)

Line Nos. 2FWS-008-117-4, 2FWS-014-142-4, 2FWS-008-120-4, 2FWS-014-143-4, 2FWS-008-122-4, 2FWS-014-144-4

Function

High energy feedwater cycle cleanup lines to the drain condenser

Failure Effect

Loss of condenser vacuum

k. Low Pressure Feedwater Heater Drains (HDL, 4-2)

1) Line Nos. 2HDL-002-103-4, 2HDL-002-104-4, 2HDL-004-105-4, 2HDL-002-113-4, 2HDL-002-114-4, 2HDL-004-115-4, 2HDL-002-123-4, 2HDL-002-124-4, 2HDL-004-125-4

Function

Standpipe connections for first point heaters 2CNM-E1A, B, C level measurement

Failure Effect

Loss of condenser vacuum.

2) Line Nos. 2HDL-014-101-4, 2HDL-014-111-4, 2HDL-014-121-4

Function

First point heaters 2CNM-E1A, B, and C drain connection to main condenser

Failure Effect

Loss of condenser vacuum

3) Line Nos. 2HDL-014-201-4, 2HDL-014-211-4, 2HDL-014-221-4

Function

Drain lines from second point heaters 2CNM-E2A, B, C to the drain receivers 2HDL-TK2A, B, C

Failure Effect

Loss of feedwater heating in the second point heaters 2CNM-E2A, B, C due to loss of condensate

4) Line Nos. 2HDL-004-209-4, 2HDL-004-219-4, 2HDL-004-229-4

Function

Steam line connection from drain receivers 2HDL-TK2A, B, C to second point heaters 2CNM-E2A, B, and C

Failure Effect

Loss of feedwater heating in the second point heaters 2CNM-E2A, B, and C

l. Hot Reheat (HRS, 3-3)

Line Nos. 2HRS-026-1-4, 2HRS-026-2-4, 2HRS-026-3-4, 2HRS-026-4-4, 2HRS-026-5-4, 2HRS-026-6-4

Function

Hot reheat safety valves 2HRS-SV5A, B, C and 2HRS-SV6A, B, C discharge to the main condenser

Failure Effect

Loss of condenser vacuum

m. Main Steam (MSS, 3-1)

Line No. 2MSS-010-189-4

Function

Main steam line drain header to main condenser

Failure Effect

Loss of condenser vacuum

n. Off-Gas (OFG, 31-4)

1) Line No. 20FG-003-200-4

Function

Off-gas filter 20FG-FLT1B inlet

Failure Effect

Loss of off-gas system

2) Line No. 20FG-003-201-4

Function

Off-gas vacuum pump suction header

Failure Effect

Loss of off-gas system

o. FDW Heater Relief Vents and Drains (SVH, 32-14)

1) Line Nos. 2SVH-002-101-4, 2SVH-002-131-4, 2SVH-002-161-4, 2SVH-002-201-4, 2SVH-002-231-4, 2SVH-002-261-4,

Function

First point feedwater heaters 2CNM-E1A, B, C and second point feedwater heaters 2CNM-E2A, B, C drain lines to the main condenser

Failure Effect

Loss of condenser vacuum

2) Line Nos. 2SVH-025-206-4, 2SVH-025-205-4, 2SVH-025-236-4, 2SVH-025-235-4, 2SVH-025-266-4, 2SVH-025-265-4

Function

Second point feedwater heaters 2CNM-E2A, B, C vent lines to the main condenser

Failure Effect

Loss of condenser vacuum

3) Line Nos. 2SVH-008-604-4, 2SVH-008-504-4, 2SVH-008-404-4, 2SVH-008-805-4, 2SVH-002-704-4, 2SVH-004-207-4, 2SVH-004-105-4, 2SVH-004-106-4, 2SVH-002-204-4, 2SVH-002-104-4, 2SVH-024-901-4, 2SVH-008-634-4, 2SVH-008-534-4, 2SVH-008-434-4, 2SVH-008-835-4, 2SVH-002-734-4, 2SVH-004-237-4, 2SVH-004-135-4, 2SVH-004-136-4, 2SVH-002-234-4, 2SVH-002-134-4, 2SVH-024-931-4, 2SVH-008-664-4, 2SVH-008-564-4, 2SVH-008-464-4, 2SVH-008-865-4, 2SVH-002-764-4, 2SVH-004-267-4, 2SVH-004-165-4, 2SVH-004-166-4, 2SVH-002-264-4, 2SVH-002-164-4, 2SVH-024-961-4

Function

Feedwater heaters relief vent, drain lines and headers to the condenser

Failure Effect

Loss of condenser vacuum

p. Turbine Generator Gland Seal and Exhaust (TME, 16-1)

1) Line Nos. 2TME-003-57-4, 2TME-003-58-4

Function

Clean steam boiler 2TME-E1A drain line to the main condenser

Failure Effect

Loss of condenser vacuum

2) Line No. 2TME-012-76-4

Function

Clean steam header safety valve 2TME-SV125 discharge to the main condenser

Failure Effect

Loss of condenser vacuum

3) Line Nos. 2TME-003-78-4, 2TME-006-79-4, 2TME-003-80-4

Function

Main steam control valve, stop valve, and bypass valve gland sealing steam discharge lines to the main condenser

Failure Effect

Loss of condenser vacuum

2. The following is the list of nonsafety-related control components that are affected by a high energy line break on any of the lines listed in Item 1. The consequence of failure of each control component is analyzed. Refer to Appendix B for function of individual components.

Additionally, a high energy line break in this zone will also result in failure of control components in Zones D and AB. The significant consequences of such a failure have been integrated into the analysis by referring to the appropriate Failure Effect from the above listed zones in the Combined Effect section of this zone.

a. Condensate Demineralizer (CND, 4-7)

2CND-FV294

Failure Effect

Failure of condensate system recycle outlet valve 2CND-FV294 in open position will bypass a portion of demineralized condensate to main condenser, resulting in additional inventory to main condenser. Condensate hotwell level is maintained by level control valve 2CNS-LV103 and LV105. Therefore, failure of 2CND-FV294 has no significant effect.

b. Condensate (CNM, 4-1)

2CNM-TV121

Failure Effect

If temperature valve 2CNM-TV121 fails closed, high turbine hood temperature can result, which can trip turbine.

c. Circulating Water (CWS, 2-1)

2CWS-LS51A, 2CWS-LS51B, 2CWS-LS51C, 2CWS-LS51D, 2CWS-LS51E, 2CWS-LS51F

Failure Effect

Failure of any or all of the above level switches has no significant effect on reactor parameters.

d. Turbine Building Miscellaneous Drain (DTM, 32-5)

2DTM-AOV111, 2DTM-SOV111, 2DTM-AOV166, 2DTM-SOV166, 2DTM-AOV102, 2DTM-SOV102, 2DTM-AOV143, 2DTM-SOV143, 2DTM-AOV5A, 2DTM-SOV5A, 2DTM-AOV5B, 2DTM-SOV5B, 2DTM-AOV5C, 2DTM-SOV5C

Failure Effect

If any or all of these valves fail open, no significant effect occurs

e. Hot Reheat System (HRS, 3-3)

1) 2HRS-PS107

Failure Effect

Failure of the above pressure switch will cause inadvertent closure of moisture separator reheaters 2MSS-E1A, B, main steam supply valves 2MSS-AOV92A, B, which can result in reduction of hot reheat steam temperature to low-pressure turbine.

Failure of this instrument will also cause inadvertent opening of moisture separator drain receiver tanks 2DSM-TK4A, B drain valves 2DSM-LV78A, B to the main condenser which will result in partial loss of feedwater heating in the 4th point heaters 2CNM-E4A, B, C.

2) 2HRS-PS108

Failure Effect

Failure of the above pressure switch will fail the valves 2DSR-AOV82A, B in the open position, valves 2DSR-AOV83A, B in the close position, and 2DSR-LV68A, B in the open position, which will result in a partial loss of feedwater heating in the 6th point heaters 2FWS-E6A, B, C.

3) 2HRS-CIV1, 2HRS-CIV2, 2HRS-CIV3, 2HRS-CIV4, 2HRS-CIV5, 2HRS-CIV6

Failure Effect

Failure of any or all of the above control valves in the close position will result in partial or total loss of hot reheat steam to the low-pressure turbines, 2TMS-T2A, B, C. This will cause a turbine trip.

f. Main Steam (MSS, 3-1)

1) 2MSS-AOV191, 2MSS-SOV191, 2MSS-AOV194, 2MSS-SOV194, 2MSS-AOV203, 2MSS-SOV203, 2MSS-AOV205, 2MSS-SOV205

Failure Effect

If any or all of the above valves fail open, no significant impact results

2) 2MSS-PSV89A, 2MSS-PSV89B, 2MSS-PSV89C, 2MSS-PSV89D, 2MSS-PS89E

Failure Effect

Failure of any or all of the above valves in the open position will cause dumping of main steam to the main condenser through the turbine bypass lines. This will cause reduction of main steam flow to the turbine, and possible loss of condenser vacuum if the circulating water temperature is high reducing condensing effect, which helps maintain main condenser vacuum.

g. Feedwater Heater Relief Drains and Vents (SVH,32-14)

1) 2SVH-HV14A, 2SVH-SOV14A, 2SVH-HV14B, 2SVH-SOV14B, 2SVH-HV14C, 2SVH-SOV14C, 2SVH-HV24A, 2SVH-SOV24A, 2SVH-HV24B, 2SVH-SOV24B, 2SVH-HV24C, 2SVH-SOV24C

Failure Effect

Failure of the above heater channel drain valves in open or close position has no significant effect

2) 2SVH-HV1A, 2SVH-SOV1A, 2SVH-HV1B, 2SVH-SOV1B, 2SVH-HV1C, 2SVH-SOV1C, 2SVH-HV2A, 2SVH-SOV2A, 2SVH-HV2B, 2SVH-SOV2B, 2SVH-HV2C, 2SVH-SOV2C

Failure Effect

Failure of the above heater shell vent valves in open or close position has no significant effect

h. Turbine Trips (TMA, 1-4)

1) 2TMA-PSX1A, 2TMA-PSX1B, 2TMB-PSX1C, 2TMA-PSY1A, 2TMA-PSY1B, 2TMB-PSY1C

Failure Effect

Failure of the above pressure switches (one out of three X and one out of three Y) may cause inadvertent turbine trip. Also, failure of these instruments may prevent turbine trip during low condenser vacuum. This event will not pose any serious threat to the reactor because Category I condenser vacuum transmitter 2CNM*PT46A, B, C, D, will signal the main steam isolation valves to close and the reactor to scram.

2) 2TMA-TS3A, 2TMA-TS3B, 2TMS-T3C

Failure Effect

Failure of any or all of the above temperature switches such that turbine exhaust hood temperature high-high is indicated will result in turbine trip.

Failure of all of the above temperature switches to indicate turbine exhaust hood high-high temperature would prevent turbine trip and possibly cause high turbine vibration and trip.

i. Turbine Generator EH Fluid System (TMB, 16-5.2)

1) 2TMB-HVY130

Failure Effect

Inadvertent failure of 2TMB-HVY130 may result in closure of moisture separator main steam supply valve 2MSS-PV28A, 2MSS-PV28B, 2MSS-PV29A and 2MSS-PV29B. Loss of main steam supply to moisture separators will result in low turbine efficiency; therefore, failure of this instrument has no significant effect on reactor parameters.

2) 2TMB-PS2A, 2TMB-PS2B, 2TMB-PS12A, 2TMB-PS12B, 2TMB-PSX13A, 2TMB-PSX13B, 2TMB-PSY13A, 2TMB-PSY13B, 2TMB-PS109, 2TMB-PS110, 2TMB-PS111, 2TMB-PS112

Failure Effect

Failure of any or all of the above pressure switches will cause EHC fluid pumps 2TMB-P1A (or B) to malfunction on low electrohydraulic pressure. Loss of electrohydraulic pressure will ultimately cause the turbine trip.

3) 2TMB-SE123, 2TMB-SE124, 2TMB-SE125

Failure Effect

Failure of any or all of the above turbine speed switches may cause inadvertent turbine trip if either the turbine shaft pump lube oil discharge pressure is low or EHC dc control power is lost.

j. Turbine Generator Lube Oil (TML, 16-2)

1) 2TML-PS14A, 2TML-PS14B, 2TML-PS14C, 2TML-PS14D, 2TML-PS14E, 2TML-PS14F, 2TML-PS14G, 2TML-PS14H

Failure Effect

Failure of any or all of the above pressure switches may not permit auto starting of turbine lift oil pumps 2TML-P6A, B, C, D, E, F, G, and H due to low pump suction pressure. Since these pumps are used only during low turbine RPM or startup condition, failure will not impact normal operation of the plant.

2) 2TML-PS15A, 2TML-PS15B, 2TML-PS15C, 2TML-PS15D, 2TML-PS15E, 2TML-PS15F, 2TML-PS15G, 2TML-PS15H

Failure Effect

Failure of any or all of the above pressure switches may not permit starting of turning gear piggyback motor due to any lift pump oil pressure low. Since this pump is used only during low turbine RPM or startup condition, failure will not impact normal operation of the plant.

k. Turbine Generator Exhaust Hood Spray (TMS, 16-9)

2TMS-TT101, 2TMS-TT102, 2TMS-TY103

Failure Effect

Failure of the above temperature transmitter may cause inadvertent closure of exhaust hood condensate temperature control valve 2CNM-TV121, causing high exhaust hood temperature which can cause high turbine vibration at low load or startup conditions. During normal plant operation (higher loads), no adverse effect occurs whether the temperature control valve is closed or opened.

3. Combined Effect

a. A break in any of the condenser air removal high energy lines in this zone will result in a loss of main condenser vacuum.

This event is bounded by FSAR Section 15.2.5 analyses. As a result of the high energy line break in this zone, control components in this zone or zone AB or zone D may fail, resulting in any or all of the following events:

1) Turbine trip in Zone A and Zone D, an event bounded by FSAR Section 15.2.3 analyses.

2) Loss of main condenser vacuum in Zone A, Zone AB, and Zone D, an event bounded by FSAR Section 15.2.5 analyses.

3) Loss of feedwater heating in 4th and 6th point heaters in Zone A, and 5th and 6th point heaters and second and third point heater drain coolers and in only one of three forth point heaters in Zone D, an event bounded by FSAR Section 15.1.1 analyses.

4) Loss of feedwater flow (Zone D), an event bounded by FSAR Section 15.2.7 analyses.

5) Feedwater controller failure - maximum demand (Zone D), an event bounded by FSAR Section 15.1.2 analyses.

If the turbine trip occurs at a reactor power level elevated from initial operating value due to the loss of feedwater heating, the reactor may experience a change in critical power ratio greater than that described in the unacceptable results of incidents of moderate frequency anticipated operational transients of FSAR Chapter 15. See Section 3.0 for further discussion.

b. A break in any of the auxiliary steam high energy lines in this zone will result in a loss of main condenser vacuum. This event is bounded by FSAR Section 15.2.5 analyses. The failure of control components in this zone or Zones AB or D is described in Item 3.a.

c. 1) A break in the auxiliary condensate high energy line (Item 1.C.1) results in loss of condensate to the third point heaters. This results in loss of feedwater heating in the third point heaters. Loss of feedwater heating is bounded by FSAR Section 15.1.1 analyses. The failure of control components in this zone or Zone AB or Zone D is described in Item 3.a.

2) A break in any of the auxiliary condensate high energy lines (Item 1.C.2 or 1.C.3) will result in a loss of main condenser vacuum, an event bounded by FSAR Section 15.2.5 analyses. The failure of control components in this zone or Zone AB or Zone D is described in Item 3.a.

d. A break in any of the condensate high energy lines in this zone will result in a loss of main condenser vacuum. This event is bounded by FSAR Section 15.2.5 analyses. The failure of control components in this zone or Zone AB or Zone D is described in Item 3.a.

e. 1) A break in the moisture separator vents and drains high energy line (Item 1.e.1) results in a loss of condensate to the fourth point heaters. This results in a loss of feedwater heating in the fourth point heaters. Loss of feedwater heating is bounded by FSAR Section 15.1.1 analyses. For failure of the control components in this zone or Zone AB or Zone D refer to Item 3.a.

2) A break in the moisture separator vents and drains high energy line (Item 1.e.2) results in a loss of condensate vacuum. This event is bounded by FSAR Section 15.2.5 analyses. For failure of the control components in this zone or Zone AB or Zone D refer to the Item 3.a.

f. 1) A break in any of the moisture separator reheater vents and drains high energy lines [Item 1.f.1), 1.f.3), 1.f.4), or 1.f.5)] will result in a loss of main condenser vacuum. This event is bounded by FSAR Section 15.2.5 analyses. The failure of control components in this zone or Zone AB or Zone D is described in Item 3.a.

2) A break in the moisture seperator reheater vents and drains high energy line [Item 1.f.2) or 1.f.6)] results in a loss of condensate to the 6th point heaters. This results in a loss of feedwater heating in the 6th point heaters. Loss of feedwater heating is bounded by FSAR Section 15.1.1 analyses. For failure of the control components in this zone, refer to Item 3.a.

g. A break in any of the turbine building miscellaneous drains high energy lines in this zone will result in a loss of main condenser vacuum. The event is bounded by FSAR Section 15.2.5 analyses. The failure of control components in this zone or Zone AB or Zone D is described in Item 3.a.

h. A break in any of the extraction steam high energy lines in this zone will result in a loss of extraction steam to the third, fourth, fifth or sixth point heater. This results in a loss of feedwater heating in the third, fourth, fifth, or sixth point heater. Loss of feedwater heating is bounded by FSAR Section 15.1.1 analyses. For failure of the control components in this zone or Zone AB or Zone C refer to Item 3.a.

i. A break in any of the feedwater pump recirculation high energy lines in this zone will result in a loss of main condenser vacuum, an event bounded by FSAR Section 15.2.5 analyses. The failure of control components in this zone or Zone AB or Zone D is described in Item 3.a.

j. A break in any of the feedwater high energy lines result in a loss of main condenser vacuum. This event is bounded by FSAR Section 15.2.5 analyses. The failure of control components in this zone or Zone AB or Zone D is described in Item 3.a.

k. 1) A break in any of the low pressure feedwater heater drains high energy lines (Item 1.P.3 or 1.P.4) will result in a loss of condensate and extraction steam to the first and second point heaters. This results in a loss of feedwater heating in the first and second point heaters. Loss of feedwater heating is bounded by FSAR Section 15.1.1 analyses. For failure of the control components in this zone or Zone AB or Zone D refer to Item 3.a.

2) A break in any of the low pressure feedwater heater drains high energy lines (Item 1.P.1 or 1.P.2) will result in a loss of main condenser vacuum. This event is bounded by FSAR Section 15.2.5 analyses. The failure of control components in this zone or Zone AB or Zone D is described in Item 3.a.

l. A break in any of the hot reheat high energy lines result in a loss of main condenser vacuum. This event is bounded by FSAR Section 15.2.5 analyses. The failure of control components in this zone or Zone AB or Zone D is described in Item 3.a.

m. A break in main steam high energy line will result in a loss of main condenser vacuum. This event is bounded by FSAR Section 15.2.5 analyses. The failure of control components in this zone or Zone AB or Zone D is described in Item 3.a.

n. A break in any of the off-gas high energy lines in this zone will result in a loss of off-gas system. This event is bounded by FSAR Section 15.7 analyses. The failure of control components in this zone or Zone AB or Zone D is described in Item 3.a.

o. A break in any of the feedwater relief vents and drains high energy line will result in a loss of main condenser vacuum. This event is bounded by FSAR Section 15.2.5 analyses. The failure of control components is this zone or Zone AB or Zone D is described in Item 3.a.

p. A break in any of the turbine generator gland seal and exhaust high energy lines will result in a loss of main condenser vacuum. This event is bounded by FSAR Section 15.2.5 analyses. The failure of control components in this zone or Zone AB or Zone D is described in Item 3.a.

APPENDIX D

HIGH ENERGY LINE BREAK ANALYSIS

ZONE B

Building: Turbine Building
Elevation: 250'-0", 277'-6", 306'-0"

HELB System		Control System	
ARC (5-1)	Condenser Air Removal	ARC (5-1)	Condenser Air Removal
ASS (3-9)	Auxiliary Steam	ASS (3-9)	Auxiliary Steam
CNA (4-4)	Auxiliary Condensate	CNS (4-3)	Condensate Makeup/Drawoff
CNM (4-1)	Condensate	DSM (32-7)	Moisture Separator Vents and Drains
CNS (4-3)	Condensate Makeup/Drawoff	DSR (32-6)	Moisture Separator RHTR Vents and Drains
DSM (32-7)	Moisture Separator Vents and Drains	DTM (32-5)	Turbine Building Miscellaneous Drains
DSR (32-6)	Moisture Separator RHTR Vents and Drains	FWS (6-1)	Feedwater
DTM (32-5)	Turbine Building Miscellaneous Drains	HDH (6-6)	High Pressure Feedwater Heater Drains
ESS (3-4)	Extraction Steam	HDL (4-2)	Low Pressure Feedwater Heater Drains
HDH (6-6)	High Pressure FDW Heater Drains	MSS (3-1)	Main Steam
HDL (4-2)	Low Pressure FDW Heater Drain	TME (16-1)	Turbine Generator Gland Seal and Exhaust
HVH (22-16)	Hot Water Heating		
MSS (3-1)	Main Steam		
SVH (32-14)	FDW Heater Relief Vents and Drains		

TME (16-1) Turbine Generator Gland Seal and Exhaust

1. The following is a list of high energy lines analyzed on a system basis:

a. Condenser Air Removal (ARC, 5-1)

Line No. 2ARC-025-015-4

Function

Condenser air removal intercondenser 2ARC-E3A and 2ARC-E3B drain to main condenser.

Failure Effect

Loss of main condenser vacuum.

b. Auxiliary Steam (ASS, 3-9)

1) Line Nos. 2ASS-003-26-4, 2ASS-150-512-4, 2ASS-003-211-4, 2ASS-003-201-4, 2ASS-006-125-4, 2ASS-006-126-4, 2ASS-006-1-4

Function

Main steam backup supply to clean steam reboiler and building heating intermediate heat exchangers, main steam supply to condenser air removal system, and off-gas system.

Failure Effect

Loss of main steam supply for condenser air removal, air ejectors, and off-gas preheaters results in loss of condenser vacuum.

2) Line Nos. 2ASS-006-620-4, 2ASS-003-3-4, 2ASS-150-517-4, 2ASS-006-140-4, 2ASS-006-147-4, 2ASS-006-70-4, 2ASS-006-400-4

Function

Steam supply to building heating intermediate heat exchangers.

Failure Effect

Loss of building heating intermediate heat exchangers, additional partial loss of extraction steam at fifth point, and partial loss of condensate heating at fifth point heaters.

3) Line Nos. 2ASS-006-11-4, 2ASS-006-17-4, 2ASS-150-518-4, 2ASS-012-141-4, 2ASS-008-146-4, 2ASS-012-63-4

Function

Steam supply to clean steam reboilers.

Failure Effect

Loss of main source for turbine generator gland seal and exhaust steam. Partial loss of extraction steam at fourth point and partial loss of condensate heating at fourth point heaters.

4) Line Nos. 2ASS-008-503-4, 2ASS-010-504-4, 2ASS-003-502-4

Function

Building heating heat exchangers and clean steam reboilers steam supply header vent lines to main condenser.

Failure Effect

Loss of main condenser vacuum.

c. Auxiliary Condensate (CNA, 4-4)

1) Line Nos. 2CNA-006-52-4, 2CNA-150-19-4, 2CNA-150-21-4

Function

Drain lines from clean steam reboiler drain tank 2CNA-TK1A and building heating intermediate heat exchangers 2HVH-E1A, E1B to main condenser.

Failure Effect

Partial loss of condensate and partial loss of 2HVH-E1A or E1B building heating intermediate heat exchanger.

2) Line Nos. 2CNA-003-303-4, 2CNA-003-304-4

Function

Building heating intermediate heat exchanger relief lines to main condenser.

Failure Effect

Loss of main condenser vacuum.

d. Condensate (CNM, 4-1)

1) Line Nos. 2CNM-002-93-4, 2CNM-002-94-4, 2CNM-002-95-4

Function

Condensate line relief lines to main condenser.

Failure Effect

Loss of main condenser vacuum.

2) Line Nos. 2CNM-012-034-4, 2CNM-012-035-4

Function

Condensate booster pump 2CNM-P2B, P2C recirculation lines.

Failure Effect

Partial loss of condensate inventory and partial loss of condensate flow.

e. Condensate Makeup/Drawoff (CNS, 4-3)

1) Line Nos. 2CNS-006-40-4, 2CNS-003-25-4

Function

Condenser hotwell condensate makeup lines from condensate storage tanks.

Failure Effect

Loss of main condenser vacuum.

2) Line Nos. 2CNS-003-34-4, 2CNS-002-33-4, 2CNS-004-95-4, 2CNS-004-24-4

Function

Condensate supply to condensate makeup and drawoff system, and control rod drive hydraulic system.

Failure Effect

Partial loss of condensate inventory and loss of control rod drive hydraulic system pressure.

f. Moisture Separator Vents and Drains (DSM, 32-7)

1) Line No. 2DSM-006-53-4

Function

Vent line from moisture separator drain receiver 2DSM-TK4A to hot reheat for low-pressure turbine T2A.

Failure Effect

Partial loss of steam supply to low-pressure turbine T2A.

2) Line Nos. 2DSM-012-9-4, 2DSM-012-10-4, 2DSM-012-11-4, 2DSM-012-12-4, 2DSM-012-13-4, 2DSM-012-14-4, 2DSM-012-47-4, 2DSM-016-48-4, 2DSM-018-49-4, 2DSM-020-51-4

Function

Moisture separator reheater 2MSS-E1A drains to MSR drain receiver tank 2DSM-TK1A.

Failure Effect

Loss of condensate from moisture separator 2MSS-E1A to moisture separator drain receiver 2DSM-TK4A and partial loss of condensate/feedwater heating at fourth point heaters. Loss of condensate inventory. Fourth point heater drain pump flow reduced. (The most significant event is the loss of condensate/feedwater heating.)

3) Line Nos. 2DSM-002-16-4, 2DSM-002-18-4, 2DSM-004-17-4

Function

Level instrumentation standpipe and process connections for 2DSM-TK4A.

Failure Effect

Loss of moisture separator drain receiver tank 2DSM-TK4A condensate, and partial loss of steam to low-pressure turbines. Partial loss of condensate/feedwater heating at fourth point heaters. Fourth point heater drain pump flow is reduced. (The most significant event is the loss of condensate/feedwater heating.)

4) Line No. 2DSM-016-1-4

Function

Provides condensate from moisture separator drain receiver 2DSM-TK4A to third point heaters.

Failure Effect

Partial loss of condensate/feedwater heating at fourth point heaters. Heater drain pump flow is reduced, which is not significant.

5) Line No. 2DSM-016-8-4

Function

Provides path to main condenser from moisture separator drain receiver 2DSM-TK4A.

Failure Effect

Loss of main condenser vacuum.

6) Line No. 2DSM-016-7-4

Function

Provides path to main condenser from moisture separator drain receiver 2DSM-TK4A.

Failure Effect

Loss of condensate from moisture separator drain receiver 2DSM-TK4A, partial loss of main steam to condenser, and partial loss of condensate/feedwater heating at fourth point heaters. Heater drain pump flow is reduced. (The most significant event is the loss of condensate/feedwater heating.)

g. Moisture Separator RHTR Vents and Drains (DSR, 32-6)

1) Line Nos. 2DSR-002-11-4, 2DSR-002-13-4, 2DSR-004-12-4

Function

Level instrumentation standpipe and process connections for reheater drain receiver tank 2DSR-TK6A.

Failure Effect

Loss of 2DSR-TK6A condensate and steam resulting in partial loss of feedwater heating at sixth point heaters.

2) Line No. 2DSR-016-8-4

Function

Provide path to main condenser from moisture separator reheater drain receiver 2DSR-TK6A.

Failure Effect

Loss of main condenser vacuum.

3) Line No. 2DSR-016-1-4

Function

Condensate from reheater drain receiver 2DSR-TK6A to sixth point heaters.

Failure Effect

Loss of condensate to sixth point heaters and loss of steam from reheater moisture separator 2MSS-E1A resulting in partial loss of feedwater heating at sixth point heaters.

4) Line Nos. 2DSR-002-120-4, 2DSR-006-10-4, 2DSR-006-102-4, 2DSR-008-104-4

Function

Scavenging steam supply header from moisture separator 2MSS-E1A to sixth point heater.

Failure Effect

Loss of moisture separator reheat steam and partial loss of feedwater/condensate heating at sixth point heater.

5) Line No. 1DSR-024-9-4

Function

Condensate from reheater moisture separator 2MSS-E1A to reheater drain receiver 2DSR-TK6A.

Failure Effect

Loss of condensate from 2MSS-E1A to 2DSR-TK6A and loss of condensate and steam to sixth point heater resulting in partial loss of feedwater heating at sixth point heaters.

6) Line Nos. 2DSR-016-7-4

Function

Provide path to main condenser from moisture separator reheater drain receiver 2DSR-TK6A or 2DSR-TK6B.

Failure Effect

Loss of condensate from reheater drain receiver 2DSR-TK6A and loss of steam from reheater moisture separator 2MSS-E1A resulting in partial loss of feedwater heating at sixth point heaters.

h. Turbine Building Miscellaneous Drains (DTM, 32-5)

1) Line Nos. 2DTM-025-170-4, 2DTM-025-177-4, 2DTM-025-176-4

Function

Combined intermediate valves steam leakoff drain path to main condenser.

Failure Effect

Loss of main condenser vacuum.

2) Line Nos. 2DTM-002-14-4, 2DTM-002-15-4

Function

2ESS-MOV22A, B, upstream drains to main condenser.

Failure Effect

Partial loss of extraction steam from fourth point heater extraction lines and partial loss of heating at fourth point heaters.

3) Line Nos. 2DTM-002-69-4, 2DTM-002-70-4, 2DTM-002-71-4, and 2DTM-002-72-4

Function

Cold reheat line drains.

Failure Effect

Loss of main condenser vacuum.

4) Line Nos. 2DTM-150-64-4, 2DTM-150-65-4, 2DTM-150-111-4, 2DTM-150-185-4, 2DTM-150-186-4, 2DTM-002-337-4, 2DTM-002-339-4, 2DTM-002-341-4

Function

Drain lines to main condenser.

Failure Effect

Loss of main condenser vacuum.

5) Line Nos. 2DTM-150-231-4 through 2DTM-150-236-4

Function

Turbine exhaust hood bearing cones waste, water, and oil drains.

Failure Effect

No effect.

6) Line Nos. 2DTM-002-28-4, 2DTM-002-29-4, 2DTM-002-30-4, 2DTM-002-61-4, 2DTM-002-62-4, 2DTM-002-63-4, 2DTM-003-27-4, 2DTM-003-60-4

Function

Fifth and sixth point extraction header drain lines to main condenser.

Failure Effect

Partial loss of extraction steam from fifth or sixth point heater extraction lines and partial loss of heating at fifth or sixth point heaters.

7) Line Nos. 2DTM-002-457-4 through 2DTM-002-462-4, 2DTM-003-344-4, 2DTM-003-422-4, 2DTM-004-407-4, 2DTM-004-420-4, 2DTM-004-471-4, 2DTM-004-519-4, 2DTM-006-417-4, 2DTM-008-414-4, 2DTM-016-464-4, 2DTM-018-463-4, 2DTM-020-10-4, 2DTM-150-41-4, 2DTM-150-56-4 through 2DTM-150-59-4, 2DTM-150-135-4, 2DTM-150-343-4, 2DTM-150-400-4, 2DTM-150-403-4, 2DTM-150-405-4, 2DTM-150-412-4, 2DTM-150-415-4, 2DTM-150-473-4, 2DTM-150-479-4, 2DTM-150-480-4, 2DTM-150-499-4, 2DTM-150-520-4, 2DTM-150-487-4, 2DTM-150-515-4, 2DTM-150-516-4

Function

Drain lines to main condenser.

Failure Effect

Loss of main condenser vacuum.

8) Line Nos. 2DTM-150-139-4, 2DTM-150-140-4, 2DTM-150-214-4

Function

Auxiliary steam low point drains.

Failure Effect

Partial loss of fourth or fifth point extraction steam and partial loss of fourth or fifth point feedwater heating.

9) Line Nos. 2DTM-150-513-4 and 2DTM-150-514-4

Function

Low point drains from clean reboiler auxiliary steam supply header to main condenser.

Failure Effect

Partial loss of fourth point extraction steam and partial loss of fourth point feedwater heating.

i. Extraction Steam (ESS, 3-4)

Line No. 2ESS-006-251-4

Function

Extraction steam to auxiliary steam system.

Failure Effect

Partial loss of fifth point extraction steam and loss of fifth point feedwater heating.

j. High Pressure FDW Heater Drains (HDH, 6-6)

1) Line Nos. 2HDH-014-604-4, 2HDH-014-614-4, 2HDH-014-624-4

Function

Sixth point heater high level drain lines to main condenser.

Failure Effect

Loss of main condenser vacuum.

2) Line Nos. 2HDH-014-603-4, 2HDH-014-613-4, 2HDH-014-623-4

Function

Sixth point heater high level drain lines to main condenser.

Failure Effect

Partial loss of sixth point heating and partial loss of condensate.

k. Low Pressure FDW Heater Drain (HDL, 4-2)

1) Line Nos. 2HDL-002-413-4, 2HDL-002-433-4, 2HDL-002-453-4, 2HDL-006-134-4, 2HDL-006-135-4, 2HDL-006-136-4, 2HDL-008-102-4, 2HDL-008-112-4, 2HDL-008-122-4, 2HDL-014-101-4, 2HDL-014-111-4, 2HDL-014-121-4, 2HDL-008-235-4, 2HDL-008-303-4, 2HDL-018-403-4, 2HDL-018-423-4, 2HDL-018-443-4, 2HDL-016-504-4, 2HDL-016-514-4, 2HDL-016-524-4

Function

Low pressure heater drains to condenser.

Failure Effect

Loss of Main condenser vacuum.

2) Line Nos. 2HDL-008-202-4, 2HDL-008-203-4, 2HDL-008-212-4, 2HDL-008-213-4, 2HDL-008-223-4, 2HDL-008-205-4, 2HDL-008-215-4, 2HDL-008-225-4

Function

Second point heater drain receivers drain lines to condenser.

Failure Effect

Partial loss of second point feedwater heating and partial loss of condensate.

3) Line Nos. 2HDL-008-302-4, 2HDL-008-312-4, 2HDL-008-322-4, 2HDL-008-304-4, 2HDL-008-314-4, 2HDL-008-324-4, 2HDL-018-402-4, 2HDL-018-422-4, 2HDL-018-442-4, 2HDL-016-503-4, 2HDL-016-513-4, 2HDL-016-523-4

Function

Heater drains to main condenser.

Failure Effect

Partial loss of feedwater heating and partial loss of condensate.

l. Hot Water Heating (HVH, 22-16)

1) Line No. 2HVH-006-023-4

Function

Hot water supply to turbine building glycol heat exchanger.

Failure Effect

No significant effect.

2) Line No. 2HVH-006-24-4

Function

Hot water supply to radwaste building glycol heat exchanger.

Failure Effect

No significant effect.

m. Main Steam (MSS, 3-1)

1) Line Nos. 2MSS-002-147-4, 2MSS-002-148-4, 2MSS-150-252-4, 2MSS-150-257-4, 2MSS-150-251-4, 2MSS-150-258-4, 2MSS-002-177-4, 2MSS-002-178-4, 2MSS-002-180-4, 2MSS-002-181-4

Function

Main steam drain lines to main condenser.

Failure Effect

Loss of main condenser vacuum and partial loss of main steam.

2) Line Nos. 2MSS-016-26-4, 2MSS-018-10-4, 2MSS-018-34-4, 2MSS-028-6-4, 2MSS-028-8-4

Function

Main steam supply to moisture separator 2MSS-E1B, main steam chest bypass, and turbine main steam stop valves.

Failure Effect

Loss of main steam to turbine generator.

n. FDW Heater Relief Vents and Drains (SVH, 32-14)

Line Nos. 2SVH-002-101-4, 2SVH-002-161-4, 2SVH-002-201-4, 2SVH-002-231-4, 2SVH-002-261-4, 2SVH-003-202-4, 2SVH-003-232-4, 2SVH-003-262-4, 2SVH-002-302-4, 2SVH-002-332-4, 2SVH-002-362-4, 2SVH-002-402-4, 2SVH-002-407-4, 2SVH-002-432-4, 2SVH-002-437-4, 2SVH-002-462-4, 2SVH-002-467-4, 2SVH-003-307-4, 2SVH-003-337-4, 2SVH-003-367-4, 2SVH-010-902-4, 2SVH-010-932-4, 2SVH-010-962-4, 2SVH-004-992-4, 2SVH-004-993-4, 2SVH-004-994-4, 2SVH-006-995-4, 2SVH-002-991-4

Function

Feedwater heater drains to condenser.

Failure Effect

Loss of main condenser vacuum.

o. Turbine Generator Gland Seal and Exhaust (TME, 16-1)

1) Line Nos. 2TME-003-078-4, 2TME-003-080-4, 2TME-006-079-4, 2TME-012-077-4, 2TME-008-075-4, 2TME-008-084-4, 2TME-008-085-4, 2TME-012-418-4

Function

Turbine generator gland seal and exhaust steam vents and drains to main condenser.

Failure Effect

Loss of main condenser vacuum.

2) Line No. 2TME-004-413-4

Function

Main steam backup supply to turbine generator gland seal and exhaust steam.

Failure Effect

Partial loss of main steam.

2. The following is the list of nonsafety-related control components that are affected by a high energy line break on any of the lines listed in Item 1. The consequence of failure of each control component is analyzed. Refer to Appendix B for the function of individual components.

Additionally, a high energy line break in this zone will also result in failure of control components in Zones C and D. The significant consequences of such a failure have been integrated into the analysis by referring to the appropriate "Failure Effect" from the above listed zones(s) in the "Combined Effect" section of this zone.

a. Condenser Air Removal (ARC, 5-1)

2ARC-HV25A, 2ARC-SOV25A, 2ARC-HV26A, 2ARC-SOV26A, 2ARC-HV25B, 2ARC-SOV25B, 2ARC-HV26B, 2ARC-SOV26B, 2ARC-HV25C, 2ARC-SOV25C, 2ARC-HV26C, 2ARC-SOV26C

Failure Effect

Failure of any or all of these devices in the close position may result in a partial or total loss of condenser vacuum.

b. Auxiliary Steam (ASS, 3-9)

1) 2ASS-PV106, 2ASS-SOV106, 2ASS-STV143, 2ASS-SOV143

Failure Effect

Failure of these valves in either the open or close position has no significant effect.

2) 2ASS-STV112, 2ASS-SOV112, 2ASS-PV113, 2ASS-SOV113

Failure Effect

Failure of either of these valves in the close position will stop the supply of main steam to the clean steam reboilers, 2TME-E1A and 2TME-E1B. Extraction steam from the fourth point extraction will normally supply the reboilers. Auxiliary steam can also supply the clean steam reboilers. Loss of all these sources results in loss of turbine generator gland seal steam and subsequent gradual reduction in condenser vacuum.

3) 2ASS-AOV144, 2ASS-SOV144

Failure Effect

Failure of the above AOV in either open or close postion has no significant impact.

c. Condensate Makeup/Drawoff (CNS, 4-3)

2CNS-LT103, 2CNS-AOV304, 2CNS-SOV304, 2CNS-LS104, 2CNS-LT105, 2CNS-LV105.

Failure Effect

Failure of 2CNS-LT103, 2CNS-LS104, and 2CNS-LT105 which causes closure of 2CNS-LV103, 2CNS-AOV304 and opening of 2CNS-LV105 will result in loss of condensate inventory in the condenser hotwell, 2CNM-CND1A. This loss of inventory will eventually result in loss of feedwater flow to the reactor.

d. Moisture Separator Vents and Drains (DSM, 32-7)

2DSM-LS78A, 2DSM-LV78A, 2DSM-SOV78A

Failure Effect

Failure of any device in this control loop which causes 2DSM-LV78A to fail open will result in partial loss of feedwater heating at the fourth point heaters 2CNM-E4A, 2CNM-E4B, and 2CNM-E4C. Failure which causes valve 2DSM-LV78A to fail close will result in a high condensate level in 2DSM-TK4A.

e. Moisture Separator Reheater Vents and Drains (DSR, 32-6)

1) 2DSR-LS67A

Failure Effect

Failure of this device which causes 2MSS-AOV92A to fail closed results in loss of main steam to moisture separator, 2MSS-E1A, with subsequent reduction in turbine efficiency. Operation of the turbine with only one moisture separator on-line may result in turbine vibration due to unbalanced steam flow and turbine trip due to high vibration.

2) 2DSR-LS68A, 2DSR-LV68A, 2DSR-SOVX68A, 2DSR-SOV68A

Failure Effect

Failure of any device in this control loop which causes 2DSR-LV68A to fail open will drain 2DSR-TK1A to the main condenser. This condition reduces heating in the sixth point heaters 2FWS-E6A, 2FWS-E6B, and 2FWS-E6C.

3) 2DSR-AOV83A, 2DSR-SOV83A, 2DSR-AOV84A, 2DSR-SOV84A

Failure of the scavenging steam warming and isolation valves in closed position may result in partial loss of feedwater heating and sixth point heater.

f. Turbine Plant Miscellaneous Drains (DTM, 32-5)

1) 2DTM-AOV2A, 2DTM-AOV2B, 2DTM-AOV2C
2DTM-SOV2A, 2DTM-SOV2B, 2DTM-SOV2C
2DTM-AOV8A, 2DTM-AOV8B, 2DTM-AOV8C
2DTM-SOV8A, 2DTM-SOV8B, 2DTM-SOV8C

Failure Effect

Failure of any or all of the above AOVs in the open position results in a small loss of 5th or 6th point extraction steam and associated feedwater heating. This failure may have an insignificant effect on condenser vacuum.

2) 2DTM-AOV3A, 2DTM-AOV3B, 2DTM-AOV3C, 2DTM-SOV3A, 2DTM-SOV3B, 2DTM-SOV3C

Failure Effect

Failure of the above AOVs in the open position results in a small decrease in fourth point extraction steam flow and associated feedwater heating. An insignificant decrease in condenser vacuum may also result.

3) 2DTM-AOV4A, 2DTM-AOV4B, 2DTM-AOV119, 2DTM-SOV4A, 2DTM-SOV4B, 2DTM-SOV119, 2DTM-AOV144, 2DTM-AOV157, 2DTM-SOV144, 2DTM-SOV157.

Failure Effect

Failure of any or all of the above AOVs in the open position results in a small decrease of extraction steam. No significant impact will result.

4) 2DTM-AOV104, 2DTM-AOV105, 2DTM-SOV104, 2DTM-SOV105

Failure Effect

Failure of the above AOVs in the open position may cause water induction to the H.P. turbine.

5) 2DTM-AOV7A, 2DTM-AOV7B, 2DTM-AOV107
2DTM-SOV7A, 2DTM-SOV7B, 2DTM-SOV107
2DTM-AOV106, 2DTM-AOV126, 2DTM-AOV127
2DTM-SOV106, 2DTM-SOV126, 2DTM-SOV127
2DTM-AOV128, 2DTM-AOV108, 2DTM-AOV144
2DTM-SOV128, 2DTM-SOV108, 2DTM-SOV144
2DTM-AOV6A, 2DTM-AOV6B, 2DTM-AOV30A
2DTM-SOV6A, 2DTM-SOV6B, 2DTM-SOV30A
2DTM-AOV30B, 2DTM-AOV31A, 2DTM-AOV31B
2DTM-SOV30B, 2DTM-SOV31A, 2DTM-SOV31B
2DTM-AOV142, 2DTM-SOV142

Failure Effect

Failure of any or all of the above AOVs in either open or close position has no significant impact.

g. Feedwater (FWS, 6-1)

2FWS-LV55B (C33-F002B)

Failure Effect

This valve is normally closed. If the valve is to open, there will be no effect since the feedwater control system would close 2FWS-LV10B (C33-F001B) to maintain proper flow.

h. High Pressure Feedwater Heater Drains (HDH, 6-6)

2HDH-LV26A, 2HDH-LV26B, 2HDH-LV26C, 2HDH-SOV26A, 2HDH-SOV26B, 2HDH-SOV26C.

Failure Effect

Failure of any or all of the above AOVs in the open position will result in a decrease in sixth point feedwater heater level and a partial reduction in feedwater heating.

i. Low Pressure Feedwater Heater Drains (HDL, 4-2)

1) 2HDL-LV2A, 2HDL-LV2B, 2HDL-LV2C
2HDL-LV3A, 2HDL-LV3B, 2HDL-LV3C

Failure Effect

Failure of any or all of the above valves in the close position will result in a reduction in feedwater heating in low pressure feedwater heaters, 2CNM-E2A, 2CNM-E2B, 2CNM-E2C, 2CNM-E3A, 2CNM-E3B, 2CNM-E3C.

2) 2HDL-LV22A, 2HDL-LV22B, 2HDL-LV22C, 2HDL-SOV22A, 2HDL-SOV22B, 2HDL-SOV22C.

Failure Effect

Failure of any or all of the above level control valves in the open position will drain the associated heater drain receiver tanks, 2HDL-TK2A, 2HDL-TK2B, 2HDL-TK2C, to the condenser.

Failure of any or all of the above level control valves in the close position will stop the flow of backup water to the heater drain receiver tanks with a consequent reduction or loss of feedwater heating.

3) 2HDL-LV24A, 2HDL-LV24B, 2HDL-LV24C, 2HDL-SOV24A, 2HDL-SOV24B, 2HDL-SOV24C

Failure Effect

Failure of any or all of the above level control valves in the open or close position will result in reduction or loss of heating in the fourth point low pressure feedwater heaters 2CNM-E4A, 2CNM-E4B, 2CNM-E4C.

4) 2HDL-LV23A, 2HDL-LV23B, 2HDL-LV23C, 2HDL-SOV23A, 2HDL-SOV23B, 2HDL-SOV23C

Failure Effect

Failure of any or all of the above level control valves in the close position will result in reduction of feedwater heating in the third point heaters, 2CNM-E3A, 2CNM-E3B, 2CNM-E3C.

5) 2HDL-LV25A, 2HDL-LV25B, 2HDL-LV25C, 2HDL-SOV25A, 2HDL-SOV25B, 2HDL-SOV25C

Failure Effect

Failure of any or all of the above level control valves in the open or close position will result in reduction or loss of heating in the fifth point low pressure feedwater heaters 2CNM-E5A, 2CNM-E5B, 2CNM-E5C.

j. Main Steam (MSS, 3-1)

1) 2MSS-AOV10B, 2MSS-SOV10B, 2MSS-AOV10D, 2MSS-SOV10D

Failure Effect

These valves are normally closed. Failure of these valves in the open position will have no significant effect.

2) 2MSS-I/P22A, 2MSS-PV28A, 2MSS-PV29A

Failure Effect

Device failure causing inadvertent closure of moisture separator main steam supply valve, 2MSS-PV28A or 2MSS-PV29A, which can result in reduction of hot reheat steam temperature to low-pressure turbines.

3) 2MSS-AOV92A, 2MSS-SOV92A

Failure Effect

If this valve fails closed, main steam supply to moisture separator reheater 2MSS-E1B will be shut off. This will

cause poor quality reheat steam to the low pressure turbines, which may lead to turbine vibrations and trip.

4) 2MSS-AOV180, 2MSS-SOV180

Failure Effect

Failure of this device in the open or closed position has no significant effect.

k. Turbine Generator Gland Seal and Exhaust (TME, 16-1)

2TME-AOV130, 2TME-SOV130

Failure Effect

This AOV is a 1/4 inch valve. Failure of this AOV in the open position will cause draining of the gland exhaust cooler drain receiver tank to the condenser. There is no significant impact on reactor parameters.

3. Combined Effect

a. A break in the condenser air removal high energy line in this zone will result in loss of main condenser vacuum and reactor trip. This event is bounded by FSAR Section 15.2.5 analyses. Failure of control components in this zone or in Zones C or D does not exacerbate this event.

b.1. A break in the auxiliary steam high energy line in this zone (Items 1.b.1, 1.b.4) will result in a loss of main condenser vacuum and reactor trip. This event is bounded by FSAR Section 15.2.5 analyses. Failure of control components in this zone or in Zones C or D does not exacerbate this event.

b.2. A break in the auxiliary steam high energy line in this zone (Items 1.b.2, 1.b.3) results in loss of extraction steam at fourth point or fifth point heaters causing loss of feedwater heating. Loss of feedwater heating is bounded by FSAR Section 15.1.1 analyses.

Failure of control component in this zone (Items 2.d, 2.e.2, 2.e.3, 2.f.1, 2.f.2, 2.h, 2.i.1 through 2.i.5) may also result in further partial loss of feedwater heating to the second through sixth point heaters of as many as three feedwater heating strings. This event is bounded by FSAR Section 15.1.1 analyses.

Additionally, failure of control components in this zone (Item 1.e.1) may result in turbine trip due to unbalanced steam flow and high vibration. If turbine trip occurs at a reactor power level elevated from the initial operating value due to

the loss of feedwater heating, the reactor may experience a change in critical power ratio greater than that described in the unacceptable results of incidents of moderate frequency (anticipated operational transients) of FSAR Section 15.1.1.

Failure of control components in Zones C or D may result in any of the following: Loss of feedwater flow to the reactor, bounded by FSAR Section 15.2.7 analyses; partial loss of feedwater heating bounded by FSAR Section 15.1.1 analyses; a turbine trip bounded by FSAR Section 15.2.3 analyses; loss of main condenser vacuum bounded by FSAR Section 15.2.5; or feedwater controller failure maximum demand, bounded by FSAR Section 15.1.2 analyses. For detailed discussions concerning these control component failures, refer to Appendix D, Zones C or D, Item 3.

c.1. A break in the auxiliary condensate high energy line in this zone (Item 1.c.1) will result in partial loss of feedwater heating. This event is bounded by FSAR Section 15.1.1 analyses. Failure of control components in this zone and in Zones C and D is analyzed in Item 3.b.2 above.

c.2. A break in the auxiliary condensate high energy line in this zone (Item 1.c.2) will result in loss of main condenser vacuum. This event is bounded by FSAR Section 15.2.5 analyses. Refer to Item 3.b.2 above for analyses of control component failures in this zone and in Zones C and D.

d.1. A break in the condensate high energy line in this zone (Item 1.d.1) will result in loss of main condenser vacuum. This event is bounded by FSAR Section 15.2.5 analyses. Refer to Item 3.b.2 for analysis of control component failures in this zone and in Zones C and D.

d.2. A break in the condensate high energy line in this zone (Item 1.d.2) will result in a loss of condensate inventory and a partial or total loss of feedwater flow. This will ultimately lead to reactor scram on low reactor vessel level. This event is bounded by FSAR Section 15.2.7 analyses or 15.6.6 analyses, depending on the extent of the loss of feedwater event.

Failure of control components in this zone may result in partial loss of feedwater heating. If this occurs before the reactor scram occurs due to loss of feedwater, the analysis of this event is as presented in Item 3.b.2 above. Failure of control components in Zones C and D is also discussed in Item 3.b.2.

e.1. A break in the condensate makeup and drawoff high energy lines in this zone (Item 1.e.1) will result in a loss of main condenser vacuum. This event is bounded by FSAR Section 15.2.5 analyses. Control component failures in this zone or in Zones C or D do not exacerbate this event.

e.2. A break in the condensate makeup and drawoff high energy lines in this zone (Item 1.e.2) will result in loss of control rod drive cooling water supply and loss of operator ability to control rods manually. Loss of rod drive cooling water will result in no immediate significant effects; over the long term, some deterioration of control rod mechanism seals may occur. If the reactor is in automatic control, loss of ability to manually move control rods will have no immediate effect. Ultimately, other effects which change reactivity will drive the automatic control system out of range and the reactor will experience slowly decreasing or increasing reactor temperature and steam pressure, depending on other reactivity changes occurring. If the reactor is in manual control, no compensation for reactivity changes will be available from the automatic control system. In the absence of any other effects, loss of control rod drive supply water will be annunciated and due to the long-term nature of the effects of this event, sufficient time will be available for the operator to initiate a manual reactor scram. However, the loss of condensate inventory may result in low hotwell level, which will ultimately cause loss of condensate pump suction pressure leading to loss of feedwater. This event is bounded by FSAR Section 15.6.6.

Failure of control system components in this zone or in Zones C or D can cause a partial loss of feedwater heating. For this event, the analysis presented in Item 3.b.2 above provides a description of failure effect.

f.1. A break in the moisture separator vents and drains high energy lines in this zone (Items 1.f.2, 1.f.3, 1.f.4, and 1.f.6) will cause a partial loss of feedwater heating at the third and fourth point feedwater heaters. This event is bounded by FSAR Section 15.1.1 analyses. Effects of control component failures in this zone or in Zones C and D are presented in Item 3.b.2.

f.2. A break in the moisture separator vents and drains high energy lines in this zone (Item 3.f.5) will result in a loss of main condenser vacuum. This event is bounded by FSAR Section 15.2.5 analyses. Failure of control components in this zone or in Zones C and D does not exacerbate this event.

f.3. A break in moisture separator vents and drains high energy lines in this zone (Item 1.f.1) will cause a loss of hot reheat steam to the associated low pressure turbine, causing unbalanced steam temperatures resulting in asymmetrical operation. This will lead to high vibration and turbine trip. This event is bounded by FSAR Section 15.2.3 analyses. Effects of control component failures are analyzed in Item 3.b.2.

g.1. A break in the moisture separator reheater vent and drain high energy lines in this zone (Items 1.g.1, 1.g.3, 1.g.4, 1.g.5, and 1.g.6) will result in a partial loss of feedwater heating

to the sixth point feedwater heaters. This event is bounded by FSAR Section 15.1.1 analyses. Failure of control components in this zone or Zones C or D is analyzed in Item 3.b.2 above.

g.2. A break in the moisture separator reheater vent and drain high energy lines in this zone (Item 1.g.2) will result in a loss of main condenser vacuum and reactor trip. This event is bounded by FSAR Section 15.2.5 analyses. Failure of control components in this zone or Zones C or D does not exacerbate this event.

h.1. A break in turbine building miscellaneous drains high energy line in this zone (Items 1.h.2, 1.h.6, 1.h.8, and 1.h.9) will result in loss of feedwater heating at fourth, fifth, or sixth point heaters. Loss of feedwater heating is bounded by FSAR Section 15.1.1 analyses. Control component failure analyses is discussed in Item 3.b.2.

h.2. A break in turbine building miscellaneous drains high energy lines (Items 1.h.1, 1.h.7) will result in loss of main condenser vacuum and reactor trip. This event is bounded by FSAR Section 15.2.5 analyses. Failure of control components in this zone or in Zones C and D does not exacerbate this event.

h.3. A break in turbine building miscellaneous drains high energy line (Items 1.h.3, 1.h.4) will result in loss of main condenser vacuum bounded by FSAR Section 15.2.5 analyses. For control component failure analyses refer to Item 3.b.2.

h.4 A break in turbine building miscellaneous drains high energy line (Item 1.h.5) in this zone has no significant effect. Refer to Item 3.b.2 for control component failure effect.

i. A break in extraction steam high energy line in this zone will result in loss of feedwater heating to the fifth point heater bounded by FSAR Section 15.1.1 analyses. Refer to Item 3.b.2 for control component failure analyses.

j.1. A break in high pressure feedwater heater drains high energy lines in this zone (Item 1.j.1) results in loss of main condenser vacuum bounded by FSAR Section 15.2.5 analyses. Control component failure in this zone or in Zones C or D does not exacerbate this event.

j.2. A break in high pressure feedwater heater drains high energy lines in this zone (Item 1.j.2) results in partial loss of heating at sixth point heater bounded by FSAR Section 15.1.1 analyses. For control component failure analyses refer to Item 3.b.2 above.

k.1. A break in the low pressure FDW heater drains high energy lines in this zone (Item 1.k.1) will result in loss of main condenser vacuum bounded by FSAR Section 15.2.5 analyses. Control component failure does not exacerbate this event.

k.2. A break in the low pressure FDW heater drains high energy lines in this zone (Items 1.k.2 and 1.k.3) will result in loss of feedwater heating bounded by FSAR Section 15.1.1 analyses. Refer to Item 3.b.2 for control component failure.

l. A break in hot water heating system high energy line in this zone (Items 1.1.1, 1.1.2) has no significant effect on the reactor parameters. Refer to Item 3.b.2 for control component failure analyses.

m.1. A break in main steam high energy lines (Item 1.m.1) will result in loss of main condenser vacuum bounded by FSAR Section 15.2.5 analyses. Refer to Item 3.b.2 for control component failure analyses.

m.2. A break in the main steam high energy lines in this zone (Item 1.m.2) will result in a loss of main steam. This event results in closure of main steam isolation valves due to high steam flow and reactor scram. The event is bounded by FSAR Section 15.6.4 analyses. Failure of control components in this zone or in Zones C or D does not exacerbate this event.

n. A break in FDW heater relief vents and drains high energy line in this zone results in loss of main condenser vacuum bounded by FSAR Section 15.2.5 analyses. Refer to Item 3.b.2 for control component failure analyses.

o.1. A break in turbine generator gland seal and exhaust steam high energy line in this zone (Item 1.o.1) results in loss of main condenser vacuum bounded by FSAR Section 15.2.5 analyses. Failure of control components does not exacerbate this event.

o.2 A break in the turbine generator gland seal and exhaust high energy line in this zone results in a partial loss of main steam. This event may result in main steam isolation valve closure and reactor trip. This event is bounded by FSAR Section 15.6.4 analyses. If main steam isolation valve closure does not occur, this event will result in a partial loss of main steam. If the line cannot be isolated, the line break will not significantly affect reactor parameters. Eventually, however, the presence of steam will affect control components in this zone or in Zones C or D. Refer to Item 3.b.2 for control component failure analyses.

APPENDIX D

HIGH ENERGY LINE BREAK ANALYSIS

ZONE C

Building: Turbine Building
Locations: El 277 ft 0 in.
El 306 ft 0 in.

HELB System		Control System	
ARC (5-1)	Condenser Air Removal	ARC (5-1)	Condenser Air Removal
ASS (3-9)	Auxiliary Steam	ASS (3-9)	Auxiliary Steam
CNA (4-4)	Auxiliary Condensate	CNM (4-1)	Condensate
CNM (4-1)	Condensate	DSM (32-7)	Moisture Separator Vents and Drains
DSM (32-7)	Moisture Separator Vents and Drains	DSR (32-6)	Moisture Separator Reheater Vents and Drains
DSR (32-6)	Moisture Separator Reheater Vents and Drains	ESS (3-4)	Extraction Steam
DTM (32-5)	Turbine Building Miscellaneous Drains	FWR (6-3)	Feedwater Pump Recirculation
ESS (3-4)	Extraction Steam	FWS (6-1)	Feedwater
FWR (6-3)	Feedwater Pump Recirculation	HDL (4-2)	Low Pressure Feedwater Heater Drains
FWS (6-1)	Feedwater	MSS (3-1)	Main Steam
HDL (4-2)	Low Pressure Feedwater Heater Drains	TME (16-1)	Turbine Generator Gland Seal and Exhaust
MSS (3-1)	Main Steam		
SVH (32-14)	Feedwater Heater Relief Drains and Vents		
TME (16-1)	Turbine Generator Gland Seal and Exhaust		

1. The following is a list of high energy lines analyzed on a system basis:

a. Condenser Air Removal (ARC, 5-1)

Line Nos. 2ARC-010-607-4 and 2ARC-010-608-4

Function:

Condenser Air Removal Intercondensers 2ARC-E3A and 2ARC-E3B shell safety valve discharge lines to main condenser.

Failure Effect:

Loss of condenser vacuum.

b. Auxiliary Steam (ASS, 3-9)

1) Line Nos.: 2ASS-010-80-4, 2ASS-010-81-4, 2ASS-006-82-4, 2ASS-008-83-4

Function:

Auxiliary steam supply lines to clean steam reboilers.

Failure Effect:

Loss of auxiliary steam supply as backup source of heating for clean steam reboilers 2TME-E1A and E1B.

2) Line Nos.: 2ASS-010-84-4, 2ASS-016-13-4, 2ASS-016-14-4, 2ASS-150-71-4, 2ASS-150-72-4, 2ASS-012-063-4

Function:

Steam supply line to clean steam reboilers.

Failure Effect:

Loss of main source for turbine generator gland seal and exhaust steam. Partial loss of extraction steam at fourth point heaters, when extraction steam is normal source of heating for clean steam reboilers (likewise main steam or auxiliary steam when heating is from one of the two sources).

3) Line Nos.: 2ASS-003-502-4, 2ASS-010-520-4

Function:

Building heating heat exchangers and clean steam reboilers steam supply header vent lines to main condenser.

Failure Effect:

Loss of main condenser vacuum.

4) Line No.: 2ASS-006-126-4

Function:

Main steam backup supply to condenser air removal system and off-gas system.

Failure Effect:

Partial loss of main steam and loss of backup supply steam to clean steam reboilers, building heating intermediate heat exchangers, condenser air removal system and off-gas system.

c. Auxiliary Condensate (CNA, 4-4)

1) Line Nos.: 2CNA-006-8-4, 2CNA-006-2-4, 2CNA-003-318-4, 2CNA-003-414-4, 2CNA-003-415-4

Function:

Carry condensate from reboiler drain tanks 2CNA-TK1A, TK1B to third point heater.

Failure Effect:

Partial loss of condensate and partial loss of condensate heating at third point heater.

2) Line Nos.: 2CNA-006-18-4, 2CNA-006-52-4

Function:

Drain lines from clean steam reboiler drain tank 2CNA-TK1A, TK1B to main condenser.

Failure Effect:

Partial loss of condensate and condensate heating at third point heater.

3) Line Nos.: 2CNA-150-006-4, 2CNA-150-056-4

Function:

Clean steam reboilers vent lines to main condenser.

Failure Effect:

Loss of main condenser vacuum.

d. Condensate (CNM, 4-1)

1) Line Nos.: 2CNM-018-47-4, 2CNM-018-50-4, 2CNM-018-53-4

Function:

Carry condensate/feedwater from third point drain cooler 2CNM-DCL3A to first point heater 2CNM-E1A, to second point heater 2CNM-E2A to third point heater 2CNM-E3A.

Failure Effect:

Loss of condensate/feedwater from heater train A.

2) Line Nos.: 2CNM-018-48-4, 2CNM-018-51-4, 2CNM-018-54-4

Function:

Carry condensate/feedwater from third point drain cooler 2CNM-DCL3B to first point heater 2CNM-E1B, to second point heater 2CNM-E2B to third point heater 2CNM-E3B.

Failure Effect:

Loss of condensate/feedwater from heater train B.

3) Line Nos.: 2CNM-018-49-4, 2CNM-018-52-4, 2CNM-018-55-4

Function:

Carry condensate/feedwater from third point drain cooler 2CNM-DCL3C to first point heater 2CNM-E1C, to second point heater 2CNM-E2C to third point heater 2CNM-E3C.

Failure Effect:

Loss of condensate/feedwater from heater, train C.

4) Line Nos.: 2CNM-004-318-4, 2CNM-004-319-4, 2CNM-004-320-4

Function:

Condensate/feedwater relief lines to pressure relief valves.

Failure Effect:

Partial loss of condensate/feedwater inventory and reduced feedwater flow.

5) Line Nos.: 2CNM-006-321-4, 2CNM-006-322-4, 2CNM-006-323-4

Function:

Condensate/feedwater relief lines from pressure relief valves to main condenser.

Failure Effect:

Loss of main condenser vacuum.

6) Line No.: 2CNM-010-29-4

Function:

Condensate recirculation to main condenser and bypass.

Failure Effect:

Loss of feedwater/condensate flow.

7) Line Nos.: 2CNM-012-33-4, 2CNM-012-34-4, 2CNM-012-35-4

Function:

Condensate booster pump recirculation to main condenser.

Failure Effect:

Loss of feedwater/condensate flow.

e. Moisture Separator Vents and Drains (DSM, 32-7)

1) Line Nos.: 2DSM-012-27-4 through 2DSM-012-32-4, 2DSM-012-37-4, 2DSM-016-38-4, 2DSM-018-39-4, 2DSM-020-41-4

Function:

Drains from moisture separator 2MSS-E1B to moisture separator drain receiver 2DSM-TK4B.

Failure Effect:

Loss of condensate from moisture separator 2MSS-E1B to moisture separator drain receiver 2DSM-TK4B and partial loss of condensate/feedwater heating at fourth point heaters.

Loss of condensate inventory. Fourth point heater drain pump flow reduced. (The most significant event is the loss of condensate/feedwater heating.)

2) Line No.: 2DSM-006-54-4

Function:

Vent line from moisture separator drain receiver 2DSM-TK4B to hot reheat for low-pressure turbine T2B.

Failure Effect:

Partial loss of steam supply to low-pressure turbine T2B.

3) Line Nos.: 2DSM-002-36-4, 2DSM-002-34-4, and 2DSM-004-35-4

Function:

Level instrumentation standpipe and process connections for 2DSM-TK4B.

Failure Effect:

Loss of moisture separator drain receiver tank 2DSM-TK4B condensate, and partial loss of steam to low-pressure turbines. Partial loss of condensate/feedwater heating at fourth point heaters. Fourth point heaters drain pump flow is reduced. (The most significant event is the loss of condensate/feedwater heating.)

4) Line No.: 2DSM-016-19-4, 2DSM-016-001-4

Function:

Provides condensate from moisture separator drain receiver 2DSM-TK4A/B to fourth point heaters.

Failure Effect:

Partial loss of condensate/feedwater heating at fourth point heaters from 2DSM-TK4B. Heater drain pump flow is reduced, which is not significant.

5) Line No.: 2DSM-016-26-4

Function:

Provides path to main condenser from moisture separator drain receiver 2DSM-TK4B.

Failure Effect:

Loss of main condenser vacuum.

6) Line No.: 2DSM-016-25-4

Function:

Provides path to main condenser from moisture separator drain receiver 2DSM-TK4B.

Failure Effect:

Loss of condensate from moisture separator drain receiver 2DSM-TK4B, partial loss of main steam to condenser, and partial loss of condensate/feedwater heating at fourth point heaters. Heater drain pump flow is reduced. (The most significant event is the loss of condensate/feedwater heating.)

f. Moisture Separator Reheater Vents and Drains (DSR, 32-6)

1) Line Nos.: 2DSR-002-24-4, 2DSR-002-26-4, and 2DSR-004-25-4

Function:

Level instrumentation standpipe and process connections for reheater drain receiver tank 2DSR-TK6B.

Failure Effect:

Loss of 2DSR-TK6B condensate and steam resulting in partial loss of feedwater heating at sixth point heaters.

2) Line No.: 2DSR-016-20-4

Function:

Provide path to main condenser from moisture separator reheater drain receiver 2DSR-TK6B.

Failure Effect:

Loss of condensate from reheater drain receiver 2DSR-TK6B and loss of steam from reheater moisture separator 2MSS-E1B resulting in partial loss of feedwater heating at sixth point heaters.

3) Line No.: 2DSR-016-21-4

Function:

Provide path to main condenser from moisture separator reheater drain receiver 2DSR-TK6B.

Failure Effect:

Loss of main condenser vacuum.

4) Line Nos.: 2DSR-006-73-4, 2DSR-006-101-4, 2DSR-008-103-4, 2DSR-002-119-4, 2DSR-008-105-4

Function:

Scavenging steam supply line and condensate drain line from moisture separator 2MSS-E1B to sixth point heater.

Failure Effect:

Loss of separator reheat steam and partial loss of feedwater/condensate heating at sixth point heater.

5) Line Nos.: 2DSR-008-104-4, 2DSR-006-106-4

Function:

Scavenging steam supply line and condensate drain line from moisture separator reheater drain receiver 2DSR-TK6A.

Failure Effect:

Loss of moisture separator reheat steam and partial loss of feedwater/condensate heating at sixth point heater.

6) Line No.: 2DSR-002-42-4

Function:

Blanketing steam header.

Failure Effect:

No significant effect.

7) Line Nos.: 2DSR-008-121-4, 2DSR-008-122-4

Function:

Vent lines to main condenser.

Failure Effect:

Loss of main condenser vacuum.

8) Line Nos.: 2DSR-016-1-4, 2DSR-016-14-4

Function:

Condensate from reheater drain receiver tanks 2DSR-TK6A and TK6B to sixth point heaters.

Failure Effect:

Loss of condensate to sixth point heaters and loss of steam from reheater moisture separators 2MSS-E1A, E1B resulting in partial loss of feedwater heating at sixth point heaters.

9) Line No.: 2DSR-024-22-4

Function:

Condensate from reheater moisture separator 2MSS-E1B to reheater drain receiver 2DSR-TK6B.

Failure Effect:

Loss of condensate from 2MSS-E1B to 2DSR-TK6B, and loss of condensate and steam to sixth point heater 2FWS-E6B resulting in partial loss of feedwater heating at sixth point heaters.

g. Turbine Building Miscellaneous Drains (DTM, 32-5)

1) Line Nos.: 2DTM-002-73-4 through 2DTM-002-76-4, 2DTM-150-111-4, 2DTM-125-143-4, 2DTM-150-144-4, 2DTM-125-145-4, 2DTM-150-146-4, 2DTM-025-173-4, 2DTM-025-174-4, 2DTM-025-175-4

Function:

Drain lines to main condenser.

Failure Effect:

Loss of main condenser vacuum.

2) Line Nos.: 2DTM-002-5-4, 2DTM-002-6-4, 2DTM-002-7-4

Function:

2ESS-MOV15A, 15B and 15C upstream drains to main condenser.

Failure Effect:

Partial loss of extraction steam from third point heater extraction lines, and partial loss of heating at third point heaters.

3) Line No.: 2DTM-002-16-4

Function:

2ESS-MOV22C upstream drain to main condenser.

Failure Effect:

Partial loss of extraction steam from fourth point heater extraction line, and partial loss of heating at fourth point heater.

4) Line No.: 2DTM-150-214-4

Function:

Auxiliary steam low point drain.

Failure Effect:

Partial loss of fourth point extraction steam, and fourth point feedwater heating.

5) Line Nos.: 2DTM-150-513-4, 2DTM-150-514-4

Function:

Low point drains from clean steam reboilers, auxiliary steam supply header to main condenser.

Failure Effect:

Partial loss of fourth point extraction steam and partial loss of fourth point feedwater heating.

h. Extraction Steam (ESS, 3-4)

1) Line Nos.: 2ESS-002-6-4, 2ESS-002-8-4, 2ESS-002-10-4, 2ESS-003-4-4, 2ESS-002-22-4, 2ESS-002-20-4, 2ESS-002-17-4, 2ESS-003-15-4, 2ESS-002-25-4, 2ESS-002-28-4, 2ESS-002-31-4, 2ESS-150-153-4, 2ESS-002-35-4, 2ESS-002-40-4, 2ESS-002-43-4

Function:

Extraction steam line drains from third, fourth, fifth, and sixth point heater lines to main condenser.

Failure Effect:

Partial loss of condensate inventory and partial loss of feedwater/condensate heating.

2) Line Nos.: 2ESS-012-5-4, 2ESS-012-7-4, 2ESS-012-9-4, 2ESS-002-020-4, 2ESS-002-18-4, 2ESS-002-23-4

Function:

High pressure turbine 2TMS-T1 extraction steam lines to sixth point heaters, 2FWS-E6A, E6B, E6C.

Failure Effect:

Partial loss of feedwater heating at sixth point heaters 2FWS-E6A, E6B, E6C, and partial loss of condensate inventory.

3) Line Nos.: 2ESS-016-16-4, 2ESS-016-19-4, 2ESS-016-21-4, 2ESS-002-70-4, 2ESS-002-71-4, 2ESS-018-11-4, 2ESS-024-13-4, 2ESS-008-60-4, 2ESS-006-251-4, 2ESS-018-12-4

Function:

Cold reheat extraction steam to fifth point heaters 2CNM-E5A, E5B, E5C, and building heating intermediate heat exchangers.

Failure Effect:

Partial loss of condensate heating at fifth point heaters 2CNM-E5A, E5B, E5C, and loss of building heating and partial loss of condensate inventory.

4) Line Nos.: 2ESS-014-24-4, 2ESS-014-27-4, 2ESS-014-30-4, 2ESS-002-85-4, 2ESS-002-86-4, 2ESS-012-95-4, 2ESS-012-96-4, 2ESS-012-97-4, 2ESS-016-200-4, 2ESS-016-33-4

Function:

L.P. turbines 2TMS-T2A, -T2B, -T2C extraction steam lines to fourth point heaters 2CNM-E4A, -E4B, -E4C, and turbine generator gland seal and exhaust steam.

Failure Effect:

Partial loss of condensate heating at fourth point heaters 2CNM-E4A, E4B, E4C, and loss of clean steam reboilers 2TME-E1A, E1B for turbine generator gland seal and exhaust steam; partial loss of condensate inventory.

5) Line Nos.: 2ESS-026-34-4, 2ESS-026-39-4, 2ESS-026-42-4, 2ESS-004-155-4, 2ESS-004-154-4, 2ESS-002-88-4, 2ESS-002-87-4, 2ESS-004-158-4, 2ESS-004-157-4, 2ESS-004-156-4, 2ESS-004-38-4

Function:

L.P. turbines 2TMS-T2A, -T2B, -T2C extraction steam lines and H.P. turbine gland packing steam to third point heaters 2CNM-E3A, -E3B, -E3C.

Failure Effect:

Partial loss of condensate heating at third point heaters 2CNM-E3A, -E3B, -E3C and partial loss of condensate inventory.

i. Feedwater Pump Recirculation (FWR, 6-3)

1) Line Nos.: 2FWR-020-4-4, 2FWR-020-5-4, and 2FWR-020-6-4

Function:

Feedwater pumps 2FWS-P1A, P1B, and P1C recirculation to main condenser.

Failure Effect:

Loss of feedwater and main condenser vacuum.

2) Line Nos.: 2FWR-010-1-4, 2FWR-010-2-4, and 2FWR-010-3-4

Function:

Feedwater pump 2FWS-P1A, 1B, or 1C recirculation line.

Failure Effect:

Reduced feedwater flow and loss of condensate inventory.

j. Feedwater (FWS, 6-1)

1) Line Nos.: 2FWS-020-110-4, 2FWS-016-116-4

Function:

Feedwater cycle cleanup system supply lines from sixth point heaters discharge header.

Failure Effect:

Partial loss of feedwater and reduced flow to reactor.

2) Line Nos.: 2FWS-008-117-4, 2FWS-008-120-4, 2FWS-008-122-4, 2FWS-012-119-4, 2FWS-016-125-4

Function:

High and low energy feedwater cleanup lines to main condenser.

Failure Effect:

During normal operation no significant effect as the system is isolated. However, if the respective feedwater cycle cleanup valve connecting to the main condenser is open loss of main condenser vacuum will result.

k. Low Pressure Feedwater Heater Drains (HDL, 4-2)

1) Line Nos.: 2HDL-002-206-4, 2HDL-002-207-4, 2HDL-004-208-4, 2HDL-002-216-4, 2HDL-002-217-4, 2HDL-004-218-4, 2HDL-002-227-4, 2HDL-002-226-4, 2HDL-004-228-4

Function:

Second point heater drain receiver tanks 2HDL-TK2A, 2B, or 2C level instrumentation standpipe.

Failure Effect:

Loss of condensate inventory and loss of condensate heating at second point heater drain coolers 2CNM-DCL2A, 2B, or 2C.

2) Line Nos.: 2HDL-014-201-4, 2HDL-014-211-4, and 2HDL-014-221-4

Function:

Second point heater 2CNM-E2A, E2B, or E2C drains to drain receiver tank 2HDL-TK2A, 2B, or 2C.

Failure Effect:

Loss of condensate inventory and partial loss of condensate heating at second point heater 2CNM-E2A, E2B, or E2C and second point heater drain cooler 2CNM-DCL2A, 2B, or 2C.

3) Line Nos.: 2HDL-008-203-4, 2HDL-008-213-4, and 2HDL-008-223-4

Function:

Fifth point heater drain receiver tanks 2HDL-TK2A, 2B, or 2C bypass to main condenser.

Failure Effect:

Same as Item 1) above.

4) Line No.: 2HDL-004-209-4, 2HDL-004-219-4, 2HDL-004-229-4

Function:

Vent lines from second point drain receiver tank 2HDL-TK2A, TK2B, TK2C to respective second point heater 2CNM-E2A, -E2B, or -E2C.

Failure Effect:

Partial loss of second point feedwater heating and extraction steam.

1. Main Steam (MSS, 3-1)

1) Line Nos.: 2MSS-010-189-4, 2MSS-006-167-4, 2MSS-002-237-4, 2MSS-002-146-4, 2MSS-150-251-4 through 2MSS-150-254-4, 2MSS-002-98-4, 2MSS-002-160-4, 2MSS-002-171-4, 2MSS-002-97-4

Function:

Main steam drain lines to main condenser.

Failure Effect:

Loss of main condenser vacuum.

2) Line No.: 2MSS-2-141-4

Function:

Main steam lines to turbine stop valves drain line to main condenser.

Failure Effect:

Insignificant loss of main steam.

3) Line No.: 2MSS-016-25-4

Function:

Main steam supply to moisture separator 2MSS-E1B.

Failure Effect:

Loss of heating steam to moisture separator 2MSS-E1B and partial loss of main steam.

4) Line Nos.: 2MSS-028-2-4, 2MSS-028-4-4

Function:

Main steam supply lines to turbine stop valves 2MSS-MSV1A, -MSV1B.

Failure Effect:

Loss of main steam to turbine stop valve 2MSS-MSV1A or 2MSS-MSV1B.

m. Feedwater Heater Relief Drains and Vents (SVH, 32-14)

Line Nos.: 2SVH-002-734-4, 2SVH-002-764-4, 2SVH-008-404-4, 2SVH-008-434-4, 2SVH-008-464-4, 2SVH-008-504-4, 2SVH-008-534-4, 2SVH-008-564-4, 2SVH-008-604-4, 2SVH-002-704-4, 2SVH-008-634-4, 2SVH-008-664-4, 2SVH-008-835-4, 2SVH-008-865-4, 2SVH-008-805-4, 2SVH-002-704-4

Function:

Safety valve drain lines to main condenser.

Failure Effect:

Loss of main condenser vacuum.

n. Turbine Generator Gland Seal and Exhaust (TME, 16-1)

1) Line Nos.: 2TME-008-75-4, 2TME-012-76-4, 2TME-008-84-4, 2TME-008-85-4, 2TME-012-418-4, 2TME-003-57-4

Function:

Safety and relief valve drains to main condenser.

Failure Effect:

Loss of main condenser vacuum.

2) Line Nos.: 2TME-002-74-4, 2TME-004-413-4

Function:

Main steam backup supply to turbine generator gland seal and exhaust steam.

Failure Effect:

Partial loss of main steam.

3) Line Nos.: 2TME-004-414-4, 2TME-006-41-4, 2TME-006-101-4

Function:

Main steam backup supply and relief line to turbine generator gland seal and exhaust steam.

Failure Effect:

Loss of turbine generator gland seal and exhaust steam backup source.

2. The following is the list of nonsafety-related control components that are affected by a high energy line break on any of the lines listed in Item 1. The consequence of failure of each control component is analyzed. Refer to Appendix B for the function of individual components.

A high energy line break in this zone will also result in failure of control components in Zones D and S. The significant consequences of such a failure have been integrated into the analysis by referring to the appropriate "Failure Effect" from the above listed zones in the "Combined Effect" section of this zone.

a. Condenser Air Removal (ARC, 5-1)

2ARC-AOV104, 2ARC-SOV104

Failure Effect:

If this air ejector isolation valve 2ARC-AOV104 fails close during normal operation when the air removal system for the condenser is shut down (which is manually started), then no air removal from the condensers will take place resulting in turbine trip on loss of condenser vacuum.

b. Auxiliary Steam (ASS, 3-9)

1) 2ASS-AOV145, 2ASS-SOV145

Failure Effect:

Failure of 2ASS-AOV145 valve in closed position will stop supply of auxiliary steam to clean steam reboilers. Auxiliary steam is alternate source to clean steam reboilers. Extraction steam and main steam sources are still available. In the event these sources are also lost due to closure of main steam valve 2ASS-STV112, or extraction

steam nonreturn valves 2ESS-NRV113 or NRV114 are inadvertently closed, turbine generator gland seal steam would be lost. This may result in gradual loss of condenser vacuum.

2) 2ASS-PV146, 2ASS-SOV146

Failure Effect:

If a failure of the auxiliary steam supply valve 2ASS-PV146 in the close position occurs, auxiliary steam backup to the main steam and fourth point extraction steam supply to the clean steam reboilers 2TME-E1A and 2TME-E1B will be lost. This is highly unlikely; however, if it occurs, turbine generator gland seal steam would be lost.

c. Condensate (CNM, 4-1)

1) 2CNM-FV38A, 2CNM-SOV38A, 2CNM-FV38B, 2CNM-SOV38B, 2CNM-FV38C, 2CNM-SOV38C

Failure Effect:

Failure of any or all of the condensate booster pump 2CNM-P2A, P2B, or P2C, recirculation valves 2CNM-FV38A, FV38B, or FV38C in open position will bypass condensate to main condenser, resulting in reduced feedwater flow and possibly loss of feedwater suction pressure.

If these valves fail closed, minimum booster pumps flow will not be maintained when required.

2) 2CNM-HV55A, 2CNM-SOV55A, 2CNM-HV55B, 2CNM-SOV55B, 2CNM-HV55C, 2CNM-SOV55C

Failure Effect:

Failure of the above valves has no significant effect.

3) 2CNM-FV114, 2CNM-SOV114

Failure Effect:

Failure of the valve in the open position will bypass condensate to the main condenser resulting in loss of feedwater flow.

d. Moisture Separator Vents and Drains (DSM, 32-7)

2DSM-LV78B, 2DSM-SOV78B

Failure Effect:

If valve 2DSM-LV78B fails open, partial loss of feedwater heating at fourth point heaters 2CNM-E4A, 2CNM-E4B, and 2CNM-E4C will result. Also, if the valve fails close, a high condensate level in 2DSM-TK4B may result.

e. Moisture Separator Reheater Vents and Drains (DSR, 32-6)

1) 2DSR-LS67B

Failure Effect:

If 2DSR-LS67B failure causes 2MSS-AOV92B to close, the result will be loss of main steam to moisture separator 2MSS-E1B. Loss of main steam to the moisture separator will result in reduced turbine efficiency and may lead to turbine vibration and consequent turbine trip.

2) 2DSR-LS68B, 2DSR-LV68B, 2DSR-SOV68B, 2DSR-SOVX68B, 2DSR-LT68B

Failure Effect:

Failure of any of the above devices which cause 2DSR-LV68B to open will drain condensate from 2DSR-TK1B to the main condenser. This drainage will result in a reduction of heating at sixth point heaters 2FWS-E6A, 2FWS-E6B, and 2FWS-E6C.

3) 2DSR-AOV82A, 2DSR-SOV82A, 2DSR-AOV82B, 2DSR-SOV82B

Failure Effect:

Failure of 2DSR-AOV82A in the open position will result in reduction of feedwater heating.

4) 2DSR-AOV83B, 2DSR-SOV83B, 2DSR-AOV84B, 2DSR-SOV84B

Failure Effect:

Failure of the scavenging steam warning and isolation valves in closed position may result in partial loss of feedwater heating and sixth point heater.

f. Extraction Steam (ESS, 3-1)

1) 2ESS-NRV113, 2ESS-SOVX113, 2ESS-SOVY113, 2ESS-NRV114, 2ESS-SOVX114, 2ESS-SOVY114, 2ESS-STV104, 2ESS-SOV104

Failure Effect:

Failure of STV104 in closed position will stop extraction steam to clean steam reboilers. Clean steam reboiler has alternate sources of steam available from main steam or auxiliary steam. In the event both sources are lost due to closure of main steam isolation valve 2ASS-STV112 or auxiliary steam supply valve 2ASS-PV146, turbine generator gland seal steam would be lost. This may result in gradual loss of condenser vacuum. Failure of the NRVs and associated SOVs has no significant effect.

2) 2ESS-NRV103, 2ESS-SOVX103, 2ESS-SOVY103, 2ESS-NRV109, 2ESS-SOVX109, 2ESS-SOVY109, 2ESS-STV105, 2ESS-SOV105

Failure Effect:

Failure of STV105 in closed position will stop extraction steam to building heating heat exchangers. No significant effect on the system. Failure of the NRVs and associated SOVs has no significant effect.

3) 2ESS-NRV34A, 2ESS-SOVX34A, 2ESS-SOVY34A, 2ESS-NRV34B, 2ESS-SOVX34B, 2ESS-SOVY34B, 2ESS-NRV34C, 2ESS-SOVX34C, 2ESS-SOVY34C

Failure Effect:

Failure of the above valves in the closed position has no significant effect.

4) 2ESS-NRV16A, 2ESS-SOVX16A, 2ESS-SOVY16A, 2ESS-NRV16B, 2ESS-SOVX16B, 2ESS-SOVY16B, 2ESS-NRV16C, 2ESS-SOVX16C, 2ESS-SOVY16C

Failure Effect:

Failure of the above nonreturn valves in the close position has no significant effect.

5) 2ESS-NRV23A, 2ESS-SOVX23A, 2ESS-SOVY23A, 2ESS-NRV23B, 2ESS-SOVX23B, 2ESS-SOVY23B, 2ESS-NRV23C, 2ESS-SOVX23C, 2ESS-SOVY23C

Failure Effect:

Failure of the above valves closed will have no significant effect.

6) 2ESS-HV47A, 2ESS-SOV47A, 2ESS-HV47B, 2ESS-SOV47B,
2ESS-HV48A, 2ESS-SOV48A, 2ESS-HV48B, 2ESS-SOV48B,
2ESS-HV47C, 2ESS-SOV47C, 2ESS-HV48C, 2ESS-SOV48C,
2ESS-HV46A, 2ESS-SOV46A, 2ESS-HV46B, 2ESS-SOV46B,
2ESS-HV46C, 2ESS-SOV46C, 2ESS-HV49A, 2ESS-SOV49A,
2ESS-HV49B, 2ESS-SOV49B, 2ESS-HV49C, 2ESS-SOV49C

Failure Effect:

If any of the above fourth or fifth point heater warming valves fail open or close, there is no significant impact.

g. Feedwater Pump Recirculation (FWR, 6-3)

2FWR-FV2A, 2FWR-SOVX2A, 2FWR-SOVY2A, 2FWR-FV2B, 2FWR-SOVX2B, 2FWR-SOVY2B, 2FWR-FV2C, 2FWR-SOVX2C, 2FWR-SOVY2C

Failure Effect:

If valves fail open, feedwater flow to reactor will be reduced resulting in turbine runback.

If valves fail closed, feedwater pump minimum recirculation requirement may not be met, causing feedwater pump degradation at low feedwater flow levels.

h. Feedwater (FWS, 6-1)

1) 2FWS-HVX113, 2FWS-HVY113, 2FWS-SOVX113, 2FWS-SOVY113

Failure Effect:

If the low energy cleanup valves fail open during normal plant operation, no effect will result unless 2FWS-MOV112 fails open due to failure of pressure switch 2FWS-PS112 or 2FWS-PS113 and inadvertent operator action to open the MOV112 from the main control room. This will divert feedwater flow to the main condenser and not to the reactor.

2) 2FWS-HVX111, 2FWS-HVY111, 2FWS-HVZ111

Failure Effect:

If the above valves open during normal plant operation, no effect will result unless 2FWS-MOV110 is inadvertently open. 2FWS-MOV110 is manually controlled from the main control room, and if this valve is inadvertently opened then a significant feedwater flow will be diverted to main condenser and not to the reactor.

i. Low Pressure Feedwater Heater Drains (HDL, 4-2)

1) 2HDL-LT2A, 2HDL-LT2B, 2HDL-LT2C

Failure Effect:

If the above instrumentation fails the normal drain valves 2HDL-LV2A, 2HDL-LV2B, and 2HDL-LV2C in the open position, then a partial loss of second point low pressure feedwater heating will result.

2) 2HDL-LS22A, 2HDL-LS22B, 2HDL-LS22C, 2HDL-LT22A, 2HDL-LT22B, 2HDL-LT22C

Failure Effect:

If the above instrumentation fails the emergency level control valves 2HDL-LV22A, 2HDL-LV22B, and 2HDL-LV22C in the open position, second point low pressure feedwater heating from heaters 2CNM-E2A, 2CNM-E2B, and 2CNM-E2C will be reduced or lost due to the draining of the drain receiver tanks 2HDL-TK2A, TK2B and TK2C to the condenser. If any or all of the above valves fail closed, second point low pressure feedwater heating may also be reduced or lost due to the backup of water from the tanks to the heaters.

3) 2HDL-LS7A, 2HDL-LS7B, 2HDL-LS7C, 2HDL-LS8A, 2HDL-LS8B, 2HDL-LS8C

Failure Effect:

If the above level switches fail such that high level in the first and second point heaters is not sensed, a high level condition in the first and second point feedwater heaters will result. This can eventually cause water induction into the low-pressure turbines, leading to turbine vibration and turbine trip.

If the level switches fail such that two or more of the associated low-pressure feedwater strings are isolated and the associated heater drain pumps stop, a total loss of feedwater to the reactor may occur as a result.

If only one of the low-pressure feedwater heater strings is isolated, the other two strings will pick up the flow.

j. Main Steam (MSS, 3-1)

1) 2MSS-I/P22B, 2MSS-PV28B, 2MSS-PV29B

Failure Effect:

Instrumentation failure causing inadvertent closure of moisture separator main steam supply valves 2MSS-PV28B or 2MSS-PV29B which can result in reduction of hot reheat steam temperature to low-pressure turbines.

2) 2MSS-AOV201, 2MSS-SOV201, 2MSS-AOV209, 2MSS-SOV209

Failure Effect:

If these valves fail open, no significant impact occurs.

3) 2MSS-AOV92B, 2MSS-SOV92B

Failure Effect:

If this valve fails close, main steam supply to moisture separator reheater 2MSS-E1B will be shut off. This will cause poor quality reheat steam to the low pressure turbines, which may lead to turbine vibrations and trip.

k. Turbine Generator Gland Seal and Exhaust (TME, 16-1)

2TME-AOV121, 2TME-SOV121, 2TME-PV122

Failure Effect:

If either of these valves fail close, then the main steam backup supply to the turbine generator gland seal and exhaust system will be lost. Normal supply is from the clean steam reboilers 2TME-E1A or 2TME-E1B. If this supply is lost, condenser vacuum will eventually be lost.

3. Combined Effect

a. A break in condenser air removal high energy line in this zone results in loss of main condenser vacuum bounded by FSAR Section 15.2.5. Failure of control components in this zone or in Zones D or S does not exacerbate this event.

b. 1) A break in auxiliary steam line in this zone (Item 1.b.1) has no significant effect. However, failure of control components in this zone may result in failure of condensate booster pumps recirculation valves 2CNM-FV38A, FV38B or FV38C in open position will bypass condensate to main condenser, resulting in reduced feedwater and possible loss of feedwater suction pressure. This will bring the reactor vessel level down resulting in reactor scram. Loss of feedwater event is bounded by FSAR Section 15.2.7 analyses.

Failure of control components in Zones D or S may result in the following events:

a) Loss of feedwater (Zone D), an event bounded by FSAR Section 15.2.7 analyses.

b) Feedwater controller failure - maximum demand, an event (Zone D) bounded by FSAR Section 15.1.2 analyses.

c) Partial loss of feedwater heating (Zone D), in fifth and sixth point heaters and second and third point heater drain coolers and in only one of three fourth point heaters, an event bounded by FSAR Section 15.1.1 analyses.

d) Turbine trip (Zones D or S), an event bounded by FSAR Section 15.2.3.

e) Loss of main condenser vacuum, bounded by FSAR Section 15.2.5 analyses.

f) Misoperation of rod sequence control system (RSCS) (Zone S) which leads to reactor scram, an event bounded by FSAR Section 15.4 analyses.

For a detailed discussion of these events, refer to Appendix D, Zones D or S, Section 3.

When partial loss of feedwater heating occurs, failure of certain components in this zone (Items 2.d, 2.e.2, 2.e.3, 2.f.3 through 2.f.5, 2.i.1 through 2.i.3) can result in loss of sixth point feedwater heaters affecting as many as three feedwater strings, and in partial loss of second and fourth point feedwater heaters. This event is bounded by FSAR Section 15.1.1 analysis.

2) A break in auxiliary steam line in this zone (1.b.2, 1.b.4) will result in loss of turbine general gland seal and exhaust steam. An additional source of main steam is available for turbine generator gland seals. However, if both sources are lost, turbine trip will occur due to loss of main condenser vacuum bounded by FSAR Section 15.2.5 analyses. Control component failure is analyzed in Item 3.b.1 above.

3) A break in auxiliary steam line in this zone (Item 1.b.3) results in loss of main condenser vacuum. Refer to Item 3.a for further analyses.

c. 1) A break in auxiliary condensate high energy line (Items 1.c.1, 1.c.2) in this zone results in loss of condensate inventory and condensate heating at third point heaters. Loss of feedwater heating is bounded by FSAR Section 15.1.1 analyses. Refer to Item 3.b.1 for analysis of control component failures.

2) A break in auxiliary condensate high energy line (Item 1.c.3) in this zone results in loss of main condenser vacuum. Refer to Item 3.b.1 for further analyses.

d. 1) A break in any condensate high energy lines in this zone (Items 1.d.1, 1.d.2, 1.d.3) will result in loss of condensate flow in feedwater heater train associated with the pipe break. A low feedwater suction pressure will result in reactor feedwater pump trip. This is a pipe break in feedwater line outside the containment and bounded by FSAR Section 15.6.6 analyses. Failure of control components in this zone or Zones D or S does not exacerbate this event.

2) A break in condensate high energy line in this zone (Items 1.d.4 through 1.d.7) results in loss of feedwater or reduced flow to the reactor. Loss of feedwater flow event is bounded by FSAR Section 15.6.6 analyses. Reduced feedwater flow will result in proportional reduction of reactor vessel inventory causing the vessel level to drop. This event is bounded by FSAR Section 15.2.7 analyses. Control component failure for this zone or Zones D or S is discussed in Item 3.b.1 above.

e. 1) A break in any of the moisture separator vent or drain high energy lines in this zone (Item 1.e.2) causes loss of hot reheat steam to associated low-pressure turbines, causing unbalanced steam temperature resulting in asymmetrical operation leading to high vibration and turbine trip. For failure of control components in this zone or Zones D or S, refer to Item 3.b.1 above.

2) A break in any of the moisture separator vent and drain high energy lines in this zone (Items 1.e.1, 1.e.3, 1.e.4, 1.e.6) results in loss of condensate from moisture separator and loss of feedwater heating at fourth point heaters. Loss of feedwater heating event is bounded by FSAR Section 15.1.1 analyses. Refer to Item 3.b.1 for control component failure analyses.

3) A break in moisture separator vent and drain high energy line in this zone (Item 1.e.5) results in loss of main condenser vacuum. This event is bounded by FSAR Section 15.2.5 analyses. Failure of control components in this zone or Zones D or S does not exacerbate this event.

f. 1) A break in any of the moisture separator reheater vent and drain high energy lines in this zone (Items 1.f.1, 1.f.2, 1.f.4, 1.f.5, 1.f.8, and 1.f.9) results in loss of condensate from moisture separator reheater and/or moisture separator reheater drain receiver and loss of feedwater heating at sixth point heaters. Loss of feedwater heating event is bounded by FSAR Section 15.1.1 analyses. Refer to Item 3.b.1 for control component failure analyses.

2) A break in the moisture separator reheater vent and drain high energy lines in this zone (Items 1.f.3 and 1.f.7) results in loss of main condenser vacuum. This event is bounded by FSAR Section 15.2.5 analyses. Failure of control components in this zone or Zones D or S does not exacerbate this event.

3) A break in the moisture separator reheater vent and drain high energy line (1.f.6) has no significant effect. However, failure of control components in this zone or in Zones D or S may result in one or more events analyzed in Item 3.b.1.

g. 1) A break in the turbine plant miscellaneous drains high energy line in this zone (Item 1.g.1) results in loss of main condenser vacuum. This event is bounded by FSAR Section 15.2.5 analyses. For control component failure analysis, refer to Item 3.b.1 above.

2) A break in the turbine plant miscellaneous drains high energy lines in this zone (Items 1.g.2, 1.g.3, 1.g.4, and 1.g.5) results in loss of feedwater heating at third or fourth point heaters. Loss of feedwater heating event is bounded by FSAR Section 15.1.1 analyses. Refer to Item 3.b.1 for control component failure analysis.

h. A break in the extraction steam high energy lines in this zone (Items 1.h.1, 1.h.2, 1.h.3, and 1.h.5) will result in loss of condensate inventory and/or extraction steam, and in loss of feedwater heating to third, fourth, fifth, or sixth point feedwater heaters. Additionally, a break (Item 1.h.4) may result in loss of clean steam reboiler which supplies steam for the turbine gland seal system. A backup source is available from main steam to supply turbine generator gland seal steam. Loss of feedwater heating is bounded by FSAR Section 15.1.1 analyses.

Refer to Item 3.b.1 for analysis of control component failures.

i. A break in the feedwater recirculation high energy lines in this zone will result in loss of main condenser vacuum concurrent with partial or total loss of feedwater to the reactor.

This event is bounded by FSAR Sections 15.6.6 and 15.2.5 analyses. Failure of control components located in this zone or Zones D or S does not exacerbate this event.

j. 1) A break in the feedwater high energy line (Item 1.j.1) results in loss of feedwater causing a low reactor water level reactor scram. This event is bounded by FSAR Section 15.6.6 analyses, feedwater line break outside containment. Failure of control components in this zone or Zones D or S does not exacerbate this event.

2) A break in feedwater line (Item 1.j.2) during normal operation results in no effect, since this portion of the system is isolated from the high energy feedwater.

k. A break in the low-pressure feedwater heater drain high energy lines in this zone results in loss of condensate inventory from system drain points and loss of feedwater heating at second or fifth point feedwater heaters. Loss of feedwater heating event is bounded by FSAR Section 15.1.1 analyses. Refer to Item 3.b.1 for control component failure analysis.

l. 1) A break in the main steam high energy lines in this zone (Items 1.1.3 and 1.1.4) results in a loss of main steam. This event results in closure of main steam isolation valves due to high steam flow and reactor scram. The event is bounded by FSAR Section 15.6.4 analyses. Failure of control components in this zone or Zones D or S does not exacerbate this event.

2) A break in the main steam high energy line (Item 1.1.1) will result in a loss of condenser vacuum. This event is bounded by FSAR Section 15.2.5 analyses. Failure of control components in this zone or Zones D or S does not exacerbate this event in the event of an immediate loss of vacuum. If loss of vacuum is gradual, Item 3.b.1 discusses effects of control component failures.

3) A break in the main steam high energy line in this zone (Item 1.1.2) will result in no significant effect. However, in the unlikely event that the failure of this line does affect performance of control components in this zone, Item 3.b.1 provides the control component failure analysis.

m. A break in the feedwater heater relief vents and drains high energy lines in this zone will result in loss of condenser vacuum. This event is bounded by FSAR Section 15.2.5 analyses. Refer to Item 3.b.1 for analysis of control component failures for cases where the loss of vacuum is gradual. If the loss is immediate, control component failures do not exacerbate the event.

n. 1) A break in the turbine generator gland seal and exhaust high energy lines in this zone (Item 1.n.1) will result in a loss of condenser vacuum. This event is bounded by FSAR Section 15.2.5 analyses. Failure of control components in this zone or Zones D or S does not exacerbate this event.

2) A break in the turbine generator gland seal and exhaust high energy line in this zone (Item 1.n.2) will result in a partial loss of main steam. This event may result in main steam isolation valve closure and reactor trip. This event is bounded by FSAR Section 15.6.4 analyses. If main steam isolation valve closure does not occur, this event will result in a partial loss of main steam. If the break cannot be isolated, entry of steam into this zone or Zones D or S may cause control component failures which are analyzed in Item 3.b.1.

3) A break in the turbine generator gland seal and exhaust high energy lines in this zone (Item 1.n.3) during normal operation results in no significant effect, since this line is normally isolated from the high energy steam.

APPENDIX D

HIGH ENERGY LINE BREAK ANALYSIS

ZONE D

BUILDING: Turbine Building
LOCATION: El 306 ft 0 in.
El 277 ft 6 in.
El 250 ft 0 in. Tunnels

HELB SYSTEM		CONTROL SYSTEM	
ARC (5-1)	Condenser Air Removal	ARC (5-1)	Condenser Air Removal
ASS (3-9)	Auxiliary Steam	ASS (3-9)	Auxiliary Steam
CNA (4-4)	Auxiliary Condensate	CCS (9-7)	Turbine Plant Component Cooling Water
CNM (4-1)	Condensate	CND (4-7)	Condensate Demineralizer
DTM (32-5)	Turbine Building Miscellaneous Drains	CNM (4-1)	Condensate
FWP (6-4)	Feedwater Pump Seal and Leakoff	CNO (4-10)	Condensate Booster Pump Lube Oil
FWR (6-3)	Feedwater Pump Recirculation	CNS (4-3)	Condensate Makeup/ Drawoff
FWS (6-1)	Feedwater	DSM (32-7)	Moisture Separator Vents and Drains
HDH (6-6)	High Pressure Feedwater Heater Drain	DSR (32-6)	Moisture Separator Reheater Vents and Drains
HDL (4-2)	Low Pressure Feedwater Heater Drain	ESS (3-4)	Extraction Steam
HVG (22-17)	Glycol Heating	FWL (7-3)	FDW Pump and Drive Lube Oil
HVH (22-16)	Hot Water Heating	FWP (6-4)	FDW Pump Seal and Leakoff
OFG (31-4)	Offgas	FWR (6-3)	FDW Pump Recirculation

SVH (32-14)	FDW Heater Relief Vents and Drains
TME (16-1)	Turbine Generator Gland Seal and Exhaust
FWS (6-1)	Feedwater
GMC (16-8)	Generator Stator Cooling Water
GMH (16-7)	Generator Hydrogen and CO2
GML (16-10)	Generator Leads Cooling
GMO (16-6)	Generator Seal Oil
HDH (6-6)	High Pressure Feedwater Heater Drains
HDL (4-2)	Low Pressure Feedwater Heater Drains
MSS (3-1)	Main Steam
SWP (9-10)	Service Water
TMB (16-5.2)	Turbine Generator EH Fluid
TME (16-1)	Turbine Generator Gland Seal and Exhaust
TML (16-2)	Turbine Generator Lube Oil

1. The following is a list of high energy lines analyzed on a system basis:

   a. Condenser Air Removal (ARC, 5-1)

      1) Line No. 2ARC-012-009-4

         Function

         Condenser steam air ejector discharge to offgas system.

         Failure Effect

         Loss of offgas processing. High radiation.

2) Line Nos. 2ARC-025-015-4 and 2ARC-025-016-4

Function

Condenser air removal intercondenser 2ARC-E3A and 2ARC-E3B drain line to the main condenser.

Failure Effect

Loss of condenser vacuum.

b. Auxiliary Steam (ASS, 3-9)

1) Line Nos. 2ASS-150-10-4 and 2ASS-150-69-4

Function

Auxiliary steam supply to offgas system.

Failure Effect

Loss of offgas treatment due to loss of steam to offgas preheaters 2OFG-E1A, E1B.

2) Line No. 2ASS-003-502-4

Function

Safety valve drain to main condenser.

Failure Effect

Loss of main condenser vacuum.

3) Line No. 2ASS-004-91-4

Function

Auxiliary steam supply to condenser air removal system.

Failure Effect

Partial loss of auxiliary steam.

4) Line No. 2ASS-004-92-4

Function

Auxiliary steam supply to condenser air removal system.

Failure Effect

Loss of offgas removal capability from steam jet air ejectors.

c. Auxiliary Condensate (CNA, 4-4)

1) Line Nos. 2CNA-150-6-4, 2CNA-003-303-4, and 2CNA-003-304-4

Function

Safety valve and vent lines to main condenser.

Failure Effect

Loss of main condenser vacuum.

2) Line Nos. 2CNA-006-2-4 and 2CNA-006-52-4

Function

Reboiler drain tank 2CNA-TK1A drain lines.

Failure Effect

Partial loss third point heating and partial loss of condensate inventory.

3) Line Nos. 2CNA-004-652-4 and 2CNA-004-653-4

Function

Building heating intermediate heat exchangers 2HVH-E1A and E1B safety valve lines.

Failure Effect

Loss of building heating and partial loss of condensate.

4) Line Nos. 2CNA-150-19-4 and 2CNA-150-21-4

Function

Building heating intermediate heat exchangers drain lines to main condenser.

Failure Effect

Partial loss of condensate inventory.

d. Condensate (CNM, 4-1)

1) Line Nos. 2CNM-030-17-4, 2CNM-030-18-4, 2CNM-030-20-4, 2CNM-030-22-4, 2CNM-030-23-4, 2CNM-030-24-5, 2CNM-030-25-4, 2CNM-030-174-4, 2CNM-025-317-4, and 2CNM-010-029-4

Function

Carry condensate from condensate pumps discharge header to condensate demineralizer to air ejector intercondensers, to turbine generator gland seal and exhaust steam condensers (2TME-E2A and E2B) to condensate booster pump suction header.

Failure Effect

Loss of condensate flow.

2) Line Nos. 2CNM-024-012-4, 2CNM-024-13-4, 2CNM-024-74-4, 2CNM-030-236-4

Function

Condensate pumps 2CNM-P1A, P1B, and P1C discharge lines.

Failure Effect

Loss of condensate flow.

3) Line Nos. 2CNM-024-32-4, 2CNM-024-75-4, and 2CNM-024-211-4

Function

Condensate booster pumps 2CNM-P2A, P2B, and P2C suction lines.

Failure Effect

Partial loss of condensate flow and loss of respective condensate booster pump.

4) Line Nos. 2CNM-024-84-4, 2CNM-024-85-4, and 2CNM-024-86-4

Function

Feedwater pumps 2FWS-P1A, P1B, and P1C suction lines.

Failure Effect

Partial loss of feedwater flow and loss of respective feedwater pump.

5) Line Nos. 2CNM-020-39-4, 2CNM-020-40-4, 2CNM-020-41-4, 2CNM-030-42-4, and 2CNM-012-33-4

Function

Condensate booster pump discharge lines and header.

Failure Effect

Loss of condensate flow.

6) Line No. 2CNM-002-276-4

Function

Condensate pumps 2CNM-P1A, P1B, and P1C seal injection water lines.

Failure Effect

Loss of condensate pump seals.

7) Line Nos. 2CNM-003-173-4, 2CNM-002-237-4, and 2CNM-002-69-4

Function

Condensate to turbine exhaust hood spray system.

Failure Effect

Loss of turbine exhaust hood spray system which may result in high turbine exhaust hood temperature.

8) Line No. 2CNM-016-19-4

Function

Condensate demineralizer system bypass line.

Failure Effect

Loss of condensate inventory and reduced condensate flow.

9) Line No. 2CNM-004-71-4

Function

Condensate drawoff connection to condensate storage tank.

Failure Effect

Partial loss of condensate inventory and partial loss of condensate flow.

10) Line No. 2CNM-004-203-4

Function

Condensate supply to clean steam reboilers 2TME-E1A and E1B.

Failure Effect

Partial loss of condensate inventory and loss of turbine generator gland seal and exhaust steam.

11) Line No. 2CNM-003-200-4

Function

Condensate supply to feedwater pump seals.

Failure Effect

Loss of feedwater seals and partial loss of condensate inventory.

e. Turbine Building Miscellaneous Drains (DTM, 32-5)

1) Line Nos. 2DTM-150-64-4, 2DTM-150-65-4, 2DTM-150-135-4, 2DTM-150-185-4, 2DTM-150-473-4, 2DTM-150-479-4, 2DTM-150-480-4, 2DTM-025-175-4, 2DTM-025-176-4, and 2DTM-150-186-4

Function

Miscellaneous drain lines to main condenser.

Failure Effect

Loss of main condenser vacuum.

2) Line No. 2DTM-002-14-4, 2DTM-002-15-4, and 2DTM-002-16-4

Function

2ESS-MOV22A, 22B, and 22C upstream drains to main condenser.

Failure Effect

Partial loss of extraction steam from fourth point heater extraction lines and partial loss of heating at fourth point heaters.

3) Line Nos. 2DTM-002-28-4, 2DTM-002-29-4, 2DTM-002-30-4, 2DTM-003-27-4, 2DTM-002-61-4, 2DTM-002-62-4, 2DTM-002-63-4, and 2DTM-003-60-4

Function

Fifth and sixth point extraction header drain lines to main condenser.

Failure Effect

Partial loss of extraction steam from fifth or sixth point heater extraction lines, and partial loss of heating at fifth or sixth point heaters.

4) Line Nos. 2DTM-150-139-4, 2DTM-150-140-4, and 2DTM-150-214

Function

Auxiliary steam low point drains.

Failure Effect

Partial loss of fourth or fifth point extraction steam and partial loss of fourth or fifth point feedwater heating.

5) Line Nos. 2DTM-150-513-4, 2DTM-150-514-4

Function

Low point drains from clean reboilers auxiliary steam supply header to main condenser.

Failure Effect

Partial loss of fourth point extraction steam and partial loss of fourth point feedwater heating.

f. Feedwater Pump Seal and Leakoff (FWP, 6-4)

Line Nos. 2FWP-003-001-4, 2FWP-002-002-4, 2FWP-002-003-4, 2FWP-002-004-4

Function

Condensate supply to reactor feed pump seals and leakoffs.

Failure Effect

Partial loss of condensate and loss of feed pump seals and leakoffs.

g. Feedwater Pump Recirculation (FWR, 6-3)

Line Nos. 2FWR-010-001-4, 2FWR-010-002-4, and 2FWR-010-003-4

Function

Feedwater pump 2FWS-P1A, 2FWS-P1B, 2FWS-P1C individual recirculation line to main condenser.

Failure Effect

Reduce feedwater flow and loss of condensate inventory.

h. Feedwater (FWS, 6-1)

1) Line Nos. 2FWS-024-6-4, 2FWS-024-7-4, 2FWS-024-9-4, 2FWS-024-10-4, 2FWS-024-12-4, 2FWS-024-13-4

Function

Reactor feed pump 2FWS-P2A, 2FWS-P2B, and 2FWS-P2C discharge line.

Failure Effect

Loss of feedwater flow.

2) Line Nos. 2FWS-006-89-4, 2FWS-006-90-4, 2FWS-006-91-4, 2FWS-006-92-4, 2FWS-006-138-4, 2FWS-006-139-4, 2FWS-006-140-4, 2FWS-006-141-4

Function

Reactor feedwater pump 2FWS-P2A, P2B startup discharge lines.

Failure Effect

Reduced feedwater flow.

3) Line Nos. 2FWS-024-27-4, 2FWS-024-28-4

Function

Feedwater discharge lines to reactor.

Failure Effect

Loss of feedwater flow.

4) Line No. 2FWS-020-110-4

Function

High/low energy feedwater cycle cleanup header.

Failure Effect

Reduced feedwater flow.

i. High Pressure Feedwater Heater Drains (HDH, 6-6)

Line Nos. 2HDH-014-603-4, 2HDH-014-613-4, and 2HDH-014-623-4

Function

Sixth point heater emergency drain lines to main condenser.

Failure Effect

Partial loss of sixth point feedwater heating and loss of condensate inventory.

j. Low Pressure Feedwater Heater Drains (HDL, 4-2)

1) Line Nos. 2HDL-008-202-4, 2HDL-008-203-4, 2HDL-008-205-4, 2HDL-008-212-4, 2HDL-008-213-4, 2HDL-008-215-4, 2HDL-008-222-4, 2HDL-008-223-4, 2HDL-008-225-4

Function

Condensate heaters 2CNM-E2A, E2B, E2C drain receiver tank 2CNM-TK2A, TK2B, TK2C discharge lines to or from respective drain coolers to main condenser.

Failure Effect

Partial loss of condensate heating and partial loss of condensate inventory.

2) Line Nos. 2HDL-008-302-4, 2HDL-008-304-8, 2HDL-008-312-4, 2HDL-008-314-4, 2HDL-008-322-4, 2HDL-008-324-8

Function

Third point heaters 2CNM-E3A, E3B, E3C discharge lines to or from respective drain coolers to main condenser.

Failure Effect

Partial loss of condensate heating and partial loss of condensate inventory.

3). Line Nos. 2HDL-018-402-4, 2HDL-018-422-4, 2HDL-018-442-4

Function

Fourth point heater 2CNM-E4A, E4B, E4C drain lines to main condenser.

Failure Effect

Partial loss of condensate heating at fourth point heater and partial loss of condensate inventory.

4) Line Nos. 2HDL-016-503-4, 2HDL-016-513-4, 2HDL-016-523-4

Function

Fifth point heater 2CNM-E5A, E5B, E5C drain lines to main condenser.

Failure Effect

Partial loss of condensate heating at fifth point heater and partial loss of condensate inventory.

k. Glycol Heating (HVG, 22-17)

1) Line Nos. 2HVG-006-1-4, 2HVG-006-2-4, 2HVG-006-3-4, 2HVG-006-4-4, 2HVG-006-5-4, 2HVG-006-6-4, 2HVG-003-15-4 through 2HVG-003-22-4, 2HVG-025-150-4 through 2HVG-025-157-4

Function

Supply glycol heating to turbine building from outside air heating coil 2HVT-CH1.

Failure Effect

Loss of turbine building heating.

2) Line Nos. 2HVG-002-12-4, 2HVG-002-13-4, 2HVG-004-14-4, 2HVG-150-38-4

Function

Expansion tank 2HVG-TK1 supply line and level instrumentation standpipe.

Failure Effect

Eventual loss of turbine building heating due to loss of heating fluid.

3) Line Nos. 2HVG-150-121-4, 2HVG-150-122-4, 2HVG-150-123-4

Function

Glycol addition tank 2HVG-TK4 fill and discharge connections.

Failure Effect

Eventual loss of turbine building heating due to loss of heating fluid.

1. Hot Water Heating (HVH, 22-16)

1) Line Nos. 2HVH-006-23-4, 2HVH-006-24-4, 2HVH-006-37-4, 2HVH-006-38-4, 2HVH-006-39-4, 2HVH-008-81-4, 2HVH-008-82-4, 2HVH-008-87-4, 2HVH-008-88-4, 2HVH-008-89-4

Function

Hot water supply to turbine building glycol heat exchanger 2HVG-E1.

Failure Effect

Loss of turbine building heating.

2) Line Nos. 2HVH-002-34-4, 2HVH-002-35-4, 2HVH-004-36-4

Function

Hot water heating expansion tank 2HVH-TK1A level instrumentation standpipe.

Failure Effect

Loss of turbine building heating hot water and eventual loss of turbine building heating.

3) Line Nos. 2HVH-006-6-4 through 2HVH-006-9-4, 2HVH-008-16-4, 2HVH-008-17-4

Function

Turbine building intermediate heat exchanger 2HVH-E1A and E1B hot water supply and discharge lines.

Failure Effect

Loss of turbine building heating.

4) Line Nos. 2HVH-008-10-4, 2HVH-008-11-4, 2HVH-006-12-4 through 2HVH-006-15-4

Function

Turbine building heating auxiliary heat exchanger 2HVH-E3A and E3B supply and discharge lines.

Failure Effect

Loss of backup turbine building heating source.

5) Line Nos. 2HVH-008-19-4 through 2HVH-008-22-4, 2HVH-004-25-4, 2HVH-004-26-4, 2HVH-006-27-4, 2HVH-006-28-4, 2HVH-006-62-4, 2HVH-006-66-4

Function

Hot water heating pumps 2HVH-P1A and P1B supply and discharge header and supply and return lines to turbine building, radwaste and reactor building.

Failure Effect

Loss of turbine building, radwaste and reactor building heating.

6) Line No. 2HVH-150-18-4

Function

Hot water heating expansion tank 2HVH-TK1 connecting line to air separator tank 2HVH-ASP1.

Failure Effect

Eventual loss of hot water heating.

m. Offgas (OFG, 31-4)

Line Nos. 20FG-002-206-4 and 20FG-003-186-4

Function

Offgas condenser 20FG-CND1B condensate drain line to the main condenser.

Failure Effect

Loss of main condenser vacuum.

n. Feedwater Heater Relief Vents and Drains (SVH, 32-14)

Line Nos. 2SVH-002-302-4, 2SVH-002-332-4, 2SVH-002-362-4, 2SVH-002-402-4, 2SVH-002-407-4, 2SVH-002-432-4, 2SVH-002-437-4, 2SVH-002-462-4, 2SVH-002-467-4, 2SVH-002-991-4, 2SVH-003-307-4, 2SVH-003-337-4, 2SVH-003-367-4, 2SVH-004-992-4, 2SVH-004-993-4, 2SVH-004-994-4, 2SVH-002-501-4, 2SVH-002-502-4, 2SVH-002-531-4, 2SVH-002-532-4, 2SVH-002-561-4, 2SVH-002-562-4, 2SVH-002-602-4, 2SVH-002-632-4, 2SVH-002-662-4

Function

Feedwater heater relief vents and drains to main condenser.

Failure Effect

Loss of main condenser vacuum.

o. Turbine Generator Gland Seal and Exhaust (TME, 16-1)

Line Nos. 2TME-008-84-4, 2TME-008-85-4, 2TME-012-418-4, 2TME-012-77-4, 2TME-008-75-4, 2TME-012-76-4

Function

Safety and relief valve drain lines to main condenser.

Failure Effect

Loss of main condenser vacuum.

2. The following is the list of nonsafety-related control components that are affected by a high energy line break on any of the lines listed in Item 1. The consequence of failure of each control component is analyzed. Refer to Appendix B for the function of individual components.

a. Condenser Air Removal (ARC, 5-1)

1) 2ARC-FS8A, 2ARC-FS8B, 2ARC-SOV18A, 2ARC-SOV18B

Failure Effect

Failure of these devices will affect the operation of the condenser air removal pumps or may affect the supply of water to the condenser air removal pump discharge separator tanks. Since the air removal pumps are in service during plant startup only, this event has no significant effect during normal plant operation when air ejectors are in service.

2) 2ARC-AOV105, 2ARC-SOV105

Failure Effect

This valve is required to remove air and noncondensable gases during startup. Therefore, failure of this valve in either position will not pose any significant effect.

b. Auxiliary Steam (ASS, 3-9)

1) 2ASS-AOV147, 2ASS-SOV147, 2ASS-PC107, 2ASS-PC139

Failure Effect

If the above pressure controllers cause either or both of the pressure control valves (2ASS-PV107 or 2ASS-PV139) to fail close, then the main steam supply to the condenser air removal system may be reduced or lost. If the auxiliary steam inlet valve to steam jet air ejectors 2ASS-AOV147 also fails close, then the condenser air removal backup system is lost. Loss of condenser vacuum will result.

2) 2ASS-PV140, 2ASS-SOV138

Failure Effect

If either valve from the auxiliary steam system backup supply fails close, the main steam normal supply pressure control valve 2ASS-PV125, in a different zone (N) from the main steam supply to the preheaters 20FG-E1A and 20FG-E1B, will continue to supply the offgas preheaters.

If both valves fail open, increasing the pressure to the offgas preheaters and therefore increasing the flow to the condenser, the offgas temperature to the recombiners 20FG-RBNR1A and 20FG-RBNR1B will be elevated.

c. Turbine Plant Component Cooling Water (CCS, 9-7)

1) 2CCS-AOV105, 2CCS-SOV105, 2CCS-LS105

Failure Effect

If the valve 2CCS-AOV105 fails in closed position at low level in the surge and makeup tank 2CCS-TK1, closed loop cooling water pumps 2CCS-P1A, B, C may trip on low suction pressure causing possible loss of closed loop cooling water in turbine building which may ultimately cause runback/trip of turbine or loss of coolant in generator winding.

2) 2CCS-I/P32A, 2CCS-TV32A, 2CCS-I/P32B, 2CCS-TV32B

Failure Effect

Failure of exciter cooler temperature control valve 2CCS-TV32A and 2CCS-TV32B in closed position will result in exciter alternator cooler high temperature. This will require some operator action.

3) 2CCS-I/P109, 2CCS-TV109

Failure Effect

Failure of hydrogen cooler temperature modulating valve 2CCS-TV109 in closed position will result in loss of cooling water to generator hydrogen coolers. This will result in increased generator stator winding temperature. Higher stator winding temperature will result in turbine runback.

4) 2CCS-PS102, 2CCS-PS17A, 2CCS-PS17B, 2CCS-PS17C

Failure Effect

If any of the above instruments fail, closed loop cooling water pumps 2CCS-P1A, 2CCS-P1B, or 2CCS-P1C may fail to start or fail to trip or may start or trip inadvertently. If the above reduces the number of turbine building closed loop cooling water pumps in service, a reduction or loss of closed loop cooling will occur. If the above fails to trip the respective pump, then after a period of time the pump or pumps could be damaged and cause a reduction or loss of closed loop cooling.

5) 2CCS-I/P104, 2CCS-TV104

Failure Effect

If the bypass portion of 2CCS-TV104 fails open bypassing turbine plant component cooling water heat exchangers, this results in higher component cooling water temperature.

6) 2CCS-TV15A, 2CCS-TV15B, 2TMB-TIC1A, 2TMB-TIC1B

Failure Effect

If these valves fail close, cooling to the turbine electrohydraulic fluid control system will be lost. This will have no significant short-term impact.

d. Condensate Demineralizer (CND, 4-7)

2CND-AOV333

Failure Effect

Failure of 2CND-AOV333 in open or close position has no significant effect.

e. Condensate (CNM, 4-1)

1) 2CNM-I/P137

Failure Effect

Failure of startup bypass valve 2CNM-LV137 in open or close position will have no affect on feedwater pumps.

2) 2CNM-FT114, 2CNM-I/P114

Failure Effect

If the failure of the transmitter 2CNM-FT114 leads to the failure of the valve 2CNM-FV114 to open position, reduction of condensate/feedwater flow will result.

3) 2CNM-AOV109, 2CNM-SOV109A, 2CNM-SOV109B

Failure Effect

If these devices fail, some condensate flow may bypass the condensate polisher. This has no significant short-term effect. If 2CNM-AOV109 is prevented from opening following turbine trip, however, the requirement for 115 percent feedwater flow to the reactor following turbine trip cannot be met, and initiation of the reactor core isolation cooling system will occur on low reactor water level.

4) 2CNM-PS73A, 2CNM-PS73B, 2CNM-PS73C, 2CNM-PS74A, 2CNM-PS74B, 2CNM-PS74C, 2CNM-FT68A, 2CNM-FT68B, 2CNM-FT68C

Failure Effect

Failure of the above instruments will cause the reactor feed pumps to trip, resulting to a total loss of reactor feedwater.

5) 2CNM-PS39A, 2CNM-PS39B, 2CNM-PS39C, 2CNM-PS42A, 2CNM-PS42B, 2CNM-PS42C

Failure Effect

Failure of any or all of the above instruments during the normal operation will cause the selected standby condensate pump to fail to start and also will cause the operating condensate booster pumps to trip resulting in a total loss of reactor feedwater.

6) 2CNM-FT38A, 2CNM-I/P38A, 2CNM-I/P38B, 2CNM-I/P38C, 2CNM-FT38B, 2CNM-FT38C

Failure Effect

If the above instrumentation fails and causes any or all of the condensate booster pump recirculation valves 2CNM-FV38A, 2CNM-FV38B, and 2CNM-FV38C to open, then condensate flow will be decreased.

If the above instrumentation fails any or all of the condensate booster pump recirculation valves close, then the booster pumps may become subject to a lack of flow and be damaged if the condensate demand diminishes.

f. Condensate Booster Pump Lube Oil System (CNO, 4-10)

2CNO-PS1A, 2CNO-PS1B, 2CNO-PS1C, 2CNO-PS2A, 2CNO-PS2B, 2CNO-PS2C, 2CNO-PS9A, 2CNO-PS9B, 2CNO-PS9C

Failure Effect

Failure of the above condensate booster pump pressure switches may cause a trip of the running condensate booster pumps or associated electric lube oil pumps, and/or may block automatic start of the standby condensate booster pump. This will result in partial or total loss of feedwater flow to the reactor.

g. Condensate Makeup/Drawoff (CNS, 4-3)

1) 2CNS-LV103

Failure Effect

Failure of the valve 2CNS-LV103 in closed position will result in reduced condensate inventory from normal condensate makeup system to the main condenser.

2) 2CNS-LIC103, 2CNS-LIC105, 2CNS-LSL103

Failure Effect

If the failure of the above instruments drives the valves 2CNS-LV103 and 2CNS-AOV304 in closed position and 2CNS-LV105 in open position, condensate inventory in the condenser will be affected, which may cause reduction in feedwater in the reactor.

h. Moisture Separator Vents and Drains (DSM, 32-7)

1) 2DSM-I/PX75A, 2DSM-I/PY75A, 2DSM-I/PZ75A, 2DSM-I/PX75B, 2DSM-I/PY75B, 2DSM-I/PZ75B

Failure Effect

If the instrumentation fails any or all valves 2DSM-LVX75A, 2DSM-LVY75A, 2DSM-LVZ75A, 2DSM-LVX75B, 2DSM-LVY75B, or 2DSM-LVZ75B in closed position, partial loss of feedwater heating at fourth pointer will result.

2) 2DSM-I/P78B, 2DSM-LT78B

Failure Effect

If 2DSM-LT78B fails 2DSM-LV78B in open position, condensate from 2DSM-TK4B will drain from 2DSM-TK4B to main condenser, causing partial loss of feedwater heating at fourth point heater 2CNM-E4A, E4B, or E4C.

3) 2DSM-I/P78A, 2DSM-LT78A

Failure Effect

Same as above item 2) except for A valves and tank.

4) 2DSM-LT75B

Failure Effect

If this transmitter fails causing closure of control valves 2DSM-LVX75B, 2DSM-LVY75B, and 2DSM-LVZ75B which supply heating to the fourth point feedwater heaters 2CNM-E4A, 2CNM-E4B, and 2CNM-E4C from moisture separator drain receiver 2CNM-TK4B, partial loss of fourth point feedwater heating will result.

5) 2DSM-LT75A

Failure Effect

Same as above item 4) except for A loop.

6) 2DSM-LS70A, 2DSM-LS70B

Failure Effect

If the above level switches fail in such a direction as to signal false high level in the moisture separator reheaters, a turbine trip will result.

If the level switches fail such that a high level in the moisture separator reheater is not detected, water induction into the high pressure turbine may result. This may cause excessive turbine vibration leading to turbine trip.

i. Moisture Separator Reheater Vents and Drains (DSR, 32-6)

1) 2DSR-I/PX65A, 2DSR-I/PY65A, 2DSR-I/PZ65A, 2DSR-I/PX65B, 2DSR-I/PY65B, 2DSR-I/PZ65B

Failure Effect

If the instrumentation fails any or all valves, 2DSR-LVX65A, 2DSR-LVY65A, 2DSR-LVZ65A, 2DSR-LVX65B, 2DSR-LVY65B, or 2DSR-LVZ65B in closed position partial loss of feedwater heating at sixth point heater results.

2) 2DSR-PT78A, 2DSR-PT78B

Failure Effect

If these instruments fail and cause scavenging steam valve 2DSR-MOV68A (2DSR-MOV68B) to fail in the close position, then sixth point feedwater heating will be reduced.

3) 2DSR-I/P68A, 2DSR-I/P68B, 2DSR-LT68A, 2DSR-LT68B

Failure Effect

If this instrumentation causes failure of 2DSR-LV68A (2DSR-LV68B) in the open position, condensate from 2DSR-TK6A (2DSR-TK6B) will drain to the main condenser, resulting in partial loss of heating at sixth point heaters 2FWS-E6A, 2FWS-E6B, and 2FWS-E6C.

4) 2DSR-LT65A, 2DSR-LT65B

Failure Effect

Failure of these devices which cause closure of control valves 2DSR-LVX65A (2DSR-LVX65B), and 2DSR-LVY65A (2DSR-LVY65B) which supply heating to the sixth point feedwater heaters 2FWS-E6A, 2FWS-E6B, 2FWS-E6C from moisture separator reheater drain receiver tank 2DSR-TK6A (2DSR-TK6B), will result in reduction of sixth point feedwater heating.

j. Extraction Steam (ESS, 3-4)

1) 2ESS-PS110, 2ESS-PS115

Failure Effect

Failure of these instruments will fail control valve 2ESS-STV105 either open or close. This will affect the backup steam supply to building heating intermediate heat exchangers 2HVH-E1A and 2HVH-E1B. No significant impact on the system will occur.

2) 2ESS-PS112, 2ESS-PS116

Failure Effect

Inadvertent failure of 2ESS-PS112 and/or 2ESS-PS116 may cause failure of 2ESS-STV104 in closed position which will stop extraction steam to clean steam reboilers. Clean steam reboiler has alternate sources of steam available from main steam or auxiliary steam. In the event both main steam isolation valve 2ASS-STV112 and auxiliary steam supply valve 2ASS-PV146 are closed, turbine generator gland sealing steam would be lost. This may result in gradual loss of condenser vacuum.

k. FDW Pump and Drive Lube Oil (FWL, 7-3)

2FWL-PS1A, 2FWL-PS1B, 2FWL-PS1C, 2FWL-PS2A, 2FWL-PS2B, 2FWL-PS2C

Failure Effect

Instrumentation failure may cause either inadvertent feedwater pump trip or failure to trip feedwater pump on extreme low lube oil pressure.

l. FDW Pump Seal and Leakoff (FWP, 6-4)

2FWP-PCV5A, 2FWP-PDIC5A, 2FWP-PDK5A, 2FWP-PDT5A, 2FWP-PCV5B, 2FWP-PDIC5B, 2FWP-PDK5B, 2FWP-PDT5B, 2FWP-PCV5C, 2FWP-PDIC5C, 2FWP-PDK5C, 2FWP-PDT5C, 2FWP-PS5A, 2FWP-PS5C

Failure Effect

Failure of the above instrument will cause loss of reactor feedwater pumps bearing seal water. This event has no significant effect.

m. FDW Pump Recirculation (FWR, 6-3)

2FWR-I/P2A, 2FWR-I/P2B, 2FWR-I/P2C

Failure Effect

Failure of these instruments causes recirculation valve 2FWR-FV2A, B, C to open, thus reducing the feedwater flow to the reactor.

If failure of these instruments causes the recirculation valve 2FWR-FV2A, B, C to close, feedwater pump minimum recirculation requirement may not be met.

n. Feedwater (FWS, 6-1)

1) 2FWS-I/PX113, 2FWS-I/PY113, 2FWS-PS112, 2FWS-PS113

Failure Effect

Failure of the above instrumentation can cause low energy cleanup valves 2FWS-HVX113 and 2FWS-HVY113 to open. Failure of 2FWS-HVX113 or 2FWS-HVY113 in open position has no effect during normal plant operation unless 2FWS-MOV112 fails open due to failure of pressure switch 2FWS-PS112 or 2FWS-PS113 and inadvertent operator action to open 2FWS-MOV112 from main control room. This will divert feedwater flow to the main condenser and not to the reactor.

2) 2FWS-I/PX111, 2FWS-I/PY111, 2FWS-I/PZ111

Failure Effect

If the above instruments cause high energy feedwater cycle cleanup control valves 2FWS-HVX111, 2FWS-HVY111, and 2FWS-HVZ111 to open during normal plant operation, no effect will result unless the 2FWS-MOV110 in zone C is inadvertently open. If the MOV which is manually controlled from the main control is open, then a significant amount of feedwater flow will be diverted to the condenser and not to the reactor.

3) 2FWS-HV105, 2FWS-SOV105

Failure Effect

If this instrument fails in the open position, insignificant amount of feedwater to the reactor vessel will be diverted to the condenser. This valve is on 3/4 in. line.

4) 2FWS-LV10A, 2FWS-LV10B, 2FWS-LV10C, 2FWS-FT1A, 2FWS-FT1B

Failure Effect

If these valves fail open, in the worst case a reactor vessel high level will result, causing reactor scram, turbine trip, and main feedwater pump trip. If one or more of these valves fail closed, a decrease in reactor water level may occur. Recirculation pump runback will occur at level 4, and a reactor scram and turbine trip will occur if reactor vessel level 3 is reached. Similar sequence will occur upon failure of the above flow transmitters which provide signals to the feedwater level control system.

5) 2FWS-LV55A

Failure Effect

This valve is normally closed. If the valve were to open there would be no effect since the feedwater control system would close 2FWS-LV10A (C33-F001A) to maintain proper flow.

o. Generator Stator Cooling Water (GMC, 16-8)

1) 2GMC-TV101, 2GMC-PDC102

Failure Effect

Failure of the temperature control valve may cause the stator cooling water to bypass the coolers resulting in higher inlet/outlet stator coolant temperature which could result in reduction of generator output.

If the valve 2GMC-PDV102 fails in closed position causing total loss of generator coolant, turbine runback/trip will occur.

2) 2GMC-FS140, 2GMC-FV127, 2GMC-FV128, 2GMC-PDV102, 2GMC-PNL141, 2GMC-PS103, 2GMC-PS105, 2GMC-PS139, 2GMC-PS6A, 2GMC-PS6B, 2GMC-SOV130, 2GMC-TIC101, 2GMC-TS109

Failure Effect

Failure of the above devices may result in the loss of the generator stator cooling water system. This will result in turbine runback and may result in turbine trip if generator armature current is not reduced after 3.5 minutes.

p. Generator Hydrogen and CO_2 (GMH, 16-7)

1) 2GMH-AOV162, 2GMH-SOV162, 2GMH-PS174

Failure Effect

If this valve fails open, the generator hydrogen supply will be vented to atmosphere and eventually generator hydrogen pressure and cooling will be lost reducing generator output.

2) 2GMH-AOV119, 2GMH-SOV119, 2GMH-PCV111, 2GMH-PV117, 2GMH-PT117

Failure Effect

If either valve fails close, the generator hydrogen supply will not be available for replenishing generator hydrogen pressure lost through control of these valves. However, the operator can bypass these valves manually.

3) 2GMH-SOV173

Failure Effect

This valve is normally deenergized (closed) and is energized manually by operator only when the generator gas analyzer is in standby. Failure of this valve in the open position would result in a very small loss of hydrogen sample gas to atmosphere within the makeup capability of the hydrogen storage system. Therefore, failure has no effect.

q. Generator Leads Cooling (GML, 16-10)

2GML-FS1A, 2GML-FS1B

Failure Effect

If these instruments fail indicating low air flow after a time delay, the generator leads cooling fans 2GML-FN1A, -FN1B will be stopped causing a loss of generator lead cooling.

r. Generator Seal Oil (GMO, 16-6)

1) 2GMO-PS102

Failure Effect

If this pressure switch should fail, such that it did not sense main seal oil pressure low and did not start the emergency seal oil pump 2GMO-P2, the emergency seal oil pump would not start.

2) 2GMO-LV115, 2GMO-PCV116, 2GMO-SOV117

Failure Effect

If the above valves fail close, then seal oil will be lost to the main generator seal oil system.

s. High-Pressure FDW Heater Drains (HDH, 6-6)

2HDH-LIC26A, 2HDH-LIC26B, 2HDH-LIC26C, 2HDH-LIC6A, 2HDH-LIC6B, 2HDH-LIC6C, 2HDH-LSH26A, 2HDH-LSH26B, 2HDH-LSH26C

Failure Effect

If the above level instrumentation fail their respective level valves open, which drain the sixth point high pressure feedwater heaters (2FWS-E6A, 6B, 6C) to the condenser, then partial loss of sixth point high pressure feedwater heating will result.

t. Low Pressure Feedwater Heater Drains (HDL, 4-2)

1) 2HDL-I/P35A, 2HDL-I/P35B, 2HDL-I/P35C, 2HDL-FT35A, 2HDL-FT35B, 2HDL-FT35C

Failure Effect

If the above valves fail in full open position, heater drain pump discharge flow to the condensate system will be reduced, thus causing partial loss of feedwater.

If the above valves fail in closed position it may result in heater drain pump overheating in low flow condition.

2) 2HDL-I/P4A, 2HDL-I/P4B, 2HDL-I/P4C, 2HDL-LT4A, 2HDL-LT4B, 2HDL-LT4C

Failure Effect

If the above instrumentation fails level control valves (2HDL-LV4A, B, C) for the fourth point heaters (2CNM-E4A, B, C) in the open position, the heater drain pumps (2HDL-P1A, B, C) will eventually be tripped on low suction pressure, to loss of fourth point heater condensate inventory causing pump failure. If valves fail closed, then a loss of feedwater heater drain flow to the condensate system will occur.

3) 2HDL-PS50A, 2HDL-PS50B, 2HDL-PS50C

Failure Effect

If the above instrumentation fails, causing fourth point heater drain pumps (2HDL-P1A, P1B, P1C) to stop, then partial feedwater flow will be lost.

4) 2HDL-LIC22A, 2HDL-LIC22B, 2HDL-LIC22C, 2HDL-LIC23A, 2HDL-LIC23B, 2HDL-LIC23C, 2HDL-LIC24A, 2HDL-LIC24B, 2HDL-LIC24C, 2HDL-LIC25A, 2HDL-LIC25B, 2HDL-LIC25C, 2HDL-LIC2A, 2HDL-LIC2B, 2HDL-LIC2C, 2HDL-LIC3A, 2HDL-LIC3B, 2HDL-LIC3C, 2HDL-LIC5A, 2HDL-LIC5B, 2HDL-LIC5C, 2HDL-LV3A, 2HDL-LV3B, 2HDL-LV3C

Failure Effect

If the above level instruments fail their respective level valves open which drain the second, third, fourth, and fifth point low pressure feedwater heaters or drain receiver tanks (2HDL-TK2A, 2B, 2C; 2CNM-E3A, 3B, 3C; 2CNN-E4A, 4B, 4C; 2CNM-E5A, 5B, 5C) to the condenser, then partial loss of low pressure feedwater heating will result. However, if two of the three fourth point heaters drain to the condenser through their respective level valves, which fail open, then respective heater drain pumps will eventually trip causing loss of feedwater flow.

u. Main Steam (MSS, 3-1)

1) 2MSS-PT103

Failure Effect

Failure of this pressure transmitter can result in the opening of numerous main and auxiliary startup drain lines to the main condenser. This will cause bypassing of steam to the main condenser during normal operation, but will have no significant effect on reactor parameters.

2) 2MSS-PT104

Failure Effect

Failure of this device may result in the opening of main steam line startup drain valves 2MSS-AOV85A through D. The resulting bypassed steam to the main condenser will have no significant effect on reactor parameters. Also, failure of this device may prevent condensate demineralizer bypass valve 2CNM-AOV109 from opening following turbine trip. In this event, the requirement for 115 percent feedwater flow to the reactor following turbine trip cannot be met, and initiation of the reactor core isolation cooling system will occur on low reactor water level. If turbine trip does not occur, partial loss of condensate polishing will occur. This has no significant effect.

v. Service Water (SWP, 9-10)

2SWP-HV98A, 2SWP-SOV98A, 2SWP-HV98B, 2SWP-SOV98B

Failure Effect

If the above valve fails in closed position, service water flow to the vacuum pump seal water coolers will be lost resulting in loss of cooling of the vacuum pumps 2ARC-E1A and 2ARC-E1B seal water. This will not have any effect on reactor parameters directly or indirectly because the vacuum pumps will be used only during startup.

w. Turbine Generator EH Fluid (TMB, 16-5.2)

1) 2TMB-PS130

Failure Effect

Failure of this device which causes opening of 2MSS-MOV21A, 2MSS-MOV21B, 2MSS-MOV21C, and 2MSS-MOV21C results in bypassing an insignificant amount of main steam to the main condenser through a 2-inch line.

Failure of this device may also cause misoperation of 2DSR-AOV82A, 2DSR-AOV82B, 2DSR-AOV83A, 2DSR-AOV83B, 2DSR-AOV84A, 2DSR-AOV84B, 2DTM-AOV105, 2DTM-AOV166, 2MSS-AOV191, 2MSS-AOV194, 2MSS-AOV203, 2MSS-AOV205, and/or 2MSS-AOV209 which results in an insignificant impact.

2) 2TMB-SOV121, 2TMB-TS101, 2TMB-TS116

Failure Effect

Failure of these devices may affect EHC fluid test functions or cooling of the EHC fluid reservoir. These failures have no significant effect.

x. Turbine Generator Gland Seal and Exhaust (TME, 16-1)

2TME-LS130

Failure Effect

Failure of this device has no significant effect in the short term.

y. Turbine Generator Lube Oil (TML, 16-2)

2TML-SS1A, 2TML-SS1B

Failure Effect

Misoperation of the above switches has no significant impact.

3. Combined Effect

a. A break in the condenser air removal high energy line in this zone (Item 1.a.1) will result in loss of main condenser offgas treatment and gaseous release in the turbine building. This event is bounded by FSAR Section 15.7 analyses. Upon detection of turbine building high radiation, due to potential loss of offgas system, the operator should manually isolate the offgas system and scram the reactor.

Failure of control components in this zone can result in partial or total loss of feedwater flow to the reactor. This will

lead to reactor low water level with subsequent scram and initiation of reactor core isolation cooling. This event is bounded by FSAR Section 15.2.7 analyses. If the failure affects components in the feedwater level control system, a high reactor water level may occur with subsequent reactor scram, turbine trip, and feedwater pump trip. This event is bounded by FSAR Section 15.1.2 analyses.

If the reactor is operating at 100 percent power at the time the operator initiates a manual scram due to loss of offgas, the condensate demineralizer bypass valve (2CNM-AOV109) instrumentation may cause the valve not to open. In this case, the requirement to attain 115 percent feedwater flow after turbine trip may not be met. Therefore, a normal post-trip transient will not occur. Instead, reactor vessel level will decrease and the reactor core isolation cooling system will initiate. This event is bounded, however, by FSAR Section 15.6.6 analyses.

Failure of certain other control components in this zone (Items 2.h.1 through 2.h.5, 2.i.1 through 2.i.4) may result in partial loss of feedwater heating. These failures may include partial loss from the fifth and sixth point feedwater heaters affecting as many as three heater strings. Failure of other control components in this zone (Item 2.t) may result in partial loss of feedwater heating from second and third point heater drain coolers and fifth point heaters in all three heater strings and in only one of three fourth point heaters. This event is bounded by FSAR Section 15.1.1 analysis. If subsequent turbine trip occurs due to failure of other control components (Item 2.h.6) or due to manual action by the operator to scram on loss of offgas, the trip may occur at a reactor power level elevated from the initial operating value due to the loss of feedwater heating. In this event, the reactor may experience a change in critical power ratio greater than that described in the unacceptable results of moderate frequency (anticipated operational transients) of FSAR Section 15.1.1. See Section 3.0 for further discussion.

Several other events which may occur as a result of control component failure may lead to turbine runback or operator action to reduce turbine load. This is a less severe transient than those discussed, and provides a more conservative initial condition for any other subsequent events which may occur.

b. 1) A break in the auxiliary steam high energy lines in this zone (Items 1.b.1, 1.b.3, and 1.b.4) will result in loss of offgas treatment capability or reduction in treatment efficiency which will ultimately lead to system shutdown and manual reactor scram by the operator. This event is bounded by FSAR Section 15.7 analyses.

For control component failure analysis in this zone, see Item 3.a.

2) A break in the auxiliary steam high energy line in this zone (Item 1.b.2) will result in a loss of condenser vacuum. This event is bounded by FSAR Section 15.2.5 analyses. For an analysis of control component failures in this zone, see Item 3.a.

c. 1) A break in the auxiliary condensate high energy lines in this zone (Item 1.c.1) will result in a loss of main condenser vacuum. This event is bounded by FSAR Section 15.2.5 analyses. For analysis of control component failures, refer to Item 3.a.

2) A break in the auxiliary condensate high energy lines in this zone (Items 1.c.2, 1.c.3, and 1.c.4) will cause a partial loss of condensate, which will have no significant short-term effect. This event may also result in a partial loss of feedwater heating at third point feedwater heaters, which is bounded by FSAR Section 15.1.1 analyses. For analysis of control component failures, refer to Item 3.a above.

d. 1) A break in the condensate high energy line in this zone (Item d.1 through d.5, d.8) will result in total loss of feedwater flow. This event is bounded by FSAR Section 15.6.6 analyses (feedwater break outside containment). Control component failure does not exacerbate this event.

2) A break in the condensate high energy lines in this zone (Item 1.d.8, 1.d.9, and 1.d.10) will result in loss of condensate inventory. If the rate of such loss exceeds the makeup capability of the condensate makeup system, the result will be a total loss of condensate and feedwater flow due to condensate or feedwater pump suction pressure trip. This event is bounded by FSAR Section 15.2.7 analyses. It should be noted that Item 1.d.8 will also cause a loss of the condensate supply to the control rod drives, which will prevent normal control motion. This has no significant short-term effect; refer to Appendix D, Zone B, Item 3.e.2 for a detailed analysis of longer-term effects.

For analysis of control component failures, refer to Item 3.a above.

3) A break in the condensate high energy line in this zone (Item 1.d.7) will cause a loss of condensate to the turbine generator hood spray temperature control valve 2CNM-TV121. Since hood spray is required primarily during startup and low load, loss of hood sprays during normal operation will have no significant effect on the turbine. A partial loss of condensate inventory will occur, however; refer to Item 3.d.2 for analysis of this event.

4) A break in the condensate high-energy lines in this zone (Item 1.d.6, 1.d.11) will cause loss of sealing water to the condensate and/or feedwater pump seals. This may cause loss of pump suction pressure and pump trip, resulting in a loss of feedwater. This event is bounded by FSAR Section 15.2.7 analyses. For a discussion of control component failures, refer to Item 3.a.

5) A break in the condensate high-energy line in this zone (Item 1.d.10) results in condensate to turbine generator gland seal and exhaust reboiler, causing a loss of turbine generator gland seal and exhaust steam and loss of condensate inventory.

A backup source of main steam is available for turbine generator gland seal and exhaust steam. For loss of condensate inventory analysis and control component failure, refer to Item d.2.

e. 1) A break in turbine building miscellaneous drains high-energy line in this zone (Item 1.e.1) results in loss of main condenser vacuum. This event is bounded by FSAR Section 15.2.5 analyses. For an analysis of control component failures in this zone see Item 3.a.

2) A break in turbine building miscellaneous drains high-energy line in this zone (Item 1.e.2, 1.e.3, 1.e.4, 1.e.5) will result in partial loss of feedwater heating at fourth, fifth, or sixth point heaters. Loss of feedwater heating event is bounded by FSAR Section 15.1.1 analyses. Refer to Item 3.a for control component failure analyses.

f. A break in feedwater pump seal and leakoff high-energy line in this zone will cause loss of sealing water to the feedwater pump. Refer to Item d.4 for further analyses.

g. A break in feedwater recirculation high-energy line in this zone will result in loss of feedwater flow. This is a feedwater pipe break outside containment bounded by FSAR Section 15.6.6 analyses. Failure of control components does not exacerbate this event.

h. A break in feedwater high energy line in this zone will result in total/partial loss of feedwater flow. This is a feedwater pipe break outside containment bounded by FSAR Section 15.6.6. analyses. Failure of control components does not exacerbate this event.

i. A break in high pressure feedwater heater drains high-energy line in this zone will result in loss of feedwater heating at sixth point heater. Loss of feedwater heating event is bounded by FSAR Section 15.1.1 analyses. Refer to Item 3.a for control component failure analyses.

j. A break in low pressure feedwater heater drains high energy line in this zone will result in loss of feedwater heating at second, third, fourth, or fifth point heaters. Loss of feedwater heating event is bounded by FSAR Section 15.1.1 analyses. Refer to Item 3.a for control component failure analyses.

k. A break in glycol heating high-energy line in this zone has no effect on reactor parameters. Refer to Item 3.a for control component failure analyses.

l. A break in hot water heating high energy line in this zone has no effect on reactor parameters. Refer to Item 3.a for control component failure analyses.

m. A break in offgas high energy line in this zone results in loss of main condenser vacuum bounded by FSAR Section 15.2.5 analyses. Refer to Item 3.a for control component failure analyses.

n. A break in feedwater heater relief vents and drains high energy line in this zone results in loss of main condenser vacuum bounded by FSAR Section 15.2.5 analyses. Refer to Item 3.a for control component failure analyses.

o. A break in turbine generator gland seal and exhaust high-energy line in this zone results in loss of main condenser vacuum bounded by FSAR Section 15.2.5 analyses. Refer to Item 3.a for control component failure analyses.

APPENDIX D

HIGH ENERGY LINE BREAK ANALYSIS

ZONE F

Building: Turbine Building
Location: El 277 ft 6 in. and 250 ft 0 in. Tunnels

HELB System			Control System		
1.	CNA (4-4)	Auxiliary Condensate	2.	CNM (4-1)	Condensate
	CNM (4-1)	Condensate		DSM (32-7)	Moisture Separator Vents and Drains
	DSM (32-7)	Moisture Separator Vents and Drains		DSR (32-6)	Moisture Separator Reheater Vents and Drains
	DSR (32-6)	Moisture Separator Reheater Vents and Drains		FWS (6-1)	Feedwater
	ESS (3-4)	Extraction Steam		HDH (6-6)	High Pressure Feedwater Heater Drain
	FWS (6-1)	Feedwater		HDL (4-2)	Low Pressure Feedwater Heater Drain
	HDH (6-6)	High Pressure Feedwater Heater Drain		SVH (32-14)	FDW Heater Relief Vents and Drains
	HDL (4-2)	Low Pressure Feedwater Heater Drains			
	SVH (32-14)	FDW Heater Relief Vents and Drains			

1. The following is a list of high energy lines analyzed on a system basis:

   a. Auxiliary Condensate (CNA, 4-4)

      Line No. 2CNA-003-414-4

      Function

      Reboiler drain tanks 2CNA-TK1A, 2CNA-TK1B
      Discharge line to third point heater 2CNM-E3A

Failure Effect

Partial loss of feedwater heating in the third point heaters 2CNM-E3A, B, and C.

b. Condensate (CNM, 4-1)

1) Line No. 2CNM-018-76-4 2CNM-018-44-4, 2CNM-018-47-4, 2CNM-018-53-4, 2CNM-018-56-4, 2CNM-012-324-4, 2CNM-018-327-4, 2CNM-018-59-4, 2CNM-020-79-4, 2CNM-020-62-4

Function

Feedwater piping for low pressure heater string "A."

Failure Effect

Partial or total loss of feedwater.

2) Line No. 2CNM-002-226-4

Function

Reactor Feed Pump 2FWS-P1A isolation valve 2CNM-MOV84A bypass line

Failure Effect

Partial loss of feedwater

3) Line No. 2CNM-024-84-4

Function

Reactor Feed Pump 2FWS-P1A inlet piping.

Failure Effect

Partial loss of feedwater.

4) Line Nos. 2CNM-030-042-4, 2CNM-024-043-4

Function

Condensate booster pumps 2CNM-P2A, B, and C discharge header.

Failure Effect

Total loss of feedwater.

5) Line No. 2CNM-012-65-4

Function

Fourth point heater drain pump 2HDC-P1A discharge line to the condensate system.

Failure Effect

Partial loss of feedwater flow.

c. Moisture Separator Vents and Drains (DSM, 32-7)

Line No. 2DSM-010-44-4, 2DSM-010-46-4

Function

Moisture separator drain receiver 2DSM-TK4A and B drain lines to the fourth point heater 2CNM-E4A

Failure Effect

Partial loss of feedwater heating in the fourth point heater 2CNM-E4A.

d. Moisture Separator Reheater Vents and Drains (DSR, 32-6)

1) Line No. 2DSR-010-28-4, 2DSR-010-30-4

Function

Reheater drain receiver 2DSR-TK6A and B drain lines to the sixth point heater 2FWS-E6A.

Failure Effect

Partial loss of feedwater heating in the sixth point heater 2FWS-E6A.

2) Line No. 2DSR-008-104-4

Function

Reheater drain receiver 2DSR-TK6A vent line to the sixth point heaters inlet header.

Failure Effect

Partial loss of feedwater heating in the sixth point heaters 2FWS-E6A, B, C.

3) Line No. 2DSR-012-118-4

Function

Reheater drain receivers 2DSR-TK6A, B vent lines header to the sixth point heaters 2FWS-E6A, B, C.

Failure Effect

Partial loss of feedwater heating in the sixth point heater 2FWS-E6A, B, C.

4) Line No. 2DSR-012-112-4

Function

Sixth point heater inlet piping from reheater drain receivers 2DSR-TK6A, B vent line header.

Failure Effect

Partial loss of feedwater heating in the sixth point heater 2FWS-E6A.

e. Extraction Steam System (ESS, 3-4)

1) Line No. 2ESS-012-5-4

Function

Extraction steam line to the sixth point heater 2FWS-E6A.

Failure Effect

Loss of feedwater heating in the sixth point heaters 2FWS-E6A, B, C.

2) Line No. 2ESS-016-16-4

Function

Cold reheat steam line to the fifth point heater 2CNM-E5A.

Failure Effect

Loss of feedwater heating in the fifth point heaters 2CNM-E5A, B, C.

3) Line No. 2ESS-014-24-4

Function

Extraction steam line to the fourth point heater 2CNM-E4A.

Failure Effect

Loss of feedwater heating in the fourth point heater 2CNM-E4A.

4) Line No. 2ESS-026-34-4

Function

Extraction steam line to the third point heater 2CNM-E3A.

Failure Effect

Loss of feedwater heating in the third point heater 2CNM-E3A.

f. Feedwater System (FWS, 6-1)

1) Line No. 2FWS-024-7-4, 2FWS-020-38-4, 2FWS-020-8-4

Function

Reactor feed pump 2FWS-P1A discharge line.

Failure Effect

Loss of feedwater flow.

2) Line No. 2FWS-024-19-4

Function

Reactor feed pumps 2FWS-P1A, B, C discharge header.

Failure Effect

Loss of feedwater flow.

3) Line No. 2FWS-006-91-4

Function

Startup line for the reactor feedpump 2FWS-P1A.

Failure Effect

Partial loss of feedwater flow.

g. High Pressure Feedwater Heater Drain (HDH, 6-6)

1) Line Nos. 2HDH-004-607, 2HDH-002-605-4, 2HDH-002-606-4

Function

Sixth point heater 2FWS-E6A standpipe and standpipe connection for level measurement.

Failure Effect

Partial loss of feedwater heating in the sixth point heater 2FWS-E6A due to the loss of extraction steam and condensate.

2) Line No. 2HDH-012-601-4

Function

Sixth point heater 2FWS-E6A drain line to the fifth point heater 2CNM-E5A.

Failure Effect

Partial loss of feedwater heating in the sixth point heater 2FWS-E6A and the fifth point heater 2CNM-E5A.

3) Line No. 2HDH-014-603-4

Function

Sixth point heater 2FWS-E6A drain line to the main condenser.

Failure Effect

Loss of condenser vacuum.

h. Low Pressure Feedwater Heater Drain (HDL, 4-2)

1) Line No. 2HDL-008-301-4

Function

Third point heater 2CNM-E3A drain line to the drain cooler 2HDL-DCL3A.

Failure Effect

Partial loss of feedwater heating in the third point heater 2CNM-E3A due to the loss of condensate.

2) Line No. 2HDL-008-302-4

Function

Third point heater 2CNM-E3A drain line to the main condenser.

Failure Effect

Loss of condenser vacuum.

3) Line No. 2HDL-004-308-4, 2HDL-002-306-4, 2HDL-002-307-4

Function

Third point heater 2CNM-E3A standpipe and standpipe connections for level measurement.

Failure Effect

Partial loss of feedwater heating in third point heater 2CNM-E3A due to loss of extraction steam and condensate.

4) Line No. 2HDL-014-401-4

Function

Fourth point heater 2CNM-E4A discharge line to heater drain pump 2HDL-P1A.

Failure Effect

Partial loss of feedwater heating in the fourth point heater 2CNM-E4A and loss of condensate.

5) Line No. 2HDL-018-402-4

Function

Fourth point heater 2CNM-E4A drain line to the main condenser.

Failure Effect

Loss of consenser vacuum.

6) Line No. 2HDL-008-411-4, 2HDL-008-414-4

Function

Fifth point heater 2CNM-E5A drain lines to the fourth point heater 2CNM-E4A.

Failure Effect

Partial loss of feedwater heating in the fourth point heater 2CNM-E4A.

7) Line No. 2HDL-002-406-4

Function

Vent line from heater drain pump 2HDL-P1A to the fourth point heater 2CNM-E4A.

Failure Effect

Partial loss of feedwater heating in the fourth point heater 2CNM-E4A due to loss of condensate.

8) Line Nos. 2HDL-004-410-4, 2HDL-002-408-4, 2HDL-002-409-4

Function

Fourth point heater 2CNM-E4A standpipe and standpipe connections for level measurement.

Failure Effect

Partial loss of feedwater heating in the fourth point heater 2CNM-E4A due to loss of extraction steam and condensate.

9) Line No. 2HDL-006-412-4

Function

Heater drain pump 2HDL-P1A recirculation line to fourth point heater 2CNM-E4A.

Failure Effect

Partial loss of feedwater heating in the fourth point heater 2CNM-E4A due to loss of condensate.

10) Line No. 2HDL-012-501-4, 2HDL-012-502-4

Function

Fifth point heater 2CNM-E5A drain line to the fourth point heater 2CNM-E4A.

Failure Effect

Partial loss of feedwater heating in the fifth point heater 2CNM-E5A and fourth point heater 2CNM-E4A.

11) Line No. 2HDL-008-202-4

Function

Drain line from drain receiver 2HDL-TK2A to the drain cooler 2CNM-DCL2A.

Failure Effect

Partial loss of feedwater heating in the second point heater 2CNM-E2A and the drain cooler 2CNM-DCL2A.

12) Line No. 2HDL-008-205-4

Function

Drain line from drain cooler 2CNM-DCL2A to the main condenser.

Failure Effect

Loss of condenser vacuum.

13) Line No. 2HDL-006-210-4

Function

Relief vent line from drain cooler 2CNM-DCL3A to the main condenser.

Failure Effect

Loss of condenser vacuum.

14) Line No. 2HDL-008-304-4

Function

Drain cooler 2CNM-DCL3A discharge line to the main condenser.

Failure Effect

Loss of condenser vacuum.

15) Line Nos. 2HDL-012-404-4, 2HDL-012-405-4

Function

Fourth point heater drain pump 2HDL-P1A discharge pipe to condensate system.

Failure Effect

Partial loss of feedwater.

16) Line No. 2HDL-006-407-4

Function

Fourth point heater drain pump 2HDL-P1A recirculation line.

Failure Effect

Partial loss of feedwater.

17) Line No. 2HDL-002-413-4

Function

Fourth point heater 2CNM-E4A feedwater heater relief vent to the main condenser.

Failure Effect

Loss of condenser vacuum.

18) Line Nos. 2HDL-004-507-4, 2HDL-002-505-4, 2HDL-002-506-4

Function

Fifth point heater 2CNM-E5A standpipe and standpipe connection for level measurement.

Failure Effect

Partial loss of feedwater heating in the fifth point heater 2CNM-E5A due to loss of extraction steam and condensate.

19) Line No. 2HDL-016-503-4

Function

Fifth point heater 2CNM-E5A drain line to the main condenser.

Failure Effect

Loss of condenser vacuum.

i. Feedwater Heater Relief, Vents, and Drains (SVH, 32-14)

1) Line No. 2SVH-002-401-4, 2SVH-002-402-4, 2SVH-008-404-4, 2SVH-002-405-4, 2SVH-150-406-4, 2SVH-002-407-4

Function

Fourth point feedwater heater 2CNM-E4A relief, vent and drain lines to the main condenser.

Failure Effect

Loss of condenser vacuum.

2) Line Nos. 2SVH-002-301-4, 2SVH-002-302-4, 2SVH-002-305-4, 2SVH-250-306-4, 2SVH-003-307-4

Function

Third point feedwater heater 2CNM-E3A vent and drain lines to the main condenser.

Failure Effect

Loss of condenser vacuum.

3) Line Nos. 2SVH-002-804-4, 2SVH-008-805-4

Function

Drain cooler 2CNM-DCL3A relief and vent lines to the main condenser.

Failure Effect

Loss of condenser vacuum.

4) Line No. 2SVH-002-704-4

Function

Drain cooler 2CNM-DCL2A vent line to the main condenser.

Failure Effect

Loss of condenser vacuum.

5) Line Nos. 2SVH-008-604-4, 2SVH-150-606-4, 2SVH-002-605-4, 2SVH-002-602-4

Function

Sixth point feedwater heater 2FWS-E6A relief vent and drain lines to the main condenser.

Failure Effect

Loss of condenser vacuum.

6) Line Nos. 2SVH-008-504-4, 2SVH-150-506-4, 2SVH-002-505-4, 2SVH-002-501-4, 2SVH-002-502-4

Function

Fifth point feedwater heater 2CNM-E5A relief vent and drain lines to the main condenser.

Failure Effect

Loss of condenser vacuum.

2. The following is the list of nonsafety-related control components that are affected by a high energy line break on any of the lines listed in Item 1. The consequence of failure of each control component is analyzed. Refer to Appendix B for the function of individual components.

Additionally, a high energy line break in this zone will also result in failure of control components in Zone D. The significant consequences of such a failure have been integrated into the analysis by referring to the appropriate "Failure Effect" from the above-listed zone(s) in the "Combined Effect" section of this zone.

a. Condensate (CNM, 4-1)

2CNM-HV51A, 2CNM-SOV51A, 2CNM-HV52A, 2CNM-SOV52A, 2CNM-HV56A, 2CNM-SOV56A, 2CNM-HV57A, 2CNM-SOV57A, 2CNM-HV58A, 2CNM-SOV58A, 2CNM-HV59A, 2CNM-SOV59A, 2CNM-HV60A, 2CNM-SOV60A

Failure Effect

Failure of the above valves has no significant effect.

b. Moisture Separator Vents and Drains (DSM, 32-7)

2DSM-LVX75A, 2DSM-SOVX75A, 2DSM-LVX75B, 2DSM-SOVX75B

Failure Effect

Failure of the above valves to closed position will cause high water level in the moisture separator drain receiver 2DSM-TK4A, B resulting in dumping the drains to the condenser through the valve 2DSM-LV78A, B, thus causing partial loss of feedwater heating in the fourth point heater 2CNM-E4A.

c. Moisture Separator Reheater Vents and Drains (DSR, 32-6)

1) 2DSR-AOV81A, 2DSR-SOV81A

Failure Effect

The above valve is intended to operate only when the turbine is tripped; therefore, failure of the valve at that time will have no effect on reactor parameters.

If the valve fails to close, position during the normal reactor operation, partial loss of feedwater heating will result in the sixth point heater 2FWS-E6A.

2) 2DSR-LVX65A, 2DSR-SOVX65A, 2DSR-LVX65B, 2DSR-SOVX65B

Failure Effect

Failure of the above valves to closed position will cause high water level in the reheater drain receiver 2DSR-TK6A, B, resulting in dumping the drains to the condenser through the valve 2DSR-LV68A, B, thus causing partial loss of feedwater heating in the sixth point heater 2FWS-E6A.

d. Feedwater (FWS, 6-1)

2FWS-HV42A, 2FWS-SOV42A, 2FWS-HV43A, 2FWS-SOV43A

Failure Effect

Failure of any or all of the above valves has no significant effect.

e. High Pressure Feedwater Heater Drain (HDH, 6-6)

2HDH-LV6A, 2HDH-SOV6A, 2HDH-LT6A, 2HDH-LT26A, 2HDH-LS7A, 2HDH-LS26A

Failure Effect

If 2HDH-LV6A fails closed as a failure of instrumentation, partial heating of condensate at fifth point heater 2CNM-E5A will be lost.

If 2HDH-LT26A or LS26A fails, thereby signaling high level in sixth point heater 2FWS-E6A, thereby opening 2HDH-LV26A to drain the heater to condenser, this will bypass the heater drain to the fifth point heater 2CNM-E5A resulting in loss of partial heating of condensate at fifth point heater. 2HDH-LS26A failure will also close 2HDH-LV26A resulting in loss of feedwater heating at sixth point heater 2FWS-E6A.

If 2HDH-LS7A fails, thereby signaling extreme high level in sixth point heater 2FWS-E6A, sixth point extraction steam isolation valve 2ESS-MOV3A and nonreturn valve 2ESS-NRV34A will close. This will result in loss of feedwater heating at sixth point heater 2FWS-E6A.

f. Low Pressure Feedwater Heater Drain (HDL, 4-2)

1) 2HDL-LV4A

Failure Effect

If the valve 2HDL-LV4A fails in open position, fourth point heater low level switch 2HDL-LS14A will eventually trip the heater drain pump 2HDL-P1A. If the valve fails in closed position the same result will occur without the heater drain pump trip.

2) 2HDL-LV5A, 2HDL-SOV5A

Failure Effect

Failure of the above valve in the closed position will cause bypassing the fourth point heater 2CNM-E4A resulting in partial loss of feedwater heating.

3) 2HDL-LT3A, 2HDL-LS9A, 2HDL-LT23A, 2HDL-LS23A

Failure Effect

If 2HDL-LT3A, 2HDL-LT23A, and 2HDL-LS23A signal in such a way that the third point heater drain valves 2HDL-LV3A and 2HDL-LV23A fail in closed position, it may cause flooding of the drain cooler and the third point heater, resulting in partial loss of feedwater heating.

If level switch 2HDL-LS9A causes inadvertent closure of extraction steam isolation valve 2ESS-MOV15A, loss of feedwater heating in the third point heater will result.

4) 2HDL-FV35A, 2HDL-SOVX35A, 2HDL-SOVY35A

Failure Effect

If the above valve fails in open position, heater drain pump discharge flow to the condensate system will be reduced, thus causing partial loss of feedwater.

If the valve fails in closed position, it may result in heater drain pump overheating in low flow condition.

5) 2HDL-LT4A (tubing), 2HDL-LS10A, 2HDL-LT24A, 2HDL-LS24A, 2HDL-LS14A

Failure Effect

If 2HDL-LT4A causes 2HDL-LV4A to fail in closed position, partial loss of feedwater will result. Failure of

2HDL-LV24A to open position due to the failure of 2HDL-LT24A and 2HDL-LS24A will also result in a partial loss of feedwater. Failure of 2HDL-LS14A may cause heater drain pump 2HDL-P1A to trip, resulting in partial loss of feedwater.

Failure of 2HDL-LS10A may cause closing of extraction steam valve 2ESS-MOV22A, resulting in loss of feedwater heating in fourth point heater 2CNM-E4A.

6) 2HDL-LT5A, 2HDL-LS11A, 2HDL-LT25A, 2HDL-LS25A

Failure Effect

If 2HDL-LT5A signals in such a way that fifth point heater drain valve 2HDL-LV5A fails closed bypassing the fourth point heater 2HDL-E4A resulting in partial loss of feedwater heating.

If 2HDL-LT25A or 2HDL-LS25A fails the fifth point heater drain bypass valve 2HDL-LV25A in open position, the fourth point heater 2HDL-E4A is bypassed, resulting in partial loss of feedwater heating.

If 2HDL-LS11A fails, thereby signaling extreme high level in fifth point heater 2HDL-E5A, fifth point heater extraction steam isolation valve 2ESS-MOV28A will close, resulting in loss of feedwater heating at fifth point heater 2CNM-E5A.

g. FDW Heater Relief Vents and Drains (SVH, 32-14)

1) 2SVH-HV27A, 2SVH-SOV27A, 2SVH-HV36A, 2SVH-SOV36A, 2SVH-HV52A, 2SVH-SOV52A, 2SVH-HV58A, 2SVH-SOV58A, 2SVH-HV26A, 2SVH-SOV26A, 2SVH-HV37A, 2SVH-SOV37A

Failure Effect

Failure of any or all of the above valves has no significant effect.

2) 2SVH-HV31A, 2SVH-HV44A, 2SVH-SOV31A, 2SVH-SOV44A

Failure Effect

If these shell vent valves fail open and cause venting of third and fourth point heaters (A) to the condenser, no significant impact results.

3) 2SVH-HV32A, 2SVH-HV45A, 2SVH-SOV32A, 2SVH-SOV45A

Failure Effect

If these heater channel vent valves fail open and cause venting of third and fourth point heaters (A) to the equipment drains, no significant impact results.

3. Combined Effects

a. A break in auxiliary condensate high energy line in this zone will result in a loss of feedwater heating in the third point heaters. Loss of feedwater heating event is bounded by FSAR Section 15.1.1 analyses.

The failure of control components [2.b, 2.c.2), 2.e, 2.f.1), 2.f.2), 2.f.3), or 2.f.6)] in this zone may also result in further reduction in feedwater heating, an event bounded by FSAR Section 15.1.1 analyses. In addition to this, failure of the control components [2.f.4) or 2.f.5)] may result in loss of feedwater. Loss of feedwater event is bounded by FSAR Section 15.2.7 analyses.

As a result of high energy line break in this zone, control components in this zone or Zone D may fail, resulting in any or all of the following events:

1) Loss of feedwater heating in the 3rd, 4th, 5th, and 6th point heaters in the A string only (Zone F) and partial loss of 5th and 6th point heaters and second and third point drain coolers in Zone D, an event bounded by FSAR Section 15.1.1 analyses.

2) Loss of feedwater (Zone F, Item 2.f.1, and Zone D), an event bounded by FSAR Section 15.2.7 analyses.

3) Turbine trip (Zone D), an event bounded by FSAR Section 15.2.3 analyses.

4) Loss of condenser vacuum (Zone D), an event bounded by FSAR Section 15.2.5 analyses.

5) Feedwater controller failure - maximum demand (Zone D), an event bounded by FSAR Section 15.1.2 analyses.

If the turbine trip occurs at a reactor power level elevated from initial operating value due to the loss of feedwater heating (caused by the failure of control components in this zone or zone D), the reactor may experience a change in critical power ratio greater than that described in the unacceptable results of incidents of moderate frequency anticipated operational transients of FSAR Chapter 15. See Section 3.0 for further discussion.

b. 1) A break in any of the condensate high energy lines [Item 1.b.1)] will result in a loss of feedwater heating, an event bounded by FSAR Section 15.1.1 analyses. For failure of control components in this zone or zone D, refer to Item 3.a.

2) A break in any of the condensate high energy lines [Item 1.b.1) through 1.b.5)] will result in a loss of feedwater, an event bounded by FSAR Section 15.6.6 analyses. For failure of control components in this zone or zone D, refer to Item 3.a.

c. A break in any of the moisture separator vents and drains high energy lines in this zone will result in a loss of feedwater heating in the fourth point heater. Loss of feedwater heating is bounded by FSAR Section 15.1.1 analyses. For failure of control components in this zone or zone D, refer to Item 3.a.

d. A break in any of the moisture separator reheater vents and drains high energy lines in this zone will result in a loss of feedwater heating in the sixth point heater. Loss of feedwater heating event is bounded by FSAR Section 15.1.1 analyses.. For failure of control components in this zone or zone D, refer to Item 3.a.

e. A break in any of the extraction steam high energy lines in this zone will result in a loss of extraction steam to the third, fourth, fifth, or sixth point heater. Loss of extraction steam will cause a loss of feedwater heating in third, fourth, fifth, or sixth point heater. Loss of feedwater heating event is bounded by FSAR Section 15.1.1 analyses. For failure of control components in this zone or zone D, refer to Item 3.a.

f. A break in any of the feedwater high energy lines in this zone will result in a loss of feedwater, an event bounded by FSAR Section 15.6.6 analyses. For failure of control components in this zone or zone D, refer to Item 3.a.

g. 1) A break in any of the high pressure feedwater heater drain high energy lines [Item 1.g.1) or 1.g.2)] will result in a loss of feedwater heating in fifth and sixth point heaters. Loss of feedwater heating event is bounded by FSAR Section 15.1.1 analyses. For failure of control components in this zone or zone D, refer to Item 3.a.

2) A break in the high pressure feedwater heater drain high energy line [Item 1.g.3)] will result in a loss of main condenser vacuum, an event bounded by FSAR Section 15.2.5 analyses. The failure of any control component in this zone or zone D does not exacerbate this event.

h. 1) A break in any of the low pressure feedwater heater drain high energy lines [Item 1.h.1), 1.h.3), 1.h.4), 1.h.6), 1.h.7) through 1.h.11), or 1.h.18),] will result in a loss of feedwater heating in second, third, fourth, or fifth point heater. Loss of feedwater heating event is bounded by FSAR Section 15.1.1 analyses. For failure of control components in this zone or zone D, refer to Item 3.a.

2) A break in any of the low pressure feedwater heater drain high energy lines [Item 1.h.2), 1.h.5), 1.h.12), 1.h.13), 1.h.14), 1.h.17), or 1.h.19)] will result in a loss of main condenser vacuum, an event bounded by FSAR Section 15.2.5 analyses. For failure of any control component in this zone or zone D refer to Item 3.a.

3) A break in any of the low pressure feedwater heater drain high energy lines [Item 1.h.15) or 1.h.16)] will result in a loss of feedwater, an event bounded by FSAR Section 15.6.6 analyses. Failure of control components in this zone or Zone D is described in Item 3.a.

i. A break in any of the feedwater heater relief, vents, and drains high energy lines in this zone will result in a loss of main condenser vacuum. Loss of condenser vacuum event is bounded by FSAR Section 15.2.5 analyses. For failure of any control component in this zone or zone D refer to Item 3.a.

APPENDIX D

HIGH ENERGY LINE BREAK ANALYSIS

ZONE G

Building: Turbine Building
Location: El 277 ft 6 in., 250 ft 0 in. and Tunnels

HELB System		Control System	
CNA (4-4)	Auxiliary Condensate	CNM (4-1)	Condensate
CNM (4-1)	Condensate	DSM (32-7)	Moisture Separator Vents and Drains
DSM (32-7)	Moisture Separator Vents and Drains	DSR (32-6)	Moisture Separator Reheater Vents and Drains
DSR (32-6)	Moisture Separator Reheater Vents and Drains	FWS (6-1)	Feedwater
ESS (3-4)	Extraction Steam	HDH (6-6)	High Pressure Feedwater Heater Drain
FWS (6-1)	Feedwater	HDL (4-2)	Low Pressure Feedwater Heater Drain
HDH (6-6)	High Pressure Feedwater Heater Drain	SVH (32-14)	FDW Heater Relief Vents and Drains
HDL (4-2)	Low Pressure Feedwater Heater Drains		
SVH (32-14)	FDW Heater Relief Vents and Drains		
TME (16-1)	Turbine Generator Gland Seal and Exhaust		

1. The following is a list of high energy lines analyzed on a system basis:

   a. Auxiliary Condensate (CNA, 4-4)

      Line No. 2CNA-003-318-4

      Function

      Reboiler drain tanks 2CNA-TK1A, 2CNA-TK1B discharge line to third point heater 2CNM-E3A.

Failure Effect

Partial loss of feedwater heating in the third point heaters 2CNM-E3A, 2CNM-E3B, 2CNM-E3C.

b. Condensate (CNM, 4-1)

1) Line No. 2CNM-004-313-4

Function

Line for moisture separator drain tank quench spray.

Failure Effect

Partial loss of feedwater

2) Line Nos. 2CNM-018-77-4, 2CNM-018-45-4, 2CNM-018-48-4, 2CNM-018-54-4, 2CNM-018-57-4, 2CNM-012-325-4, 2CNM-018-328-4, 2CNM-018-60-4, 2CNM-020-80-4, 2CNM-020-63-4

Function

Feedwater piping for the low pressure heater string "B".

Failure Effect

Partial or total loss of feedwater.

3) Line Nos. 2CNM-020-62-4, 2CNM-030-219-4

Function

LP heater string discharge header

Failure Effect

Total loss of feedwater

4) Line Nos. 2CNM-018-238-4, 2CNM-018-91-4, 2CNM-006-239-4, 2CNM-006-136-4

Function

Reactor feed pumps bypass line.

Failure Effect

Partial loss of feedwater.

5) Line No. 2CNM-030-225-4

Function

Reactor feed pumps inlet header.

Failure Effect

Total loss of feedwater.

6) Line Nos. 2CNM-024-84-4, 2CNM-024-85-4

Function

Reactor feed pump 2FWS-P1A, B suction piping.

Failure Effect

Partial loss of feedwater.

7) Line No. 2CNM-002-227-4

Function

Reactor feed pump 2FWS-P1B isolation valve 2CNM-MOV84B bypass line.

Failure Effect

Partial loss of feedwater.

8) Line No. 2CNM-024-43-4

Function

LP heater string inlet header.

Failure Effect

Total loss of feedwater.

9) Line No. 2CNM-012-66-4

Function

Fourth point heater drain pump 2HDL-P1B discharge line to the condensate system.

Failure Effect

Partial loss of feedwater flow.

10) Line No. 2CNM-018-78-4

Function

Drain cooler 2CNM-DCL2C feedwater inlet piping.

Failure Effect

Partial or total loss of feedwater.

c. Moisture Separator Vents and Drains (DSM, 32-7)

1) Line No. 2DSM-012-43-4, 2DSM-010-3-4, 2DSM-010-44-4

Function

Moisture separator drain receiver 2DSM-TK4A drain lines to the 4th point heaters 2CNM-E4A and B.

Failure Effect

Partial loss of feedwater heating in the 4th point heaters 2CNM-E4A, B, C.

2) Line No. 2DSM-010-21-4 and 2DSM-010-46-4

Function

Moisture separator drain receiver 2DSM-TK4B drain lines to the 4th point heaters 2CNM-E4A and B.

Failure Effect

Partial loss of feedwater heating in the 4th point heaters 2CNM-E4A, B, C.

d. Moisture Separator Reheater Vents and Drains (DSR, 32-6)

1) Line Nos. 2DSR-012-27-4, 2DSR-012-29-4, 2DSR-010-3-4, 2DSR-010-16-4, 2DSR-010-28-4, 2DSR-010-30-4

Function

Reheater drain receiver 2DSR-TK6A and B drain lines to the 6th point heaters 2FWS-E6A, B, and C.

Failure Effect

Partial loss of feedwater heating to the 6th point heaters 2FWS-E6A, B, and C.

2) Line No. 2DSR-012-113-4

Function

6th point heater 2FWS-E6B inlet piping from reheater drain receivers 2DSR-TK6A, B vent line header.

Failure Effect

Partial loss of feedwater heating in the 6th point heater 2FWS-E6B.

3) Line No. 2DSR-012-110-4

Function

6th point heater 2FWS-E6B inlet piping from reheater drain receiver 2DSR-TR6A, B vent line header.

Failure Effect

Partial loss of feedwater heating in the 6th point heaters 2FWS-E6A, B, and C.

4) Line No. 2DSR-008-103-4

Function

Reheater drain receiver 2DSR-TK6B vent line to the 6th point heaters inlet header.

Failure Effect

Partial loss of feedwater heating in the 6th point heater 2FWS-E6A, B, and C.

5) Line No. 2DSR-012-118-4

Function

Reheater drain receivers 2DSR-TK6A, B vent lines header to the 6th point heaters 2FWS-E6A, B, and C.

Failure Effect

Partial loss of feedwater heating in the 6th point heaters 2FWS-E6A, B, and C.

e. Extraction Steam (ESS, 3-4)

1) Line No. 2ESS-012-7-4

Function

Extraction steam line to the 6th point heater 2FWS-E6B.

Failure Effect

Loss of feedwater heating in the 6th point heaters 2FWS-E6A, B, and C.

2) Line No. 2ESS-016-19-4

Function

Extraction steam line to the 5th point heater 2CNM-E5B.

Failure Effect

Loss of feedwater heating in the 5th point heaters 2CNM-E5A, B, and C.

3) Line No. 2ESS-014-27-4

Function

Extraction steam line to the 4th point heater 2CNM-E4B.

Failure Effect

Loss of feedwater heating in the 4th point heater 2CNM-E4B.

4) Line No. 2ESS-026-39-4

Function

Extraction steam line to the 3rd point heater 2CNM-E3B.

Failure Effect

Loss of feedwater heating in the 3rd point heater 2CNM-E3B.

f. Feedwater (FWS, 6-1)

1) Line No. 2FWS-024-19-4, 2FWS-024-20-4.

Function

Reactor feed pumps 2FWS-P1A, B, and C discharge header.

Failure Effect

Total loss of feedwater flow

2) Line No. 2FWS-018-18-4

Function

LP heater string bypass line.

Failure Effect

Loss of feedwater flow.

3) Line No. 2FWS-004-128-4

Function

Line for reheater drain tank quench spray.

Failure Effect

Partial loss of feedwater.

4) Line No. 2FWS-024-10-4, 2FWS-020-39-4, 2FWS-020-11-4

Function

Reactor feed pump 2FWS-P1B discharge piping.

Failure Effect

Total loss of feedwater flow.

5) Line No. 2FWS-006-92-4

Function

Startup line for reactor feed pump 2FWS-P1B.

Failure Effect

Partial loss of feedwater flow.

6) Line No. 2FWS-016-100-4

Function

6th point heaters 2FWS-E6A, B, and C bypass line.

Failure Effect

Loss of feedwater flow.

7) Line No. 2FWS-024-29-4

Function

6th point heaters 2FWS-E6A, B, and C discharge header.

Failure Effect

Total loss of feedwater flow.

g. High Pressure Feedwater Heater Drain (HDH, 6-6)

1) Line Nos. 2HDH-004-617-4, 2HDH-002-616-4, 2HDH-002-615-4

Function

6th point heater 2FWS-E6B standpipe and standpipe connections for level measurement.

Failure Effect

Partial loss of feedwater heating in the 6th point heater 2FWS-E6B due to the loss of extraction steam and condensate.

2) Line No. 2HDH-012-611-4

Function

6th point heater 2FWS-E6B drain line to the 5th point heater 2CNM-E5B.

Failure Effect

Partial loss of feedwater heating in the 6th point heater 2FWS-E6B and the 5th point heater 2CNM-E5B.

3) Line No. 2HDH-014-613-4

Function

6th point heater 2FWS-E6B drain line to the main condenser.

Failure Effect

Loss of condenser vacuum.

h. Low Pressure Feedwater Heater Drains (HDL, 4-2)

1) Line Nos. 2HDL-004-318-4, 2HDL-002-316-4, 2HDL-002-317-4

Function

Third point heater 2CNM-E3B standpipe and standpipe connection for level measurement.

Failure Effect

Partial loss of feedwater heating in the third point heater 2CNM-E3B due to the loss of extraction steam and condensate.

2) Line No. 2HDL-008-311-4

Function

Third point heater 2CNM-E3B drain line to the drain cooler 2CNM-DCL3B.

Failure Effect

Partial loss of feedwater heating in the third point heater 2CNM-E3B.

3) Line No. 2HDL-008-312-4

Function

Third point heater 2CNM-E3B drain line to the main condenser.

Failure Effect

Loss of condenser vacuum.

4) Line Nos. 2HDL-004-430-4, 2HDL-002-428-4, 2HDL-002-429-4

Function

Fourth point heater 2CNM-E4B standpipe and standpipe connections for level measurement.

Failure Effect

Partial loss of feedwater heating in the fourth point heater 2CNM-E4B.

5) Line Nos. 2HDL-012-511-4, 2HDL-012-512-4, 2HDL-008-431-4, 2HDL-008-434-4

Function

Fifth point heater 2CNM-E5B drain lines to the fourth point heater 2CNM-E4B.

Failure Effect

Partial loss of feedwater heating in the fifth and fourth point heaters 2CNM-E5B and 2CNM-E4B.

6) Line No. 2HDL-002-426-4

Function

Fourth point heater drain pump 2HDL-P1B vent line to the fourth point heater 2CNM-E4B.

Failure Effect

Partial loss of feedwater heating in the fourth point heater 2CNM-E4B due to loss of condensate.

7) Line No. 2HDL-014-421-4

Function

Fourth point heater 2CNM-E4B drain line to the fourth point heater drain pump 2HDL-P1B suction.

Failure Effect

Partial loss of feedwater heating in the fourth point heater 2CNM-E4B.

8) Line No. 2HDL-018-422-4

Function

Fourth point heater 2CNM-E4B drain line to the main condenser.

Failure Effect

Loss of condenser vacuum.

9) Line Nos. 2HDL-006-432-4, 2HDL-006-427-4

Function

Fourth point point heater drain pump 2HDL-P1B recirculation line.

Failure Effect

Partial loss of feedwater heating in the fourth point heater 2CNM-E4B and partial loss of condensate inventory.

10) Line No. 2HDL-002-433-4

Function

Fourth point heater 2CNM-E4B relief vent to the main condenser.

Failure Effect

Loss of condenser vacuum.

11) Line Nos. 2HDL-004-517-4, 2HDL-002-515-4, 2HDL-002-516-4

Function

Fifth point heater 2CNM-E5B standpipe and standpipe connections for level measurement.

Failure Effect

Partial loss of feedwater heating in the fifth point heater 2CNM-E5B due to loss of extraction steam and condensate.

12) Line No. 2HDL-016-513-4

Function

Fifth point heater 2CNM-E5B drain lines to the main condenser.

Failure Effect

Loss of condenser vacuum.

13) Line Nos. 2HDL-012-424-4, 2HDL-012-425-4

Function

Fourth point heater drain pump 2HDL-P1B discharge lines.

Failure Effect

Partial loss of feedwater flow.

14) Line No. 2HDL-008-212-4

Function

Drain line from the drain receiver 2HDL-TK2B to the drain cooler 2CNM-DCL2B.

Failure Effect

Partial loss of feedwater heating in the second point heater 2CNM-E2B and the drain cooler 2CNM-DCL2B.

15) Line No. 2HDL-008-215-4

Function

Drain cooler 2CNM-DCL2B drain line to the main condenser.

Failure Effect

Loss of condenser vacuum.

16) Line No. 2HDL-006-220-4

Function

Third point heater 2CNM-E3B relief vent line to the main condenser.

Failure Effect

Loss of condenser vacuum.

17) Line No. 2HDL-008-314-4

Function

Drain cooler 2CNM-DCL3B drain line to the main condenser.

Failure Effect

Loss of condenser vacuum.

i. FDW Heater Relief Vents and Drains (SVH, 32-14)

1) Line Nos. 2SVH-008-634-4, 2SVH-002-635-4, 2SVH-150-636-4, 2SVH-002-632-4

Function

6th point feedwater heater 2FWS-E6B relief, vent, and drain lines to the main condenser.

Failure Effect

Loss of condenser vacuum.

2) Line Nos. 2SVH-008-534-4, 2SVH-002-535-4, 2SVH-150-536-4, 2SVH-002-532-4, 2SVH-002-531-4

Function

5th point feedwater heater 2CNM-E5B relief, vent, and drain lines to the main condenser.

Failure Effect

Loss of condenser vacuum.

3) Line Nos. 2SVH-008-434-4, 2SVH-002-435-4, 2SVH-150-436-4, 2SVH-002-432-4, 2SVH-002-431-4, 2SVH-002-437-4

Function

4th point feedwater heater 2CNM-E4B relief, vents and drain lines to the main condenser.

Failure Effect

Loss of condenser vacuum.

4) Line Nos. 2SVH-250-336-4, 2SVH-002-335-4, 2SVH-002-331-4, 2SVH-003-337-4, 2SVH-002-332-4

Function

3rd point feedwater heater 2CNM-E3B vent and drain lines to the main condenser.

Failure Effect

Loss of condenser vacuum.

5) Line No. 2SVH-008-835-4, 2SVH-002-834-4.

Function

Drain cooler 2CNM-DCL3B relief and vent lines to the main condenser.

Failure Effect

Loss of condenser vacuum.

6) Line No. 2SVH-002-734-4

Function

Drain cooler 2CNM-DCL2B vent line to the main condenser.

Failure Effect

Loss of condenser vacuum.

j. Turbine Generator Gland Seal and Exhaust (TME, 16-1)

Line No. 2TME-012-076-4

Function

Safety valve 2TME-SV125 discharge to main condenser.

Failure Effect

Loss of condenser vacuum.

2. The following is the list of nonsafety-related control components that are affected by a high energy line break on any of the lines listed in Item 1. The consequence of failure of each control component is analyzed.

Additionally, a high energy line break in this zone will also result in failure of control components in Zone D. The significant consequences of such a failure have been integrated into the analysis by referring to the appropriate Failure Effect from the above listed zones in the Combined Effect section of this zone.

a. Condensate (CNM, 4-1)

1) 2CNM-AOV101, 2CNM-SOV101A, 2CNM-SOV101B, 2CNM-SOV101C, 2CNM-SOV101D

Failure Effect

Inadvertent opening of 2CNM-AOV101 will cause the feedwater to bypass the LP heater string resulting in loss of feedwater heating.

If the valve 2CNM-AOV101 fails to open in the event of feedwater tube failure in the first and second point heaters, possible water induction into the turbine may ultimately cause turbine trip due to excessive vibration.

2) 2CNM-HV56A, 2CNM-SOV56B, 2CNM-HV57B, 2CNM-SOV57B, 2CNM-HV58B, 2CNM-SOV58B, 2CNM-HV59B, 2CNM-SOV59B, 2CNM-HV60B, 2CNM-SOV60B, 2CNM-HV51B, 2CNM-SOV51B, 2CNM-HV52B, 2CNM-SOV52B

Failure Effect

Failure of the above valves has no significant effect.

3) 2CNM-LV137

Failure Effect

Failure of the above valve either in the close or open position will pose no significant effect on feedwater pumps.

b. Moisture Separator Vents and Drains (DSM, 32-7)

2DSM-LVY75A, 2DSM-SOVY75A, 2DSM-LVY75B, 2DSM-SOVY75B

Failure Effect

Failure of the above valves to closed position will cause high water level in the moisture separator drain receiver 2DSM-TK4A, B resulting in dumping the drains to the condenser through the valve 2DSM-LV78A, B thus causing partial loss of feedwater heating in the fourth point heater 2CNM-E4B.

c. Moisture Separator Reheater Vents and Drains (DSR, 32-6)

1) 2DSR-SOVY65A, 2DSR-LVY65A, 2DSR-SOVY65B, 2DSR-LVY65B

Failure Effect

If the solenoid valve, 2DSR-SOVZ65A (or 65B) fails the control valve 2DSR-LVZ65A (or 65B) in close position, partial loss of feedwater heating at the sixth point heater 2FWS-E6B will result.

2) 2DSR-AOV81B, 2DSR-SOV81B

Failure Effect

If the valve fails to closed position during the normal reactor operation, partial loss of feedwater heating will result in the sixth point heater 2FWS-E6B.

d. Feedwater (FWS, 6-1)

2FWS-HV42B, 2FWS-SOV42B, 2FWS-HV43B, 2FWS-SOV43B

Failure Effect

Failure of any or all of the above valves has no significant effect.

e. High Pressure Feedwater Heater Drain (HDH, 6-6)

1) 2HDH-LV6B, 2HDH-LT6B, 2HDH-SOV6B, 2HDH-LT26B, 2HDH-LS26B, 2HDH-LS7B

If 2HDH-LV6B fails closed as a failure of instrumentation, partial heating of condensate at fifth point heater 2CNM-E5B will be lost.

If 2HDH-LT26B or LS26B fails, thereby signaling high level in sixth point heater 2FWS-E6B, thereby opening 2HDH-LV26B to drain the heater to condenser. This will bypass the heater drain to the fifth point heater 2CNM-E5B, resulting in loss of partial heating of condensate at fifth point heater. 2HDH-LS26B failure will also close 2HDH-LV26B resulting in partial loss of feedwater heating at sixth point heater 2FWS-E6B.

If 2HDH-LS7B fails, thereby signaling extreme high level in sixth point heater 2FWS-E6B, sixth point extraction steam isolation valve 2ESS-MOV3B and nonreturn valve 2ESS-NRV34B will close. This will result in loss of feedwater heating at sixth point heater 2FWS-E6B.

2) 2HDH-SOV29B

Failure Effect

Failure of the valve 2HDH-SOV29B in the close or open position has no significant effect.

f. Low Pressure Feedwater Heater Drain (HDL, 4-2)

1) 2HDL-FV35B, 2HDL-SOVX35B, 2HDL-SOVY35B

Failure Effect

If the above valve fails in open position, heater drain pump discharge flow to the condensate system will be reduced, thus causing partial loss of feedwater.

If the valve fails in closed position, it may result in heater drain pump overheating in low flow condition.

2) 2HDL-LT4B (tubing), 2HDL-LS10B, 2HDL-LT24B, 2HDL-LS24B, 2HDL-LS14B

Failure Effect

If 2HDL-LT4B causes 2HDL-LV4B to fail in closed position, partial loss of feedwater will result. Failure of 2HDL-LV24B to open position due to the failure of 2HDL-LT24B and 2HDL-LS24B will also result in a partial loss of feedwater. Failure of 2HDL-LS14B may cause heater drain pump 2HDL-P1B to trip resulting in partial loss of feedwater.

Failure of 2HDL-LS10B may cause closing of extraction steam valve 2ESS-MOV22B resulting in loss of feedwater heating in fourth point heater 2CNM-E4B.

3) 2HDL-LV4B

Failure Effect

If the valve 2HDL-LV4B fails in open position, fourth point heater low level switch 2HDL-LS14B will eventually trip the heater drain pump 2HDL-P1B. If the valve fails in closed position the same result will occur without the heater drain pump trip.

4) 2HDL-LT3B, 2HDL-LS9B, 2HDL-LT23B, 2HDL-LS23B.

Failure Effect

If 2HDL-LT3B, 2HDL-LT23B, and 2HDL-LS23B signals in such a way that the third point heater drain valves 2HDL-LV3B and 2HDL-LV23B fail in closed position, it may cause flooding in the drain cooler and the third point heater resulting in partial loss of feedwater heating.

If the level switch 2HDL-LS9B causes inadvertent closure of the extraction steam isolation valve 2ESS-MOV15B, loss of feedwater heating in the third point heater will result.

5) 2HDL-LT5B, 2HDL-LS11B, 2HDL-LV5B, 2HDL-SOV5B, 2HDL-LT25B, 2HDL-LS25B

Failure Effect

If 2HDL-LT5B signals in such a way that fifth point heater drain valve 2HDL-LV5B fails closed bypassing the fourth point heater 2HDL-E4B resulting in partial loss of feedwater heating.

If 2HDL-LT25B or 2HDL-LS25B fails the fifth point heater drain bypass valve 2HDL-LV25B in open position, the fourth point heater 2HDL-E4B is bypassed resulting in partial loss of feedwater heating.

If 2HDL-LS11B fails thereby signaling extreme high level in fifth point heater 2HDL-E5B, fifth point heater extraction steam isolation valve 2ESS-MOV28B will close, resulting in loss of feedwater heating at fifth point heater 2CNM-E5B.

g. FDW Heater Relief Vents and Drains (SVH, 32-14)

1) 2SVH-HV26B, 2SVH-SOV26B, 2SVH-HV37B, 2SVH-SOV37B

Failure Effect

Failure of the above heater channel drain valve in open or close position has no significant effect.

2) 2SVH-SOV27B, 2SVH-HV27B, 2SVH-SOV36B, 2SVH-HV36B, 2SVH-SOV52B, 2SVH-HV52B, 2SVH-SOV58B, 2SVH-HV58B

Failure Effect

Failure of the above shell vent valves of feedwater heaters in open or close position has no significant effect.

3) 2SVH-HV32B, 2SVH-HV45B, 2SVH-SOV32B, 2SVH-SOV45B

Failure Effect

If these heater channel vent valves fail open causing venting of third and fourth point heaters (B) to the equipment drains, no significant impact results.

4) 2SVH-HV31B, 2SVH-HV44B, 2SVH-SOV31B, 2SVH-SOV44B

Failure Effect

If these shell vent valves fail open causing venting of third and fourth point heaters (C) to the condenser, no significant impact results.

3. Combined Effect

a. A break in auxiliary condensate high energy line in this zone will result in a loss of feedwater heating in the third point heaters. Loss of feedwater heating event is bounded by FSAR Section 15.1.1 analyses.

The failure of control components [Items 2.b, 2.c.1), 2.c.2), 2.e, 2.f.2), 2.f.3), 2.f.4), or 2.f.5)] in this zone may also result in further reduction in feedwater heating in 3rd, 4th, 5th, and 6th point heaters in the B string only, an event bounded by FSAR Section 15.1.1 analyses. In addition to this, failure of the control components [Item 2.f.1) or 2.f.5)] may result in loss of feedwater. Loss of feedwater event is bounded by FSAR Section 15.2.7 analyses. Also, failure of the control component [Item 2.a.1)] may result in turbine trip, an event bounded by FSAR Section 15.2.3 analyses.

As a result of the high energy line break in this zone, control components in Zone D may fail resulting in any of the following events:

1) Turbine trip, an event bounded by FSAR Section 15.2.3 analyses.

2) Loss of condenser vacuum, an event bounded by FSAR Section 15.2.5 analyses.

3) Loss of partial feedwater heating in 5th and 6th point heaters and second and third point drain coolers, an event bounded by FSAR Section 15.1.1.

4) Loss of feedwater, an event bounded by FSAR Section 15.2.7 analyses.

5) Feedwater controller failure - maximum demand, an event bounded by FSAR Section 15.1.2 analyses.

If the turbine trip occurs at a reactor power level elevated from initial operating value due to the loss of feedwater heating (caused by the failure of control components in this zone or Zone D), the reactor may experience a change in critical power ratio greater than that described in the unacceptable results of incidents of moderate frequency (anticipated operational transients) of FSAR Chapter 15. See Section 3.0 for further discussion.

b. A break in any of the condensate high energy lines in this zone will result in a loss of feedwater. Loss of feedwater event is bounded by FSAR Section 15.6.6 analyses. In addition to this, a break in any of the high energy lines [Item 1.b.2)] will result in a loss of feedwater heating, an event bounded by FSAR Section 15.1.1 analyses. For failure of control components in this zone or Zone D, refer to Item 3.a.

c. A break in any of the moisture separator vents and drains high energy lines in this zone will result in a loss of feedwater heating in the fourth point heaters. Loss of feedwater heating is bounded by FSAR Section 15.1.1 analyses. For failure of control components in this zone or Zone D, refer to Item 3.a.

d. A break in any of the moisture separator reheater vents and drains high energy lines in this zone will result in a loss of feedwater heating in the sixth point heaters. Loss of feedwater heating event is bounded by FSAR Section 15.1.1 analyses. For failure of control components in this zone or Zone D, refer to Item 3.a.

e. A break in any of the extraction steam high energy lines in this zone will result in a loss of extraction steam to the third, fourth, fifth, or sixth point heater. Loss of extraction steam will result in a loss of feedwater heating in third, fourth, fifth, or sixth point heater. Loss of feedwater heating event is bounded by FSAR Section 15.1.1 analyses. For failure of control components in this zone or Zone D, refer to Item 3.a.

f. A break in any of the feedwater high energy lines in this zone will result in a loss of feedwater, an event bounded by FSAR Section 15.6.6 analyses. For failure of control components in this zone or Zone D, refer to Item 3.a.

g. A break in any of the high pressure feedwater heater drain high energy lines [Item 1.g.1) or 1.g.2)] will result in a loss of feedwater heating in fifth and sixth point heaters. Loss of feedwater heating is bounded by FSAR Section 15.1.1 analyses. For failure of the control components in this zone or Zone D, refer to Item 3.a.

h. 1) A break in any of the low pressure feedwater heater drains high energy lines [Item 1.h.1), 1.h.2), 1.h.4), 1.h.5), 1.h.6), 1.h.7), 1.h.9), 1.h.11), or 1.h.14)] will result in a loss of feedwater heating in second, third, fourth, or fifth point heater. Loss of feedwater heating event is bounded by FSAR Section 15.1.1 analyses. For failure of control components in this zone or Zone D, refer to Item 3.a.

2) A break in any of the low pressure feedwater heater drains high energy lines [Item 1.h.13)] will result in a loss of feedwater, an event bounded by FSAR Section 15.6.6 analyses. For failure of control components in this zone or Zone D, refer to Item 3.a.

3) A break in any of the low pressure feedwater heater drains high energy lines [Item 1.h.3), 1.h.8), 1.h.10), 1.h.12), 1.h.15), 1.h.16), or 1.h.17)] will result in a loss of main condenser vacuum. Loss of condenser vacuum event is bounded by FSAR Section 15.2.5 analyses. The failure of any control component in this zone or Zone D does not exacerbate this event.

i. A break in any of the feedwater heater relief, vents, and drains high energy lines in this zone will result in a loss of main condenser vacuum. Loss of condenser vacuum event is bounded by FSAR Section 15.2.5 analyses. The failure of any control component in this zone or Zone D does not exacerbate this event.

j. A break in the turbine generator gland seal and exhaust high energy line will result in a loss of main condenser vacuum, an event bounded by FSAR Section 15.2.5 analyses. The failure of any control component in this zone or Zone D does not exacerbate this event.

APPENDIX D

HIGH ENERGY LINE BREAK ANALYSIS

ZONE H

Location: Turbine Building
Elevation: 277 ft 6 in., 250 ft 0 in., and Tunnels

HELB System		Control System	
ASS (3-9)	Auxiliary Steam		
CNA (4-4)	Auxiliary Condensate	CNM (4-1)	Condensate
CNM (4-1)	Condensate	DSM (32-7)	Moisture Separator Vents and Drains
DSM (32-7)	Moisture Separator Vents and Drains	DSR (32-6)	Moisture Separator Reheater Vents and Drains
DSR (32-6)	Moisture Separator Reheater Vents and Drains	FWS (6-1)	Feedwater
ESS (3-4)	Extraction Steam	HDH (6-6)	High Pressure Feedwater Heater Drains
FWS (6-1)	Feedwater	HDL (4-2)	Low Pressure Feedwater Heater Drains
HDH (6-6)	High Pressure Feedwater Heater Drains	SVH (32-14)	Feedwater Heater Relief Vents and Drains
HDL (4-2)	Low Pressure Feedwater Heater Drains		
SVH (32-14)	Feedwater Heater Relief Vents and Drains		

1. The following is a list of high energy lines analyzed on a system basis:

   a. Auxiliary Steam (ASS, 3-9)

      Line No. 2ASS-003-502-4

      Function

      Relief line 2ASS-SV123 to the main condenser.

Failure Effect

Loss of condenser vacuum.

b. Auxiliary Condensate (CNA, 4-4)

Line No. 2CNA-003-415-4

Function

Third point feedwater heater 2CNM-E3C inlet piping.

Failure Effect

Loss of feedwater heating in the 3rd point feedwater heaters 2CNM-E3A, B, and C.

c. Condensate (CNM, 4-1)

1) Line No. 2CNM-002-228-4

Function

Reactor feed pump 2FWS-P1C isolation valve 2CNM-MOV4C by-pass line.

Failure Effect

Partial loss of feedwater.

2) Line No. 2CNM-012-067-4

Function

Fourth point heater drain pump 2HDL-P1C discharge line to the condensate system.

Failure Effect

Partial loss of feedwater flow.

3) Line Nos. 2CNM-018-78-4, 2CNM-018-46-4, 2CNM-018-49-4, 2CNM-018-55-4, 2CNM-018-58-4, 2CNM-012-326-4, 2CNM-018-329-4, 2CNM-018-61-4, 2CNM-020-81-4, and 2CNM-020-64-4

Function

Feedwater piping for the low pressure heater string "C".

Failure Effect

Partial or total loss of feedwater.

4) Line No. 2CNM-024-043-4

Function

Low pressure heater string inlet header.

Failure Effect

Total loss of feedwater.

5) Line No. 2CNM-024-86-4

Function

Feedwater pump 2FWS-P1C suction piping.

Failure Effect

Partial loss of feedwater.

6) Line No. 2CNM-030-219-4

Function

Low pressure heater string discharge header.

Failure Effect

Total loss of feedwater.

7) Line No. 2CNM-030-225-4

Function

Reactor feed pumps inlet header.

Failure Effect

Total loss of feedwater.

8) Line No. 2CNM-036-222-4

Function

Connecting line between low pressure heater string discharge header and reactor feed pump suction header.

Failure Effect

Total loss of feedwater.

d. Moisture Separator Vents and Drains (DSM, 32-7)

1) Line No. 2DSM-010-005-4

Function

Moisture separator drain receiver 2DSM-TK4A drain line to the 6th point heater 2CNM-E4C.

Failure Effect

Partial loss of feedwater heating in the 4th point heaters 2CNM-E4A, B, and C.

2) Line No. 2DSM-016-001-4

Function

Moisture separator drain receiver 2DSM-TK4A drain line to the 4th point heaters 2CNM-E4A, B, and C.

Failure Effect

Partial loss of feedwater heating in the 4th point heaters 2CNM-E4A, B, and C.

3) Line Nos. 2DSM-016-19-4, 2DSM-010-23-4, 2DSM-012-45-4, 2DSM-010-21-4, and 2DSM-010-46-4

Function

Moisture seperator drain receiver 2DSM-TK4B drain lines to the 4th point heaters 2CNM-E4A, B, and C.

Failure Effect

Partial loss of feedwater heating in the 4th point heaters 2CNM-E4A, B, and C.

e. Moisture Separator Reheater Vents and Drains (DSR, 32-6)

1) Line Nos. 2DSR-010-005-4, 2DSR-010-018-4, 2DSR-012-027-4, 2DSR-012-029-4, 2DSR-016-001-4, and 2DSR-016-014-4

Function

Reheater drain receivers 2DSR-TK6A and B drain lines to the 6th point heaters 2FWS-E6A, B, and C.

Failure Effect

Partial loss of feedwater heating in the 6th point heaters 2FWS-E6A, B, and C.

2) Line No. 2DSR-012-114-4

Function

Sixth point heater 2FWS-E6C inlet piping from reheater drain receivers 2DSR-TK6A and B vent line header.

Failure Effect

Partial loss of feedwater heating in the 6th point heater 2FWS-E6C.

3) Line No. 2DSR-012-118-4

Function

Reheater drain receivers 2DSR-TK6A and B vent line header.

Failure Effect

Partial loss of feedwater heating in the 6th point heaters 2FWS-E6A, B, and C.

f. Extraction Steam (ESS, 3-4)

1) Line No. 2ESS-012-009-4

Function

Extraction steam line to the 6th point heater 2FWS-E6C.

Failure Effect

Loss of feedwater heating to the 6th point heaters 2FWS-E6A, B, and C.

2) Line No. 2ESS-014-030-4

Function

Extraction steam line to the 4th point heater 2CNM-E4C.

Failure Effect

Loss of feedwater heating in the 4th point heater 2CNM-E4C.

3) Line No. 2ESS-016-021-4

Function

Extraction steam line to the 5th point heater 2CNM-E5C.

Failure Effect

Loss of feedwater heating in the 5th point heaters 2CNM-E5A, B, and C.

4) Line No. 2ESS-026-042-4

Function

Extraction steam line to the 3rd point heater 2CNM-E3C.

Failure Effect

Loss of feedwater heating in the 3rd point heater 2CNM-E3C.

g. Feedwater (FWS, 6-1)

1) Line Nos. 2FWS-020-040-4, 2FWS-020-041-4, and 2FWS-024-013-4

Function

Reactor feed pump 2FWS-P1C discharge piping.

Failure Effect

Total loss of feedwater flow.

2) Line No. 2FWS-024-019-4

Function

Reactor feed pumps 2FWS-P1A, B, and C discharge header.

Failure Effect

Total loss of feedwater flow.

3) Line No. 2FWS-024-029-4

Function

Sixth point heaters 2FWS-E6A, B, and C discharge header.

Failure Effect

Total loss of feedwater flow.

h. High Pressure Feedwater Heater Drains (HDH, 6-6)

1) Line Nos. 2HDH-002-625-4, 2HDH-002-626-4, and 2HDH-004-627-4

Function

Sixth point heater 2FWS-E6C standpipe and standpipe connections for level measurement.

Failure Effect

Partial loss of feedwater heating in the 6th point heater 2FWS-E6C due to the loss of extraction steam and condensate.

2) Line No. 2HDH-012-621-4

Function

Sixth point heater 2FWS-E6C drain line to the 5th point heater 2CNM-E5C.

Failure Effect

Partial loss of feedwater heating in the 6th point heater 2FWS-E6C and the 5th point heater 2CNM-E5C.

3) Line No. 2HDH-014-623-4

Function

Sixth point heater 2FWS-E6C drain line to the main condenser.

Failure Effect

Loss of condenser vacuum.

i. Low Pressure Feedwater Heater Drains (HDL, 4-2)

1) Line Nos. 2HDL-004-328-4, 2HDL-002-326-4, and 2HDL-002-327-4

Function

Third point heater 2CNM-E3C standpipe and standpipe connections for level measurement.

Failure Effect

Partial loss of feedwater heating in the third point heater 2CNM-E3C due to loss of extraction steam and condensate.

2) Line No. 2HDL-002-446-4

Function

Fourth point heater drain pump 2HDL-P1C vent line to the fourth point heater 2CNM-E4C.

Failure Effect

Partial loss of feedwater heating in the fourth point heater 2CNM-E4C due to loss of condensate.

3) Line Nos. 2HDL-004-450-4, 2HDL-002-448-4, and 2HDL-002-449-4

Function

Fourth point heater 2CNM-E4C standpipe and standpipe connections for level measurement.

Failure Effect

Partial loss of feedwater heating in the fourth point heater 2CNM-E4C due to loss of extraction steam and condensate.

4) Line No. 2HDL-002-453-4

Function

Fourth point heater 2CNM-E4C relief vent to the main condenser.

Failure Effect

Loss of condenser vacuum.

5) Line Nos. 2HDL-004-527-4, 2HDL-002-525-4, and 2HDL-002-526-4

Function

Fifth point heater 2CNM-E5C standpipe and standpipe connection for level measurement.

Failure Effect

Partial loss of feedwater heating in the fifth point heater 2CNM-E5C due to loss of extraction steam and condensate.

6) Line No. 2HDL-006-230-4

Function

Third point heater 2CNM-E3C relief vent line to the main condenser.

Failure Effect

Loss of condenser vacuum.

7) Line Nos. 2HDL-006-452-4 and 2HDL-006-447-4

Function

Fourth point heater drain pump 2HDL-P1C recirculation line.

Failure Effect

Partial loss of feedwater heating in the fourth point heater 2CNM-E4C and partial loss of condensate inventory.

8) Line No. 2HDL-008-222-4

Function

Drain line from drain receiver 2HDL-TK2C to drain cooler 2CNM-DCL2C.

Failure Effect

Partial loss of feedwater heating in the second point heater 2CNM-E2C and drain cooler 2CNM-DCL2C.

9) Line No. 2HDL-008-225-4

Function

Drain cooler 2CNM-DCL2C drain line to the main condenser.

Failure Effect

Loss of condenser vacuum.

10) Line No. 2HDL-008-321-4

Function

Third point heater 2CNM-E3C drain line to the drain cooler 2CNM-DCL3C.

Failure Effect

Partial loss of feedwater heating in the third point heater 2CNM-E3C and drain cooler 2CNM-DCL3C.

11) Line No. 2HDL-008-322-4

Function

Third point heater 2CNM-E3C drain line to the main condenser.

Failure Effect

Loss of condenser vacuum.

12) Line No. 2HDL-008-324-4

Function

Drain cooler 2CNM-DCL3C drain line to the main condenser.

Failure Effect

Loss of condenser vacuum.

13) Line Nos. 2HDL-012-521-4, 2HDL-012-522-4, 2HDL-008-451-4, and 2HDL-008-454-4

Function

Fifth point heater 2CNM-E5C drain lines to the fourth point heater 2CNM-E4C.

Failure Effect

Partial loss of feedwater heating in the fifth and fourth point heaters 2CNM-E5C and 2CNM-E4C.

14) Line Nos. 2HDL-012-444-4 and 2HDL-012-445-4

Function

Fourth point heater drain pump 2HDL-P1C discharge line.

Failure Effect

Partial loss of feedwater flow.

15) Line No. 2HDL-014-441-4

Function

Fourth point heater 2CNM-E4C drain line to the fourth point heater drain pump 2HDL-P1C suction.

Failure Effect

Partial loss of feedwater heating in the fourth point heater 2CNM-E4C.

16) Line No. 2HDL-016-523-4

Function

Fifth point heater 2CNM-E5C drain line to the main condenser.

Failure Effect

Loss of condenser vacuum.

17) Line No. 2HDL-018-442-4

Function

Fourth point heater 2CNM-E4C drain line to the main condenser.

Failure Effect

Loss of condenser vacuum.

j. Feedwater Heater Relief Vents and Drains (SVH, 32-14)

1) Line Nos. 2SVH-008-664-4, 2SVH-002-665-4, 2SHV-150-666-4, and 2SVH-002-662-4

Function

Sixth point feedwater heater 2FWS-E6C relief, vent, and drain lines to the main condenser.

Failure Effect

Loss of condenser vacuum.

2) Line Nos. 2SHV-008-564-4, 2SHV-150-566-4, 2SVH-002-565-4, 2SHV-002-562-4, and 2SVH-002-561-4

Function

Fifth point feedwater heater 2CNM-E5C relief, vent, and drain lines to the main condenser.

Failure Effect

Loss of condenser vacuum.

3) Line Nos. 2SVH-008-464-4, 2SVH-002-465-4, 2SVH-150-466-4, 2SVH-002-461-4, 2SVH-002-462-4, and 2SVH-002-467-4.

Function

Fourth point feedwater heater 2CNM-E4C relief, vent, and drain lines to the main condenser.

Failure Effect

Loss of condenser vacuum.

4) Line Nos. 2SVH-250-366-4, 2SVH-002-365-4, 2SVH-002-362-4, 2SVH-003-367-4, and 2SVH-002-361-4

Function

Third point feedwater heater 2CNM-E3C relief, vent, and drain lines to the main condenser.

Failure Effect

Loss of condenser vacuum.

5) Line Nos. 2SVH-008-865-4 and 2SVH-002-864-4

Function

Drain cooler 2CNM-DCL3C relief and vent drain lines to the main condenser.

Failure Effect

Loss of condenser vacuum.

6) Line No. 2SVH-002-764-4

Function

Drain cooler 2CNM-DCL2C vent line to the main condenser.

Failure Effect

Loss of condenser vacuum.

2. The following is the list of nonsafety-related control components that are affected by a HELB on any of the lines listed in Item 1. The consequence of failure of each control component is analyzed. Refer to Appendix B for the function of individual components.

Additionally, a high energy line break in this zone will also result in failure of control components in Zone D. The significant consequences of such a failure have been integrated into the analysis by referring to the appropriate "Failure Effect" from the above-listed zone(s) in the "Combined Effect" section of this zone.

a. Condensate (CNM, 4-1)

1) 2CNM-HV51C, 2CNM-SOV51C; and 2CNM-HV52C, 2CNM-SOV52C

Failure Effect

Failure of the above valves has no significant effect.

2) 2CNM-HV56C, 2CNM-SOV56C; 2CNM-HV57C, 2CNM-SOV57C; 2CNM-HV58C, 2CNM-SOV58C; 2CNM-HV59C, 2CNM-SOV59C; and 2CNM-HV60C, 2CNM-SOV60C

Failure Effect

Failure of the above valves has no significant effect.

3) 2CNM-HV119 and 2CNM-SOV119

Failure Effect

Failure of this valve has no significant effect.

b. Moisture Separator Vents and Drains (DSM, 32-7)

2DSM-LVZ75A, 2DSM-SOVZ75A; and 2DSM-LVZ75B, 2DSM-SOVZ75B

Failure Effect

Failure of the above valves to the closed position will cause high water level in the moisture separator drain receivers 2DSM-TK4A and B, resulting in dumping of the drains to the main condenser through valve 2DSM-LV78A and B, thus causing partial loss of feedwater heating in the fourth point heater 2CNM-E4C.

c. Moisture Separator Reheater Vents and Drains (DSR, 32-6)

1) 2DSR-SOVZ65A, 2DSR-LVZ65A, 2DSR-SOVZ65B, and 2DSR-LVZ65B

Failure Effect

If solenoid valve 2DSR-SOVZ65A (or 65B) fails control valve 2DSR-LVZ65A (or 65B) in the closed position, partial loss of sixth point feedwater heating will result.

2) 2DSR-AOV81C and 2DSR-SOV81C

Failure Effect

If the valve fails to closed position during normal reactor operation, partial loss of feedwater heating will result in the sixth point heater 2FWS-E6C.

d. Feedwater (FWS, 6-1)

2FWS-HV42C, 2FWS-SOV42C; and 2FWS-HV43C, 2FWS-SOV43C

Failure Effect

Failure of any or all of the above valves has no significant effect.

e. High Pressure Feedwater Heater Drains (HDH, 6-6)

1) 2HDH-LV6C, 2HDH-LT6C, 2HDH-SOV6C; 2HDH-LT26C, 2HDH-LS26C; 2HDH-LS7C

Failure Effect

If 2HDH-LV6C fails closed as a failure of instrumentation, partial heating of condensate at fifth point heater 2CNM-E5C will be lost.

If 2HDH-LT26C or LS26C fails, thereby signaling high level in sixth point heater 2FWS-E6C, 2HDH-LV26C will open to drain the heater to the condenser. This will bypass the heater drain to the fifth point heater 2CNM-E5C, resulting in loss of partial heating of condensate at the fifth point heater.

Failure of level switch 2HDH-LS26C will also close 2HDH-LV26C, resulting in loss of feedwater heating at the sixth point heater 2FWS-E6C.

If level switch 2HDH-LS7C fails, thereby signaling extreme high level in sixth point heater 2FWS-E6C, sixth point extraction steam isolation valve 2ESS-MOV3C and nonreturn valve 2ESS-NRV34C will close. This will result in loss of feedwater heating at sixth point heater 2FWS-E6C.

2) 2HDH-SOV29C

Failure Effect

Failure of the valve 2HDH-SOV29C in the close or open position has no significant effect.

f. Low Pressure Feedwater Heater Drains (HDL, 4-2)

1) 2HDL-FV35C, 2HDL-SOVX35C, and 2HDL-SOVY35C

Failure Effect

If the above valve fails in the open position, heater drain pump discharge flow to the condensate system will be reduced, thus causing partial loss of feedwater. If the valve fails in the closed position, it may result in heater drain pump overheating due to a low flow condition.

2) 2HDL-LT3C, 2HDL-LS9C, 2HDL-LT23C, and 2HDL-LS23C

Failure Effect

If 2HDL-LT3C, 2HDL-LT23C, and 2HDL-LS23C provide a signal such that the third point heater drain valves 2HDL-LV3C and 2HDL-LV23C fail in the closed position, it may cause.

flooding of the drain cooler and the third point heater, resulting in partial loss of feedwater heating.

If level switch 2HDL-LS9A causes inadvertent closure of the extraction steam isolation valve 2ESS-MOV15C, loss of feedwater heating in the third point heater will result.

3) 2HDL-LT4C (tubing), 2HDL-LS10C, 2HDL-LT24C, 2HDL-LS24C, and 2HDL-LS14C

Failure Effect

If 2HDL-LT4C causes 2HDL-LV4C to fail in the closed position, partial loss of feedwater will result. Failure of 2HDL-LV24C to the open position due to the failure of 2HDL-LT24C and 2HDL-LS24C will also result in a partial loss of feedwater. Failure of 2HDL-LS14C may cause heater drain pump 2HDL-P1C to trip, resulting in a partial loss of feedwater.

Failure of 2HDL-LS10C may cause closure of extraction steam valve 2ESS-MOV22C resulting in loss of feedwater heating in fourth point heater 2CNM-E4C.

4) 2HDL-LT5C, 2HDL-LS11C, 2HDL-LT25C, and 2HDL-LS25C

Failure Effect

If 2HDL-LT5C provides a signal such that fifth point heater drain valve 2HDL-LV5C fails closed, bypassing the fourth point heater 2HDL-E4C, partial loss of feedwater heating will result.

If 2HDL-LT25C or 2HDL-LS25C fails the fifth point heater drain bypass valve 2HDL-LV25C in the open position, the fourth point heater 2HDL-E4C is bypassed, resulting in partial loss of feedwater heating.

If 2HDL-LS11C fails, thereby signaling extreme high level in fifth point heater 2HDL-E5C, fifth point heater extraction steam isolation valve 2ESS-MOV28C will close, resulting in loss of feedwater heating at fifth point heater 2CNM-E5C.

5) 2HDL-LV4C

Failure Effect

If valve 2HDL-LV4C fails in the open position, fourth point heater low level switch 2HDL-LS14C will eventually trip the heater drain pump 2HDL-P1C. If the valve fails in the closed position, the same result will occur except for the heater drain pump trip.

6) 2HDL-LV5C and 2HDL-SOV5C

Failure Effect

Failure of the above level control valve in the closed position will cause bypassing of the fourth point heater 2CNM-E4C, resulting in partial loss of feedwater heating.

g. Instrument Air (IAS, 12-1)

2IAS-TS2A, 2IAS-TS2B, 2IAS-TS2C, 2IAS-TS4A, 2IAS-TS4B, and 2IAS-TS4C

Failure Effect

Failure to any of the above instruments will cause the instrument air compressors 2IAS-C1A, B, and C to trip. Tripping of instrument air compressors has no significant effect on reactor parameters.

h. Feedwater Heater Relief Vents and Drains (SVH, 32-14)

1) 2SVH-SOV26C, 2SVH-HV26C, 2SVH-SOV37C, and 2SVH-HV37C

Failure Effect

Failure of the above heater channel drain valve in open or closed position has no significant effect.

2) 2SVH-SOV27C, 2SVH-HV27C; 2SVH-SOV36C, 2SVH-HV36C; 2SVH-SOV52C, 2SVH-HV52C; 2SVH-SOV58C, 2SVH-HV58C

Failure Effect

Failure of the above shell vent valves of feedwater heaters in open or closed position has no significant effect.

3) 2SVH-HV31C, 2SVH-HV44C, 2SVH-SOV31C, and 2SVH-SOV44C

Failure Effect

If these shell vent valves fail open causing venting of third and fourth point heaters (c) to condenser, no significant effects result.

4) 2SVH-HV32C, 2SVH-HV45C, 2SVH-SOV32C, and 2SVH-SOV45C

Failure Effects

If these heat channel vent valves fail open causing venting of third and fourth point heaters (c) to the equipment drains, no significant impact results.

3. Combined Effect

a. A break in the auxiliary steam high energy line in this zone will result in a loss of condenser vacuum. Loss of condenser vacuum event is bounded by FSAR Section 15.2.5 analyses.

As a result of the high energy line break in this zone, control components in this zone or Zone D may fail, resulting in any or all of the following events:

1) Turbine trip (Zone D), an event bounded by FSAR Section 15.2.3 analyses.

2) Loss of condenser vacuum (Zone D), an event bounded by FSAR Section 15.2.5 analyses.

3) Loss of feedwater heating in 3rd, 4th, 5th, and 6th point heaters in the C string only (Zone H) and partial loss of 5th and 6th point heaters and second and third point drain coolers (Zone D), an event bounded by FSAR Section 15.1.1.

4) Loss of feedwater (Zone H, Item 2.f.3 and Zone D), an event bounded by FSAR Section 15.2.7 analyses.

5) Feedwater controller failure - maximum demand (Zone D), an event bounded by FSAR Section 15.1.2 analyses.

If the turbine trip occurs at a reactor power level elevated from initial operating value due to the loss of feedwater heating (caused by the failure of control components in this zone or zone D), the reactor may experience a change in critical power ratio greater than that described in the unacceptable results of incidents of moderate frequency anticipated operational transients of FSAR Chapter 15. See Section 3.0 for further discussion.

b. A break in the auxiliary condensate high energy line in this zone will result in a loss of feedwater heating in the third point heaters. Loss of feedwater heating event is bounded by FSAR Section 15.1.1 analyses.

The failure of control components [Item 2.b 2.c.1), 2.c.2), 2.e.1), 2.f.2), 2.f.3), 2.f.4), 2.f.5), or 2.f.6)] in this zone may also result in further reduction in feedwater heating, an event bounded by FSAR Section 15.1.1 analyses. In addition to this, failure of the control components [Item 2.f.1) or 2.f.3)] may result in a loss of feedwater. Loss of feedwater event is bounded by FSAR Section 15.2.7 analyses.

c. A break in any of the condensate high energy lines in this zone will result in a loss of feedwater. A break in feedwater line event is bounded by FSAR Section 15.6.6 analyses. In addition to this, a break in any of the high energy lines [Items 1.c.3)]

will result in a loss of feedwater heating, an event bounded by FSAR Section 15.1.1 analyses. For failure of control components in this zone or zone D, refer to Item 3.a.

d. A break in any of the moisture separator vents and drains high energy lines in this zone will result in a loss of feedwater heating in the fourth point heaters. Loss of feedwater heating is bounded by FSAR Section 15.1.1 analyses. For failure of control components in this zone or zone D, refer to Item 3.a.

e. A break in any of the moisture separator reheater vents and drains high energy lines in this zone will result in a loss of feedwater heating in the sixth point heaters. Loss of feedwater heating event is bounded by FSAR Section 15.1.1 analyses. For failure of control components in this zone or zone D, refer to Item 3.a.

f. A break in any of the extraction steam high energy lines in this zone will result in a loss of extraction steam to the third, fourth, fifth, or sixth point heater. Loss extraction steam will result in a loss of feedwater heating in the third, fourth, fifth, or sixth point heater. Loss of feedwater heating event is bounded by FSAR Section 15.1.1 analyses. For failure of control components in this zone or zone D, refer to Item 3.a.

g. A break in any of the feedwater high energy lines in this zone will result in a loss of feedwater, an event bounded by FSAR Section 15.6.6 analyses. For failure of control components in this zone or zone D, refer to Item 3.a.

h. 1) A break in any of the high pressure feedwater heater drain high energy lines [Item 1.h.1) or 1.h.2)] will result in a loss of feedwater heating in fifth and sixth point heaters. Loss of feedwater heating is bounded by FSAR Section 15.1.1 analyses. For failure of the control components in this zone or zone D, refer to Item 3.a.

2) A break in the high pressure feedwater heater drains high energy line [Item 1.h.3)] will result in a loss of main condenser vacuum, an event bounded by FSAR Section 15.2.5 analyses. The failure of any control component in this zone or zone D is described in Item 3.a.

i. 1) A break in any of the low pressure feedwater heater drains high energy lines [Item 1.i.1), 1.i.2), 1.i.3), 1.i.5), 1.i.7), 1.i.8) 1.i.10), 1.i.13), or 1.i.14)] will result in a loss of feedwater heating in second, third, fourth, or fifth point heater. Loss of feedwater heating event is bounded by FSAR Section 15.1.1 analyses. For failure of control components in this zone or zone D, refer to Item 3.a.

2) A break in any of the low pressure feedwater heater drains high energy lines [Item 1.i.7), or 1.i.14)] will result in a loss of feedwater, an event bounded by FSAR Section 15.6.6 analyses. For failure of control components in this zone or zone D, refer to Item 3.a.

3) A break in any of the low-pressure feedwater heater drains high energy lines [Item 1.i.4), 1.i.6), 1.i.9), 1.i.11), 1.i.12), 1.i.16), or 1.i.17)] will result in a loss of main condenser vacuum. Loss of condenser vacuum event is bounded by FSAR Section 15.2.5 analyses. The failure of any control components in the zone or zone D is described in Item 3.a.

j. A break in any of the feedwater heater relief, vents, and drains high energy lines in this zone will result in a loss of main condenser vacuum. Loss of condenser vacuum event is bounded by FSAR Section 15.2.5 analyses. The failure of any control component in this zone or zone D is described in Item 3.a.

APPENDIX D

HIGH ENERGY LINE BREAK ANALYSIS

ZONE J

Building: Turbine Building
Elevation: 277 ft 6 in.

	HELB System	Control System
CNA (4-4)	Auxiliary Condensate	None in this zone
DSM (32-7)	Moisture Separator Vents and Drains	
TME (16-1)	Turbine Generator Gland Seal and Exhaust	

1. The following is a list of high-energy lines analyzed on a system basis:

   a. Auxiliary Condensate (CNA, 4-4)

      1) Line No. 2CNA-006-002-4

         Function

         Carry condensate from reboiler drain tank 2CNA-TK1A to third point heaters.

         Failure Effect

         Partial loss of condensate and partial loss of condensate heating at third point heater.

      2) Line No. 2CNA-006-052-4, 2CNA-150-006-4

         Function

         Drain and vent lines to main condenser.

         Failure Effect

         Loss of main condenser vacuum.

   b. Moisture Separator Vents and Drains (DSM, 32-7)

      Line No. 2DSM-010-023-4

Function

Moisture separator drain receiver tank 2DSM-TK4B drain to fourth point heater 2CNM-E4C.

Failure Effect

Partial loss of fourth point feedwater heating and partial loss of condensate inventory.

c. Turbine Generator Gland Seal and Exhaust (TME, 16-1)

1) Line No. 2TME-008-419-4, 2TME-010-038-4

Function

Supplies steam to waste evaporator reboiler 2LWS-E4A and relief valve.

Failure Effect

Loss of main source for turbine generator gland seal and exhaust steam and partial loss of condensate.

2) Line No. 2TME-012-418-4

Function

Safety and relief valve drain lines to main condenser.

Failure Effect

Loss of main condenser vacuum.

2. There are no nonsafety-related control components located in this zone which could be affected by a high-energy line break on any of the lines listed in Item 1.

Additionally, a high energy line break in this zone will result in failure of control components in Zone D. The significant consequences of such a failure have been integrated into the analysis by referring to the appropriate "Failure Effect" from the above-listed zone in the "Combined Effect" section of this zone.

3. Combined Effect

a. A break in the auxiliary condensate high energy line in this zone results in loss of feedwater heating in third point heater, an event bounded by FSAR Section 15.1.1 analyses; in loss of feedwater/condensate, an event bounded by FSAR Section 15.6.6 analyses and in loss of main condenser vacuum bounded by FSAR Section 15.2.5 analyses.

As a result of high energy line break in this zone, control components in Zone D may fail, resulting in any or all of the following events:

1) Partial loss of feedwater heating in fifth and sixth point heaters and second and third point heater drain coolers and in only one of three fourth point heaters, an event bounded by FSAR Section 15.1.1 analyses.

2) Loss of feedwater, an event bounded by FSAR Section 15.2.7 analyses.

3) Turbine trip, an event bounded by FSAR Section 15.2.3.

4) Loss of condenser vacuum, an event bounded by FSAR Section 15.2.5 analyses.

5) Feedwater controller failure - maximum demand, an event bounded by FSAR Section 15.1.2 analyses.

b. A break in the moisture vents and drains high energy line in this zone results in loss of fourth point heater, an event bounded by FSAR Section 15.1.1 analyses; and loss of feedwater/condensate, an event bounded by FSAR Section 15.6.6 analyses. There are no nonsafety-related control components located in this zone which could be affected by high energy line break on any of the lines listed in Item 1. Failure of control components in Zone D is described in Item 3.a.

c. A break in the turbine generator gland seal and exhaust high energy line in this zone results in loss of feedwater/condensate, an event bounded by FSAR Section 15.6.6 analyses, and loss of main condenser vacuum, an event bounded by FSAR Section 15.2.5 analyses. There are no nonsafety-related control components located in this zone which could be affected by high energy line break on any of the lines listed in Item 1. Failure of control components in Zone D is described in Item 3.a.

APPENDIX D

HIGH ENERGY LINE BREAK ANALYSIS

ZONE L

Building: Turbine Building
Elevation: 277 ft 6 in.

HELB System		Control System	
CND (4-7)	Condensate Demineralizer	CND (4-7)	Condensate Demineralizer
CNM (4-1)	Condensate		

1. The following is a list of high-energy lines analyzed on a system basis:

   a. Condensate Demineralizer (CND, 4-7)

      1) Line No. 2CND-002-76-4, 2CND-002-77-4, 2CND-002-81-4

         Function

         Condensate sluicing water header.

         Failure Effect

         Partial loss of condensate.

   b. Condensate (CNM, 4-1)

      1) Line No. 2CNM-030-017-4

         Function

         Condensate pumps 2CNM-P1A, B, and C discharge header.

         Failure Effect

         Total loss of feedwater.

      2) Line No. 2CNM-030-018-4

         Function

         Air ejector intercondensers, 2ARC-E3A and B, inlet piping.

Failure Effect

Total loss of feedwater.

2. The following is the list of nonsafety-related control components that are affected by a high-energy line break on any of the lines listed in Item 1. The consequence of failure of each control component is analyzed. Refer to Appendix B for the function of individual components.

Additionally, a high energy line break in this zone will also result in failure of control components in Zone U. The significant consequences of such a failure have been integrated into the analysis by referring to the appropriate Failure Effect from the above listed zones in the Combined Effect section of this zone.

a. Condensate Demineralizer (CND, 4-7)

1) 2CND-AOV2A through 2CND-AOV2J, 2CND-AOV7A through 2CND-AOV7J

Failure Effect

Failure of any or all of the above valves in the close position will result in partial or total loss of condensate demineralizer system.

2) 2CND-AOV3A through 2CND-AOV3J, 2CND-AOV4A through 2CND-AOV4J, 2CND-AOV5A through 2CND-AOV5J, 2CND-AOV6A through 2CND-AOV6J

Failure Effect

Failure of any or all of the above valves has no significant effect on the reactor parameters.

3) 2CND-CE101, 2CND-CE105, 2CND-CE10A through 2CND-CE10J, 2CND-CE322, 2CND-CE323

Failure Effect

Failure of any or all of the above conductivity instruments has no significant effect on the reactor parameters.

3. Combined Effect

a. A break in any of the condensate demineralizer high energy lines in this zone will result in a loss of feedwater. A break in feedwater line event is bounded by FSAR Section 15.6.6 analyses.

The failure of control components (Item 2.a.1) in this zone may also result in a loss of feedwater due to the loss of condensate demineralizers. Loss of feedwater event is bounded by FSAR Section 15.2.7 analyses.

High energy line break in this zone may cause failure of the control components in the Zone U. Failure of the control components in Zone U does not exacerbate the event described above.

b. A break in any of the condensate high energy lines in this zone will result in a loss of feedwater, an event bounded by FSAR Section 15.6.6 analyses. For failure of the control components in this zone or Zone U, refer to Item 3.a.

APPENDIX D

HIGH ENERGY LINE BREAK ANALYSIS

ZONE N

Building: Turbine Building
Locations: El 277 ft 6 in.

	HELB System		Control System
ARC (5-1)	Condenser Air Removal	ARC (5-1)	Condenser Air Removal
ASS (3-9)	Auxiliary Steam	ASS (3-9)	Auxiliary Steam
CNM (4-1)	Condensate		
DTM (32-5)	Turbine Building Miscellenous Drains		

1. The following is a list of high energy lines analyzed on a system basis:

   a. Condenser Air Removal (ARC, 5-1)

      1) Line No. 2ARC-006-099-4

         Function

         Condenser air removal system intercondenser 2ARC-E3A safety valve inlet line.

         Failure Effect

         Inadvertent release of untreated offgas.

      2) Line Nos. 2ARC-008-010-4, 2ARC-008-012-4, 2ARC-012-009-4, 2ARC-012-605-4

         Function

         Condenser air removal air ejector discharge to off-gas system.

         Failure Effect

         Loss of off-gas treatment and inadvertent release of untreated off-gas to the turbine building.

3) Line Nos. 2ARC-010-607-4, 2ARC-025-015-4

Function

Condenser air removal intercondenser 2ARC-E3A safety valve discharge and drain lines to main condenser.

Failure Effect

Loss of main condenser vacuum.

b. Auxiliary Steam (ASS, 3-9)

1) Line Nos. 2ASS-002-103-4, 2ASS-002-132-4, 2ASS-002-151-4

Function

Auxiliary steam supply to off-gas system preheaters.

Failure Effect

Partial loss of steam from either main or auxiliary steam and reduction in off-gas treatment capability.

2) Line Nos. 2ASS-004-023-4, 2ASS-004-092-4, 2ASS-006-025-4, 2ASS-025-058-4

Function

Auxiliary steam supply to condenser air removal system.

Failure Effect

Partial loss of either main or auxiliary steam and loss of steam air ejectors.

c. Condensate (CNM, 4-1)

Line Nos. 2CNM-030-018-4, 2CNM-030-022-4, 2CNM-030-174-4

Function

Main condensate to and from air ejector intercondensers 2ARC-E3A and E3B.

Failure Effect

Loss of condensate/feedwater flow.

d. Turbine Building Miscellaneous Drains (DTM, 32-5)

Line Nos. 2DTM-125-145-4, 2DTM-150-146-4

Function

Condenser air removal system steam line strainer blowdown drains to main condenser.

Failure Effect

Loss of main condenser vacuum.

2. The following is the list of nonsafety-related control components that are affected by a high energy line break on any of the lines listed in Item 1. The consequence of failure of each control component is analyzed. Refer to Appendix B for function of individual components.

Additionally, a high energy line break in this zone will also result in failure of control components in Zone D. The significant consequences of such a failure have been integrated into the analysis by referring to the appropriate "Failure Effect" from the above-listed zone(s) in the "Combined Effect" section of this zone.

a. Condenser Air Removal (ARC, 5-1)

2ARC-HV16A, 2ARC-SOV16A; 2ARC-HV17A, 2ARC-SOV17A

Failure Effect

If the above strainer blowdown valve 2ARC-HV16A (2ARC-HV17A) fails either closed or open, there is no significant effect.

b. Auxiliary Steam (ASS, 3-9)

2ASS-PV125, 2ASS-SOV125

Failure Effect

If the control valve fails in the closed position, then off-gas preheaters 20FG-E1A and E1B may be lost resulting in reduced off-gas catalytic recombiners 20FG-RBNR1A and 1B performance. Auxiliary steam is the backup supply for this system.

3. Combined Effects

a. A break in the condenser air removal high energy lines (Item 1.a.1 and 1.a.2) results in release of untreated off-gas within the turbine building. This event is bounded by FSAR Section 15.7 analyses. The failure of any control component in this zone does not exacerbate this event. A break in condenser air removal high energy line (Item 1.a.3) results in a loss of main condenser vacuum. This event is bounded by FSAR Section 15.2.5 analysis. The failure of any control component in this zone does not exacerbate this event.

As a result of high energy line break in this zone, control components in Zone D may fail resulting in any or all of the following events:

1) Partial loss of feedwater heating in the 5th and 6th point heaters and second and third point heater drain coolers and in only one of three fourth point heaters, an event bounded by FSAR Section 15.1.1 analyses.

2) Loss of feedwater, an event bounded by FSAR Section 15.2.7 analyses.

3) Turbine trip, an event bounded by FSAR Section 15.2.3 analyses.

4) Loss of condenser vacuum, an event bounded by FSAR Section 15.2.5 analyses.

5) Feedwater controller failure - maximum demand, an event bounded by FSAR Section 15.1.2 analyses.

b. A break in the auxiliary steam high energy lines (Item 1.b.1 and 1.b.2) results in a loss of main condenser vacuum. This event is bounded by FSAR Section 15.2.5. The failure of any control component in this zone causes reduced off-gas system performance, resulting in radioactive release from subsystem components, bounded by FSAR Section 15.7 analyses. For failure of control components in Zone D, refer to Item 3.a.

c. A break in the condensate system high energy lines to and from the air ejector intercondensers results in loss of condensate/feedwater. This event is bounded by FSAR Section 15.2.7 analyses. The failure of any control components in this zone does not exacerbate this event. For failure of control components in Zone D, refer to Item 3.a.

d. A break in the turbine building miscellaneous drains high energy lines in this zone will result in loss of main condenser vacuum. This event is bounded by FSAR Section 15.2.5 analyses. The failure of any control components in this zone causes reduced off-gas system performance, resulting in radioactive release from subsystem components, bounded by FSAR Section 15.7 analyses. For failure of control components in Zone D, refer to Item 3.a.

APPENDIX D

HIGH ENERGY LINE BREAK ANALYSIS

ZONE P

Building: Turbine Building
Locations: El 277 ft 6 in.

HELB System		Control System	
ARC (5-1)	Condenser Air Removal	ARC (5-1)	Condenser Air Removal
ASS (3-9)	Auxiliary Steam	ASS (3-9)	Auxiliary Steam
CNM (4-1)	Condensate		
DTM (32-5)	Turbine Building Miscellaneous Drains		

1. The following is a list of high energy lines analyzed on a system basis:

   a. Condenser Air Removal (ARC, 5-1)

      1) Line No. 2ARC-010-607-4, 2ARC-010-608-4, 2ARC-025-016-4

         Function

         Safety valve and drain lines to main condenser.

         Failure Effect

         Loss of main condenser vacuum.

      2) Line No. 2ARC-008-11-4, 2ARC-012-9-4, 2ARC-008-008-4

         Function

         Supply diluted steam to offgas removal system.

         Failure Effect

         Loss of offgas treatment and inadvertant release of untreated offgas.

      3) Line No. 2ARC-006-98-4

         Function

         Offgas system into condenser 2ARC-E3B to safety valve.

Failure Effect

Inadvertant release of untreated offgas.

b. Auxiliary Steam (ASS, 3-9)

1) Line No. 2ASS-006-126-4, 2ASS-006-128-4, 2ASS-008-19-4, 2ASS-008-142-4, 2ASS-006-18-4, 2ASS-004-403-4, 2ASS-006-25-4, 2ASS-006-27-4, 2ASS-025-57-4, 2ASS-004-24-4, 2ASS-150-107-4, 2ASS-150-507-4, 2ASS-025-22-4

Function

Steam supply to condenser air removal system.

Failure Effect

Partial loss of either main steam or auxiliary steam and loss of offgas steam air ejectors.

2) Line No. 2ASS-003-502-4, 2ASS-010-520-4

Function

Safety valve drains to main condenser.

Failure Effect

Loss of main condenser vacuum.

c. Condensate (CNM, 4-1)

Line No. 2CNM-030-20-4, 2CNM-030-22-4

Function

Condensate supply to and from air ejector intercondenser 2ARC-E3B.

Failure Effect

Loss of condensate flow.

d. Turbine Building Miscellaneous Drains (DTM, 32-5)

1) Line No. 2DTM-125-143-4, 2DTM-150-144-4, 2DTM-125-145-4, 2DTM-150-146-4

Function

Condenser air removal system steam line strainer blow down drains to main condenser.

Failure Effect

Loss of main condenser vacuum.

2) Line No. 2DTM-150-135-4, 2DTM-150-473-4

Function

Loss of main condenser vacuum.

2. The following is the list of nonsafety-related control components that are affected by a HELB on any of the lines listed in Item 1. The consequence of failure of each control component is analyzed. Refer to Appendix B for function of individual components.

Additionally, a high energy line break in this zone will also result in failure of control components in Zone D. The significant consequences of such a failure have been integrated into the analysis by referring to the appropriate "Failure Effect" from the above-listed zone(s) in the "Combined Effect" section of this zone.

a. Condenser Air Removal (ARC, 5-1)

2ARC-HV16B, 2ARC-SOV16B;
2ARC-HV17B, 2ARC-SOV17B

Failure Effect

If the above strainer blowdown valve 2ARC-HV16B (2ARC-HV17B) fails either closed or open, there is no significant effect.

b. Auxiliary Steam (ASS, 3-9)

2ASS-PV107, 2ASS-SOV107;
2ASS-PV139, 2ASS-SOV139

Failure Effect

If the control valves fail in the closed position, the main steam supply to the condenser air removal system may be reduced or lost. If the backup auxiliary steam supply valve 2ASS-AOV147 also fails close, then the condenser air removal system is lost which results in loss of condenser vacuum.

3. Combined Effects

a. A break in the condenser air removal system high energy line in this zone results in loss of main condenser vacuum bound by FSAR Section 15.2.5, or loss of offgas treatment and inadvertant release of untreated offgas bound by FSAR Section 15.7 analyses. Failure of control components in this zone does not exacerbate this event.

As a result of high energy line break in this zone, control components in Zone D may fail, resulting in any or all of the following events:

1) Partial loss of feedwater heating in the 5th and 6th point heaters and second and third point heater drain coolers and in only one of three fourth point heaters, an event bounded by FSAR Section 15.1.1 analyses.

2) Loss of feedwater, an event bounded by FSAR Section 15.2.7 analyses.

3) Turbine trip, an event bounded by FSAR Section 15.2.3 analyses.

4) Loss of condenser vacuum, an event bounded by FSAR Section 15.2.5 analyses.

5) Feedwater controller failure - maximum demand, an event bounded by FSAR Section 15.1.2 analyses.

b. A break in the auxiliary steam system high energy line in this zone results in loss of main condenser vacuum bound by FSAR Section 15.2.5 analyses, or loss of steam to offgas air ejectors which produces a very slow rate of loss of main condenser vacuum bound by FSAR Section 15.2.5.3.4 analyses. Failure of control components in this zone does not exacerbate this event. Refer to 3.a above for failure of Zone D control components.

c. A break in the condensate system high energy line in this zone results in loss of condensate/feedwater flow bound by FSAR Section 15.6.6 analyses for a line break in feedwater outside containment. Failure of control components in this zone results in loss of condenser vacuum bounded by FSAR Section 15.2.5 analyses. Refer to 3.a above for failure of Zone D control components.

d. A break in turbine building miscellaneous drains high energy line in this zone results in loss of condenser vacuum bound by FSAR Section 15.2.5 analyses. Failure of the control components in this zone does not exacerbate this event. Refer to 3.a above for failure of Zone D control components.

APPENDIX D

HIGH ENERGY LINE BREAK ANALYSIS

ZONE R

Building: Turbine Building
Elevation: 277 ft 6 in.

HELB System		Control System	
TME (16-1)	Turbine Generator Gland Seal and Exhaust	CCS (9-7)	Turbine Plant Component Cooling Water
		TML (16-2)	Turbine Generator Lube Oil

1. The following is a list of high-energy lines analyzed on a system basis:

Turbine Generator Gland Seal and Exhaust (TME, 16-1)

a. Line No. 2TME-006-041-4

Function

Main steam supply pressure control valve 2TME-PV122 to turbine generator gland seal and exhaust steam supply pressure reducing valve (2TME-PV111).

Failure Effect

Loss of this line will cause the main steam backup supply to the turbine generator gland seal and exhaust system to be lost. This will cause gradual loss of condenser vacuum through the connected turbine plant miscellaneous drains line to the main condenser.

b. Line No. 2TME-008-084-4

Function

Clean steam boiler 2TME-E1A shell side safety valve discharge to main condenser.

Failure Effect

Loss of main condenser vacuum.

c. Line No. 2TME-008-085-4

Function

Clean steam boiler 2TME-E1B shell side safety valve discharge to main condenser.

Failure Effect

Loss of condenser vacuum.

2. The following is the list of nonsafety-related control components that are affected by a high-energy line break on any of the lines listed in Item 1. The consequence of failure of each control component is analyzed. Refer to Appendix B for the function of individual components.

Additionally, a high energy line break in this zone will also result in failure of control components in Zone S. The significant consequences of such a failure have been integrated into the analysis by referring to the appropriate Failure Effect from the above listed zone in the Combined Effect section of this zone.

a. Turbine Plant Component Cooling Water (CCS, 9-7)

2CCS-TV43A, 2CCS-TV43B

Failure Effect

Failure of the above valves to the closed position will cause loss of turbine lube oil cooling resulting in higher turbine bearing temperature.

b. Turbine Generator Lube Oil (TML, 16-2)

1) 2TML-PS102, 2TML-SOV114

Failure Effect

Failure of this pressure switch or SOV will prevent automatic start of the ac motor-driven suction oil pump 2TML-P3, which supplies suction pressure to the main shaft-driven oil pump either during startup or when oil-driven booster pump discharge pressure drops to a predetermined value.

2) 2TML-PS103, 2TML-PS104, 2TML-SOV115

Failure Effect

Failure of these pressure switches or valve to allow automatic start of the turning gear oil pump 2TM2-P4 on low pressure has no significant effect when the turbine is not on turning gear. However, this pump also serves as a

backup to the main shaft-driven oil pump. A dc motor-driven emergency bearing oil pump also is provided in case of failure of both the ac power or turning gear oil pump failure.

3) 2TML-PS105

Failure Effect

Failure of this pressure switch will prevent automatic start of the lift pumps for turbine generator lube oil system.

4) 2TML-PS106, 2TML-PS107, 2TML-SOV117, 2TML-SOV118

Failure Effect

Failure of these control components will prevent automatic start of the emergency bearing oil pump 2TML-PS. This pump is used as a backup of main shaft oil pump and turning gear oil pump, both of which are used during startup. Therefore, failure of the pressure switches will not impact normal operation of the plant.

5) 2TML-PS127

Failure Effect

Failure of this pressure switch may cause inadvertent turbine trip or the failure to trip the turbine on turbine shaft pump lube oil discharge pressure low.

6) 2TML-PS101, 2TML-SOV116

Failure Effect

Failure of these instruments will prevent automatic start of the turning gear piggyback motor. Since this motor is used for startup or turning gear operation only, it will not impact normal operation of the plant.

7) 2TML-SOV13A, 2TML-SOV13B, 2TML-SOV13C, 2TML-SOV13D, 2TML-SOV13E, 2TML-SOV13F, 2TML-SOV13G

Failure Effect

Failure of these valves will cause inadvertent testing of the respective turbine-generator lift oil pumps (2TML-P6A through P6H) by dumping pressure-to-pressure switches 2TML-14A through 14H, causing the pumps to stop. Since these pumps are used only at very low turbine-generator rpms, failure of the solenoid valves will not impact normal operation of the plant.

8) 2TML-TS2A, 2TML-TS2B, 2TML-TS2C, 2TML-TS2D, 2TML-TS2E, 2TML-TS2F, 2TML-TS2G, 2TML-TS2H

Failure Effect

Failure of these turbine-generator lube oil lift pump motor temperature switches have no significant effect during normal operation of the plant, since the lift pumps (2TML-P6A through P6H) are used only at very low turbine-generator rpms.

3. Combined Effect

a. A break in the turbine generator gland seal and exhaust high energy line in this zone (Item 1.a) will result in a gradual loss of condenser vacuum. This event is bounded by FSAR Section 15.2.5 analyses.

Failure of control components in this zone or zone S may lead to loss of the turbine lube oil system or lube oil cooling. A turbine trip will ultimately occur due to loss of lube oil or high vibration. This event is bounded by FSAR Section 15.2.3 analyses.

b. A break in the turbine generator gland seal and exhaust high energy lines in this zone (Items 1.b, 1.c) will cause a turbine trip due to loss of main condenser vacuum. This event is bounded by FSAR Section 15.2.5 analysis. Failure of control components will not exacerbate this event.

APPENDIX D

HIGH ENERGY LINE BREAK ANALYSIS

ZONE S

Building: Turbine Building
Elevation: 277 ft 6 in.

HELB System		Control System	
TME (16-1)	Turbine Generator Gland Seal and Exhaust	ASS (3-9)	Auxiliary Steam
		CCS (9-7)	Turbine Plant Component Cooling Water
		CRS (3-2)	Cold Reheat
		MSS (3-1)	Main Steam
		TME (16-1)	Turbine Generator Gland Seal and Exhaust

1. The following is a list of high-energy lines analyzed on a system basis:

   Turbine Generator Gland Seal and Exhaust (TME, 16-1)

   Line No. 2TME-012-077-4

   Function

   Turbine generator gland seal steam supply header safety valve 2TME-SV124 discharge to main condenser.

   Failure Effect

   Loss of condenser vacuum.

2. The following is the list of nonsafety-related control components that are affected by a high-energy line break on any of the lines listed in Item 1. The consequence of failure of each control component is analyzed. Refer to Appendix B for the function of individual components.

a. Auxiliary Steam (ASS, 3-9)

2ASS-PIC113, 2ASS-PIC146

Failure Effect

If failure of the above instruments drives valves 2ASS-PV113 and 2ASS-PV146 to the fail-closed position, main steam auxiliary boiler steam supply to the clean steam reboilers (2TME-E1A and B) will be lost. Extraction from the fourth point will normally supply the reboilers; if this source is also lost, then turbine gland sealing steam would be lost, resulting in gradual loss of condenser vacuum.

b. Turbine Plant Component Cooling Water (CCS, 9-7)

2CCS-I/P43A, 2CCS-I/P43B

Failure Effect

Failure of the above instruments may cause turbine closed loop cooler temperature control valves 2CCS-TV-43A and 2CCS-TV43B to fail in the closed position, resulting in loss of turbine lube oil cooling, thus causing higher turbine bearing temperature.

c. Cold Reheat (CRS, 3-2)

2CRS-PT103

Failure Effect

Failure of the above instrument may cause inadvertent closure of moisture separation main steam supply valves 2MSS-PV28A, 2MSS-PV28B, 2MSS-PV29A, and 2MSS-PV29B, which can result in reduction of hot reheat steam temperature to low-pressure turbines.

d. Main Steam (MSS, 3-1)

1) 2MSS-AOV88A, 2MSS-SOV88A, 2MSS-AOV88B, 2MSS-SOV88B

Failure Effect

Failure of the above air-operated valves in the closed position may cause water buildup in the main steam header to the HP turbine, which may cause water induction to the HP turbine, resulting in turbine trip.

2) 2MSS-PT101

Failure Effect

If the above instrument provides a signal level during low main steam inlet header pressure, which drives the main

steam reboiler trip valve 2ASS-STV112 to the open position and the auxiliary boiler steam supply valve 2ASS-PV146 to the reboiler to the closed position, no significant effect results.

3) 2MSS-PT22B, 2MSS-PT22A

Failure Effect

Failure of the above instrument, which causes closure of moisture separator main steam supply valves 2MSS-PV28B or A and PV29B or A, will result in reduction of hot reheat temperature to the LP turbines.

4) 2MSS-PT96B (C12-N054-B), 2MSS-PT96A (C12-N054-A)

Failure Effect

Failure of these first stage turbine pressure transmitters would result in loss of the low power set point (LPSP) and low power alarm point (LPAP). This would not affect reactor parameters.

e. Turbine Generator Gland Seal and Exhaust System (TME, 16-1)

1) 2TME-LIC13A, 2TME-LIC13B, 2TME-LT13A (tubing), 2TME-LV13A (tubing), 2TME-LT13B (tubing), 2TME-LV13B (tubing)

Failure Effect

If the above instrumentation fails closed, the condensate source to the clean steam boilers (2TME-E1A, E1B) will be lost.

In addition, there is an alternate source from the main steam system for gland seal and exhaust steam.

If the failure causes the condensate source level control valves to the clean steam reboilers (2TME-E1A, E1B) to fail open, then condensate may rise in the reboilers and infiltrate into the turbine gland seal and exhaust steam system. This will cause water induction into the low-pressure turbine, resulting in high turbine vibrations, which may lead to turbine trip.

2) 2TME-PIC122

Failure Effect

If this instrument causes emergency pressure control valve 2TME-PV122 for the turbine generator gland seal and ex-

haust steam to close, then the main steam backup supply will be lost. Normal supply is from the clean steam reboilers, 2TME-E1A or 2TME-E1B. If this supply is lost, condenser vacuum will eventually be lost.

3. Combined Effect

Failure of the turbine generator gland seal and exhaust high energy line in this zone will result in loss of main condenser vacuum. This event is bounded by FSAR Section 15.2.5 analyses. Failure of control components in this zone may result in misoperation of rod sequence control system (RSCS) which may lead to reactor scram, an event bounded by FSAR Section 15.4 analyses.

APPENDIX D

HIGH ENERGY LINE BREAK ANALYSIS

ZONE U

Building: Turbine Building
Elevation: 277 ft 6 in.

HELB System		Control System
None	CND (4-7)	Condensate Demineralizer

1. There is no high energy line in this zone.

2. The following is the list of nonsafety-related control components in this zone. Although there are no high energy lines in this zone, control components in this zone may be affected by high energy lines in other zones as described in Item 3. The consequence of failure of each control component is analyzed. Refer to Appendix B for the function of individual components.

   a. Condensate Demineralizer (CND, 4-7)

      2CND-AOV218 through 2CND-AOV224, 2CND-AOV226 through 2CND-AOV233, 2CND-FCV225, 2CND-PCV234, 2CND-FIS238, 2CND-FIS264, 2CND-LS235

      Failure Effect

      Failure of any or all of the above instruments has no significant effect on reactor parameters.

3. Combined Effect

   Since this zone is environmentally connected to Zone L, high energy line break in Zone L may cause failure of the control components in this zone. Failure of the control components in this zone will not exacerbate the event that could be caused by the high energy line break in Zone L.

APPENDIX D

HIGH ENERGY LINE BREAK ANALYSIS

ZONE W

Building: Turbine Building
Locations: El 250 ft 0 in.

HELB System		Control System	
ASS (3-9)	Auxiliary Steam	ASS (3-9)	Auxiliary Steam
CNA (4-4)	Auxiliary Condensate		
DTM (32-5)	Turbine Building Miscellaneous Drains		
HVH (22-16)	Hot Water Heating		

1. The following is a list of high energy lines analyzed on a system basis:

   a. Auxiliary Steam (ASS, 3-9)

      Line No. 2ASS-006-38-4, 2ASS-006-400-4, 2ASS-006-505-4, 2ASS-006-506-4, 2ASS-150-110-4, 2ASS-150-111-4, 2ASS-150-515-4, 2ASS-150-516-4

      Function

      Steam supply to building heating intermediate heat exchangers 2HVH-E1A, -E1B.

      Failure Effect

      Partial loss of main steam or fifth point extraction steam and loss of building heating and partial loss of feedwater heating at fifth point heaters if extraction steam is the source of supply. (Normal supply is from fifth point extraction steam.)

   b. Auxiliary Steam (CNA, 4-4)

      1) Line No. 2CNA-003-303-4, 2CNA-003-304-4

         Function

         Safety valve drain to main condenser.

Failure Effect

Loss of main condenser vacuum.

2) Line No. 2CNA-150-19-4, 2CNA-150-21-4, 2CNA-002-23-4, 2CNA-002-25-4, 2CNA-002-26-4, 2CNA-002-28-4, 2CNA-002-604-4, 2CNA-002-607-4, 2CNA-002-608-4, 2CNA-002-611-4, 2CNA-004-24-4, 2CNA-004-48-4, 2CNA-004-652-4, 2CNA-004-653-4

Function

Instrument standpipes, drain and vent lines to main condenser.

Failure Effect

Partial loss of supply steam and partial loss of condensate inventory.

c. Turbine Building Miscellaneous Drains (DTM, 32-5)

1) Line No. 2DTM-150-479-4, 2DTM-150-480-4

Function

Building heating heat exchangers low point drains to main condenser.

Failure Effect

Loss of main condenser vacuum.

2) Line No. 2DTM-150-139-4, 2DTM-150-140-4

Function

Auxiliary steam low point drains.

Failure Effect

Partial loss of fourth or fifth point extraction steam and partial loss of fourth or fifth point feedwater heating.

d. Hot Water Heating (HVH, 22-16)

Line No. 2HVH-006-6-4 through 2HVH-006-9-4

Function

Turbine building intermediate heat exchanger 2HVH-E1A and -E1B hot water supply and discharge lines.

Failure Effect

Loss of turbine building heating.

2. The following is the list of nonsafety-related control components that are affected by a HELB on any of the lines listed in Item 1. The consequence of failure of each control component is analyzed. Refer to Appendix B for function of individual components.

Additionally, a high energy line break in this zone will also result in failure of control components in Zone D. The significant consequences of such a failure have been integrated into the analysis by referring to the appropriate "Failure Effect" from the above-listed zone(s) in the "Combined Effect" section of this zone.

Auxiliary Steam (ASS, 3-9)

2ASS-TV5A, 2ASS-SOV5A; 2ASS-TV5B, 2ASS-SOV5B

Failure Effect

Failure of the above valves in either the open or closed position has no significant effect.

3. Combined Effects

a. A break in auxiliary steam high energy line in this zone results in reduction of fifth point feedwater heating. This event is bound by FSAR Section 15.1.1 analyses. Control component failure in this zone has no significant effect.

Additionally, failure of control components in Zone D may result in the following events:

1) Loss of feedwater, an event bounded by FSAR Section 15.2.7 analyses.

2) Feedwater controller failure - maximum demand, an event bounded by FSAR Section 15.1.2 analyses.

3) Partial loss of feedwater heating in fifth and sixth point heaters and second and third point heater drain coolers and in only one of three fourth point heaters, an event bounded by FSAR Section 15.1.1 analyses.

4) Turbine trip, an event bounded by FSAR Section 15.2.3.

5) Loss of main condenser vacuum, bounded by FSAR Section 15.2.5 analyses.

For a detailed discussion of these events, refer to Appendix D, Zone D, Section 3.

b. A break in auxiliary condensate high energy line in this zone results in loss of main condenser vacuum bound by FSAR Section 15.2.5 analyses and partial loss of condensate inventory and feedwater heating at fifth point heaters bound by FSAR Section 15.1.1 analyses. Control components failure in this zone has no significant effect. Refer to Section 3.a for control component failure in Zone D.

c. A break in turbine building miscellaneous drains high energy line in this zone results in loss of main condenser vacuum bound by FSAR Section 15.2.5 analyses and partial loss of feedwater heating in fourth or fifth point heaters. Loss of feedwater heating is bound by FSAR Section 15.1.1 analyses. Control component failure in this zone has no significant effect. Refer to Section 3.a for control component failure in Zone D.

d. A break in the hot water heating high energy line in this zone causing loss of turbine building heating has no impact on reactor parameters. Control component failure in this zone has no significant effect. A failure of control component in Zone D is highly unlikely due to release of hot water from this break in this zone. In the event these failures do occur, they are summarized in Section 3.a above.

APPENDIX D

HIGH ENERGY LINE BREAK ANALYSIS

ZONE X

Building: Turbine Building
Elevation: 250 ft 0 in.

HELB System		Control System	
CND (4-7)	Condensate Demineralizer	CND (4-7)	Condensate Demineralizer
CNM (4-1)	Condensate		

1. The following is a list of high-energy lines analyzed on a system basis:

   a. Condensate Demineralizer (CND, 4-7)

      1) Line No. 2CND-002-075-4

         Function

         Strainer blowdown line to sump 2CND-SUMP1.

         Failure Effect

         Partial loss of condensate. (Valves in system are manually operated.)

      2) Line No. 2CND-002-076-4

         Function

         Condensate sluicing water header.

         Failure Effect

         Partial loss of condensate. (Valves in system are manually operated.)

      3) Line No. 2CND-002-077-4

         Function

         Strainer blowdown line to waste neutralizer tank 2CND-TK12.

Failure Effect

Partial loss of condensate. (Valves manually operated.)

b. Condensate (CNM, 4-1)

1) Line Nos. 2CNM-020-039-4, 2CNM-020-040-4, 2CNM-020-041-4

Function

Condensate booster pumps' 2CNM-P2A, B, and C discharge line.

Failure Effect

Partial or total loss of feedwater.

2) Line No. 2CNM-030-042-4

Function

Condensate booster pumps' 2CNM-P2A, B, and C discharge header.

Failure Effect

Total loss of feedwater.

2. The following is the list of nonsafety-related control components that are affected by a high-energy line break on any of the lines listed in Item 1. The consequences of failure of each control component is analyzed. Refer to Appendix B for the function of individual components.

Additionally, a high energy line break in this zone will also result in failure of control components in Zone D. The significant consequences of such a failure have been integrated into the analysis by referring to the appropriate Failure Effect from the above listed zones in the Combined Effect section of this zone.

a. 2CND-AOV106, 2CND-AOV108, 2CND-AOV113 through 2CND-AOV118, 2CND-AOV124, 2CND-AOV125, 2CND-AOV129 through 2CND-AOV138, 2CND-AOV140 through 2CND-AOV146, 2CND-AOV148, 2CND-AOV149, 2CND-AOV150, 2CND-AOV155, 2CND-AOV156, 2CND-AOV162 through 2CND-AOV166, 2CND-AOV174, 2CND-AOV183, 2CND-AOV184, 2CND-AOV194, 2CND-AOV195, 2CND-AOV196, 2CND-AOV206, 2CND-AOV207, 2CND-AOV208, 2CND-AOV216, 2CND-AOV271, 2CND-SOV271, 2CND-AOV273, 2CND-SOV273, 2CND-AOV276, 2CND-AOV277, 2CND-AOV309, 2CND-AOV310, 2CND-AOV320, 2CND-AOV321, 2CND-AOV334, 2CND-AOV335, 2CND-AOV338, 2CND-SOV338, 2CND-AOV339, 2CND-SOV339, 2CND-AOV341, 2CND-AOV342, 2CND-PV121, 2CND-PV188, 2CND-TV199

Failure Effect

Failure of any or all of the above valves in close or open position has no significant effect on reactor parameters.

2) 2CND-CEC157, 2CND-CE158, 2CND-CE159, 2CND-CE198, 2CND-CE251, 2CND-CE268, 2CND-CE308, 2CND-FIS190, 2CND-FIS213, 2CND-LS256, 2CND-LS28A, 2CND-LS28B, 2CND-LT169, 2CND-LT178, 2CND-LT267, 2CND-LT281, 2CND-TIS176, 2CND-TIS187, 2CND-TIS199, 2CND-TIS311, 2CND-TS211, 2CND-LS185, 2CND-LS283, 2CND-LS345

Failure Effect

Failure of any or all of the above instruments has no significant effect on reactor parameters.

3. Combined Effect

a. A break in any of the condensate demineralizer high energy lines in this zone will result in a loss of feedwater. A break in feedwater line event is bounded by FSAR Section 15.6.6 analyses. The failure of any control component in this zone does not exacerbate this event.

As a result of high pressure line break in this zone, control components in Zone D may fail, resulting in any or all of the following events:

1) Partial loss of feedwater heating in the 5th and 6th point heaters and second and third point heater drain coolers and in only one of three fourth point heaters in Zone D, an event bounded by FSAR Section 15.1.1 analyses.

2) Loss of feedwater (Zone D), an event bounded by FSAR Chapter 15.2.7 analyses.

3) Turbine trip (Zone D), an event bounded by FSAR Section 15.2.3 analyses.

4) Loss of condenser vacuum (Zone D), an event bounded by FSAR Section 15.2.5 analyses.

5) Feedwater controller failure - maximum demand (Zone D), an event bounded by FSAR Section 15.1.2 analyses.

b. A break in any of the condensate high energy lines in this zone will result in a loss of feedwater, an event bounded by FSAR Section 15.6.6 analyses. The failure of any control component in this zone does not exacerbate this event. For failure of control components in Zone D, refer to Item 3.a.

APPENDIX D

HIGH ENERGY LINE BREAK ANALYSIS

ZONE Z

Building: Turbine Building
Locations: El 250 ft 0 in.

HELB System		Control System	
AAS (12-9)	Breathing Air	CCP (9-1)	Reactor Plant Component Cooling Water
HVH (22-16)	Hot Water Heating	IAS (12-1)	Instrument Air
IAS (12-1)	Instrument Air		

1. The following is a list of high energy lines analyzed on a system basis:

   a. Breathing Air (AAS, 12-9)

      Line No. 2AAS-004-102-4

      Function

      Breathing air from air compressor 2AAS-C1 to aftercooler 2AAS-E1.

      Failure Effect

      No significant effect.

   b. Hot Water Heating (HVH, 22-16)

      Line Nos. 2HVH-004-025-4, 2HVH-004-026-4

      Function

      Heating hot water supply and return lines to radwaste building.

      Failure Effect

      Loss of turbine building, radwaste building and reactor building heating.

   c. Instrument Air (IAS, 12-1)

      Line Nos. 2IAS-006-102-4, 2IAS-006-202-4, 2IAS-006-302-4

Function

Air compressor discharge lines to aftercoolers.

Failure Effect

No significant effect.

2. The following is the list of nonsafety-related control components that are affected by a high energy line break on any of the lines listed in Item 1. The consequence of failure of each control component is analyzed. Refer to Appendix B for function of individual components.

Additionally, a high energy line break in this zone will also result in failure of control components in Zone D. The significant consequences of such a failure have been integrated into the analysis by referrring to the appropriate "Failure Effect" from the above-listed zone(s) in the "Combined Effect" section of this zone.

a. Reactor Plant Component Cooling Water (CCP, 9-1)

1) 2CCP-AOV180, 2CCP-SOV180
2CCP-PS25A, 2CCP-PS25B
2CCP-FISX128, 2CCP-FISY128
2CCP-LSX180, 2CCP-LSY180

Failure Effect

If valve 2CCP-AOV180 fails in the closed position at low level in expansion tank 2CCP-TK2, or because of level switch failure, closed loop cooling water pumps 2CCP-P2A and B will trip on low suction pressure which will eventually trip the instrument air compressors 2IAS-C1A, B, and C on high temperature of compressor precooler or aftercooler.

Failure of pressure switches 2CCP-PS25A, B will trip the closed loop cooling water pumps 2CCP-P2A and B which will eventually trip the instrument air compressors as described above.

Failure of flow switches 2CCP-FISX128 and 2CCP-FISY128 may cause failure to start the standby closed loop cooling water pump 2CCP-P2A or 2B which may ultimately trip instrument air compressors 2IAS-C1A, C1B, and C1C due to high temperature in precooler or aftercooler.

2) 2CCP-TS89A, 2CCP-TS89B, 2CCP-TS89C

Failure Effect

If these temperature switches fail indicating high compressor (2IAS-C1A, C1B, and C1C) cooling jacket water temperature, then the compressors will inadvertently be stopped.

3) 2CCP-SOV87A, 2CCP-SOV87B, 2CCP-SOV87C

Failure Effect

If the above valves fail close, the cooling water to the station air compressors (2IAS-C1A, C1B, and C1C) will be cut off causing higher temperature to the aftercoolers and tripping of the compressors on high outlet temperature (2IAS-TS2A, TS2B, TS2C).

b. Instrument Air (IAS, 12-1)

1) 2IAS-AOV171, 2IAS-SOV171, 2IAS-PS171

Failure Effect

Failure of the above service air system isolation valve in any position has no adverse effect on the instrument air systems.

2) 2IAS-PS7A, 2IAS-PS7B, 2IAS-PS7C
2IAS-PS33A, 2IAS-PS33B, 2IAS-PS33C
2IAS-PS13A, 2IAS-PS13B, 2IAS-PS13C

Failure Effect

Failure of instrumentation will result in trip of station air compressors 2IAS-C1A, B, and C.

3) 2IAS-PS104, 2IAS-PS223

Failure Effect

Failure of 2IAS-PS104 and 2IAS-PS223 will result in failure of the backup or standby air compressor to start when instrument air header pressure is low.

4) 2IAS-SOV9A, 2IAS-SOV9B, 2IAS-SOV9C

If these compressor unloader valves fail close, the air compressors (2IAS-C1A, C1B, C1C) will work harder and trip out on overload.

3. Combined Effects

a. A break in breathing air high energy line in this zone has no impact on reactor parameters. Control component failure in this zone has no effect on reactor parameters.

Failure of control components in Zone D results in numerous effects (reference Section 3.b.). In this case, however, the high energy line failure is in an air system where pressure is less than 90 psig, and Zone D is a very large zone where the effects of releasing high temperature compressed air from Zone Z will not result in significant effects. In this case, therefore, the break is expected to have no significant effect on the control components located in Zone D.

b. A break in hot water heating high energy line in this zone has no impact or reactor parameters. Control component failure in this zone has no effect on reactor parameters.

Failure of control components in Zone D is highly unlikely due to release of hot water from this break in Zone Z. In the event that failures do occur, however, the following summarizes the effects which might result:

1) Loss of feedwater, an event bounded by FSAR Section 15.2.7 analyses.

2) Feedwater controller failure - maximum demand, an event bounded by FSAR Section 15.1.2 analyses.

3) Partial loss of feedwater heating in fifth and sixth point heaters and second and third point heater drain coolers and in only one of three fourth point heaters, an event bounded by FSAR Section 15.1.1 analyses.

4) Turbine trip, an event bounded by FSAR Section 15.2.3.

5) Loss of main condenser vacuum, bounded by FSAR Section 15.2.5 analyses.

For a detailed discussion of these events, refer to Appendix D, Zone D, Section 3.

c. A break in instrument air high energy line in this zone has no impact on reactor parameters. Control component failure in this zone has no effect on reactor parameters.

Control component failures in Zone D due to failure of the instrument air compressor discharge line in this zone are unlikely; a discussion of the failures which might occur, however, is provided in Section 3.b.

REFERENCE DOCUMENTS
FLOW DIAGRAM LIST

Flow Diagram No.	Title	Rev.
FSK 03-01.0	Main Steam	8
FSK 03-01A	Main Steam	12
FSK 03-01B	Main Steam	10
FSK 03-01C	Main Steam	8
FSK 03-01D	Main Steam	10
FSK 03-01E	Main Steam	11
FSK 03-01F	Main Steam	8
FSK 03-01G	Main Steam	9
FSK 03-01H	Main Steam	8
FSK 03-01J	Main Steam	1
FSK 03-03	Hot Reheat	8
FSK 03-04.0	Extraction Steam	7
FSK 03-04A	Extraction Steam	8
FSK 03-04B	Extraction Steam	7
FSK 03-04C	Extraction Steam	8
FSK 03-04D	Extraction Steam	7
FSK 03-04E	Extraction Steam	7
FSK 03-09.0	Auxiliary Steam	8
FSK 03-09A	Auxiliary Steam	10
FSK 03-09B	Auxiliary Steam	10
FSK 04-01.0	Condensate	8
FSK 04-01A	Condensate	9
FSK 04-01B	Condensate	9
FSK 04-01C	Condensate	10
FSK 04-01D	Condensate	9
FSK 04-01E	Condensate	7
FSK 04-01F	Condensate	8
FSK 04-02.0	LP Feedwater Heater Drains	6
FSK 04-02A	LP Feedwater Heater Drains	7
FSK 04-02B	LP Feedwater Heater Drains	6
FSK 04-02C	LP Feedwater Heater Drains	6
FSK 04-02D	LP Feedwater Heater Drains	6
FSK 04-02E	LP Feedwater Heater Drains	7
FSK 04-02F	LP Feedwater Heater Drains	3
FSK 04-03.0	Condensate Makeup and Drawoff	5
FSK 04-03A	Condnesate Makeup and Drawoff	7
FSK 04-03B	Condensate Makeup and Drawoff	7
FSK 04-03C	Condensate Makeup and Drawoff	6
FSK 04-03D	Condensate Makeup and Drawoff	5
FSK 04-03E	Condensate Makeup and Drawoff	2
FSK 04-03F	Condensate Makeup and Drawoff	2

Flow Diagram No.	Title	Rev.
FSK 04-04.0	Auxiliary Condensate	4
FSK 04-04A	Auxiliary Condensate	7
FSK 04-04B	Auxiliary Condensate	5
FSK 04-04C	Auxiliary Condensate	1
FSK 04-07.0	Condensate Demineralizer	3
FSK 04-07A	Condensate Demineralizer	6
FSK 04-07B	Condensate Demineralizer	4
FSK 04-07C	Condensate Demineralizer	3
FSK 04-07D	Condensate Demineralizer	4
FSK 04-07E	Condensate Demineralizer	6
FSK 04-07F	Condensate Demineralizer	6
FSK 04-07G	Condensate Demineralizer	6
FSK 04-07H	Condensate Demineralizer	4
FSK 04-07J	Condensate Demineralizer	4
FSK 04-07K	Condensate Demineralizer	6
FSK 04-07L	Condensate Demineralizer	3
FSK 04-07M	Condensate Demineralizer	6
FSK 04-07N	Condensate Demineralizer	2
FSK 05-01.0	Condenser Air Removal	5
FSK 05-01A	Condenser Air Removal	7
FSK 05-01B	Condenser Air Removal	6
FSK 06-01.0	Feedwater	7
FSK 06-01A	Feedwater	9
FSK 06-01B	Feedwater	9
FSK 06-01C	Feedwater	6
FSK 06-01D	Feedwater	3
FSK 06-03	Feedwater Pump Recirculation	5
FSK 06-04	Reactor Feed Pump Seal & Leakoff	3
FSK 06-06	HP Feedwater Heater Drains	8
FSK 12-01.0	Instrument Air	6
FSK 12-01A	Instrument Air	10
FSK 12-01B	Instrument Air	10
FSK 12-01C	Instrument Air	10
FSK 12-01D	Instrument Air	7
FSK 12-01E	Instrument Air	11
FSK 12-01F	Instrument Air	9
FSK 12-01G	Instrument Air	10
FSK 12-01H	Instrument Air	10
FSK 12-01J	Instrument Air	7
FSK 12-01K	Instrument Air	7
FSK 12-01L	Instrument Air	8
FSK 12-01M	Instrument Air	8
FSK 12-01N	Instrument Air	5
FSK 12.09.0	Breathing Air	3
FSK 12.09A	Breathing Air	4

Flow Diagram No.	Title	Rev.
FSK 16-01.0	Turb Gen Gland Seal & Exh Steam	4
FSK 16-01A	Turb Gen Gland Seal & Exh Steam	10
FSK 16-01B	Turb Gen Gland Seal & Exh Steam	5
FSK 16-01C	Turb Gen Gland Seal & Exh Steam	4
FSK 16-01D	Turb Gen Gland Seal & Exh Steam	6
FSK 22-16.0	Hot Water Heating	6
FSK 22-16A	Hot Water Heating	6
FSK 22-16B	Hot Water Heating	6
FSK 22-16C	Hot Water Heating	8
FSK 22-16D	Hot Water Heating	6
FSK 22-16E	Hot Water Heating	6
FSK 22-16F	Hot Water Heating	6
FSK 22-16G	Hot Water Heating	3
FSK 22-16H	Hot Water Heating	2
FSK 22-16J	Hot Water Heating	2
FSK 22-16K	Hot Water Heating	2
FSK 22-16L	Hot Water Heating	2
FSK 22-16M	Hot Water Heating	2
FSK 22-17.0	Glycol Heating	4
FSK 22-17A	Glycol Heating	7
FSK 22-17B	Glycol Heating	6
FSK 22-17C	Glycol Heating	7
FSK 22-17D	Glycol Heating	6
FSK 22-17E	Glycol Heating	6
FSK 26-03.0	Reactor Water Cleanup	2
FSK 26-03A	Reactor Water Cleanup	6
FSK 26-03B	Reactor Water Cleanup	6
FSK 26-03C	Reactor Water Cleanup	3
FSK 26-03D	Reactor Water Cleanup	7
FSK 26-03E	Reactor Water Cleanup	7
FSK 26-03F	Reactor Water Cleanup	6
FSK 26-03G	Reactor Water Cleanup	6
FSK 26-03H	Reactor Water Cleanup	7
FSK 26-03J	Reactor Water Cleanup	6
FSK 26-03K	Reactor Water Cleanup	5
FSK 26-03L	Reactor Water Cleanup	5
FSK 26-03M	Reactor Water Cleanup	4
FSK 27-06.0	Reactor Core Isolation Cooling	5
FSK 27-06A	Reactor Core Isolation Cooling	7
FSK 27-06B	Reactor Core Isolation Cooling	7
FSK 27-06C	Reactor Core Isolation Cooling	8
FSK 27-06D	Reactor Core Isolation Cooling	8
FSK 27-06E	Reactor Core Isolation Cooling	7
FSK 27-06F	Reactor Core Isolation Cooling	2
FSK 31-04.0	Off-gas System	4
FSK 31-04A	Off-gas System	6
FSK 31-04B	Off-gas System	5
FSK 31-04C	Off-gas System	6

Flow Diagram No.	Title	Rev.
FSK 31-04D	Off-gas System	4
FSK 31-04E	Off-gas System	5
FSK 31-04F	Off-gas System	4
FSK 32-05.0	Turbine Plant Miscellaneous Drains	2
FSK 32-05A	Turbine Plant Miscellaneous Drains	3
FSK 32-05B	Turbine Plant Miscellaneous Drains	3
FSK 32-05C	Turbine Plant Miscellaneous Drains	3
FSK 32-05D	Turbine Plant Miscellaneous Drains	4
FSK 32-05E	Turbine Plant Miscellaneous Drains	3
FSK 32-05F	Turbine Plant Miscellaneous Drains	4
FSK 32-05G	Turbine Plant Miscellaneous Drains	2
FSK 32-05H	Turbine Plant Miscellaneous Drains	2
FSK 32-06.0	Moisture Separator Rehtr Vents & Drains	8
FSK 32-06A	Moisture Separator Rehtr Vents & Drains	10
FSK 32-06B	Moisture Separator Rehtr Vents & Drains	10
FSK 32-06C	Moisture Separator Rehtr Vents & Drains	4
FSK 32-07.0	Moisture Separator Vents & Drains	6
FSK 32-07A	Moisture Separator Vents & Drains	11
FSK 32-07B	Moisture Separator Vents & Drains	11
FSK 32-14.0	Feedwater Heater Relief Vents & Drains	5
FSK 32-14A	Feedwater Heater Relief Vents & Drains	6
FSK 32-14B	Feedwater Heater Relief Vents & Drains	6
FSK 32-14C	Feedwater Heater Relief Vents & Drains	7
FSK 32-14D	Feedwater Heater Relief Vents & Drains	6
FSK 32-14E	Feedwater Heater Relief Vents & Drains	6
FSK 32-14F	Feedwater Heater Relief Vents & Drains	3

REFERENCE DOCUMENTS
LOGIC DIAGRAM LIST

Logic Diagram No.	Title	Rev.
LSK 1-4A	Turbine Trips	3
LSK 1-4B	Turbine Trips	3
LSK 1-4C	Turbine Trips	3
LSK 1-4D	Turbine Trips	3
LSK 1-4E	Turbine Trips	3
LSK 1-4F	Turbine Trips	3
LSK 1-4G	Turbine Trips	3
LSK 1-7	Turbine Generator Run Back	2
LSK 2-1.1A	Circulating Water	2
LSK 3-1A	Main Steam	6
LSK 3-1B	Main Steam	6
LSK 3-1C	Main Steam	6
LSK 3-1D	Main Steam	6
LSK 3-1E	Main Steam	6
LSK 3-1F	Main Steam	6
LSK 3-1H	Main Steam	6
LSK 3-1M	Main Steam Reheater Control	6
LSK 3-2	Cold Reheat System	2
LSK 3-4A	Extraction Steam	6
LSK 3-4B	Extraction Steam	6
LSK 3-4C	Extraction Steam	6
LSK 3-4D	Extraction Steam	6
LSK 3-4E	Extraction Steam	6
LSK 3-4F	Extraction Steam	6
LSK 3-4G	Extraction Steam	6
LSK 3-9A	Auxiliary Steam	8
LSK 3-9B	Auxiliary Steam	8
LSK 3-9C	Auxiliary Steam	8
LSK 3-9E	Auxiliary Steam	8
LSK 3-9F	Auxiliary Steam	8
LSK 4-1.1G	Condensate Pumps	6
LSK 4-1.3A	Condensate Booster Pumps	6
LSK 4-1.3B	Condensate Booster Pumps	6
LSK 4-1.3C	Condensate Booster Pumps	6
LSK 4-1.3D	Condensate Booster Pumps	6
LSK 4-1.3G	Condensate Booster Pumps	6
LSK 4-1.3J	Condensate Booster Pumps	6
LSK 4-1.3K	Condensate Booster Pumps	6
LSK 4-1.3L	Condensate Booster Pumps	6
LSK 4-1.4	Condensate Recirculation	5

Logic Diagram No.	Title	Rev.
LSK 4-1.6	LP Heater String Isolation	5
LSK 4-2.1A	LP Feedwater Heater Drain	7
LSK 4-2.1B	LP Feedwater Heater Drain	7
LSK 4-2.1C	LP Feedwater Heater Drain	7
LSK 4-2.1D	LP Feedwater Heater Drain	7
LSK 4-2.2	1st and 2nd Points LP Feedwater Ht Drain	7
LSK 4-3E	Condensate Makeup and Drawoff	8
LSK 4-7A	Condensate Demineralizer System	5
LSK 4-7B	Condensate Demineralizer System	5
LSK 4-7C	Condensate Demineralizer System	5
LSK 4-7D	Condensate Demineralizer System	5
LSK 4-7E	Condensate Demineralizer System	5
LSK 4-7F	Condensate Demineralizer System	5
LSK 4-7G	Condensate Demineralizer System	5
LSK 4-7H	Condensate Demineralizer System	5
LSK 4-7J	Condensate Demineralizer System	5
LSK 4-7K	Condensate Demineralizer System	5
LSK 5-1B	Condenser Air Removal	6
LSK 5-1C	Condenser Air Removal	6
LSK 6-1.1A	Motor Driven Feedwater Pump	7
LSK 6-1.1B	Motor Driven Feedwater Pump	7
LSK 6-1.1C	Motor Driven Feedwater Pump	7
LSK 6-1.1D	Motor Driven Feedwater Pump	7
LSK 6-1.1F	Motor Driven Feedwater Pump	7
LSK 6-3	Reactor Feed Pump Recirculation	6
LSK 6-6A	HP Feedwater Heater Drains	6
LSK 6-6B	HP Feedwater Heater Drains	6
LSK 7-3.1A	RF Pump Lube Oil	3
LSK 7-3.1B	RF Pump Lube Oil	3
LSK 9-1A	Reac Bldg Closed Loop Cooling Water	6
LSK 9-1B	Reac Bldg Closed Loop Cooling Water	6
LSK 9-1K	Reac Bldg Closed Loop Cooling Water	6
LSK 9-1L	Reac Bldg Closed Loop Cooling Water	6
LSK 9-1M	Reac Bldg Closed Loop Cooling Water	6
LSK 9-7A	Turbine Bldg Closed Loop Cooling Water	7
LSK 9-7B	Turbine Bldg Closed Loop Cooling Water	7
LSK 9-10M	Service Water	8
LSK 12-1A	Instrument Air System	7
LSK 12-1B	Instrument Air System	7
LSK 12-1C	Instrument Air System	7

Logic Diagram No.	Title	Rev.
LSK 16-1.1A	Turbine Generator Gland Seal Steam	5
LSK 16-1.1B	Turbine Generator Gland Seal Steam	5
LSK 16-1.1C	Turbine Generator Gland Seal Steam	5
LSK 16-2.1	Turb Gen Lube Oil Mot Suction Oil Pmp	7
LSK 16-2.4	Turbine Generator Lift Pumps	7
LSK 16-4A	Turbine Gen-Turning Gear	3
LSK 16-4B	Turbine Gen-Turning Gear	3
LSK 16-4C	Turbine Gen-Turning Gear	3
LSK 16-5.2A	Turbine Generator EHC Fluid System	6
LSK 16-5.2B	Turbine Generator EHC Fluid System	6
LSK 16-6A	Generator Seal Oil	5
LSK 16-6B	Generator Seal Oil	5
LSK 16-6C	Generator Seal Oil	5
LSK 16-7A	Generator Hydrogen and CO2	4
LSK 16-7B	Generator Hydrogen and CO2	4
LSK 16-7C	Generator Hydrogen and CO2	4
LSK 16-7D	Generator Hydrogen and CO2	4
LSK 16-8A	Generator Stator Cooling Water	6
LSK 16-8B	Generator Stator Cooling Water	6
LSK 16-8C	Generator Stator Cooling Water	6
LSK 16-8D	Generator Stator Cooling Water	6
LSK 16-8E	Generator Stator Cooling Water	6
LSK 16-8F	Generator Stator Cooling Water	6
LSK 16-9	Turbine Exhaust Hood Spray	2
LSK 16-10A	Generator Leads Cooling	4
LSK 16-10B	Generator Leads Cooling	4
LSK 22-16A	Hot Water Heating	5
LSK 31-4A	Off-gas System	6
LSK 31-4B	Off-gas System	6
LSK 31-4F	Off-gas System (Radn Mon)	6
LSK 32-5A	Turbine Plant Miscellaneous Drains	5
LSK 32-5B	Turbine Plant Miscellaneous Drains	5
LSK 32-5C	Turbine Plant Miscellaneous Drains	5
LSK 32-5D	Turbine Plant Miscellaneous Drains	5
LSK 32-5E	Turbine Plant Miscellaneous Drains	5
LSK 32-5F	Turbine Plant Miscellaneous Drains	5
LSK 32-5G	Turbine Plant Miscellaneous Drains	5
LSK 32-5.1	Steam Line Drains to Condenser	2
LSK 32-6A	Moisture Separator Reheater Drains	6
LSK 32-6B	Moisture Separator Reheater Drains	6
LSK 32-6C	Moisture Separator Reheater Drains	6

Logic Diagram No.	Title	Rev.
LSK 32-6D	Moisture Separator Reheater Drains	6
LSK 32-6E	Moisture Separator Reheater Drains	6
LSK 32-7A	Moisture Separator Drains	4
LSK 32-7B	Moisture Separator Drains	4
LSK 32-7C	Moisture Separator Drains	4
LSK 32-14	Feedwater Htr Relief, Vents and Drains	3

REFERENCE DOCUMENTS
LOOP DIAGRAM LIST

Loop Diagram No.	Title	Rev.
2ARC-A	Various	2
2ARC-8	Seal Water Suction Flow Low PP1A	2
2ARC-16	Air Ejct Str Bldn VV J1A,B	1
2ARC-17	Air Ejct Str Bldn VV J2A,B	1
2ARC-25	Cond Air Takeoff Valve	1
2ARC-26	Cond Air Takeoff Valve	1
2ARC-104	Air Ejector Isol Valve	1
2ARC-105	Air Rem Pumps Isol Valve	2
2ASS-5	Bldg Htg Temp Cont V	2
2ASS-6	Aux Stm to Air Rem System	4
2ASS-106	Bldg Htg Inter Ht Cont Valve	7
2ASS-107	Cond Air Removal Cont Valve	10
2ASS-112	Clean Stm Rblr Trip Valve	6
2ASS-113	Cln Stm Rblr Cont V	6
2ASS-115	Bldg Htg Ht Exch Inlet	5
2ASS-116	Cln Stm Reblr Stm Press	7
2ASS-122	Cond Air Rem Stm Press	7
2ASS-125	Off-gas Stm Press Cont	7
2ASS-127	Off-gas Stm Press	6
2ASS-138	Aux Blr Stm Block Vlv	4
2ASS-139	Cond Air Remvl Stm Press	5
2ASS-140	Off-gas Preheater Stm V	4
2ASS-143	Bldg Htg Steam Trip V	4
2ASS-144	Aux Steam to Off-gas Drain V	3
2ASS-145	A Blr St Inl V-Cln St Rblr	0
2ASS-146	A Blr Spcv-Cln St Rblr	3
2ASS-147	A Blr St Inl V - St Jet A Ejctr	1
2CCP-A	Various	2
2CCP-25	RBCLCW Pmp P2A Suct Press	0
2CCP-45	Booster Pmp Suction Pressure	0
2CCP-47	Booster Pmp Disch Hdr Press	0
2CCP-51	RBCLCW Fr 2RCS-P1A	3
2CCP-67	RBCLCW Pump P1A Suction	4
2CCP-76	RBCLCW to 2RHS*P1A Clr	3
2CCP-96	Pump Disch Hdr Press L	2
2CCP-102	RBCLCW Exp Tk Lvl H	4
2CCP-105	HVV1 Disch Air Temp	0
2CCP-107	Booster Pmp Disch Hdr Press	0
2CCP-108	RBCLCW Fr E1A, B, C Temp	4
2CCP-110	Expansion Tk1 Level L/L	3
2CCP-115	RBCLCW Rtn Hdr Radn	3
2CCP-120	Expansion Tk1 Lvl L/Norm	4
2CCP-125	P1A, B, C Disch Hdr Press	1
2CCP-126	Heat Exchanger Flow	3
2CCP-128	P2A, B Disch Header Flow	0
2CCP-129	P1A, B, C Disch Flow	2
2CCP-131	RBCLCW Hdr-RWCU Radn	3

Loop Diagram No.	Title	Rev.
2CCP-132	P1A, B, C Suction Cndt	2
2CCP-133	P1A, B, C Suction Ph	2
2CCP-135	RBCLCW Fr Dw Unit Clrs	1
2CCP-180	Expansion Tk2 Level Control	0
2CCS-15	2TMB-E1 Clrs Temp Cont	4
2CCS-17	2CCS Pmp Suct Press	3
2CCS-32	2EXC-E1 Clrs Temp Cont	2
2CCS-43	2TML-E1 Clrs Temp Cont	2
2CCS-102	2CCS Pmps Disch Hdr Press	3
2CCS-104	Heat Exch Disch Temp	5
2CCS-105	Surge & Makeup Tk Lvl Cont	4
2CCS-109	Hydrogen Cold Gas Temp Cont	3
2CCS-136	2CCS Pmps Suct L Fl Alm	5
2CCS-149	2CCS Pmps Disch Hdr Press	3
2CND-A	Dmnrlzr (A thru H) Influent Flow	1
2CND-B	Dmnrlzr (J thru G) Influent Flow	1
2CND-C	Various	1
2CND-D	Various	1
2CND-E	Various	1
2CND-F	Various	1
2CND-G	Various	1
2CND-H	Various	3
2CND-J	Various	1
2CND-K	Various	1
2CND-L	Various	1
2CND-M	Various	1
2CND-N	Various	2
2CND-P	Various	1
2CND-Q	Dmnlzr Influent Flow	0
2CND-R	Dmnlzr Influent Flow	0
2CND-S	Various	0
2CND-T	Various	0
2CND-U	Various	1
2CND-V	Various	1
2CND-266	Chem Waste Sump Level High	5
2CND-271	Neutr Tank TK12 Recirc V	1
2CND-273	Neutr Tank TK12 Disch V	1
2CND-274	Neut Tk Recirc Water Ph	5
2CND-294	Cond Sys Recycle Outlet V	1
2CND-338	Waste TK13 L Cond Disch V	1
2CND-339	Waste TK13 H Cond Disch V	1
2CNM-A	Various	2
2CNM-38	Cnd Bstr Pmp Suction Flow	7
2CNM-39	Cnd Bstr Pmp Suct Press L/L	5
2CNM-42	Cnd Bstr Pmp Suct Press Low	5
2CNM-45	Condenser 2CNM-CND1A Vac	6
2CNM-51	Cnm Sys High Pt Vent V	1
2CNM-52	Cnm Sys High Pt Vent V	1
2CNM-55	Cnm Sys High Pt Vent V	1
2CNM-56	Cnm Sys High Pt Vent V	1
2CNM-57	Cnm Sys High Pt Vent V	1
2CNM-58	Cnm Sys High Pt Vent V	1
2CNM-59	MOV84 Bypass Valve	1

Loop Diagram No.	Title	Rev.
2CNM-60	MOV94 Maintenance Vent	1
2CNM-68	Reac FD Pmp Suct Flow	5
2CNM-70	FD Wtr Pmp Suct Press	6
2CNM-73	FD Wtr Pmp Suct L/L	4
2CNM-74	FD Wtr Pmp Suct Low	4
2CNM-101	Low Press Htr String Bypass	4
2CNM-104	2CND Bstr Pmps Disch Hdr Dr	6
2CNM-105	Cnd Pmps Disch Hdr Press	6
2CNM-109	Condensate Demin Bypass	4
2CNM-114	Cnd Pmp Disch Hdr Flow	7
2CNM-115	Cnd Bstr Pmps Suct Hdr Pr	6
2CNM-119	H Pt Vent FW Pmp Suct Hdr	2
2CNM-137	2FWS-P1A, B, & C Startup Bypass	6
2CNM-138	Str-Up Lvl Cont Vlv Fl	3
2CNO-A	Various	0
2CNO-B	Various	0
2CNS-A	Various	0
2CNS-101	Cond Hotell Level High	4
2CNS-102	Cond Hotwell Level	4
2CNS-103	Cond Hotwell Norm Makeup	6
2CNS-104	Cond Hotwell Emer Makeup	5
2CNS-105	Cond Hotwell Cnds Drawoff	5
2CNS-106	Cond Hotwell Level L/L	4
2CNS-130	Condensate Drawn Off Flow	2
2CNS-131	Normal Condensate Makeup Flow	2
2CNS-304	Cond Hotwell Emer Makeup	1
2CRS-1	Reheater Crs Shell Press	5
2CRS-2	Reheater Crs Shell Press	5
2CRS-3	Reheater Crs Shell Press	5
2CRS-16	Reheater Crs Shell Press	3
2CRS-19	Crs Press at HP Turb Exh	2
2CRS-102	Ld Unbalance Intmd St Press	1
2CRS-103	Reheater Cont Intmd St Press	1
2CWS-51	Cond. Disch Wtr Box Lvl	0
2DSM-70	Mstre Separator RHR Lvl Hi	5
2DSM-75	Mstre Sep Dr Rcvr Lvl Norm	7
2DSM-76	Mstre Sep Dr Rcvr Wtr L	4
2DSM-77	Mstre Sep Dr Rcvr Wtr H/H	4
2DSM-78	Mstre Sep Rcvr Lvl H	8
2DSR-65	2DSR-TK Dr Rcvr Lvl Norm	8
2DSR-65	2DSR-TK Dr Rcvr Lvl Norm	8
2DSR-66	2DSR-TK 6 Dr Rcvr Lvl L	4
2DSR-67	2DSR-TK 6 Dr Rcvr Extm H Lvl	4
2DSR-68	2DSR-TK 6 Dr Rcvr Lvl H	10
2DSR-78	Scav St Line Press	2
2DSR-81	Scav St Fdw Htr Inlet V	3
2DSR-82	Scav St Cond Isol V	3
2DSR-83	Scav St Isol V	3
2DSR-84	Scav St Hdr Warmup V	1
2DSR-103	Scav St Hdr Press	2
2DTM-2	5th Point Extraction Drains	1
2DTM-3	2ESS-MOV Upstream Drain	1
2DTM-4	Aux Stm System Dr	0

Loop Diagram No.	Title	Rev.
2DTM-5	2ESS-MOV Upstream Drain	1
2DTM-6	Aux Stm to Off-Gas System	0
2DTM-7	Aux Stm to Bldg Htg Drains	0
2DTM-8	6th Pt Extraction Drain	1
2DTM-30	Air Ejector Steam Line Dr	1
2DTM-31	Air Ejector Steam Line Dr	1
2DTM-101	Aux Steam Header Drain	1
2DTM-102	T-Gen Gland Seal & Exh St Dr	0
2DTM-104	6th Pt Extraction Hdr Dr	1
2DTM-105	5th Pt Extraction Hdr Dr	1
2DTM-106	2ESS-NRV109 Aft Seat Dr	1
2DTM-107	Aux Stm Low Pt Drain	0
2DTM-108	Aux Stm to Off-Gas System	0
2DTM-119	2ESS-NRV114 Aft Seat Dr	1
2DTM-126	Aux Stm Low Pt Drains	1
2DTM-127	Aux Stm Low Pt Drains	1
2DTM-128	Aux St to Bldg Htg Drains	1
2DTM-142	Aux St to Air Ejctr Drains	1
2DTM-143	Steam Seal Header Low Pt Dr	1
2DTM-144	Aux Stm to Clean St Reblr	1
2DTM-156	Aux Sealing Stm Low Pt Dr	1
2DTM-157	Extraction Hdr Dr Valve	1
2ESS-1	6th Pt Htr Extr St Press	6
2ESS-4	Turb 4th Stg Extr St Press	2
2ESS-7	1st Pt Htr Shell Press	6
2ESS-12	2nd Pt Htr Shell Press	7
2ESS-16	3rd Pt Htr Extr St Nrv	6
2ESS-17	3rd Pt Htr Extr St Press	6
2ESS-23	4th Pt Htr Extr St Nrv	6
2ESS-25	4th Pt Htr Extr St Press	6
2ESS-31	5th Pt Htr Extr St Press	6
2ESS-34	6th Pt Htr Extr St Nrv	6
2ESS-46	6th Pt Htr Warming Valve	2
2ESS-47	5th Pt Htr Warming Valve	2
2ESS-48	4th Pt Htr Warming Valve	2
2ESS-49	3rd Pt Htr Warming Valve	2
2ESS-103	Extr St to Hvh Ht Exch	6
2ESS-104	Cl St Reblr Extr Stm Isol	2
2ESS-105	Ht Exch Extr St Isol	5
2ESS-109	Extr St to Hvh Ht Exch	5
2ESS-110	5th Pt Htr Extr St Press L	2
2ESS-112	4th Pt Htr Extr St Press L	1
2ESS-113	Extr St to Tme Ht Exch	3
2ESS-114	Extr St to Time Ht Exch	3
2ESS-115	5th Pt Htr Extr St Press H	1
2ESS-116	4th Pt Htr Extr St Press H	1
2FWL-1	2FWS-P1A Brg Oil	0
2FWL-2	2FWS-P1A Mn Lubo Pump Disch	0
2FWL-19	2FWS-P1A Mn Lubo Disch	0
2FWR-2	Reac Feed Pmp Recirc V	7
2FWS-A	Various	0
2FWS-1	Mn Feed Hdr Fl to Reac	5
2FWS-9	2FWS-P1A Pmp Disch Press	7

Loop Diagram No.	Title	Rev.
2FWS-23	Feed Wtr Test Chk V	3
2FWS-40	FWS Press to Reactor	6
2FWS-42	FDW Disch Pmp Hpt V	2
2FWS-43	6th Pt Htr Outlet PP Hpt V	2
2FWS-55	High Press Low Flow Cont V	3
2FWS-105	Reactor Inlet Hdr Hpt V	2
2FWS-109	FW CCU Flow	2
2FWS-111	High Energy FWCCU Control	3
2FWS-112	Low Energy FWCCU Shutoff	1
2FWS-113	Low Energy FWCCU Control	2
2GMC-A	Various	3
2GMC-6	Coolant Pmp 1A Running	2
2GMH-A	Various	2
2GMH-B	Various	3
2GMH-117	Machine Gas Pressure	3
2GMH-119	H2 Supply Isolation	1
2GMH-162	Emer Hydrogen Pump	2
2GMH-163	Gen Lead PH-1 H2 Conc	2
2GMH-164	Gen Lead PH-2 H2 Conc	2
2GMH-165	Gen Lead PH-3 H2 Conc	2
2GMH-166	Inside Gen Lag S H2 Conc	2
2GMH-167	Inside Gen Lag N H2 Conc	2
2GMH-168	Aux Oil Detng Tk V H2 Conc	2
2GMH-169	Sttr Clg Wtr Tk V H2 Conc	2
2GMH-170	H2 & Clg Wtr Cab H2 Conc	2
2GMH-171	2GMH-E1A & E1B H2 Conc	2
2GMH-172	2GMH-E1C & E1D H2 Conc	2
2GMH-174	Machine Gas Pressure	0
2GML-1	Gen Leads Clrs Air Flow L	2
2GMO-A	Various	1
2GMO-102	P1 Pump Disch Press L	2
2GMO-103	Hydr Seal Oil Brg & Press	5
2GMO-104	Hydraul Seal Brg 10 Press	4
2GSN-137	Nitrogen Recr TK2 Press	0
2HDH-6	2FWS-E6A Norm Drain	6
2HDH-7	2FWS-E6A Htr Level H/H	5
2HDH-8	2FWS-E6A Htr Level Low	5
2HDH-26	2FWS-E6A Htr Emerg Dr	8
2HDH-29	Norm Drain Line Drain Valve	0
2HDL-2	2HDL-Tk Drain Receiver	4
2HDL-3	2CNM-E3 Norm Drain	4
2HDL-4	4th Pt Htr Water Level	6
2HDL-5	2CNM-E5A Norm Drain	4
2HDL-7	2CNM-E1A Lvl Hi	4
2HDL-8	2CNM-E2A Lvl Hi	5
2HDL-9	2CNM-E3A Htr Level H/H	4
2HDL-10	2CNM-E4A Htr Level H/H	4
2HDL-11	2CNM-E5A Htr Level H/H	4
2HDL-12	TK-2A Dr Rcvr Level L	4
2HDL-13	2CNM-E3A Htr Level L	4
2HDL-14	2CNM-E4A Htr Level L	4
2HDL-22	2HDL-TK2A Emer Drain	5
2HDL-23	2CNM-E3A Emer Drain	5

Loop Diagram No.	Title	Rev.
2HDL-24	2CNM-E4A Emer Drain	5
2HDL-25	2CNM-E5A Emer Drain	5
2HDL-33	2CNM-E5A Htr Level L	4
2HDL-35	Heater Dr Pump Recirc	7
2HDL-41	Dr Pump Disch Press	6
2HDL-50	2HDL-P1A Suct Press Low	5
2HRS-7	2TMS-LP Turb Inl Fr 2MSS-E1A	4
2HRS-8	2TMS Hrs From 2MSS-E1A	5
2HRS-9	2TMS Hrs From 2MSS-E1B	5
2HRS-107	MSR Cross Around Pressure	0
2HRS-108	MSR Cross Around Pressure	0
2IAS-A	Various	1
2IAS-2	Compressor Precooler Temperature High	5
2IAS-4	Compressor After Cooler Temperature High	5
2IAS-7	Comp A Rcvr Tank Press L	3
2IAS-13	Compressor Lube Oil Press Low	3
2IAS-33	Comp A Rcvr Tank Press H	2
2IAS-104	Comp A Hdr Press L	5
2IAS-110	Prefltr Diff Press H	6
2IAS-111	AFT Fltr Diff Press H	6
2IAS-171	Comp A Hdr Press LL	2
2IAS-178	ADS Cprsr Rcvr TK*4 Pressure High	3
2IAS-180	Comp A Rcvr*TK4 Press H	1
2IAS-183	ADS Cprsr Rcvr TK*5 Pressure High	3
2IAS-185	Comp A Rcvr*TK5 Press H	1
2IAS-194	Comp A Rcvr TK3 Press L	2
2IAS-223	Inst & Svce Air Header Pressure Low	1
2MSS-C	Various	2
2MSS-22	MS/R Regulated Steam Press	8
2MSS-23	RHR Reheating Steam Flow	5
2MSS-28	2MSS-E1A Inl High Load Vlv	1
2MSS-29	2MSS-E1A Inl Low Load Vlv	1
2MSS-52	Rhr Steam Supply Press	2
2MSS-85	Steam Line A Drain Valve	1
2MSS-87	Low Point Mn Stm Line Drain	1
2MSS-88	Mn St Combined Hdrdr Vlv	0
2MSS-92	Main Steam to Reheater	2
2MSS-101	2TMS-T1 Mn St Inl Hdr Press	7
2MSS-103	2TMS-T1 1st Stage Pressure	5
2MSS-191	Mn St Combined Hdr Dr Vlv	0
2MSS-194	Turb Byp Chest Dr Vlv	0
2MSS-201	Rhr St Line A Hdr Dr Vlv	0
2MSS-203	Mn St Combined Hdr Dr Vlv	0
2MSS-205	Turb Byp Chest Dr Vlv	0
2MSS-209	Mn St Turb Lead Dr Vlv	0
2OFG-A	Various	2
2OFG-B	Various	2
2OFG-C	Various	2
2OFG-D	Various	3
2OFG-F	Various	3
2OFG-J	Various	4
2OFG-K	Various	2
2OFG-L	Various	1

Loop Diagram No.	Title	Rev.
2OFG-3	Mn Cond Air Inleakage Flow	2
2OFG-9	Preheater Strainer Blowdown	0
2OFG-13	Off-gas Pre-trtmt Hdr Radn	3
2OFG-107	Off-gas System Inlet Press	2
2OFG-120	Out L Flow to Stack	2
2OFG-122	Off-gas Control Panel	3
2RCS*A	Various	0
2RCS*G	Various	2
2RCS-B	Various	1
2RDS-A	Various	2
2RDS-B	Various	2
2RDS-C	Various	2
2RHS*LS	Level Switch	1
2RHS-LS	Level Switch	2
2RHS-PT	Pressure Temp	0
2SVH-1	1st Pt Htr Shell Vent	3
2SVH-2	2nd Pt Htr Shell Vent	3
2SVH-14	1st Pt Htr Channel Drain	2
2SVH-24	2nd Pt Htr Channel Drain	2
2SVH-26	6th Pt Htr Channel Drain	2
2SVH-27	6th Pt Htr Shell Vent	2
2SVH-31	4th Pt Htr Shell Vent	2
2SVH-32	4th Pt Htr Channel Drain	2
2SVH-36	5th Pt Htr Shell Vent	2
2SVH-37	5th Pt Htr Drain	2
2SVH-44	3rd Pt Htr Shell Vent	2
2SVH-45	3rd Pt Htr Channel Drain	2
2SVH-52	3rd Pt Dr Clr Shell Vent	2
2SVH-58	2nd Pt Dr Clr Shell Vent	2
2SWP-98	Svc Wtr Fr Clr 2ARC-E1A	1
2SWP-143	SWP Loop A Disch Ph	1
2SWP-144	SWP Loop A Disch Cndt	1
2SWP-568	FR Clg Coil 1HVR-CLC2	1
2SWP-569	FR Clg Coil 2HVR-CLC2	1
2TMA-A	Various	0
2TMA-3	Turbine Exhaust Hood Temp H	0
2TMB-A	Various	1
2TMB-B	Various	1
2TMB-1	EHC Fluid Cooler Temp	2
2TMB-101	Hydraulic Fluid Temp H/L	1
2TMB-110	EHC Fluid Pump Start	1
2TMB-111	EHC Fluid Pump Start	1
2TMB-116	EHC Heater Unit Control	2
2TMB-130	Extraction Air Relay	2
2TME-A	Various	3
2TME-HV	Hand Valve	2
2TME-12	2TME Reblr Shell Lvl L	6
2TME-13	2TME Reblr Shell Lvl H	6
2TME-14	2TME Reblr Shell H/H	4
2TME-15	2TME Reblr Disch Press	6
2TME-AOV	Air Operated Valve	3
2TME-103	E1A & B Disc Hdr Press	6

Loop Diagram No.	Title	Rev.
2TME-104	Steam Seal Cont Pnl	1
2TME-107	E1A & B Stm Seal Red Press	7
2TME-111	Steam Seal Press Red	6
2TME-113	2TME-E1A & B Out Hdr Press L	4
2TME-122	Gland Seal Emer Supply Pressure	2
2TME-130	Seal Drain Tank TK1 Level	3
2TML-A	Various	1
2TML-B	Various	3
2TML-1	Turbine Speed Low	2
2TML-14	Lift Pmp Suct Press L	2
2TML-15	Lift Pmp Suct Press L	3
2TML-101	Turbine Bearing Oil Header Press Low	2
2TML-102	Main Shaft Oil Pump Suction Press Low	1
2TML-103	Main Shaft Oil Pump Discharge Press Low	1
2TML-104	Turb Bearing Oil Header Press Low	1
2TML-106	Main Shaft Oil Pump Discharge Press Low	1
2TML-107	Turning Gear Oil Pump Disch Press Low	1
2TMS-151	Exhaust Hood Spray Press	1
2TMS-A	Various	1

REFERENCE DOCUMENTS
PIPING DIAGRAM LIST

Piping Diagram No.	Title	Sht No.	Rev.
12177-EP2D	Main Steam Piping Turbine Area	4	9
12177-EP2F	Main Steam to Moisture Separator and Reheater Turbine Area	6	7
12177-EP2G	Main Steam to Moisture Separator and Reheater Turbine Area	7	6
12177-EP-6A	3rd Point Extraction Steam Piping - LP	1	7
12177-EP-6C	3rd Point Extraction Steam Piping - LP	3	6
12177-EP-7A	4th Point Extraction Steam Piping - LP	1	6
12177-EP-7B	4th Point Extraction Steam Piping - LP	2	4
12177-EP-7C	4th Point Extraction Steam Piping - LP	3	5
12177-EP-8A	5th Point Extraction Steam Piping - LP	1	8
12177-EP-9A	6th Point Extraction Steam Piping - HP	1	9
12177-EP-9B	6th Point Extraction Steam Piping - HP	2	7
12177-EP-9C	6th Point Extraction Steam Piping - HP	3	6
12177-EP-12A	Turbine Bypass Steam Piping - Main Steam	1	5
12177-EP-13A	RHS Heat Exchange Steam PP Reactor Bldg	1	12
12177-EP-13B	RHS Heat Exchange Steam PP Reactor Bldg	2	12
12177-EP-15A	Aux Steam Piping Turbine Bldg	1	7
12177-EP-15B	Aux Steam Piping Turbine Bldg	2	8
12177-EP-15C	Aux Steam Piping Turbine Bldg	3	6
12177-EP-15D	Aux Steam Piping Section - Turbine Bldg	4	7
12177-EP-15E	Aux Steam Piping Section - Turbine Bldg	5	7
12177-EP-16A	Aux Condensate PP Turbine Bldg	1	6
12177-EP-16B	Aux Condensate PP Turbine Bldg	2	5
12177-EP-16C	Aux Condensate PP Plan Turbine Bldg	3	5
12177-EP-16D	Aux Condensate PP Section Turbine Bldg	4	5
12177-EP-17A	Feedwater Piping Turbine Bldg	1	9
12177-EP-17B	Feedwater Piping Turbine Bldg	2	7
12177-EP-17F	Feedwater Piping Turbine Bldg	6	8
12177-EP-18A	Condensate Piping Turbine Bldg	1	11
12177-EP-18B	Condensate Piping Turbine Bldg	2	10
12177-EP-18C	Condensate Piping Heater Bays	3	9
12177-EP-18D	Condensate Piping Heater Bays	4	9
12177-EP-18E	Condensate Piping Turbine Bldg	5	8
12177-EP-18F	Condensate Piping Turbine Bldg	6	8
12177-EP-18G	Condensate Piping Turbine Bldg	7	9
12177-EP-18J	Condensate Piping Turbine Bldg	9	6

Piping Diagram No.	Title	Sht No.	Rev.
12177-EP-23A	Moisture Separator & Reheater Drain PP	1	7
12177-EP-23B	Moisture Separator & Reheater Drain PP	2	6
12177-EP-23C	Moisture Separator & Reheater Drain PP	3	6
12177-EP-23D	Moisture Separator & Reheater Drain PP	4	6
12177-EP-23E	Moisture Separator & Reheater Drain PP	5	5
12177-EP-23G	Moisture Separator & Reheater Drain PP	7	7
12177-EP-23H	Moisture Separator & Reheater Drain PP	8	7
12177-EP-23J	Moisture Separator & Reheater Drain PP	9	4
12177-EP-23K	Moisture Separator & Reheater Drain PP	10	3
12177-EP-25A	High Pressure Feedwater Heater Drain Piping	1	3
12177-EP-26A	Low Pressure Feedwater Heater Drain Piping	1	5
12177-EP-26B	Low Pressure Feedwater Heater Drain Piping	2	7
12177-EP-26C	Low Pressure Feedwater Heater Drain Piping	3	8
12177-EP-26D	Low Pressure Feedwater Heater Drain Piping	4	7
12177-EP-27A	Feedwater Heater Vent & Drain Piping	1	5
12177-EP-27B	Feedwater Heater Vent & Drain Piping	2	6
12177-EP-27C	Feedwater Heater Vent & Drain Piping	3	5
12177-EP-27E	Feedwater Heater Vent Relief & Drain Piping	5	5
12177-EP-31A	Misc Drain Piping Turbine Bldg	1	5
12177-EP-31B	Misc Drain Piping Turbine Bldg	2	4
12177-EP-31C	Misc Drain Piping Turbine Bldg	3	6
12177-EP-31D	Misc Drain Piping Turbine Bldg	4	5
12177-EP-31E	Misc Drain Piping Turbine Bldg	5	4
12177-EP-31F	Misc Drain Piping Turbine Bldg	6	3
12177-EP-31G	Misc Drain Piping Turbine Bldg	7	2
12177-EP-31H	Misc Drain Piping Turbine Bldg	8	2
12177-EP-31J	Misc Drain Piping Turbine Bldg	9	3
12177-EP-33A	Air Removal Piping Turbine Bldg	1	6
12177-EP-33C	Air Removal Piping Turbine Bldg	3	4
12177-EP-36A	Turbine Gland Steam & Leak-off Piping	1	7
12177-EP-36B	Turbine Gland Steam & Leak-off Piping	2	7
12177-EP-36C	Turbine Gland Steam & Leak-off Piping	3	8
12177-EP-36E	Turbine Gland Steam & Leak-off Piping	5	6
12177-EP-40C	Compressed Air Piping Intake Air and Equipment	3	7
12177-EP-40Y	Compressed Air Piping Sec & Dtls Turbine Bldg	12	7
12177-EP-46A	Condensate Dmnrlzr PP Turbine Bldg	1	7
12177-EP-46B	Condensate Dmnrlzr PP Turbine Bldg	2	5

Piping Diagram No.	Title	Sht No.	Rev.
12177-EP-57A	Fdwtr Pump Recirc PP Turb Bldg Plan	1	3
12177-EP-58A	Misc S.V. Disch & Vent Piping Turb Bldg	1	6
12177-EP-58C	Misc S.V. Disch & Vent Piping Turb Bldg	3	6
12177-EP-65A	Fdwtr Pump Injection Seal Water Piping	1	1
12177-EP-69A	Off-gas Recombiner Piping	1	5
12177-EP-69B	Off-gas Recombiner Piping	2	5
12177-EP-69C	Off-gas Recombiner Piping	3	5
12177-EP-69D	Off-gas Recombiner Piping	4	3
12177-EP-71B	Residual Heat Removal Pump Reactor Bldg	2	11
12177-EP-72N	Closed Loop Cooling and Sealing Water Piping - Reactor Building	13	7
12177-EP-76C	Reactor Core Isolation Cooling Piping Reactor Building	3	11
12177-EP-78B	High Pressure Core Spray Piping Reactor Building	2	15
12177-EP-108B	Tunnel Piping	2	17
12177-EP-108D	Tunnel Piping	4	14
12177-EP-108H	Tunnel Piping	8	10
12177-EP-108J	Tunnel Piping	9	11
12177-EP-108K	Tunnel Piping	10	10
12177-EP-109H	Cond Make-up & Draw-off PP Plan Turbine Bldg	8	8
12177-EP-139A	Main Steam Drain Piping Reactor Bldg	1	5
12177-EP-139B	Main Steam Drain Piping Reactor Bldg	2	5
12177-EP-139C	Main Steam Drain Piping Reactor Bldg	3	5
12177-EP-139D	Main Steam Drain Piping Reactor Bldg	4	5

REFERENCE DOCUMENTS
PIPING DRAWING LIST

Ventilation Drawing No.	Title	Sht No.	Rev.
12177-EB-27A	Heating & Cooling Water PP Turbine Bldg El 250 Ft	1	9
12177-EB-27C	Heating & Cooling Water PP Turbine Bldg El 250 Ft	3	7
12177-EB-27F	Htg & Clg Wtr PPG Turb Bldg El 250 Ft - 0 In. & MS Tnl	6	7
12177-EB-27J	Heating & Cooling Water PP Turbine Building El 250 Ft	9	9
12177-EB-27K	Heating & Cooling Water PP Turbine Building El 227 Ft - 6 In.	10	7
12177-EB-27N	Heating & Cooling Water PP Turbine Building El 277 Ft - 6 In.	13	7
12177-EB-27R	Heating & Cooling Water PP Turbine Building El 277 Ft - 6 In.	16	6
12177-EB-27S	Heating & Cooling Water PP Turbine Building El 277 Ft - 6 In.	17	6
12177-EB-27T	Heating & Cooling Water PP Turbine Building El 277 Ft - 6 In.	18	5
12177-EB-27V	Heating & Cooling Water PP Turbine Building El 306 Ft	20	8
12177-EB-27AC	Heating & Cooling Water PP Turbine Building El 250 Ft	27	6
12177-EB-27AE	Heating & Cooling Water PP Turbine Building El 288 Ft - 6 In.	29	7
12177-EB-27AK	Heating & Cooling Water PP Turbine Building - Sections	34	2
12177-EB-70V	Htg & Clg Wtr PPG Elec Tnl & Aux Serv Bldg South	20	4
12177-EB-131A	Bldg Services Chiller Rm Bldg Piping Plan El 261 Ft - 0 In.	1	2

INSTRUMENT DRAWING LIST

Instrument Diagram No.	Title	Sht No.	Rev.
12177-EK-3A	Instr PP - Turbine Bldg Plan El 250 Ft - 0 In.	1	5
12177-EK-3B	Instr PP - Turbine Bldg Plan El 250 Ft - 0 In.	2	3
12177-EK-3C	Instr PP - Turbine Bldg Plan El 250 Ft - 0 In.	3	5
12177-EK-3D	Instr PP - Turbine Bldg Plan El 250 Ft - 0 In.	4	5
12177-EK-3E	Instr PP - Turbine Bldg Plan El 277 Ft - 6 In.	1	3
12177-EK-3F	Instr PP - Turbine Bldg Plan El 277 Ft - 6 In.	2	4
12177-EK-3G	Instr PP - Turbine Bldg Plan El 277 Ft - 6 In.	3	4
12177-EK-3H	Instr PP - Turbine Bldg Plan El 277 Ft - 6 In.	4	4
12177-EK-3J	Instr PP - Turbine Bldg Miscellaneous		5
12177-EK-4A	Instr Air Supply PP - Turb Bldg - Plan El 250 Ft - 0 In.	1	4
12177-EK-4B	Instr Air Supply PP - Turb Bldg - Plan El 250 Ft - 0 In.	2	4
12177-EK-4C	Instr Air Supply PP - Turb Bldg - Plan El 250 Ft - 0 In.	3	3
12177-EK-4D	Instr Air Supply PP - Turb Bldg - Plan El 250 Ft - 0 In.	4	5
12177-EK-4E	Instr Air Supply PP - Turb Bldg - Plan El 277 Ft - 6 In.	1	3
12177-EK-4F	Instr Air Supply PP - Turb Bldg - Plan El 277 Ft - 6 In.	2	3
12177-EK-4G	Instr Air Supply PP - Turb Bldg - Plan El 277 Ft - 6 In.	3	4
12177-EK-4H	Instr Air Supply PP - Turb Bldg - Plan El 277 Ft - 6 In.	4	3
12177-EK-4J	Instr Air Supply PP - Turb Bldg Misc		4
12177-EK-6A	Instr Piping Level Control & Switches	1	3
12177-EK-6B	Instr Piping Level Control & Switches	2	4
12177-EK-6C	Instr Piping Level Control & Switches	3	5
12177-EK-6D	Instr Piping Level Control & Switches	4	4
12177-EK-6E	Instr Piping Level Control & Switches	5	4
12177-EK-6F	Instr Piping Level Control & Switches	6	3
12177-EK-6G	Instr Piping Level Control & Switches	7	5
12177-EK-6K	Instr Piping Level Control & Switches	8	3
12177-EK-6L	Instr Piping Level Control & Switches	9	2
12177-EK-6M	Instr Piping Level Control & Switches	10	3
12177-EK-6N	Instr Piping Level Control & Switches	11	2

Instrument Diagram No.	Title	Sht No.	Rev.
12177-EK-7A	Instr Piping Water Treating	1	4
12177-EK-8A	Instr Piping Turbine Bldg El 277 Ft 6 In.	1	4
12177-EK-8J	Instr Piping, Standby Gas Bldg El 286 Ft		1
12177-EK-9C	Instr PP Radwaste Bldg Plan El 279 Ft	3	4
12177-EK-9D	Instr PP Radwaste Bldg Plan El 291 Ft 6 In.	4	3
12177-EK-9K	Instr PP Radwaste Bldg Plan El 291 Ft 6 In.		2
12177-EK-13A	Instr PP Cond Demin Plan El 250 Ft 0 In.	1	3
12177-EK-13B	Instr PP Cond Demin Plan El 277 Ft 6 In.	2	3
12177-EK-13C	Instr PP Cond Demin Miscellaneous		3
12177-EK-15D	Instr PP Radiation Monitoring	4	3
12177-EK-15G	Instr PP Radiation Monitoring - Main Stack	-	1
12177-EK-18A	Instr PP - Htr Bays Plan El 250 Ft 0 In.		3
12177-EK-18B	Instr PP - Htr Bays Plan El 277 Ft 6 In.		4
12177-EK-18C	Instr PP - Htr Bays Plan El 306 Ft 0 In.		6
12177-EK-19B	Instr PP - Screenwell	2	4
12177-EK-39A	Hydrogen Monitoring Turbine Gen		2
12177-EK-40A	Instr PP Off-gas TRT Area	1	3
12177-EK-40B	Instr PP Off-gas TRT Area	2	4
12177-EK-401A	Instr Piping Plan - Reac Bldg El 175 Ft 0 In.	1	3
12177-EK-401B	Instr Piping Plan - Reac Bldg El 175 Ft 0 In.	2	4
12177-EK-401E	Instr Piping Plan - Reac Bldg El 175 Ft 0 In.	5	5
12177-EK-401F	Instr Piping Plan - Reac Bldg El 175 Ft 0 In.	6	3
12177-EK-401G	Instr Piping Plan - Reac Bldg El 215 Ft 0 In.	1	3
12177-EK-401H	Instr Piping Plan - Reac Bldg El 215 Ft 0 In.	2	4
12177-EK-401J	Instr Piping Plan - Reac Bldg El 215 Ft 0 In.	3	4
12177-EK-401L	Instr Piping Plan - Reac Bldg El 215 Ft 0 In.	5	2
12177-EK-401M	Instr Piping Plan - Reac Bldg El 215 Ft 0 In.	6	2
12177-EK-401N	Instr Piping Plan - Reac Bldg El 240 Ft 0 In.	1	2
12177-EK-401R	Instr Piping Plan - Reac Bldg El 240 Ft 0 In.	4	2
12177-EK-401S	Instr Piping Plan - Reac Bldg El 240 Ft 0 In.	5	3

Instrument Diagram No.	Title	Sht No.	Rev.
12177-EK-401T	Instr Piping Plan - Reac Bldg El 240 Ft 0 In.	5	3
12177-EK-401U	Instr Piping Plan - Reac Bldg El 261 Ft 0 In.	1	3
12177-EK-401V	Instr Piping Plan - Reac Bldg El 261 Ft 0 In.	2	2
12177-EK-401X	Instr Piping Plan - Reac Bldg El 261 Ft 0 In.	4	1
12177-EK-401Y	Instr Piping Plan - Reac Bldg El 261 Ft 0 In.	5	2
12177-EK-401AA	Instr Piping Plan - Reac Bldg El 289 Ft 0 In.	1	1
12177-EK-401AD	Instr Piping Plan - Reac Bldg El 289 Ft 0 In.	4	2
12177-EK-401AE	Instr Piping Plan - Reac Bldg El 289 Ft 0 In.	5	1
12177-EK-401AF	Instr Piping Plan - Reac Bldg El 289 Ft 0 In.	6	2
12177-EK-401AK	Instr Piping Plan - Reac Bldg El 306 Ft 6 In.	4	1
12177-EK-401AL	Instr Piping Plan - Reac Bldg El 306 Ft 6 In.	5	1
12177-EK-401AM	Instr Piping Plan - Reac Bldg El 328 Ft 10 In.	1	1
12177-EK-401AS	Instr Piping Plan - Reac Bldg El 328 Ft 10 In.	4	1
12177-EK-401AW	Instr Piping Plan - North A/B El 175 Ft 0 In.	1	7
12177-EK-401AX	Instr Piping Plan - North A/B El 175 Ft 0 In.	2	10
12177-EK-401AY	Cnstr Piping Plan - South A/B El 175 Ft 0 In.	1	6
12177-EK-401CA	Instr PPG, Reactor Bldg Plan, El 353 Ft 10 In.		1
12177-EK-403D	Instrument Piping Tunnels		2
12177-EK-406E	Instr PPG, Level Controls & Switches, Sheet 5		1
12177-EK-408A	Instr PPG, Turbine Building	1	3

FIGURE 1

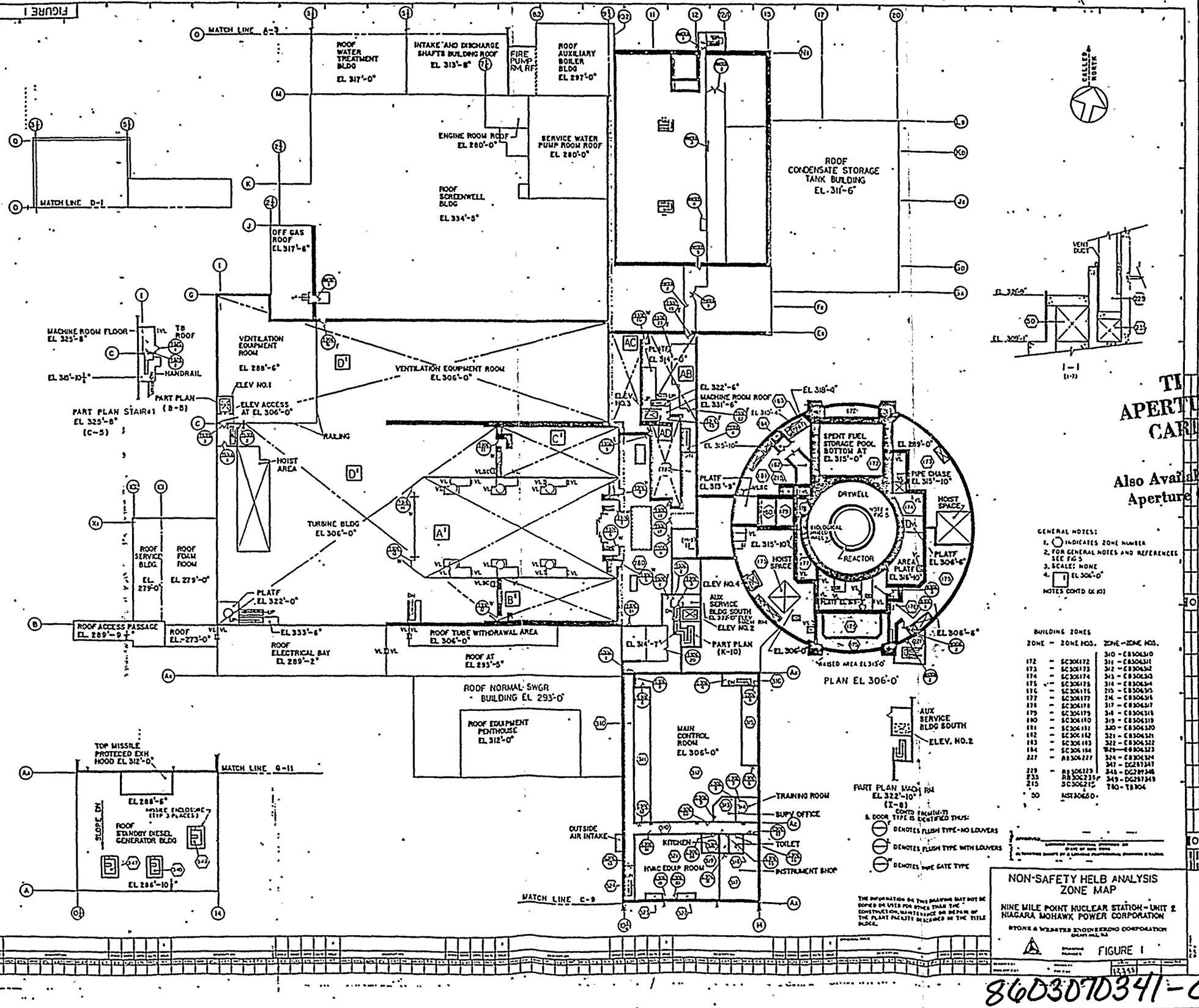

TI APERTURE CARD
Also Available On Aperture Card

8603070341-01

[illegible]
[illegible]

[illegible]
[illegible]
[illegible]

FIGURE 2

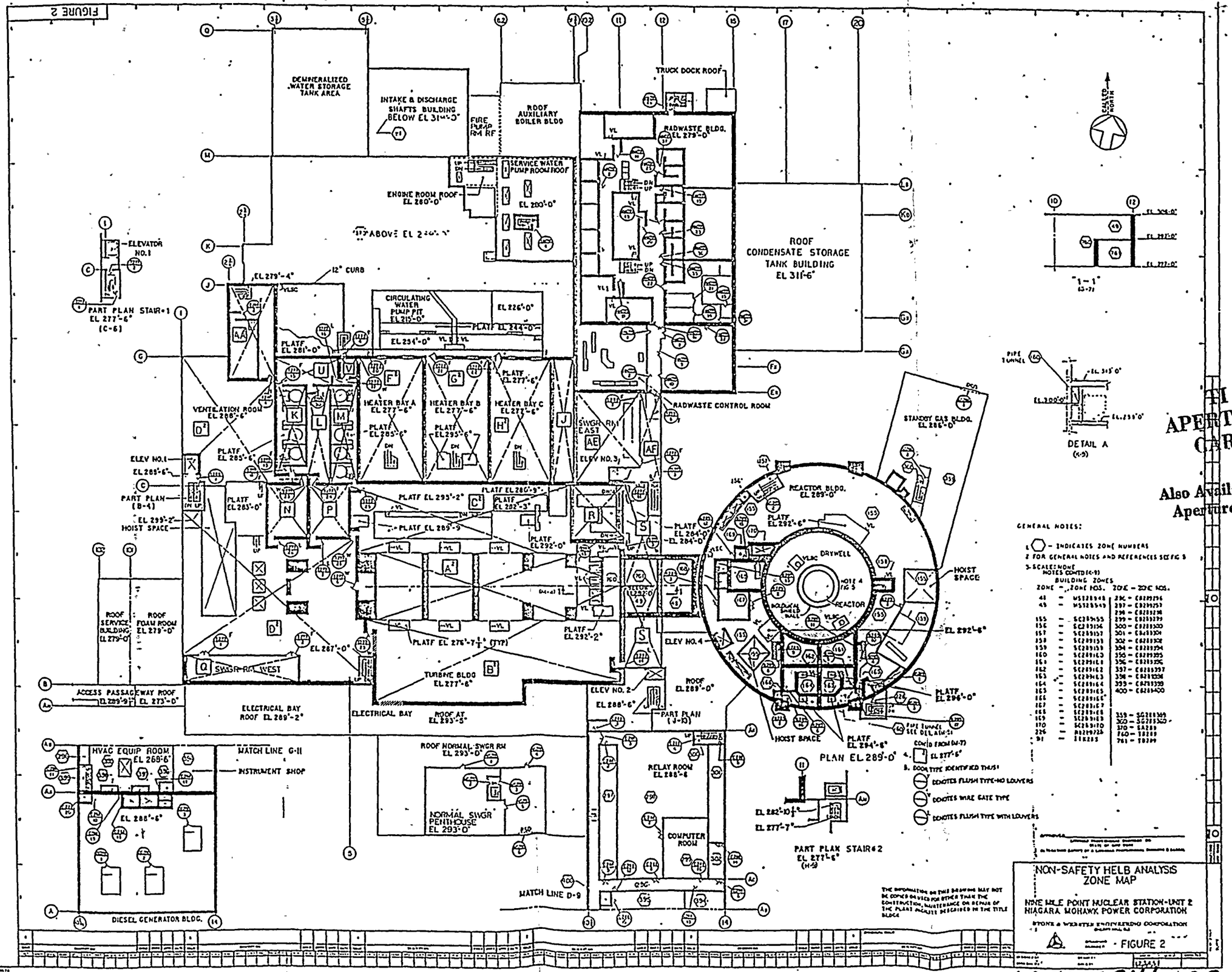

THE INFORMATION ON THIS DRAWING MAY NOT BE COPIED OR USED FOR OTHER THAN THE CONSTRUCTION, MAINTENANCE OR REPAIR OF THE PLANT FACILITY DESCRIBED IN THE TITLE BLOCK

APERTURE CARD
Also Available On Aperture Card

8603070341-02

Also Available On
Aperture Card

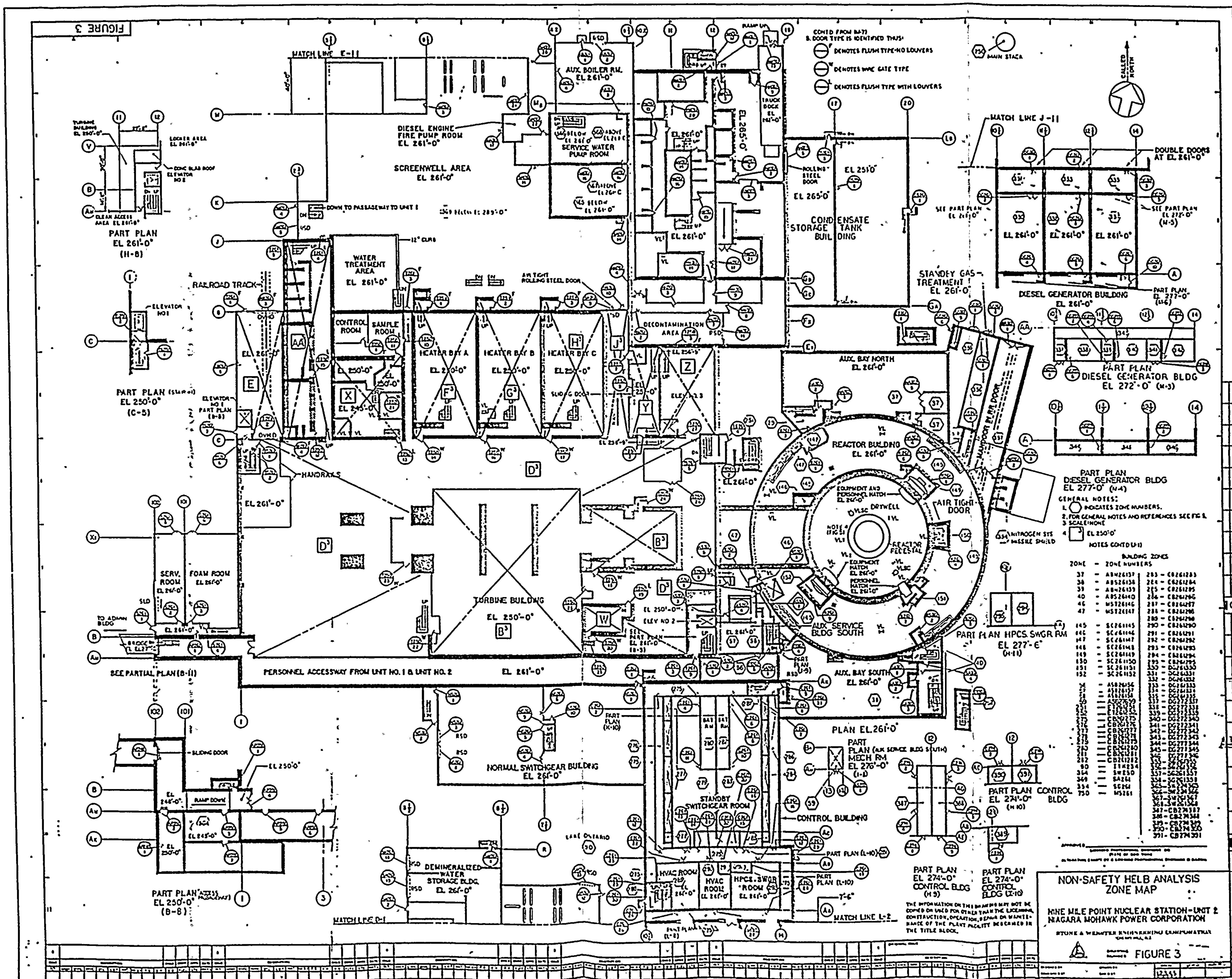

TI APERTURE CARD

Also Available On Aperture Card

8603070341-03

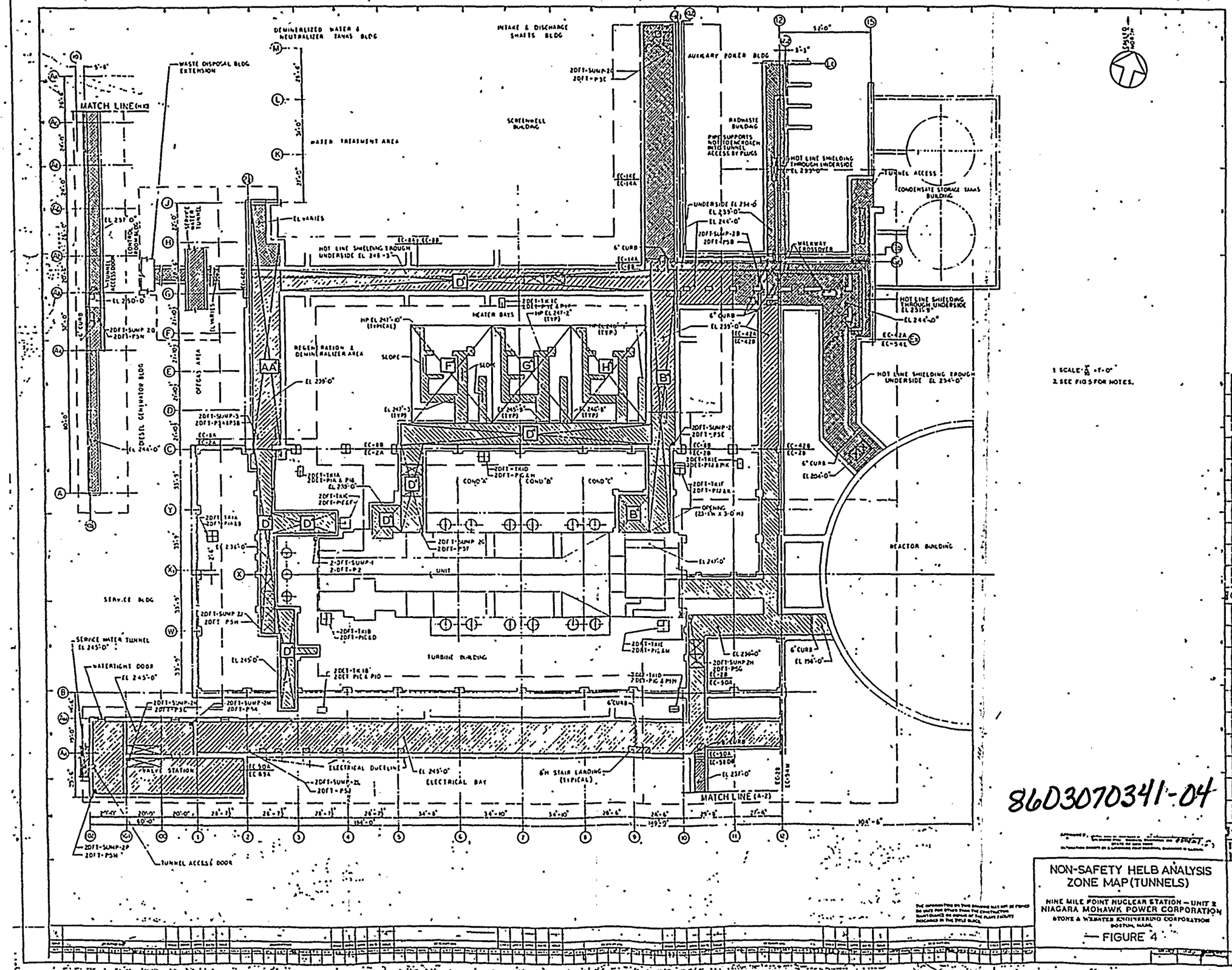

NON-SAFETY HELB ANALYSIS ZONE MAP (TUNNELS)

NINE MILE POINT NUCLEAR STATION — UNIT 2
NIAGARA MOHAWK POWER CORPORATION
STONE & WEBSTER ENGINEERING CORPORATION
BOSTON, MASS.

FIGURE 4

TI APERTURE CARD

Also Available On Aperture Card

8603070341-04

FIGURE 5

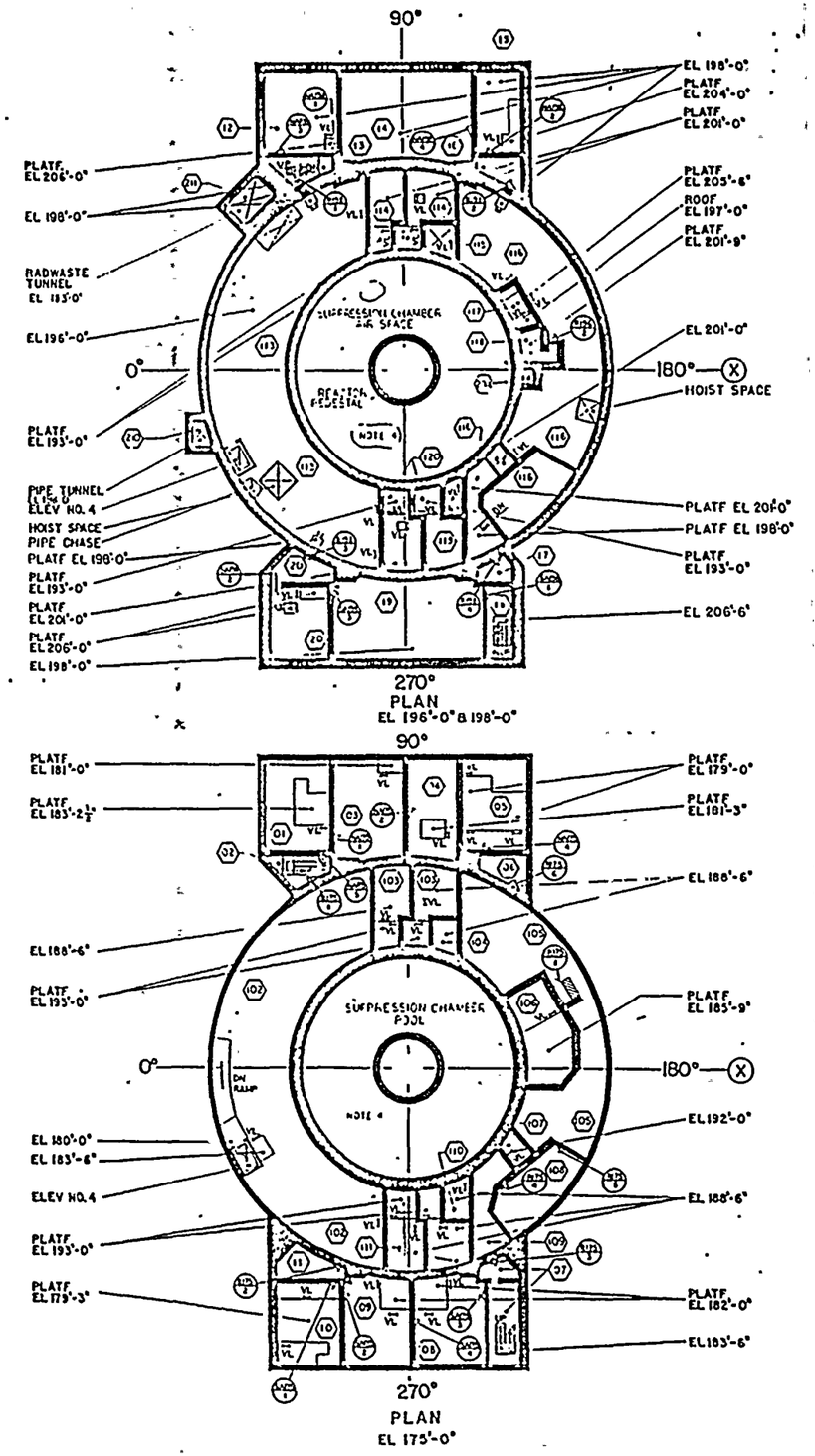

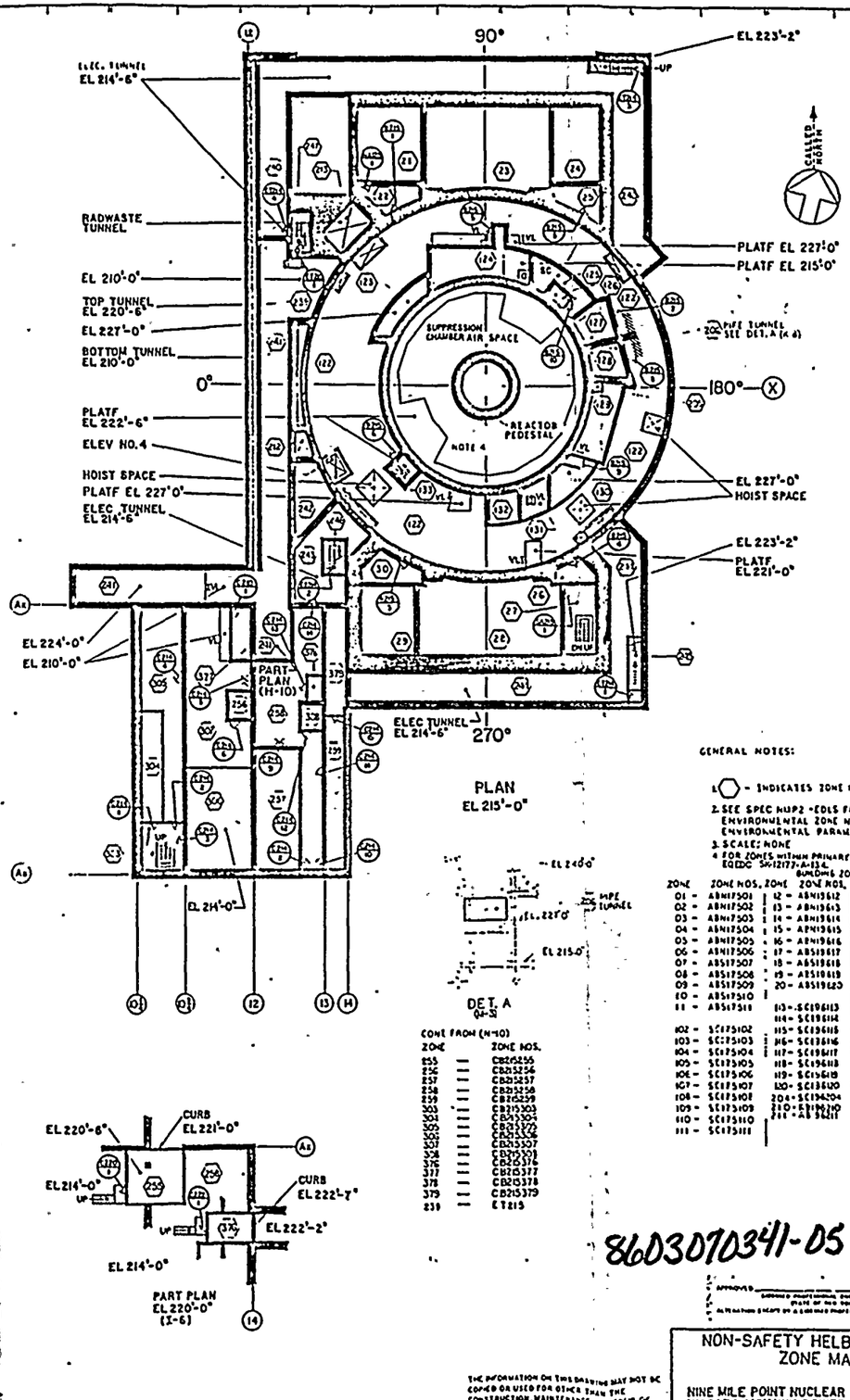

CONE FROM (H-10)

ZONE	ZONE NOS.
255	CB226256
256	CB225256
257	CB225257
258	CB225258
259	CB225259
301	CB215303
302	CB215302
303	CB215301
304	CB215304
305	CB215305
306	CB215306
307	CB215307
308	CB215308
309	CB215309
310	CB215310
311	CB215311
312	CB215312
313	CB215313
314	CB215314
315	CB215315
316	CB215316
317	CB215317
318	CB215318
319	CB215319
239	ET215

GENERAL NOTES:

1. ⬡ - INDICATES ZONE NUMBERS
2. SEE SPEC NUP2-EDLS FOR A DESCRIPTION OF ENVIRONMENTAL ZONE NUMBERS AND THE ENVIRONMENTAL PARAMETERS FOR EACH ZONE
3. SCALE: NONE
4. FOR ZONES WITHIN PRIMARY CONTAINMENT SEE - EQEDC SK-12177-A-13-4 BUILDING ZONES

ZONE	ZONE NOS.	ZONE	ZONE NOS.	ZONE	ZONE NOS.
01 -	ABN17501	12 -	ABN13612	21 -	ABN21521
02 -	ABN17502	13 -	ABN13613	22 -	ABN21522
03 -	ABN17503	14 -	ABN13614	23 -	ABN21523
04 -	ABN17504	15 -	ABN13615	24 -	ABN21524
05 -	ABN17505	16 -	ABN13616	25 -	ABN21525
06 -	ABN17506	17 -	ABS18617	26 -	ABS21526
07 -	ABS17507	18 -	ABS18618	27 -	ABS21527
08 -	ABS17508	19 -	ABS18619	28 -	ABS21528
09 -	ABS17509	20 -	ABS19620	29 -	ABS21529
10 -	ABS17510			30 -	ABS21530
11 -	ABS17511				
		03 -	SC196613		
		04 -	SC196614	122 -	SC215122
102 -	SC175102	15 -	SC196615	123 -	SC215123
103 -	SC175103	16 -	SC196616	124 -	SC215124
104 -	SC175104	17 -	SC196617	125 -	SC215125
105 -	SC175105	18 -	SC196618	126 -	SC215126
106 -	SC175106	19 -	SC196619	127 -	SC215127
107 -	SC175107	20 -	SC196620	128 -	SC215128
108 -	SC175108	204 -	SC194204	129 -	SC215129
109 -	SC175109	210 -	SC196210	130 -	SC215130
110 -	SC175110	211 -	SC196211	131 -	SC215131
111 -	SC175111			132 -	SC215132
				133 -	SC215133
				206 -	SC215206
				208 -	SC215208
				212 -	RB215212
				213 -	RB215213
				240 -	ET215240
				241 -	ET215241
				242 -	ET215242
				243 -	ET215243
				244 -	ET215244
				245 -	ET215245
				246 -	ET215246
				247 -	ET215247
				CONT. AT (K-10)	

8603070341-05

THE INFORMATION ON THIS DRAWING MAY NOT BE COPIED OR USED FOR OTHER THAN THE CONSTRUCTION, MAINTENANCE OR REPAIR OF THE PLANT FACILITY DESCRIBED IN THE TITLE BLOCK.

NON-SAFETY HELB ANALYSIS
ZONE MAP

NINE MILE POINT NUCLEAR STATION-UNIT 2
NIAGARA MOHAWK POWER CORPORATION

STONE & WEBSTER ENGINEERING CORPORATION

DRAWING NUMBER FIGURE 5

TI
APERTURE
CARD

Also Available On
Aperture Card

FIGURE 6

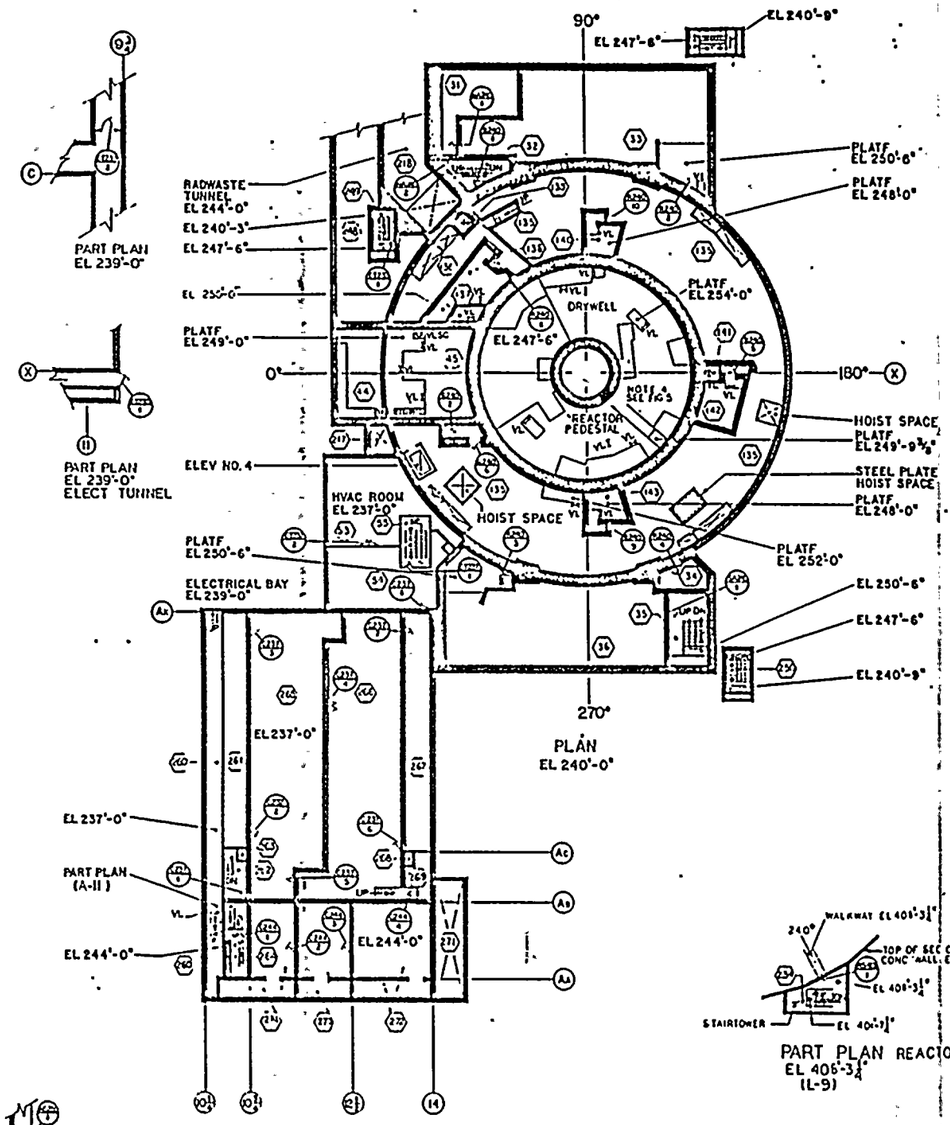

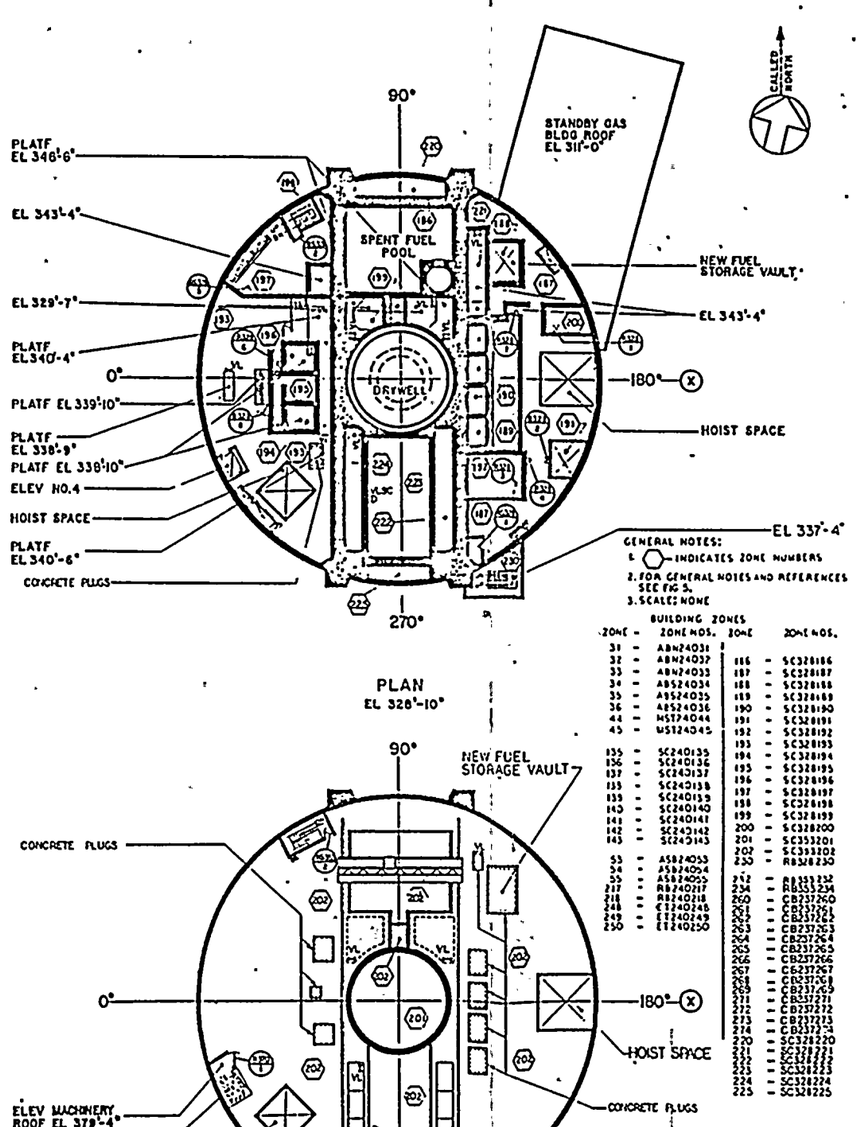

BUILDING ZONES

ZONE	ZONE NOS.	ZONE	ZONE NOS.
31	ABN24031		
32	ABN24032	186	SC328186
33	ABN24033	187	SC328187
34	ABS24034	188	SC328188
35	ABS24035	189	SC328189
36	ABS24036	190	SC328190
44	MST24044	191	SC328191
45	MST24045	192	SC328192
		193	SC328193
135	SC240135	194	SC328194
136	SC240136	195	SC328195
137	SC240137	196	SC328196
138	SC240138	197	SC328197
139	SC240139	198	SC328198
140	SC240140	199	SC328199
141	SC240141	200	SC328200
142	SC240142	201	SC353201
143	SC240143	202	SC353202
		230	RB328230
53	AS824053	232	RB353232
54	AS824054	234	RB353234
55	AS824055	260	CB237260
217	RB240217	261	CB237261
218	RB240218	262	CB237262
248	CB240248	263	CB237263
249	CB240249	264	CB237264
250	CB240250	265	CB237265
		266	CB237266
		267	CB237267
		268	CB237268
		269	CB237269
		271	CB237271
		272	CB237272
		273	CB237273
		274	CB237274
		220	SC328220
		221	SC328221
		222	SC328222
		223	SC328223
		224	SC328224
		225	SC328225

THE INFORMATION ON THIS DRAWING MAY NOT BE COPIED OR USED FOR OTHER THAN THE CONSTRUCTION, MAINTENANCE OR REPAIR OF THE PLANT FACILITY DESCRIBED IN THE TITLE BLOCK.

NON-SAFETY HELB ANALYSIS ZONE MAP

NINE MILE POINT NUCLEAR STATION-UNIT 2
NIAGARA MOHAWK POWER CORPORATION

STONE & WEBSTER ENGINEERING CORPORATION

DRAWING NUMBER FIGURE 6

TI APERTURE CARD

Also Available On Aperture Card

8603070341-06