NIS-2

VOLUME-1

EXHIBIT-0----------FORM NIS-2

EXHIBIT-1----------SUMMARY OF CONTENTS
AND EXCEPTIONS

EXHIBIT-2----------NIS-2 ATTACHMENT AND
SUMMARY REPORT

FORM NIS-2 OWNER'S REPORT FOR REPAIRS OR REPLACEMENTS
As Required by the Provisions of the ASME Code Section XI

1. Owner TVA - Nuclear Generation (Name) Date _____
1101 Market Street, Chattanooga, TN 37402-2801 (Address) Sheet 1 of 255

2. Plant Browns Ferry Nuclear Plant (Name) Unit 2
P.O. Box 2000, Decatur, AL 35609-2000 (Address) See attached NIS-2 Attachments (Repair Organization P.O. No., Job No., etc.)

3. Work Performed by TVA (Name) Type Code Symbol Stamp N/A
P.O. Box 2000, Decatur, AL 35609-2000 (Address) Authorization No. N/A
Expiration Date N/A

* 4. Identification of System _____

* 5. (a) Applicable Construction Code _____ 19____ Edition, _____ Addenda, _____ Code Case
(b) Applicable Edition of Section XI Utilized for Repairs or Replacements 19_____

* 6. Identification of Components Repaired or Replaced and Replacement Components

Name of Component	Name of Manufacturer	Manufacturer Serial No.	National Board No.	Other Identification	Year Built	Repaired, Replaced, or Replacement	ASME Code Stamped (Yes or No)

* 7. Description of Work _____

* 8. Tests Conducted: Hydrostatic ☐ Pneumatic ☐ Nominal Operating Pressure ☐
Other ☐ Pressure _____ psi Test Temp. _____ °F

NOTE: Supplemental sheets in form of lists, sketches, or drawings may be used, provided (1) size is 8½ in. x 11 in., (2) information in items 1 through 6 on this report is included on each sheet, and (3) each sheet is numbered and the number of sheets is recorded at the top of this form.

(12/82) This Form (E00030) may be obtained from the Order Dept., ASME, 345 E. 47th St., New York, N.Y. 10017

* For the information required in Steps 4 through 8, see Exhibit 2 (NIS-2 Attachments and Summary Reports). Summary Reports are included for work prior to September 22, 1989.

FORM NIS-2 (Back)

9. Remarks

Applicable Manufacturer's Data Reports to be attached

CERTIFICATE OF COMPLIANCE

We certify that the statements made in the report are correct and this repairs and replacements conforms to the rules of the ASME Code, Section XI.
repair or replacement

**See exceptions.

Type Code Symbol Stamp N/A

Certificate of Authorization No. N/A Expiration Date N/A

Signed [signature] VP BFO Date July 31, 19 91
Owner or Owner's Designee, Title

CERTIFICATE OF INSERVICE INSPECTION

I, the undersigned, holding a valid commission issued by the National Board of Boiler and Pressure Vessel Inspectors and the State or Province of Tennessee and employed by Hartford Steam Boiler Inspect.&Ins.Co. of Hartford Connecticut have inspected the components described in this Owner's Report during the period 9/15/84 to 6/27/91, and state that to the best of my knowledge and belief, the Owner has performed examinations and taken corrective measures described in this Owner's Report in accordance with the requirements of the ASME Code, Section XI. **See exceptions.

By signing this certificate neither the Inspector nor his employer makes any warranty, expressed or implied, concerning the examinations and corrective measures described in this Owner's Report. Furthermore, neither the Inspector nor his employer shall be liable in any manner for any personal injury or property damage or a loss of any kind arising from or connected with this inspection.

[signature] Commissions TN2153.
Inspector's Signature National Board, State, Province, and Endorsements

Date August 2 19 91

(12/82)

**Exceptions to Code requirements (see Exhibit 1)

E1 - No ANII review prior to commencing work (corrective action was taken). Reference Condition Adverse to Quality Reports (CAQR) CHA 890003713 and CAQR BFQ89042

E2 - Partial ANII review of work instruction.

E3 - NRC approved weld overlays [ref: NRC letter to S.A.White (A02860401010/L448604[illegible]) do not fully meet the requirements of IWA-4000. However, this work was planned [illegible] documented as ASME Section XI.

***CAQR BFP900255 documented a bypassed TVA imposed inspection point. A root-cause analysis of this CAQR was performed by CAQR BFP900252. Applicable site procedures were revised 8/13/90, and this TVA imposed inspection requirement has been modified.

Owner: TENNESSEE VALLEY AUTHORITY
Nuclear Generation
1101 Market Street
Chattanooga, TN 37402-2801

Plant: Browns Ferry Nuclear Plant
P.O. Box 2000
Decatur, AL 35609-2000

Unit: 2

EXHIBIT 1

SUMMARY OF CONTENTS AND EXCEPTIONS

Note: See NIS-2 Form (pg. 2) for explanation of exceptions.

Owner: TENNESSEE VALLEY AUTHORITY
Nuclear Generation
1101 Market Street
Chattanooga, TN 37402-2801

Plant: Browns Ferry Nuclear Plant
P.O. Box 2000
Decatur, AL 35609-2000

Unit: 2

PRE	WIN	YEAR	SYS	ORG	CLASS	ACTIVITY	STATUS
MRA	0155326	84	71	MAINT	2	REPLACED	E1
MRA	0159938	85	433	MAINT	2	REPAIRED	COMPLETE
MRA	0161621	84	75	MAINT	1	REPAIRED	E1
MRA	0161692	85	433	MAINT	2	REPAIRED	COMPLETE
MRA	0163422	85	74	MAINT	2	REPAIRED	E1
MRA	0163423	84	74	MAINT	2	REPAIRED	E1
MRA	0163424	85	74	MAINT	2	REPAIRED	E1
MRA	0163425	85	74	MAINT	1	REPAIRED	E1
MRA	0163448	85	74	MAINT	1	REPAIRED	COMPLETE
MRA	0163497	86	68	MAINT	1	REPAIRED	COMPLETE
MRA	0163498	86	68	MAINT	1	REPAIRED	COMPLETE
MRA	0163499	86	68	MAINT	1	REPAIRED	E1
MRA	0163500	86	68	MAINT	2	REPAIRED	COMPLETE
MRA	0163527	85	75	MAINT	2	REPLACED	E1
MRA	0163534	85	75	MAINT	2	REPAIRED	COMPLETE
MRA	0163537	85	75	MAINT	2	REPAIRED	COMPLETE
MRA	0163554	85	68	MAINT	1	REPAIRED	COMPLETE
MRA	0163555	85	68	MAINT	1	REPAIRED	COMPLETE
MRA	0163556	85	63	MAINT	1	REPAIRED	COMPLETE
MRA	0163557	85	68	MAINT	1	REPAIRED	COMPLETE
MRA	0163559	85	68	MAINT	1	REPAIRED	COMPLETE
MRA	0163560	85	68	MAINT	1	REPAIRED	COMPLETE
MRA	0163928	85	74	MODS	2	REPAIRED	COMPLETE
MRA	0163929	85	74	MAINT	2	REPLACED	COMPLETE
MRA	0164523	87	69	MAINT	1	REPLACED	COMPLETE
MRA	0164545	85	69	MAINT	1	REPLACED	COMPLETE
MRA	0164548	85	73	MAINT	2	REPAIRED	COMPLETE
MRA	0165076	85	74	MAINT	1	REPAIRED	COMPLETE
MRA	0165077	85	74	MAINT	1	REPLACED	COMPLETE
MRA	0165078	85	74	MAINT	1	REPAIRED	COMPLETE
MRA	0165079	85	74	MAINT	1	REPAIRED	COMPLETE
MRA	0165080	85	74	MAINT	1	REPAIRED	COMPLETE
MRA	0165081	85	74	MAINT	1	REPAIRED	COMPLETE
MRA	0165082	85	75	MAINT	1	REPAIRED	COMPLETE
MRA	0165084	85	3	MAINT	1	REPAIRED	COMPLETE
MRA	0165090	85	75	MAINT	1	REPAIRED	COMPLETE
MRA	0165126	85	3	MAINT	1	REPAIRED	COMPLETE
MRA	0165128	85	74	MAINT	1	REPAIRED	COMPLETE
MRA	0165135	85	75	MAINT	1	REPAIRED	COMPLETE
MRA	0165136	85	75	MAINT	1	REPAIRED	COMPLETE
MRA	0167985	84	1	MAINT	2	REPLACED	E1
MRA	0168092	85	68	MODS	1	REPAIRED	COMPLETE
MRA	0168093	85	68	MODS	1	REPAIRED	COMPLETE
MRA	0168097	85	68	MAINT	1	REPAIRED	E1
MRA	0168098	85	68	MAINT	1	REPAIRED	E1
MRA	0168099	85	74	MAINT	1	REPAIRED	E1
MRA	0168100	85	74	MAINT	1	REPAIRED	E1
MRA	0168643	84	69	MAINT	2	REPLACED	E1

Owner: TENNESSEE VALLEY AUTHORITY
Nuclear Generation
1101 Market Street
Chattanooga, TN 37402-2801

Plant: Browns Ferry Nuclear Plant
P.O. Box 2000
Decatur, AL 35609-2000

Unit: 2

PRE	WIN	YEAR	SYS	ORG	CLASS	ACTIVITY	STATUS
MRA	0168644	84	69	MAINT	1	REPLACED	E1
MRA	0169463	85	74	MAINT	2	REPAIRED	COMPLETE
MRA	0170016	85	68	MAINT	1	REPAIRED	COMPLETE
MRA	0172934	84	73	MAINT	2	REPLACED	E1
MRA	0172981	84	73	MAINT	2	REPAIRED	COMPLETE
MRA	0173745	84	73	MAINT	2	REPLACED	COMPLETE
MRA	0177364	88	74	MAINT	2	REPAIRED	COMPLETE
MRA	0177365	85	71	MAINT	2	REPAIRED	COMPLETE
MRA	0177375	86	74	MAINT	2	REPLACED	COMPLETE
MRA	0177674	86	74	MAINT	1	REPLACED	COMPLETE
MRA	0177702	85	73	MAINT	2	REPAIRED	COMPLETE
MRA	0177709	87	1	MAINT	1	REPLACED	COMPLETE
MRA	0177710	87	1	MAINT	1	REPLACED	COMPLETE
MRA	0177711	87	1	MAINT	1	REPLACED	COMPLETE
MRA	0177717	85	71	MODS	2	REPAIRED	COMPLETE
MRA	0177721	86	73	MODS	2	REPAIRED	COMPLETE
MRA	0177762	87	1	MAINT	1	REPAIRED	COMPLETE
MRA	0179409	85	75	MODS	2	REPAIRED	E1
MRA	0180284	85	63	MAINT	2	REPLACEMENT	E1
MRA	0181305	84	74	MAINT	2	REPAIRED	E1
MRA	0181306	84	74	MAINT	2	REPAIRED	E1
MRA	0181307	84	74	MAINT	2	REPAIRED	E1
MRA	0181313	84	74	MAINT	2	REPAIRED	E1
MRA	0181314	84	74	MAINT	2	REPAIRED	E1
MRA	0181315	85	74	MAINT	2	REPAIRED	E1
MRA	0181316	84	74	MAINT	2	REPAIRED	E1
MRA	0181676	84	74	MAINT	2	REPAIRED	E1
MRA	0182061	87	1	MAINT	1	REPAIRED	COMPLETE
MRA	0183060	85	74	MODS	1	REPLACED	COMPLETE
MRA	0183066	86	69	MAINT	1	REPLACED	COMPLETE
MRA	0183226	85	69	MAINT	1	REPAIRED	COMPLETE
MRA	0183227	85	68	MAINT	1	REPAIRED	COMPLETE
MRA	0190667	85	73	MAINT	2	REPAIRED	E1
MRA	0190668	86	68	MAINT	1	REPAIRED	COMPLETE
MRA	0190669	85	68	MAINT	1	REPLACEMENT	E1
MRA	0190670	85	68	MAINT	1	REPLACEMENT	E1
MRA	0190671	86	68	MAINT	1	REPAIRED	E1
MRA	0190672	85	74	MAINT	1	REPAIRED	E1
MRA	0190673	86	74	MAINT	1	REPAIRED	COMPLETE
MRA	0252811	84	85	MAINT	2	REPLACED	E1
MRA	0257554	84	85	MAINT	2	REPLACED	E1
MRA	0258806	85	74	MAINT	2	REPLACED	E1
MRA	0270463	85	68	MAINT	1	REPAIRED	COMPLETE
MRA	0538108	85	74	MAINT	1	REPAIRED	COMPLETE
MRA	0538109	85	74	MAINT	1	REPAIRED	COMPLETE
MRA	0567124	85	63	MAINT	2	REPLACED	COMPLETE
MRA	0567754	85	73	MAINT	2	REPAIRED	COMPLETE
MRA	0571066	85	73	MAINT	2	REPLACED	E1

Owner: TENNESSEE VALLEY AUTHORITY
Nuclear Generation
1101 Market Street
Chattanooga, TN 37402-2801

Plant: Browns Ferry Nuclear Plant
P.O. Box 2000
Decatur, AL 35609-2000

Unit: 2

PRE	WIN	YEAR	SYS	ORG	CLASS	ACTIVITY	STATUS
MRA	0620372	86	73	MAINT	2	REPLACED	E1
MRA	0620373	86	73	MAINT	2	REPLACED	E1
MRA	0625856	86	85	MAINT	2	REPLACED	COMPLETE
MRA	0625872	86	68	MAINT	1	REPAIRED	COMPLETE
MRA	0625911	86	74	MAINT	2	REPLACEMENT	E1
MRA	0700041	88	75	MAINT	1	REPAIRED	COMPLETE
MRA	0700083	86	74	MAINT	2	REPAIRED	COMPLETE
MRA	0706173	87	69	MAINT	1	REPLACED	COMPLETE
MRA	0706180	86	1	MAINT	1	REPLACED	COMPLETE
MRA	0706183	86	3	MAINT	1	REPLACED	COMPLETE
MRA	0706191	86	73	MAINT	1	REPLACEMENT	COMPLETE
MRA	0706960	86	3	MAINT	1	REPLACED	E1
MRA	0710433	86	68	MAINT	1	REPAIRED	E1
MRA	0712033	89	68	MAINT	1	REPAIRED	COMPLETE
MRA	0712677	89	85	MAINT	1	REPAIRED	E1
MRA	0714802	86	1	MAINT	1	REPLACED	COMPLETE
MRA	0714952	86	75	MODS	2	R/R	COMPLETE
MRA	0719417	87	1	MAINT	2	REPAIRED	E1
MRA	0723454	86	63	MAINT	2	REPLACED	E1
MRA	0731210	86	75	MAINT	2	REPLACED	E1
MRA	0741377	87	1	MAINT	2	REPAIRED	COMPLETE
MRA	0741380	86	1	MAINT	2	REPAIRED	E1
MRA	0741399	86	1	MAINT	2	REPAIRED	E1
MRA	0743443	87	2	MAINT	1	REPAIRED	E1
MRA	0744322	87	75	MAINT	2	REPLACED	COMPLETE
MRA	0760540	86	85	MAINT	2	REPAIRED	E1
MRA	0763586	87	1	MAINT	2	REPAIRED	COMPLETE
MRA	0766393	87	74	MAINT	2	REPAIRED	COMPLETE
MRA	0770974	87	71	MAINT	2	REPAIRED	COMPLETE
MRA	0770975	87	67	MAINT	1	REPAIRED	COMPLETE
MRA	0770983	87	74	MAINT	2	REPLACED	COMPLETE
MRA	0772009	87	85	MODS	2	REPAIRED	COMPLETE
MRA	0772026	87	75	MAINT	2	REPAIRED	COMPLETE
MRA	0772137	87	74	MAINT	2	REPAIRED	COMPLETE
MRA	0773765	87	67	MAINT	3	REPAIRED	COMPLETE
MRA	0773871	88	85	MAINT	1	REPLACED	E1
MRA	0773872	88	85	MAINT	1	REPLACED	E1
MRA	0773873	88	85	MAINT	1	REPLACED	E1
MRA	0773874	88	85	MAINT	1	REPLACED	E1
MRA	0773876	88	85	MAINT	1	REPLACED	E1
MRA	0773877	88	85	MAINT	1	REPLACED	E1
MRA	0773878	88	85	MAINT	1	REPLACED	E1
MRA	0773879	88	85	MAINT	1	REPLACED	E1
MRA	0773881	88	85	MAINT	1	REPLACED	E1
MRA	0773882	88	85	MAINT	1	REPLACED	E1
MRA	0773883	88	85	MAINT	1	REPLACED	E1
MRA	0773884	88	85	MAINT	1	REPLACED	E1
MRA	0773885	88	85	MAINT	1	REPLACED	E1

Owner: TENNESSEE VALLEY AUTHORITY
Nuclear Generation
1101 Market Street
Chattanooga, TN 37402-2801

Plant: Browns Ferry Nuclear Plant
P.O. Box 2000
Decatur, AL 35609-2000

Unit: 2

PRE	WIN	YEAR	SYS	ORG	CLASS	ACTIVITY	STATUS
MRA	0773886	88	85	MAINT	1	REPLACED	E1
MRA	0773887	88	85	MAINT	1	REPLACED	E1
MRA	0773888	88	85	MAINT	1	REPLACED	E1
MRA	0773889	88	85	MAINT	1	REPLACED	E1
MRA	0773890	88	85	MAINT	1	REPLACED	E1
MRA	0773891	88	85	MAINT	1	REPLACED	E1
MRA	0773892	88	85	MAINT	1	REPLACED	E1
MRA	0773893	88	85	MAINT	1	REPLACED	E1
MRA	0773894	88	85	MAINT	1	REPLACED	E1
MRA	0773895	88	85	MAINT	1	REPLACED	E1
MRA	0773896	88	85	MAINT	1	REPLACED	E1
MRA	0773897	88	85	MAINT	1	REPLACED	E1
MRA	0773898	88	85	MAINT	1	REPLACED	E1
MRA	0773899	88	85	MAINT	1	REPLACED	E1
MRA	0773900	88	85	MAINT	1	REPLACED	E1
MRA	0774771	88	63	MAINT	2	REPLACED	E1
MRA	0774981	87	74	MAINT	2	REPLACED	COMPLETE
MRA	0775558	88	73	MAINT	2	REPLACED	COMPLETE
MRA	0775691	88	74	MAINT	2	R/R	E1
MRA	0778324	87	74	MAINT	2	REPAIRED	COMPLETE
MRA	0778326	87	74	MAINT	2	REPAIRED	COMPLETE
MRA	0778337	87	74	MAINT	2	REPAIRED	E1
MRA	0778342	87	85	MAINT	2	REPAIRED	COMPLETE
MRA	0778485	87	74	MAINT	2	REPAIRED	COMPLETE
MRA	0795760	88	68	MAINT	1	REPAIRED	E1
MRA	0795810	87	74	MAINT	1	REPLACED	COMPLETE
MRA	0795815	88	85	MAINT	1	REPLACED	E1
MRA	0795816	88	85	MAINT	1	REPLACED	E1
MRA	0795817	88	85	MAINT	1	REPLACED	E1
MRA	0795818	88	85	MAINT	1	REPLACED	E1
MRA	0795819	88	85	MAINT	1	REPLACED	E1
MRA	0795820	88	85	MAINT	1	REPLACED	E1
MRA	0795821	88	85	MAINT	1	REPLACED	E1
MRA	0795822	88	85	MAINT	1	REPLACED	E1
MRA	0795823	88	85	MAINT	1	REPLACED	E1
MRA	0795824	88	85	MAINT	1	REPLACED	E1
MRA	0795825	88	85	MAINT	1	REPLACED	E1
MRA	0795826	88	85	MAINT	1	REPLACED	E1
MRA	0795827	88	85	MAINT	1	REPLACED	E1
MRA	0795828	88	85	MAINT	1	REPLACED	E1
MRA	0795829	88	85	MAINT	1	REPLACED	E1
MRA	0795830	88	85	MAINT	1	REPLACED	E1
MRA	0795831	88	85	MAINT	1	REPLACED	E1
MRA	0795832	88	85	MAINT	1	REPLACED	E1
MRA	0795882	88	01	MAINT	2	REPAIRED	COMPLETE
MRA	0795883	88	1	MAINT	2	REPAIRED	COMPLETE
MRA	0795885	88	1	MAINT	2	REPAIRED	COMPLETE
MRA	0795886	88	1	MAINT	2	REPAIRED	COMPLETE

Owner: TENNESSEE VALLEY AUTHORITY
Nuclear Generation
1101 Market Street
Chattanooga, TN 37402-2801

Plant: Browns Ferry Nuclear Plant
P.O. Box 2000
Decatur, AL 35609-2000

Unit: 2

PRE	WIN	YEAR	SYS	ORG	CLASS	ACTIVITY	STATUS
MRA	0795887	88	1	MAINT	2	REPAIRED	COMPLETE
MRA	0795888	88	1	MAINT	2	REPAIRED	COMPLETE
MRA	0795889	88	1	MAINT	2	REPAIRED	COMPLETE
MRA	0795890	88	1	MAINT	2	REPAIRED	COMPLETE
MRA	0803805	87	71	MAINT	2	REPLACED	COMPLETE
MRA	0804670	88	85	MAINT	2	REPAIRED	COMPLETE
MRA	0804673	87	73	MAINT	2	REPAIRED	E1
MRA	0805261	87	74	MAINT	2	REPAIRED	COMPLETE
MRA	0805287	87	74	MAINT	2	REPAIRED	COMPLETE
MRA	0807056	87	85	MAINT	1	REPAIRED	COMPLETE
MRA	0807989	88	74	MAINT	2	REPAIRED	E1
MRA	0807993	89	75	MAINT	1	REPLACED	COMPLETE
MRA	0807995	88	73	MAINT	2	REPAIRED	COMPLETE
MRA	0813746	89	74	MAINT	2	REPAIRED	COMPLETE
MRA	0813794	87	74	MAINT	1	REPAIRED	E1
MRA	0814759	87	74	MAINT	2	REPAIRED	E1
MRA	0814811	87	73	MAINT	2	REPAIRED	E1
MRA	0814813	87	73	MAINT	2	REPAIRED	E1
MRA	0814831	87	1	MAINT	1	REPAIRED	COMPLETE
MRA	0815964	88	85	MAINT	1	REPLACED	E1
MRA	0815966	88	85	MAINT	1	REPLACED	E1
MRA	0815967	88	85	MAINT	1	REPLACED	E1
MRA	0815968	88	85	MAINT	1	REPLACED	E1
MRA	0815969	88	85	MAINT	1	REPLACED	E1
MRA	0815970	88	85	MAINT	1	REPLACED	E1
MRA	0815971	88	85	MAINT	1	REPLACED	E1
MRA	0815972	88	85	MAINT	1	REPLACED	E1
MRA	0815973	88	85	MAINT	1	REPLACED	E1
MRA	0815974	88	85	MAINT	1	REPLACED	E1
MRA	0815975	88	85	MAINT	1	REPLACED	E1
MRA	0815976	88	85	MAINT	1	REPLACED	E1
MRA	0815977	88	85	MAINT	1	REPLACED	E1
MRA	0815978	88	85	MAINT	1	REPLACED	E1
MRA	0815979	88	85	MAINT	1	REPLACED	E1
MRA	0815980	88	85	MAINT	1	REPLACED	E1
MRA	0815981	88	85	MAINT	1	REPLACED	E1
MRA	0815982	88	85	MAINT	1	REPLACED	E1
MRA	0815983	88	85	MAINT	1	REPLACED	E1
MRA	0815984	88	85	MAINT	1	REPLACED	E1
MRA	0815985	88	85	MAINT	1	REPLACED	E1
MRA	0815986	88	85	MAINT	1	REPLACED	E1
MRA	0815987	88	85	MAINT	1	REPLACED	E1
MRA	0815988	88	85	MAINT	1	REPLACED	E1
MRA	0815989	88	85	MAINT	1	REPLACED	E1
MRA	0815990	88	85	MAINT	1	REPLACED	E1
MRA	0815991	88	85	MAINT	1	REPLACED	E1
MRA	0815992	88	85	MAINT	1	REPLACED	E1
MRA	0815993	88	85	MAINT	1	REPLACED	E1

Owner: TENNESSEE VALLEY AUTHORITY
Nuclear Generation
1101 Market Street
Chattanooga, TN 37402-2801

Plant: Browns Ferry Nuclear Plant
P.O. Box 2000
Decatur, AL 35609-2000

Unit: 2

PRE	WIN	YEAR	SYS	ORG	CLASS	ACTIVITY	STATUS
MRA	0815994	88	85	MAINT	1	REPLACED	E1
MRA	0815995	88	85	MAINT	1	REPLACED	E1
MRA	0815996	88	85	MAINT	1	REPLACED	E1
MRA	0815997	88	85	MAINT	1	REPLACED	E1
MRA	0815998	88	85	MAINT	1	REPLACED	E1
MRA	0815999	88	85	MAINT	1	REPLACED	E1
MRA	0816000	88	85	MAINT	1	REPLACED	E1
MRA	0819786	88	71	MAINT	2	REPLACED	COMPLETE
MRA	0819791	88	75	MAINT	2	REPLACED	COMPLETE
MRA	0819841	88	71	MAINT	2	REPAIRED	COMPLETE
MRA	0862866	88	74	MAINT	2	REPAIRED	COMPLETE
MRA	0870014	89	85	MAINT	2	REPLACED	E1
MRA	0870583	88	68	MAINT	1	REPAIRED	E1
MRA	0875075	89	75	MAINT	2	REPLACED	COMPLETE
MRA	0877016	88	71	MAINT	2	REPLACED	E1
MRA	0877017	88	71	MAINT	2	R/R	E1
MRA	0877018	88	71	MAINT	2	R/R	E1
MRA	0877019	88	74	MAINT	2	R/R	E1
MRA	0877020	88	74	MAINT	2	REPAIRED	E1
MRA	0877021	88	74	MAINT	2	REPAIRED	E1
MRA	0877022	88	74	MAINT	2	R/R	E1
MRA	0877023	88	74	MAINT	2	R/R	E1
MRA	0877024	88	74	MAINT	2	R/R	E1
MRA	0877033	88	73	MAINT	1	REPAIRED	E1
MRA	0877045	88	1	MAINT	1	R/R	E1
MRA	0879071	88	1	MAINT	2	REPLACED	E1
MRA	0891035	89	74	MAINT	2	REPAIRED	COMPLETE
MRA	0891855	89	85	MAINT	2	REPLACED	COMPLETE
MRA	0895727	88	71	MAINT	2	R/R	E1
MRA	0895728	88	71	MAINT	2	R/R	E1
MRA	0895729	88	74	MAINT	2	R/R	E1
MRA	0895731	88	74	MAINT	2	R/R	E1
MRA	0895732	88	63	MAINT	1	R/R	E1
MRA	0895741	88	01	MAINT	1	R/R	E1
MRA	0895742	88	1	MAINT	1	REPLACED	2 REPORTS
MRA	0895743	88	1	MAINT	1	REPAIRED	E1
MRA	0895744	88	74	MAINT	1	R/R	E1
MRA	0895745	88	74	MAINT	1	REPAIRED	E1
MRA	0897076	88	85	MAINT	2	REPLACED	E1
MRA	0897077	88	85	MAINT	2	REPLACED	E1
MRA	0897078	88	85	MAINT	2	REPLACED	E1
MRA	0897364	88	85	MAINT	2	REPLACED	E1
MRA	0897365	88	85	MAINT	2	REPLACED	E1
MRA	0897369	88	85	MAINT	2	REPLACED	E1
MRA	0897383	88	85	MAINT	2	REPLACED	E1
MRA	0897424	88	85	MAINT	2	REPLACED	E1
MRA	0897431	88	85	MAINT	2	REPLACED	E1
MRA	0897432	88	85	MAINT	2	REPLACED	E1

Owner: TENNESSEE VALLEY AUTHORITY
Nuclear Generation
1101 Market Street
Chattanooga, TN 37402-2801

Plant: Browns Ferry Nuclear Plant
P.O. Box 2000
Decatur, AL 35609-2000

Unit: 2

PRE	WIN	YEAR	SYS	ORG	CLASS	ACTIVITY	STATUS
MRA	0897433	88	85	MAINT	2	REPLACED	E1
MRA	0900554	89	68	MAINT	1	REPAIRED	COMPLETE
MRA	0902254	88	71	MAINT	2	REPLACED	COMPLETE
MRA	0906586	89	75	MAINT	2	REPLACED	COMPLETE
MRA	0908218	89	3	MAINT	1	REPAIRED	COMPLETE
MRA	0913239	89	85	MAINT	2	REPLACED	E1
MRA	0917831	89	71	MAINT	2	REPAIRED	COMPLETE
MRA	1009016	89	75	MAINT	1	REPAIRED	COMPLETE
MRA	1009020	89	1	MAINT	2	REPAIRED	COMPLETE
MRA	1009914	89	85	MAINT	2	REPLACED	E1
MRA	1011366	89	85	MAINT	2	REPLACED	COMPLETE

Owner: TENNESSEE VALLEY AUTHORITY
Nuclear Generation
1101 Market Street
Chattanooga, TN 37402-2801

Plant: Browns Ferry Nuclear Plant
P.O. Box 2000
Decatur, AL 35609-2000

Unit: 2

PRE	WIN	YEAR	SYS	ORG	CLASS	ACTIVITY	STATUS
WO.	07201-41	89	68	MAINT	1	REPLACEMENT	COMPLETE
WO.	08852-16	89	74	MAINT	2	REPAIRED	COMPLETE
WO.	10090-20	89	1	MAINT	2	REPAIRED	COMPLETE
WO.	10165-05	89	71	MAINT	2	REPLACEMENT	COMPLETE
WO.	908246	89	3	MODS	1	REPAIRED	COMPLETE
WO.	00604-00	90	63	MAINT	2	REPLACED	COMPLETE
WO.	06546-00	90	74	MAINT	2	REPAIRED	COMPLETE
WO.	07046-01	90	74	MAINT	2	REPAIRED	COMPLETE
WO.	09028-00	90	73	MAINT	2	REPLACED	COMPLETE
WO.	11435-00	90	63	MAINT	2	REPLACED	COMPLETE
WO.	15075-02	90	70	MAINT	2	REPAIRED	COMPLETE
WO.	16250-00	90	70	MODS	2	REPLACEMENT	COMPLETE
WO.	19013-00	90	85	MAINT	2	REPLACEMENT	COMPLETE
WO.	20213-00	90	74	MAINT	2	REPLACED	COMPLETE
WO.	20270-00	90	85	MAINT	2	REPLACED	COMPLETE
WO.	20466-00	90	74	MAINT	2	R/R	COMPLETE
WO.	20874-00	90	74	MAINT	2	REPLACED	COMPLETE
WO.	21090-00	90	63	MAINT	2	REPLACED	COMPLETE
WO.	22973-00	90	85	MAINT	2	REPLACED	COMPLETE
WO.	24109-00	90	73	MAINT	1	REPAIRED	COMPLETE
WO.	24287-00	91	68	MAINT	1	REPAIRED	COMPLETE
WO.	24586-02	91	01	MAINT	1	REPLACEMENT	COMPLETE
WO.	24661-02	91	01	MAINT	1	REPLACEMENT	COMPLETE
WO.	25964-00	91	71	MAINT	2	REPLACED	E1
WO.	26540-00	91	63	MAINT	2	REPLACEMENT	COMPLETE
WO.	28288-00	91	01	MAINT	1	REPLACED	COMPLETE
WO.	32012-00	91	75	MAINT	1	REPLACED	COMPLETE
WO.	32236-00	91	03	MAINT	1	REPLACED	COMPLETE
WO.	32238-00	91	63	MAINT	1	REPLACED	COMPLETE
WO.	32241-00	91	01	MAINT	1	REPLACED	COMPLETE
WO.	32242-00	91	01	MAINT	1	REPLACED	COMPLETE

Owner: TENNESSEE VALLEY AUTHORITY
Nuclear Generation
1101 Market Street
Chattanooga, TN 37402-2801

Plant: Browns Ferry Nuclear Plant
P.O. Box 2000
Decatur, AL 35609-2000

Unit: 2

PRE	WIN	YEAR	SYS	ORG	CLASS	ACTIVITY	STATUS
WP	2002	84	85	MODS	2	REPLACED	COMPLETE
WP	2003	84	64	MODS	2	REPLACED	COMPLETE
WP	2012	84	01	MODS	1	REPAIRED	COMPLETE
WP	2051	84	10	MODS	1	REPLACED	E2
WP	2053	84	73	MODS	1	REPLACED	COMPLETE
WP	2054	84	71	MODS	1	REPLACED	COMPLETE
WP	2055	84	75	MODS	2	REPLACED	COMPLETE
WP	2056	84	75	MODS	2	R/R	COMPLETE
WP	2057	84	75	MODS	2	REPLACED	COMPLETE
WP	2058	84	75	MODS	2	REPAIR/REPL	COMPLETE
WP	2059	84	75	MAINT	2	REPLACED	COMPLETE
WP	2060	84	74	MODS	2	REPLACED	COMPLETE
WP	2061	84	74	MODS	2	REPLACED	COMPLETE
WP	2062	84	74	MODS	2	REPLACED	COMPLETE
WP	2063	84	74	MODS	2	REPLACED	COMPLETE
WP	2064	84	74	MODS	2	REPAIRED	COMPLETE
WP	2067	84	74	MODS	2	REPLACED	COMPLETE
WP	2068	84	74	MODS	2	REPLACED	COMPLETE
WP	2069	84	74	MODS	2	REPLACED	COMPLETE
WP	2070	84	74	MODS	2	REPLACED	COMPLETE
WP	2071	84	75	MODS	2	REPLACED	COMPLETE
WP	2072	84	75	MODS	2	REPLACED	COMPLETE
WP	2073	84	75	MODS	2	REPLACED	COMPLETE
WP	2074	84	75	MODS	2	REPLACED	COMPLETE
WP	2075	84	75	MODS	2	R/R	COMPLETE
WP	2076	84	71	MODS	2	R/R	COMPLETE
WP	2077	84	71	MODS	2	R/R	COMPLETE
WP	2078	84	73	MODS	2	REPLACED	COMPLETE
WP	2079	84	73	MODS	2	REPLACED	COMPLETE
WP	2080	84	73	MODS	2	R/R	COMPLETE
WP	2081	84	73	MODS	2	R/R	E2
WP	2082	84	73	MODS	2	R/R	COMPLETE
WP	2091	84	85	MODS	2	REPLACED	COMPLETE
WP	2092	84	85	MODS	2	R/R	COMPLETE
WP	2093	84	85	MODS	2	R/R	COMPLETE
WP	2094	84	85	MODS	2	R/R	COMPLETE
WP	2112	84	73	MODS	2	R/R	COMPLETE
WP	2117	84	74	MODS	2	REPLACED	COMPLETE
WP	2134	84	85	MODS	2	REPLACED	COMPLETE
WP	2135	84	85	MODS	2	R/R	COMPLETE
WP	2136	84	85	MODS	2	REPLACED	COMPLETE
WP	2137	84	85	MODS	2	R/R	COMPLETE
WP	2138	84	74	MODS	1	REPLACED	COMPLETE
WP	2139	84	74	MODS	2	REPLACED	COMPLETE
WP	2154	84	75	MODS	2	R/R	COMPLETE
WP	2156	84	75	MODS	2	R/R	COMPLETE
WP	2157	84	74	MODS	2	R/R	COMPLETE
WP	2158	84	75	MODS	2	R/R	COMPLETE

Owner: TENNESSEE VALLEY AUTHORITY
Nuclear Generation
1101 Market Street
Chattanooga, TN 37402-2801

Plant: Browns Ferry Nuclear Plant
P.O. Box 2000
Decatur, AL 35609-2000

Unit: 2

PRE	WIN	YEAR	SYS	ORG	CLASS	ACTIVITY	STATUS
WP	2194	84	75	MODS	2	REPLACEMENT	COMPLETE
WP	2204	84	2	MODS	2	REPLACED	E2
WP	2219	84	74	MODS	2	REPLACED	COMPLETE
WP	2238	84	01	MAINT	1	REPAIRED	COMPLETE
WP	2060	85	68	MODS	1	REPLACED	COMPLETE
WP	2069	85	68	MODS	1	REPLACED	COMPLETE
WP	2079	85	68	MODS	1	R/R	COMPLETE
WP	2080	85	69	MODS	1	REPLACED	COMPLETE
WP	2087	85	71	MODS	2	R/R	COMPLETE(4)
WP	2096	85	68	MODS	1	OVERLAY	E3
WP	2097	85	68	MODS	1	R/R	COMPLETE
WP	2109	85	68	MODS	1	REPLACED	COMPLETE
WP	2118	85	01	MODS	1	REPAIRED	COMPLETE
WP	2160	85	74	MODS	2	R/R	E2
WP	2179	85	74	MAINT	1	R/R	COMPLETE
WP	2015	86	73	MODS	2	REPLACED	COMPLETE
WP	2059	86	3	MAINT	1	REPAIRED	COMPLETE
WP	2079	86	1	MODS	2	REPLACED	COMPLETE
WP	2113	86	74	MODS	2	REPLACED	COMPLETE
WP	2114	86	74	MODS	2	REPLACED	COMPLETE
WP	2115	86	74	MODS	2	REPLACED	COMPLETE
WP	2116	86	74	MODS	2	REPLACED	E1
WP	2117	86	75	MODS	2	REPLACED	COMPLETE
WP	2118	86	75	MODS	2	REPLACED	COMPLETE
WP	2119	86	75	MODS	2	REPLACED	COMPLETE
WP	2172	86	68	MODS	1	REPLACED	COMPLETE
WP	2173	86	68	MODS	1	REPLACED	COMPLETE
WP	2174	86	68	MODS	1	REPLACED	COMPLETE
WP	2175	86	68	MODS	1	REPLACED	COMPLETE
WP	2176	86	68	MODS	1	REPLACED	COMPLETE
WP	2177	86	68	MODS	1	REPLACED	COMPLETE
WP	2178	86	68	MODS	1	REPLACED	COMPLETE
WP	2179	86	68	MODS	1	REPLACED	COMPLETE
WP	2180	86	68	MODS	1	REPLACED	COMPLETE
WP	2181	86	68	MODS	1	REPLACED	COMPLETE
WP	2030	87	71	MODS	2	REPLACED	COMPLETE
WP	2093	87	1/3	MODS	1	REPLACED	COMPLETE
WP	2106	87	69	MODS	1	OVERLAY	E3
WP	2121	87	70	MODS	2	REPLACED	COMPLETE
WP	2123	87	70	MODS	2	R/R	COMPLETE
WP	2125	87	74	MODS	2	REPLACED	COMPLETE
WP	2126	87	73	MODS	2	REPLACEMENT	COMPLETE
WP	2127	87	73	MODS	2	REPLACED	COMPLETE
WP	2130	87	71	MODS	2	REPLACED	COMPLETE
WP	2150	87	71	MODS	2	REPLACED	COMPLETE
WP	2170	87	74	MODS	2	REPAIRED	COMPLETE
WP	2204	87	10	MODS	1	R/R	COMPLETE
WP	2208	87	73	MODS	2	R/R	COMPLETE

Owner: TENNESSEE VALLEY AUTHORITY
Nuclear Generation
1101 Market Street
Chattanooga, TN 37402-2801

Plant: Browns Ferry Nuclear Plant
P.O. Box 2000
Decatur, AL 35609-2000

Unit: 2

PRE	WIN	YEAR	SYS	ORG	CLASS	ACTIVITY	STATUS
WP	2217	87	10	MODS	1	R/R	COMPLETE
WP	2218	87	10	MODS	1	R/R	COMPLETE
WP	2230	87	71	MODS	2	REPLACED	COMPLETE
WP	2283	87	68	MAINT	1	REPLACEMENT	COMPLETE
WP	2284	87	68	MODS	1	R/R	COMPLETE
WP	2285	87	68	MODS	1	R/R	COMPLETE
WP	2286	87	68	MODS	1	REPLACED	COMPLETE
WP	2295	87	85	MODS	2	REPAIRED	COMPLETE
WP	2007	88	73	MODS	2	REPAIRED	COMPLETE
WP	2008	88	74	MODS	1	R/R	COMPLETE
WP	2009	88	74	MODS	1	R/R	COMPLETE
WP	2341	88	75	MODS	0	R/R	COMPLETE
WP	2342	88	74	MODS	2	R/R	COMPLETE
WP	2344	88	85	MODS	2	R/R	COMPLETE
WP	2344	88	74	MODS	2	R/R	COMPLETE
WP	2493	88	63	MODS	1	REPLACED	COMPLETE
WP	2511	88	73	MODS	1	R/R	COMPLETE
WP	2535	88	3	MODS	1	REPLACED	COMPLETE
WP	2550	88	1	MODS	1	REPLACED	COMPLETE
WP	2551	88	3	MODS	1	REPLACED	COMPLETE
WP	2556	88	74	MODS	2	REPLACED	COMPLETE
WP	2563	88	74	MODS	2	REPLACED	COMPLETE
WP	2564	88	74	MODS	2	REPLACED	COMPLETE
WP	2568	88	3	MODS	2	R/R	COMPLETE
WP	2569	88	3	MODS	1	REPLACED	COMPLETE
WP	2579	88	74	MODS	2	REPLACED	COMPLETE
WP	2600	88	03	MODS	1	REPLACED	COMPLETE
WP	2601	88	3	MODS	1	REPLACEMENT	COMPLETE
WP	2602	88	03	MODS	1	REPLACED	COMPLETE
WP	2603	88	03	MODS	1	REPLACED	COMPLETE
WP	2609	88	10	MODS	1	REPLACEMENT	COMPLETE
WP	2612	88	74	MODS	1	REPLACED	COMPLETE
WP	2613	88	74	MODS	2	REPLACEMENT	COMPLETE
WP	2614	88	74	MODS	2	REPLACED	COMPLETE
WP	2095	89	77	MODS	2	REPLACED	COMPLETE
WP	2189	89	75	MODS	1	REPLACED	COMPLETE
WP	2190	89	74	MODS	2	REPLACED	COMPLETE
WP	2302	89	68	MODS	1	OVERLAY	E3
WP	2303	89	69	MODS	1	OVERLAY	E3
WP	2304	89	69	MODS	1	OVERLAY	E3
WP	2305	89	68	MODS	1	OVERLAY	E3
WP	2306	89	68	MODS	1	OVERLAY	E3
WP	2316	89	74	MODS	2	REPLACED	COMPLETE
WP	2385	89	71	MODS	2	REPLACED	COMPLETE
WP	2405	89	75	MODS	1	REPLACED	COMPLETE
WP	2419	89	01	MODS	1	REPLACEMENT	COMPLETE
WP	2424	89	3	MODS	1	REPAIRED	COMPLETE
WP	2425	89	74	MODS	2	REPLACED	COMPLETE

Owner: TENNESSEE VALLEY AUTHORITY
Nuclear Generation
1101 Market Street
Chattanooga, TN 37402-2801

Plant: Browns Ferry Nuclear Plant
P.O. Box 2000
Decatur, AL 35609-2000

Unit: 2

PRE	WIN	YEAR	SYS	ORG	CLASS	ACTIVITY	STATUS
WP	2431	89	75	MODS	1	REPLACED	COMPLETE
WP	2432	89	73	MODS	2	REPLACED	COMPLETE
WP	2433	89	73	MODS	2	REPLACED	COMPLETE
WP	2434	89	85	MODS	1	REPLACEMENT	COMPLETE
WP	2440	89	73	MODS	2	REPLACEMENT	COMPLETE
WP	2441	89	73	MODS	2	REPLACEMENT	COMPLETE
WP	2442	89	73	MODS	2	REPLACEMENT	COMPLETE
WP	2443	89	63	MODS	1	REPLACED	COMPLETE
WP	2447	89	1	MODS	1	REPLACEMENT	COMPLETE
WP	2448	89	74	MODS	2	REPLACED	COMPLETE
WP	2449	89	1	MODS	1	REPLACEMENT	COMPLETE
WP	2450	89	1	MODS	1	REPLACEMENT	COMPLETE
WP	2451	89	1	MODS	1	REPLACEMENT	COMPLETE
WP	2453	89	1	MODS	1	REPLACEMENT	COMPLETE
WP	2454	89	01	MODS	1	REPLACEMENT	COMPLETE
WP	2456	89	71	MODS	1/2	REPLACEMENT	COMPLETE
WP	2457	89	71	MODS	2	REPLACED	COMPLETE
WP	2465	89	74	MODS	2	REPLACEMENT	COMPLETE
WP	2481	89	10	MODS	1	REPLACED	COMPLETE
WP	2484	89	73	MODS	1/2	REPLACEMENT	COMPLETE
WP	2488	89	77	MODS	2	REPLACEMENT	COMPLETE
WP	2489	89	73	MODS	2	R/R	COMPLETE
WP	2491	89	03	MODS	1	R/R	COMPLETE
WP	2513	89	74	MODS	2	REPLACEMENT	COMPLETE
WP	2514	89	74	MODS	2	REPLACEMENT	COMPLETE
WP	2533	89	85	MODS	2	REPLACEMENT	COMPLETE
WP	2534	89	85	MODS	2	REPLACEMENT	COMPLETE
WP	2537	89	63	MODS	2	REPLACED	COMPLETE
WP	2540	89	63	MODS	2	REPLACEMENT	COMPLETE
WP	2559	89	63	MODS	1	REPLACEMENT	COMPLETE
WP	2560	89	63	MODS	1	REPLACEMENT	COMPLETE
WP	2561	89	74	MODS	2	REPLACEMENT	COMPLETE
WP	2564	89	77	MODS	2	REPLACEMENT	COMPLETE
WP	2589	89	10	MODS	1	REPLACEMENT	E2
WP	2590	89	10	MODS	1	REPLACEMENT	COMPLETE
WP	2591	89	10	MODS	1	REPLACEMENT	COMPLETE
WP	2595	89	75	MODS	2	REPLACEMENT	COMPLETE
WP	2596	89	75	MODS	2	REPLACEMENT	COMPLETE
WP	2599	89	73	MODS	2	REPLACED	COMPLETE
WP	2605	89	74	MODS	2	REPAIRED	COMPLETE
WP	2610	89	71	MODS	2	REPLACEMENT	COMPLETE
WP	2611	89	73	MODS	2	REPLACEMENT	COMPLETE
WP	2612	89	73	MODS	2	REPLACEMENT	COMPLETE
WP	2616	89	74	MODS	2	REPLACEMENT	COMPLETE
WP	2623	89	75	MODS	1	REPLACEMENT	COMPLETE
WP	2637	89	74	MODS	1/2	REPLACEMENT	COMPLETE
WP	2654	89	68	MODS	1	REPLACEMENT	COMPLETE
WP	2661	89	75	MODS	1	REPLACEMENT	COMPLETE

Owner: TENNESSEE VALLEY AUTHORITY
Nuclear Generation
1101 Market Street
Chattanooga, TN 37402-2801

Plant: Browns Ferry Nuclear Plant
P.O. Box 2000
Decatur, AL 35609-2000

Unit: 2

PRE	WIN	YEAR	SYS	ORG	CLASS	ACTIVITY	STATUS
WP	2665	89	03	MODS	1	REPLACEMENT	COMPLETE
WP	2673	89	68	MODS	1	REPLACEMENT	COMPLETE
WP	2674	89	68	MODS	1	REPAIRED	COMPLETE
WP	2675	89	68	MODS	1	REPLACEMENT	COMPLETE
WP	0060	90	74	MODS	1/2	REPLACEMENT	COMPLETE
WP	0061	90	74	MODS	2	REPLACEMENT	COMPLETE
WP	0062	90	74	MODS	2	REPLACEMENT	COMPLETE
WP	2016	90	73	MODS	2	REPLACEMENT	COMPLETE
WP	2018	90	73	MODS	2	REPLACEMENT	COMPLETE
WP	2047	90	77	MODS	2	REPLACEMENT	COMPLETE
WP	2050	90	1	MODS	1/2	REPLACEMENT	COMPLETE
WP	2051	90	1	MODS	1/2	REPLACEMENT	COMPLETE
WP	2052	90	01	MODS	2	REPAIRED	COMPLETE
WP	2074	90	75	MODS	2	REPLACEMENT	COMPLETE
WP	2086	90	1	MODS	2	REPAIRED	COMPLETE
WP	2101	90	63	MODS	2	REPLACEMENT	COMPLETE
WP	2102	90	63	MODS	2	REPLACEMENT	COMPLETE
WP	2117	90	70	MODS	2	REPLACEMENT	COMPLETE
WP	2171	90	68/	MODS	1	REPLACEMENT	COMPLETE
WP	2172	90	68	MODS	1	REPLACEMENT	COMPLETE
WP	2179	90	73	MODS	2	REPLACEMENT	COMPLETE
WP	2191	90	71	MODS	1,2	REPLACED	COMPLETE
WP	2200	90	74	MODS	2	REPLACEMENT	COMPLETE
WP	2210	90	74	MODS	2	REPLACEMENT	COMPLETE
WP	2218	90	01	MODS	1	REPLACEMENT	***
WP	2311	90	73	MODS	1	REPAIRED	COMPLETE
WP	2341	90	75	MODS	2	REPLACEMENT	COMPLETE
WP	2342	90	75	MODS	2	REPLACEMENT	COMPLETE
WP	2420	90	74	MODS	2	REPLACEMENT	COMPLETE
WP	2421	90	74	MODS	2	REPLACEMENT	COMPLETE
WP	2463	90	71/	MODS	2	REPLACEMENT	COMPLETE
WP	2494	90	71	MODS	2	REPLACEMENT	COMPLETE
WP	2522	90	75	MODS	1	REPLACEMENT	COMPLETE
WP	2556	90	74	MODS	2	REPLACEMENT	COMPLETE
WP	2631	90	85	MODS	2	REPLACEMENT	COMPLETE
WP	2686	90	03	MODS	1	REPLACEMENT	COMPLETE
WP	2018	91	1	MODS	1	REPLACEMENT	COMPLETE

Owner: TENNESSEE VALLEY AUTHORITY
Nuclear Generation
1101 Market Street
Chattanooga, TN 37402-2801

Plant: Browns Ferry Nuclear Plant
P.O. Box 2000
Decatur, AL 35609-2000

Unit: 2

EXHIBIT 2

NIS-2 ATTACHMENTS AND SUMMARY REPORTS

Volume 1	255 pages
Volume 2	259 pages
Volume 3	222 pages
Volume 4	324 pages
Volume 5	316 pages

TENNESSEE VALLEY AUTHORITY
BROWNS FERRY NUCLEAR PLANT
SITE DIRECTOR STANDARD PRACTICE

SEP 22 1989

FORM PAGE 1 OF 1
FORM SDSP-403
SDSP 13.3

FORM SDSP-403
FORM NIS-2 ATTACHMENT

1. (OWNER) TENNESSEE VALLEY AUTHORITY
NUCLEAR POWER

DATE 5/19/90

2. (PLANT) BROWNS FERRY NUCLEAR PLANT
P.O. BOX 2000
DECATUR, ALABAMA

SHEET [a] 18 OF 255

MR# 155326

3. WORK PERFORMED BY: TVA
COMPANY

TYPE CODE SYMBOL STAMP [b] N/A

P.O. BOX 2000
ADDRESS

AUTHORIZATION NO. [b] N/A

DECATUR, AL
CITY AND STATE

EXPIRATION DATE [b] N/A

4. IDENTIFICATION OF SYSTEM 71 - RCIC

5(A). APPLICATION CONSTRUCTION CODE ANSI B31.1 19 67
EDITION 67 ADDENDA _____ CODE CASE N/A

5(B). APPLICATION EDITION OF SECTION XI UTILIZED FOR REPAIRS OR REPLACEMENTS: 1980

6(A). NAME OF COMPONENT(S) AND DESCRIPTION (INCLUDE SIZE, CAPACITY, MATERIAL, AND LOCATION AS NEEDED TO AID IN IDENTIFICATION)
2-CKV-71-564 Powell 3" Check ULV, model 9061WE
A216 WCB Body 900# Rating 2160 WOG @ 850°F

6(B). NAME OF MANUFACTURER WILLIAM POWELL Co.
ADDRESS OF MANUFACTURER (IF KNOWN) N/A

6(c). MANUFACTURER'S SERIAL NUMBER S/N 60895

6(D). NATIONAL BOARD NUMBER (IF APPLICABLE) N/A

6(E). OTHER IDENTIFICATION (SUBASSEMBLY NUMBER, HEAT NUMBER, ETC.)
model 9061WE

6(F). YEAR BUILT N/A CODE CLASS ☐ 1 ☒ 2

6(G). REPAIRED ☐ REPLACED ☒ [c] REPLACEMENT ☐ [d]

6(H). ASME CODE STAMPED YES ☐ NO ☒

7. BRIEF DESCRIPTION OF REPAIR OR REPLACEMENT WORK PERFORMED.
REPLACED DISC IN 2-CKV-71-564

8. TESTS CONDUCTED: HYDROSTATIC ☐ PNEUMATIC ☐
NOMINAL OPERATING PRESSURE ☐ OTHER ☐
PRESSURE _____ PSI TEST TEMPERATURE _____ F°

9. REMARKS: No Testing Required.

( ) APPLICABLE MANUFACTURERS DATA REPORT [e] TO BE ATTACHED.

RESPONSIBLE ENGR. Allen E. Cole / 5/19/90 DATE 5/19/90
mech maint.
ORGANIZATION

*

ANII _____ DATE _____

REF CAQRA CHA 890003713

[a] SHEET NOS. FILLED IN BY TESTING AND DIAGNOSTIC PROGRAMS BRANCH.
[b] FOR WORK PERFORMED BY CERTIFICATE HOLDER
[c] REPLACED (LIKE OR EQUIVALENT).
[d] REPLACEMENT (MODIFICATION).
[e] WHEN REQUIRED BY CONSTRUCTION CODE.

RETENTION PERIOD: LIFETIME RESPONSIBLE ORGANIZATION: NM-PROCESSES/SPECIAL PROGRAMS

Tennessee Valley Authority
Browns Ferry Nuclear Plant

Form 164
BF 17.8
Page 4 Of 5
AUG 0 7 1985

ASME SECTION XI SUMMARY REPORT

*Tennessee Valley Authority
*Office of Nuclear Power, 1750 CST2-C
*Browns Ferry Nuclear Plant Unit 2
*P.O. Box 2000
*Decatur, Alabama

Comm. Service Date 3-1-75
System 433
TVA Class D
Workplan/MR No. A-159938

Furnish the following for the repair or replacement for the as-left condition of the component (after field work is complete). Mark all blanks (indicate NA for items which do not apply).

National Board Number of repaired or replaced component. N/A

Name of the components and description (include size, capacity, material, and location)—These requirements may be satisfied by attaching an applicable drawing.
Attachment weld between 30" PSC Ring Header and restraint R-19

Name of Manufacturer N/A

Address of Manufacturer (if known) N/A

Manufacturer's component identification numbers (i.e., serial number, subassembly number, heat number). If more than one component is replaced, attach weld map and identify items by item number. N/A

Brief description of repair or replacement work performed, including conditions observed and corrective measures taken, as applicable (reference DCR, CAR, etc.; drawing may be attached with attached affected area circled). Build up undersized weld on PSC Ring Header restraint R-19

Brief description of post repair or replacement tests and examintaions (if required) by instruction or procedure number. SMMI 14.4.1.3-L, BF 17.8, N-VT-3, N-MT-1

ANII/ANI name, employer, and business address R. Russell Jr./B.J. Rice Hartford Steam Boiler Inspection and Insurance Company 4330 Georgetown Square, Atlanta, Ga. 30338

Date work completed 12-3-85

A.J. Tate 12-4-85
Cognizant Engineer Date

Retention: Period - Lifetime, Responsibility - Modifications Supervisor

*Revision

0510K

TENNESSEE VALLEY AUTHORITY
BROWNS FERRY NUCLEAR PLANT
SITE DIRECTOR STANDARD PRACTICE

SEP 22 1989

FORM PAGE 1
FORM SDSP-4C
SDSP 13.3

FORM SDSP-403
FORM NIS-2 ATTACHMENT

SHEET 20 of 255

REFERENCE CAQR# CHA890003713

1. (OWNER) TENNESSEE VALLEY AUTHORITY
NUCLEAR POWER

DATE 06-12-90

2. (PLANT) BROWNS FERRY NUCLEAR PLANT
P.O. BOX 2000
DECATUR, ALABAMA

SHEET [a] 1 OF 1

MR# 161621

3. WORK PERFORMED BY: TVA
COMPANY

TYPE CODE SYMBOL STAMP [b] N/A

P O BOX 2000
ADDRESS

AUTHORIZATION NO. [b] N/A

DECATUR ALABAMA
CITY AND STATE

EXPIRATION DATE [b] N/A

4. IDENTIFICATION OF SYSTEM SYSTEM-75

5(A). APPLICATION CONSTRUCTION CODE USAS B31.1.0 19 67
EDITION THRU ADDENDA N/A CODE CASE N/A

5(B). APPLICATION EDITION OF SECTION XI UTILIZED FOR REPAIRS OR REPLACEMENTS: 1980

6(A). NAME OF COMPONENT(S) AND DESCRIPTION (INCLUDE SIZE, CAPACITY, MATERIAL, AND LOCATION AS NEEDED TO AID IN IDENTIFICATION)
UNIT-2, RXBLDG, EL-585, 2-HGR-75-JJ1, JJ2

6(B). NAME OF MANUFACTURER TVA
ADDRESS OF MANUFACTURER (IF KNOWN) PO BOX 2000, DECATUR, ALA.

6(c). MANUFACTURER'S SERIAL NUMBER N/A

6(D). NATIONAL BOARD NUMBER (IF APPLICABLE) N/A

6(E). OTHER IDENTIFICATION (SUBASSEMBLY NUMBER, HEAT NUMBER, ETC.) N/A

6(F). YEAR BUILT N/A CODE CLASS ☒ 1 ☐ 2

6(G). REPAIRED ☒ REPLACED ☐ [c] REPLACEMENT ☐ [d]

6(H). ASME CODE STAMPED YES ☐ NO ☒

7. BRIEF DESCRIPTION OF REPAIR OR REPLACEMENT WORK PERFORMED.
REMOVE CORE SPRAY HANGER JJ-1 / JJ-2 TO FACILITATE
IHSI. REINSTALLED JJ-1 / JJ-2 AFTER IHSI IS COMPLETE.
WAS MAN 6-25-90

8. TESTS CONDUCTED: HYDROSTATIC ☐ PNEUMATIC ☐
NOMINAL OPERATING PRESSURE ☐ OTHER ☐
PRESSURE N/A PSI TEST TEMPERATURE N/A F[e]

9. REMARKS:

( ) APPLICABLE MANUFACTURERS DATA REPORT[e] TO BE ATTACHED.

RESPONSIBLE ENGR. R.W. MAYCOCK / SYSTEMS DATE 06-12-90
ORGANIZATION

ANII R. Russell R. DATE 6-20-90

* REF CAQR# CHA890003713

[a] SHEET NOS. FILLED IN BY TESTING AND DIAGNOSTIC PROGRAMS BRANCH.
[b] FOR WORK PERFORMED BY CERTIFICATE HOLDER
[c] REPLACED (LIKE OR EQUIVALENT).
[d] REPLACEMENT (MODIFICATION).
[e] WHEN REQUIRED BY CONSTRUCTION CODE.

RETENTION PERIOD: LIFETIME RESPONSIBLE ORGANIZATION: NM-PROCESSER/SPECIAL PROGRAMS

SHEET 21 of 25

Tennessee Valley Authority
Browns Ferry Nuclear Plant

Form 164
BF 17.8
Page 4 of 5
AUG 0 7 1985

ASME SECTION XI SUMMARY REPORT

*Tennessee Valley Authority
*Office of Nuclear Power, 1750 CST2-C
*Browns Ferry Nuclear Plant Unit 2
*P.O. Box 2000
*Decatur, Alabama

Comm. Service Date 3-1-75
System 43I
TVA Class D
Workplan/NR No. A-161693

Furnish the following for the repair or replacement for the as-left condition of the component (after field work is complete). Mark all blanks (indicate NA for items which do not apply).

National Board Number of repaired or replaced component. N/A

Name of the components and description (include size, capacity, material, and location)—These requirements may be satisfied by attaching an applicable drawing. Attachment weld between 30" ring header on restraint R-20

Name of Manufacturer N/A

Address of Manufacturer (if known) N/A

Manufacturer's component identification numbers (i.e., serial number, subassembly number, heat number). If more than one component is replaced, attach weld map and identify items by item number. N/A

Brief description of repair or replacement work performed, including conditions observed and corrective measures taken, as applicable (reference DCR, CAR, etc.; drawing may be attached with attached affected area circled). Grind oversized weld to meet acceptance criteria

Brief description of post repair or replacement tests and examintaions (if required) by instruction or procedure number. SMMI 14.4.1.3-L BF17.8, N-VT-3, N-MT-1, MAI 23 section 7.1

AHII/ANI name, employer, and business address R. Russell Jr / B.J. Rice Hartford Steam Boiler Inspection and Insurance Company 4330 Georgetown Square, Atlanta, Ga. 30338

Date work completed 12-3-85

N. L. Tate 12-4-85
Cognizant Engineer Date

Retention: Period - Lifetime, Responsibility - Modifications Supervisor

*Revision

0510K

P84

TENNESSEE VALLEY AUTHORITY
BROWNS FERRY NUCLEAR PLANT
SITE DIRECTOR STANDARD PRACTICE

SEP 22 1989

FORM PAGE 1 OF
FORM SDSP-403
SDSP 13.3

FORM SDSP-403
FORM NIS-2 ATTACHMENT

SHEET 22 of 255

* REF CAQR# CHA890003713

1. (OWNER) TENNESSEE VALLEY AUTHORITY
NUCLEAR POWER

DATE 06/10/90

2. (PLANT) BROWNS FERRY NUCLEAR PLANT
P.O. BOX 2000
DECATUR, ALABAMA

SHEET [a] 1 OF 1

MRH 163422

3. WORK PERFORMED BY: TVA
COMPANY

TYPE CODE SYMBOL STAMP [b] N/A

PO BOX 2000
ADDRESS

AUTHORIZATION NO. [b] N/A

DECATUR ALABAMA
CITY AND STATE

EXPIRATION DATE [b] N/A

4. IDENTIFICATION OF SYSTEM SYSTEM-74, RHR PIPE SUPPORT-H20 MRH 163422

5(A). APPLICATION CONSTRUCTION CODE USA B31.1.0 19 67
EDITION THRU ADDENDA N/A CODE CASE N/A

5(B). APPLICATION EDITION OF SECTION XI UTILIZED FOR REPAIRS OR REPLACEMENTS: 1980

6(A). NAME OF COMPONENT(S) AND DESCRIPTION (INCLUDE SIZE, CAPACITY, MATERIAL, AND LOCATION AS NEEDED TO AID IN IDENTIFICATION)
UNIT-2 - BAY-15, TOP OF TORUS, 2-RHR-74-H-20

6(B). NAME OF MANUFACTURER TVA
ADDRESS OF MANUFACTURER (IF KNOWN) PO BOX 2000 DECATUR ALA.

6(c). MANUFACTURER'S SERIAL NUMBER N/A

6(D). NATIONAL BOARD NUMBER (IF APPLICABLE) N/A

6(E). OTHER IDENTIFICATION (SUBASSEMBLY NUMBER, HEAT NUMBER, ETC.) N/A

6(F). YEAR BUILT N/A CODE CLASS ☐ 1 ☒ 2

6(G). REPAIRED ☒ REPLACED ☐ [c] REPLACEMENT ☐ [d]

6(H). ASME CODE STAMPED YES ☐ NO ☒

7. BRIEF DESCRIPTION OF REPAIR OR REPLACEMENT WORK PERFORMED.
GRIND, SLAG FLUSH, TO 6:1 TAPER. WELD FILL USING GTI1-0-1A OR SMW-1
BLEND WELD BUILD UP AREA WITH SURROUNDING PLATE

8. TESTS CONDUCTED: HYDROSTATIC ☐ PNEUMATIC ☐
NOMINAL OPERATING PRESSURE ☐ OTHER ☐
PRESSURE N/A PSI TEST TEMPERATURE N/A F°

9. REMARKS:

( ) APPLICABLE MANUFACTURERS DATA REPORT [e] TO BE ATTACHED.

RESPONSIBLE ENGR. R.W. AYCOCK / SYSTEM DATE 06/10/90
ORGANIZATION

*

ANII DATE

[a] SHEET NOS. FILLED IN BY TESTING AND DIAGNOSTIC PROGRAMS BRANCH.
[b] FOR WORK PERFORMED BY CERTIFICATE HOLDER
[c] REPLACED (LIKE OR EQUIVALENT).
[d] REPLACEMENT (MODIFICATION).
[e] WHEN REQUIRED BY CONSTRUCTION CODE.

RETENTION PERIOD: LIFETIME RESPONSIBLE ORGANIZATION: NM-PROCESSES/SPECIAL PROGRAMS

TENNESSEE VALLEY AUTHORITY
BROWNS FERRY NUCLEAR PLANT
SITE DIRECTOR STANDARD PRACTICE

SEP 22 1989

FORM PAGE 1 OF
FORM SDSP-403
SDSP 13.3

FORM SDSP-403
FORM NIS-2 ATTACHMENT

SHEET 23 of 255

* REF. CAQR4CHA890003713

1. (OWNER) TENNESSEE VALLEY AUTHORITY
NUCLEAR POWER

DATE 06/09/90

2. (PLANT) BROWNS FERRY NUCLEAR PLANT
P.O. BOX 2000
DECATUR, ALABAMA

SHEET [a] 1 OF 1

MR#163423

3. WORK PERFORMED BY: TVA
COMPANY

TYPE CODE SYMBOL STAMP [b] N/A

PO BOX 2000
ADDRESS

AUTHORIZATION NO. [b] N/A

DECATUR ALABAMA
CITY AND STATE

EXPIRATION DATE [b] N/A

4. IDENTIFICATION OF SYSTEM SYSTEM-74, H-29

5(A). APPLICATION CONSTRUCTION CODE USAS B31.1.0 19 67
EDITION THRU ADDENDA N/A CODE CASE N/A

5(B). APPLICATION EDITION OF SECTION XI UTILIZED FOR REPAIRS OR REPLACEMENTS: 1980

6(A). NAME OF COMPONENT(S) AND DESCRIPTION (INCLUDE SIZE, CAPACITY, MATERIAL, AND LOCATION AS NEEDED TO AID IN IDENTIFICATION)
UNIT-2, BAY-14, TOP OF TORUS, H-29 2-RHR-74-H-29

6(B). NAME OF MANUFACTURER TVA
ADDRESS OF MANUFACTURER (IF KNOWN) PO BOX 2000 DECATUR ALA.

6(c). MANUFACTURER'S SERIAL NUMBER N/A

6(D). NATIONAL BOARD NUMBER (IF APPLICABLE) N/A

6(E). OTHER IDENTIFICATION (SUBASSEMBLY NUMBER, HEAT NUMBER, ETC.) N/A

6(F). YEAR BUILT N/A CODE CLASS ☐ 1 ☒ 2

6(G). REPAIRED ☒ REPLACED ☐ [c] REPLACEMENT ☐ [d]

6(H). ASME CODE STAMPED YES ☐ NO ☐

7. BRIEF DESCRIPTION OF REPAIR OR REPLACEMENT WORK PERFORMED.
REMOVE SLAG BY GRINDING
WELD FILL DEPRESSION USING SMAW-1, GT-11-0-1A

8. TESTS CONDUCTED: HYDROSTATIC ☐ PNEUMATIC ☐
NOMINAL OPERATING PRESSURE ☐ OTHER ☐
PRESSURE N/A PSI TEST TEMPERATURE N/A F°

9. REMARKS:

( ) APPLICABLE MANUFACTURERS DATA REPORT [e] TO BE ATTACHED.

RESPONSIBLE ENGR. R.W. AYCOCK / SYSTEM DATE 06/09/90
ORGANIZATION

ANII * DATE

[a] SHEET NOS. FILLED IN BY TESTING AND DIAGNOSTIC PROGRAMS BRANCH.
[b] FOR WORK PERFORMED BY CERTIFICATE HOLDER
[c] REPLACED (LIKE OR EQUIVALENT).
[d] REPLACEMENT (MODIFICATION).
[e] WHEN REQUIRED BY CONSTRUCTION CODE.

RETENTION PERIOD: LIFETIME RESPONSIBLE ORGANIZATION: NM--PROCESSES/SPECIAL PROGRAMS

TENNESSEE VALLEY AUTHORITY
BROWNS FERRY NUCLEAR PLANT
SITE DIRECTOR STANDARD PRACTICE

SEP 22 1989

FORM PAGE 1 OF 1
FORM SDSP-403
SDSP 13.3

FORM SDSP-403
FORM NIS-2 ATTACHMENT

SHEET 24 of 255

REF CAQR # CHA890003713

1. (OWNER) TENNESSEE VALLEY AUTHORITY
NUCLEAR POWER

DATE 06/07/90

2. (PLANT) BROWNS FERRY NUCLEAR PLANT
P.O. BOX 2000
DECATUR, ALABAMA

SHEET [a] 1 OF 1

MR # 163424

3. WORK PERFORMED BY: TVA
COMPANY

TYPE CODE SYMBOL STAMP [b] N/A

PO BOX 2000
ADDRESS

AUTHORIZATION NO. [b] N/A

DECATUR ALABAMA
CITY AND STATE

EXPIRATION DATE [b] N/A

4. IDENTIFICATION OF SYSTEM 74 RHR PIPE SUPPORT-H-26

5(A). APPLICATION CONSTRUCTION CODE USAS B31.1.0 19 67
EDITION THRU ADDENDA N/A CODE CASE N/A

5(B). APPLICATION EDITION OF SECTION XI UTILIZED FOR REPAIRS OR REPLACEMENTS: 1980

6(A). NAME OF COMPONENT(S) AND DESCRIPTION (INCLUDE SIZE, CAPACITY, MATERIAL, AND LOCATION AS NEEDED TO AID IN IDENTIFICATION)
UNIT-2, EL-629 RHR PIPE SUPPORT H-26 (2-RHR-74-H-26)

6(B). NAME OF MANUFACTURER UNKNOWN
ADDRESS OF MANUFACTURER (IF KNOWN) UNKNOWN

6(c). MANUFACTURER'S SERIAL NUMBER N/A

6(D). NATIONAL BOARD NUMBER (IF APPLICABLE) N/A

6(E). OTHER IDENTIFICATION (SUBASSEMBLY NUMBER, HEAT NUMBER, ETC.) N/A

6(F). YEAR BUILT N/A CODE CLASS ☐ 1 ☒ 2

6(G). REPAIRED ☒ REPLACED ☐ [c] REPLACEMENT ☐ [d]

6(H). ASME CODE STAMPED YES ☐ NO ☒

7. BRIEF DESCRIPTION OF REPAIR OR REPLACEMENT WORK PERFORMED.
BLEND THE DEPRESSED AREA TO APPROX 6:1 TAPER.
WELD FILL DEPRESSIONS USING GTAW-0-1A

8. TESTS CONDUCTED: HYDROSTATIC ☐ PNEUMATIC ☐
NOMINAL OPERATING PRESSURE ☐ OTHER ☐
PRESSURE N/A PSI TEST TEMPERATURE N/A F°

9. REMARKS:

( ) APPLICABLE MANUFACTURERS DATA REPORT [e] TO BE ATTACHED.

RESPONSIBLE ENGR. R.W. HAYCOCK / SYSTEMS DATE 06/07/90
ORGANIZATION

ANII DATE

* REF CAQR # CHA 890003713

[a] SHEET NOS. FILLED IN BY TESTING AND DIAGNOSTIC PROGRAMS BRANCH.
[b] FOR WORK PERFORMED BY CERTIFICATE HOLDER
[c] REPLACED (LIKE OR EQUIVALENT).
[d] REPLACEMENT (MODIFICATION).
[e] WHEN REQUIRED BY CONSTRUCTION CODE.

RETENTION PERIOD: LIFETIME RESPONSIBLE ORGANIZATION: NM-PROCESSES/SPECIAL PROGRAMS

TENNESSEE VALLEY AUTHORITY
BROWNS FERRY NUCLEAR PLANT
SITE DIRECTOR STANDARD PRACTICE

SEP 22 1989

FORM PAGE 1 OF
FORM SDSP-403
SDSP 13.3

FORM SDSP-403
FORM NIS-2 ATTACHMENT

SHEET 25 of 255

* REFERENCE CAQR# CHA890003713

1. (OWNER) TENNESSEE VALLEY AUTHORITY
NUCLEAR POWER
DATE 06/08/90

2. (PLANT) BROWNS FERRY NUCLEAR PLANT
P.O. BOX 2000
DECATUR, ALABAMA
SHEET [a] 1 OF 1

MRH 163425

3. WORK PERFORMED BY: TVA
COMPANY
TYPE CODE SYMBOL STAMP [b] N/A

PO BOX 2000
ADDRESS
AUTHORIZATION NO. [b] N/A

DECATUR ALABAMA
CITY AND STATE
EXPIRATION DATE [b] N/A

4. IDENTIFICATION OF SYSTEM SYSTEM-74, RHR-PIPE SUPPORT H-19

5(A). APPLICATION CONSTRUCTION CODE USA B31.1.0 19 67
EDITION THRU ADDENDA N/A CODE CASE N/A

5(B). APPLICATION EDITION OF SECTION XI UTILIZED FOR REPAIRS OR REPLACEMENTS: 1980

6(A). NAME OF COMPONENT(S) AND DESCRIPTION (INCLUDE SIZE, CAPACITY, MATERIAL, AND LOCATION AS NEEDED TO AID IN IDENTIFICATION)
UNIT-2, H-19, TOP OF TORUS, 2-RHR-74-H-19

6(B). NAME OF MANUFACTURER UNKNOWN
ADDRESS OF MANUFACTURER (IF KNOWN) UNKNOWN

6(c). MANUFACTURER'S SERIAL NUMBER N/A

6(D). NATIONAL BOARD NUMBER (IF APPLICABLE) N/A

6(E). OTHER IDENTIFICATION (SUBASSEMBLY NUMBER, HEAT NUMBER, ETC.) N/A

6(F). YEAR BUILT N/A CODE CLASS ☒ 1 ☐ 2

6(G). REPAIRED ☒ REPLACED ☐ [c] REPLACEMENT ☐ [d]

6(H). ASME CODE STAMPED YES ☐ NO ☒

7. BRIEF DESCRIPTION OF REPAIR OR REPLACEMENT WORK PERFORMED.
BLEND THE DEPRESSION TO FORM A 6:1 TAPER PROFILE. WELD FILL DEPRESSION USING SMW-1, GT 11-0-1A

8. TESTS CONDUCTED: HYDROSTATIC ☐ PNEUMATIC ☐
NOMINAL OPERATING PRESSURE ☐ OTHER ☐
PRESSURE N/A PSI TEST TEMPERATURE N/A F°

9. REMARKS:

( ) APPLICABLE MANUFACTURERS DATA REPORT [e] TO BE ATTACHED.
RESPONSIBLE ENGR. R.W. AYCOCK / SYSTEM DATE 06/08/90
ORGANIZATION
ANII DATE

[a] SHEET NOS. FILLED IN BY TESTING AND DIAGNOSTIC PROGRAMS BRANCH.
[b] FOR WORK PERFORMED BY CERTIFICATE HOLDER
[c] REPLACED (LIKE OR EQUIVALENT).
[d] REPLACEMENT (MODIFICATION).
[e] WHEN REQUIRED BY CONSTRUCTION CODE.

RETENTION PERIOD: LIFETIME RESPONSIBLE ORGANIZATION: NM-PROCESSES/SPECIAL PROGRAMS

Tennessee Valley Authority
Bronws Ferry Nuclear Plant

Form 164
BF 17.8
Page 4 Of 5
AUG 0 7 1985

SHEET 26 of 255

ASME SECTION XI SUMMARY REPORT

*Tennessee Valley Authority
*Office of Nuclear Power, 1750 CST2-C
*Browns Ferry Nuclear Plant Unit 2
*P.O. Box 2000
*Decatur, Alabama

Comm. Service Date NA
System 74 GPM 11-1-85
TVA Class ~~B~~ A
~~Workplan~~/MR No. 163448

Furnish the following for the repair or replacement for the as-left condition of the component (after field work is complete). Mark all blanks (indicate NA for items which do not apply).

National Board Number of repaired or replaced component. NA

Name of the components and description (include size, capacity, material, and location)--These requirements may be satisfied by attaching an applicable drawing.
PACKING BLEED OFF LINE FROM 2-HCV-74-49. SUPPORT FOR BLEED OFF LINE VALVE 2-HCV-74-45 HAS CRACK IN WELD

Name of Manufacturer TVA CONSTRUCTION

Address of Manufacturer (if known) NA

Manufacturer's component identification numbers (i.e., serial number, subassembly number, heat number). If more than one component is replaced, attach weld map and identify items by item number. NA

Brief description of repair or replacement work performed, including conditions observed and corrective measures taken, as applicable (reference DCR, CAR, etc.; drawing may be attached with attached affected area circled). GROUND OUT OLD WELD, WELDED EXCAVATION & REPLACED SUPPORT WELD 2-74-49-1

Brief description of post repair or replacement tests and examintaions (if required) by instruction or procedure number. N-PT-1, N-VT-3

ANII/ANI name, employer, and business address Bill Rice/R. Russell - Hartford Steam Boiler Inspection & Insurance Co., 4330 Georgetown Square, Atlanta GA

Date work completed 10-10-85

[signature] 11-1-85
Cognizant Engineer Date

Retention: Period - Lifetime, Responsibility - Modifications Supervisor

*Revision

0510K

Tennessee Valley Authority
Browns Ferry Nuclear Plant

Form 164
BF 17.8
Page 4 Of 5

ASME SECTION XI SUMMARY REPORT

*Tennessee Valley Authority
*Office of Nuclear Power, 1750 CST2-C
*Browns Ferry Nuclear Plant Unit 2
*P.O. Box 2000
*Decatur, Alabama

Comm. Service Date ~~2/28/86~~ 3/1/75 x6
System Recirculation 8/20/86
TVA Class A
Workplan/MR No. A-163492

Furnish the following for the repair or replacement for the as-left condition of the component (after field work is complete). Mark all blanks (indicate NA for items which do not apply).

National Board Number of repaired or replaced component. SS-5 At 35°

Name of the components and description (include size, capacity, material, and location)—These requirements may be satisfied by attaching an applicable drawing.
Snubber SS-5 (35°) Lug Attachment

Name of Manufacturer NA

Address of Manufacturer (if known) NA

Manufacturer's component identification numbers (i.e., serial number, subassembly number, heat number). If more than one component is replaced, attach weld map and identify items by item number. NA

Brief description of repair or replacement work performed, including conditions observed and corrective measures taken, as applicable (reference DCR, CAR, etc.; drawing may be attached with attached affected area circled). Remove Existing Snubber Lug To Facilitate IHSI. Reinstall Snubber Lug After Completion of IHSI

Brief description of post repair or replacement tests and examintaions (if required) by instruction or procedure number. BF17.8, MAI22, MAI23, MMI45; N-VT-3, N-PT-1

AMII/AMI name, employer, and business address Bill Rice/Roosevelt Russell The Hartford Steamboiler Insp. And Ins. Co., 4330 Georgetown Square, Atlanta GA 30338

Date work completed 2/28/86

[signature] 7/15/86
Cognizant Engineer Date

Retention: Period - Lifetime, Responsibility - Modifications Supervisor

*Revision

0510K

Tennessee Valley Authority
Browns Ferry Nuclear Plant

Form 164
BF 17.8
Page 4 Of 5

ASME SECTION XI SUMMARY REPORT

*Tennessee Valley Authority
*Office of Nuclear Power, 1750 CST2-C
*Browns Ferry Nuclear Plant Unit 2
*P.O. Box 2000
*Decatur, Alabama

Comm. Service Date ~~2/28/86~~ 3/1/75 KG 8/2/86
System Recirculation
TVA Class A
Workplan/MR No. A-163498

Furnish the following for the repair or replacement for the as-left condition of the component (after field work is complete). Mark all blanks (indicate NA for items which do not apply).

National Board Number of repaired or replaced component. 55-5 (325°)

Name of the components and description (include size, capacity, material, and location)—These requirements may be satisfied by attaching an applicable drawing.
Snubber 55-5/325° Lug Attachment

Name of Manufacturer NA

Address of Manufacturer (if known) NA

Manufacturer's component identification numbers (i.e., serial number, subassembly number, heat number). If more than one component is replaced, attach weld map and identify items by item number. NA

Brief description of repair or replacement work performed, including conditions observed and corrective measures taken, as applicable (reference DCR, CAR, etc.; drawing may be attached with attached affected area circled). Remove Existing Snubber Lug To Facilitate IHSI. Reinstall Snubber Lug After Completion of IHSI.

Brief description of post repair or replacement tests and examintaions (if required) by instruction or procedure number. BF17.8, MAI22, MAI23, MMI45, N-VT-3, N-PT-1

ANII/AMI name, employer, and business address Bill Rice/Roosevelt Russell The Hartford Steembiler Insp. And Ins. Co., 4338 Georgetown Square, Atlanta GA 30338

Date work completed 2/28/86

[signature] 7/15/86
Cognizant Engineer Date

Retention: Period - Lifetime, Responsibility - Modifications Supervisor

*Revision

0510K

Tennessee Valley Authority
Browns Ferry Nuclear Plant

Form 164
BF 17.8
Page 4 Of 5

ASME SECTION XI SUMMARY REPORT

*Tennessee Valley Authority
*Office of Nuclear Power, 1750 CST2-C
*Browns Ferry Nuclear Plant Unit 2
*P.O. Box 2000
*Decatur, Alabama

Comm. Service Date ~~2/28/86~~ 3/1/75 KG 8/2/88
System Recirculation
TVA Class A
Workplan/MR No. A-163498

Furnish the following for the repair or replacement for the as-left condition of the component (after field work is complete). Mark all blanks (indicate NA for items which do not apply).

National Board Number of repaired or replaced component. 55-5 (325°)

Name of the components and description (include size, capacity, material, and location)—These requirements may be satisfied by attaching an applicable drawing.
Snubber 55-5 (325°) Lug Attachment

Name of Manufacturer NA

Address of Manufacturer (if known) NA

Manufacturer's component identification numbers (i.e., serial number, subassembly number, heat number). If more than one component is replaced, attach weld map and identify items by item number. NA

Brief description of repair or replacement work performed, including conditions observed and corrective measures taken, as applicable (reference DCR, CAR, etc.; drawing may be attached with attached affected area circled). Remove Existing Snubber Lug To Facilitate IHSI. Reinstall Snubber Lug After Completion of IHSI.

Brief description of post repair or replacement tests and examintaions (if required) by instruction or procedure number. BF17.8, MAI22, MAI23, MMI 45, N-VT-3, N-PT-1

ANII/ANI name, employer, and business address Bill Rice/Roosevelt Russell The Hartford Steamboiler Insp. And Ins. Co., 4338 Greenwood Square, Atlanta GA 30338

Date work completed 2/28/86

[signature] 7/15/86
Cognizant Engineer Date

Retention: Period - Lifetime, Responsibility - Modifications Supervisor

*Revision

0510K

FORM SDSP-403
FORM NIS-2 ATTACHMENT

* REF CAQR #CHA890003713

1. (OWNER) TENNESSEE VALLEY AUTHORITY
NUCLEAR POWER

DATE 6-22-90

2. (PLANT) BROWNS FERRY NUCLEAR PLANT
P.O. BOX 2000
DECATUR, ALABAMA

SHEET [a] 30 OF 255

MR A-163499

3. WORK PERFORMED BY: TVA
COMPANY

TYPE CODE SYMBOL STAMP [b] N/A

P.O. Box 2000
ADDRESS

AUTHORIZATION NO. [b] N/A

DECATUR ALA.
CITY AND STATE

EXPIRATION DATE [b] N/A

4. IDENTIFICATION OF SYSTEM 68 RECIRC. PIPE ATTACHMENT & SNUBBER 47B2408-4 47B2408-4 IA

5(A). APPLICATION CONSTRUCTION CODE USAS B31.1.0 19 67
EDITION THRU ADDENDA N/A CODE CASE N/A

5(B). APPLICATION EDITION OF SECTION XI UTILIZED FOR REPAIRS OR REPLACEMENTS: 1980

6(A). NAME OF COMPONENT(S) AND DESCRIPTION (INCLUDE SIZE, CAPACITY, MATERIAL, AND LOCATION AS NEEDED TO AID IN IDENTIFICATION)
UNIT 2 EL 556' INSIDE DRYWELL RECIRC. PIPE SUPPORT R-SS-01 (RECIRC.-2-SS-01 & 47B2408-4 & RECIRC.-2-SS-01 IA & 47B2408-4 IA.

6(B). NAME OF MANUFACTURER UNKNOWN
ADDRESS OF MANUFACTURER (IF KNOWN) UNKNOWN

6(c). MANUFACTURER'S SERIAL NUMBER N/A

6(D). NATIONAL BOARD NUMBER (IF APPLICABLE) N/A

6(E). OTHER IDENTIFICATION (SUBASSEMBLY NUMBER, HEAT NUMBER, ETC.) N/A

6(F). YEAR BUILT N/A CODE CLASS ☒ 1 ☐ 2

6(G). REPAIRED ☒ REPLACED ☐ [c] REPLACEMENT ☐ [d]

6(H). ASME CODE STAMPED YES ☐ NO ☒

7. BRIEF DESCRIPTION OF REPAIR OR REPLACEMENT WORK PERFORMED.
REMOVED SNUBBER AND LUG (INTEGRAL ATTACHMENT) AND REINSTALLED SNUBBER AND LUG (INTEGRAL ATTACHMENT).

8. TESTS CONDUCTED: HYDROSTATIC ☐ PNEUMATIC ☐
NOMINAL OPERATING PRESSURE ☐ OTHER ☐
PRESSURE N/A PSI TEST TEMPERATURE N/A F[e]

9. REMARKS:

( ) APPLICABLE MANUFACTURERS DATA REPORT[e] TO BE ATTACHED.

RESPONSIBLE ENGR. R.W. Aycock / SYSTEMS DATE 6-22-90
ORGANIZATION

ANII * DATE

* REF CAQR# CHA890003713

[a] SHEET NOS. FILLED IN BY TESTING AND DIAGNOSTIC PROGRAMS BRANCH.
[b] FOR WORK PERFORMED BY CERTIFICATE HOLDER
[c] REPLACED (LIKE OR EQUIVALENT).
[d] REPLACEMENT (MODIFICATION).
[e] WHEN REQUIRED BY CONSTRUCTION CODE.

M K 0000

Tennessee Valley Authority
Browns Ferry Nuclear Plant

Form 164
BF 17.8
Page 4 Of 5

ASME SECTION XI SUMMARY REPORT

*Tennessee Valley Authority
*Office of Nuclear Power, 1750 CST2-C
*Browns Ferry Nuclear Plant Unit 2
*P.O. Box 2000
*Decatur, Alabama

Comm. Service Date ~~2/28/86~~ 3/1/75 KG 8/21/86
System Recirculation
TVA Class A
Workplan/MR No. A-163499

Furnish the following for the repair or replacement for the as-left condition of the component (after field work is complete). Mark all blanks (indicate NA for items which do not apply).

National Board Number of repaired or replaced component. SS-7

Name of the components and description (include size, capacity, material, and location)—These requirements may be satisfied by attaching an applicable drawing.
Snubber SS-7 Lug Attachment

Name of Manufacturer NA

Address of Manufacturer (if known) NA

Manufacturer's component identification numbers (i.e., serial number, subassembly number, heat number). If more than one component is replaced, attach weld map and identify items by item number. NA

Brief description of repair or replacement work performed, including conditions observed and corrective measures taken, as applicable (reference DCR, CAR, etc.; drawing may be attached with attached affected area circled). Remove Existing Snubber Lug To Facilitate IHSI. Reinstall Snubber Lug After Completion of IHSI.

Brief description of post repair or replacement tests and examintaions (if required) by instruction or procedure number. BF17.8, MAI22, MAI23, MMI45, N-VT-3, N-PT-1

ANII/ANI name, employer, and business address Bill Rice/Roosevelt Russell The Hartford Steamboiler Insp. And Ins. Co., 4338 Georgetown Square, Atlanta GA 30338

Date work completed 7/28/86

[signature] 7/15/86
Cognizant Engineer Date

Retention: Period - Lifetime, Responsibility - Modifications Supervisor

*Revision

0510K

Tennessee Valley Authority
Browns Ferry Nuclear Plant

Form 164
BF 17.8
Page 4 Of 5

ASME SECTION XI SUMMARY REPORT

*Tennessee Valley Authority
*Office of Nuclear Power, 1750 CST2-C
*Browns Ferry Nuclear Plant Unit 2
*P.O. Box 2000
*Decatur, Alabama

Comm. Service Date ~~3/28/81~~ 3/1/75 KG 6/20/86
System Recirculation
TVA Class A
Workplan (MR) No. A-163500

Furnish the following for the repair or replacement for the as-left condition of the component (after field work is complete). Mark all blanks (indicate NA for items which do not apply).

National Board Number of repaired or replaced component. SS-8

Name of the components and description (include size, capacity, material, and location)—These requirements may be satisfied by attaching an applicable drawing.
Snubber SS-8 Lug Attachment

Name of Manufacturer NA

Address of Manufacturer (if known) NA

Manufacturer's component identification numbers (i.e., serial number, subassembly number, heat number). If more than one component is replaced, attach weld map and identify items by item number. NA

Brief description of repair or replacement work performed, including conditions observed and corrective measures taken, as applicable (reference DCR, CAR, etc.; drawing may be attached with attached affected area circled). Remove Existing Snubber Lug To Facilitate - IHSI. Reinstall Snubber Lug After Completion of IHSI.

Brief description of post repair or replacement tests and examintaions (if required) by instruction or procedure number. BF17.8, MAI22, MAI23, MMI45, N-VT-3, N-PT-1

ANII/ANI name, employer, and business address Bill Rice/Roosevelt Russell The Hartford Steamboiler Insp. And Ins. Co., 4338 Georgetown Square, Atlanta GA 30338

Date work completed 2/28/86

[signature] 7/15/86
Cognizant Engineer Date

Retention: Period - Lifetime, Responsibility - Modifications Supervisor

*Revision

0510K

TENNESSEE VALLEY AUTHORITY
BROWNS FERRY NUCLEAR PLANT
SITE DIRECTOR STANDARD PRACTICE

SEP 22 1989

FORM PAGE 1 OF 1
FORM SDSP-403
SDSP 13.3

FORM SDSP-403
FORM NIS-2 ATTACHMENT

SHEET 33 OF 255

1. (OWNER) TENNESSEE VALLEY AUTHORITY
NUCLEAR POWER

DATE 05/15/90

2. (PLANT) BROWNS FERRY NUCLEAR PLANT
P.O. BOX 2000
DECATUR, ALABAMA

SHEET [a] 1 OF 1

MR# 163527

3. WORK PERFORMED BY: T.V.A.
COMPANY

TYPE CODE SYMBOL STAMP [b] N/A

P.O. BOX 2000
ADDRESS

AUTHORIZATION NO. [b] N/A

DECATUR, ALABAMA
CITY AND STATE

EXPIRATION DATE [b] N/A

4. IDENTIFICATION OF SYSTEM SYSTEM 75 - CORE SPRAY

5(A). APPLICATION CONSTRUCTION CODE USAS B31.1.0 19 67
EDITION THRU ADDENDA N/A CODE CASE N/A

5(B). APPLICATION EDITION OF SECTION XI UTILIZED FOR REPAIRS OR REPLACEMENTS: 1980

6(A). NAME OF COMPONENT(S) AND DESCRIPTION (INCLUDE SIZE, CAPACITY, MATERIAL, AND LOCATION AS NEEDED TO AID IN IDENTIFICATION)
CORE SPRAY, H-3, 1A-LINE, EL-593, RX BLDG. NW WALL
PQ-LINE, R-12 & R-13, 2-HGR-75-H-3

6(B). NAME OF MANUFACTURER TVA
ADDRESS OF MANUFACTURER (IF KNOWN) PO BOX 2000, DECATUR ALA

6(c). MANUFACTURER'S SERIAL NUMBER N/A

6(D). NATIONAL BOARD NUMBER (IF APPLICABLE) N/A

6(E). OTHER IDENTIFICATION (SUBASSEMBLY NUMBER, HEAT NUMBER, ETC.) WP# 2154-84

6(F). YEAR BUILT N/A CODE CLASS ☐ 1 ☒ 2

6(G). REPAIRED ☐ REPLACED ☒ [c] REPLACEMENT ☐ [d]

6(H). ASME CODE STAMPED YES ☐ NO ☒

7. BRIEF DESCRIPTION OF REPAIR OR REPLACEMENT WORK PERFORMED
REMOVE U BOLT, AND ADD NEW U-BOLT AND TWO NUTS

8. TESTS CONDUCTED: HYDROSTATIC ☐ PNEUMATIC ☐
NOMINAL OPERATING PRESSURE ☐ OTHER ☐
PRESSURE N/A PSI TEST TEMPERATURE N/A F°

9. REMARKS:

( ) APPLICABLE MANUFACTURERS DATA REPORT [e] TO BE ATTACHED.

RESPONSIBLE ENGR. RW AYCOCK / SYSTEMS DATE 05/15/90
ORGANIZATION

ANII *R. Russell DATE 5-19-90

*. REFERENCE CAQR# CHA 890003713

[a] SHEET NOS. FILLED IN BY TESTING AND DIAGNOSTIC PROGRAMS BRANCH.
[b] FOR WORK PERFORMED BY CERTIFICATE HOLDER
[c] REPLACED (LIKE OR EQUIVALENT).
[d] REPLACEMENT (MODIFICATION).
[e] WHEN REQUIRED BY CONSTRUCTION CODE.

RETENTION PERIOD: LIFETIME RESPONSIBLE ORGANIZATION: NM-PROCESSES/SPECIAL PROGRAMS

Tennessee Valley Authority
Browns Ferry Nuclear Plant

Form 164
BF 17.8
Page 4 Of 5
AUG 0 7 1985

SHEET 34 of 255

ASME SECTION XI SUMMARY REPORT

*Tennessee Valley Authority
*Office of Nuclear Power, 1750 CST2-C
*Browns Ferry Nuclear Plant Unit 2
*P.O. Box 2000
*Decatur, Alabama

Comm. Service Date 3-1-75
System CS
TVA Class II
Workplan (MR No.) A163534

Furnish the following for the repair or replacement for the as-left condition of the component (after field work is complete). Mark all blanks (indicate NA for items which do not apply).

National Board Number of repaired or replaced component: NA

Name of the components and description (include size, capacity, material, and location)—These requirements may be satisfied by attaching an applicable drawing.
Existing core spray support R-15A (Dwg 47B458-424 R1)

Name of Manufacturer: NA

Address of Manufacturer (if known): NA

Manufacturer's component identification numbers (i.e., serial number, subassembly number, heat number). If more than one component is replaced, attach weld map and identify items by item number. NA

Brief description of repair or replacement work performed, including conditions observed and corrective measures taken, as applicable (reference DCR, CAR, etc.; drawing may be attached with attached affected area circled): Build-up weld where CS attaches to base plate

Brief description of post repair or replacement tests and examintaions (if required) by instruction or procedure number. NA

ANII/ANI name, employer, and business address [illegible]

Date work completed N/A

[illegible] 1/7/85
Cognizant Engineer Date

Retention: Period - Lifetime, Responsibility - Modifications Supervisor

*Revision

0510%

058

SHEET 35 of 255

Tennessee Valley Authority
Browns Ferry Nuclear Plant

Form 164
BF 17.8
Page 4 of 5
AUG 0 7 1985

ASME SECTION XI SUMMARY REPORT

Tennessee Valley Authority
Office of Nuclear Power, 1750 CST2-C
Browns Ferry Nuclear Plant Unit 2
P.O. Box 2000
Decatur, Alabama

Comm. Service Date March 1, 1975
System Core Spray
TVA Class II
Workplan/MR No. A-143537

Furnish the following for the repair or replacement for the as-left condition of the component (after field work is complete). Mark all blanks (indicate NA for items which do not apply).

National Board Number of repaired or replaced component. NA

Name of the components and description (include size, capacity, material, and location). These requirements may be satisfied by attaching an applicable drawing.
Existing 14" pipe support R-3
Dwg 478458-410 R0

Name of Manufacturer NA

Address of Manufacturer (if known) NA

Manufacturer's component identification numbers (i.e., serial number, subassembly number, heat number). If more than one component is replaced, attach weld map and identify items by item number. Existing

Brief description of repair or replacement work performed, including conditions observed and corrective measures taken, as applicable (reference DCN, CAR, etc.; drawing may be attached with attached affected area circled): Built up weld on bars 1 X 3/4 X 0'-1 3/8" that welds to pipe lugs. See Dwg. 478458-410 R0.

Brief description of post repair or replacement tests and examintaions (if required) by instruction or procedure number. N-VT-2

AMII/AMI name, employer, and business address Roosevelt Russell AMI, Bill Rice AMII
Hartford Steam & Boiler Insp. & Ins. Co.
4330 Georgetown Sq, Atlanta, GA 30338

Date work completed 9-15-85

[signature] 9-15-85
Cognizant Engineer Date

Retention: Period - Lifetime, Responsibility - Modifications Supervisor

Revision

Drill

ASME SECTION XI [illegible]

Plant BFN1
System 68
TVA Class 1
~~Work Order~~ No. A-163554

Furnish the following for the repair or replacement for the as-left condition of the component (after field work is complete). Mark all blanks (indicate NA for items which do not apply).

National Board Number of repaired or replaced component. NA

Name of the components and description (include size, capacity, material, and location)--These requirements may be satisfied by attaching an applicable drawing. Pipe metal, pipe repair, near weld 68 51-2-51, DWG CHM-2068-C

Name of Manufacturer Tom [illegible] NA

Address of Manufacturer (if known) NA

Manufacturer's component identification numbers (i.e., serial number, subassembly number, heat number). If more than one component is replaced, attach weld map and identify items by item number. See DWG.

Brief description of repair or replacement work performed, including conditions observed and corrective measures taken, as applicable (reference DCR, CAR, etc.; drawings may be attached with affected area circled). Ground and [illegible], no [illegible] repair required

Brief description of post repair or replacement tests and examinations (if required) instruction or procedure number. NI-PT-1

Name, employer, and business address Bill Rice/R Rennell - Hartford Steam Boiler Inspection and Insurance Co., 4330 Georgian Square, Atlanta, GA.

Date work completed 5/26/85

[signature] 5/28/85
Cognizant Engineer Date

[illegible] Lifetime Responsibility - Modifications Supervisor

Tennessee Valley Authority
Browns Ferry Nuclear Plant

Form No.
BF 1...
Page ...
SHEET 37 of 255

ASME SECTION XI SUMMARY REPORT

Plant BFNP
System 68
TVA Class 1
~~Workplan~~/HR No. ~~A-16~~ A-163555

Furnish the following for the repair or replacement for the as-left condition of the component (after field work is complete). Mark all blanks (indicate NA for items which do not apply).

National Board Number of repaired or replaced component. NA

Name of the components and description (include size, capacity, material, and location)--These requirements may be satisfied by attaching an applicable drawing. TVA WELD ; DWG ~~2068-5~~ 2068-C

Name of Manufacturer TVA CONSTRUCTION

Address of Manufacturer (if known) NA

Manufacturer's component identification numbers (i.e., serial number, subassembly number, heat number). If more than one component is replaced, attach weld map and identify items by item number. See Data

Brief description of repair or replacement work performed, including conditions causing and corrective measures taken, as applicable (reference DCR, CAR, etc.; drawings may be attached with affected area circled). Ground out defect in weld, no weld repair required

Brief description of post repair or replacement tests and examinations (if required) including procedure number. N-PT-1

NDE/ANI name, employer, and business address Bill Rice/R. Russell - Hartford Steam Boiler Inspection and Insurance Co., 4330 Georgetown Square Atlanta GA

Date completed 5-20-85

Gary T. McConnell 5-28-85
Cognizant Engineer Date

Retention Period - Lifetime, Responsibility - Modifications Supervisor

TENNESSEE VALLEY AUTHORITY
BROWNS FERRY NUCLEAR PLANT
SITE DIRECTOR STANDARD PRACTICE

SEP 22 1989

FORM SDSP-403
FORM NIS-2 ATTACHMENT

1. (OWNER) TENNESSEE VALLEY AUTHORITY
NUCLEAR POWER

DATE 5-16-91

2. (PLANT) BROWNS FERRY NUCLEAR PLANT
P.O. BOX 2000
DECATUR, ALABAMA

SHEET [a] 38 OF 255

3. WORK PERFORMED BY: TVA
COMPANY

TYPE CODE SYMBOL STAMP [b] NA

P.O. Box 2000
ADDRESS

AUTHORIZATION NO. [b] NA

DECATUR, AL 35609-2000
CITY AND STATE

EXPIRATION DATE [b] NA

4. IDENTIFICATION OF SYSTEM 68, REACTOR WATER RECIRCULATION SYSTEM

5(A). APPLICATION CONSTRUCTION CODE ANSI B31.1 19 67
EDITION 1967 ADDENDA WINTER CODE CASE NA

5(B). APPLICATION EDITION OF SECTION XI UTILIZED FOR REPAIRS OR REPLACEMENTS: 1980

6(A). NAME OF COMPONENT(S) AND DESCRIPTION (INCLUDE SIZE, CAPACITY, MATERIAL, AND LOCATION AS NEEDED TO AID IN IDENTIFICATION)
2-HCV-068-0232

6(B). NAME OF MANUFACTURER HANCOCK MFG CO.
ADDRESS OF MANUFACTURER (IF KNOWN) NA

6(c). MANUFACTURER'S SERIAL NUMBER NA

6(D). NATIONAL BOARD NUMBER (IF APPLICABLE) NA

6(E). OTHER IDENTIFICATION (SUBASSEMBLY NUMBER, HEAT NUMBER, ETC.) MODEL 15500W

6(F). YEAR BUILT NA CODE CLASS ☒ 1 ☐ 2

6(G). REPAIRED ☒ REPLACED ☐ [c] REPLACEMENT ☐ [d]

6(H). ASME CODE STAMPED YES ☐ NO ☒

7. BRIEF DESCRIPTION OF REPAIR OR REPLACEMENT WORK PERFORMED.
REMOVED INDICATION BY GRINDING, INSIGNIFICANT AMOUNT OF METAL REMOVED, NO WELDING REQUIRED.

8. TESTS CONDUCTED: HYDROSTATIC ☐ PNEUMATIC ☐
NOMINAL OPERATING PRESSURE ☐ OTHER ☐
PRESSURE NA PSI TEST TEMPERATURE NA F°

9. REMARKS: MR# 163556

( ) APPLICABLE MANUFACTURERS DATA REPORT [e] TO BE ATTACHED.

RESPONSIBLE ENGR * Albert E Cooke / Mech Maint DATE 5/16/91
ORGANIZATION

ANII * DATE

* REF CAQR # CHA 890003713

[a] SHEET NOS. FILLED IN BY TESTING AND DIAGNOSTIC PROGRAMS BRANCH.
[b] FOR WORK PERFORMED BY CERTIFICATE HOLDER
[c] REPLACED (LIKE OR EQUIVALENT).
[d] REPLACEMENT (MODIFICATION).
[e] WHEN REQUIRED BY CONSTRUCTION CODE.

RETENTION PERIOD: LIFETIME RESPONSIBLE ORGANIZATION: NM-PROCESSES/SPECIAL PROGRAMS

Tennessee Valley Authority
Browns Ferry Nuclear Plant

Form 164
BF 17.8
Page 4 of 5
MAR 1 9 1986
SHEET 39 of 255

ASME SECTION XI SUMMARY REPORT

Plant BFNP
System 68
TVA Class 1
~~Workplan~~/MR No. A-163557

Furnish the following for the repair or replacement for the as-left condition of the component (after field work is complete). Mark all blanks (indicate NA for items which do not apply).

National Board Number of repaired or replaced component. NA

Name of the components and description (include size, capacity, material, and location)--These requirements may be satisfied by attaching an applicable drawing.
6-25-85 MT LINEAR INDICATIONS ON SIDE OF VALVE 2-68-79 NEAR WELD 68 151-2-71, SEE DWG. CHM 2086-C

Name of Manufacturer TVA CONSTRUCTION

Address of Manufacturer (if known) NA

Manufacturer's component identification numbers (i.e., serial number, subassembly number, heat number). If more than one component is replaced, attach weld map and identify items by item number. See DWG

Brief description of repair or replacement work performed, including conditions observed and corrective measures taken, as applicable (reference DCR, CAR, etc.; drawing may be attached with affected area circled). Ground out indications, No weld repairs required.

Brief description of post repair or replacement tests and examinations (if required) by instruction or procedure number. NDT-1, N-VT-2

ANII/ANI name, employer, and business address Bill Rice / R. Russell Hartford Steam Boiler, Atlanta GA

Date work completed 6-25-85

Gary T. McCormell / 6-25-85
Cognizant Engineer Date

Retention: Period - Lifetime, Responsibility - Modifications Supervisor

Tennessee Valley Authority
Browns Ferry Nuclear Plant

Form 1[illegible]
[illegible]
[illegible]
[illegible]

ASME SECTION XI SUMMARY REPORT

SHEET 40 of 255

Plant BFNP
System ~~63~~ 68 ~~44~~ 5/1/65
TVA Class ~~[illegible]~~ 1
~~Discipline~~/MR No. A-163559

[illegible] the following for the repair or replacement for the as-left condition of the component (after field work is complete). Mark all blanks (indicate N/A for items which do not apply).

National Board Number of repaired or replaced component. NA

Name of the components and description (include size, capacity, material, and location)--these requirements may be satisfied by attaching an applicable drawing. 1" DRAINLINE VALVE, 2-68-231, INDICATION NEAR WELD NO. 68 151-2-10, DWG CHM 2065-C

Name of Manufacturer NA

Address of Manufacturer (if known)

Manufacturer's component identification numbers (i.e., serial number, subassembly number, heat number). If more than one component is replaced, attach weld map and identify items by item number. See DWG.

Brief description of repair or replacement work performed, including conditions observed and corrective measures taken, as applicable (reference DCR, CAR, etc.; drawing may be attached with affected area circled). GROUND OUT INDICATION, NO SIGNIFICANT ~~[illegible]~~ METAL REMOVED, WELD REPAIR OF EXCAVATION NOT 6-5-55 REQUIRED.

Brief description of post repair or replacement tests and examinations (if required) by instruction or procedure number. N-PT-1

Welder's name, employer, and business address. Bill Rice/R. Russell Hartford Sutton Boiler Inspection & Insurance Co., 1330 Georgetown Square, Atlanta, GA.

Work completed 5-20-55

Gary F. McCowell : 6-5-55
Cognizant Engineer Date

[illegible] Period - Lifetime, Responsibility - Modifications Supervisor

0014728 2 0 2

Tennessee Valley Authority
Browns Ferry Nuclear Plant

Form 9.4
Rev 1
Page 1 of 1
Rev 1 [illegible]

SHEET 41 of 255

ASME SECTION XI SUMMARY REPORT

Plant BFNP
System 63 68
TVA C[illegible] 1
~~Inspection No.~~ A-163560

Furnish the following for the repair or replacement for the as-built condition of the component (after field work is complete). Mark all blanks (indicate NA for items which do not apply).

National Board Number of repaired or replaced component. NA

Name of the components and description (include size, capacity, material, and location)--These requirements may be satisfied by attaching an applicable drawing. 1" INCH VALVE 2-68-232, INDICATION NEAR WELD No. 83 151-2-10, DWG CRM 2065-E

Name of Manufacturer NA

Address of Manufacturer (if known) NA

Manufacturer's component identification numbers (i.e., serial number, subassembly number, heat number). If more than one component is replaced, attach weld map and identify items by item number. See DWG.

Brief description of repair or replacement work performed, including conditions observed and corrective measures taken, as applicable (reference DCR, CAR, etc.; drawing may be attached with affected area circled). GROUND OUT INDICATION NO SIGNIFICANT ~~WELD~~ METAL REMOVED, NO WELD REPAIR REQUIRED. CRM 2065

Brief description of post repair or replacement tests and examinations (if required by instruction or procedure number. N-PT-1

ANII/ANI name, employer, and business address Bill Rice/R. Rowell Hartford Steam Boiler Inspection & Insurance Co., 4330 Georgetown Square, Atlanta GA

Date work completed 5-20-85

[illegible] 6-5-85
Cognizant Engineer Date

Distribution: Permanent - Lifetime, Responsibility - Modifications Supervisor

0014270937

Tennessee Valley Authority
Browns Ferry Nuclear Plant

Form 164
BF 18.8

MAY 8 1984
SHEET 42 of 255

ASME SECTION XI SUMMARY REPORT

Plant BFNP
System RHR
TVA Class II
Workplan/(MR No.) A-163928

Furnish the following for the repair or replacement for the "as left" condition of the component (after field work is complete). Mark all blanks (indicate N/A for items which do not apply).

National Board Number of repaired or replaced component NA

Name of the components and description (include size, capacity, material, and location)--These requirements may be satisfied by attaching an applicable drawing
18" RHR pipe XS A-106 C.S. Top Torus Bay 3

Name of Manufacturer Existing Pipe

Address of Manufacturer (if known) NA

Manufacturer's component identification numbers (i.e., serial number, subassembly number, heat number, etc.) If more than one component is replaced, attach weld map and identify items by item number. ~~Welding Rod~~ - JR 4-17-85 NA

Brief description of repair or replacement work performed, including conditions observed and corrective measures taken, as applicable (Reference DCR, CAR, etc., drawing may be attached with affected area circled). Ground out burned area measured depth of defect & MT'ed excavation. It did not exceed minimum wall therefore no more corrective action was needed

Brief description of post repair or replacement tests and examinations (if required) by instruction or procedure number N-VT-3, N-MT-1

ANI/ANII name, employer, and business address Roosevelt Russel / Bill Rice
The Hartford Steam & Boiler Inspection & Ins. Co.

Date work completed 4-16-85

J Rosenblum 4-17-85
Cognizant Engineer Date

Retention: Period - Lifetime, Responsibility - OMMM Supervisor

Tennessee Valley Authority
Browns Ferry Nuclear Plant

Form 164
BF 17.8
Page 4 of 5
MAR 19 1985

ASME SECTION XI SUMMARY REPORT

SHEET 43 of 255

Plant BFNP UNIT 2
System RHR
TVA Class E
Workplan (WR No) A-163929

Furnish the following for the repair or replacement for the as-left condition of the component (after field work is complete). Mark all blanks (indicate NA for items which do not apply).

National Board Number of repaired or replaced component. NA

Name of the components and description (include size, capacity, material, and location). These requirements may be satisfied by attaching an applicable drawing. Hanger on 6" RHR line R105 (drwg attached) replaced 4" cover plates.

Name of Manufacturer Paragon Steel

Address of Manufacturer (if known) Detroit, Michigan

Manufacturer's component identification numbers (i.e., serial number, subassembly number, heat number). If more than one component is replaced, attach weld map and identify items by item number. HF 395337

Brief description of repair or replacement work performed, including conditions observed and corrective measures taken, as applicable (reference DCR, CAR, etc.; drawing may be attached with affected area circled). Cover plates on 4x4 T.S. were installed incorrectly so cut them off & installed new ones

Brief description of post repair or replacement tests and examinations (if required) by instruction or procedure number. N-VT-2; MAT-23

ANII/AHI name, employer, and business address Roosevelt Russel
Hartford Steam & Boiler Insp. Co.
Atlanta, GA 30338

Date work completed 5-1-85

J Kaenblum 5-1-85
Cognizant Engineer Date

Retention: Period - Lifetime, Responsibility - Modifications Supervisor

Tennessee Valley Authority
Bronws Ferry Nuclear Plant

Form 164
BF 17.8
Page 4 Of 5
AUG 0 7 1985

ASME SECTION XI SUMMARY REPORT

SHEET 44 of 255

*Tennessee Valley Authority
*Office of Nuclear Power, 1750 CST2-C
*Browns Ferry Nuclear Plant Unit 2
*P.O. Box 2000
*Decatur, Alabama

Comm. Service Date 1974
System RWCU
TVA Class 1
Workplan/MR No. A-164523

Furnish the following for the repair or replacement for the as-left condition of the component (after field work is complete). Mark all blanks (indicate NA for items which do not apply).

National Board Number of repaired or replaced component. N/A

Name of the components and description (include size, capacity, material, and location)--These requirements may be satisfied by attaching an applicable drawing.
4" Velan pressure seal 900 Lb. gate Valve - Manual.

Name of Manufacturer Velan

Address of Manufacturer (if known) PLATTSBURGH, New York

Manufacturer's component identification numbers (i.e., serial number, subassembly number, heat number). If more than one component is replaced, attach weld map and identify items by item number. Pressure seal ring replaced Velan P/N-21 of Dwg. P33160-11, TVA TIIC # ADJ 319L, 575# 5686-00564

Brief description of repair or replacement work performed, including conditions observed and corrective measures taken, as applicable (reference DCR, CAR, etc.; drawing may be attached with attached affected area circled). Valve disassembled to replace seal ring which was leaking. Valve is a pressure seal design.

Brief description of post repair or replacement tests and examintaions (if required). by instruction or procedure number. Hydro performed that verified pressure seal did not leak. per MR A164545

ANII/ANI name, employer, and business address Roosevelt Russell, Jr. Hartford Steam Boiler Inspection and Insurance Co. 1117 Perimeter Center West, Suite E-301 Atlanta, Ga., 30338

Date work completed 4-27-87

C. W. Pratt / 1-26-88
Cognizant Engineer Date

Retention: Period - Lifetime, Responsibility - Modifications Supervisor

*Revision

0510K

MR-A-164545 Attachment
SAT 13 of 46

Tennessee Valley Authority
Browns Ferry Nuclear Plant

Form 164
BF 17.8
Page 4 Of 5
AUG 0 7 1985

SHEET 45 of 255

ASME SECTION XI SUMMARY REPORT

*Tennessee Valley Authority
*Office of Nuclear Power, 1750 CST2-C
Browns Ferry Nuclear Plant Unit 2
*P.O. Box 2000
*Decatur, Alabama

Comm. Service Date 1974
System Reactor Water Cleanup
TVA Class B
Workplan/MR NO. A-164545

Furnish the following for the repair or replacement for the as-left condition of the component (after field work is complete). Mark all blanks (indicate NA for items which do not apply).

National Board Number of repaired or replaced component. N/A

Name of the components and description (include size, capacity, material, and location)--These requirements may be satisfied by attaching an applicable drawing.
4" Pressure Seal Swing Check Valve, disc Carbon Steel, A216 WCB with Stellite 6 hard facing.

Name of Manufacturer Velan

Address of Manufacturer (if known) Plattsburg, New York

Manufacturer's component identification numbers (i.e., serial number, subassembly number, heat number). If more than one component is replaced, attach weld map and identify items by item number. Vendor Drawing No. P-35177-4 TVA Contract No. 90744 TVA Tag No. 2-CKV-69-579.

Brief description of repair or replacement work performed, including conditions observed and corrective measures taken, as applicable (reference DCR, CAR, etc.; drawing may be attached with attached affected area circled). Valve cut out of line, Cut out backweld on Seat, and Replace seat with New one, Reinstalled Valve in line and Verify orientation is Correct

Brief description of post repair or replacement tests and examintaions (if required) by instruction or procedure number. SI 47.A.2.g-3, SI 3.3.1.a

ANII/ANI name, employer, and business address Roosevelt Russell, Jr. Hartford Steam Boiler Inspection and Insurance Co., 1117 Perimeter Center West, Suite E301, Atlanta, Ga. 30338

Date work completed 11-20-87

Albert E. Cooke / 11-20-87
Cognizant Engineer Date

Retention: Period - Lifetime, Responsibility - Modifications Supervisor

*Revision

0510K

MR# A-164548 Attachment SHT 4 of

Tennessee Valley Authority
Bronws Ferry Nuclear Plant

Form 164
BF 17.8
Page 4 Of 5
AUG 0 7 1985 SHEET 46 of 255

ASME SECTION XI SUMMARY REPORT

*Tennessee Valley Authority
*Office of Nuclear Power, 1750 CST2-C
*Browns Ferry Nuclear Plant Unit 2
*P.O. Box 2000
*Decatur, Alabama

Comm. Service Date 1975
System HPCI
TVA Class 2
Workplan/(MR) No. A-164548

Furnish the following for the repair or replacement for the as-left condition of the component (after field work is complete). Mark all blanks (indicate NA for items which do not apply).

National Board Number of repaired or replaced component. N/A

Name of the components and description (include size, capacity, material, and location)--These requirements may be satisfied by attaching an applicable drawing.
2" HCV 73-24 Stop Check Globe Valve

Name of Manufacturer Velan MFG. Montreal Canada

Address of Manufacturer (if known) Montreal Canada

Manufacturer's component identification numbers (i.e., serial number, subassembly number, heat number). If more than one component is replaced, attach weld map and identify items by item number. P-33160-8
66C60-90744 Contract

Brief description of repair or replacement work performed, including conditions observed and corrective measures taken, as applicable (reference DCR, CAR, etc.; drawing may be attached with attached affected area circled). Weld build-up valve bonnet to allow for seal ring groove machining

Brief description of post repair or replacement tests and examintaions (if required) by instruction or procedure number. PT & VT N-PT-1
N-VT-3

ANII/ANI name, employer, and business address Roosevelt Russell/Bill Rice, Hartford Boiler. THE HARTFORD STEAM BOILER INSPECTION AND INSURANCE CO., ATLANTA, GA.

Date work completed 9-23-85

Robert L Lehrman 12-24-86
Cognizant Engineer Date

Retention: Period - Lifetime, Responsibility - Modifications Supervisor

*Revision

0510K

Tennessee Valley Authority
Browns Ferry Nuclear Plant

Form 164
BF 17.8
Page 4 of 5
MAR 19 1985

SHEET 47 of 255

ASME SECTION XI SUMMARY REPORT

Plant BFNP (UNIT 2)
System 74
TVA Class A
~~Workplan~~/MR No. A-165076

Furnish the following for the repair or replacement for the as-left condition of the component (after field work is complete). Mark all blanks (indicate NA for items which do not apply).

National Board Number of repaired or replaced component. NA

Name of the components and description (include size, capacity, material, and location)--These requirements may be satisfied by attaching an applicable drawing. TVA weld; Dwg. CHM-2070-C; Weld # 74(S1-2-31

Name of Manufacturer TVA construction

Address of Manufacturer (if known) NA

Manufacturer's component identification numbers (i.e., serial number, subassembly number, heat number). If more than one component is replaced, attach weld map and identify items by item number. See Dwg

Brief description of repair or replacement work performed, including conditions observed and corrective measures taken, as applicable (reference DCR, CAR, etc.; drawing may be attached with affected area circled). Ground out linear indications, No repair welding required

Brief description of post repair or replacement tests and examinations (if required) by instruction or procedure number. N-PT-1, N-VT-3

ANII/ANI name, employer, and business address B. Rice / R. Russell
Hartford Steam Boiler Inspection & Insurance Co., 4330 Georgetown Square, Atlanta GA

Date work completed 6-13-85

Gary F. McCormell / 9-14-85
Cognizant Engineer Date

Retention: Period - Lifetime, Responsibility - Modifications Supervisor

Tennessee Valley Authority
Browns Ferry Nuclear Plant

Form 164
BF 17.8
Page 4 of 5
MAR 19 1985
SHEET 48 of 255

ASME SECTION XI SUMMARY REPORT

Plant BFNP (UNIT 2)
System 74
TVA Class A
~~Workplan~~/MR No. A-165077

Furnish the following for the repair or replacement for the as-left condition of the component (after field work is complete). Mark all blanks (indicate NA for items which do not apply).

National Board Number of repaired or replaced component. NA

Name of the components and description (include size, capacity, material, and location)--These requirements may be satisfied by attaching an applicable drawing.
TVA weld; Dwg. CHM-2070-C; Weld# 74151-2-100

Name of Manufacturer TVA Construction

Address of Manufacturer (if known) NA

Manufacturer's component identification numbers (i.e., serial number, subassembly number, heat number). If more than one component is replaced, attach weld map and identify items by item number. See Dwg

Brief description of repair or replacement work performed, including conditions observed and corrective measures taken, as applicable (reference DCR, CAR, etc.; drawing may be attached with affected area circled). Pipe section was replaced on MR A-554712

Brief description of post repair or replacement tests and examinations (if required) by instruction or procedure number. N-PT-1; N-VT-3

ANII/ANI name, employer, and business address Bill Ried R. Russell Northwest Steam Boiler Inspection & Insurance Co., 4330 Georgetown Square, Atlanta GA.

Date work completed 6-5-85

Gary F. McConnell / 6-10-85
Cognizant Engineer Date

Retention: Period - Lifetime, Responsibility - Modifications Supervisor

Tennessee Valley Authority
Browns Ferry Nuclear Plant

Form 164
BF 17.8
Page 4 of 5
MAR 19 1985
SHEET 49 of 255

ASME SECTION XI SUMMARY REPORT

Plant BFNP (UNIT 2)
System 74
TVA Class A
~~Workplan~~/MR No. A-165078

Furnish the following for the repair or replacement for the as-left condition of the component (after field work is complete). Mark all blanks (indicate NA for items which do not apply).

National Board Number of repaired or replaced component. NA

Name of the components and description (include size, capacity, material, and location)--These requirements may be satisfied by attaching an applicable drawing.
TVA weld; Dwg CHM-2070-C, 74 151-2-27

Name of Manufacturer TVA Construction

Address of Manufacturer (if known) NA

Manufacturer's component identification numbers (i.e., serial number, subassembly number, heat number). If more than one component is replaced, attach weld map and identify items by item number. See Dwg.

Brief description of repair or replacement work performed, including conditions observed and corrective measures taken, as applicable (reference DCR, CAR, etc.; drawing may be attached with affected area circled). Ground cut indication, No weld repair required.

Brief description of post repair or replacement tests and examinations (if required) by instruction or procedure number. N-PT-1003 & N-VT-3

ANII/ANI name, employer, and business address Bill Rice/R. Russell Hartford Steam Boiler Inspection & Insurance Co., 4330 Georgetown Square, Atlanta GA

Date work completed 5-30-85

Gary F. McCormell 6-19-85
Cognizant Engineer Date

Retention: Period - Lifetime, Responsibility - Modifications Supervisor

Tennessee Valley Authority
Browns Ferry Nuclear Plant

Form 164
BF 17.8
Page 4 of 5
MAR 19 1985

SHEET 50 of 255

ASME SECTION XI SUMMARY REPORT

Plant BFNP (UNIT 2)
System 74
TVA Class A
~~Workplan~~/MR No. A-165079

Furnish the following for the repair or replacement for the as-left condition of the component (after field work is complete). Mark all blanks (indicate NA for items which do not apply).

National Board Number of repaired or replaced component. NA

Name of the components and description (include size, capacity, material, and location)--These requirements may be satisfied by attaching an applicable drawing.
TVA weld; CHM-2070-C; Weld # 74151-2-99

Name of Manufacturer TVA Construction

Address of Manufacturer (if known) NA

Manufacturer's component identification numbers (i.e., serial number, subassembly number, heat number). If more than one component is replaced, attach weld map and identify items by item number. See Dwg.

Brief description of repair or replacement work performed, including conditions observed and corrective measures taken, as applicable (reference DCR, CAR, etc.; drawing may be attached with affected area circled). GROUND OUT INDICATIONS, NO WELD REPAIR REQUIRED

Brief description of post repair or replacement tests and examinations (if required) by instruction or procedure number. N-UT-3, N-PT-1 & 3

ANII/ANI name, employer, and business address Bill Rice / R. Russell Hartford Steam Boiler Inspection & Insurance Co., 4330 Georgetown Square, Atlanta GA

Date work completed 5-30-85

Gary F. McCormell / 6/19/85
Cognizant Engineer Date

Retention: Period - Lifetime, Responsibility - Modifications Supervisor

Tennessee Valley Authority
Browns Ferry Nuclear Plant

Form 164
BF 17.8
Page 4 of 5
MAR 19 1985

ASME SECTION XI SUMMARY REPORT

SHEET 51 of 255

Plant BFNP
System 74 (unit 2)
TVA Class A
~~Workplan~~/MR No. A-165080

Furnish the following for the repair or replacement for the as-left condition of the component (after field work is complete). Mark all blanks (indicate NA for items which do not apply).

National Board Number of repaired or replaced component. NA

Name of the components and description (include size, capacity, material, and location)--These requirements may be satisfied by attaching an applicable drawing.
TVA Weld ; Dwg. CAM-2070-C ; Weld # 74151-2-107

Name of Manufacturer TVA Construction

Address of Manufacturer (if known) NA

Manufacturer's component identification numbers (i.e., serial number, subassembly number, heat number). If more than one component is replaced, attach weld map and identify items by item number. See dwg

Brief description of repair or replacement work performed, including conditions observed and corrective measures taken, as applicable (reference DCR, CAR, etc.; drawing may be attached with affected area circled). Ground out defect, No weld repair required

Brief description of post repair or replacement tests and examinations (if required) by instruction or procedure number. N-PT-1

ANII/ANI name, employer, and business address Bill Rice/R. Purnell - Hartford Steam Boiler Insurance and Inspection Co., 4330 Georgetown Square, Atlanta GA

Date work completed 5-30-85

Gary T. McCarnell / 6-1-85
Cognizant Engineer Date

Retention: Period - Lifetime, Responsibility - Modifications Supervisor

Tennessee Valley Authority
Browns Ferry Nuclear Plant

Form 164
BF 17.8
Page 4 of 5
MAR 1 9 1986

ASME SECTION XI SUMMARY REPORT

SHEET 52 of 255

Plant BFNP (Unit 2)
System 74
TVA Class A
~~Workplan~~/MR No. A-165081

Furnish the following for the repair or replacement for the as-left condition of the component (after field work is complete). Mark all blanks (indicate NA for items which do not apply).

National Board Number of repaired or replaced component. NA

Name of the components and description (include size, capacity, material, and location)--These requirements may be satisfied by attaching an applicable drawing. TVA weld; Dwg CHM-2070-C; weld # 74151-2-26

Name of Manufacturer TVA Construction

Address of Manufacturer (if known) NA

Manufacturer's component identification numbers (i.e., serial number, subassembly number, heat number). If more than one component is replaced, attach weld map and identify items by item number. See Dwg.

Brief description of repair or replacement work performed, including conditions observed and corrective measures taken, as applicable (reference DCR, CAR, etc.; drawing may be attached with affected area circled). Grind and evaluate, No weld repair required

Brief description of post repair or replacement tests and examinations (if required) by instruction or procedure number. N-PT-1; N-VT-3

ANII/ANI name, employer, and business address Bill Rice/R. Russell Hartford Steam Boiler Inspection and Insurance Co., 4330 Georgetown Square Atlanta GA

Date work completed 5/22/85

Greg McConnell 5-28-85
Cognizant Engineer Date

Retention: Period - Lifetime, Responsibility - Modifications Supervisor

0014279 47

Tennessee Valley Authority
Browns Ferry Nuclear Plant

Form 164
BF 17.8
Page 4 of 5
MAR 19 1985

ASME SECTION XI SUMMARY REPORT

SHEET 53 of 255

Plant BFNP (Unit 2)
System 75
TVA Class A
~~Workplan~~/MR No. A-165082

Furnish the following for the repair or replacement for the as-left condition of the component (after field work is complete). Mark all blanks (indicate NA for items which do not apply).

National Board Number of repaired or replaced component. NA

Name of the components and description (include size, capacity, material, and location)--These requirements may be satisfied by attaching an applicable drawing.
TVA weld; Dwg CHM-2071-C; weld # 75151-2-8

Name of Manufacturer TVA Construction

Address of Manufacturer (if known) NA

Manufacturer's component identification numbers (i.e., serial number, subassembly number, heat number). If more than one component is replaced, attach weld map and identify items by item number. See Dwg.

Brief description of repair or replacement work performed, including conditions observed and corrective measures taken, as applicable (reference DCR, CAR, etc.; drawing may be attached with affected area circled). Ground out indication, No repair welding required

Brief description of post repair or replacement tests and examinations (if required) by instruction or procedure number. N-VT-3, N-PT-1

ANII/ANI name, employer, and business address B. Reed/R. Rowell
Hartford Steam Boiler Inspection & Insurance Co., 4330 Georgetown Square, Atlanta GA

Date work completed 6-28-85

Gary T. McConnell / 9-14-85
Cognizant Engineer Date

Retention: Period - Lifetime, Responsibility - Modifications Supervisor

Tennessee Valley Authority
Browns Ferry Nuclear Plant

Form 164
BF 17.8
Page 4 of 5
MAR 1 9 1986

SHEET 54 of 255

ASME SECTION XI SUMMARY REPORT

Plant BFNP (Unit 2)
System 3
TVA Class A
~~Workplan~~/MR No. A-165084

Furnish the following for the repair or replacement for the as-left condition of the component (after field work is complete). Mark all blanks (indicate NA for items which do not apply).

National Board Number of repaired or replaced component. NA

Name of the components and description (include size, capacity, material, and location)--These requirements may be satisfied by attaching an applicable drawing.
TVA weld, Dwg. CHM 2081-C, Weld # 3151-2-8

Name of Manufacturer TVA

Address of Manufacturer (if known) NA

Manufacturer's component identification numbers (i.e., serial number, subassembly number, heat number). If more than one component is replaced, attach weld map and identify items by item number. See DWG

Brief description of repair or replacement work performed, including conditions observed and corrective measures taken, as applicable (reference DCR, CAR, etc.; drawing may be attached with affected area circled). INDICATION REMOVED BY GRINDING, WELD REPAIR PER MMI-1324 GT-11-0-1A.

Brief description of post repair or replacement tests and examinations (if required) by instruction or procedure number. N-VT-3, N-PT-1

ANII/ANI name, employer, and business address Bill Rice/R. Russell Hartford Steam Boiler Inspection and Insurance Co., 4330 Georgetown Square, Atlanta GA

Date work completed 9-27-85

[signature] 12-4-85
Cognizant Engineer Date

Retention: Period - Lifetime, Responsibility - Modifications Supervisor

Tennessee Valley Authority
Browns Ferry Nuclear Plant

Form 164
BF 17.8
Page 4 of 5
MAR 1 9 1985

ASME SECTION XI SUMMARY REPORT

SHEET 55 of 255

Plant BFNP (UNIT 2)
System 75
TVA Class A
~~Workplan~~/MR No. A-165090

Furnish the following for the repair or replacement for the as-left condition of the component (after field work is complete). Mark all blanks (indicate NA for items which do not apply).

National Board Number of repaired or replaced component. NA

Name of the components and description (include size, capacity, material, and location)--These requirements may be satisfied by attaching an applicable drawing. TVA weld, See dwg. CHM 2071-C, Weld # 75151-2-45

Name of Manufacturer TVA

Address of Manufacturer (if known) NA

Manufacturer's component identification numbers (i.e., serial number, subassembly number, heat number). If more than one component is replaced, attach weld map and identify items by item number. NA

Brief description of repair or replacement work performed, including conditions observed and corrective measures taken, as applicable (reference DCR, CAR, etc.; drawing may be attached with affected area circled). Ground out indication. No weld repair 6-17-85 No repair welding required

Brief description of post repair or replacement tests and examinations (if required) by instruction or procedure number. N-PT-1, N-VT-3

ANII/ANI name, employer, and business address B. Rice / R. Russell Hartford Steam Boiler Inspection & Insurance Co., 4330 Georgetown Square, Atlanta, GA

Date work completed 6-17-85

Gary T. McTorrell / 9-14-85
Cognizant Engineer Date

Retention: Period - Lifetime, Responsibility - Modifications Supervisor

Tennessee Valley Authority
Browns Ferry Nuclear Plant

Form 164
BF 17.8
Page 4 of 5
MAR 1 9 1985

ASME SECTION XI SUMMARY REPORT

SHEET 56 of 255

Plant BFNP (UNIT 2)
System 3
TVA Class A
~~Workplan~~/MR No. 165126

Furnish the following for the repair or replacement for the as-left condition of the component (after field work is complete). Mark all blanks (indicate NA for items which do not apply).

National Board Number of repaired or replaced component. NA

Name of the components and description (include size, capacity, material, and location)--These requirements may be satisfied by attaching an applicable drawing.
TVA weld, See dwg CHM-2081-C, Weld # 3151-2-17

Name of Manufacturer TVA

Address of Manufacturer (if known) NA

Manufacturer's component identification numbers (i.e., serial number, subassembly number, heat number). If more than one component is replaced, attach weld map and identify items by item number. See dwg

Brief description of repair or replacement work performed, including conditions observed and corrective measures taken, as applicable (reference DCR, CAR, etc.; drawing may be attached with affected area circled). EXCAVATED POROSITY, REPAIR WELDED PER MMI-132 & GT11-0-1A

Brief description of post repair or replacement tests and examinations (if required) by instruction or procedure number. Excavation measured: 5/16" X 3/8" X 2" W.M. Hill 9/26/85
N-VT-3, N-PT-1

ANII/ANI name, employer, and business address BILL RICE/R. RUSSELL
HARTFORT STEAM BOILER INSURANCE CO., ATLANTA, GA

Date work completed 9-27-85

[signature] 12-4-85
Cognizant Engineer Date

Retention: Period - Lifetime, Responsibility - Modifications Supervisor

Tennessee Valley Authority
Browns Ferry Nuclear Plant

Form 164
BF 17.8
Page 4 of 5
MAR 1 9 1986
SHEET 57 of 255

ASME SECTION XI SUMMARY REPORT

Plant BFNP Unit 2
System 74
TVA Class A
~~Workplan~~/MR No. A-165128

Furnish the following for the repair or replacement for the as-left condition of the component (after field work is complete). Mark all blanks (indicate NA for items which do not apply).

National Board Number of repaired or replaced component. NA

Name of the components and description (include size, capacity, material, and location)--These requirements may be satisfied by attaching an applicable drawing.
TVA-Weld, Dwg. CHM-2070-C, Weld # 74151-2-13

Name of Manufacturer TVA

Address of Manufacturer (if known) NA

Manufacturer's component identification numbers (i.e., serial number, subassembly number, heat number). If more than one component is replaced, attach weld map and identify items by item number. See dwg.

Brief description of repair or replacement work performed, including conditions observed and corrective measures taken, as applicable (reference DCR, CAR, etc.; drawing may be attached with affected area circled). INDICATIONS REMOVED By ~~GE~~ 12/4/85 LIGHT GRINDING. NO SIGNIFICANT REMOVAL OF METAL

Brief description of post repair or replacement tests and examinations (if required) by instruction or procedure number. N-PT-1 & N-VT-3

ANII/ANI name, employer, and business address Bill Rice / R. Russell Hartford Steam Boiler Inspection and Insurance Co., 4330 Georgetown Square, Atlanta GA

Date work completed 10-7-85

[signature] / 12-4-85
Cognizant Engineer Date

Retention: Period - Lifetime, Responsibility - Modifications Supervisor

Tennessee Valley Authority
Browns Ferry Nuclear Plant

Form 164
BF 17.8
Page 4 of 5
MAR 1 9 1986

ASME SECTION XI SUMMARY REPORT

SHEET 58 of 255

Plant BFNP Unit 2
System 75
TVA Class A
~~Workplan/~~MR No. 165135

Furnish the following for the repair or replacement for the as-left condition of the component (after field work is complete). Mark all blanks (indicate NA for items which do not apply).

National Board Number of repaired or replaced component. NA

Name of the components and description (include size, capacity, material, and location)--These requirements may be satisfied by attaching an applicable drawing.
TVA weld, Dwg CHM 2071-C, weld # 75151-2-31

Name of Manufacturer TVA

Address of Manufacturer (if known) NA

Manufacturer's component identification numbers (i.e., serial number, subassembly number, heat number). If more than one component is replaced, attach weld map and identify items by item number. See dwg

Brief description of repair or replacement work performed, including conditions observed and corrective measures taken, as applicable (reference DCR, CAR, etc.; drawing may be attached with affected area circled). Ground out indications, No repair welding required

Brief description of post repair or replacement tests and examinations (if required) by instruction or procedure number. N-PT-1, N-VT-3

ANII/ANI name, employer, and business address B. Rice / R. Russell, Hartford Steam Boiler Inspection & Insurance Co., 4330 Georgetown Square, Atlanta GA

Date work completed 6-13-85

Gary R. McZinell / 9-14-85
Cognizant Engineer Date

Retention: Period - Lifetime, Responsibility - Modifications Supervisor

Tennessee Valley Authority
Browns Ferry Nuclear Plant

Form 164
BF 17.8
Page 4 of 5
MAR 19 1985

ASME SECTION XI SUMMARY REPORT

SHEET 59 of 255

Plant BFNP Unit 2
System 75
TVA Class A
~~Workplan~~/MR No. A-165136

Furnish the following for the repair or replacement for the as-left condition of the component (after field work is complete). Mark all blanks (indicate NA for items which do not apply).

National Board Number of repaired or replaced component. NA

Name of the components and description (include size, capacity, material, and location)--These requirements may be satisfied by attaching an applicable drawing.
TVA weld, dwg CHM 2071-C, Weld # 75151-2-37

Name of Manufacturer TVA

Address of Manufacturer (if known) NA

Manufacturer's component identification numbers (i.e., serial number, subassembly number, heat number). If more than one component is replaced, attach weld map and identify items by item number. See dwg

Brief description of repair or replacement work performed, including conditions observed and corrective measures taken, as applicable (reference DCR, CAR, etc.; drawing may be attached with affected area circled). Ground out defect, No repair welding required

Brief description of post repair or replacement tests and examinations (if required) by instruction or procedure number. N-PT-1, N-VT-3

ANII/ANI name, employer, and business address B. Rice / R. Russell. Hartford Steam Boiler Inspection & Insurance Co., 4330 Georgetown Square, Atlanta, GA

Date work completed 6-13-85

Cary McTurnell / 9-14-85
Cognizant Engineer Date

Retention: Period - Lifetime, Responsibility - Modifications Supervisor

TENNESSEE VALLEY AUTHORITY
BROWNS FERRY NUCLEAR PLANT
SITE DIRECTOR STANDARD PRACTICE

SEP 22 1989

FORM SDSP-403
FORM NIS-2 ATTACHMENT

SHEET 60 of 255

REFERENCE CAQR# CHA 890003713

1. (OWNER) TENNESSEE VALLEY AUTHORITY
NUCLEAR POWER
DATE 06/04/90

2. (PLANT) BROWNS FERRY NUCLEAR PLANT
P.O. BOX 2000
DECATUR, ALABAMA
SHEET [a] 1 OF 1
MR# 167985

3. WORK PERFORMED BY: TVA (COMPANY)
PO BOX 2000 (ADDRESS)
DECATUR ALABAMA (CITY AND STATE)
TYPE CODE SYMBOL STAMP [b] N/A
AUTHORIZATION NO. [b] N/A
EXPIRATION DATE [b] N/A

4. IDENTIFICATION OF SYSTEM SYSTEM-1, MS-2-H-11

5(A). APPLICATION CONSTRUCTION CODE USAS B31.1.0 19 67
EDITION THRU ADDENDA N/A CODE CASE N/A

5(B). APPLICATION EDITION OF SECTION XI UTILIZED FOR REPAIRS OR REPLACEMENTS: 1980

6(A). NAME OF COMPONENT(S) AND DESCRIPTION (INCLUDE SIZE, CAPACITY, MATERIAL, AND LOCATION AS NEEDED TO AID IN IDENTIFICATION)
UNIT-2, EL-586, STEAM TUNNEL, TURBINE BLDG

6(B). NAME OF MANUFACTURER UNKNOWN
ADDRESS OF MANUFACTURER (IF KNOWN) UNKNOWN

6(c). MANUFACTURER'S SERIAL NUMBER N/A

6(D). NATIONAL BOARD NUMBER (IF APPLICABLE) N/A

6(E). OTHER IDENTIFICATION (SUBASSEMBLY NUMBER, HEAT NUMBER, ETC.) N/A

6(F). YEAR BUILT N/A CODE CLASS ☐ 1 ☒ 2

6(G). REPAIRED ☐ REPLACED ☒ [c] REPLACEMENT ☐ [d]

6(H). ASME CODE STAMPED YES ☐ NO ☒

7. BRIEF DESCRIPTION OF REPAIR OR REPLACEMENT WORK PERFORMED.
REPLACED BOLT

8. TESTS CONDUCTED: HYDROSTATIC ☐ PNEUMATIC ☐
NOMINAL OPERATING PRESSURE ☐ OTHER ☐
PRESSURE N/A PSI TEST TEMPERATURE N/A F

9. REMARKS:

( ) APPLICABLE MANUFACTURERS DATA REPORT [e] TO BE ATTACHED.
RESPONSIBLE ENGR. R.W. AYCOCK * / SYSTEMS DATE 06/04/90
ORGANIZATION
ANII DATE

* REF CAQR# CHA 890003713

[a] SHEET NOS. FILLED IN BY TESTING AND DIAGNOSTIC PROGRAMS BRANCH.
[b] FOR WORK PERFORMED BY CERTIFICATE HOLDER
[c] REPLACED (LIKE OR EQUIVALENT).
[d] REPLACEMENT (MODIFICATION).
[e] WHEN REQUIRED BY CONSTRUCTION CODE.

RETENTION PERIOD: LIFETIME RESPONSIBLE ORGANIZATION: NM-PROCESSES/SPECIAL PROGRAMS

ASME SECTION XI SUMMARY REPORT

Tennessee Valley Authority
Browns Ferry Nuclear Plant
P. O. Box 2000
Decatur, Alabama

Comm. Service Date: March 1, 1975
System: Recirculation
ASME Section III Class I, TVA Class A
Workplan: 2079-85
ECN/FCR: P5016/1828
Maintenance Request: A-168093
and A-168092

I. Repair or Replacement Work Performed

A. SS-9, Loop A (729E461 sh.1 R901, Sh.2 R901) MR-A-168092 removed the snubber lug. Workplan 2079-85 revised the drawings to document the removal of the lugs.

B. SS-9, Loop B (729E461 Sh.1 R901, Sh. 2 R901) MR-A-168093 removed the snubber lug. Workplan 2079-85 revised the drawings to document the removal of the lugs.

C. Four inch bypass and SS-9 Snubbers (729E461 SH. 1 R901, Sh.2 R902, 153F754 Sh.1, R902)
Workplan 2079-85 revised the drawings to document the removal of the four inch bypass line and the SS-9 snubbers removed under ECN L1633.

II. Post repair or replacement test and examinations

A. Snubber lug removal areas inspected per N-VT-3, and N-PT-1

B. Pipe thickness measurements were taken per N-UT-24.

C. No ANI/ANII holdpoints or witness points.

III. Manufacturers component identification Nos.
None

IV. Manufacturers
None

V. ANI/ANII/AIA
ANI: Roosevelt Russell/Bill Rice
ANII: Roosevelt Russell/Bill Rice
AIA: The Hartford Steam Boiler Insp. and Ins. Co.
4330 Georgetown Square
Atlanta, Ga. 30338

VI. Date Work Completed:

Above Information Verified:
Michael B. Lee 1/20/87
Cognizant Engineer/Date
M. C. [illegible] 1/20/87
Cognizant Sect. Supv./Date

TENNESSEE VALLEY AUTHORITY
BROWNS FERRY NUCLEAR PLANT
SITE DIRECTOR STANDARD PRACTICE

SEP 22 1989

FORM PAGE 1 (
FORM SDSP-40
SDSP 13.3

FORM SDSP-403
FORM NIS-2 ATTACHMENT

SHEET 62 of 255

REF. CAQR-4 CHA 890003713

1. (OWNER) TENNESSEE VALLEY AUTHORITY
NUCLEAR POWER — DATE 06-12-90

2. (PLANT) BROWNS FERRY NUCLEAR PLANT
P.O. BOX 2000
DECATUR, ALABAMA — SHEET [a] 1 OF 1

MR# 168097

3. WORK PERFORMED BY: TVA (COMPANY) — TYPE CODE SYMBOL STAMP [b] N/A

PO BOX 2000 (ADDRESS) — AUTHORIZATION NO. [b] N/A

DECATUR ALABAMA (CITY AND STATE) — EXPIRATION DATE [b] N/A

4. IDENTIFICATION OF SYSTEM: SYSTEM-68.

5(A). APPLICATION CONSTRUCTION CODE USAS B31.1.0 19 67
EDITION THRU ADDENDA N/A CODE CASE N/A

5(B). APPLICATION EDITION OF SECTION XI UTILIZED FOR REPAIRS OR REPLACEMENTS: 1980

6(A). NAME OF COMPONENT(S) AND DESCRIPTION (INCLUDE SIZE, CAPACITY, MATERIAL, AND LOCATION AS NEEDED TO AID IN IDENTIFICATION) MRM 7-6-90
UNIT-2, DRYWELL, ~~WELD # KR-2-48, EL-556~~ 2-HGR-68-H-12, 2-HGR-68-H-12TA

6(B). NAME OF MANUFACTURER TVA
ADDRESS OF MANUFACTURER (IF KNOWN) PO BOX 2000 DECATUR ALA.

6(C). MANUFACTURER'S SERIAL NUMBER N/A

6(D). NATIONAL BOARD NUMBER (IF APPLICABLE) N/A

6(E). OTHER IDENTIFICATION (SUBASSEMBLY NUMBER, HEAT NUMBER, ETC.) N/A

6(F). YEAR BUILT N/A — CODE CLASS ☒ 1 ☐ 2

6(G). REPAIRED ☒ — REPLACED ☐ [c] — REPLACEMENT ☐ [d]

6(H). ASME CODE STAMPED YES ☐ NO ☒

7. BRIEF DESCRIPTION OF REPAIR OR REPLACEMENT WORK PERFORMED.
REMOVED 2" PIPE SUPPORT FOR TOUCH-UP WELDING AND REINSTALLED HANGER

8. TESTS CONDUCTED: HYDROSTATIC ☐ PNEUMATIC ☐
NOMINAL OPERATING PRESSURE ☐ OTHER ☐
PRESSURE N/A PSI. TEST TEMPERATURE N/A F°

9. REMARKS:

( ) APPLICABLE MANUFACTURERS DATA REPORT [e] TO BE ATTACHED.

RESPONSIBLE ENGR. R.W. AYLOCK / SYSTEM ORGANIZATION DATE 06-12-90

ANII R. Russell Jr. DATE 6-20-90

REF CAQR-4 CHA 890003713

[a] SHEET NOS. FILLED IN BY TESTING AND DIAGNOSTIC PROGRAMS BRANCH.
[b] FOR WORK PERFORMED BY CERTIFICATE HOLDER
[c] REPLACED (LIKE OR EQUIVALENT).
[d] REPLACEMENT (MODIFICATION).
[e] WHEN REQUIRED BY CONSTRUCTION CODE.

RETENTION PERIOD: LIFETIME RESPONSIBLE ORGANIZATION: NM-PROCESSES/SPECIAL PROGRAMS

TENNESSEE VALLEY AUTHORITY
BROWNS FERRY NUCLEAR PLANT
SITE DIRECTOR STANDARD PRACTICE

SEP 22 1989

FORM PAGE 1
FORM SDSP-40
SDSP 13.3

FORM SDSP-403
FORM NIS-2 ATTACHMENT

SHEET 63 of 255

*REFERENCE CAQ#CHA890003713

1. (OWNER) TENNESSEE VALLEY AUTHORITY
NUCLEAR POWER
DATE 06-14-90

2. (PLANT) BROWNS FERRY NUCLEAR PLANT
P.O. BOX 2000
DECATUR, ALABAMA
SHEET [a] 1 OF 1

MR# 168098

3. WORK PERFORMED BY: TVA (COMPANY)
TYPE CODE SYMBOL STAMP [b] N/A
PO BOX 2000 (ADDRESS)
AUTHORIZATION NO. [b] N/A
DECATUR ALABAMA (CITY AND STATE)
EXPIRATION DATE [b] N/A

4. IDENTIFICATION OF SYSTEM SYSTEM-68

5(A). APPLICATION CONSTRUCTION CODE USAS B31.1.0 19 67
EDITION THRU ADDENDA N/A CODE CASE N/A

5(B). APPLICATION EDITION OF SECTION XI UTILIZED FOR REPAIRS OR REPLACEMENTS: 1980

6(A). NAME OF COMPONENT(S) AND DESCRIPTION (INCLUDE SIZE, CAPACITY, MATERIAL, AND LOCATION AS NEEDED TO AID IN IDENTIFICATION)
UNIT-2, EL-556, RXBLDG, SYSTEM-68, WELD# RP-2-56

6(B). NAME OF MANUFACTURER TVA
ADDRESS OF MANUFACTURER (IF KNOWN) PO BOX 2000 DECATUR ALA.

6(c). MANUFACTURER'S SERIAL NUMBER N/A

6(D). NATIONAL BOARD NUMBER (IF APPLICABLE) N/A

6(E). OTHER IDENTIFICATION (SUBASSEMBLY NUMBER, HEAT NUMBER, ETC.) N/A

6(F). YEAR BUILT N/A CODE CLASS ☒ 1 ☐ 2

6(G). REPAIRED ☒ REPLACED ☐ [c] REPLACEMENT ☐ [d]

6(H). ASME CODE STAMPED YES ☐ NO ☒

7. BRIEF DESCRIPTION OF REPAIR OR REPLACEMENT WORK PERFORMED.
REMOVED 2" PIPE SUPPORT TO PERF VIBRATION TESTING
PER MAI-22 & MAI-23 RWA 06/27/90

8. TESTS CONDUCTED: HYDROSTATIC ☐ PNEUMATIC ☐
NOMINAL OPERATING PRESSURE ☐ OTHER ☐
PRESSURE N/A PSI TEST TEMPERATURE N/A F°

9. REMARKS:

( ) APPLICABLE MANUFACTURERS DATA REPORT [e] TO BE ATTACHED.

RESPONSIBLE ENGR. R.W. AYCOCK / SYSTEMS DATE 06-14-90
ORGANIZATION

ANII R. Russell Jr. DATE 6-25-90

[a] SHEET NOS. FILLED IN BY TESTING AND DIAGNOSTIC PROGRAMS BRANCH.
[b] FOR WORK PERFORMED BY CERTIFICATE HOLDER
[c] REPLACED (LIKE OR EQUIVALENT).
[d] REPLACEMENT (MODIFICATION).
[e] WHEN REQUIRED BY CONSTRUCTION CODE.

RETENTION PERIOD: LIFETIME RESPONSIBLE ORGANIZATION: NM-PROCESSES/SPECIAL PROGRAMS

TENNESSEE VALLEY AUTHORITY
BROWNS FERRY NUCLEAR PLANT
SITE DIRECTOR STANDARD PRACTICE

SEP 22 1989

FORM SDSP-403
FORM NIS-2 ATTACHMENT

SHEET 64 of 255

REFERENCE CAQR CHA890003713

1. (OWNER) TENNESSEE VALLEY AUTHORITY
NUCLEAR POWER

DATE 05/24/90

2. (PLANT) BROWNS FERRY NUCLEAR PLANT
P.O. BOX 2000
DECATUR, ALABAMA

SHEET [a] 1 OF 1

MR# 168099

3. WORK PERFORMED BY: TVA (COMPANY)
PO BOX 2000 (ADDRESS)
DECATUR ALABAMA (CITY AND STATE)

TYPE CODE SYMBOL STAMP [b] N/A
AUTHORIZATION NO. [b] N/A
EXPIRATION DATE [b] N/A

4. IDENTIFICATION OF SYSTEM SYSTEM-74- RHR

5(A). APPLICATION CONSTRUCTION CODE USAS B31.1.0 19 67
EDITION THRU ADDENDA N/A CODE CASE N/A

5(B). APPLICATION EDITION OF SECTION XI UTILIZED FOR REPAIRS OR REPLACEMENTS: 1980

6(A). NAME OF COMPONENT(S) AND DESCRIPTION (INCLUDE SIZE, CAPACITY, MATERIAL, AND LOCATION AS NEEDED TO AID IN IDENTIFICATION)
UNIT-2, RHR-67, SYSTEM-74, EL-617

6(B). NAME OF MANUFACTURER TVA
ADDRESS OF MANUFACTURER (IF KNOWN) PO BOX 2000 DECATUR ALA.

6(c). MANUFACTURER'S SERIAL NUMBER N/A

6(D). NATIONAL BOARD NUMBER (IF APPLICABLE) N/A

6(E). OTHER IDENTIFICATION (SUBASSEMBLY NUMBER, HEAT NUMBER, ETC.) N/A

6(F). YEAR BUILT N/A CODE CLASS ☒ 1 ☐ 2

6(G). REPAIRED ☒ REPLACED ☐ [c] REPLACEMENT ☐ [d]

6(H). ASME CODE STAMPED YES ☐ NO ☒

7. BRIEF DESCRIPTION OF REPAIR OR REPLACEMENT WORK PERFORMED
REMOVED SNUBBER RHR-67, TO FACILITATE LASI ON WELDS. WORK WAS DONE ON WORK PLAN #217985

8. TESTS CONDUCTED: HYDROSTATIC ☐ PNEUMATIC ☐
NOMINAL OPERATING PRESSURE ☐ OTHER ☐
PRESSURE N/A PSI TEST TEMPERATURE N/A F°

9. REMARKS:

( ) APPLICABLE MANUFACTURERS DATA REPORT [e] TO BE ATTACHED.

RESPONSIBLE ENGR. R.W. AYCOCK / SYSTEMS DATE 05/24/90
ORGANIZATION

ANII *R. Russell DATE 5-31-90

* REF CAQR CHA 890003713

[a] SHEET NOS. FILLED IN BY TESTING AND DIAGNOSTIC PROGRAMS BRANCH.
[b] FOR WORK PERFORMED BY CERTIFICATE HOLDER
[c] REPLACED (LIKE OR EQUIVALENT).
[d] REPLACEMENT (MODIFICATION).
[e] WHEN REQUIRED BY CONSTRUCTION CODE.

RETENTION PERIOD: LIFETIME RESPONSIBLE ORGANIZATION: NM-PROCESSES/SPECIAL PROGRAMS

TENNESSEE VALLEY AUTHORITY
BROWNS FERRY NUCLEAR PLANT
SITE DIRECTOR STANDARD PRACTICE

SEP 22 1989

FORM PAGE 1 OF 1
FORM SDSP-403
SDSP 13.3

SHEET 65 of 255

FORM SDSP-403
FORM NIS-2 ATTACHMENT

* REFERENCE CAQR CHA890083713

1. (OWNER) TENNESSEE VALLEY AUTHORITY
NUCLEAR POWER

DATE 04/28/90

2. (PLANT) BROWNS FERRY NUCLEAR PLANT
P.O. BOX 2000
DECATUR, ALABAMA

SHEET [a] 1 OF 1

MR# 168100.

3. WORK PERFORMED BY: TVA (COMPANY)
PO BOX 2000 (ADDRESS)
DECATUR ALABAMA (CITY AND STATE)

TYPE CODE SYMBOL STAMP [b] N/A
AUTHORIZATION NO. [b] N/A
EXPIRATION DATE [b] N/A.

4. IDENTIFICATION OF SYSTEM SYSTEM 74-RHR

5(A). APPLICATION CONSTRUCTION CODE USAS B31.1.0 19 67
EDITION THRU ADDENDA N/A CODE CASE Rev 1 Y D

5(B). APPLICATION EDITION OF SECTION XI UTILIZED FOR REPAIRS OR REPLACEMENTS: 1980

6(A). NAME OF COMPONENT(S) AND DESCRIPTION (INCLUDE SIZE, CAPACITY, MATERIAL, AND LOCATION AS NEEDED TO AID IN IDENTIFICATION)
DRYWELL, RHR-69, SNUBBER, UNIT-2

6(B). NAME OF MANUFACTURER TVA
ADDRESS OF MANUFACTURER (IF KNOWN) PO BOX 2000 DECATUR ALA.

6(c). MANUFACTURER'S SERIAL NUMBER N/A

6(D). NATIONAL BOARD NUMBER (IF APPLICABLE) N/A

6(E). OTHER IDENTIFICATION (SUBASSEMBLY NUMBER, HEAT NUMBER, ETC.) N/A

6(F). YEAR BUILT 85 CODE CLASS ☒ 1 ☐ 2

6(G). REPAIRED ☒ REPLACED ☐ [c] REPLACEMENT ☐ [d]

6(H). ASME CODE STAMPED YES ☐ NO ☒

7. BRIEF DESCRIPTION OF REPAIR OR REPLACEMENT WORK PERFORMED.
REMOVED SNUBBER PERFORM VIBRATION & NDE TEST ON RHR SUPPORT

8. TESTS CONDUCTED: HYDROSTATIC ☐ PNEUMATIC ☐
NOMINAL OPERATING PRESSURE ☐ OTHER ☐
PRESSURE N/A PSI TEST TEMPERATURE N/A F°

9. REMARKS: ~~TEMPE~~ RWA 4/28/90 TEMPORARY REMOVE RHR-69 TO PERFORM NDE TEST & VIBRATION TEST

( ) APPLICABLE MANUFACTURERS DATA REPORT [e] TO BE ATTACHED.

RESPONSIBLE ENGR. RW AYCOCK / SYSTEM DATE 04/28/90
ORGANIZATION

ANII *R. Russell K. DATE 5-19-90

[a] SHEET NOS. FILLED IN BY TESTING AND DIAGNOSTIC PROGRAMS BRANCH.
[b] FOR WORK PERFORMED BY CERTIFICATE HOLDER
[c] REPLACED (LIKE OR EQUIVALENT).
[d] REPLACEMENT (MODIFICATION).
[e] WHEN REQUIRED BY CONSTRUCTION CODE.

RETENTION PERIOD: LIFETIME RESPONSIBLE ORGANIZATION: NM-PROCESSES/SPECIAL PROGRAMS

Tennessee Valley Authority
Browns Ferry Nuclear Plant

*Form SDSP-26
SDSP-13.3

ASME SECTION XI SUMMARY REPORT

REF. CAQNACHA890003713

Tennessee Valley Authority
Office of Nuclear Power, 1750 CST2-C
Browns Ferry Nuclear Plant Unit 2
P.O. Box 2000
Decatur, Alabama

Comm. Service Date 3/1/75
System RWCU
TVA Class A
*Workplan/MR No. 2080-85

*THIS SUPPORTS MRI# 168643

Furnish the following for the repair or replacement for the as-left condition of the component (after field work is complete). Mark all blanks (indicate NA for items which do not apply).

National Board Number of repaired or replaced component. N/A

Name of the components and description (include size, capacity, material, and location)--Theses requirements may be satisfied by attaching an applicable drawing.
Vent, Drain and test connection tie back supports V/D-2 and V/D-3. (See attached DWG's 47B407-2R2 and 47B407-3R0

Name of Manufacturer Guyon Alloys, Inc.

Address of Manufacturer (if known) Harrison, NJ

Manufacturer's component identification numbers (i.e., serial number, subassembly number, heat number). If more than one component is replaced, attach weld map and identify items by item number.
Original procurement document No. 180444
Manufacturers heat #466139

Brief description of repair or replacement work performed, including conditions observed and corrective measures taken, as applicable (reference DCR, CAR, etc.; drawing may be attached with attached affected area circled).
Replaced 1" pipe, SCH. 80 Stainless STL., SA-312 TP304 used for RWCU V/D-2 and V/D-3 tie-back supports.

Brief description of post repair or replacement tests and examinations (if required) by instruction or procedure number. NDE was performed per N-VT-2, N-VT-3 and N-PT-1.

ANII/ANI name, employer, and business address ANI - Roosevelt Russell, ANII-Bill Rice; AIA - The Hartford Steam Boiler Insp. and Ins. Co. 1117 Perimeter Center West, Suite E301, Atlanta, GA 30338

Date work completed July 16, 1986

Cognizant Engineer — Date 10/28/86

Retention Period - Lifetime Responsibility - Modifications Supervisor
Addendum

Tennessee Valley Authority
Browns Ferry Nuclear Plant

MRA-168644

REV 0001

*Form SDSP-26
SDSP-13.3
Page 4 of 5

SHEET 67 of 255

ASME SECTION XI SUMMARY REPORT

Tennessee Valley Authority
Office of Nuclear Power, 1750 CST2-C
Browns Ferry Nuclear Plant Unit 2
P.O. Box 2000
Decatur, Alabama

Comm. Service Date 3/1/75
System RWCU
TVA Class A
Workplan/MR No. 2080-85

Furnish the following for the repair or replacement for the as-left condition of the component (after field work is complete). Mark all blanks (indicate NA for items which do not apply).

National Board Number of repaired or replaced component. N/A

Name of the components and description (include size, capacity, material, and location)--Theses requirements may be satisfied by attaching an applicable drawing.
Vent, Drain and test connection tie back supports V/D-2 and V/D-3. (See attached DWG's 47B407-2R2 and 47B407-3R0

Name of Manufacturer Guyon Alloys, Inc.

Address of Manufacturer (if known) Harrison, NJ

Manufacturer's component identification numbers (i.e., serial number, subassembly number, heat number). If more than one component is replaced, attach weld map and identify items by item number.
Original procurement document No. 180444
Manufacturers heat #466139

Brief description of repair or replacement work performed, including conditions observed and corrective measures taken, as applicable (reference DCR, CAR, etc.; drawing may be attached with attached affected area circled).
Replaced 1" pipe, SCH. 80 Stainless STL., SA-312 TP304 used for RWCU V/D-2 and V/D-3 tie-back supports.

Brief description of post repair or replacement tests and examinations (if required) by instruction or procedure number. NDE was performed per N-VT-2, N-VT-3 and N-PT-1.

ANII/ANI name, employer, and business address ANI - Roosevelt Russell, ANII-Bill Rice, AIA - The Hartford Steam Boiler Insp. and Ins. Co. 1117 Perimeter Center West, Suite E301, Atlanta, GA 30338

Date work completed July 16, 1986

Cognizant Engineer — Date 10/28/86

Retention Period - Lifetime Responsibility - Modifications Supervisor
Addendum

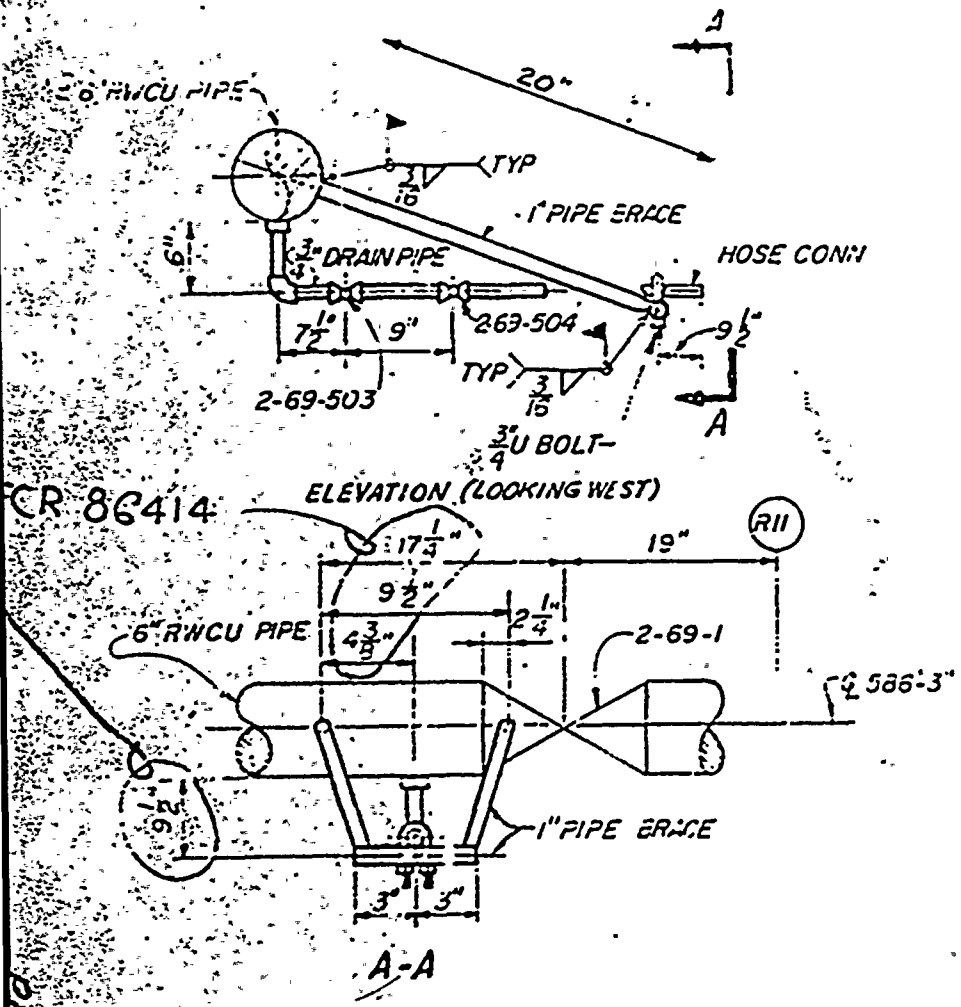

CR 86414

V/D-2

NON-INTENT RG

WP-2080-85

RO ISSUE FOR ECN PUBS
NOT TO SCALE

REFERENCE

SHEET 68 of 255

47B407-2

PAGE 1770

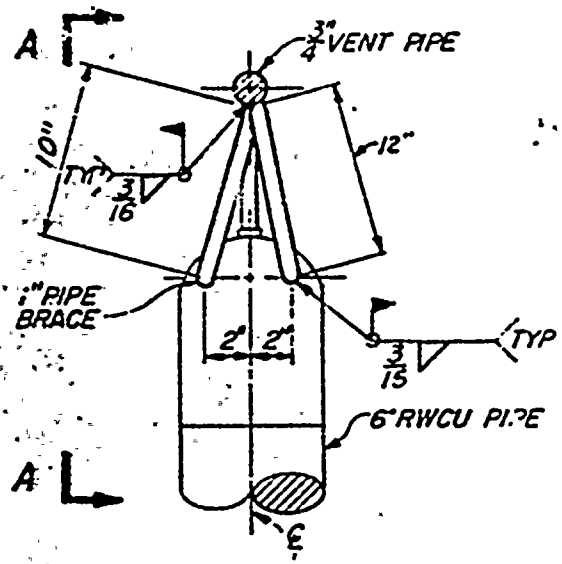

ELEVATION (LOOKING EAST)

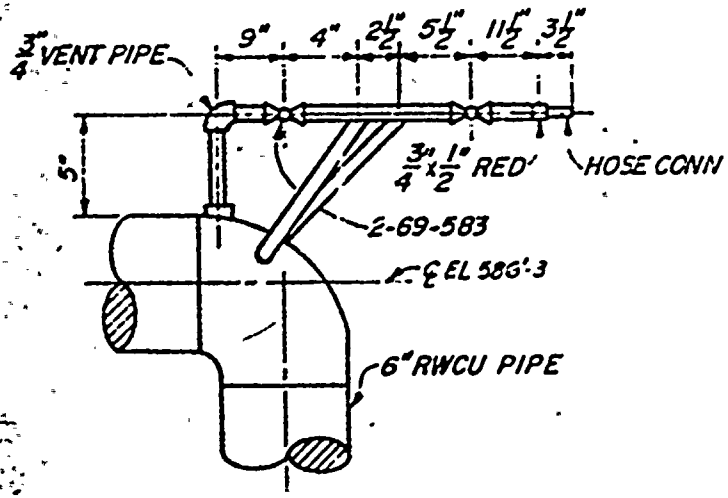

A-A

V/D-3

NOTES: 1

1. FOR GENERAL NOTES SEE DWG 47B407-1

REFERENCE DWGS
47W406-1.....(PIPING)
47W406-2.....(PIPING)

RO ISSUE FOR ECN-PO625

NOT TO SCALE

SHEET 69 of 85

WP# 2080-85

POWERHOUSE
REACTOR BUILDING - UNIT 2

MECHANICAL
VENT, DRAIN & TEST
CONNECTION CONFIGURATION

BROWNS FERRY NUCLEAR PLANT
TENNESSEE VALLEY AUTHORITY

24.83 | 47W147B407-3 | RO

Tennessee Valley Authority
Browns Ferry Nuclear Plant

Form 164
BF 17.8
Page 4 of 5
MAR 1 9 1985

SHEET 70 of 255

ASME SECTION XI SUMMARY REPORT

Plant BFNP
System RHR-74
TVA Class 2
Workplan/MR No. 169463

Furnish the following for the repair or replacement for the as-left condition of the component (after field work is complete). Mark all blanks (indicate NA for items which do not apply).

National Board Number of repaired or replaced component. NA

Name of the components and description (include size, capacity, material, and location)--These requirements may be satisfied by attaching an applicable drawing. RESIDUAL HEAT REMOVAL SYS. SUPPORT No H-329 (REFERENCE 47B452-138 R2)

Name of Manufacturer NA

Address of Manufacturer (if known) NA

Manufacturer's component identification numbers (i.e., serial number, subassembly number, heat number). If more than one component is replaced, attach weld map and identify items by item number. NA

Brief description of repair or replacement work performed, including conditions observed and corrective measures taken, as applicable (reference DCR, CAR, etc.; drawing may be attached with affected area circled). REPAIRED UNDERSIZED WELD PER SM-P-1 BY ADDING WELD METAL AND REMOVED UNSPECIFIED WELDS (REFERENCE WELD MAP WITH MR A-169463)

Brief description of post repair or replacement tests and examinations (if required) by instruction or procedure number. WELD INSPECTION PER N VT-2, ~~INSERVICE INSPECTION PER N-VT-1~~ 8-19-85

ANII/ANI name, employer, and business address ROOSEVELT RUSSELL/BILL RICE
THE HARTFORD STEAM BOILER INSPECTION & INSURANCE CO.
4330 GEORGETOWN SQUARE, ATLANTA, GA. 30338

Date work completed 7-22-85

Timothy L. Bailey 8-19-85
Cognizant Engineer Date

Retention: Period - Lifetime, Responsibility - Modifications Supervisor

0009323

Tennessee Valley Authority
Browns Ferry Nuclear Plant

Form 164
BF 17.8
Page 4 of 5
MAR 1 9 1986

SHEET 71 of 255

ASME SECTION XI SUMMARY REPORT

Plant BFNP (Unit 2)
System 74
TVA Class A
~~Workplan~~/MR No. A-170016

Furnish the following for the repair or replacement for the as-left condition of the component (after field work is complete). Mark all blanks (indicate NA for items which do not apply).

National Board Number of repaired or replaced component. NA

Name of the components and description (include size, capacity, material, and location)--These requirements may be satisfied by attaching an applicable drawing. 1" Pipe, New weld # 74151-2-115, See dwg CHM 2070-C

Name of Manufacturer NA

Address of Manufacturer (if known) NA

Manufacturer's component identification numbers (i.e., serial number, subassembly number, heat number). If more than one component is replaced, attach weld map and identify items by item number. See Dwg

Brief description of repair or replacement work performed, including conditions observed and corrective measures taken, as applicable (reference DCR, CAR, etc.; drawing may be attached with affected area circled). Ground out indication No weld repair required

Brief description of post repair or replacement tests and examinations (if required) by instruction or procedure number. N-PT-1, N-VT-3

ANII/ANI name, employer, and business address Bill Rice/R. Russell Hartford Steam Boiler - Atlanta GA.

Date work completed 6-25-85

Gary F McConnell 6-25-85
Cognizant Engineer Date

Retention: Period - Lifetime, Responsibility - Modifications Supervisor

TENNESSEE VALLEY AUTHORITY
BROWNS FERRY NUCLEAR PLANT
SITE DIRECTOR STANDARD PRACTICE

SEP 22 1989

FORM PAGE 1 OF 1
FORM SDSP-403
SDSP 13.3

SHEET 72 of 255

FORM SDSP-403
FORM NIS-2 ATTACHMENT

1. (OWNER) TENNESSEE VALLEY AUTHORITY
NUCLEAR POWER

DATE 05/24/90

2. (PLANT) BROWNS FERRY NUCLEAR PLANT
P.O. BOX 2000
DECATUR, ALABAMA

SHEET [a] 1 OF 1

MR# 172934

3. WORK PERFORMED BY: TVA
COMPANY

TYPE CODE SYMBOL STAMP [b] N/A

POBOX 2000
ADDRESS

AUTHORIZATION NO. [b] N/A

DECATUR ALABAMA
CITY AND STATE

EXPIRATION DATE [b] N/A

4. IDENTIFICATION OF SYSTEM HPCI - 73

5(A). APPLICATION CONSTRUCTION CODE USAS B31.1.0 19 67
EDITION THRU ADDENDA N/A CODE CASE N/A

5(B). APPLICATION EDITION OF SECTION XI UTILIZED FOR REPAIRS OR REPLACEMENTS: 1980

6(A). NAME OF COMPONENT(S) AND DESCRIPTION (INCLUDE SIZE, CAPACITY, MATERIAL, AND LOCATION AS NEEDED TO AID IN IDENTIFICATION)
UNIT-2, RXBLDG, TOP OF TORUS, SUPPORT H-80.

6(B). NAME OF MANUFACTURER TVA
ADDRESS OF MANUFACTURER (IF KNOWN) PO BOX 2000 DECATUR ALA.

6(c). MANUFACTURER'S SERIAL NUMBER N/A

6(D). NATIONAL BOARD NUMBER (IF APPLICABLE) N/A

6(E). OTHER IDENTIFICATION (SUBASSEMBLY NUMBER, HEAT NUMBER, ETC.) N/A

6(F). YEAR BUILT N/A CODE CLASS ☐ 1 ☒ 2

6(G). REPAIRED ☐ REPLACED ☒ [c] REPLACEMENT ☐ [d]

6(H). ASME CODE STAMPED YES ☐ NO ☒

7. BRIEF DESCRIPTION OF REPAIR OR REPLACEMENT WORK PERFORMED.
BOLT ON BOTTOM OF PIPE CLAMP DOES NOT HAVE ENOUGH THREAD ENGAGEMENT.

8. TESTS CONDUCTED: HYDROSTATIC ☐ PNEUMATIC ☐
NOMINAL OPERATING PRESSURE ☐ OTHER ☐
PRESSURE N/A PSI TEST TEMPERATURE N/A F°

9. REMARKS:

( ) APPLICABLE MANUFACTURERS DATA REPORT [e] TO BE ATTACHED.

RESPONSIBLE ENGR. R.W. AYCOCK / SYSTEMS DATE 05/24/90
ORGANIZATION

ANII *R. Russell Jr. DATE 5-31-90

* REF. CAQR # CHA890003713

[a] SHEET NOS. FILLED IN BY TESTING AND DIAGNOSTIC PROGRAMS BRANCH.
[b] FOR WORK PERFORMED BY CERTIFICATE HOLDER
[c] REPLACED (LIKE OR EQUIVALENT).
[d] REPLACEMENT (MODIFICATION).
[e] WHEN REQUIRED BY CONSTRUCTION CODE.

RETENTION PERIOD: LIFETIME RESPONSIBLE ORGANIZATION: NM-PROCESSES/SPECIAL PROGRAMS

ATTACHMENT 2

ASME SECTION XI SUMMARY REPORT

Plant BFNP UNIT-2
System 73
TVA Class
Work Instr. No. MR-A-172981
N-5 No.

Furnish the following for the repair or replacement for the "As Left" condition of the component (after field work is complete). Mark all blanks (indicate N/A for items which do not apply).

A. National Board Number of repaired or replaced component NA

B. Name of the components and description (include size, capacity, material, and location)-- these requirements may be satisfied by attaching an applicable drawing ~~NA~~ MRR 10-20-89 HPCI PIPE SUPPORT # R-23

C. Name of manufacturer NA

D. Address of manufacturer (if known) NA

E. Manufacturer's component identification numbers (i.e., serial number, subassembly number, heat number, etc.). If more than one component is replaced, attach weld map and identify items by item number. NA

F. Brief description of repair or replacement work performed, including conditions observed and corrective measures taken, as applicable (Reference DCR, CAR, etc. drawing may be attached with affected area circled.). RETURN HPCI R-23 SUPPORT TO DRAWING CONFIGURATION.

G. Brief description of post repair or replacement tests and examinations (if required) by instruction or procedure number N-PT-1

H. ANI/ANII name, employer, and business address ROOSEVELT RUSSELL JR. ANI, BILL RICE ANII, HARTFORD STEAM BOILER INSPECTION & INSURANCE CO, 1117 PERIMETER CENTER WEST, SUITE E 301, ATLANTA, GA.

I. Date work completed 3-27-84

M. R. Marston
Cognizant Engineer

10-20-89
Date

29/39

ATTACHMENT 2

ASME SECTION XI SUMMARY REPORT

Plant BFNP
System HPCI
TVA Class D
Work Instr. No. A173743
N-5 No. N/A

Furnish the following for the repair or replacement for the "As Left" condition of the component (after field work is complete). Mark all blanks (indicate N/A for items which do not apply).

A. National Board Number of repaired or replaced component N/A

B. Name of the components and description (include size, capacity, material, and location)-- these requirements may be satisfied by attaching an applicable drawing. N/A

C. Name of manufacturer GRINNELL

D. Address of manufacturer (if known) N/A

E. Manufacturer's component identification numbers (i.e., serial number, subassembly number, heat number, etc.). If more than one component is replaced, attach weld map and identify items by item number. N/A

F. Brief description of repair or replacement work performed, including conditions observed and corrective measures taken, as applicable (Reference DCR, CAR, etc. drawing may be attached with affected area circled). Install spacer & replace bolts

G. Brief description of post repair or replacement tests and examinations (if required) by instruction or procedure number Inspect per MMI-23

H. ANI/AMII name, employer, and business address

I. Date work completed 3/28/84

MRK
Cognizant Engineer

3/30/84
Date

MR A-177364 Attachment
Page 3 of 25

Tennessee Valley Authority
Bronws Ferry Nuclear Plant

Form 164
BF 17.8
Page 4 Of 5
AUG 0 7 1985

SHEET 75 of 255

ASME SECTION XI SUMMARY REPORT

*Tennessee Valley Authority
*Office of Nuclear Power, 1750 CST2-C
*Browns Ferry Nuclear Plant Unit 2
*P.O. Box 2000
*Decatur, Alabama

Comm. Service Date 1974
System RHR 74
TVA Class ASME Section III CLASS 2
Workplan/(MR) No. A-177364

Furnish the following for the repair or replacement for the as-left condition of the component (after field work is complete). Mark all blanks (indicate NA for items which do not apply).

National Board Number of repaired or replaced component. N/A

Name of the components and description (include size, capacity, material, and location)—These requirements may be satisfied by attaching an applicable drawing.
4" 300LB CAST STEEL GLOBE VALVE, RHR SYSTEM I SUPPRESION POOL SPRAY VALVE, TOP OF TORUS A290°.

Name of Manufacturer WALWORTH COMPANY

Address of Manufacturer (if known) GREENSBURG, PA.

Manufacturer's component identification numbers (i.e., serial number, subassembly number, heat number). If more than one component is replaced, attach weld map and identify items by item number. Vendor DWG No. A-12336-M-1C TVA CONTRACT 91750/90744 BF3-10-30 2FCV 74-58

Brief description of repair or replacement work performed, including conditions observed and corrective measures taken, as applicable (reference DCR, CAR, etc.; drawing may be attached with attached affected area circled). Vendor DWG No. A-12336-M-1C, CUT VALVE OUT OF LINE AND ROTATED FOR PROPER FLOW.

Brief description of post repair or replacement tests and examintaions (if required) by instruction or procedure number. N-PT-1, N-VT-3, N-RT-1, S.I. 4.6.G, SE 3.3

ANII/ANI name, employer, and business address THE HARTFORD STEAM BOILER INSPECTION AND INSURANCE CO., ATLANTA, GA.

Date work completed 9/1/88

Albert E. Cadle / 9/1/88
Cognizant Engineer Date

Retention: Period - Lifetime, Responsibility - Modifications Supervisor

*Revision

0510K

MR # A-177365 Attachment SHT 4 of

Tennessee Valley Authority
Bronws Ferry Nuclear Plant

Form 164
BF 17.8
Page 4 Of 5
AUG 0 7 1985

SHEET 76 of 255

ASME SECTION XI SUMMARY REPORT

*Tennessee Valley Authority
*Office of Nuclear Power, 1750 CST2-C
*Browns Ferry Nuclear Plant Unit 2
*P.O. Box 2000
*Decatur, Alabama

Comm. Service Date 1975
System 71 RCIC
TVA Class 2
Workplan/(MR) No. A-177365

Furnish the following for the repair or replacement for the as-left condition of the component (after field work is complete). Mark all blanks (indicate NA for items which do not apply).

National Board Number of repaired or replaced component. N/A

Name of the components and description (include size, capacity, material, and location)--These requirements may be satisfied by attaching an applicable drawing. 2"2HCV 71-32 - Stop Check Globe Valve

Name of Manufacturer Velan Mfg.

Address of Manufacturer (if known) Montreal · Canada

Manufacturer's component identification numbers (i.e., serial number, subassembly number, heat number). If more than one component is replaced, attach weld map and identify items by item number. Velan Dwg. P-33160-8 Contr. 86 C60-90744 - Weld Repaired

Brief description of repair or replacement work performed, including conditions observed and corrective measures taken, as applicable (reference DCR, CAR, etc.; drawing may be attached with attached affected area circled). Weld buildup Valve bonnet to allow for seat Ring Machining.

Brief description of post repair or replacement tests and examintaions (if required) by instruction or procedure number. N-PT-1 AND N-VT-3

ANII/ANI name, employer, and business address Roosevelt Russell/Bill Rice Hartford Boiler. THE HARTFORD STEAM BOILER INSPECTION AND INSURANCE Co., ATLANTA, GA.

Date work completed 9/25/85

C. W. Pratt / 2/24/86
Cognizant Engineer Date

Retention: Period - Lifetime, Responsibility - Modifications Supervisor

*Revision

0510K

Tennessee Valley Authority
Bronws Ferry Nuclear Plant

Form 164
BF 17.8
Page 4 Of 5
AUG 0 7 1985

SHEET 77 of 255

ASME SECTION XI SUMMARY REPORT

*Tennessee Valley Authority
*Office of Nuclear Power, 1750 CST2-C
*Browns Ferry Nuclear Plant Unit 2
*P.O. Box 2000
*Decatur, Alabama

Comm. Service Date 1974
System RHR 74
TVA Class C SECTION III CLASS 2
Workplan (MR) No. A-177375

Furnish the following for the repair or replacement for the as-left condition of the component (after field work is complete). Mark all blanks (indicate NA for items which do not apply).

National Board Number of repaired or replaced component. N/A

Name of the components and description (include size, capacity, material, and location)--These requirements may be satisfied by attaching an applicable drawing.
24" CAST Steel PRESSURE SEAL ANGLE VALVE, RHR LOOP I REACTOR BLDG ELEVATION 565'-0" INSIDE CLEAN ROOM

Name of Manufacturer WALWORTH COMPANY

Address of Manufacturer (if known) GREENSBURG, PA

Manufacturer's component identification numbers (i.e., serial number, subassembly number, heat number). If more than one component is replaced, attach weld map and identify items by item number. VENDOR DWG # A-12337-M-3A CONTRACT No. 91750/90744

Brief description of repair or replacement work performed, including conditions observed and corrective measures taken, as applicable (reference DCR, CAR, etc.; drawing may be attached with attached affected area circled). REPLACED PRESSURE SEAL RING PART #8 ON VENDOR DWG.

Brief description of post repair or replacement tests and examintaions (if required) by instruction or procedure number. N/A

ANII/ANI name, employer, and business address THE HARTFORD STEAM BOILER INSPECTION AND INSURANCE CO. ATLANTA, GA.

Date work completed 9/6/86

Albert E. Cooke / 4-20-88
Cognizant Engineer Date

Retention: Period - Lifetime, Responsibility - Modifications Supervisor

*Revision

0510K

Tennessee Valley Authority
Browns Ferry Nuclear Plant

NOV 10 1988

Form SDSP-26
SDSP-13.3
Page 4 of 5

ASME SECTION XI SUMMARY REPORT

Tennessee Valley Authority
Office of Nuclear Power, 1750 CST2-C
Browns Ferry Nuclear Plant Unit 2
P.O. Box 2000
Decatur, Alabama

Comm. Service Date 1974
System RHR 74
TVA Class A CLASS I
Workplan/MR No. A-177674

Furnish the following for the repair or replacement for the as-left condition of the component (after field work is complete). Mark all blanks (indicate NA for items which do not apply).

National Board Number of repaired or replaced component. N/A

Name of the components and description (include size, capacity, material, and location)—Theses requirements may be satisfied by attaching an applicable drawing.
RHR GATE VALVE, 24" STAINLESS STEEL, UNIT 2 REACTOR BLDG
INSIDE CLEAN ROOM, LOOP 1 RHR.

Name of Manufacturer WALWORTH COMPANY

Address of Manufacturer (if known) GREENSBURG, PA

Manufacturer's component identification numbers (i.e., serial number, subassembly number, heat number). If more than one component is replaced, attach weld map and identify items by item number.
VENDOR DWG # A-12334-M-3A, TVA CONTRACT 91750/90744.

Brief description of repair or replacement work performed, including conditions observed and corrective measures taken, as applicable (reference DCR, CAR, etc.; drawing may be attached with attached affected area circled).
REPLACE PRESSURE SEAL RING WITH A NEW ONE

Brief description of post repair or replacement tests and examinations (if required) by instruction or procedure number. NVT-1 OF NEW PRESS. SEAL RING

ANII/ANI name, employer, and business address THE HARTFORD STEAM BOILER INSPECTION AND INS. CO., ATLANTA, GA 30338
1117 PERIMETER CENTER WEST, SUITE E-301: ROOSEVELT RUSSELL JR.

Date work completed 9-19-86

Albert E. Cooke 6-6-88
Cognizant Engineer Date

Retention: Period - Lifetime; Responsibility - Modifications Supervisor

Tennessee Valley Authority
Browns Ferry Nuclear Plant

MAY 8 1984

ASME SECTION XI SUMMARY REPORT

SHEET 79 of 255

Plant RFNP
System HPCI - 73
TVA Class Class B, Class II
Workplan/MR No. A-177702

Furnish the following for the repair or replacement for the "as left" condition of the component (after field work is complete). Mark all blanks (indicate N/A for items which do not apply).

National Board Number of repaired or replaced component N/A

Name of the components and description (include size, capacity, material, and location)--These requirements may be satisfied by attaching an applicable drawing
10" wedge with #21 stellite seat; HPCI turbine isolation valve El. 519' HPCI Room

Name of Manufacturer Chapman Crane

Address of Manufacturer (if known) N/A

Manufacturer's component identification numbers (i.e., serial number, subassembly number, heat number, etc.) If more than one component is replaced, attach weld map and identify items by item number. ~~Ht # of weld rod~~ MRM 6-24-91
WEDGE FOR 2-FCV-73-16 WELD REPAIRED AND MACHINED

Brief description of repair or replacement work performed, including conditions observed and corrective measures taken, as applicable (Reference DCR, CAR, etc., drawing may be attached with affected area circled). Welded up cracked wedge seat & machined down

Brief description of post repair or replacement tests and examinations (if required) by instruction or procedure number N-VT-3, N-PT-1

ANI/ANII name, employer, and business address Roosevelt Russell
The Hartford Steam & Boiler Inspect & Ins
1117 Perimeter Center West, Suite E301, Atlanta GA 30338

Date work completed 5-26-88

C. W. Pratt / 5-26-88
Cognizant Engineer Date

Michael R. Manton 6-24-91

Retention: Period - Lifetime, Responsibility - OMM Supervisor

Tennessee Valley Authority
Browns Ferry Nuclear Plant

Form 164
BF 18.8
Page 4 of 4
MAY 8 1984
SHEET 80 of 255

ASME SECTION XI SUMMARY REPORT

Plant BFNP
System MAIN STEAM
TVA Class A, CLASS I
Workplan/MR No. A-177709
UNIT- 2
BFN-2-FCV-001-0038

Furnish the following for the repair or replacement for the "as left" condition of the component (after field work is complete). Mark all blanks (indicate N/A for items which do not apply).

National Board Number of repaired or replaced component NA

Name of the components and description (include size, capacity, material, and location)--These requirements may be satisfied by attaching an applicable drawing 2" STEM STAINLESS STEEL A-564 GR 630, A276 TYPE 304 FOR MSIV 1-38, "C" OUTBOARD

Name of Manufacturer Atwood Morrill

Address of Manufacturer (if known) 285 CANAL ST. SALEM MASS. 01970

Manufacturer's component identification numbers (i.e., serial number, subassembly number, heat number, etc.) If more than one component is replaced, attach weld map and identify items by item number. VENDOR DRAWING 20851-H ITEM #15 TVA DRAWING 47W 407-02 ITEM N.

Brief description of repair or replacement work performed, including conditions observed and corrective measures taken, as applicable (Reference DCR, CAR, etc., drawing may be attached with affected area circled). REPLACE 1¾" STEMS WITH 2" ANTIROTATION STEM BFN-2-FCV-001-0038

Brief description of post repair or replacement tests and examinations (if required) by instruction or procedure number N-VT-1, LLRT, TIMING, LEAKAGE (HYDRO) 4.7.A.2.6.3, SI 4.7.D.1.B.2, SI 3.3.1.A

ANI/ANII name, employer, and business address ROOSEVELT RUSSELL JR. THE HARTFORD STEAM BOILER INSPECTION AND INSURANCE CO. 1117 PERIMETER CENTER WEST, SUITE E-301, ATLANTA, GA 30338

Date work completed 8/1/87

Albert E. Cooke, 8/1/87
Cognizant Engineer Date

Michael K. Martin 6-17-91
Retention: Period - Lifetime, Responsibility - OMMM Supervisor

Tennessee Valley Authority
Browns Ferry Nuclear Plant

Form 164
BF 18.S
Page 4 of 4
MAY 8 1984

ASME SECTION XI SUMMARY REPORT

SHEET 81 of 255

Plant BFNP
System MAIN STEAM
TVA Class A CLASS I
Workplan/MR No. A-177110
UNIT 1-2
BFN-2-FCV-001-0026

Furnish the following for the repair or replacement for the "as left" condition of the component (after field work is complete). Mark all blanks (indicate N/A for items which do not apply).

National Board Number of repaired or replaced component N/A

Name of the components and description (include size, capacity, material, and location)--These requirements may be satisfied by attaching an applicable drawing 2" STEM STAINLESS STEEL A-564 GR630, A-276 TYPE 304 FOR MSIV 1-26 "B" INBOARD

Name of Manufacturer Atwood Morrill

Address of Manufacturer (if known) 285 CANAL ST. SALEM MASS. 01970

Manufacturer's component identification numbers (i.e., serial number, subassembly number, heat number, etc.) If more than one component is replaced, attach weld map and identify items by item number. VENDOR DWG 20851-H. ITEM #15
TVA DWG 47W407-2 ITEM "N"

Brief description of repair or replacement work performed, including conditions observed and corrective measures taken, as applicable (Reference DCR, CAR, etc., drawing may be attached with affected area circled). REPLACE 1¾" STEMS with 2" ANTIROTATION STEM
BFN-2-FCV-001-0026

Brief description of post repair or replacement tests and examinations (if required) by instruction or procedure number N-VT-1, LLRT, TIMING LEAKAGE (HYDRO) 47A2.6-3, SI 4.7.D.1-B2, SI 3.3.1-A

ANI/ANII name, employer, and business address ROOSEVELT RUSSELL, JR.
THE HARTFORD STEAM BOILER INSPECTION AND INSURANCE CO.
1117 PERIMETER CENTER WEST, SUITE E-301 ATLANTA, GA 30338

Date work completed 8/1/87

Robert E. Cooke 8/1/87
Cognizant Engineer Date

Michael R. Martin 6-17-91
Retention: Period - Lifetime, Responsibility - OMMM Supervisor

Tennessee Valley Authority
Browns Ferry Nuclear Plant

Form 164
BF 18.8
Page 4 of 4
MAY 8 1984

ASME SECTION XI SUMMARY REPORT

SHEET 82 of 255

Plant BFNP
System MAIN STEAM
TVA Class A CLASS I
Workplan/MR No. A-177711
UNIT-2
BFN-2-FCV-001-0037

Furnish the following for the repair or replacement for the "as left" condition of the component (after field work is complete). Mark all blanks (indicate N/A for items which do not apply).

National Board Number of repaired or replaced component NA

Name of the components and description (include size, capacity, material, and location)--These requirements may be satisfied by attaching an applicable drawing 2" STEM STAINLESS STEEL A-564 GR 630, A-276 TYPE 304 FOR MSIV 1-37, "C" INBOARD

Name of Manufacturer ATWOOD MORRILL

Address of Manufacturer (if known) 285 CANAL ST. SALEM MASS. 01970

Manufacturer's component identification numbers (i.e., serial number, subassembly number, heat number, etc.) If more than one component is replaced, attach weld map and identify items by item number. VENDOR DWG 20851-H ITEM #15 TVA DWG 47W401-02 ITEM N

Brief description of repair or replacement work performed, including conditions observed and corrective measures taken, as applicable (Reference DCR, CAR, etc., drawing may be attached with affected area circled). REPLACE 1 3/4" STEMS WITH 2" ANTIROTATION STEM

Brief description of post repair or replacement tests and examinations (if required) by instruction or procedure number N-VT-1, LLRT, TIMING LEAKAGE (HYdro) 47-A-2-6-3, SI 47-D-1-B-2, SI 3-3-1-A.

ANI/ANII name, employer, and business address THE HARTFORD STEAM BOILER INSPECTION AND INSURANCE CO. ATLANTA GA 30338
ROOSEVELT RUSSELL, JR. 1117 PERIMETER CENTER WEST, SUITE E-301

Date work completed 8-1-87

Albert E. Cooke / 8-1-87
Cognizant Engineer Date

Michael R. Martin 6-17-91

Retention: Period - Lifetime, Responsibility - OMNM Supervisor

Tennessee Valley Authority
Browns Ferry Nuclear Plant

Form 164
BF 18.8
Page 4 of 4
MAY 8 1984
SHEET 83 of 255

ASME SECTION XI SUMMARY REPORT

Plant BFNP (Unit 2)
System RCIC 71
TVA Class ASME SEC. III CLASS 2
~~Workplan~~/MR No. A-177717

Furnish the following for the repair or replacement for the "as left" condition of the component (after field work is complete). Mark all blanks (indicate N/A for items which do not apply).

National Board Number of repaired or replaced component N.A.

Name of the components and description (include size, capacity, material, and location)--These requirements may be satisfied by attaching an applicable drawing
BONNET FLANGE - 2" STOP CHECK GLOBE VALVE

Name of Manufacturer VELAN ENGINEERING CO.

Address of Manufacturer (if known) VELAN VALVE CORP.
AVENUE "C"
GRISWOLD INDUSTRIAL PARK
WILLISTON, VERMONT 05495

Manufacturer's component identification numbers (i.e., serial number, subassembly number, heat number, etc.) If more than one component is replaced, attach weld map and identify items by item number. VELAN DRAWING No. P-33160-8
FIGURE No. W8-084B-2TY TVA CONTRACT No. 90744/91750

Brief description of repair or replacement work performed, including conditions observed and corrective measures taken, as applicable (Reference DCR, CAR, etc., drawing may be attached with affected area circled). WELD BUILD-UP BONNET FLANGE TO ALLOW MACHINING O-RING GROOVE PER ECN P5213 (WP#3006-85)

Brief description of post repair or replacement tests and examinations (if required) by instruction or procedure number N-PT-1 + N-VT-3

ANI/ANII name, employer, and business address THE HARTFORD STEAM BOILER INSPECTION AND INSURANCE CO., ATLANTA, GA.

Date work completed 3-27-85

Doug J. Lee / 3-28-85
Cognizant Engineer Date

Retention: Period - Lifetime, Responsibility - OMMM Supervisor

Tennessee Valley Authority
Browns Ferry Nuclear Plant

Form 164
BF 18.8
Page 4 of 4
MAY 8 1984

ASME SECTION XI SUMMARY REPORT

SHEET 84 of 255

Plant B.F.N.P.
System HPCI 73
TVA Class SECTION III CLASS 2
~~Workplan~~/MR No. A-177721
UNIT-3
BFN-3-HCV-073-0024

Furnish the following for the repair or replacement for the "as left" condition of the component (after field work is complete). Mark all blanks (indicate N/A for items which do not apply).

National Board Number of repaired or replaced component N/A

Name of the components and description (include size, capacity, material, and location)--These requirements may be satisfied by attaching an applicable drawing
BONNET FLANGE - 2" STOP CHECK GLOBE VALVE

Name of Manufacturer VELAN ENGINEERING CO.

Address of Manufacturer (if known) WILLISTON, VERMONT

Manufacturer's component identification numbers (i.e., serial number, subassembly number, heat number, etc.) If more than one component is replaced, attach weld map and identify items by item number. VENDOR DRWG. No. P-33160-8
E.G. No. W8-084B-2TY TVA CONTRACT No. 90744/91750

Brief description of repair or replacement work performed, including conditions observed and corrective measures taken, as applicable (Reference DCR, CAR, etc., drawing may be attached with affected area circled). WELD REPAIR TEST CONNECTION MADE ON BONNET FLANGE PER EGN PS213 WP# 3006-85
BFN-3-HCV-073-0024

Brief description of post repair or replacement tests and examinations (if required) by instruction or procedure number N-PT-1 & N-VT-3

ANI/ANII name, employer, and business address THE HARTFORD STEAM BOILER INSPECTION AND INSURANCE CO., ATLANTA, GA

Date work completed 8/25/86

R.H. Thornhill 8/25/86
Cognizant Engineer Date

Michael R. Martin 6-17-91
Retention: Period - Lifetime, Responsibility - OMMM Supervisor

Tennessee Valley Authority
Browns Ferry Nuclear Plant

Form 164
BF 17.8

MAR 1 9 1985

ASME SECTION XI SUMMARY REPORT

SHEET 85 of 255

Plant BFNP (UNIT 2)
System MAIN STEAM
TVA Class A
~~Workplan~~/MR No. A-177762

Furnish the following for the repair or replacement for the as-left condition of the component (after field work is complete). Mark all blanks (indicate NA for items which do not apply).

National Board Number of repaired or replaced component. N/A

Name of the components and description (include size, capacity, material, and location)--These requirements may be satisfied by attaching an applicable drawing. TARGET ROCK 2 STAGE MODEL 756FF MAIN STEAM RELIEF VALVE (6"X10") TVA CLASS A, DESIGN PRESSURE 1250 psi, REACTOR BLDG. UNIT 2

Name of Manufacturer TARGET ROCK CORPORATION

Address of Manufacturer (if known) EAST FARMINGDALE, NEW YORK

Manufacturer's component identification numbers (i.e., serial number, subassembly number, heat number). If more than one component is replaced, attach weld map and identify items by item number. MSRV'S S/N S 1015, 1016, 1026, 1028, 1032, 1033, 1057, 1070, 184, 80, AND 68. MODEL 756FF

Brief description of repair or replacement work performed, including conditions observed and corrective measures taken, as applicable (reference DCR, CAR, etc.; drawing may be attached with affected area circled). REESTABLISH VENT AND SENSING PORT GASKET AREAS DIMENSIONS TO WITHIN TOLERANCES SPECIFIED BY THE MANUFACTURER.

Brief description of post repair or replacement tests and examinations (if required) by instruction or procedure number. N-VT-3, N-VT-1, N-PT-1 AND CERTIFIED SET PRESSURE TEST AND LEAKAGE TEST PER MMI-13 AND MMI-107

ANII/ANI name, employer, and business address ROOSEVELT RUSSELL, JR. THE HARTFORD STEAM BOILER INSPECTION AND INSURANCE CO. 1117 PERIMETER CENTER WEST, SUITE E-301, ATLANTA, GA. 30338

Date work completed March 26, 1987

Albert E. Cooke 3-28-87
Cognizant Engineer Date

Retention: Period - Lifetime, Responsibility - Modifications Supervisor

Tennessee Valley Authority
Browns Ferry Nuclear Plant

SHEET 86 of 255

Form 164
BF 18.8
Page 4 of
MAY 8 198

ASME SECTION XI SUMMARY REPORT

Unit 2 Cycle 5

Plant BFNP
System CS 1
TVA Class II
Workplan/MR No. 4179469

Furnish the following for the repair or replacement for the "as left" conditi the component (after field work is complete). Mark all blanks (indicate N/A items which do not apply).

National Board Number of repaired or replaced component NA

Name of the components and description (include size, capacity, material, and location)--These requirements may be satisfied by attaching an applicable draw
Core Spray support H-5 on 10"x14" reducing elbow

Name of Manufacturer Existing

Address of Manufacturer (if known) NA

Manufacturer's component identification numbers (i.e., serial number, subassemb number, heat number, etc.) If more than one component is replaced, attach weld. map and identify items by item number. NA

Brief description of repair or replacement work performed, including conditions observed and corrective measures taken, as applicable (Reference DCR, CAR, etc., drawing may be attached with affected area circled). Built up 1/4" weld it was undersized

Brief description of post repair or replacement tests and examinations (if requi by instruction or procedure number N-VT-2

ANI/ANII name, employer, and business address Roosevelt Russel / Bill Rice
Hartford Steam & Boiler Insp. Co.
Atlanta, Georgia 30338

Date work completed 5-14-85

J. Rosenblum 5-14-85
Cognizant Engineer Date

Retention: Period - Lifetime, Responsibility - OMMM Supervisor

TENNESSEE VALLEY AUTHORITY
BROWNS FERRY NUCLEAR PLANT
SITE DIRECTOR STANDARD PRACTICE

SEP 22 1989

FORM PAGE 1 OF
FORM SDSP-403
SDSP 13.3

FORM SDSP-403
FORM NIS-2 ATTACHMENT

SHEET 87 of 255

* REF CAQR# CHA890003713

1. (OWNER) TENNESSEE VALLEY AUTHORITY
NUCLEAR POWER

DATE 07/02/90

2. (PLANT) BROWNS FERRY NUCLEAR PLANT
P.O. BOX 2000
DECATUR, ALABAMA

SHEET [a] 1 OF 1

MR# 180284

3. WORK PERFORMED BY: TVA
COMPANY

TYPE CODE SYMBOL STAMP [b] N/A

PO BOX 2000
ADDRESS

AUTHORIZATION NO. [b] N/A

DECATUR ALABAMA
CITY AND STATE

EXPIRATION DATE [b] N/A

4. IDENTIFICATION OF SYSTEM SYSTEM-63

5(A). APPLICATION CONSTRUCTION CODE USAS B31.1.0 19 67
EDITION THRU ADDENDA N/A CODE CASE N/A

5(B). APPLICATION EDITION OF SECTION XI UTILIZED FOR REPAIRS OR REPLACEMENTS: 1980

6(A). NAME OF COMPONENT(S) AND DESCRIPTION (INCLUDE SIZE, CAPACITY, MATERIAL, AND LOCATION AS NEEDED TO AID IN IDENTIFICATION)
UNIT-2, EL-639'+1", NORTH OF QUINE, SPRING HANGER H-6
2-HGR-63-H-6

6(B). NAME OF MANUFACTURER UNKNOWN
ADDRESS OF MANUFACTURER (IF KNOWN) N/A

6(c). MANUFACTURER'S SERIAL NUMBER N/A

6(D). NATIONAL BOARD NUMBER (IF APPLICABLE) N/A

6(E). OTHER IDENTIFICATION (SUBASSEMBLY NUMBER, HEAT NUMBER, ETC.) N/A

6(F). YEAR BUILT UNKNOWN CODE CLASS ☐ 1 ☒ 2

6(G). REPAIRED ☐ REPLACED ☐ [c] REPLACEMENT ☒ [d]

6(H). ASME CODE STAMPED YES ☐ NO ☒

7. BRIEF DESCRIPTION OF REPAIR OR REPLACEMENT WORK PERFORMED
REMOVED ORIGINAL SPRING HANGER CANNISTER (ONLY) AND PLACED IT AT ANOTHER LOCATION IN UNIT-3 REINSTALLED NEW SPRING HANGER PER MR.

8. TESTS CONDUCTED: HYDROSTATIC ☐ PNEUMATIC ☐
NOMINAL OPERATING PRESSURE ☐ OTHER ☐
PRESSURE N/A PSI TEST TEMPERATURE N/A F°

9. REMARKS:

( ) APPLICABLE MANUFACTURERS DATA REPORT [e] TO BE ATTACHED.
RESPONSIBLE ENGR. R.W. AYCOCK / SYSTEMS DATE 07/02/90
ORGANIZATION

* ANII DATE

[a] SHEET NOS. FILLED IN BY TESTING AND DIAGNOSTIC PROGRAMS BRANCH.
[b] FOR WORK PERFORMED BY CERTIFICATE HOLDER
[c] REPLACED (LIKE OR EQUIVALENT).
[d] REPLACEMENT (MODIFICATION).
[e] WHEN REQUIRED BY CONSTRUCTION CODE.

RETENTION PERIOD: LIFETIME RESPONSIBLE ORGANIZATION: NM-PROCESSES/SPECIAL PROGRAMS

3484 2674

TENNESSEE VALLEY AUTHORITY
BROWNS FERRY NUCLEAR PLANT
SITE DIRECTOR STANDARD PRACTICE

SEP 22 1989

FORM PAGE 1 OF 1
FORM SDSP-403
SDSP 13.3

FORM SDSP-403
FORM NIS-2 ATTACHMENT

1. (OWNER) TENNESSEE VALLEY AUTHORITY
NUCLEAR POWER — DATE 5-16-90

2. (PLANT) BROWNS FERRY NUCLEAR PLANT
P.O. BOX 2000
DECATUR, ALABAMA — SHEET [a] 88 OF 255

MR# 181305

3. WORK PERFORMED BY: TVA (COMPANY) — TYPE CODE SYMBOL STAMP [b] N/A
P.O. Box 2000 (ADDRESS) — AUTHORIZATION NO. [b] N/A
Decatur, ALA (CITY AND STATE) — EXPIRATION DATE [b] N/A

4. IDENTIFICATION OF SYSTEM 74/RHR

5(A). APPLICATION CONSTRUCTION CODE ASME SECT III CLASS 19 67
EDITION NA ADDENDA NA CODE CASE NA

5(B). APPLICATION EDITION OF SECTION XI UTILIZED FOR REPAIRS OR REPLACEMENTS: 1980

6(A). NAME OF COMPONENT(S) AND DESCRIPTION (INCLUDE SIZE, CAPACITY, MATERIAL, AND LOCATION AS NEEDED TO AID IN IDENTIFICATION)
RHR HEAT EXCHANGER -2B

6(B). NAME OF MANUFACTURER Perfex
ADDRESS OF MANUFACTURER (IF KNOWN) Berlin Wisconsin

6(c). MANUFACTURER'S SERIAL NUMBER N/A

6(D). NATIONAL BOARD NUMBER (IF APPLICABLE) N/A

6(E). OTHER IDENTIFICATION (SUBASSEMBLY NUMBER, HEAT NUMBER, ETC.) N/A

6(F). YEAR BUILT 1967 CODE CLASS ☐ 1 ☒ 2

6(G). REPAIRED ☒ REPLACED ☐ [c] REPLACEMENT ☐ [d]

6(H). ASME CODE STAMPED YES ☐ NO ☒

7. BRIEF DESCRIPTION OF REPAIR OR REPLACEMENT WORK PERFORMED.
Repair linear indication

8. TESTS CONDUCTED: HYDROSTATIC ☐ PNEUMATIC ☐
NOMINAL OPERATING PRESSURE ☐ OTHER ☐
PRESSURE N/A PSI TEST TEMPERATURE N/A F°

9. REMARKS: Repair per memo L29 841224 827

( ) APPLICABLE MANUFACTURERS DATA REPORT [e] TO BE ATTACHED. Michael R. Martin 7-3-91
RESPONSIBLE ENGR. Michael Thomas / Sys Eng DATE 5-16-90
ORGANIZATION

ANII _____ DATE _____

[a] SHEET NOS. FILLED IN BY TESTING AND DIAGNOSTIC PROGRAMS BRANCH.
[b] FOR WORK PERFORMED BY CERTIFICATE HOLDER
[c] REPLACED (LIKE OR EQUIVALENT).
[d] REPLACEMENT (MODIFICATION).
[e] WHEN REQUIRED BY CONSTRUCTION CODE.

RETENTION PERIOD: LIFETIME RESPONSIBLE ORGANIZATION: NM-PROCESSES/SPECIAL PROGRAMS

3484 2658

TENNESSEE VALLEY AUTHORITY
BROWNS FERRY NUCLEAR PLANT
SITE DIRECTOR STANDARD PRACTICE

SEP 22 1989

FORM PAGE 1 OF 1
FORM SDSP-403
SDSP 13.3

FORM SDSP-403
FORM NIS-2 ATTACHMENT

1. (OWNER) TENNESSEE VALLEY AUTHORITY
NUCLEAR POWER

DATE 5-16-90

2. (PLANT) BROWNS FERRY NUCLEAR PLANT
P.O. BOX 2000
DECATUR, ALABAMA

SHEET [a] 89 OF 255

MR# 181306

3. WORK PERFORMED BY: TVA (COMPANY)
P.O. Box 2000 (ADDRESS)
DECATUR, ALA (CITY AND STATE)

TYPE CODE SYMBOL STAMP [b] N/A
AUTHORIZATION NO. [b] N/A
EXPIRATION DATE [b] N/A

4. IDENTIFICATION OF SYSTEM RHR/74

5(A). APPLICATION CONSTRUCTION CODE ASME SECT III CL "C" 19 67
EDITION NA ADDENDA NA CODE CASE NA

5(B). APPLICATION EDITION OF SECTION XI UTILIZED FOR REPAIRS OR REPLACEMENTS: 1980

6(A). NAME OF COMPONENT(S) AND DESCRIPTION (INCLUDE SIZE, CAPACITY, MATERIAL, AND LOCATION AS NEEDED TO AID IN IDENTIFICATION)
RHR HTX-2A

6(B). NAME OF MANUFACTURER Perfex
ADDRESS OF MANUFACTURER (IF KNOWN) Berlin, Wisconsin

6(c). MANUFACTURER'S SERIAL NUMBER N/A

6(D). NATIONAL BOARD NUMBER (IF APPLICABLE) N/A

6(E). OTHER IDENTIFICATION (SUBASSEMBLY NUMBER, HEAT NUMBER, ETC.) N/A

6(F). YEAR BUILT 1967 CODE CLASS ☐ 1 ☒ 2

6(G). REPAIRED ☒ REPLACED ☐ [c] REPLACEMENT ☐ [d]

6(H). ASME CODE STAMPED YES ☐ NO ☒

7. BRIEF DESCRIPTION OF REPAIR OR REPLACEMENT WORK PERFORMED.
Repair linear indication on RHR6-8 6 NOT SHOWN

8. TESTS CONDUCTED: HYDROSTATIC ☐ PNEUMATIC ☐
NOMINAL OPERATING PRESSURE ☐ OTHER ☐
PRESSURE N/A PSI TEST TEMPERATURE N/A F°

9. REMARKS: Repair per Memo L29 841224 827

( ) APPLICABLE MANUFACTURERS DATA REPORT [e] TO BE ATTACHED.
RESPONSIBLE ENGR. Michael R. Martin 7-3-91 Michael Thomson / Sys Eng DATE 5-16-90
ORGANIZATION

ANII _____ DATE _____

[a] SHEET NOS. FILLED IN BY TESTING AND DIAGNOSTIC PROGRAMS BRANCH.
[b] FOR WORK PERFORMED BY CERTIFICATE HOLDER
[c] REPLACED (LIKE OR EQUIVALENT).
[d] REPLACEMENT (MODIFICATION).
[e] WHEN REQUIRED BY CONSTRUCTION CODE.

RETENTION PERIOD: LIFETIME RESPONSIBLE ORGANIZATION: NM-PROCESSES/SPECIAL PROGRAMS

3484 2549

TENNESSEE VALLEY AUTHORITY
BROWNS FERRY NUCLEAR PLANT
SITE DIRECTOR STANDARD PRACTICE

SEP 22 1989

FORM PAGE 1 OF 1
FORM SDSP-403
SDSP 13.3

FORM SDSP-403
FORM NIS-2 ATTACHMENT

1. (OWNER) TENNESSEE VALLEY AUTHORITY
NUCLEAR POWER

DATE 5-16-90

2. (PLANT) BROWNS FERRY NUCLEAR PLANT
P.O. BOX 2000
DECATUR, ALABAMA

SHEET [a] 90 OF 255

MR# 181307

3. WORK PERFORMED BY: TVA (COMPANY)
P.O. Box 2000 (ADDRESS)
DECATUR, ALA (CITY AND STATE)

TYPE CODE SYMBOL STAMP [b] N/A
AUTHORIZATION NO. [b] N/A
EXPIRATION DATE [b] N/A

4. IDENTIFICATION OF SYSTEM 74/RHR

5(A). APPLICATION CONSTRUCTION CODE ASME SECT III CL "C" 19 67
EDITION NA ADDENDA NA CODE CASE NA

5(B). APPLICATION EDITION OF SECTION XI UTILIZED FOR REPAIRS OR REPLACEMENTS: 1980

6(A). NAME OF COMPONENT(S) AND DESCRIPTION (INCLUDE SIZE, CAPACITY, MATERIAL, AND LOCATION AS NEEDED TO AID IN IDENTIFICATION)
RHR HEAT EXCHANGER 2C

6(B). NAME OF MANUFACTURER DEFFEX
ADDRESS OF MANUFACTURER (IF KNOWN) BERLIN, WISCONSIN

6(C). MANUFACTURER'S SERIAL NUMBER N/A

6(D). NATIONAL BOARD NUMBER (IF APPLICABLE) N/A

6(E). OTHER IDENTIFICATION (SUBASSEMBLY NUMBER, HEAT NUMBER, ETC.) N/A

6(F). YEAR BUILT 1967 CODE CLASS ☐ 1 ☒ 2

6(G). REPAIRED ☒ REPLACED ☐ [c] REPLACEMENT ☐ [d]

6(H). ASME CODE STAMPED YES ☐ NO ☒

7. BRIEF DESCRIPTION OF REPAIR OR REPLACEMENT WORK PERFORMED
Repair linear indication per memo. L29 841224 827 on RHR6-862C
MR 3-90

8. TESTS CONDUCTED: HYDROSTATIC ☐ PNEUMATIC ☐
NOMINAL OPERATING PRESSURE ☐ OTHER ☐
PRESSURE N/A PSI TEST TEMPERATURE N/A F°

9. REMARKS:

( ) APPLICABLE MANUFACTURERS DATA REPORT [e] TO BE ATTACHED. Michael K. Martin 7-3-91
RESPONSIBLE ENGR. Michael Thomason / Sys Eng. DATE 5-16-90
ORGANIZATION

ANII _____ DATE _____

[a] SHEET NOS. FILLED IN BY TESTING AND DIAGNOSTIC PROGRAMS BRANCH.
[b] FOR WORK PERFORMED BY CERTIFICATE HOLDER
[c] REPLACED (LIKE OR EQUIVALENT).
[d] REPLACEMENT (MODIFICATION).
[e] WHEN REQUIRED BY CONSTRUCTION CODE.

RETENTION PERIOD: LIFETIME RESPONSIBLE ORGANIZATION: NM-PROCESSES/SPECIAL PROGRAMS

2

3484 2666

TENNESSEE VALLEY AUTHORITY
BROWNS FERRY NUCLEAR PLANT
SITE DIRECTOR STANDARD PRACTICE

SEP 22 1989

FORM PAGE 1 OF 1
FORM SDSP-403
SDSP 13.3

FORM SDSP-403
FORM NIS-2 ATTACHMENT

1. (OWNER) TENNESSEE VALLEY AUTHORITY
NUCLEAR POWER

DATE 5-16-90

2. (PLANT) BROWNS FERRY NUCLEAR PLANT
P.O. BOX 2000
DECATUR, ALABAMA

SHEET [a] 91 OF 255

MR# 181313

3. WORK PERFORMED BY: TVA (COMPANY)
P.O. Box 2000 (ADDRESS)
DECATUR, ALA (CITY AND STATE)

TYPE CODE SYMBOL STAMP [b] N/A
AUTHORIZATION NO. [b] N/A
EXPIRATION DATE [b] N/A

4. IDENTIFICATION OF SYSTEM 74/RHR

5(A). APPLICATION CONSTRUCTION CODE ASME SECT III CL 2 19 67
EDITION NA ADDENDA NA CODE CASE NA

5(B). APPLICATION EDITION OF SECTION XI UTILIZED FOR REPAIRS OR REPLACEMENTS: 1980

6(A). NAME OF COMPONENT(S) AND DESCRIPTION (INCLUDE SIZE, CAPACITY, MATERIAL, AND LOCATION AS NEEDED TO AID IN IDENTIFICATION)
RHR HTX-2B

6(B). NAME OF MANUFACTURER Perfex
ADDRESS OF MANUFACTURER (IF KNOWN) Beloit, Wisconsin

6(c). MANUFACTURER'S SERIAL NUMBER NA

6(D). NATIONAL BOARD NUMBER (IF APPLICABLE) N/A

6(E). OTHER IDENTIFICATION (SUBASSEMBLY NUMBER, HEAT NUMBER, ETC.) N/A

6(F). YEAR BUILT 1967 CODE CLASS ☐ 1 ☒ 2

6(G). REPAIRED ☒ REPLACED ☐ [d] REPLACEMENT ☐ [d]

6(H). ASME CODE STAMPED YES ☐ NO ☒

7. BRIEF DESCRIPTION OF REPAIR OR REPLACEMENT WORK PERFORMED.
Repair of linear indication on RHR-5-2B

8. TESTS CONDUCTED: HYDROSTATIC ☐ PNEUMATIC ☐
NOMINAL OPERATING PRESSURE ☐ OTHER ☐
PRESSURE N/A PSI TEST TEMPERATURE N/A F°

9. REMARKS: Repair per memo L29 841224 829

( ) APPLICABLE MANUFACTURERS DATA REPORT [e] TO BE ATTACHED. Michael R. Manton 7-3-91
RESPONSIBLE ENGR. Michael Thomson / Sys Eng. DATE 5-16-90
ORGANIZATION

ANII _____ DATE _____

[a] SHEET NOS. FILLED IN BY TESTING AND DIAGNOSTIC PROGRAMS BRANCH.
[b] FOR WORK PERFORMED BY CERTIFICATE HOLDER
[c] REPLACED (LIKE OR EQUIVALENT).
[d] REPLACEMENT (MODIFICATION).
[e] WHEN REQUIRED BY CONSTRUCTION CODE.

RETENTION PERIOD: LIFETIME RESPONSIBLE ORGANIZATION: NM-PROCESSES/SPECIAL PROGRAMS

3484 2642

TENNESSEE VALLEY AUTHORITY
BROWNS FERRY NUCLEAR PLANT
SITE DIRECTOR STANDARD PRACTICE

SEP 22 1989

FORM PAGE 1 OF 1
FORM SDSP-403
SDSP 13.3

FORM SDSP-403
FORM NIS-2 ATTACHMENT

1. (OWNER) TENNESSEE VALLEY AUTHORITY
NUCLEAR POWER

DATE 5-15-90

2. (PLANT) BROWNS FERRY NUCLEAR PLANT
P.O. BOX 2000
DECATUR, ALABAMA

SHEET [a] 92 OF 255

MR# 181314

3. WORK PERFORMED BY: TVA (COMPANY)
P.O. Box 2000 (ADDRESS)
DECATUR, ALA (CITY AND STATE)

TYPE CODE SYMBOL STAMP [b] N/A
AUTHORIZATION NO. [b] N/A
EXPIRATION DATE [b] N/A

4. IDENTIFICATION OF SYSTEM RHR/74

5(A). APPLICATION CONSTRUCTION CODE ASME SECT III, CL C 19 67
EDITION NA ADDENDA NA CODE CASE NA

5(B). APPLICATION EDITION OF SECTION XI UTILIZED FOR REPAIRS OR REPLACEMENTS: 1980

6(A). NAME OF COMPONENT(S) AND DESCRIPTION (INCLUDE SIZE, CAPACITY, MATERIAL, AND LOCATION AS NEEDED TO AID IN IDENTIFICATION)
RHR HEAT EXCHANGER 2D

6(B). NAME OF MANUFACTURER REFEX
ADDRESS OF MANUFACTURER (IF KNOWN) BERLIN, WISCONSIN

6(c). MANUFACTURER'S SERIAL NUMBER NA

6(D). NATIONAL BOARD NUMBER (IF APPLICABLE) NA

6(E). OTHER IDENTIFICATION (SUBASSEMBLY NUMBER, HEAT NUMBER, ETC.) NA

6(F). YEAR BUILT 1967 CODE CLASS ☐ 1 ☒ 2

6(G). REPAIRED ☒ REPLACED ☐ [c] REPLACEMENT ☐ [d]

6(H). ASME CODE STAMPED YES ☐ NO ☒

7. BRIEF DESCRIPTION OF REPAIR OR REPLACEMENT WORK PERFORMED.
Repair linear indication on RHR 5-5-2D

8. TESTS CONDUCTED: HYDROSTATIC ☐ PNEUMATIC ☐
NOMINAL OPERATING PRESSURE ☐ OTHER ☐
PRESSURE NA PSI TEST TEMPERATURE NA F°

9. REMARKS: Repair per letter (MEMO L29 841224 827

( ) APPLICABLE MANUFACTURERS DATA REPORTS TO BE ATTACHED. Michael R. Marston 7-3-91
RESPONSIBLE ENGR. Michael Hanson / Sys Eng DATE 5-15-90
ORGANIZATION

ANII _____ DATE _____

[a] SHEET NOS. FILLED IN BY TESTING AND DIAGNOSTIC PROGRAMS BRANCH.
[b] FOR WORK PERFORMED BY CERTIFICATE HOLDER
[c] REPLACED (LIKE OR EQUIVALENT).
[d] REPLACEMENT (MODIFICATION).
[e] WHEN REQUIRED BY CONSTRUCTION CODE.

RETENTION PERIOD: LIFETIME RESPONSIBLE ORGANIZATION: NM-PROCESSES/SPECIAL PROGRAMS

3484 2650

TENNESSEE VALLEY AUTHORITY
BROWNS FERRY NUCLEAR PLANT
SITE DIRECTOR STANDARD PRACTICE

SEP 22 1989

FORM PAGE 1 OF 1
FORM SDSP-403
SDSP 13.3

FORM SDSP-403
FORM NIS-2 ATTACHMENT

1. (OWNER) TENNESSEE VALLEY AUTHORITY
NUCLEAR POWER

DATE 5-15-90

2. (PLANT) BROWNS FERRY NUCLEAR PLANT
P.O. BOX 2000
DECATUR, ALABAMA

SHEET [a] 93 OF 255

6-14-90 ~~MR#~~ MR# 181315

3. WORK PERFORMED BY: TVA (COMPANY)
P.O. Box 2000 (ADDRESS)
DECATUR, ALA (CITY AND STATE)

TYPE CODE SYMBOL STAMP [b] N/A
AUTHORIZATION NO. [b] N/A
EXPIRATION DATE [b] N/A

4. IDENTIFICATION OF SYSTEM RHR/74

5(A). APPLICATION CONSTRUCTION CODE ASME Sect III Cl "C" 19 67
EDITION NA ADDENDA NA CODE CASE NA

5(B). APPLICATION EDITION OF SECTION XI UTILIZED FOR REPAIRS OR REPLACEMENTS: 1980

6(A). NAME OF COMPONENT(S) AND DESCRIPTION (INCLUDE SIZE, CAPACITY, MATERIAL, AND LOCATION AS NEEDED TO AID IN IDENTIFICATION)
RHR HEAT EXCHANGER 2A

6(B). NAME OF MANUFACTURER PERFEX
ADDRESS OF MANUFACTURER (IF KNOWN) BERLIN, WISCONSIN

6(C). MANUFACTURER'S SERIAL NUMBER N/A

6(D). NATIONAL BOARD NUMBER (IF APPLICABLE) N/A

6(E). OTHER IDENTIFICATION (SUBASSEMBLY NUMBER, HEAT NUMBER, ETC.) NA

6(F). YEAR BUILT 1967 CODE CLASS ☐ 1 ☒ 2

6(G). REPAIRED ☒ REPLACED ☐ [c] REPLACEMENT ☐ [d]

6(H). ASME CODE STAMPED YES ☐ NO ☒

7. BRIEF DESCRIPTION OF REPAIR OR REPLACEMENT WORK PERFORMED.
Repair linear PT indication at RHRG-5

8. TESTS CONDUCTED: HYDROSTATIC ☐ PNEUMATIC ☐
NOMINAL OPERATING PRESSURE ☐ OTHER ☐
PRESSURE N/A PSI TEST TEMPERATURE N/A F°

9. REMARKS: Repair per memo L29 841224 827

( ) APPLICABLE MANUFACTURERS DATA REPORT [e] TO BE ATTACHED. Michael R. Marston 7-3-91
RESPONSIBLE ENGR. Michael Hemmer Sys Eng DATE 5-15-90
ORGANIZATION

ANII _____ DATE _____

[a] SHEET NOS. FILLED IN BY TESTING AND DIAGNOSTIC PROGRAMS BRANCH.
[b] FOR WORK PERFORMED BY CERTIFICATE HOLDER
[c] REPLACED (LIKE OR EQUIVALENT).
[d] REPLACEMENT (MODIFICATION).
[e] WHEN REQUIRED BY CONSTRUCTION CODE.

RETENTION PERIOD: LIFETIME RESPONSIBLE ORGANIZATION: NM-PROCESSES/SPECIAL PROGRAMS

3484 2634

TENNESSEE VALLEY AUTHORITY
BROWNS FERRY NUCLEAR PLANT
SITE DIRECTOR STANDARD PRACTICE

SEP 22 1989

FORM PAGE 1 OF 1
FORM SDSP-403
SDSP 13.3

FORM SDSP-403
FORM NIS-2 ATTACHMENT

1. (OWNER) TENNESSEE VALLEY AUTHORITY
NUCLEAR POWER

DATE 5-16-90

2. (PLANT) BROWNS FERRY NUCLEAR PLANT
P.O. BOX 2000
DECATUR, ALABAMA

SHEET [a] 94 OF 255

MR# 181316

3. WORK PERFORMED BY: TVA (COMPANY)
P.O. Box 2000 (ADDRESS)
DECATUR, ALA. (CITY AND STATE)

TYPE CODE SYMBOL STAMP [b] N/A
AUTHORIZATION NO. [b] N/A
EXPIRATION DATE [b] N/A

4. IDENTIFICATION OF SYSTEM 74/RHR

5(A). APPLICATION CONSTRUCTION CODE ASME SECT III CL "C" 19 67
EDITION NA ADDENDA NA CODE CASE NA

5(B). APPLICATION EDITION OF SECTION XI UTILIZED FOR REPAIRS OR REPLACEMENTS: 1980

6(A). NAME OF COMPONENT(S) AND DESCRIPTION (INCLUDE SIZE, CAPACITY, MATERIAL, AND LOCATION AS NEEDED TO AID IN IDENTIFICATION)
RHR HT EX-2C

6(B). NAME OF MANUFACTURER Perfex
ADDRESS OF MANUFACTURER (IF KNOWN) Berlin, Wisconsin

6(c). MANUFACTURER'S SERIAL NUMBER N/A

6(D). NATIONAL BOARD NUMBER (IF APPLICABLE) N/A

6(E). OTHER IDENTIFICATION (SUBASSEMBLY NUMBER, HEAT NUMBER, ETC.) N/A

6(F). YEAR BUILT 1967 CODE CLASS ☐ 1 ☒ 2

6(G). REPAIRED ☒ REPLACED ☐ [c] REPLACEMENT ☐ [d]

6(H). ASME CODE STAMPED YES ☐ NO ☒

7. BRIEF DESCRIPTION OF REPAIR OR REPLACEMENT WORK PERFORMED.
Repair linear indication of RHR HT Ex 2C

8. TESTS CONDUCTED: HYDROSTATIC ☐ PNEUMATIC ☐
NOMINAL OPERATING PRESSURE ☐ OTHER ☐
PRESSURE N/A PSI TEST TEMPERATURE N/A F°

9. REMARKS: Repair per memo L29 841224 827

( ) APPLICABLE MANUFACTURERS DATA REPORT [e] TO BE ATTACHED. Michael R. Manton 7-3-91
RESPONSIBLE ENGR. Michael Thomas / Sr Eng DATE 5-16-90
ORGANIZATION

ANII _____ DATE _____

[a] SHEET NOS. FILLED IN BY TESTING AND DIAGNOSTIC PROGRAMS BRANCH.
[b] FOR WORK PERFORMED BY CERTIFICATE HOLDER
[c] REPLACED (LIKE OR EQUIVALENT).
[d] REPLACEMENT (MODIFICATION).
[e] WHEN REQUIRED BY CONSTRUCTION CODE.

RETENTION PERIOD: LIFETIME RESPONSIBLE ORGANIZATION: NM-PROCESSES/SPECIAL PROGRAMS

TENNESSEE VALLEY AUTHORITY
BROWNS FERRY NUCLEAR PLANT
SITE DIRECTOR STANDARD PRACTICE

SEP 22 1989

FORM SDSP-403
FORM NIS-2 ATTACHMENT

1. (OWNER) TENNESSEE VALLEY AUTHORITY
NUCLEAR POWER

DATE 5/19/90

2. (PLANT) BROWNS FERRY NUCLEAR PLANT
P.O. BOX 2000
DECATUR, ALABAMA

SHEET [a] 95 OF 255

MR# 181676

3. WORK PERFORMED BY: TVA
COMPANY
P.O. BOX 2000
ADDRESS
DECATUR AL
CITY AND STATE

TYPE CODE SYMBOL STAMP [b] N/A
AUTHORIZATION NO. [b] N/A
EXPIRATION DATE [b] N/A

4. IDENTIFICATION OF SYSTEM 74 - RHR

5(A). APPLICATION CONSTRUCTION CODE ANSI B31.1 19 67
EDITION 67 ADDENDA N/A CODE CASE N/A

5(B). APPLICATION EDITION OF SECTION XI UTILIZED FOR REPAIRS OR REPLACEMENTS: 1980

6(A). NAME OF COMPONENT(S) AND DESCRIPTION (INCLUDE SIZE, CAPACITY, MATERIAL, AND LOCATION AS NEEDED TO AID IN IDENTIFICATION)
2-FCV-74-57 Walworth 18" Gate Valve, Model # 5206WE
Walworth DWG # A-12330-M-1-D GE ID No. 10-39

6(B). NAME OF MANUFACTURER WALWORTH Co.
ADDRESS OF MANUFACTURER (IF KNOWN) N/A

6(c). MANUFACTURER'S SERIAL NUMBER N/A

6(D). NATIONAL BOARD NUMBER (IF APPLICABLE) N/A

6(E). OTHER IDENTIFICATION (SUBASSEMBLY NUMBER, HEAT NUMBER, ETC.)
Contract # 90744(1.3.1-1.D(4)) P.O. # H1445

6(F). YEAR BUILT N/A CODE CLASS ☐ 1 ☒ 2

6(G). REPAIRED ☒ REPLACED ☐ [c] REPLACEMENT ☐ [d]

6(H). ASME CODE STAMPED YES ☐ NO ☒

7. BRIEF DESCRIPTION OF REPAIR OR REPLACEMENT WORK PERFORMED.
WELD BUILDUP OF RIB GUIDE ON VALVE 2-FCV-74-57

8. TESTS CONDUCTED: HYDROSTATIC ☐ PNEUMATIC ☐
NOMINAL OPERATING PRESSURE ☐ OTHER ☒
PRESSURE _____ PSI TEST TEMPERATURE _____ F°

9. REMARKS: 2-SI-4.7.A.2.9-3/74b, 2-SI-4.5.B.1.C-1

( ) APPLICABLE MANUFACTURERS DATA REPORT [e] TO BE ATTACHED.
RESPONSIBLE ENGR. Pillette Cooke / Mech. Maint DATE 5/19/90
* ORGANIZATION
ANII _____ DATE _____

* REF. CAQRA CHA 0003713

[a] SHEET NOS. FILLED IN BY TESTING AND DIAGNOSTIC PROGRAMS BRANCH.
[b] FOR WORK PERFORMED BY CERTIFICATE HOLDER
[c] REPLACED (LIKE OR EQUIVALENT).
[d] REPLACEMENT (MODIFICATION).
[e] WHEN REQUIRED BY CONSTRUCTION CODE.

RETENTION PERIOD: LIFETIME RESPONSIBLE ORGANIZATION: NM-PROCESSES/SPECIAL PROGRAMS

Tennessee Valley Authority
Browns Ferry Nuclear Plant

Form 164
BF 17.8
Page 4 of 5
MAR 19 1985
SHEET 96 of 255

ASME SECTION XI SUMMARY REPORT

Plant B.F.N.P.
System MAIN STEAM
TVA Class I
~~Workplan~~/MR No. A-182061

Furnish the following for the repair or replacement for the as-left condition of the component (after field work is complete). Mark all blanks (indicate NA for items which do not apply).

National Board Number of repaired or replaced component. N/A

Name of the components and description (include size, capacity, material, and location)--These requirements may be satisfied by attaching an applicable drawing. TARGET ROCK MODEL 7567F MAIN STEAM RELIEF VALVE (6" X 10") TVA CLASS A, DESIGN PRESSURE 1250 psig. REACTOR Bldg (Spares)

Name of Manufacturer TARGET ROCK CORPORATION

Address of Manufacturer (if known) FARMINGDALE, NY.

Manufacturer's component identification numbers (i.e., serial number, subassembly number, heat number). If more than one component is replaced, attach weld map and identify items by item number. MSRV S/N 68 (Body) MODEL 7567F 2-STage Generic Design.

Brief description of repair or replacement work performed, including conditions observed and corrective measures taken, as applicable (reference DCR, CAR, etc.; drawing may be attached with affected area circled). PERFORM A FULL FACE SKIM CUT ON the BASE TO BODY FLANGE TO Remove Pits FOUND IN the gasket SEATING SURFACE.

Brief description of post repair or replacement tests and examinations (if required) by instruction or procedure number. N-VT-3, N-PT-1

ANII/ANI name, employer, and business address ROOSEVELT RUSSELL, JR. The HARTFORD STEAM BOILER INSPECTION AND INSURANCE CO. 1117 PERIMETER CENTER WEST, Suite E-301, ATLANTA, GA.

Date work completed 8-1-87

Albert E. Cooke / 8/1/87
Cognizant Engineer Date

Retention: Period - Lifetime, Responsibility - Modifications Supervisor

Tennessee Valley Authority
Browns Ferry Nuclear Plant

SHEET 96a of 255

Form 164
BF 18.8
Page 4 of 4
MAY 8 1984

ASME SECTION XI SUMMARY REPORT

Unit 2 Cycle 5

Plant BFNP
System RHR
TVA Class I
Workplan (MR) No. A-185060

Furnish the following for the repair or replacement for the "as left" condition of the component (after field work is complete). Mark all blanks (indicate N/A for items which do not apply).

National Board Number of repaired or replaced component NA

Name of the components and description (include size, capacity, material, and location)--These requirements may be satisfied by attaching an applicable drawing
7/8" stud & nuts (SA194 GR 2H NUTS) (SA193 GR B7 Studs)
On valve 2-FCV-74-54 inside drywell 1st elevation

Name of Manufacturer Studs - R.E.C. Corp.; Nuts - Cardinal
Cardinal - 5200 Harvard Ave Cleveland, OH 44105

Address of Manufacturer (if known) REC Corp. - New Rochelle, NY 10801

Manufacturer's component identification numbers (i.e., serial number, subassembly number, heat number, etc.) If more than one component is replaced, attach weld map and identify items by item number. Studs - Ht # 90190
Nuts - Ht # 2K30661

Brief description of repair or replacement work performed, including conditions observed and corrective measures taken, as applicable (Reference DCR, CAR, etc., drawing may be attached with affected area circled). Replaced flange studs and nuts on valve 2-FCV-74-54

Brief description of post repair or replacement tests and examinations (if required) by instruction or procedure number N-VT-1, LLRT per SI 4.7.A.2.g, Hydro test per SI 3.3.1.a, ~~Leak~~ Leak per SI 3.2.2

ANI/ANII name, employer, and business address Roosevelt Russell
Hartford Boiler and Inspection Co.
Atlanta, GA 30338

Date work completed 1-15-85

J. Rawlins 1-15-85
Cognizant Engineer Date

Retention: Period - Lifetime, Responsibility - OMNM Supervisor

ASME SECTION XI SUMMARY REPORT

Plant BFNP (unit 2)
System 69/RWCU
TVA Class B
Workplan/MR No. A-183066

Furnish the following for the repair or replacement for the as-left condition of the component (after field work is complete). Mark all blanks (indicate NA for items which do not apply).

National Board Number of repaired or replaced component. N/A

Name of the components and description (include size, capacity, material, and location)--These requirements may be satisfied by attaching an applicable drawing. 6" ϕ Stainless steel RWCU long radius elbow and short sections of adjacent pipe located in the drywell at approximately ELEV. 607'-6"

Name of Manufacturer N/A

Address of Manufacturer (if known) N/A

Manufacturer's component identification numbers (i.e., serial number, subassembly number, heat number). If more than one component is replaced, attach weld map and identify items by item number. SEE WELD MAP.

Brief description of repair or replacement work performed, including conditions observed and corrective measures taken, as applicable (reference DCR, CAR, etc.; drawing may be attached with affected area circled). Due to the Intergranular Stress Corrosion Cracking in weld DRWC-2-4, the affected long radius elbow and short sections of adjacent pipe were replaced. The Heat-Sink welding process was used in implementing the work.

Brief description of post repair or replacement tests and examinations (if required) by instruction or procedure number. Pressure boundary welds inspected per N-VT-3, N-RT-1 N-PT-1, BF-UT-17 AND BF-UT-25. Structural welds inspected per N-VT-2 and support installations verified by MAI-23. HYDROSTATIC TEST - BF 76013

ANII/ANI name, employer, and business address The Hartford Steam Boiler Inspection & Insurance Co., 1117 Perimeter Center West, Suite E301, Atlanta, Ga. 30338

Date work completed 9-16-86

Jeffery L. McCabe / 9-16-86
Cognizant Engineer Date

Retention: Period - Lifetime, Responsibility - Modifications Supervisor

WELD MAP
(PIPING)

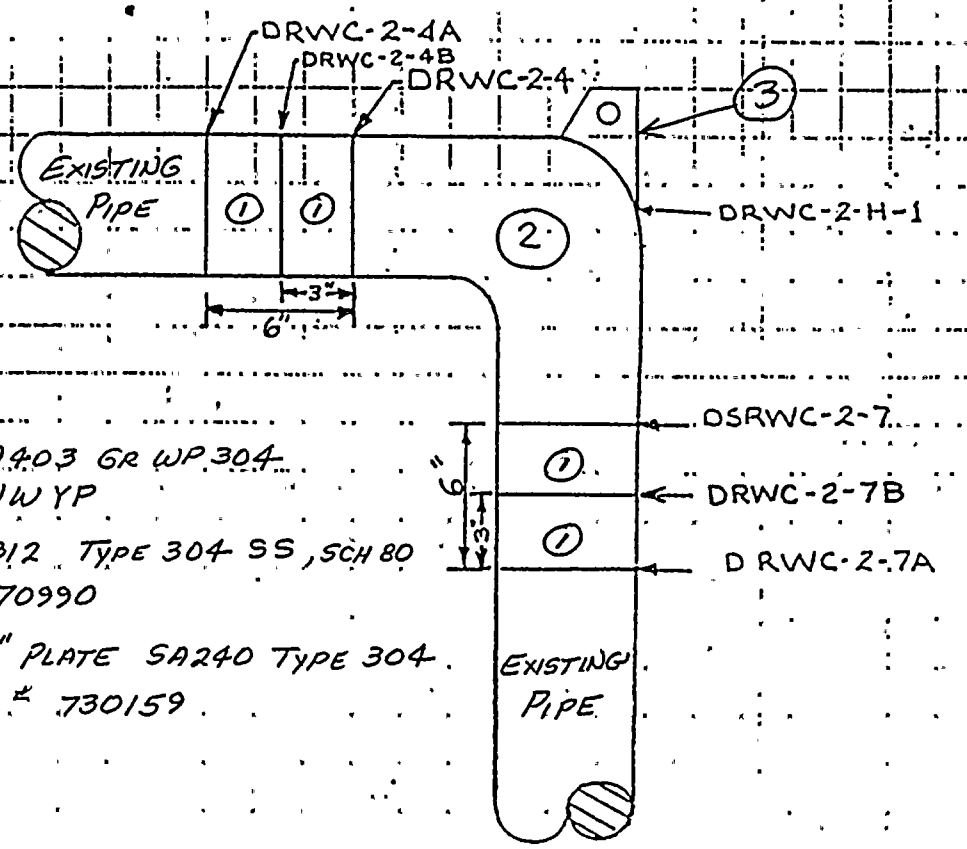

NEW MATERIAL

(2) ELBOW 6" A403 GR WP304
HT# JWYP

(1) PIPE 6" A312 TYPE 304 SS, SCH 80
HT# 470990

(3) HGR. LUG - 1/2" PLATE SA240 TYPE 304
HT# 730159

WELD MAP
MR A-183066 REVISION 3
ADDITION OF WELDS DRWC-2-4B AND 7B

ATTACHMENT E-R3

ASME SECTION XI SUMMARY REPORT

Tennessee Valley Authority
Browns Ferry Nuclear Plant

Form 164
BF 17.8
Page 4 of 5
MAR 19 1985

ASME SECTION XI SUMMARY REPORT SHEET 99 of 255

Plant BFNP (Unit 2)
System 69
TVA Class A
~~Workplan~~/MR No. A-183226

Furnish the following for the repair or replacement for the as-left condition of the component (after field work is complete). Mark all blanks (indicate NA for items which do not apply).

National Board Number of repaired or replaced component. NA

Name of the components and description (include size, capacity, material, and location)--These requirements may be satisfied by attaching an applicable drawing. RWCU Piping near weld # DRWC-2-1A, See Dwg. CHM-2144C

Name of Manufacturer NA

Address of Manufacturer (if known) NA

Manufacturer's component identification numbers (i.e., serial number, subassembly number, heat number). If more than one component is replaced, attach weld map and identify items by item number. See Dwg.

Brief description of repair or replacement work performed, including conditions observed and corrective measures taken, as applicable (reference DCR, CAR, etc.; drawing may be attached with affected area circled). Removed indications, No repair required, ~~N-PT-1~~ GFM 9-14-85

Brief description of post repair or replacement tests and examinations (if required) by instruction or procedure number. N-PT-1

ANII/ANI name, employer, and business address Bill Rice / R. Russell. Hartford Steam Boiler Inspection & Insurance Co., 4330 Georgetown Square, Atlanta GA

Date work completed 9-2-85

Gary McTennell / 9-14-85
Cognizant Engineer Date

Retention: Period - Lifetime, Responsibility - Modifications Supervisor

Tennessee Valley Authority
Browns Ferry Nuclear Plant

Form 164
BF 17.8
Page 4 of 5
MAR 19 1985
SHEET 100 of 255

ASME SECTION XI SUMMARY REPORT

Plant BFNP (Unit 2)
System 68
TVA Class A
~~Workplan~~/MR No. A-183227

Furnish the following for the repair or replacement for the as-left condition of the component (after field work is complete). Mark all blanks (indicate NA for items which do not apply).

National Board Number of repaired or replaced component. NA

Name of the components and description (include size, capacity, material, and location)--These requirements may be satisfied by attaching an applicable drawing.
RECIRC PIPING NEAR WELD KR-2-12, See Dwg CHM-2068

Name of Manufacturer NA

Address of Manufacturer (if known) NA

Manufacturer's component identification numbers (i.e., serial number, subassembly number, heat number). If more than one component is replaced, attach weld map and identify items by item number. See Dwg.

Brief description of repair or replacement work performed, including conditions observed and corrective measures taken, as applicable (reference DCR, CAR, etc.; drawing may be attached with affected area circled). Ground out indication on weld, no weld repair required

Brief description of post repair or replacement tests and examinations (if required) by instruction or procedure number. N-PT-1, N-VT-3

ANII/ANI name, employer, and business address Bill Rice / R. Burrell. Hartford Steam Boiler, Atlanta

Date work completed 6-25-85

Gary F McConnell / 6-25-85
Cognizant Engineer Date

Retention: Period - Lifetime, Responsibility - Modifications Supervisor

TENNESSEE VALLEY AUTHORITY
BROWNS FERRY NUCLEAR PLANT
SITE DIRECTOR STANDARD PRACTICE

SEP 22 1989

FORM SDSP-403
FORM NIS-2 ATTACHMENT

1. (OWNER) TENNESSEE VALLEY AUTHORITY
NUCLEAR POWER

DATE 5/19/90

2. (PLANT) BROWNS FERRY NUCLEAR PLANT
P.O. BOX 2000
DECATUR, ALABAMA

SHEET [a] 101 OF 255

MR# 190667

3. WORK PERFORMED BY: TVA
COMPANY

P.O. Box 2000
ADDRESS

DECATUR, AL
CITY AND STATE

TYPE CODE SYMBOL STAMP [b] N/A

AUTHORIZATION NO. [b] N/A

EXPIRATION DATE [b] N/A

4. IDENTIFICATION OF SYSTEM 73 - HPCI

5(A). APPLICATION CONSTRUCTION CODE ANSI B31.1 19 67
EDITION 67 ADDENDA N/A CODE CASE N/A

5(B). APPLICATION EDITION OF SECTION XI UTILIZED FOR REPAIRS OR REPLACEMENTS: 1980

6(A). NAME OF COMPONENT(S) AND DESCRIPTION (INCLUDE SIZE, CAPACITY, MATERIAL, AND LOCATION AS NEEDED TO AID IN IDENTIFICATION)
2-HCV-73-23, Walworth 16" Globe Valve model 5312WE Series W030, Code # 153532 0385, Walworth DWG # A-12380-M-1-E.

6(B). NAME OF MANUFACTURER WALWORTH Co.
ADDRESS OF MANUFACTURER (IF KNOWN) N/A

6(C). MANUFACTURER'S SERIAL NUMBER N/A

6(D). NATIONAL BOARD NUMBER (IF APPLICABLE) N/A

6(E). OTHER IDENTIFICATION (SUBASSEMBLY NUMBER, HEAT NUMBER, ETC.)
Contract # 90744 (NIM 1.3.1-LD CI)

6(F). YEAR BUILT N/A CODE CLASS ☐ 1 ☒ 2

6(G). REPAIRED ☒ REPLACED ☐ [c] REPLACEMENT ☐ [d]

6(H). ASME CODE STAMPED YES ☐ NO ☒

7. BRIEF DESCRIPTION OF REPAIR OR REPLACEMENT WORK PERFORMED.
VALVE DISC WELD Buildup & REMACHINED ON VALVE 2-HCV-73-23

8. TESTS CONDUCTED: HYDROSTATIC ☐ PNEUMATIC ☐
NOMINAL OPERATING PRESSURE ☐ OTHER ☒
PRESSURE _____ PSI TEST TEMPERATURE _____ F°

9. REMARKS: 2-SI-4.7.9.2.9-3/73b, 2-SI-4.5.E.1.d

( ) APPLICABLE MANUFACTURERS DATA REPORTS [e] TO BE ATTACHED.

RESPONSIBLE ENGR. Albert E. Cooke Mech. MAINT DATE 5/19/90
*
ORGANIZATION

ANII _____ DATE _____

* REF CAQR# CHA 890003713

[a] SHEET NOS. FILLED IN BY TESTING AND DIAGNOSTIC PROGRAMS BRANCH.
[b] FOR WORK PERFORMED BY CERTIFICATE HOLDER
[c] REPLACED (LIKE OR EQUIVALENT).
[d] REPLACEMENT (MODIFICATION).
[e] WHEN REQUIRED BY CONSTRUCTION CODE.

RETENTION PERIOD: LIFETIME RESPONSIBLE ORGANIZATION: NM-PROCESSES/SPECIAL PROGRAMS

Tennessee Valley Authority
Browns Ferry Nuclear Plant

ASME SECTION XI SUMMARY REPORT SHEET 102 of 255

*Tennessee Valley Authority
*Office of Nuclear Power, 1750 CST2-C
*Browns Ferry Nuclear Plant Unit 2
*P.O. Box 2000
*Decatur, Alabama

Comm. Service Date 3/15/86
System Recirculation
TVA Class A
Workplan/MR No. A-190668

Furnish the following for the repair or replacement for the as-left condition of the component (after field work is complete). Mark all blanks (indicate NA for items which do not apply).

National Board Number of repaired or replaced component. SS-5 At 98°

Name of the components and description (include size, capacity, material, and location)—These requirements may be satisfied by attaching an applicable drawing.
Snubber SS-5 (98°) Lug Attachment

Name of Manufacturer NA

Address of Manufacturer (if known) NA

Manufacturer's component identification numbers (i.e., serial number, subassembly number, heat number). If more than one component is replaced, attach weld map and identify items by item number. NA

Brief description of repair or replacement work performed, including conditions observed and corrective measures taken, as applicable (reference DCR, CAR, etc.; drawing may be attached with attached affected area circled). Remove Existing Snubber Lug To facilitate IHSI, Reinstall Snubber Lug After Completion of IHSI

Brief description of post repair or replacement tests and examintaions (if required) by instruction or procedure number. BF17.8, MAI22, MAI23, MMI45, N-VT-3, N-PT-1

ANII/ANI name, employer, and business address Bill Rice/Roosevelt Russell The Hartford Steamboiler Insp. And Ins. Co., 4330 Georgetown Square, Atlanta GA 30338

Date work completed 3/15/86

[signature] 7/15/86
Cognizant Engineer Date

Retention: Period - Lifetime, Responsibility - Modifications Supervisor

*Revision

0510K

TENNESSEE VALLEY AUTHORITY
BROWNS FERRY NUCLEAR PLANT
SITE DIRECTOR STANDARD PRACTICE

SEP 22 1989

FORM PAGE 1 OF
FORM SDSP-403
SDSP 13.3

FORM SDSP-403
FORM NIS-2 ATTACHMENT

SHEET 103 of 255

* REFERENCE CAQR CHA 890003713

1. (OWNER) TENNESSEE VALLEY AUTHORITY
NUCLEAR POWER — DATE 06-19-90

2. (PLANT) BROWNS FERRY NUCLEAR PLANT
P.O. BOX 2000
DECATUR, ALABAMA — SHEET [a] 1 OF 1

MR# 190669

3. WORK PERFORMED BY: TVA (COMPANY) — TYPE CODE SYMBOL STAMP [b] N/A
PO BOX 2000 (ADDRESS) — AUTHORIZATION NO. [b] N/A
DECATUR ALABAMA (CITY AND STATE) — EXPIRATION DATE [b] N/A

4. IDENTIFICATION OF SYSTEM SYSTEM-68 - RECIRC

5(A). APPLICATION CONSTRUCTION CODE USAS B31.1.0 19 67
EDITION THRU ADDENDA N/A CODE CASE N/A

5(B). APPLICATION EDITION OF SECTION XI UTILIZED FOR REPAIRS OR REPLACEMENTS: 1980

6(A). NAME OF COMPONENT(S) AND DESCRIPTION (INCLUDE SIZE, CAPACITY, MATERIAL, AND LOCATION AS NEEDED TO AID IN IDENTIFICATION)
UNIT-2, EL-556 RXBLDG DRYWELL PIPE SUPPORT.
H-2 (LOOP A)

6(B). NAME OF MANUFACTURER TVA.
ADDRESS OF MANUFACTURER (IF KNOWN) PO BOX 2000 DECATUR ALA.

6(C). MANUFACTURER'S SERIAL NUMBER N/A

6(D). NATIONAL BOARD NUMBER (IF APPLICABLE) N/A

6(E). OTHER IDENTIFICATION (SUBASSEMBLY NUMBER, HEAT NUMBER, ETC.) N/A

6(F). YEAR BUILT N/A — CODE CLASS ☒ 1 ☐ 2

6(G). REPAIRED ☐ — REPLACED ☐ [c] — REPLACEMENT ☒ [d]

6(H). ASME CODE STAMPED YES ☐ NO ☒

7. BRIEF DESCRIPTION OF REPAIR OR REPLACEMENT WORK PERFORMED.
REMOVED SUPPORT TO FACILITATE IHSI. DURING REMOVAL SUPPORT WAS CUT TOO SHORT AND A NEW ONE WAS FABRICATED

8. TESTS CONDUCTED: HYDROSTATIC ☐ — PNEUMATIC ☐
NOMINAL OPERATING PRESSURE ☐ — OTHER ☐
PRESSURE N/A PSI — TEST TEMPERATURE N/A F°

9. REMARKS:

( ) APPLICABLE MANUFACTURERS DATA REPORT [e] TO BE ATTACHED.

RESPONSIBLE ENGR. R.W. AYCOCK / SYSTEM — DATE 06-19-90
ORGANIZATION

ANII * R. Russell Jr. — DATE 6-25-90

[a] SHEET NOS. FILLED IN BY TESTING AND DIAGNOSTIC PROGRAMS BRANCH.
[b] FOR WORK PERFORMED BY CERTIFICATE HOLDER
[c] REPLACED (LIKE OR EQUIVALENT).
[d] REPLACEMENT (MODIFICATION).
[e] WHEN REQUIRED BY CONSTRUCTION CODE.

RETENTION PERIOD: LIFETIME — RESPONSIBLE ORGANIZATION: NM-PROCESSES/SPECIAL PROGRAMS

TENNESSEE VALLEY AUTHORITY
BROWNS FERRY NUCLEAR PLANT
SITE DIRECTOR STANDARD PRACTICE

SEP 22 1989

FORM PAGE 1
FORM SDSP-40
SDSP 13.3

FORM SDSP-403
FORM NIS-2 ATTACHMENT

SHEET 104 of 255

*REFERENCE CAQR #CHA890003713

1. (OWNER) TENNESSEE VALLEY AUTHORITY
NUCLEAR POWER — DATE 06-14-90

2. (PLANT) BROWNS FERRY NUCLEAR PLANT
P.O. BOX 2000
DECATUR, ALABAMA — SHEET [a] 1 OF 1

MR# 190670

3. WORK PERFORMED BY: TVA (COMPANY) — TYPE CODE SYMBOL STAMP [b] N/A
PO BOX 2000 (ADDRESS) — AUTHORIZATION NO. [b] N/A
DECATUR ALABAMA (CITY AND STATE) — EXPIRATION DATE [b] N/A

4. IDENTIFICATION OF SYSTEM: SYSTEM-68

5(A). APPLICATION CONSTRUCTION CODE USAS B31.1.0 19 67
EDITION THRU ADDENDA N/A CODE CASE N/A

5(B). APPLICATION EDITION OF SECTION XI UTILIZED FOR REPAIRS OR REPLACEMENTS: 1980

6(A). NAME OF COMPONENT(S) AND DESCRIPTION (INCLUDE SIZE, CAPACITY, MATERIAL, AND LOCATION AS NEEDED TO AID IN IDENTIFICATION)
UNIT-2, RXBLDG, EL-556, DRYWELL, PIPE SUPPORT H-2

6(B). NAME OF MANUFACTURER TVA
ADDRESS OF MANUFACTURER (IF KNOWN) PO BOX 2000 DECATUR ALA.

6(C). MANUFACTURER'S SERIAL NUMBER N/A

6(D). NATIONAL BOARD NUMBER (IF APPLICABLE) N/A

6(E). OTHER IDENTIFICATION (SUBASSEMBLY NUMBER, HEAT NUMBER, ETC.) N/A

6(F). YEAR BUILT N/A — CODE CLASS ☒ 1 ☐ 2

6(G). REPAIRED ☒ — REPLACED ☐ [c] — REPLACEMENT ☒ [d]

6(H). ASME CODE STAMPED YES ☐ NO ☒

7. BRIEF DESCRIPTION OF REPAIR OR REPLACEMENT WORK PERFORMED.
REMOVED PIPE SUPPORT Y INSTALLED NEW ONE IN ITS PLACE, AFTER LIST IS COMPLETE. REF. MR# 190670 RWA 06/27/90

8. TESTS CONDUCTED: HYDROSTATIC ☐ PNEUMATIC ☐
NOMINAL OPERATING PRESSURE ☐ OTHER ☐
PRESSURE N/A PSI TEST TEMPERATURE N/A F°

9. REMARKS:

( ) APPLICABLE MANUFACTURERS DATA REPORT* TO BE ATTACHED.

RESPONSIBLE ENGR. R.W. AYCOCK / SYSTEMS ORGANIZATION DATE 06-14-90

ANII *R. Russell Jr. DATE 6-25-90

[a] SHEET NOS. FILLED IN BY TESTING AND DIAGNOSTIC PROGRAMS BRANCH.
[b] FOR WORK PERFORMED BY CERTIFICATE HOLDER
[c] REPLACED (LIKE OR EQUIVALENT).
[d] REPLACEMENT (MODIFICATION).
* WHEN REQUIRED BY CONSTRUCTION CODE.

RETENTION PERIOD: LIFETIME RESPONSIBLE ORGANIZATION: NM-PROCESSES/SPECIAL PROGRAMS

Tennessee Valley Authority
Bronws Ferry Nuclear Plant

ASME SECTION XI SUMMARY REPORT SHEET 105 of 255

*Tennessee Valley Authority
*Office of Nuclear Power, 1750 CST2-C
*Browns Ferry Nuclear Plant Unit 2
*P.O. Box 2000
*Decatur, Alabama

Comm. Service Date 2/28/86
System Recirculation
TVA Class A
Workplan/(MR) No. A-190671

Furnish the following for the repair or replacement for the as-left condition of the component (after field work is complete). Mark all blanks (indicate NA for items which do not apply).

National Board Number of repaired or replaced component. SS-5 (262°)

Name of the components and description (include size, capacity, material, and location)—These requirements may be satisfied by attaching an applicable drawing.
Snubber SS-5 (262°) Lug Attachment

Name of Manufacturer NA

Address of Manufacturer (if known) NA

Manufacturer's component identification numbers (i.e., serial number, subassembly number, heat number). If more than one component is replaced, attach weld map and identify items by item number. NA

Brief description of repair or replacement work performed, including conditions observed and corrective measures taken, as applicable (reference DCR, CAR, etc.; drawing may be attached with attached affected area circled). Remove Existing Snubber Lugs To Facilitate IHSI, Reinstall Snubber Lug After Completion OF IHSI.

Brief description of post repair or replacement tests and examintaions (if required) by instruction or procedure number. BF 17.8, MAI 22, MAI 23, MMI 45, N-VT-3, N-PT-1

ANII/ANI name, employer, and business address Bill Rice/Roosevelt Russell The Hartford Steamboiler Insp. And Ins. Co., 4330 Georgetown Square, Atlanta GA 30338

Date work completed 2/28/86

[signature] 7/15/86
Cognizant Engineer Date

Retention: Period - Lifetime, Responsibility - Modifications Supervisor

*Revision

0510K

TENNESSEE VALLEY AUTHORITY
BROWNS FERRY NUCLEAR PLANT
SITE DIRECTOR STANDARD PRACTICE

SEP 22 1989

FORM PAGE 1
FORM SDSP-4C
SDSP 13.3

FORM SDSP-403
FORM NIS-2 ATTACHMENT SHEET 106 of 255

*REFERENCE CAQR# CHA890003713

1. (OWNER) TENNESSEE VALLEY AUTHORITY
NUCLEAR POWER
DATE 06-14-90

2. (PLANT) BROWNS FERRY NUCLEAR PLANT
P.O. BOX 2000
DECATUR, ALABAMA
SHEET [a] 1 OF 1

MRH 190672

3. WORK PERFORMED BY: TVA (COMPANY)
TYPE CODE SYMBOL STAMP [b] N/A
PO BOX 2000 (ADDRESS)
AUTHORIZATION NO. [b] N/A
DECATUR ALABAMA (CITY AND STATE)
EXPIRATION DATE [b] N/A

4. IDENTIFICATION OF SYSTEM SYSTEM-74, MRH 190672

5(A). APPLICATION CONSTRUCTION CODE USAS B31.1.0 19 67
EDITION THRU ADDENDA N/A CODE CASE N/A

5(B). APPLICATION EDITION OF SECTION XI UTILIZED FOR REPAIRS OR REPLACEMENTS: 1980

6(A). NAME OF COMPONENT(S) AND DESCRIPTION (INCLUDE SIZE, CAPACITY, MATERIAL, AND LOCATION AS NEEDED TO AID IN IDENTIFICATION)
UNIT-2, EXBLDG, DRYWELL, BESIDE HCV 74-55, PIPE BRACE

6(B). NAME OF MANUFACTURER TVA
ADDRESS OF MANUFACTURER (IF KNOWN) PO BOX 2000 DECATUR ALA.

6(C). MANUFACTURER'S SERIAL NUMBER N/A

6(D). NATIONAL BOARD NUMBER (IF APPLICABLE) N/A

6(E). OTHER IDENTIFICATION (SUBASSEMBLY NUMBER, HEAT NUMBER, ETC.) N/A

6(F). YEAR BUILT N/A CODE CLASS ☒ 1 ☐ 2

6(G). REPAIRED ☒ REPLACED ☐ [c] REPLACEMENT ☐ [d]

6(H). ASME CODE STAMPED YES ☐ NO ☒

7. BRIEF DESCRIPTION OF REPAIR OR REPLACEMENT WORK PERFORMED.
TO FACILITATE IHSI ON DCAH2-2-X BETWEEN THE PIPE BRACE, RETURNED TO ORIGINAL CONFIGURATION. AFTER IHSI IS COMPLETED

8. TESTS CONDUCTED: HYDROSTATIC ☐ PNEUMATIC ☐
NOMINAL OPERATING PRESSURE ☐ OTHER ☐
PRESSURE N/A PSI TEST TEMPERATURE N/A F°

9. REMARKS: * PERFORM NDE PER N-UT-3 AND N-PT-1 ON THE EXCAVATION AREAS, RESULTS WILL PERFORM VIBRATION INSPECTION PER ATTACHED MEMOS
REINSTALL THE 1" PIPE BRACE AFTER IHSI IS COMPLETE

( ) APPLICABLE MANUFACTURERS DATA REPORT [e] TO BE ATTACHED.

RESPONSIBLE ENGR. R.W. RYCOLX / SYSTEM DATE 06-14-90
ORGANIZATION

ANII * [signature] DATE 6-25-90

[a] SHEET NOS. FILLED IN BY TESTING AND DIAGNOSTIC PROGRAMS BRANCH.
[b] FOR WORK PERFORMED BY CERTIFICATE HOLDER
[c] REPLACED (LIKE OR EQUIVALENT).
[d] REPLACEMENT (MODIFICATION).
[e] WHEN REQUIRED BY CONSTRUCTION CODE.

RETENTION PERIOD: LIFETIME RESPONSIBLE ORGANIZATION: NM-PROCESSER/SPECIAL PROGRAMS

Tennessee Valley Authority
Bronws Ferry Nuclear Plant

Form 164
BF 17.8
Page 4 Of 5
AUG 0 7 1985 SHEET 107 of 255

ASME SECTION XI SUMMARY REPORT

*Tennessee Valley Authority
*Office of Nuclear Power, 1750 CST2-C
*Browns Ferry Nuclear Plant Unit 2
*P.O. Box 2000
*Decatur, Alabama

Comm. Service Date MARCH 1, 1975
System 74 (RHR)
TVA Class A
Workplan/(MR) No. A-190673

Furnish the following for the repair or replacement for the as-left condition of the component (after field work is complete). Mark all blanks (indicate NA for items which do not apply).

National Board Number of repaired or replaced component. NA

Name of the components and description (include size, capacity, material, and location)--These requirements may be satisfied by attaching an applicable drawing.
1" SCH. 80 ASME SA312, TYPE 304

Name of Manufacturer SANDVIK, INC. SCRANTON WORKS

Address of Manufacturer (if known) PO BOX 1220, SCRANTON, PA. 18501

Manufacturer's component identification numbers (i.e., serial number, subassembly number, heat number). If more than one component is replaced, attach weld map and identify items by item number. HT. NO. 466139

Brief description of repair or replacement work performed, including conditions observed and corrective measures taken, as applicable (reference DCR, CAR, etc.; drawing may be attached with attached affected area circled). REMOVED 1" TIEBACK SUPPORT TO FACILITATE IHSI ON WELD DS RHR-2-11. REINSTALLED 1" TIEBACK AFTER COMPLETION OF IHSI.

Brief description of post repair or replacement tests and examintaions (if required) by instruction or procedure number. EXCAVATION AREAS INSPECTED PER N-VT-3 AND N-PT-1. PRESSURE BOUNDARY WELDS INSPECTED PER N-VT-3 AND N-PT-1.

ANII/ANI name, employer, and business address ANII/ANI: BILL RICE AND ROOSEVELT RUSSELL, AIA: HARTFORD STEAM BOILER INSP. & INS. CO. 4330 GEORGETOWN SQ. ATLANTA, GA. 30338

Date work completed JAN. 28, 1986

James LeRoy Barnett 1 Mar. 20 1986
Cognizant Engineer Date

Retention: Period - Lifetime, Responsibility - Modifications Supervisor

*Revision

0510K

3485 0951

TENNESSEE VALLEY AUTHORITY
BROWNS FERRY NUCLEAR PLANT
SITE DIRECTOR STANDARD PRACTICE

SEP 22 1989

FORM PAGE 1 OF 1
FORM SDSP-403
SDSP 13.3

FORM SDSP—403
FORM NIS—2 ATTACHMENT

1. (OWNER) TENNESSEE VALLEY AUTHORITY
NUCLEAR POWER

DATE 6-20-90

2. (PLANT) BROWNS FERRY NUCLEAR PLANT
P.O. BOX 2000
DECATUR, ALABAMA

SHEET [a] 108 OF 255

MR# 252811

3. WORK PERFORMED BY: TVA
COMPANY

TYPE CODE SYMBOL STAMP [b] NA

P.O. Box 2000
ADDRESS

AUTHORIZATION NO. [b] NA

Decatur Al.
CITY AND STATE

EXPIRATION DATE [b] NA

4. IDENTIFICATION OF SYSTEM SYS 85 Control Rod Drive

5(A). APPLICATION CONSTRUCTION CODE ~~ASME Sec VIII Div 1 19 74~~ MM 7-3-91 ANSI B31.1, 1967
EDITION ~~Suffix~~ MM 7-3-91 1967, ADDENDA ~~Suffix~~ MM 7-3-91 WINTER, CODE CASE NA

5(B). APPLICATION EDITION OF SECTION XI UTILIZED FOR REPAIRS OR REPLACEMENTS: 1980

6(A). NAME OF COMPONENT(S) AND DESCRIPTION (INCLUDE SIZE, CAPACITY, MATERIAL, AND LOCATION AS NEEDED TO AID IN IDENTIFICATION)
H2O Accumulator piston o-rings, 2-85-HCU-22-07

6(B). NAME OF MANUFACTURER GE
ADDRESS OF MANUFACTURER (IF KNOWN) UNKNOWN

6(c). MANUFACTURER'S SERIAL NUMBER A 4687

6(D). NATIONAL BOARD NUMBER (IF APPLICABLE) NA

6(E). OTHER IDENTIFICATION (SUBASSEMBLY NUMBER, HEAT NUMBER, ETC.)
2-HCU-85-2207

6(F). YEAR BUILT 1969 CODE CLASS ☐ 1 ☒ 2

6(G). REPAIRED ☐ REPLACED ☒ [c] REPLACEMENT ☐ [d]

6(H). ASME CODE STAMPED YES ☐ NO ☒

7. BRIEF DESCRIPTION OF REPAIR OR REPLACEMENT WORK PERFORMED:
Replaced H2O Accumulator

8. TESTS CONDUCTED: HYDROSTATIC ☒ PNEUMATIC ☐
NOMINAL OPERATING PRESSURE ☐ OTHER ☐
PRESSURE 1525 PSI TEST TEMPERATURE > 40F [e]

9. REMARKS: ~~Hydro static Test performed 100 of~~
~~MR# 252811 MM 6-20-90~~ KGF W.O. 90-08938-00

( ) APPLICABLE MANUFACTURERS DATA REPORT [e] TO BE ATTACHED. M. Marlin 7-3-91
RESPONSIBLE ENGR. Ernest J. Williams Test Sys DATE 6/20/90
ORGANIZATION

ANII _____ DATE _____

*REF CAQR# CHA890003713

[a] SHEET NOS. FILLED IN BY TESTING AND DIAGNOSTIC PROGRAMS BRANCH.
[b] FOR WORK PERFORMED BY CERTIFICATE HOLDER
[c] REPLACED (LIKE OR EQUIVALENT).
[d] REPLACEMENT (MODIFICATION).
[e] WHEN REQUIRED BY CONSTRUCTION CODE.

RETENTION PERIOD: LIFETIME RESPONSIBLE ORGANIZATION: NM—PROCESS/SPECIAL PROGRAMS

TENNESSEE VALLEY AUTHORITY
BROWNS FERRY NUCLEAR PLANT
SITE DIRECTOR STANDARD PRACTICE

SEP 22 1989

FORM SDSP-403
FORM NIS-2 ATTACHMENT

1. (OWNER) TENNESSEE VALLEY AUTHORITY
NUCLEAR POWER — DATE 6-20-90

2. (PLANT) BROWNS FERRY NUCLEAR PLANT
P.O. BOX 2000
DECATUR, ALABAMA — SHEET [a] 109 OF 255

MRA 257554

3. WORK PERFORMED BY: TVA (COMPANY) — TYPE CODE SYMBOL STAMP [b] NA
P.O. Box 2000 (ADDRESS) — AUTHORIZATION NO. [b] NA
Decatur, Al. (CITY AND STATE) — EXPIRATION DATE [b] NA

4. IDENTIFICATION OF SYSTEM SYS 85 Control Rod Drive

5(A). APPLICATION CONSTRUCTION CODE ~~ASME Sec III Div 1 to 74 7-3-91~~ ANSI B31.1, 1967
EDITION ~~7-3-91~~ 1967 ADDENDA ~~7-3-91~~ WINTER CODE CASE NA

5(B). APPLICATION EDITION OF SECTION XI UTILIZED FOR REPAIRS OR REPLACEMENTS: 1980

6(A). NAME OF COMPONENT(S) AND DESCRIPTION (INCLUDE SIZE, CAPACITY, MATERIAL, AND LOCATION AS NEEDED TO AID IN IDENTIFICATION)
H2O Accumulator Piston O-rings, 2-HCU-85-38-47

6(B). NAME OF MANUFACTURER GE
ADDRESS OF MANUFACTURER (IF KNOWN) UNKNOWN

6(c). MANUFACTURER'S SERIAL NUMBER A 4399

6(D). NATIONAL BOARD NUMBER (IF APPLICABLE) NA

6(E). OTHER IDENTIFICATION (SUBASSEMBLY NUMBER, HEAT NUMBER, ETC.)
2-HCU-85-3847

6(F). YEAR BUILT 1969 — CODE CLASS ☐ 1 ☒ 2

6(G). REPAIRED ☐ — REPLACED ☒ [c] — REPLACEMENT ☐ [d]

6(H). ASME CODE STAMPED — YES ☐ — NO ☒

7. BRIEF DESCRIPTION OF REPAIR OR REPLACEMENT WORK PERFORMED.
Replaced H2O Accumulator from CAV 6/20/9 with rebuilt one from 2-HCU-85-3807

8. TESTS CONDUCTED: HYDROSTATIC ☒ — PNEUMATIC ☐
NOMINAL OPERATING PRESSURE ☐ — OTHER ☐
PRESSURE 1525 PSI — TEST TEMPERATURE > 40F [e]

9. REMARKS: ~~Hydro Static Test performed 6-22-89 report of 22-87~~ MRA 6-26-90 RGF W.O. # 908938-00

( ) APPLICABLE MANUFACTURERS DATA REPORTS TO BE ATTACHED. M. Martin 7-3-91
RESPONSIBLE ENGR. Ernest L. Williams Tech Spec * DATE 6/20/90
ORGANIZATION
ANII _____ DATE _____

* REF CAQR # CHA 890003713

[a] SHEET NOS. FILLED IN BY TESTING AND DIAGNOSTIC PROGRAMS BRANCH.
[b] FOR WORK PERFORMED BY CERTIFICATE HOLDER
[c] REPLACED (LIKE OR EQUIVALENT).
[d] REPLACEMENT (MODIFICATION).
[e] WHEN REQUIRED BY CONSTRUCTION CODE.

RETENTION PERIOD: LIFETIME — RESPONSIBLE ORGANIZATION: NM-PROCESSES/SPECIAL PROGRAMS

TENNESSEE VALLEY AUTHORITY
BROWNS FERRY NUCLEAR PLANT
SITE DIRECTOR STANDARD PRACTICE

SEP 22 1989

FORM SDSP-403
FORM NIS-2 ATTACHMENT

1. (OWNER) TENNESSEE VALLEY AUTHORITY
NUCLEAR POWER
DATE 5/29/90

2. (PLANT) BROWNS FERRY NUCLEAR PLANT
P.O. BOX 2000
DECATUR, ALABAMA
SHEET [a] 110 OF 255

MR# 258806

3. WORK PERFORMED BY: TVA (COMPANY)
P.O. Box 2000 (ADDRESS)
Decatur Al (CITY AND STATE)
TYPE CODE SYMBOL STAMP [b] NA
AUTHORIZATION NO. [b] NA
EXPIRATION DATE [b] NA

4. IDENTIFICATION OF SYSTEM 074 - RHR

5(A). APPLICATION CONSTRUCTION CODE USAS B31.1.0 19 67
EDITION Thru ADDENDA NA CODE CASE NA

5(B). APPLICATION EDITION OF SECTION XI UTILIZED FOR REPAIRS OR REPLACEMENTS: 1980

6(A). NAME OF COMPONENT(S) AND DESCRIPTION (INCLUDE SIZE, CAPACITY, MATERIAL, AND LOCATION AS NEEDED TO AID IN IDENTIFICATION)
2B RHR Pump, Rx. Bldg. El. 519.

6(B). NAME OF MANUFACTURER Bingham Pump Co.
ADDRESS OF MANUFACTURER (IF KNOWN) Portland, Oregon.

6(c). MANUFACTURER'S SERIAL NUMBER NA

6(D). NATIONAL BOARD NUMBER (IF APPLICABLE) NA

6(E). OTHER IDENTIFICATION (SUBASSEMBLY NUMBER, HEAT NUMBER, ETC.) NA

6(F). YEAR BUILT NA CODE CLASS ☐ 1 ☒ 2

6(G). REPAIRED ☐ REPLACED ☒ [c] REPLACEMENT ☐ [d]

6(H). ASME CODE STAMPED YES ☐ NO ☒

7. BRIEF DESCRIPTION OF REPAIR OR REPLACEMENT WORK PERFORMED.
Rebuild Pump

8. TESTS CONDUCTED: HYDROSTATIC ☐ PNEUMATIC ☐
NOMINAL OPERATING PRESSURE ☒ OTHER ☐
PRESSURE _____ PSI TEST TEMPERATURE _____ F°

9. REMARKS: Testing per MMI-16B

( ) APPLICABLE MANUFACTURERS DATA REPORT [e] TO BE ATTACHED.
* RESPONSIBLE ENGR. Joe Woodward / BOPSys. DATE 5/29/90
ORGANIZATION

ANII _____ DATE _____

* Ref: CAQR # CHA 890003713

[a] SHEET NOS. FILLED IN BY TESTING AND DIAGNOSTIC PROGRAMS BRANCH.
[b] FOR WORK PERFORMED BY CERTIFICATE HOLDER
[c] REPLACED (LIKE OR EQUIVALENT).
[d] REPLACEMENT (MODIFICATION).
[e] WHEN REQUIRED BY CONSTRUCTION CODE.

RETENTION PERIOD: LIFETIME RESPONSIBLE ORGANIZATION: NM-PROCESSES/SPECIAL PROGRAMS

Tennessee Valley Authority
Browns Ferry Nuclear Plant

Form 164
BF 17.8
Page 4 of 5
MAR 19 1985
SHEET 111 of 255

ASME SECTION XI SUMMARY REPORT

Plant BFNP (Unit 2)
System 68
TVA Class A
~~Workplan~~/MR No. A-270463

Furnish the following for the repair or replacement for the as-left condition of the component (after field work is complete). Mark all blanks (indicate NA for items which do not apply).

National Board Number of repaired or replaced component. NA

Name of the components and description (include size, capacity, material, and location)--These requirements may be satisfied by attaching an applicable drawing. RECIRC. PIPING, DOWNSTREAM OF WELD # 6R-2-8, SEE DWG CHM-2068

Name of Manufacturer NA

Address of Manufacturer (if known) NA

Manufacturer's component identification numbers (i.e., serial number, subassembly number, heat number). If more than one component is replaced, attach weld map and identify items by item number. SEE DWG.

Brief description of repair or replacement work performed, including conditions observed and corrective measures taken, as applicable (reference DCR, CAR, etc.; drawing may be attached with affected area circled). linear indication removed by grinding, NO weld repair required

Brief description of post repair or replacement tests and examinations (if required) by instruction or procedure number. ~~N-PT-1~~ 9-14-85 ~~N-VT-3~~ 9-14-85
N-PT-1, N-VT-3

ANII/ANI name, employer, and business address B. Reid/R. Russell. Hartford Steam Boilers Inspection & Insurance Co., 4330 Georgetown Square, Atlanta GA

Date work completed 6-29-85

Gary F. McTarnell 9-14-85
Cognizant Engineer Date

Retention: Period - Lifetime, Responsibility - Modifications Supervisor

Tennessee Valley Authority
Browns Ferry Nuclear Plant

Form 164
BF 17.8
Page 4 of 5
MAR 19 1985

ASME SECTION XI SUMMARY REPORT

SHEET 112 of 255

Plant BFNP (Unit 2)
System 74
TVA Class A
~~Workplan~~/MR No. A-538108

Furnish the following for the repair or replacement for the as-left condition of the component (after field work is complete). Mark all blanks (indicate NA for items which do not apply).

National Board Number of repaired or replaced component. NA

Name of the components and description (include size, capacity, material, and location)--These requirements may be satisfied by attaching an applicable drawing. RHR 1" DRAIN LINE NEAR WELD #HS1-2-116, See DWG. CHM 2010-C

Name of Manufacturer NA

Address of Manufacturer (if known) NA

Manufacturer's component identification numbers (i.e., serial number, subassembly number, heat number). If more than one component is replaced, attach weld map and identify items by item number. See DWG.

Brief description of repair or replacement work performed, including conditions observed and corrective measures taken, as applicable (reference DCR, CAR, etc.; drawing may be attached with affected area circled). Ground out indications, NO weld repair required.

Brief description of post repair or replacement tests and examinations (if required) by instruction or procedure number. N-PT-1, N-VT-2

ANII/ANI name, employer, and business address Bill Rice / R. Russell. Hartford Steam Boiler, Atlanta

Date work completed 6-25-85

Gary McConnell / 6-25-85
Cognizant Engineer Date

Retention: Period - Lifetime, Responsibility - Modifications Supervisor

Tennessee Valley Authority
Browns Ferry Nuclear Plant

Form 164
BF 17.8
Page 4 of 5
MAR 1 9 1985

ASME SECTION XI SUMMARY REPORT

SHEET 113 of 255

Plant BFNP
System 74
TVA Class A
~~Workplan~~/MR No. A-538109

Furnish the following for the repair or replacement for the as-left condition of the component (after field work is complete). Mark all blanks (indicate NA for items which do not apply).

National Board Number of repaired or replaced component. NA

Name of the components and description (include size, capacity, material, and location)--These requirements may be satisfied by attaching an applicable drawing.
~~TVA Weld~~ Arc ~~Stud~~ Strike near weld DRHR-2-5 dwg CHM2070-C

Name of Manufacturer TVA

Address of Manufacturer (if known) NA

Manufacturer's component identification numbers (i.e., serial number, subassembly number, heat number). If more than one component is replaced, attach weld map and identify items by item number. See dwg

Brief description of repair or replacement work performed, including conditions observed and corrective measures taken, as applicable (reference DCR, CAR, etc.; drawing may be attached with affected area circled). Work performed per MMI-147 and Standard Practice BF-17.8.

Brief description of post repair or replacement tests and examinations (if required) by instruction or procedure number. per MMI-147 and BF-17.8

ANII/ANI name, employer, and business address B. Rice / R. Russell
Hartford Steam Boiler Inspection & Insurance Co., 4330 Georgetown Square Atlanta GA

Date work completed ~~8-30-85~~ GHB 9-11-85 9-17-85

Cognizant Engineer ~~9-8-85~~ GHB 9-11-85 Gary McCarroll 9-17-85
Date

Retention: Period - Lifetime, Responsibility - Modifications Supervisor

Tennessee Valley Authority
Browns Ferry Nuclear Plant

Form 164
BF 18.8
Page 4 of 4
MAY 8 1984

ASME SECTION XI SUMMARY REPORT

SHEET 114 of 255

Plant BFNP
System Standby Liquid Control
TVA Class D
Workplan/MR No. A567124

Furnish the following for the repair or replacement for the "as left" condition of the component (after field work is complete). Mark all blanks (indicate N/A for items which do not apply).

National Board Number of repaired or replaced component N/A

Name of the components and description (include size, capacity, material, and location)--These requirements may be satisfied by attaching an applicable drawing
BLADDER FOR SLC ACCUMULATOR

Name of Manufacturer GREER

Address of Manufacturer (if known) N/A

Manufacturer's component identification numbers (i.e., serial number, subassembly number, heat number, etc.) If more than one component is replaced, attach weld map and identify items by item number. GREER Part No. A104-252-6

Brief description of repair or replacement work performed, including conditions observed and corrective measures taken, as applicable (Reference DCR, CAR, etc., drawing may be attached with affected area circled). Valve stem on bladder broken - replacing bladder

Brief description of post repair or replacement tests and examinations (if required) by instruction or procedure number MMI-40 leak check of accumulator at normal system operating pressure following bladder replacement.
~~INSURANCE CO.~~
RW 6/21/85

ANI/ANII name, employer, and business address BILL RICE / HARTFORD INSURANCE CO.

Date work completed 5/13/85

Rudy Wilhite 5/21/85
Cognizant Engineer Date

Retention: Period - Lifetime, Responsibility - OMMM Supervisor

Tennessee Valley Authority
Bronws Ferry Nuclear Plant

Form 164
BF 17.8
Page 4 Of 5 SHEET 115 of 255
AUG 0 7 1985

ASME SECTION XI SUMMARY REPORT

*Tennessee Valley Authority
*Office of Nuclear Power, 1750 CST2-C
*Browns Ferry Nuclear Plant Unit 2
*P.O. Box 2000
*Decatur, Alabama

Comm. Service Date 1974
System HPCI
TVA Class 2
Workplan (MR) No. A-567754

Furnish the following for the repair or replacement for the as-left condition of the component (after field work is complete). Mark all blanks (indicate NA for items which do not apply).

National Board Number of repaired or replaced component. N/A

Name of the components and description (include size, capacity, material, and location)--These requirements may be satisfied by attaching an applicable drawing.
VALVE Wedge for 2FCV 73-16 ~~WALWORTH~~ CRANE Cwp 10-29-87 600 LB rated Gate Valve 10", Carbon Steel with stellite hard facing

Name of Manufacturer ~~WALWORTH~~ Cwp 11-2-87 CRANE VALVE Corp. Chapman Division

Address of Manufacturer (if known) INDIAN ORCHARD, MASS.

Manufacturer's component identification numbers (i.e., serial number, subassembly number, heat number). If more than one component is replaced, attach weld map and identify items by item number.
Weld buildup on existing wedge and reused.

Brief description of repair or replacement work performed, including conditions observed and corrective measures taken, as applicable (reference DCR, CAR, etc.; drawing may be attached with attached affected area circled). See attach next to MRA 567754. Weld repair on face of wedge: NOT in seat sealing area.

Brief description of post repair or replacement tests and examintaions (if required) by instruction or procedure number. N-VT-3, Rev. 4; N-PT-1, Rev. 6.

ANII/ANI name, employer, and business address Roosevelt Russell, Jr.; The Hartford Steam Boiler Inspection and Insurance Co., 1117 Perimeter Center West, Suite E-301 Atlanta, Ga. 30338

Date work completed 11-26-85

C. W. Pratt 11-2-87
Cognizant Engineer Date

Retention: Period - Lifetime, Responsibility - Modifications Supervisor

*Revision

0510K

TENNESSEE VALLEY AUTHORITY
BROWNS FERRY NUCLEAR PLANT
SITE DIRECTOR STANDARD PRACTICE

SEP 22 1989

FORM SDSP-403
FORM NIS-2 ATTACHMENT

1. (OWNER) TENNESSEE VALLEY AUTHORITY
NUCLEAR POWER
DATE 5/29/90

2. (PLANT) BROWNS FERRY NUCLEAR PLANT
P.O. BOX 2000
DECATUR, ALABAMA
SHEET [a] 116 OF 255
MR# 571066

3. WORK PERFORMED BY: TVA (COMPANY)
P.O. Box 2000 (ADDRESS)
Decatur Alabama (CITY AND STATE)
TYPE CODE SYMBOL STAMP [b] NA
AUTHORIZATION NO. [b] NA
EXPIRATION DATE [b] NA

4. IDENTIFICATION OF SYSTEM System 073 / HPCI

5(A). APPLICATION CONSTRUCTION CODE USAS B31.1.0 19 67
EDITION thru ADDENDA NA CODE CASE NA

5(B). APPLICATION EDITION OF SECTION XI UTILIZED FOR REPAIRS OR REPLACEMENTS: 1980

6(A). NAME OF COMPONENT(S) AND DESCRIPTION (INCLUDE SIZE, CAPACITY, MATERIAL, AND LOCATION AS NEEDED TO AID IN IDENTIFICATION)
Crossover Pipe Flange, Rx. Bldg El 519, HPCI Rm 2 (UNIT 2)

6(B). NAME OF MANUFACTURER NA
ADDRESS OF MANUFACTURER (IF KNOWN) NA

6(c). MANUFACTURER'S SERIAL NUMBER NA

6(D). NATIONAL BOARD NUMBER (IF APPLICABLE) NA

6(E). OTHER IDENTIFICATION (SUBASSEMBLY NUMBER, HEAT NUMBER, ETC.) NA

6(F). YEAR BUILT NA CODE CLASS ☐ 1 ☒ 2

6(G). REPAIRED ☐ REPLACED ☒ [c] REPLACEMENT ☐ [d]

6(H). ASME CODE STAMPED YES ☐ NO ☒

7. BRIEF DESCRIPTION OF REPAIR OR REPLACEMENT WORK PERFORMED.
Replace Short Studs on Booster Pmp. Discharge Crossover Pipe Flange.

8. TESTS CONDUCTED: HYDROSTATIC ☐ PNEUMATIC ☐
NOMINAL OPERATING PRESSURE ☐ OTHER ☒
PRESSURE _____ PSI TEST TEMPERATURE _____ F°

9. REMARKS: none

( ) APPLICABLE MANUFACTURERS DATA REPORT [e] TO BE ATTACHED.
* RESPONSIBLE ENGR. J. Woodward / Sys-BOP (ORGANIZATION) DATE 5/29/90
ANII _____ DATE _____

* Ref: CAQR # CHA 890003713

[a] SHEET NOS. FILLED IN BY TESTING AND DIAGNOSTIC PROGRAMS BRANCH.
[b] FOR WORK PERFORMED BY CERTIFICATE HOLDER
[c] REPLACED (LIKE OR EQUIVALENT).
[d] REPLACEMENT (MODIFICATION).
[e] WHEN REQUIRED BY CONSTRUCTION CODE.

-RETENTION PERIOD: LIFETIME RESPONSIBLE ORGANIZATION: NM-PROCESSES/SPECIAL PROGRAMS

TENNESSEE VALLEY AUTHORITY
BROWNS FERRY NUCLEAR PLANT
SITE DIRECTOR STANDARD PRACTICE

SEP 22 1989

FORM SDSP-403
FORM NIS-2 ATTACHMENT

1. (OWNER) TENNESSEE VALLEY AUTHORITY
NUCLEAR POWER

DATE 5/19/90

2. (PLANT) BROWNS FERRY NUCLEAR PLANT
P.O. BOX 2000
DECATUR, ALABAMA

SHEET [a] 117 OF 255

MR# 620372

3. WORK PERFORMED BY: TVA
COMPANY
P.O. BOX 2000
ADDRESS
DECATUR, AL
CITY AND STATE

TYPE CODE SYMBOL STAMP [b] N/A
AUTHORIZATION NO. [b] N/A
EXPIRATION DATE [b] N/A

4. IDENTIFICATION OF SYSTEM 73 - HPCI

5(A). APPLICATION CONSTRUCTION CODE ANSI B31.1 19 67
EDITION 67 ADDENDA N/A CODE CASE N/A

5(B). APPLICATION EDITION OF SECTION XI UTILIZED FOR REPAIRS OR REPLACEMENTS: 1980

6(A). NAME OF COMPONENT(S) AND DESCRIPTION (INCLUDE SIZE, CAPACITY, MATERIAL, AND LOCATION AS NEEDED TO AID IN IDENTIFICATION)
2-FCV-73-26 CRANE 16" GATE VALVE MODEL L-150
CRANE DWG # PB-139991

6(B). NAME OF MANUFACTURER CRANE CO
ADDRESS OF MANUFACTURER (IF KNOWN) N/A

6(c). MANUFACTURER'S SERIAL NUMBER N/A

6(D). NATIONAL BOARD NUMBER (IF APPLICABLE) N/A

6(E). OTHER IDENTIFICATION (SUBASSEMBLY NUMBER, HEAT NUMBER, ETC.)
CONTRACT # 90744 (NIM 1.3.1-1D(7))

6(F). YEAR BUILT N/A CODE CLASS ☐ 1 ☒ 2

6(G). REPAIRED ☐ REPLACED ☒ [c] REPLACEMENT ☐ [d]

6(H). ASME CODE STAMPED YES ☐ NO ☒

7. BRIEF DESCRIPTION OF REPAIR OR REPLACEMENT WORK PERFORMED.
REPLACED SHORT BONNET STUDS IN 2-FCV-73-26

8. TESTS CONDUCTED: HYDROSTATIC ☐ PNEUMATIC ☐
NOMINAL OPERATING PRESSURE ☐ OTHER ☐
PRESSURE _____ PSI TEST TEMPERATURE _____ F°

9. REMARKS: NO TESTING REQUIRED PER THIS WORK

( ) APPLICABLE MANUFACTURERS DATA REPORT [e] TO BE ATTACHED.
RESPONSIBLE ENGR. Allen E. Coke / Mech. MAINT DATE 5/19/90
ORGANIZATION
ANII _____ DATE _____

* REF CAQR # CHA 890003713

[a] SHEET NOS. FILLED IN BY TESTING AND DIAGNOSTIC PROGRAMS BRANCH.
[b] FOR WORK PERFORMED BY CERTIFICATE HOLDER
[c] REPLACED (LIKE OR EQUIVALENT).
[d] REPLACEMENT (MODIFICATION).
[e] WHEN REQUIRED BY CONSTRUCTION CODE.

RETENTION PERIOD: LIFETIME RESPONSIBLE ORGANIZATION: NM-PROCESSES/SPECIAL PROGRAMS

TENNESSEE VALLEY AUTHORITY
BROWNS FERRY NUCLEAR PLANT
SITE DIRECTOR STANDARD PRACTICE

SEP 22 1989

FORM SDSP-403
FORM NIS-2 ATTACHMENT

1. (OWNER) TENNESSEE VALLEY AUTHORITY
NUCLEAR POWER

DATE 5/19/90

2. (PLANT) BROWNS FERRY NUCLEAR PLANT
P.O. BOX 2000
DECATUR, ALABAMA

SHEET [a] 118 OF 255

MR# 620373

3. WORK PERFORMED BY: TVA
COMPANY
P.O. BOX 2000
ADDRESS
DECATUR, AL
CITY AND STATE

TYPE CODE SYMBOL STAMP [b] N/A
AUTHORIZATION NO. [b] N/A
EXPIRATION DATE [b] N/A

4. IDENTIFICATION OF SYSTEM 73 - HPCI

5(A). APPLICATION CONSTRUCTION CODE ANSI B31.1 19 67
EDITION 67 ADDENDA N/A CODE CASE N/A

5(B). APPLICATION EDITION OF SECTION XI UTILIZED FOR REPAIRS OR REPLACEMENTS: 1980

6(A). NAME OF COMPONENT(S) AND DESCRIPTION (INCLUDE SIZE, CAPACITY, MATERIAL, AND LOCATION AS NEEDED TO AID IN IDENTIFICATION)
5-6-90 MRM ~~2-73-27~~ 2-FCV-73-27 16 inch Crane Gate valve
Model L-150 Crane DWG.# PB-139991 Contract # 90744

6(B). NAME OF MANUFACTURER CRANE Co.
ADDRESS OF MANUFACTURER (IF KNOWN) N/A

6(c). MANUFACTURER'S SERIAL NUMBER N/A

6(D). NATIONAL BOARD NUMBER (IF APPLICABLE) N/A

6(E). OTHER IDENTIFICATION (SUBASSEMBLY NUMBER, HEAT NUMBER, ETC.)
Contract# 90744 CNIM 1.3.1-1D (7)

6(F). YEAR BUILT N/A CODE CLASS ☐ 1 ☒ 2

6(G). REPAIRED ☐ REPLACED ☒ [c] REPLACEMENT ☐ [d]

6(H). ASME CODE STAMPED YES ☐ NO ☒

7. BRIEF DESCRIPTION OF REPAIR OR REPLACEMENT WORK PERFORMED.
REPLACED SHORT BONNET STUDS ON 2-FCV-73-27

8. TESTS CONDUCTED: HYDROSTATIC ☐ PNEUMATIC ☐
NOMINAL OPERATING PRESSURE ☐ OTHER ☐
PRESSURE _____ PSI TEST TEMPERATURE _____ F°

9. REMARKS: NO Valve Testing Required Per Work Performed.

( ) APPLICABLE MANUFACTURERS DATA REPORT [e] TO BE ATTACHED.
RESPONSIBLE ENGR. Allen E. Cole /Mech. MAINT DATE 5/19/90
ORGANIZATION
ANII _____ DATE _____

REF CAQR# CHA 890003713

[a] SHEET NOS. FILLED IN BY TESTING AND DIAGNOSTIC PROGRAMS BRANCH.
[b] FOR WORK PERFORMED BY CERTIFICATE HOLDER
[c] REPLACED (LIKE OR EQUIVALENT).
[d] REPLACEMENT (MODIFICATION).
[e] WHEN REQUIRED BY CONSTRUCTION CODE.

RETENTION PERIOD: LIFETIME RESPONSIBLE ORGANIZATION: NM-PROCESSES/SPECIAL PROGRAMS

Tennessee Valley Authority
Bronws Ferry Nuclear Plant

Form 164
BF 17.8
Page 4 Of 5
AUG 0 7 1985

SHEET 119 of 255

ASME SECTION XI SUMMARY REPORT

*Tennessee Valley Authority
*Office of Nuclear Power, 1750 CST2-C
*Browns Ferry Nuclear Plant Unit 2
*P.O. Box 2000
*Decatur, Alabama

Comm. Service Date 1974
System CRD 85
TVA Class C
Workplan/MR No. A-625856

Furnish the following for the repair or replacement for the as-left condition of the component (after field work is complete). Mark all blanks (indicate NA for items which do not apply).

National Board Number of repaired or replaced component. N/A

Name of the components and description (include size, capacity, material, and location)--These requirements may be satisfied by attaching an applicable drawing.
2" 900 LB. TYPE "Y" GLOBE VALVE VALVE BODY ASME SA105, CRD VENT VALVE EAST HEADER SOUTH END REACTOR BLDG EL. 565'-0".

Name of Manufacturer CRANE FLOWMATICS

Address of Manufacturer (if known) WARRINGTON, PA

Manufacturer's component identification numbers (i.e., serial number, subassembly number, heat number). If more than one component is replaced, attach weld map and identify items by item number. VALVE, 2" GLOBE, SOCKET WELD, SERIAL # 5771-2 TVA CONTRACT NO. 86PNR-371712 ITEM #1

Brief description of repair or replacement work performed, including conditions observed and corrective measures taken, as applicable (reference DCR, CAR, etc.; drawing may be attached with attached affected area circled). VALVE BODY WAS CUTOUT & REPLACED WITH NEW VALVE BODY. OLD VALVE BODY HAD ABOUT 2/3 OF SEAT MISSING. EXISTING ACTUATOR WAS INSTALLED TO NEW VALVE BODY.

Brief description of post repair or replacement tests and examintaions (if required) by instruction or procedure number. N-VT-3 & N-PT-1 PER MR A-625856. HYDROSTATIC TESTING PER WP # 2134-84.

ANII/ANI name, employer, and business address THE HARTFORD STEAM BOILER INSPECTION AND INSURANCE CO. ATLANTA, GA 30338

Date work completed 8-2-86

C.W. Scott , 8-2-86
Cognizant Engineer Date

Retention: Period - Lifetime, Responsibility - Modifications Supervisor

*Revision

0510K

Tennessee Valley Authority
Browns Ferry Nuclear Plant

Form 164
BF 17.8
Page 4 Of 5 SHEET 120 of 255
AUG 0 7 1995

ASME SECTION XI SUMMARY REPORT

*Tennessee Valley Authority
*Office of Nuclear Power, 1750 CST2-C
*Browns Ferry Nuclear Plant Unit 2
*P.O. Box 2000
*Decatur, Alabama

Comm. Service Date
System 68 Recir
TVA Class
Workplan/MR No. 625872

Furnish the following for the repair or replacement for the as-left condition of the component (after field work is complete). Mark all blanks (indicate NA for items which do not apply).

National Board Number of repaired or replaced component. NA

Name of the components and description (include size, capacity, material, and location)—These requirements may be satisfied by attaching an applicable drawing.
28" OD. RECIRCULATION Piping / Unit 2 Drywell (Browns Ferry)

Name of Manufacturer NA

Address of Manufacturer (if known) NA

Manufacturer's component identification numbers (i.e., serial number, subassembly number, heat number). If more than one component is replaced, attach weld map and identify items by item number.
NA

Brief description of repair or replacement work performed, including conditions observed and corrective measures taken, as applicable (reference DCR, CAR, etc.; drawing may be attached with attached affected area circled). Weld removal of a Temp. Attachment / Performed (NDE) Visual and Penetrant examinations of affected area, also N-UT-26 for thickness.

Brief description of post repair or replacement tests and examintaions (if required) by instruction or procedure number. (NDE) Visual (N-VT-3), Penetrant (N-PT-1), (N-UT-2C)

ANII/ANI name, employer, and business address

Date work completed 3/27/86

Marshall Lemmond / 3/28/86
Cognizant Engineer Date

Retention: Period - Lifetime, Responsibility - Modifications Supervisor

*Revision

0510K

MR-A-625872 page 8 of ~~16~~ 13

TENNESSEE VALLEY AUTHORITY
BROWNS FERRY NUCLEAR PLANT
SITE DIRECTOR STANDARD PRACTICE

SEP 22 1989

FORM PAGE 1 OF 1
FORM SDSP-403
SDSP 13.3

FORM SDSP-403
FORM NIS-2 ATTACHMENT

SHEET 121 of 255

*REFERENCE CAQR CHA 890003713

1. (OWNER) TENNESSEE VALLEY AUTHORITY
NUCLEAR POWER

DATE 04/28/90

2. (PLANT) BROWNS FERRY NUCLEAR PLANT
P.O. BOX 2000
DECATUR, ALABAMA

SHEET [a] 1 OF 1

MRH 625911

3. WORK PERFORMED BY: TVA
COMPANY

TYPE CODE SYMBOL STAMP [b] N/A

P.O. Box 2000
ADDRESS

AUTHORIZATION NO. [b] N/A

DECATUR, ALABAMA
CITY AND STATE

EXPIRATION DATE [b] N/A

4. IDENTIFICATION OF SYSTEM 74 - RHR

5(A). APPLICATION CONSTRUCTION CODE USAS B31.1.0 19 67
EDITION THRU ADDENDA N/A CODE CASE ~~2~~ ~~0~~ N/A

5(B). APPLICATION EDITION OF SECTION XI UTILIZED FOR REPAIRS OR REPLACEMENTS: 1980

6(A). NAME OF COMPONENT(S) AND DESCRIPTION (INCLUDE SIZE, CAPACITY, MATERIAL, AND LOCATION AS NEEDED TO AID IN IDENTIFICATION) 2-HGR-74-H-2
1/2 X 2 1/2 X 2 3/4 in. PL LUG, TORUS ROOF, UNIT-2
EL-555, R-8, R9, R45, REACTOR BLDG, SUPPORT H-2

6(B). NAME OF MANUFACTURER TVA
ADDRESS OF MANUFACTURER (IF KNOWN) PO BOX 2000 DECATUR AL

6(c). MANUFACTURER'S SERIAL NUMBER N/A

6(D). NATIONAL BOARD NUMBER (IF APPLICABLE) N/A

6(E). OTHER IDENTIFICATION (SUBASSEMBLY NUMBER, HEAT NUMBER, ETC.) HEAT NUMBER
743302, SUPPORT: H-2

6(F). YEAR BUILT 86 CODE CLASS ☐ 1 ☒ 2

6(G). REPAIRED ☐ REPLACED ☐ [c] REPLACEMENT ☒ [d]

6(H). ASME CODE STAMPED YES ☐ NO ☒

7. BRIEF DESCRIPTION OF REPAIR OR REPLACEMENT WORK PERFORMED.
REMOVED 1/4 X 2 1/2 X 2 3/4 PL LUG
REPLACED with 1/2 X 2 1/2 X 2 3/4 PL LUG

8. TESTS CONDUCTED: HYDROSTATIC ☐ PNEUMATIC ☐
NOMINAL OPERATING PRESSURE ☐ OTHER ☐
PRESSURE N/A PSI TEST TEMPERATURE N/A F°

9. REMARKS: NONE

( ) APPLICABLE MANUFACTURERS DATA REPORT [e] TO BE ATTACHED.

RESPONSIBLE ENGR. R.W. AYCOCK / SYSTEM DATE 04/28/90
ORGANIZATION

ANII R. Russell Y. DATE 5-19-90

[a] SHEET NOS. FILLED IN BY TESTING AND DIAGNOSTIC PROGRAMS BRANCH.
[b] FOR WORK PERFORMED BY CERTIFICATE HOLDER
[c] REPLACED (LIKE OR EQUIVALENT).
[d] REPLACEMENT (MODIFICATION).
[e] WHEN REQUIRED BY CONSTRUCTION CODE.

RETENTION PERIOD: LIFETIME RESPONSIBLE ORGANIZATION: NM-PROCESSES/SPECIAL PROGRAMS

2114 1972

SHEET 122 of 255

Tennessee Valley Authority
Browns Ferry Nuclear Plant

Form 164
BF 17.8
Page 4 Of 5
AUG 0 7 1985

ASME SECTION XI SUMMARY REPORT

*Tennessee Valley Authority
*Office of Nuclear Power, 1750 CST2-C
*Browns Ferry Nuclear Plant Unit 2
*P.O. Box 2000
*Decatur, Alabama

Comm. Service Date 1974
System Core-Spray
TVA Class 1
Workplan/MR No. A-700641

Furnish the following for the repair or replacement for the as-left condition of the component (after field work is complete). Mark all blanks (indicate NA for items which do not apply).

National Board Number of repaired or replaced component. N/A

Name of the components and description (include size, capacity, material, and location)—These requirements may be satisfied by attaching an applicable drawing.
Core Spray Testable Check Valve 2-FCV-75-26, 12", Rockwell Tilting Disc.

Name of Manufacturer Rockwell

Address of Manufacturer (if known) N/A

Manufacturer's component identification numbers (i.e., serial number, subassembly number, heat number). If more than one component is replaced, attach weld map and identify items by item number. Rockwell, Tilting Disc 12" Check Valve, Contract # 96744 Drawing 2-PD-420868

Brief description of repair or replacement work performed, including conditions observed and corrective measures taken, as applicable (reference DCR, CAR, etc.; drawing may be attached with attached affected area circled). Weld build up Hing pin Area of Disc and machine down to obtain acceptable clearances between Pin & bushings

Brief description of post repair or replacement tests and examintaions (if required) by instruction or procedure number. N-VT-3, N-PT-1, SI 3.2, SI 4.7.A.2.g (LLRT)

ANII/ANI name, employer, and business address Roosevelt Russell, Jr. The Hartford Steam Boiler Inspection and Insurance Co., 1117 Perimeter Center West, Suite E-301, Atlanta, Ga. 30338

Date work completed 8-23-88

Allat E. Cooke / 8/23/88
Cognizant Engineer Date

Retention: Period - Lifetime, Responsibility - Modifications Supervisor

*Revision

0510K

Lifetime/Responsibility

Tennessee Valley Authority
Browns Ferry Nuclear Plant

Form 164
BF 17.8
Page 4 of 5
AUG 0 7 1985

ASME SECTION XI SUMMARY REPORT

*Tennessee Valley Authority
*Office of Nuclear Power, 1750 CST2-C
*Browns Ferry Nuclear Plant Unit 2
*P.O. Box 2000
*Decatur, Alabama

Comm. Service Date 1 MAR 1975
System RHR
TVA Class D
Weldplan/MR No. A-100025

Furnish the following for the repair or replacement for the as-left condition of the component (after field work is complete). Mark all blanks (indicate NA for items which do not apply).

National Board Number of repaired or replaced component. N/A

Name of the components and description (include size, capacity, material, and location)—These requirements may be satisfied by attaching an applicable drawing. Dwg# 48W1257-1 R6

Name of Manufacturer N/A; Existing

Address of Manufacturer (if known) N/A; Existing

Manufacturer's component identification numbers (i.e., serial number, subassembly number, heat number). If more than one component is replaced, attach weld map and identify items by item number. N/A; only weld repair required

Brief description of repair or replacement work performed, including conditions observed and corrective measures taken, as applicable (reference DCR, CAR, etc.; drawing may be attached with attached affected area circled). Build up undersized welds

Brief description of post repair or replacement tests and examintaions (if required) by instruction or procedure number. N-VT-3; N-PT-1 or N-MT-1

ANII/ANI name, employer, and business address Bill Rice/Roosevelt Russell Hartford Steam Boiler Inspection Co. Atlanta, Ga 30338

Date work completed 6/11/86

[signature] 6/11/86
Cognizant Engineer Date

Retention: Period - Lifetime, Responsibility - Modifications Supervisor

*Revision

051CK

pg5

Tennessee Valley Authority
Bronws Ferry Nuclear Plant

Form 164
BF 17.8
Page 4 Of 5
AUG 0 7 1985

SHEET 124 of 255

ASME SECTION XI SUMMARY REPORT

*Tennessee Valley Authority
*Office of Nuclear Power, 1750 CST2-C
*Browns Ferry Nuclear Plant Unit 2
*P.O. Box 2000
*Decatur, Alabama

Comm. Service Date 1974
System RWCU
TVA Class B
Workplan/MR No. A-706173

Furnish the following for the repair or replacement for the as-left condition of the component (after field work is complete). Mark all blanks (indicate NA for items which do not apply).

National Board Number of repaired or replaced component.* N/A

Name of the components and description (include size, capacity, material, and location)—These requirements may be satisfied by attaching an applicable drawing. 4" Pressure Seal Swing Check Valve disc Carbon Steel A216 WCB with Stellite 6 hardfacing

Name of Manufacturer VELAN

Address of Manufacturer (if known) PLATTSBURGH, New York

Manufacturer's component identification numbers (i.e., serial number, subassembly number, heat number). If more than one component is replaced, attach weld map and identify items by item number. P/N — 8205-3-31-for disc

Brief description of repair or replacement work performed, including conditions observed and corrective measures taken, as applicable (reference DCR, CAR, etc.; drawing may be attached with attached affected area circled). Seat lapped out of old disc - replaced with new disc. old disc pist was twisted off trying to disassemble valve internals

Brief description of post repair or replacement tests and examintaions (if required) by instruction or procedure number. SI-4.7.A.2.g-3 and S.I-3.2.6 and SI-3.3.1.a

ANII/ANI name, employer, and business address Roosevelt Russell, Jr. Hartford Steam Boiler Inspection and Insurance Co. 1117 Perimeter Center West, Suite E-301 Atlanta, Ga. 30338

Date work completed 4-27-87

C. W. Pratt / 11-18-87
Cognizant Engineer Date

Retention: Period - Lifetime, Responsibility - Modifications Supervisor

*Revision

0510K

Tennessee Valley Authority
Browns Ferry Nuclear Plant

Form 164
BF 17.8
Page 4 of 5
MAR 1 9 1986

ASME SECTION XI SUMMARY REPORT

SHEET 125 of 255

Plant BFNP
System 01 MAIN STEAM
TVA Class A SECTION III CLASS 1
~~Workplan~~/MR No. A-706180

Furnish the following for the repair or replacement for the as-left condition of the component (after field work is complete). Mark all blanks (indicate NA for items which do not apply).

National Board Number of repaired or replaced component. N/A

Name of the components and description (include size, capacity, material, and location)--These requirements may be satisfied by attaching an applicable drawing. MAIN STEAM RELIEF VALVE (6" INLET 1500# FLANGED CONNECTION BY 10" OUTLET 300# FLANGED CONNECTION) DESIGN PRESSURE 1250 PSI, C/S ASME SA105, REACTOR BLDG MAIN STEAM HEADER

Name of Manufacturer TARGET ROCK CORPORATION

Address of Manufacturer (if known) EAST FARMINGDALE, NEW YORK

Manufacturer's component identification numbers (i.e., serial number, subassembly number, heat number). If more than one component is replaced, attach weld map and identify items by item number. MSRV SN#1033 Model 7567F Position 1-34

Brief description of repair or replacement work performed, including conditions observed and corrective measures taken, as applicable (reference DCR, CAR, etc.; drawing may be attached with affected area circled). REPLACED OLD STUD WHICH GALLED WHEN REMOVING BASE TO BODY FOR INSPECTION. REPLACED WITH NEW STUD.

Brief description of post repair or replacement tests and examinations (if required) by instruction or procedure number. N-VT-1 ON NEW STUD INSTALLED. TORQUE OF BASE TO BODY MR 645499 & 706165. TENSION & TORQUE OF INLET & OUTLET STUDS DONE ON MR A-162242

ANII/ANI name, employer, and business address TAC HARTFORD STEAM BOILER INSPECTION AND INSURANCE COMPANY ATLANTA, GA.

Date work completed

R.H. Trowbridge 1 8/8/86
Cognizant Engineer Date

Retention: Period - Lifetime, Responsibility - Modifications Supervisor

Tennessee Valley Authority
Browns Ferry Nuclear Plant

Form 164
BF 17.8
Page 4 of 5
MAR 1 9 1986

SHEET 126 of 255

ASME SECTION XI SUMMARY REPORT

Plant BFNP
System 3
TVA Class A (SECTION III CLASS 1)
~~Workplan~~/MR No. A-706183

Furnish the following for the repair or replacement for the as-left condition of the component (after field work is complete). Mark all blanks (indicate NA for items which do not apply).

National Board Number of repaired or replaced component. N/A

Name of the components and description (include size, capacity, material, and location)--These requirements may be satisfied by attaching an applicable drawing. 24" W.E. CHECK VALVE, CAST STEEL ASTM A216-WCB, UNIT 2 REACTOR BLDG (STEAM TUNNEL).

Name of Manufacturer ATWOOD & MORRILL COMPANY

Address of Manufacturer (if known) SALEM, MASS.

Manufacturer's component identification numbers (i.e., serial number, subassembly number, heat number). If more than one component is replaced, attach weld map and identify items by item number. VENDOR DWG NO. 20788-H, TVA CONTRACT NO. 90744, TVA TAG NO. BF 2-2-96

Brief description of repair or replacement work performed, including conditions observed and corrective measures taken, as applicable (reference DCR, CAR, etc.; drawing may be attached with affected area circled). REPLACED SEAL PLATE ITEM #12 DWG. 20788-H. VALVE OPEN FOR INTERNAL INSPECTION NO MAINTENANCE PERFORMED ON THIS WORK PACKAGE.

Brief description of post repair or replacement tests and examinations (if required) by instruction or procedure number. ~~HAT~~ VALVE FAILED LLRT AND WILL BE WORKED ON MR A706960

ANII/ANI name, employer, and business address THE HARTFORD STEAM BOILER INSPECTION AND INSURANCE CO., ATLANTA, GA

Date work completed 8/7/86

Albert E. Cooke 8-7-86
Cognizant Engineer Date

Retention: Period - Lifetime, Responsibility - Modifications Supervisor

pg 12961

Tennessee Valley Authority
Browns Ferry Nuclear Plant

Form 164
BF 17.8
Page 4 Of 5 SHEET 127 of 255
AUG 0 7 1985

ASME SECTION XI SUMMARY REPORT

*Tennessee Valley Authority
*Office of Nuclear Power, 1750 CST2-C
*Browns Ferry Nuclear Plant Unit 2
*P.O. Box 2000
*Decatur, Alabama

Comm. Service Date 1974
System HPCI 73
TVA Class A Section III Class 1
Workplan/HR No. A-706191

Furnish the following for the repair or replacement for the as-left condition of the component (after field work is complete). Mark all blanks (indicate NA for items which do not apply).

National Board Number of repaired or replaced component. None

Name of the components and description (include size, capacity, material, and location)--These requirements may be satisfied by attaching an applicable drawing.
10" HPCI Pressure Seal Gate Valve, Carbon Steel A216-WCB, Located as outboard containment isolation and HPCI Steam Supply Valve.

Name of Manufacturer Crane - Chapman

Address of Manufacturer (if known) 203 Hanover St, Indian Orchard, Mass.

Manufacturer's component identification numbers (i.e., serial number, subassembly number, heat number). If more than one component is replaced, attach weld map and identify items by item number. Vendor Dwg No. PB-129989 GE-23-16 TVA CONTRACT 90744/91EO

Brief description of repair or replacement work performed, including conditions observed and corrective measures taken, as applicable (reference DCR, CAR, etc.; drawing may be attached with attached affected area circled). Replace pressure seal ring with a new one.

Brief description of post repair or replacement tests and examintaions (if required) by instruction or procedure number. N-VT-1, INSERVICE LEAK CHECK AT OPERATING (NORMAL) PRESSURE.

ANII/ANI name, employer, and business address THE HARTFORD STEAM Boiler Inspection & Insurance Co., ATLANTA, GA.

Date work completed 8/27/86

Cognizant Engineer 2/7/91 Date

Retention: Period - Lifetime, Responsibility - Modifications Supervisor

*Revision

0510K

TENNESSEE VALLEY AUTHORITY
BROWNS FERRY NUCLEAR PLANT
SITE DIRECTOR STANDARD PRACTICE

SEP 22 1989

FORM SDSP-403
SDSP 13.3

FORM SDSP-403
FORM NIS-2 ATTACHMENT

1. (OWNER) TENNESSEE VALLEY AUTHORITY
NUCLEAR POWER

DATE 5/24/90

2. (PLANT) BROWNS FERRY NUCLEAR PLANT
P.O. BOX 2000
DECATUR, ALABAMA

SHEET [a] 128 OF 255

MR#706960

3. WORK PERFORMED BY: TVA
COMPANY

TYPE CODE SYMBOL STAMP [b] N/A

P.O. BOX 2000
ADDRESS

AUTHORIZATION NO. [b] N/A

DECATUR, AL
CITY AND STATE

EXPIRATION DATE [b] N/A

4. IDENTIFICATION OF SYSTEM 3 - REACTOR FEED WATER

5(A). APPLICATION CONSTRUCTION CODE ANSI B31.1 19 67
EDITION N/A ADDENDA N/A CODE CASE N/A

5(B). APPLICATION EDITION OF SECTION XI UTILIZED FOR REPAIRS OR REPLACEMENTS: 1980

6(A). NAME OF COMPONENT(S) AND DESCRIPTION (INCLUDE SIZE, CAPACITY, MATERIAL, AND LOCATION AS NEEDED TO AID IN IDENTIFICATION)
2-CKV-3-554 - ATWood & Morrill, 24" SWING check S/N 2-994

6(B). NAME OF MANUFACTURER ATWood & Morrill
ADDRESS OF MANUFACTURER (IF KNOWN) N/A

6(c). MANUFACTURER'S SERIAL NUMBER S/N 2-994

6(D). NATIONAL BOARD NUMBER (IF APPLICABLE) N/A

6(E). OTHER IDENTIFICATION (SUBASSEMBLY NUMBER, HEAT NUMBER, ETC.)
Vendor DWG 20788-4, Contract # 90744 (1.3.7-7)

6(F). YEAR BUILT N/A CODE CLASS ☒ 1 ☐ 2

6(G). REPAIRED ☐ REPLACED ☒ [c] REPLACEMENT ☐ [d]

6(H). ASME CODE STAMPED YES ☐ NO ☒

7. BRIEF DESCRIPTION OF REPAIR OR REPLACEMENT WORK PERFORMED.
INSTALLED NEW SEAL PLATE ON 2-CKV-3-554

8. TESTS CONDUCTED: HYDROSTATIC ☐ PNEUMATIC ☐
NOMINAL OPERATING PRESSURE ☐ OTHER ☐
PRESSURE _____ PSI TEST TEMPERATURE _____ F°

9. REMARKS:

( ) APPLICABLE MANUFACTURERS DATA REPORT [e] TO BE ATTACHED.

RESPONSIBLE ENGR. Albert E. Cutler / 5/24/90 DATE 5/24/90
mech. maint.
ORGANIZATION

ANII * R. Russell DATE 5-25-90

* REF CAQRA CHA 8900003713

[a] SHEET NOS. FILLED IN BY TESTING AND DIAGNOSTIC PROGRAMS BRANCH.
[b] FOR WORK PERFORMED BY CERTIFICATE HOLDER
[c] REPLACED (LIKE OR EQUIVALENT).
[d] REPLACEMENT (MODIFICATION).
[e] WHEN REQUIRED BY CONSTRUCTION CODE.

RETENTION PERIOD: LIFETIME RESPONSIBLE ORGANIZATION: NM-PROCESSES/SPECIAL PROGRAMS

TENNESSEE VALLEY AUTHORITY
BROWNS FERRY NUCLEAR PLANT
SITE DIRECTOR STANDARD PRACTICE

SEP 22 1989

FORM PAGE 1 OF 1
FORM SDSP-403
SDSP 13.3

FORM SDSP-403
FORM NIS-2 ATTACHMENT

SHEET 129 of 255

1. (OWNER) TENNESSEE VALLEY AUTHORITY
NUCLEAR POWER

DATE 05/31/90

2. (PLANT) BROWNS FERRY NUCLEAR PLANT
P.O. BOX 2000
DECATUR, ALABAMA

SHEET [a] 1 OF 1

MRH 710433

3. WORK PERFORMED BY: TVA
COMPANY

TYPE CODE SYMBOL STAMP [b] N/A

PO BOX 2000
ADDRESS

AUTHORIZATION NO. [b] N/A

DECATUR ALABAMA
CITY AND STATE

EXPIRATION DATE [b] N/A

4. IDENTIFICATION OF SYSTEM RECIRC, SYSTEM-68, "SS5B"

5(A). APPLICATION CONSTRUCTION CODE USAS B31.1.0 19 67
EDITION THRU ADDENDA N/A CODE CASE N/A

5(B). APPLICATION EDITION OF SECTION XI UTILIZED FOR REPAIRS OR REPLACEMENTS: 1980

6(A). NAME OF COMPONENT(S) AND DESCRIPTION (INCLUDE SIZE, CAPACITY, MATERIAL, AND LOCATION AS NEEDED TO AID IN IDENTIFICATION)
UNIT-2, RXBLDG, EL-583, AZ 98°, SS5B

6(B). NAME OF MANUFACTURER BERGEN PATERSON
ADDRESS OF MANUFACTURER (IF KNOWN) UNKNOWN

6(c). MANUFACTURER'S SERIAL NUMBER UNKNOWN

6(D). NATIONAL BOARD NUMBER (IF APPLICABLE) N/A

6(E). OTHER IDENTIFICATION (SUBASSEMBLY NUMBER, HEAT NUMBER, ETC.) N/A

6(F). YEAR BUILT N/A CODE CLASS ☒ 1 ☐ 2

6(G). REPAIRED ☒ REPLACED ☐ [c] REPLACEMENT ☐ [d]

6(H). ASME CODE STAMPED YES ☐ NO ☒

7. BRIEF DESCRIPTION OF REPAIR OR REPLACEMENT WORK PERFORMED. RWA 05/31/90
REMOVED SNUBBER, TEST AS FOUND" REBUILD, TEST AS ~~LEFT~~ LEFT", "REINSTALL"

8. TESTS CONDUCTED: HYDROSTATIC ☐ PNEUMATIC ☐
NOMINAL OPERATING PRESSURE ☐ OTHER ☐
PRESSURE N/A PSI TEST TEMPERATURE N/A F°

9. REMARKS:

( ) APPLICABLE MANUFACTURERS DATA REPORT [e] TO BE ATTACHED.
RESPONSIBLE ENGR. R.W. AYCOCK / SYSTEM DATE 05/31/90
ORGANIZATION

ANII DATE

* REF CAQR# CHA 890003713

[a] SHEET NOS. FILLED IN BY TESTING AND DIAGNOSTIC PROGRAMS BRANCH.
[b] FOR WORK PERFORMED BY CERTIFICATE HOLDER
[c] REPLACED (LIKE OR EQUIVALENT).
[d] REPLACEMENT (MODIFICATION).
[e] WHEN REQUIRED BY CONSTRUCTION CODE.

RETENTION PERIOD: LIFETIME RESPONSIBLE ORGANIZATION: NM-PROCESSES/SPECIAL PROGRAMS

TENNESSEE VALLEY AUTHORITY
BROWNS FERRY NUCLEAR PLANT
SITE DIRECTOR STANDARD PRACTICE

SEP 22 1989

Pg. 98/14

FORM PAGE 1 OF 1
FORM SDSP-403
SDSP 13.3

FORM SDSP-403
FORM NIS-2 ATTACHMENT

MRA-712033

1. (OWNER) TENNESSEE VALLEY AUTHORITY
NUCLEAR POWER

DATE 4-8-90

2. (PLANT) BROWNS FERRY NUCLEAR PLANT
P.O. BOX 2000
DECATUR, ALABAMA

SHEET [a] 130 OF 255

3. WORK PERFORMED BY: TVA
COMPANY

P.O. Box 2000
ADDRESS

DECATUR, AL
CITY AND STATE

TYPE CODE SYMBOL STAMP [b] N/A

AUTHORIZATION NO. [b] N/A

EXPIRATION DATE [b] N/A

4. IDENTIFICATION OF SYSTEM System 068/R. Recirc.

5(A). APPLICATION CONSTRUCTION CODE USAS B31.1.0 19 67
EDITION Thru ADDENDA N/A CODE CASE N/A

5(B). APPLICATION EDITION OF SECTION XI UTILIZED FOR REPAIRS OR REPLACEMENTS: 1989

6(A). NAME OF COMPONENT(S) AND DESCRIPTION (INCLUDE SIZE, CAPACITY, MATERIAL, AND LOCATION AS NEEDED TO AID IN IDENTIFICATION)
Reactor Base Metal Evaluation on W10x25 for Support 4762408-11
Location - Unit 2, Az 135° Radius 20'-7½" at Elev. 549'-11".

6(B). NAME OF MANUFACTURER Tennessee Valley Authority
ADDRESS OF MANUFACTURER (IF KNOWN) PO Box 2000 Decatur, AL

6(C). MANUFACTURER'S SERIAL NUMBER N/A

6(D). NATIONAL BOARD NUMBER (IF APPLICABLE) N/A

6(E). OTHER IDENTIFICATION (SUBASSEMBLY NUMBER, HEAT NUMBER, ETC.) N/A

6(F). YEAR BUILT N/A CODE CLASS ☒ 1 ☐ 2

6(G). REPAIRED ☒ REPLACED ☐ [c] REPLACEMENT ☐ [d]

6(H). ASME CODE STAMPED YES ☐ NO ☒

7. BRIEF DESCRIPTION OF REPAIR OR REPLACEMENT WORK PERFORMED.
Reactor Base Metal Evaluation on W10x25 for Support 4762408-11

8. TESTS CONDUCTED: HYDROSTATIC ☐ PNEUMATIC ☐
NOMINAL OPERATING PRESSURE ☐ OTHER ☐
PRESSURE N/A PSI TEST TEMPERATURE N/A F°

9. REMARKS: None
MR# 712033

( ) APPLICABLE MANUFACTURERS DATA REPORT [e] TO BE ATTACHED [e]

RESPONSIBLE ENGR. [signature] DATE 9-8-90
ORGANIZATION

ANII [signature] DATE 9-8-90

[a] SHEET NOS. FILLED IN BY TEC. ENG AND DIAGNOSTIC PROGRAMS BRANCH.
[b] FOR WORK PERFORMED BY CERTIFICATE HOLDER
[c] REPLACED (LIKE OR EQUIVALENT).
[d] REPLACEMENT (MODIFICATION).
[e] WHEN REQUIRED BY CONSTRUCTION CODE.

RETENTION PERIOD: LIFETIME RESPONSIBLE ORGANIZATION: NM-PROCEDURES/SPECIAL PROGRAMS

Pg. 3

TENNESSEE VALLEY AUTHORITY
BROWNS FERRY NUCLEAR PLANT
SITE DIRECTOR STANDARD PRACTICE

SEP 22 1989

FORM PAGE 1 OF 1
FORM SDSP-403
SDSP 13.3

FORM SDSP-403
FORM NIS-2 ATTACHMENT

1. (OWNER) TENNESSEE VALLEY AUTHORITY
NUCLEAR POWER

DATE 4-28-90

MR# 712677

2. (PLANT) BROWNS FERRY NUCLEAR PLANT (UNIT 2)
P.O. BOX 2000
DECATUR, ALABAMA

SHEET 131 OF 255

3. WORK PERFORMED BY: TVA (COMPANY)
P.O. BOX 2000 (ADDRESS)
DECATUR, ALABAMA (CITY AND STATE)

TYPE CODE SYMBOL STAMP[b] N/A
AUTHORIZATION NO.[b] N/A
EXPIRATION DATE[b] N/A

4. IDENTIFICATION OF SYSTEM SYSTEM 085 - CONTROL ROD DRIVE HYDRAULIC 4-28-90

5(A). APPLICATION CONSTRUCTION CODE USAS B31.1.0 19 67
EDITION Edn ADDENDA N/A CODE CASE N/A

5(B). APPLICATION EDITION OF SECTION XI UTILIZED FOR REPAIRS OR REPLACEMENTS: 1980

6(A). NAME OF COMPONENT(S) AND DESCRIPTION (INCLUDE SIZE, CAPACITY, MATERIAL, AND LOCATION AS NEEDED TO AID IN IDENTIFICATION)
BASE METAL REPAIR ON 1" Ø CROW INSERT LINE #2631, 12" EAST OF SUPPORT 47N2968-113

6(B). NAME OF MANUFACTURER TENNESSEE VALLEY AUTHORITY
ADDRESS OF MANUFACTURER (IF KNOWN) PO BOX 2000, DECATUR AL

6(c). MANUFACTURER'S SERIAL NUMBER N/A

6(D). NATIONAL BOARD NUMBER (IF APPLICABLE) N/A

6(E). OTHER IDENTIFICATION (SUBASSEMBLY NUMBER, HEAT NUMBER, ETC.)

6(F). YEAR BUILT _____ CODE CLASS ☒ 1 ☐ 2

6(G). REPAIRED ☒ REPLACED ☐[c] REPLACEMENT ☐[d]

6(H). ASME CODE STAMPED YES ☐ NO ☐

7. BRIEF DESCRIPTION OF REPAIR OR REPLACEMENT WORK PERFORMED.
BASE METAL REPAIR FOR ARC-STRIKE ON 1" Ø CROW INSERT LINE #2631.

8. TESTS CONDUCTED: HYDROSTATIC ☐ PNEUMATIC ☐
NOMINAL OPERATING PRESSURE ☐ OTHER ☐
PRESSURE _____ PSI TEST TEMPERATURE _____ F°

9. REMARKS: BASE METAL REPAIR PERFORMED & DOCUMENTED ON MR# 712677

( ) APPLICABLE MANUFACTURERS DATA REPORT[e] TO BE ATTACHED.

RESPONSIBLE ENGR. [signature] DATE 4-28-90
ORGANIZATION

ANII R. Russell [signature] DATE 4-23-90

BFW 7-11-90

[a] SHEET NOS. FILLED IN BY TESTING AND DIAGNOSTIC PROGRAMS BRANCH.
[b] FOR WORK PERFORMED BY CERTIFICATE HOLDER
[c] REPLACED (LIKE OR EQUIVALENT).
[d] REPLACEMENT (MODIFICATION).
[e] WHEN REQUIRED BY CONSTRUCTION CODE.

RETENTION PERIOD: LIFETIME RESPONSIBLE ORGANIZATION: NU-PROCESSES/SPECIAL PROGRAMS

Tennessee Valley Authority
Browns Ferry Nuclear Plant

ASME SECTION XI SUMMARY REPORT

*Tennessee Valley Authority
*Office of Nuclear Power, 1750 CST2-C
*Browns Ferry Nuclear Plant Unit 2
*P.O. Box 2000
*Decatur, Alabama

Comm. Service Date 1974
System MAIN STEAM 1
TVA Class I Section III CLASS 1
Workplan/MR No. A-714802

Furnish the following for the repair or replacement for the as-left condition of the component (after field work is complete). Mark all blanks (indicate NA for items which do not apply).

National Board Number of repaired or replaced component. N/A

Name of the components and description (include size, capacity, material, and location)—These requirements may be satisfied by attaching an applicable drawing.
MAIN STEAM RELIEF VALVE (6" INLET 1500# BY 10" OUTLET 300# FLANGED CONNECTION) DESIGN PRESSURE 1250 PSI, C/S ASME SA-105, REACTOR BLDG UNIT #2

Name of Manufacturer TARGET ROCK CORPORATION

Address of Manufacturer (if known) EAST FARMINGDALE, NEW YORK

Manufacturer's component identification numbers (i.e., serial number, subassembly number, heat number). If more than one component is replaced, attach weld map and identify items by item number. MSRV S/N #1057 Model 7567F POSITION 1-18 "B" HEADER

Brief description of repair or replacement work performed, including conditions observed and corrective measures taken, as applicable (reference DCR, CAR, etc.; drawing may be attached with attached affected area circled). REPLACED 3 Ea INLET STUDS W/NUTS & 8 Ea OUTLET STUDS W/NUTS OLD STUDS WERE LOST DURING REFUELING OUTAGE.

Brief description of post repair or replacement tests and examintaions (if required) by instruction or procedure number. TORQUE OR TENSION PER MMI13 ON MR A-162242, N-VT-1 ON INLET STUDS

ANII/ANI name, employer, and business address THE HARTFORD STEAM BOILER INSPECTION AND INSURANCE CO. ATLANTA, GA

Date work completed 8/8/86

R.H. Trowbridge 8/8/86
Cognizant Engineer Date

Retention: Period - Lifetime, Responsibility - Modifications Supervisor

*Revision

0510K

Tennessee Valley Authority
Browns Ferry Nuclear Plant

Form 164
BF 17.8
Page 4 of 5
MAR 19 1985

ASME SECTION XI SUMMARY REPORT

SHEET 133 of 255

Plant BFNP (UNIT 2)
System CoreSprm 75
TVA Class 2
Workplan/MR No. 714952

Furnish the following for the repair or replacement for the as-left condition of the component (after field work is complete). Mark all blanks (indicate NA for items which do not apply).

National Board Number of repaired or replaced component. N/A

Name of the components and description (include size, capacity, material, and location)--These requirements may be satisfied by attaching an applicable drawing. 3" 300LB. Bolted Bonnet Gate Valve, Carbon Steel ASTM-A216 Grade WCB CoreSpray Quad S/W Corner Unit 2 Reactor Bldg

Name of Manufacturer VeLAN ENGINEERING COMPANY

Address of Manufacturer (if known) PLATTSBURGH, New York

Manufacturer's component identification numbers (i.e., serial number, subassembly number, heat number). If more than one component is replaced, attach weld map and identify items by item number. 3" cast Steel Gate Valve Vendor Drawing P-34538, TVA Contract No. 66C60-80744, F.G# B10-164B-2TS

Brief description of repair or replacement work performed, including conditions observed and corrective measures taken, as applicable (reference DCR, CAR, etc.; drawing may be attached with affected area circled). Repaired Yoke to Align with Bonnet Flange. Holes From Yoke Flange to Bonnet Flange were Not Perpendicular. Replaced Yoke Flange & Machined to Match Bonnet Flange

Brief description of post repair or replacement tests and examinations (if required) by instruction or procedure number. N-PT-1 on weld Removal Area & N-VT-3 And N-PT-1 on Final weld.

ANII/ANI name, employer, and business address The Hartford Steam Boiler Inspection And Insurance Co., Atlanta, GA.

Date work completed 8/7/86

[signature], 8-7-86
Cognizant Engineer Date

Retention: Period - Lifetime, Responsibility - Modifications Supervisor

TENNESSEE VALLEY AUTHORITY
BROWNS FERRY NUCLEAR PLANT
SITE DIRECTOR STANDARD PRACTICE

SEP 22 1989

FORM PAGE 1 OF 1
FORM SDSP-403
SDSP 13.3

SHEET 134 OF 255

FORM SDSP-403
FORM NIS-2 ATTACHMENT

REFERENCE CAQR# CHA 890003713

1. (OWNER) TENNESSEE VALLEY AUTHORITY
NUCLEAR POWER — DATE 06/04/90

2. (PLANT) BROWNS FERRY NUCLEAR PLANT
P.O. BOX 2000
DECATUR, ALABAMA — SHEET [a] 1 OF 1

MR# 719417

3. WORK PERFORMED BY: TVA (COMPANY) — TYPE CODE SYMBOL STAMP [b] N/A
PO BOX 2000 (ADDRESS) — AUTHORIZATION NO. [b] N/A
DECATUR ALABAMA (CITY AND STATE) — EXPIRATION DATE [b] N/A

4. IDENTIFICATION OF SYSTEM: SYSTEM-1, MAIN STEAM

5(A). APPLICATION CONSTRUCTION CODE USAS B31.1.0 19 67
EDITION THRU ADDENDA N/A CODE CASE N/A

5(B). APPLICATION EDITION OF SECTION XI UTILIZED FOR REPAIRS OR REPLACEMENTS: 1980

6(A). NAME OF COMPONENT(S) AND DESCRIPTION (INCLUDE SIZE, CAPACITY, MATERIAL, AND LOCATION AS NEEDED TO AID IN IDENTIFICATION)
UNIT-2, RXBLDG, EL-565, STEAM TUNNEL

6(B). NAME OF MANUFACTURER UNKNOWN
ADDRESS OF MANUFACTURER (IF KNOWN) UNKNOWN

6(c). MANUFACTURER'S SERIAL NUMBER N/A

6(D). NATIONAL BOARD NUMBER (IF APPLICABLE) N/A

6(E). OTHER IDENTIFICATION (SUBASSEMBLY NUMBER, HEAT NUMBER, ETC.) N/A

6(F). YEAR BUILT N/A — CODE CLASS ☐ 1 ☒ 2

6(G). REPAIRED ☒ — REPLACED ☐ [c] — REPLACEMENT ☐ [d]

6(H). ASME CODE STAMPED — YES ☐ — NO ☒

7. BRIEF DESCRIPTION OF REPAIR OR REPLACEMENT WORK PERFORMED.
REMOVED LINEAR INDICATION BY RUFFING.

8. TESTS CONDUCTED: HYDROSTATIC ☐ — PNEUMATIC ☐
NOMINAL OPERATING PRESSURE ☐ — OTHER ☐
PRESSURE N/A PSI — TEST TEMPERATURE N/A F[e]

9. REMARKS:

( ) APPLICABLE MANUFACTURERS DATA REPORT[e] TO BE ATTACHED.

RESPONSIBLE ENGR. R.W. AYCOCK / SYSTEMS — DATE 06/04/90
ORGANIZATION

ANII — DATE

* REF CAQR # CHA 89 000 3713

[a] SHEET NOS. FILLED IN BY TESTING AND DIAGNOSTIC PROGRAMS BRANCH.
[b] FOR WORK PERFORMED BY CERTIFICATE HOLDER
[c] REPLACED (LIKE OR EQUIVALENT).
[d] REPLACEMENT (MODIFICATION).
[e] WHEN REQUIRED BY CONSTRUCTION CODE.

RETENTION PERIOD: LIFETIME — RESPONSIBLE ORGANIZATION: NM-PROCESSES/SPECIAL PROGRAMS

TENNESSEE VALLEY AUTHORITY
BROWNS FERRY NUCLEAR PLANT
SITE DIRECTOR STANDARD PRACTICE

SEP 22 1989

FORM SDSP-403
FORM NIS-2 ATTACHMENT

1. (OWNER) TENNESSEE VALLEY AUTHORITY
NUCLEAR POWER — DATE 5/29/90

2. (PLANT) BROWNS FERRY NUCLEAR PLANT
P.O. BOX 2000
DECATUR, ALABAMA — SHEET [a] 135 OF 255

MR# 723454

3. WORK PERFORMED BY: TVA (COMPANY) — TYPE CODE SYMBOL STAMP [b] N/A
P.O. Box 2000 (ADDRESS) — AUTHORIZATION NO. [b] N/A
Decatur, Al. (CITY AND STATE) — EXPIRATION DATE [b] N/A

4. IDENTIFICATION OF SYSTEM System-063 / SLC

5(A). APPLICATION CONSTRUCTION CODE USAS B31.1.0 19 67
EDITION thru ADDENDA NA CODE CASE NA

5(B). APPLICATION EDITION OF SECTION XI UTILIZED FOR REPAIRS OR REPLACEMENTS: 1980

6(A). NAME OF COMPONENT(S) AND DESCRIPTION (INCLUDE SIZE, CAPACITY, MATERIAL, AND LOCATION AS NEEDED TO AID IN IDENTIFICATION)
2A SLC Pump, Rx Bldg El 639

6(B). NAME OF MANUFACTURER Union Pump Co.
ADDRESS OF MANUFACTURER (IF KNOWN) Battle Creek, MI.

6(c). MANUFACTURER'S SERIAL NUMBER NA

6(D). NATIONAL BOARD NUMBER (IF APPLICABLE) NA

6(E). OTHER IDENTIFICATION (SUBASSEMBLY NUMBER, HEAT NUMBER, ETC.) NA

6(F). YEAR BUILT NA CODE CLASS ☐ 1 ☒ 2

6(G). REPAIRED ☐ REPLACED ☒ [c] REPLACEMENT ☐ [d]

6(H). ASME CODE STAMPED YES ☐ NO ☒

7. BRIEF DESCRIPTION OF REPAIR OR REPLACEMENT WORK PERFORMED.
Replaced 3 pistons and all piston packing.

8. TESTS CONDUCTED: HYDROSTATIC ☐ PNEUMATIC ☐
NOMINAL OPERATING PRESSURE ☐ OTHER ☑
PRESSURE _____ PSI TEST TEMPERATURE _____ F°

9. REMARKS: Normal operating test.

( ) APPLICABLE MANUFACTURERS DATA REPORT [e] TO BE ATTACHED.
RESPONSIBLE ENGR. Jah Woodward DATE 5/29/90
ORGANIZATION
* ANII _____ DATE _____

*Ref: CAQR# CHA 890003713

[a] SHEET NOS. FILLED IN BY TESTING AND DIAGNOSTIC PROGRAMS BRANCH.
[b] FOR WORK PERFORMED BY CERTIFICATE HOLDER
[c] REPLACED (LIKE OR EQUIVALENT).
[d] REPLACEMENT (MODIFICATION).
[e] WHEN REQUIRED BY CONSTRUCTION CODE.

RETENTION PERIOD: LIFETIME RESPONSIBLE ORGANIZATION: NM-PROCESSES/SPECIAL PROGRAMS

TENNESSEE VALLEY AUTHORITY
BROWNS FERRY NUCLEAR PLANT
SITE DIRECTOR STANDARD PRACTICE

SEP 22 1989

FORM SDSP-403
FORM NIS-2 ATTACHMENT

1. (OWNER) TENNESSEE VALLEY AUTHORITY
NUCLEAR POWER

DATE 5/19/90

2. (PLANT) BROWNS FERRY NUCLEAR PLANT
P.O. BOX 2000
DECATUR, ALABAMA

SHEET [a] 136 OF 255

MR# 731210

3. WORK PERFORMED BY: TVA
COMPANY

P.O. BOX 2000
ADDRESS

DECATUR, AL
CITY AND STATE

TYPE CODE SYMBOL STAMP [b] N/A

AUTHORIZATION NO. [b] N/A

EXPIRATION DATE [b] N/A

4. IDENTIFICATION OF SYSTEM 75 - CORE SPRAY

5(A). APPLICATION CONSTRUCTION CODE ANSI B31.1 19 67
EDITION 67 ADDENDA N/A CODE CASE N/A

5(B). APPLICATION EDITION OF SECTION XI UTILIZED FOR REPAIRS OR REPLACEMENTS: 1980

6(A). NAME OF COMPONENT(S) AND DESCRIPTION (INCLUDE SIZE, CAPACITY, MATERIAL, AND LOCATION AS NEEDED TO AID IN IDENTIFICATION)
2-MISC-75-0006, 10" CORE SPRAY ORIFICE FLANGE STUDS
1" SA193 B7 STUDS BUNC2A 6 5/8" LONG

6(B). NAME OF MANUFACTURER N/A
ADDRESS OF MANUFACTURER (IF KNOWN) N/A

6(c). MANUFACTURER'S SERIAL NUMBER N/A

6(D). NATIONAL BOARD NUMBER (IF APPLICABLE) N/A

6(E). OTHER IDENTIFICATION (SUBASSEMBLY NUMBER, HEAT NUMBER, ETC.)
HT# 252924 STS# 5686-09616

6(F). YEAR BUILT N/A CODE CLASS ☐ 1 ☒ 2

6(G). REPAIRED ☐ REPLACED ☒ [c] REPLACEMENT ☐ [d]

6(H). ASME CODE STAMPED YES ☐ NO ☒

7. BRIEF DESCRIPTION OF REPAIR OR REPLACEMENT WORK PERFORMED.
CHANGE OUT STUDS ON 10" CORE SPRAY ORIFICE FLANGE

8. TESTS CONDUCTED: HYDROSTATIC ☐ PNEUMATIC ☐
NOMINAL OPERATING PRESSURE ☐ OTHER ☐
PRESSURE _____ PSI TEST TEMPERATURE _____ F°

9. REMARKS: No Testing Required for this Work

( ) APPLICABLE MANUFACTURERS DATA REPORT [e] TO BE ATTACHED.

RESPONSIBLE ENGR. Robert E Coiler Mech. Maint DATE 5/19/90
ORGANIZATION

ANII _____ DATE _____

* REF CAQR # CHA 890003713

[a] SHEET NOS. FILLED IN BY TESTING AND DIAGNOSTIC PROGRAMS BRANCH.
[b] FOR WORK PERFORMED BY CERTIFICATE HOLDER
[c] REPLACED (LIKE OR EQUIVALENT).
[d] REPLACEMENT (MODIFICATION).
[e] WHEN REQUIRED BY CONSTRUCTION CODE.

RETENTION PERIOD: LIFETIME RESPONSIBLE ORGANIZATION: NM-PROCESSES/SPECIAL PROGRAMS

Tennessee Valley Authority
Browns Ferry Nuclear Plant

NOV 10 1986

Form SDSP-26
SDSP-13.3

ASME SECTION XI SUMMARY REPORT

Tennessee Valley Authority
Office of Nuclear Power, 1750 CST2-C
Browns Ferry Nuclear Plant Unit 2
P.O. Box 2000
Decatur, Alabama

Comm. Service Date 3-1-75
System 01
TVA Class C
Workplan/MR No. ~~741399~~ 741377
RNB 9/4/87

Furnish the following for the repair or replacement for the as-left condition of the component (after field work is complete). Mark all blanks (indicate NA for items which do not apply).

National Board Number of repaired or replaced component. NA

Name of the components and description (include size, capacity, material, and location)—Theses requirements may be satisfied by attaching an applicable drawing. RNB 9/4/87
~~MAIN~~ MAINSTEAM RESTRAINT # RG-2-~~3~~ 4ST ~~MSR~~ LUGS, A-36 CARBON STEEL RNB 9/4/87

Name of Manufacturer NA

Address of Manufacturer (if known) NA

Manufacturer's component identification numbers (i.e., serial number, subassembly number, heat number). If more than one component is replaced, attach weld map and identify items by item number. NA

Brief description of repair or replacement work performed, including conditions observed and corrective measures taken, as applicable (reference DCR, CAR, etc.; drawing may be attached with attached affected area circled) C, RNB 9/4/
WELD REPAIR EXCAVATED AREAS AS SHOWN ON ATTACHMENT ~~B~~ WHERE LINEAR INDICATIONS WERE REMOVED.

Brief description of post repair or replacement tests and examinations (if required) by instruction or procedure number.
N-VT-2, N-MT-1

ANII/ANI name, employer, and business address HARTFORD STEAMBOILER INSP. & INSURANCE CO
1117 PERIMETER CENTER WEST, SUITE E-301
ATLANTA, GA 30338

Date work completed 11/13/87

Cognizant Engineer 11/13/87
Date

Retention: Period - Lifetime; Responsibility - Modifications Supervisor

TENNESSEE VALLEY AUTHORITY
BROWNS FERRY NUCLEAR PLANT
SITE DIRECTOR STANDARD PRACTICE

SEP 22 1989

FORM SDSP-403
FORM NIS-2 ATTACHMENT

REF. CAQR# CHA890003713

1. (OWNER) TENNESSEE VALLEY AUTHORITY
NUCLEAR POWER — DATE 06/05/90

2. (PLANT) BROWNS FERRY NUCLEAR PLANT
P.O. BOX 2000
DECATUR, ALABAMA — SHEET [a] 1 OF 1

MR# 741380

3. WORK PERFORMED BY: TVA (COMPANY) — TYPE CODE SYMBOL STAMP [b] N/A
P.O. BOX 2000 (ADDRESS) — AUTHORIZATION NO. [b] N/A
DECATUR ALABAMA (CITY AND STATE) — EXPIRATION DATE [b] N/A

4. IDENTIFICATION OF SYSTEM SYSTEM-1 MAIN STEAM

5(A). APPLICATION CONSTRUCTION CODE USAS B31.1.0 19 67
EDITION THRU ADDENDA N/A CODE CASE N/A

5(B). APPLICATION EDITION OF SECTION XI UTILIZED FOR REPAIRS OR REPLACEMENTS: 1980

6(A). NAME OF COMPONENT(S) AND DESCRIPTION (INCLUDE SIZE, CAPACITY, MATERIAL, AND LOCATION AS NEEDED TO AID IN IDENTIFICATION)
UNIT-2, RXBLDG, EL-565, RG-2-3-MSR

6(B). NAME OF MANUFACTURER N/A
ADDRESS OF MANUFACTURER (IF KNOWN) N/A

6(c). MANUFACTURER'S SERIAL NUMBER N/A

6(D). NATIONAL BOARD NUMBER (IF APPLICABLE) N/A

6(E). OTHER IDENTIFICATION (SUBASSEMBLY NUMBER, HEAT NUMBER, ETC.) N/A

6(F). YEAR BUILT N/A CODE CLASS ☐ 1 ☒ 2

6(G). REPAIRED ☒ REPLACED ☐ [c] REPLACEMENT ☐ [d]

6(H). ASME CODE STAMPED YES ☐ NO ☒

7. BRIEF DESCRIPTION OF REPAIR OR REPLACEMENT WORK PERFORMED.
GROUND INDICATION TO REMOVE INDICATION

8. TESTS CONDUCTED: HYDROSTATIC ☐ PNEUMATIC ☐
NOMINAL OPERATING PRESSURE ☐ OTHER ☐
PRESSURE N/A PSI TEST TEMPERATURE N/A F[e]

9. REMARKS:

( ) APPLICABLE MANUFACTURERS DATA REPORT[e] TO BE ATTACHED.

RESPONSIBLE ENGR. R.W. AYCOCK / SYSTEMS DATE 06/05/90
ORGANIZATION

ANII _____ DATE _____

* REF CAQR# CHA 89 0003713

[a] SHEET NOS. FILLED IN BY TESTING AND DIAGNOSTIC PROGRAMS BRANCH.
[b] FOR WORK PERFORMED BY CERTIFICATE HOLDER
[c] REPLACED (LIKE OR EQUIVALENT).
[d] REPLACEMENT (MODIFICATION).
[e] WHEN REQUIRED BY CONSTRUCTION CODE.

RETENTION PERIOD: LIFETIME RESPONSIBLE ORGANIZATION: NM-PROCESSES/SPECIAL PROGRAMS

FORM SDSP-403
FORM NIS-2 ATTACHMENT

* REF CAQR # CHA890003713

1. (OWNER) TENNESSEE VALLEY AUTHORITY
NUCLEAR POWER

DATE 6-22-90

2. (PLANT) BROWNS FERRY NUCLEAR PLANT
P.O. BOX 2000
DECATUR, ALABAMA

SHEET [a] 139 OF 255

MRA 741399

3. WORK PERFORMED BY: TVA
COMPANY

TYPE CODE SYMBOL STAMP [b] N/A

P.O. Box 2000
ADDRESS

AUTHORIZATION NO. [b] N/A

DECATUR, ALA.
CITY AND STATE

EXPIRATION DATE [b] N/A

4. IDENTIFICATION OF SYSTEM SYSTEM-01 MAINSTEAM 115-2-RG-2MSR-IA

5(A). APPLICATION CONSTRUCTION CODE USAS B31.1.0 19 67
EDITION THRU ADDENDA N/A CODE CASE N/A

5(B). APPLICATION EDITION OF SECTION XI UTILIZED FOR REPAIRS OR REPLACEMENTS: 1980

6(A). NAME OF COMPONENT(S) AND DESCRIPTION (INCLUDE SIZE, CAPACITY, MATERIAL, AND LOCATION AS NEEDED TO AID IN IDENTIFICATION)
UNIT 2 EL. 565 MAINSTEAM TUNNEL MAINSTEAM RESTRAINT
MS-2-RG-2MSR-IA

6(B). NAME OF MANUFACTURER UNKNOWN
ADDRESS OF MANUFACTURER (IF KNOWN) UNKNOWN

6(c). MANUFACTURER'S SERIAL NUMBER N/A

6(D). NATIONAL BOARD NUMBER (IF APPLICABLE) N/A

6(E). OTHER IDENTIFICATION (SUBASSEMBLY NUMBER, HEAT NUMBER, ETC.) N/A

6(F). YEAR BUILT N/A CODE CLASS ☐ 1 ☒ 2

6(G). REPAIRED ☒ REPLACED ☐ [c] REPLACEMENT ☐ [d]

6(H). ASME CODE STAMPED YES ☐ NO ☒

7. BRIEF DESCRIPTION OF REPAIR OR REPLACEMENT WORK PERFORMED.
REMOVED LINEAR INDICATIONS FROM MAINSTEAM PIPE AT INTEGRAL ATTACHMENT MS-2-RG-2MSR-IA BY GRINDING

8. TESTS CONDUCTED: HYDROSTATIC ☐ PNEUMATIC ☐
NOMINAL OPERATING PRESSURE ☐ OTHER ☐
PRESSURE N/A PSI TEST TEMPERATURE N/A F[e]

9. REMARKS: MR# A-741399

( ) APPLICABLE MANUFACTURERS DATA REPORT[e] TO BE ATTACHED.

RESPONSIBLE ENGR. Jimmy E. Kiber / TECH SUPPORT DATE 6-22-90
ORGANIZATION

ANII * DATE

* REF CAQR # CHA890003713

[a] SHEET NOS. FILLED IN BY TESTING AND DIAGNOSTIC PROGRAMS BRANCH.
[b] FOR WORK PERFORMED BY CERTIFICATE HOLDER
[c] REPLACED (LIKE OR EQUIVALENT).
[d] REPLACEMENT (MODIFICATION).
[e] WHEN REQUIRED BY CONSTRUCTION CODE.

TENNESSEE VALLEY AUTHORITY
BROWNS FERRY NUCLEAR PLANT
SITE DIRECTOR STANDARD PRACTICE

SEP 22 1989

FORM PAGE 1 OF
FORM SDSP-403
SDSP 13.3

FORM SDSP-403
FORM NIS-2 ATTACHMENT SHEET 140 of 255

* REF. CAQR UCHA 890063713

1. (OWNER) TENNESSEE VALLEY AUTHORITY
NUCLEAR POWER — DATE 06/10/90

2. (PLANT) BROWNS FERRY NUCLEAR PLANT
P.O. BOX 2000
DECATUR, ALABAMA — SHEET [a] 1 OF 1

MR# 743443

3. WORK PERFORMED BY: TVA (COMPANY) — TYPE CODE SYMBOL STAMP [b] N/A
P.O. BOX 2000 (ADDRESS) — AUTHORIZATION NO. [b] N/A
DECATUR ALABAMA (CITY AND STATE) — EXPIRATION DATE [b] N/A

4. IDENTIFICATION OF SYSTEM SYSTEM-2, MR#743443

5(A). APPLICATION CONSTRUCTION CODE USAB 31.1.0 19 67
EDITION THRU ADDENDA N/A CODE CASE N/A

5(B). APPLICATION EDITION OF SECTION XI UTILIZED FOR REPAIRS OR REPLACEMENTS: 1980

6(A). NAME OF COMPONENT(S) AND DESCRIPTION (INCLUDE SIZE, CAPACITY, MATERIAL, AND LOCATION AS NEEDED TO AID IN IDENTIFICATION)
UNIT-2, RXBLDG, EL-593'-4" NOZZLE 'D' (AZ120°)

6(B). NAME OF MANUFACTURER TVA
ADDRESS OF MANUFACTURER (IF KNOWN) P.O. BOX 2000 DECATUR AL.

6(c). MANUFACTURER'S SERIAL NUMBER N/A

6(D). NATIONAL BOARD NUMBER (IF APPLICABLE) N/A

6(E). OTHER IDENTIFICATION (SUBASSEMBLY NUMBER, HEAT NUMBER, ETC.) N/A

6(F). YEAR BUILT N/A — CODE CLASS [X] 1 [ ] 2

6(G). REPAIRED [X] — REPLACED [ ] [c] — REPLACEMENT [ ] [d]

6(H). ASME CODE STAMPED YES [ ] NO [X]

7. BRIEF DESCRIPTION OF REPAIR OR REPLACEMENT WORK PERFORMED.
~~GRIND 3:1 TAPER TO REMOVE INDICATION AS PERFORM VISUAL AND PT OF AREA WELD WITH N-VT-3 & N-PT-1~~ REMOVED INDICATION BY GRINDING, MADE WELD BUILDUP TO REPAIR.
MKM 6-25-90

8. TESTS CONDUCTED: HYDROSTATIC [ ] PNEUMATIC [ ]
NOMINAL OPERATING PRESSURE [ ] OTHER [ ]
PRESSURE N/A PSI TEST TEMPERATURE N/A F°

9. REMARKS:

( ) APPLICABLE MANUFACTURERS DATA REPORT [e] TO BE ATTACHED.
RESPONSIBLE ENGR. R.W. Haycock / SYSTEMS ORGANIZATION DATE 06/10/90
ANII * R. Russell DATE 6-20-90

[a] SHEET NOS. FILLED IN BY TESTING AND DIAGNOSTIC PROGRAMS BRANCH.
[b] FOR WORK PERFORMED BY CERTIFICATE HOLDER
[c] REPLACED (LIKE OR EQUIVALENT).
[d] REPLACEMENT (MODIFICATION).
[e] WHEN REQUIRED BY CONSTRUCTION CODE.

RETENTION PERIOD: LIFETIME RESPONSIBLE ORGANIZATION: NM-PROCESSES/SPECIAL PROGRAMS

1064 1567

SHEET 141 of 255

Tennessee Valley Authority
Browns Ferry Nuclear Plant

NOV 10 1986

Form SDSP-26
SDSP-13.3
Page 4 of 5

ASME SECTION XI SUMMARY REPORT

Tennessee Valley Authority
Office of Nuclear Power, 1750 CST2-C
Browns Ferry Nuclear Plant Unit 2
P.O. Box 2000
Decatur, Alabama

Comm. Service Date 3-1-75
System Core Spray
TVA Class II
Workplan/MR No. 744322

Furnish the following for the repair or replacement for the as-left condition of the component (after field work is complete). Mark all blanks (indicate NA for items which do not apply).

National Board Number of repaired or replaced component. N/A

Name of the components and description (include size, capacity, material, and location)—Theses requirements may be satisfied by attaching an applicable drawing.
Replace valve ~~bonnet~~ FLANGE bolts on 2B Core Spray min bypass check valve 2-CKV-75-520B with SA 193 Grade B7 bolting material

Name of Manufacturer UNKNOWN

Address of Manufacturer (if known) N/A

Manufacturer's component identification numbers (i.e., serial number, subassembly number, heat number). If more than one component is replaced, attach weld map and identify items by item number. HT # X569B

Brief description of repair or replacement work performed, including conditions observed and corrective measures taken, as applicable (reference DCR, CAR, etc.; drawing may be attached with attached affected area circled).
Replace ~~bonnet~~ FLANGE bolts MR # 744322

Brief description of post repair or replacement tests and examinations (if required) by instruction or procedure number. Craftsman verify no external leakage with system in service SI 3.3.6 ~~Satisfy this ck. leakcheck was also done~~

ANII/ANI name, employer, and business address R. Russel Hartford

Date work completed 2-18-88

Dale Taylor 2/23/88
Cognizant Engineer Date

Michael R. Marston 6-20-91

Retention Period - Lifetime; Responsibility - Modification Supervisor

TENNESSEE VALLEY AUTHORITY
BROWNS FERRY NUCLEAR PLANT
SITE DIRECTOR STANDARD PRACTICE

SEP 22 1989

FORM PAGE 1 OF 1
FORM SDSP-403
SDSP 13.3

FORM SDSP-403
FORM NIS-2 ATTACHMENT

SHEET 142 of 255

REF CAQR # CHA 890003713

1. (OWNER) TENNESSEE VALLEY AUTHORITY
NUCLEAR POWER

DATE 06/05/90

2. (PLANT) BROWNS FERRY NUCLEAR PLANT
P.O. BOX 2000
DECATUR, ALABAMA

SHEET [a] 1 OF 1

MRA 760540

3. WORK PERFORMED BY: TVA
COMPANY

TYPE CODE SYMBOL STAMP [b] N/A

PO BOX 2000
ADDRESS

AUTHORIZATION NO. [b] N/A

DECATUR ALABAMA
CITY AND STATE

EXPIRATION DATE [b] N/A

4. IDENTIFICATION OF SYSTEM SYSTEM-85, CRD

5(A). APPLICATION CONSTRUCTION CODE USAS B31.1.0 19 67
EDITION THRU ADDENDA N/A CODE CASE N/A

5(B). APPLICATION EDITION OF SECTION XI UTILIZED FOR REPAIRS OR REPLACEMENTS: 1980

6(A). NAME OF COMPONENT(S) AND DESCRIPTION (INCLUDE SIZE, CAPACITY, MATERIAL, AND LOCATION AS NEEDED TO AID IN IDENTIFICATION)
UNIT-2, RXBLDG, EL-565, SCRAM DISCHARGE HEADER, WEST SIDE
HANGER-542

6(B). NAME OF MANUFACTURER UNKNOWN
ADDRESS OF MANUFACTURER (IF KNOWN) UNKNOWN

6(c). MANUFACTURER'S SERIAL NUMBER N/A

6(D). NATIONAL BOARD NUMBER (IF APPLICABLE) N/A

6(E). OTHER IDENTIFICATION (SUBASSEMBLY NUMBER, HEAT NUMBER, ETC.) N/A

6(F). YEAR BUILT N/A CODE CLASS ☐ 1 ☒ 2

6(G). REPAIRED ☒ REPLACED ☐ [c] REPLACEMENT ☐ [d]

6(H). ASME CODE STAMPED YES ☐ NO ☒

7. BRIEF DESCRIPTION OF REPAIR OR REPLACEMENT WORK PERFORMED
REMOVE LINEAR INDICATION IDENTIFIED ON NOI U2/C5-142

8. TESTS CONDUCTED: HYDROSTATIC ☐ PNEUMATIC ☐
NOMINAL OPERATING PRESSURE ☐ OTHER ☐
PRESSURE N/A PSI TEST TEMPERATURE N/A F[e]

9. REMARKS:

( ) APPLICABLE MANUFACTURERS DATA REPORT [e] TO BE ATTACHED.

RW 06/05/90

RESPONSIBLE ENGR. R.W. AYCOCK ~~06/05/90~~ DATE 06/05/90
SYSTEMS
ORGANIZATION

ANII DATE

* REF CAQR# CHA 890003713

[a] SHEET NOS. FILLED IN BY TESTING AND DIAGNOSTIC PROGRAMS BRANCH.
[b] FOR WORK PERFORMED BY CERTIFICATE HOLDER
[c] REPLACED (LIKE OR EQUIVALENT).
[d] REPLACEMENT (MODIFICATION).
[e] WHEN REQUIRED BY CONSTRUCTION CODE.

RETENTION PERIOD: LIFETIME RESPONSIBLE ORGANIZATION: NM-PROCESSES/SPECIAL PROGRAMS

Tennessee Valley Authority
Browns Ferry Nuclear Plant

NOV 10 1986

Form SDSP-26
SDSP-13.3
Page 4 of 5

ASME SECTION XI SUMMARY REPORT

Tennessee Valley Authority
Office of Nuclear Power, 1750 CST2-C
Browns Ferry Nuclear Plant Unit 2
P.O. Box 2000
Decatur, Alabama

Comm. Service Date 3/1/75
System 01
TVA Class C
Workplan (MR) No. A-763586

Furnish the following for the repair or replacement for the as-left condition of the component (after field work is complete). Mark all blanks (indicate NA for items which do not apply).

National Board Number of repaired or replaced component. N/A

Name of the components and description (include size, capacity, material, and location)--Theses requirements may be satisfied by attaching an applicable drawing.
MAINSTEAM RESTRAINT RG-2-4MSR LUG-TO-PIPE ATTACHMENT WELDS. LUG IS A-36 C.S., PIPE IS A-106, GRADE B.

Name of Manufacturer N/A

Address of Manufacturer (if known) N/A

Manufacturer's component identification numbers (i.e., serial number, subassembly number, heat number). If more than one component is replaced, attach weld map and identify items by item number. N/A

Brief description of repair or replacement work performed, including conditions observed and corrective measures taken, as applicable (reference DCR, CAR, etc.; drawing may be attached with attached affected area circled).
LINEAR INDICATIONS EXCAVATED TO REMOVE. UNACCEPTABLE EXCAVATION AREAS WERE WELD REPAIRED.

Brief description of post repair or replacement tests and examinations (if required) by instruction or procedure number.
N-UT-3, N-MT-1

ANII/ANI name, employer, and business address HARTFORD STEAMBOILER INSP. & INS. CO.
1117 PERIMETER CENTER WEST, SUITE E-301
ATLANTA, GA 30338

Date work completed 11/30/87

Cognizant Engineer — Date 11/30/87

Retention: Period - Lifetime; Responsibility - Modifications Supervisor

0031D

Tennessee Valley Authority
Browns Ferry Nuclear Plant

NOV 10 1986

ASME SECTION XI SUMMARY REPORT

Tennessee Valley Authority
Office of Nuclear Power, 1750 CST2-C
Browns Ferry Nuclear Plant Unit 2
P.O. Box 2000
Decatur, Alabama

Comm. Service Date 3-1-75
System 74 RHR
TVA Class D
Workplan/MR No. 766392

Furnish the following for the repair or replacement for the as-left condition of the component (after field work is complete). Mark all blanks (indicate NA for items which do not apply).

National Board Number of repaired or replaced component. NA

Name of the components and description (include size, capacity, material, and location)--Theses requirements may be satisfied by attaching an applicable drawing.
RHR HANGER H-64, STRUCTURAL ATTACHMENT, A-36
RX BLDG, EL. 550

Name of Manufacturer NA

Address of Manufacturer (if known) NA

Manufacturer's component identification numbers (i.e., serial number, subassembly number, heat number). If more than one component is replaced, attach weld map and identify items by item number.
NA

Brief description of repair or replacement work performed, including conditions observed and corrective measures taken, as applicable (reference DCR, CAR, etc.; drawing may be attached with attached affected area circled).
2-RHR-H64 STRUCTURAL ATTACHMENT WELD REPAIRED

Brief description of post repair or replacement tests and examinations (if required) by instruction or procedure number.
N-UT-2, ~~N-PT-1~~ A/S N/A

ANII/ANI name, employer, and business address HARTFORD STEAMBOILER INSP. & INS. CO.
1117 PERIMETER CENTER WEST, SUITE E-301
ATLANTA, GA. 30338

Date work completed 10/6/87

Cognizant Engineer — Date 10/8/87

Retention: Period - Lifetime; Responsibility - Modifications Supervisor

Tennessee Valley Authority
Browns Ferry Nuclear Plant

NOV 10 1986

Form SDSP-26
SDSP-13.3
Page 4 of 5

SHEET 145 of 255

ASME SECTION XI SUMMARY REPORT

Tennessee Valley Authority
Office of Nuclear Power, 1750 CST2-C
Browns Ferry Nuclear Plant Unit 2
P.O. Box 2000
Decatur, Alabama

Comm. Service Date 3/1/75
System #71
TVA Class D
Workplan (MR) No. A-770974

Furnish the following for the repair or replacement for the as-left condition of the component (after field work is complete). Mark all blanks (indicate NA for items which do not apply).

National Board Number of repaired or replaced component. N/A

Name of the components and description (include size, capacity, material, and location)--Theses requirements may be satisfied by attaching an applicable drawing.
RCIC PIPE AT R-1 RESTRAINT, WELD REPAIR AT R-1 LUG PER ATTACHMENT A WELD MAP. A106, GR B 6" SCH 120

Name of Manufacturer NA

Address of Manufacturer (if known) NA

Manufacturer's component identification numbers (i.e., serial number, subassembly number, heat number). If more than one component is replaced, attach weld map and identify items by item number. NA

Brief description of repair or replacement work performed, including conditions observed and corrective measures taken, as applicable (reference DCR, CAR, etc.; drawing may be attached with attached affected area circled).
WELD REPAIR GROOVE AREA PER SDSP 13.1 / GT 12-0-1A

Brief description of post repair or replacement tests and examinations (if required) by instruction or procedure number. N-VT-3, N-PT-1
~~N-VT-1, N-MT-1~~ 8/27/87 N-VT-1, N-MT-1

ANII/ANI name, employer, and business address
HARTFORD STEAM BOILER INSPECTION AND INSURANCE CO.
1117 PERIMETER CENTER WEST, SUITE E-301, ATLANTA, GA. 30338

Date work completed 7/20/87

8/27/87
Cognizant Engineer Date

Retention: Period - Lifetime; Responsibility - Modifications Supervisor

Tennessee Valley Authority
Browns Ferry Nuclear Plant

NOV 10 1986

Form SDSP-26
SDSP-13.3
Page 4 of 5

ASME SECTION XI SUMMARY REPORT

Tennessee Valley Authority
Office of Nuclear Power, 1750 CST2-C
Browns Ferry Nuclear Plant Unit 2
P.O. Box 2000
Decatur, Alabama

Comm. Service Date 3/1/75
System #67 EECW
TVA Class B
Workplan (MR) No. A- ~~739357~~ 770975

Furnish the following for the repair or replacement for the as-left condition of the component (after field work is complete). Mark all blanks (indicate NA for items which do not apply).

National Board Number of repaired or replaced component. NA

Name of the components and description (include size, capacity, material, and location)--Theses requirements may be satisfied by attaching an applicable drawing.
EECW SYSTEM PIPING, 90° ELL, 18" LONG RADIUS, STANDARD WEIGHT ASTM A 234, BUTT WELDING, BLACK

Name of Manufacturer NA

Address of Manufacturer (if known) NA

Manufacturer's component identification numbers (i.e., serial number, subassembly number, heat number). If more than one component is replaced, attach weld map and identify items by item number.
NA

Brief description of repair or replacement work performed, including conditions observed and corrective measures taken, as applicable (reference DCR, CAR, etc.; drawing may be attached with attached affected area circled).
EECW 90° ELL WELD REPAIRED PER SDSP 13.1 AND WELD MAP "ATTACHMENT A".

Brief description of post repair or replacement tests and examinations (if required) by instruction or procedure number.
VISUAL & SURFACE EXAMS (PER N-VT-3 & N-PT-1) PERFORMED PER SDSP 13.1, FORM SDSP-134

ANII/ANI name, employer, and business address
HARTFORD STEAM BOILER INSPECTION AND INSURANCE CO.
1117 PERIMETER CENTER WEST
SUITE E-301 ATLANTA, GA. 30338

Date work completed 7/22/87

8/3/87 | 8/3/87
Cognizant Engineer | Date

Retention: Period - Lifetime; Responsibility - Modifications Supervisor

Tennessee Valley Authority
Browns Ferry Nuclear Plant

Form SDSP-20
SDSP-13.3
Page 4 of 5

ASME SECTION XI SUMMARY REPORT

Tennessee Valley Authority
Office of Nuclear Power, 1750 CST2-C
Browns Ferry Nuclear Plant Unit 2
P.O. Box 2000
Decatur, Alabama

Comm. Service Date 3-1-75
System RHR #74
TVA Class D
Workplan/MR No. ~~779863~~ CNW 7/13/90
770983

Furnish the following for the repair or replacement for the as-left condition of the component (after field work is complete). Mark all blanks (indicate NA for items which do not apply).

National Board Number of repaired or replaced component. NA

Name of the components and description (include size, capacity, material, and location)—Theses requirements may be satisfied by attaching an applicable drawing.
RHR HANGER H-37 STRUCTRAL STEEL, A-36 C.S.

Name of Manufacturer NA

Address of Manufacturer (if known) NA

Manufacturer's component identification numbers (i.e., serial number subassembly number, heat number). If more than one component is replaced, attach weld map and identify items by item number.
SEE WELD MAP, ATTACHMENT "A" SH 1 & 2

Brief description of repair or replacement work performed, including conditions observed and corrective measures taken, as applicable (reference DCR, CAR, etc.; drawing may be attached with attached affected area circled).
GUSSET PLATES REMOVED, EMBED STEEL REPAIRED, AND NEW GUSSET PLATES RE-ATTACHED TO EMBED STEEL

Brief description of post repair or replacement tests and examinations (if required) by instruction or procedure number.
N-UT-2

ANII/ANI name, employer, and business address HARTFORD STEAMBOILER INSP. & INS. CO.
1170 PERIMETER CENTER WEST, SUITE B-301
ATLANTA, GA. 30338

Date work completed 10/15/87

Cognizant Engineer 10/16/87
Date

Retention: Period - Lifetime; Responsibility - Modifications Supervisor

Tennessee Valley Authority
Browns Ferry Nuclear Plant

REV 0002

ASME SECTION XI SUMMARY REPORT

Tennessee Valley Authority
Office of Nuclear Power, 1750 CST2-C
Browns Ferry Nuclear Plant Unit 2
P.O. Box 2000
Decatur, Alabama

Comm. Service Date 3-1-75
System CRD
TVA Class 2
Workplan/MR No. A-772009

Furnish the following for the repair or replacement for the as-left condition of the component (after field work is complete). Mark all blanks (indicate NA for items which do not apply).

National Board Number of repaired or replaced component. NA

Name of the components and description (include size, capacity, material, and location)--Theses requirements may be satisfied by attaching an applicable drawing.

NO COMPONENTS INSTALLED OR REPLACED.

Name of Manufacturer NA

Address of Manufacturer (if known) NA

Manufacturer's component identification numbers (i.e., serial number, subassembly number, heat number). If more than one component is replaced, attach weld map and identify items by item number.

NA

Brief description of repair or replacement work performed, including conditions observed and corrective measures taken, as applicable (reference DCR, CAR, etc.; drawing may be attached with attached affected area circled).

BASE METAL REPAIR PERFORMED ON TS 4x4x1/4" OF CRD SUPPORT H-215. SEE ATTACHED DRAWING FOR LOCATION OF REPAIR.

Brief description of post repair or replacement tests and examinations (if required) by instruction or procedure number. N-VT-2

ANII/ANI name, employer, and business address ROOSEVELT RUSSELL; THE HARTFORD STEAM BOILER INSPECTION + INSURANCE Co.; 1117 PERIMETER CENTER WEST, SUITE E301; ATLANTA, GA 30338

Date work completed 3-12-87

William F. Clover 8-4-88
Cognizant Engineer Date

Retention: Period - Lifetime; Responsibility - Modifications Supervisor

0031p

SECT. XI REPAIR – BASE METAL REPAIR ON TS 4x4x1/4

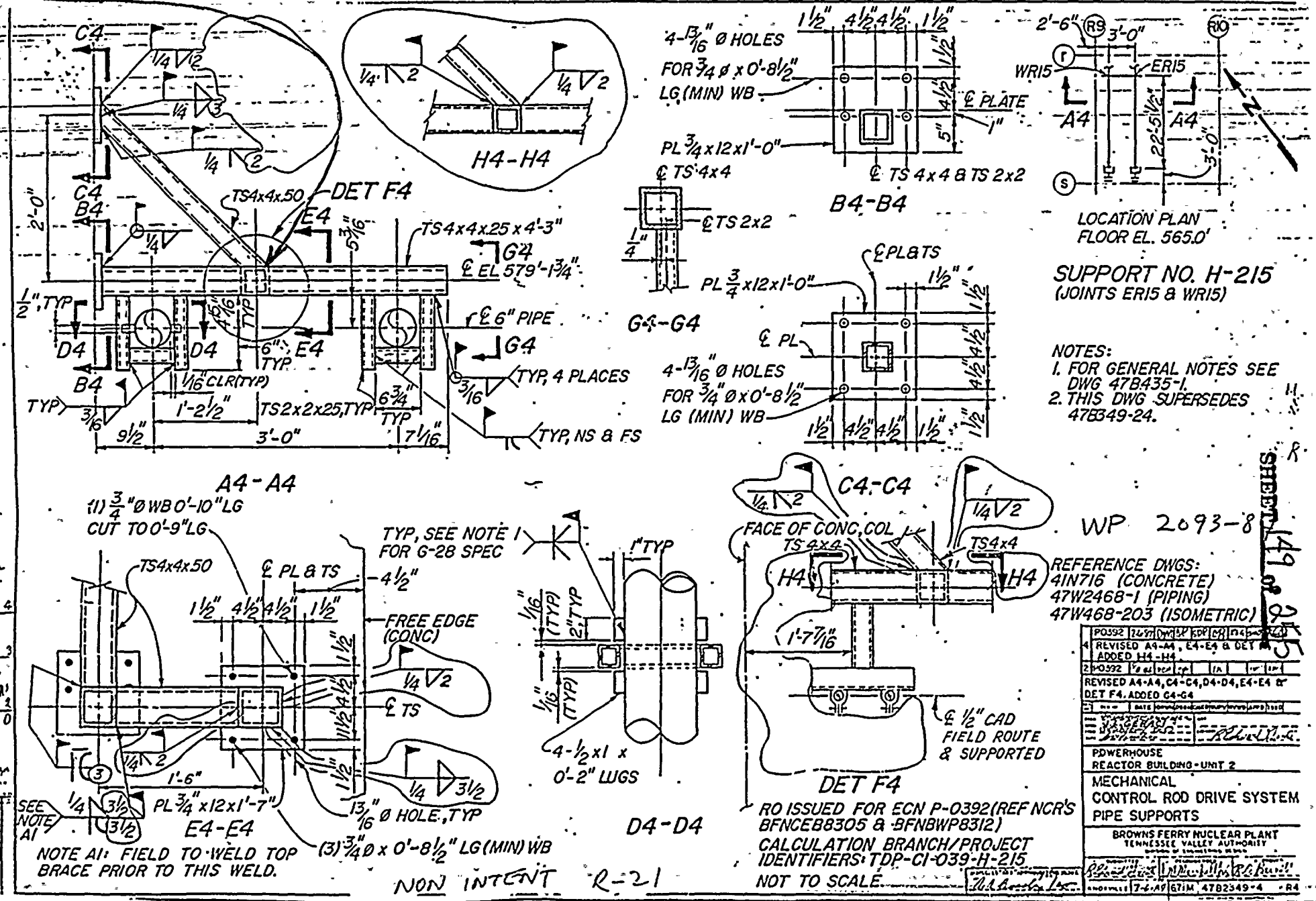

SECT. XI SUMMARY REPORT ATTACHMENT MR# A-772009

Tennessee Valley Authority
Browns Ferry Nuclear Plant

REV 0002

PAGE 30
Form SDSP-26
SDSP-13.3
Page 4 of 5

ASME SECTION XI SUMMARY REPORT

Tennessee Valley Authority
Office of Nuclear Power, 1750 CST2-C
Browns Ferry Nuclear Plant Unit 2
P.O. Box 2000
Decatur, Alabama

Comm. Service Date 3-1-75
System CORE SPRAY
TVA Class D
Workplan/WR No. A-772026

Furnish the following for the repair or replacement for the as-left condition of the component (after field work is complete). Mark all blanks (indicate NA for items which do not apply).

National Board Number of repaired or replaced component. N/A

Name of the components and description (include size, capacity, material, and location)—These requirements may be satisfied by attaching an applicable drawing.
14" CORE SPRAY PUMP DISCHARGE LINE, SCH. .375 (STD. WT.) A-106 GR. B (SEE ATTACHED DWG. 47B458-408R4 FOR SUPPORT R-4 FOR LOCATION.)

Name of Manufacturer N/A

Address of Manufacturer (if known) N/A

Manufacturer's component identification numbers (i.e., serial number, subassembly number, heat number). If more than one component is replaced, attach weld map and identify items by item number.
REPAIR ONLY

Brief description of repair or replacement work performed, including conditions observed and corrective measures taken, as applicable (reference DCR, CAR, etc.; drawing may be attached with attached affected area circled).
BASE METAL REPAIR OF LOW WALL CONDITION AT SUPPORT R-4 LUG REMOVAL AREA ON 14" CORE SPRAY PUMP DISCHARGE LINE.

Brief description of post repair or replacement tests and examinations (if required) by instruction or procedure number. N-PT-1, N-VT-3 AND N-UT-24 PER SI-4.6.G REV. 5

ANII/ANI name, employer, and business address ROOSEVELT RUSSELL JR., ANI
BILL RICE, ANII HARTFORD STEAM BOILER INSPECTION & INSURANCE CO.
1117 PERIMETER CENTER WEST, SUITE E301 ATLANTA, GA.

Date work completed APRIL 3, 1987

[signature] 4/16/87
Cognizant Engineer Date

Retention: Period - Lifetime; Responsibility - Modifications Supervisor

0031e

Tennessee Valley Authority
Browns Ferry Nuclear Plant

NOV 10 1986

Form SDSP-26
SDSP-13.3
Page 4 of 5

ASME SECTION XI SUMMARY REPORT

Tennessee Valley Authority
Office of Nuclear Power, 1750 CST2-C
Browns Ferry Nuclear Plant Unit 2
P.O. Box 2000
Decatur, Alabama

Comm. Service Date 3-1-75
System RHR
TVA Class D
Workplan (MR No.) ~~A-1480~~ A-722137

Furnish the following for the repair or replacement for the as-left condition of the component (after field work is complete). Mark all blanks (indicate NA for items which do not apply).

National Board Number of repaired or replaced component. N/A

Name of the components and description (include size, capacity, material, and location)--Theses requirements may be satisfied by attaching an applicable drawing.
Support 2-RHR-H170A

Name of Manufacturer N/A

Address of Manufacturer (if known) N/A

Manufacturer's component identification numbers (i.e., serial number, subassembly number, heat number). If more than one component is replaced, attach weld map and identify items by item number. Fillac Mat'l Ht# 2G615AF05

Brief description of repair or replacement work performed, including conditions observed and corrective measures taken, as applicable (reference DCR, CAR, etc.; drawing may be attached with attached affected area circled).
Repaired Base Metal defect

Brief description of post repair or replacement tests and examinations (if required) by instruction or procedure number. QC verified repair per SDSP-13.1 / NVT-2

ANII/ANI name, employer, and business address B.J. Rice, ANII/ANI
R. Russell, ANII/ANI
The Hartford Steam Boiler Inspection and Insurance Co.
1117 Perimeter Center West, Suite E301 Atlanta, Georgia 30338

Date work completed 10-5-87

Randy R. Rice 11-12-87
Cognizant Engineer Date

M. R. Marston 10-20-89

Retention: Period - Lifetime; Responsibility - Modifications Supervisor

Tennessee Valley Authority
Browns Ferry Nuclear Plant

NOV 10 1986

Form SDSP-26
SDSP-13.3
Page 4 of 5

ASME SECTION XI SUMMARY REPORT

Tennessee Valley Authority
Office of Nuclear Power, 1750 CST2-C
Browns Ferry Nuclear Plant Unit 2
P.O. Box 2000
Decatur, Alabama

Comm. Service Date 3-1-75
System 67
TVA Class 9
Workplan/MR No. 773265

Furnish the following for the repair or replacement for the as-left condition of the component (after field work is complete). Mark all blanks (indicate NA for items which do not apply).

National Board Number of repaired or replaced component. N/A

Name of the components and description (include size, capacity, material, and location)—Theses requirements may be satisfied by attaching an applicable drawing.
3" STAINLESS STEEL PIPE AND ELBOW NEAR RHR BLD ROOM 6010

Name of Manufacturer Unknown

Address of Manufacturer (if known) Unknown

Manufacturer's component identification numbers (i.e., serial number, subassembly number, heat number). If more than one component is replaced, attach weld map and identify items by item number.
3" PIPE - HT# N21715
3" ELBOW HT# 63218-1

Brief description of repair or replacement work performed, including conditions observed and corrective measures taken, as applicable (reference DCR, CAR, etc.; drawing may be attached with attached affected area circled).
REMOVE WELDS SUSPECTED OF HAVING 2 HING DUE TO MICROBIOLOGICALLY INDUCED CORROSION

Brief description of post repair or replacement tests and examinations (if required) by instruction or procedure number. N-VT-3 (I.+ UP)
N-VT-3, N-DT-1 (FINAL)

ANII/ANI name, employer, and business address ROOSEVELT RUSSELL JR., ANI, BILL RICE, ANII - HARTFORD STEAM BOILER INSPECTION + INSURANCE CO. 1117 PERIMETER CENTER WEST, SUITE E301, ATLANTA, GA.

Date work completed 6-15-87

Joe E. Lasley 6-2-88
Cognizant Engineer Date

M.R. MARSTON 10-20-89

Retention: Period - Lifetime; Responsibility - Modifications Supervisor

09 3 0 0 4 3 6

TENNESSEE VALLEY AUTHORITY
BROWNS FERRY NUCLEAR PLANT
SITE DIRECTOR STANDARD PRACTICE

SEP 22 1989

FORM PAGE 1 OF 1
FORM SDSP-403
SDSP 13.3

SHEET 153 OF 255

FORM SDSP—403
FORM NIS—2 ATTACHMENT

1. (OWNER) TENNESSEE VALLEY AUTHORITY
NUCLEAR POWER
DATE 5-18-90

2. (PLANT) BROWNS FERRY NUCLEAR PLANT
P.O. BOX 2000
DECATUR, ALABAMA
SHEET [a] ____ OF ____
MR# 773871

3. WORK PERFORMED BY: TVA (COMPANY)
TYPE CODE SYMBOL STAMP [b] NA
P.O. Box 2000 (ADDRESS)
AUTHORIZATION NO. [b] NA
Decature, Alabama (CITY AND STATE)
EXPIRATION DATE [b] NA

4. IDENTIFICATION OF SYSTEM SYS 85, Control Rod Drive

5(A). APPLICATION CONSTRUCTION CODE Section III, 19 74
EDITION with ADDENDA 1975 CODE CASE NA

5(B). APPLICATION EDITION OF SECTION XI UTILIZED FOR REPAIRS OR REPLACEMENTS: 1980

6(A). NAME OF COMPONENT(S) AND DESCRIPTION (INCLUDE SIZE, CAPACITY, MATERIAL, AND LOCATION AS NEEDED TO AID IN IDENTIFICATION)
BWR-6 CRD from Hartsville modified by GE for use at BFNP BWR-4

6(B). NAME OF MANUFACTURER GE
ADDRESS OF MANUFACTURER (IF KNOWN) UNKNOWN

6(C). MANUFACTURER'S SERIAL NUMBER A 4419

6(D). NATIONAL BOARD NUMBER (IF APPLICABLE) N/A

6(E). OTHER IDENTIFICATION (SUBASSEMBLY NUMBER, HEAT NUMBER, ETC.)
2-CRD-85-0231 S/N A4419

6(F). YEAR BUILT UNKNOWN CODE CLASS ☒ 1 ☐ 2

6(G). REPAIRED ☐ REPLACED ☒ [c] REPLACEMENT ☐ [d]

6(H). ASME CODE STAMPED YES ☒ NO ☐

7. BRIEF DESCRIPTION OF REPAIR OR REPLACEMENT WORK PERFORMED.
Replaced BWR-4 CRD with modified BWR-6 CRD

8. TESTS CONDUCTED: HYDROSTATIC ☒ PNEUMATIC ☐
NOMINAL OPERATING PRESSURE ☐ OTHER ☐
PRESSURE 1158 PSI TEST TEMPERATURE 182 F°

9. REMARKS: Hydrostatic Test to be conducted during vessel hydro per A-SI-2.3.1.B REF. W.O. 90-08936-00

( ) APPLICABLE MANUFACTURERS DATA REPORT [e] TO BE ATTACHED.
RESPONSIBLE ENGR. M. Martin 7-3-91
Ernest L. Williams / Tech Spt DATE 5/18/90
ORGANIZATION
*
ANII ____ DATE ____

* REF. CARR# CHA 890003713

[a] SHEET NOS. FILLED IN BY TESTING AND DIAGNOSTIC PROGRAMS BRANCH.
[b] FOR WORK PERFORMED BY CERTIFICATE HOLDER
[c] REPLACED (LIKE OR EQUIVALENT).
[d] REPLACEMENT (MODIFICATION).
[e] WHEN REQUIRED BY CONSTRUCTION CODE.

RETENTION PERIOD: LIFETIME RESPONSIBLE ORGANIZATION: NM—PROCESSES/SPECIAL PROGRAMS

TENNESSEE VALLEY AUTHORITY
BROWNS FERRY NUCLEAR PLANT
SITE DIRECTOR STANDARD PRACTICE

SEP 22 1989

FORM SDSP—403
FORM NIS—2 ATTACHMENT

1. (OWNER) TENNESSEE VALLEY AUTHORITY
NUCLEAR POWER

DATE 5-17-90

2. (PLANT) BROWNS FERRY NUCLEAR PLANT
P.O. BOX 2000
DECATUR, ALABAMA

SHEET [a] 154 OF 255

MR# 773872

3. WORK PERFORMED BY: TVA (COMPANY)
P.O. Box 2000 (ADDRESS)
Decature, Alabama (CITY AND STATE)

TYPE CODE SYMBOL STAMP [b] NA
AUTHORIZATION NO. [b] NA
EXPIRATION DATE [b] NA

4. IDENTIFICATION OF SYSTEM SYS 85, Control Rod Drive

5(A). APPLICATION CONSTRUCTION CODE Section III 19 74
EDITION with ADDENDA 1975 CODE CASE NA

5(B). APPLICATION EDITION OF SECTION XI UTILIZED FOR REPAIRS OR REPLACEMENTS: 1980

6(A). NAME OF COMPONENT(S) AND DESCRIPTION (INCLUDE SIZE, CAPACITY, MATERIAL, AND LOCATION AS NEEDED TO AID IN IDENTIFICATION)
BWR-6 CRD from Hartsville modified by GE for use at BFNP BWR-4

6(B). NAME OF MANUFACTURER GE
ADDRESS OF MANUFACTURER (IF KNOWN) UNKNOWN

6(C). MANUFACTURER'S SERIAL NUMBER A5424

6(D). NATIONAL BOARD NUMBER (IF APPLICABLE) N/A

6(E). OTHER IDENTIFICATION (SUBASSEMBLY NUMBER, HEAT NUMBER, ETC.)
2-CRD-85-1415 Serial #. A5424

6(F). YEAR BUILT UNKNOWN CODE CLASS ☒ 1 ☐ 2

6(G). REPAIRED ☐ REPLACED ☒ [c] REPLACEMENT ☐ [d]

6(H). ASME CODE STAMPED YES ☒ NO ☐

7. BRIEF DESCRIPTION OF REPAIR OR REPLACEMENT WORK PERFORMED.
Replaced BWR-4 CRD with modified BWR-6 CRD

8. TESTS CONDUCTED: HYDROSTATIC ☒ PNEUMATIC ☐
NOMINAL OPERATING PRESSURE ☐ OTHER ☐
PRESSURE 1158 PSI TEST TEMPERATURE 182 F°

9. REMARKS: Hydrostatic Test to be conducted during vessel hydro per A-IX-2.2.1.B. REF. W.O. ~~90-07938~~ J90-08936-00
MRN 627-40

( ) APPLICABLE MANUFACTURERS DATA REPORT [e] TO BE ATTACHED.
RESPONSIBLE ENGR. Ernest L. Williams 5-17-90 DATE 5/17/90
ORGANIZATION M. Manta 7-3-91 Tech. Support 5-17-90

ANII _____ DATE _____

* REF. CAQR# CHA 890003713

[a] SHEET NOS. FILLED IN BY TESTING AND DIAGNOSTIC PROGRAMS BRANCH.
[b] FOR WORK PERFORMED BY CERTIFICATE HOLDER
[c] REPLACED (LIKE OR EQUIVALENT).
[d] REPLACEMENT (MODIFICATION).
[e] WHEN REQUIRED BY CONSTRUCTION CODE.

RETENTION PERIOD: LIFETIME RESPONSIBLE ORGANIZATION: NM—PROCESSES/SPECIAL PROGRAMS

3485 0772

TENNESSEE VALLEY AUTHORITY
BROWNS FERRY NUCLEAR PLANT
SITE DIRECTOR STANDARD PRACTICE

SEP 22 1989

FORM PAGE 1 OF 1
FORM SDSP-403
SDSP 13.3

FORM SDSP-403
FORM NIS-2 ATTACHMENT

1. (OWNER) TENNESSEE VALLEY AUTHORITY
NUCLEAR POWER

DATE 5-24-90

2. (PLANT) BROWNS FERRY NUCLEAR PLANT
P.O. BOX 2000
DECATUR, ALABAMA

SHEET [a] 155 OF 255

MR# 773873

3. WORK PERFORMED BY: TVA
COMPANY

TYPE CODE SYMBOL STAMP [b] NA

P.O. Box 2000
ADDRESS

AUTHORIZATION NO. [b] NA

Decature, Alabama
CITY AND STATE

EXPIRATION DATE [b] NA

4. IDENTIFICATION OF SYSTEM SYS 85, Control Rod Drive

5(A). APPLICATION CONSTRUCTION CODE Section III 19 74
EDITION with ADDENDA 1975 CODE CASE NA

5(B). APPLICATION EDITION OF SECTION XI UTILIZED FOR REPAIRS OR REPLACEMENTS: 1980

6(A). NAME OF COMPONENT(S) AND DESCRIPTION (INCLUDE SIZE, CAPACITY, MATERIAL, AND LOCATION AS NEEDED TO AID IN IDENTIFICATION)
BWR-6 CRD from Hartsville modified by GE for use at BFNP BWR-4

6(B). NAME OF MANUFACTURER GE
ADDRESS OF MANUFACTURER (IF KNOWN) UNKNOWN

6(C). MANUFACTURER'S SERIAL NUMBER A-5431

6(D). NATIONAL BOARD NUMBER (IF APPLICABLE) N/A

6(E). OTHER IDENTIFICATION (SUBASSEMBLY NUMBER, HEAT NUMBER, ETC.)
2-CRD-85-2643

6(F). YEAR BUILT UNKNOWN CODE CLASS ☒ 1 ☐ 2

6(G). REPAIRED ☐ REPLACED ☒ [c] REPLACEMENT ☐ [d]

6(H). ASME CODE STAMPED YES ☒ NO ☐

7. BRIEF DESCRIPTION OF REPAIR OR REPLACEMENT WORK PERFORMED.
Replaced BWR-4 CRD with modified BWR-6 CRD

8. TESTS CONDUCTED: HYDROSTATIC ☒ PNEUMATIC ☐
NOMINAL OPERATING PRESSURE ☐ OTHER ☐
PRESSURE 1158 PSI TEST TEMPERATURE 182 F°

9. REMARKS: Hydrostatic Test to be conducted during vessel hydro per R-SI-3.3.1.B. REF. W.O. 90-08936-00 J

( ) APPLICABLE MANUFACTURERS DATA REPORT [e] TO BE ATTACHED. M. Manton 7-3-91
RESPONSIBLE ENGR. Ernest L. Williams / Tech Spt DATE 5/24/90
ORGANIZATION

ANII DATE

* REF. CAQR # CHA 890003713

[a] SHEET NOS. FILLED IN BY TESTING AND DIAGNOSTIC PROGRAMS BRANCH.
[b] FOR WORK PERFORMED BY CERTIFICATE HOLDER
[c] REPLACED (LIKE OR EQUIVALENT).
[d] REPLACEMENT (MODIFICATION).
[e] WHEN REQUIRED BY CONSTRUCTION CODE.

RETENTION PERIOD: LIFETIME RESPONSIBLE ORGANIZATION: NM-PROCESSES/SPECIAL PROGRAMS

TENNESSEE VALLEY AUTHORITY
BROWNS FERRY NUCLEAR PLANT
SITE DIRECTOR STANDARD PRACTICE

SEP 22 1989

FORM SDSP-403
FORM NIS-2 ATTACHMENT

1. (OWNER) TENNESSEE VALLEY AUTHORITY
NUCLEAR POWER — DATE 5-18-90

2. (PLANT) BROWNS FERRY NUCLEAR PLANT
P.O. BOX 2000
DECATUR, ALABAMA — SHEET [a] 156 OF 255

MR# 773874

3. WORK PERFORMED BY: TVA (COMPANY) — TYPE CODE SYMBOL STAMP [b] NA
P.O. Box 2000 (ADDRESS) — AUTHORIZATION NO. [b] NA
Decature, Alabama (CITY AND STATE) — EXPIRATION DATE [b] NA

4. IDENTIFICATION OF SYSTEM SYS 85, Control Rod Drive

5(A). APPLICATION CONSTRUCTION CODE Section III 19 74
EDITION with ADDENDA 1975 CODE CASE NA

5(B). APPLICATION EDITION OF SECTION XI UTILIZED FOR REPAIRS OR REPLACEMENTS: 1980

6(A). NAME OF COMPONENT(S) AND DESCRIPTION (INCLUDE SIZE, CAPACITY, MATERIAL, AND LOCATION AS NEEDED TO AID IN IDENTIFICATION)
BWR-6 CRD from Hartsville modified by GE for use at BFNP BWR-4

6(B). NAME OF MANUFACTURER GE
ADDRESS OF MANUFACTURER (IF KNOWN) UNKNOWN

6(c). MANUFACTURER'S SERIAL NUMBER A4842

6(D). NATIONAL BOARD NUMBER (IF APPLICABLE) N/A

6(E). OTHER IDENTIFICATION (SUBASSEMBLY NUMBER, HEAT NUMBER, ETC.)
X-CRD-85-3454 S/N A4842

6(F). YEAR BUILT UNKNOWN CODE CLASS [X] 1 [ ] 2

6(G). REPAIRED [ ] REPLACED [X] [c] REPLACEMENT [ ] [d]

6(H). ASME CODE STAMPED YES [X] NO [ ]

7. BRIEF DESCRIPTION OF REPAIR OR REPLACEMENT WORK PERFORMED.
Replaced BWR-4 CRD with modified BWR-6 CRD

8. TESTS CONDUCTED: HYDROSTATIC [X] PNEUMATIC [ ]
NOMINAL OPERATING PRESSURE [ ] OTHER [ ]
PRESSURE 1158 PSI TEST TEMPERATURE 182 F°

9. REMARKS: Hydrostatic Test to be conducted during vessel hydro per A-SI-3.3.1.B. REF. W.O. 90-08936-00 J.

( ) APPLICABLE MANUFACTURERS DATA REPORT [e] TO BE ATTACHED. M. Martin 7-3-91
RESPONSIBLE ENGR. Emil J. Williams Tech Staff DATE 5/18/90
ORGANIZATION

ANII _____ DATE _____

* REF. CAQR# CHA890003713

[a] SHEET NOS. FILLED IN BY TESTING AND DIAGNOSTIC PROGRAMS BRANCH.
[b] FOR WORK PERFORMED BY CERTIFICATE HOLDER
[c] REPLACED (LIKE OR EQUIVALENT).
[d] REPLACEMENT (MODIFICATION).
[e] WHEN REQUIRED BY CONSTRUCTION CODE.

RETENTION PERIOD: LIFETIME RESPONSIBLE ORGANIZATION: NM--PROCESSES/SPECIAL PROGRAMS

TENNESSEE VALLEY AUTHORITY
BROWNS FERRY NUCLEAR PLANT
SITE DIRECTOR STANDARD PRACTICE

SEP 22 1989

FORM PAGE 1 OF 1
FORM SDSP-403
SDSP 13.3

FORM SDSP-403
FORM NIS-2 ATTACHMENT

1. (OWNER) TENNESSEE VALLEY AUTHORITY
NUCLEAR POWER

DATE 5-24-90

2. (PLANT) BROWNS FERRY NUCLEAR PLANT
P.O. BOX 2000
DECATUR, ALABAMA

SHEET [a] 157 OF 255

MR# 773876

3. WORK PERFORMED BY: TVA
COMPANY

TYPE CODE SYMBOL STAMP [b] NA

P.O. Box 2000
ADDRESS

AUTHORIZATION NO. [b] NA

Decature, Alabama
CITY AND STATE

EXPIRATION DATE [b] NA

4. IDENTIFICATION OF SYSTEM SYS 85, Control Rod Drive

5(A). APPLICATION CONSTRUCTION CODE Section III 19 74
EDITION with ADDENDA 1975 CODE CASE NA

5(B). APPLICATION EDITION OF SECTION XI UTILIZED FOR REPAIRS OR REPLACEMENTS: 1980

6(A). NAME OF COMPONENT(S) AND DESCRIPTION (INCLUDE SIZE, CAPACITY, MATERIAL, AND LOCATION AS NEEDED TO AID IN IDENTIFICATION)
BWR-6 CRD from Hartsville modified by GE for use at BFNP BWR-4

6(B). NAME OF MANUFACTURER GE
ADDRESS OF MANUFACTURER (IF KNOWN) UNKNOWN

6(C). MANUFACTURER'S SERIAL NUMBER A 2649

6(D). NATIONAL BOARD NUMBER (IF APPLICABLE) N/A

6(E). OTHER IDENTIFICATION (SUBASSEMBLY NUMBER, HEAT NUMBER, ETC.)
2-CRD-85-3815

6(F). YEAR BUILT UNKNOWN CODE CLASS ☒ 1 ☐ 2

6(G). REPAIRED ☐ REPLACED ☒ [c] REPLACEMENT ☐ [d]

6(H). ASME CODE STAMPED YES ☒ NO ☐

7. BRIEF DESCRIPTION OF REPAIR OR REPLACEMENT WORK PERFORMED.
Replaced BWR-4 CRD with modified BWR-6 CRD

8. TESTS CONDUCTED: HYDROSTATIC ☒ PNEUMATIC ☐
NOMINAL OPERATING PRESSURE ☐ OTHER ☐
PRESSURE 1158 PSI TEST TEMPERATURE 182 F°

9. REMARKS: Hydrostatic Test to be conducted during vessel hydro per A-SI-2.2.1.A REF W.O. 90-08936-00J

( ) APPLICABLE MANUFACTURERS DATA REPORT* TO BE ATTACHED. M. Manton 7-3-91
RESPONSIBLE ENGR. Ernest L. Williams Tech. Spt. DATE 5/24/90
ORGANIZATION

ANII DATE

* REF. CAQ R# CHA-890003713

[a] SHEET NOS. FILLED IN BY TESTING AND DIAGNOSTIC PROGRAMS BRANCH.
[b] FOR WORK PERFORMED BY CERTIFICATE HOLDER
[c] REPLACED (LIKE OR EQUIVALENT).
[d] REPLACEMENT (MODIFICATION).
* WHEN REQUIRED BY CONSTRUCTION CODE.

RETENTION PERIOD: LIFETIME RESPONSIBLE ORGANIZATION: NM-PROCESSES/SPECIAL PROGRAMS

TENNESSEE VALLEY AUTHORITY
BROWNS FERRY NUCLEAR PLANT
SITE DIRECTOR STANDARD PRACTICE

SEP 22 1989

FORM SDSP-403
FORM NIS-2 ATTACHMENT

1. (OWNER) TENNESSEE VALLEY AUTHORITY
NUCLEAR POWER — DATE 5-24-90

2. (PLANT) BROWNS FERRY NUCLEAR PLANT
P.O. BOX 2000
DECATUR, ALABAMA — SHEET [a] 158 OF 255

MR# 773877

3. WORK PERFORMED BY: TVA (COMPANY) — TYPE CODE SYMBOL STAMP [b] NA
P.O. Box 2000 (ADDRESS) — AUTHORIZATION NO. [b] NA
Decature, Alabama (CITY AND STATE) — EXPIRATION DATE [b] NA

4. IDENTIFICATION OF SYSTEM SYS 85, Control Rod Drive

5(A). APPLICATION CONSTRUCTION CODE Section III 19 74
EDITION with ADDENDA 1975 CODE CASE NA

5(B). APPLICATION EDITION OF SECTION XI UTILIZED FOR REPAIRS OR REPLACEMENTS: 1980

6(A). NAME OF COMPONENT(S) AND DESCRIPTION (INCLUDE SIZE, CAPACITY, MATERIAL, AND LOCATION AS NEEDED TO AID IN IDENTIFICATION)
BWR-6 CRD from Hartsville modified by GE for use at BFNP BWR-4

6(B). NAME OF MANUFACTURER GE
ADDRESS OF MANUFACTURER (IF KNOWN) UNKNOWN

6(C). MANUFACTURER'S SERIAL NUMBER A5712

6(D). NATIONAL BOARD NUMBER (IF APPLICABLE) N/A

6(E). OTHER IDENTIFICATION (SUBASSEMBLY NUMBER, HEAT NUMBER, ETC.)
2-CRD-85-4347

6(F). YEAR BUILT NA, UNKNOWN CODE CLASS [X] 1 [ ] 2

6(G). REPAIRED [ ] REPLACED [X] [c] REPLACEMENT [ ] [d]

6(H). ASME CODE STAMPED YES [X] NO [ ]

7. BRIEF DESCRIPTION OF REPAIR OR REPLACEMENT WORK PERFORMED.
Replaced BWR-4 CRD with modified BWR-6 CRD

8. TESTS CONDUCTED: HYDROSTATIC [X] PNEUMATIC [ ]
NOMINAL OPERATING PRESSURE [ ] OTHER [ ]
PRESSURE 1158 PSI TEST TEMPERATURE 182 F

9. REMARKS: Hydrostatic Test to be conducted during vessel hydro per A-SI-3.3.1.B. REF. W.O. 90-08936-00J

( ) APPLICABLE MANUFACTURERS DATA REPORT [e] TO BE ATTACHED. M. Martin 7-3-91
RESPONSIBLE ENGR. Ernest L. Williams Tech. Spt. DATE 5/24/90
* ORGANIZATION
ANII _____ DATE _____

* REF. CA QR# CHA 890003713

[a] SHEET NOS. FILLED IN BY TESTING AND DIAGNOSTIC PROGRAMS BRANCH.
[b] FOR WORK PERFORMED BY CERTIFICATE HOLDER
[c] REPLACED (LIKE OR EQUIVALENT).
[d] REPLACEMENT (MODIFICATION).
[e] WHEN REQUIRED BY CONSTRUCTION CODE.

RETENTION PERIOD: LIFETIME RESPONSIBLE ORGANIZATION: NM—PROCESSES/SPECIAL PROGRAMS

TENNESSEE VALLEY AUTHORITY
BROWNS FERRY NUCLEAR PLANT
SITE DIRECTOR STANDARD PRACTICE

SEP 22 1989

FORM SDSP—403
FORM NIS—2 ATTACHMENT

1. (OWNER) TENNESSEE VALLEY AUTHORITY
NUCLEAR POWER

DATE 5-18-90

2. (PLANT) BROWNS FERRY NUCLEAR PLANT
P.O. BOX 2000
DECATUR, ALABAMA

SHEET [a] 159 OF 255

MR# 773878

3. WORK PERFORMED BY: TVA
COMPANY

TYPE CODE SYMBOL STAMP [b] NA

P.O. Box 2000
ADDRESS

AUTHORIZATION NO. [b] NA

Decature, Alabama
CITY AND STATE

EXPIRATION DATE [b] NA

4. IDENTIFICATION OF SYSTEM SYS 85, Control Rod Drive

5(A). APPLICATION CONSTRUCTION CODE Section III 19 74
EDITION with ADDENDA 1975 CODE CASE NA

5(B). APPLICATION EDITION OF SECTION XI UTILIZED FOR REPAIRS OR REPLACEMENTS: 1980

6(A). NAME OF COMPONENT(S) AND DESCRIPTION (INCLUDE SIZE, CAPACITY, MATERIAL, AND LOCATION AS NEEDED TO AID IN IDENTIFICATION)
BWR-6 CRD from Hartsville modified by GE for use at BFNP BWR-4

6(B). NAME OF MANUFACTURER GE
ADDRESS OF MANUFACTURER (IF KNOWN) UNKNOWN

6(C). MANUFACTURER'S SERIAL NUMBER A5111

6(D). NATIONAL BOARD NUMBER (IF APPLICABLE) N/A

6(E). OTHER IDENTIFICATION (SUBASSEMBLY NUMBER, HEAT NUMBER, ETC.)
2-CRD-85-4651 S/N. A5111

6(F). YEAR BUILT NA, UNKNOWN CODE CLASS ☒ 1 ☐ 2

6(G). REPAIRED ☐ REPLACED ☒ [c] REPLACEMENT ☐ [d]

6(H). ASME CODE STAMPED YES ☒ NO ☐

7. BRIEF DESCRIPTION OF REPAIR OR REPLACEMENT WORK PERFORMED.
Replaced BWR-4 CRD with modified BWR-6 CRD

8. TESTS CONDUCTED: HYDROSTATIC ☒ PNEUMATIC ☐
NOMINAL OPERATING PRESSURE ☐ OTHER ☐
PRESSURE 1158 PSI TEST TEMPERATURE 182 F°

9. REMARKS: Hydrostatic Test to be conducted during vessel hydro per A-SI-2.2.1.B. REF. W.O. 90-08936-00

( ) APPLICABLE MANUFACTURERS DATA REPORT [e] TO BE ATTACHED. M. Mayfield 7-3-91
RESPONSIBLE ENGR. Ewell Williams / Tech Spt. DATE 5/18/90
ORGANIZATION

ANII _____ DATE _____

* REF. CAQR# CHA890003713

[a] SHEET NOS. FILLED IN BY TESTING AND DIAGNOSTIC PROGRAMS BRANCH.
[b] FOR WORK PERFORMED BY CERTIFICATE HOLDER
[c] REPLACED (LIKE OR EQUIVALENT).
[d] REPLACEMENT (MODIFICATION).
[e] WHEN REQUIRED BY CONSTRUCTION CODE.

RETENTION PERIOD: LIFETIME RESPONSIBLE ORGANIZATION: NM—PROCESSES/SPECIAL PROGRAMS

TENNESSEE VALLEY AUTHORITY
BROWNS FERRY NUCLEAR PLANT
SITE DIRECTOR STANDARD PRACTICE

SEP 22 1989

FORM PAGE 1 OF 1
FORM SDSP-403
SDSP 13.3

FORM SDSP-403
FORM NIS-2 ATTACHMENT

1. (OWNER) TENNESSEE VALLEY AUTHORITY
NUCLEAR POWER

DATE ~~6-5-7~~ MRM 6-27-90 5-18-90

2. (PLANT) BROWNS FERRY NUCLEAR PLANT
P.O. BOX 2000
DECATUR, ALABAMA

SHEET [a] 160 OF 255

MR# 773879

3. WORK PERFORMED BY: TVA (COMPANY)
P.O. Box 2000 (ADDRESS)
Decature, Alabama (CITY AND STATE)

TYPE CODE SYMBOL STAMP [b] NA
AUTHORIZATION NO. [b] NA
EXPIRATION DATE [b] NA

4. IDENTIFICATION OF SYSTEM SYS 85, Control Rod Drive

5(A). APPLICATION CONSTRUCTION CODE Section III 19 74
EDITION with ADDENDA 1975 CODE CASE NA

5(B). APPLICATION EDITION OF SECTION XI UTILIZED FOR REPAIRS OR REPLACEMENTS: 1980

6(A). NAME OF COMPONENT(S) AND DESCRIPTION (INCLUDE SIZE, CAPACITY, MATERIAL, AND LOCATION AS NEEDED TO AID IN IDENTIFICATION)
BWR-6 CRD from Hartsville modified by GE for use at BFNP BWR-4

6(B). NAME OF MANUFACTURER GE
ADDRESS OF MANUFACTURER (IF KNOWN) UNKNOWN

6(c). MANUFACTURER'S SERIAL NUMBER A5528

6(D). NATIONAL BOARD NUMBER (IF APPLICABLE) N/A

6(E). OTHER IDENTIFICATION (SUBASSEMBLY NUMBER, HEAT NUMBER, ETC.)
A-CRD-85-5031 S/N A5528

6(F). YEAR BUILT NA, UNKNOWN CODE CLASS [X] 1 [ ] 2

6(G). REPAIRED [ ] REPLACED [X] [c] REPLACEMENT [ ] [d]

6(H). ASME CODE STAMPED YES [X] NO [ ]

7. BRIEF DESCRIPTION OF REPAIR OR REPLACEMENT WORK PERFORMED.
Replaced BWR-4 CRD with modified BWR-6 CRD

8. TESTS CONDUCTED: HYDROSTATIC [X] PNEUMATIC [ ]
NOMINAL OPERATING PRESSURE [ ] OTHER [ ]
PRESSURE 1158 PSI TEST TEMPERATURE 182 F

9. REMARKS: Hydrostatic Test to be conducted during vessel hydro per A-SI-2.2.1.B. REF. W.O. 90-08936-00

( ) APPLICABLE MANUFACTURERS DATA REPORT [e] TO BE ATTACHED. M. Mantz 7-3-91
RESPONSIBLE ENGR. Ernest L. Williams/Tech Spt DATE 5/18/90
ORGANIZATION

ANII _____ DATE _____

REF CAQR# CHA 890003713

[a] SHEET NOS. FILLED IN BY TESTING AND DIAGNOSTIC PROGRAMS BRANCH.
[b] FOR WORK PERFORMED BY CERTIFICATE HOLDER
[c] REPLACED (LIKE OR EQUIVALENT).
[d] REPLACEMENT (MODIFICATION).
[e] WHEN REQUIRED BY CONSTRUCTION CODE.

RETENTION PERIOD: LIFETIME RESPONSIBLE ORGANIZATION: KM-PROCESSES/SPECIAL PROGRAMS

TENNESSEE VALLEY AUTHORITY
BROWNS FERRY NUCLEAR PLANT
SITE DIRECTOR STANDARD PRACTICE

SEP 22 1989

FORM PAGE 1 OF 1
FORM SDSP-403
SDSP 13.3

FORM SDSP-403
FORM NIS-2 ATTACHMENT

1. (OWNER) TENNESSEE VALLEY AUTHORITY
NUCLEAR POWER

DATE 5-18-90

2. (PLANT) BROWNS FERRY NUCLEAR PLANT
P.O. BOX 2000
DECATUR, ALABAMA

SHEET [a] 161 OF 255

MRH 773881

3. WORK PERFORMED BY: TVA
COMPANY

TYPE CODE SYMBOL STAMP [b] NA

P.O. Box 2000
ADDRESS

AUTHORIZATION NO. [b] NA

Decature, Alabama
CITY AND STATE

EXPIRATION DATE [b] NA

4. IDENTIFICATION OF SYSTEM SYS 85, Control Rod Drive

5(A). APPLICATION CONSTRUCTION CODE Section III 19 74
EDITION with ADDENDA 1975 CODE CASE

5(B). APPLICATION EDITION OF SECTION XI UTILIZED FOR REPAIRS OR REPLACEMENTS: 1980

6(A). NAME OF COMPONENT(S) AND DESCRIPTION (INCLUDE SIZE, CAPACITY, MATERIAL, AND LOCATION AS NEEDED TO AID IN IDENTIFICATION)
BWR-6 CRD from Hartsville modified by GE for use at BFNP BWR-4

6(B). NAME OF MANUFACTURER GE
ADDRESS OF MANUFACTURER (IF KNOWN) UNKNOWN

6(c). MANUFACTURER'S SERIAL NUMBER 5268

6(D). NATIONAL BOARD NUMBER (IF APPLICABLE) N/A

6(E). OTHER IDENTIFICATION (SUBASSEMBLY NUMBER, HEAT NUMBER, ETC.)
2-CRD-85-5051 S/N 5268

6(F). YEAR BUILT NA, UNKNOWN CODE CLASS ☒ 1 ☐ 2

6(G). REPAIRED ☐ REPLACED ☒ [c] REPLACEMENT ☐ [d]

6(H). ASME CODE STAMPED YES ☒ NO ☐

7. BRIEF DESCRIPTION OF REPAIR OR REPLACEMENT WORK PERFORMED.
Replaced BWR-4 CRD with modified BWR-6 CRD.

8. TESTS CONDUCTED: HYDROSTATIC ☒ PNEUMATIC ☐
NOMINAL OPERATING PRESSURE ☐ OTHER ☐
PRESSURE 1158 PSI TEST TEMPERATURE 182 F°

9. REMARKS: Hydrostatic Test to be conducted during vessel hydro per 2-SI-2.2.1.B. REF. W.O. 90-08936-00

( ) APPLICABLE MANUFACTURERS DATA REPORT [e] TO BE ATTACHED.
RESPONSIBLE ENGR. * Everett J. Williams/Test Spt. DATE 5/18/90 M. Mantor 7-3-91
ORGANIZATION.

ANII DATE

* REF. CAQR# CHA890003713

[a] SHEET NOS. FILLED IN BY TESTING AND DIAGNOSTIC PROGRAMS BRANCH.
[b] FOR WORK PERFORMED BY CERTIFICATE HOLDER
[c] REPLACED (LIKE OR EQUIVALENT).
[d] REPLACEMENT (MODIFICATION).
[e] WHEN REQUIRED BY CONSTRUCTION CODE.

RETENTION PERIOD: LIFETIME RESPONSIBLE ORGANIZATION: NM-PROCESSES/SPECIAL PROGRAMS

TENNESSEE VALLEY AUTHORITY
BROWNS FERRY NUCLEAR PLANT
SITE DIRECTOR STANDARD PRACTICE

SEP 22 1989

FORM PAGE 1 OF 1
FORM SDSP-403
SDSP 13.3

FORM SDSP-403
FORM NIS-2 ATTACHMENT

1. (OWNER) TENNESSEE VALLEY AUTHORITY
NUCLEAR POWER

DATE 5-18-90

2. (PLANT) BROWNS FERRY NUCLEAR PLANT
P.O. BOX 2000
DECATUR, ALABAMA

SHEET [a] 162 OF 255

MR# 773882

3. WORK PERFORMED BY: TVA
COMPANY

TYPE CODE SYMBOL STAMP [b] NA

P.O. Box 2000
ADDRESS

AUTHORIZATION NO. [b] NA

Decatur, Alabama
CITY AND STATE

EXPIRATION DATE [b] NA

4. IDENTIFICATION OF SYSTEM SYS 85, Control Rod Drive

5(A). APPLICATION CONSTRUCTION CODE Section III 19 74
EDITION with ADDENDA 1975 CODE CASE NA

5(B). APPLICATION EDITION OF SECTION XI UTILIZED FOR REPAIRS OR REPLACEMENTS: 1980

6(A). NAME OF COMPONENT(S) AND DESCRIPTION (INCLUDE SIZE, CAPACITY, MATERIAL, AND LOCATION AS NEEDED TO AID IN IDENTIFICATION)
BWR-6 CRD from Hartsville modified by GE for use at BFNP BWR-4

6(B). NAME OF MANUFACTURER GE
ADDRESS OF MANUFACTURER (IF KNOWN) UNKNOWN

6(c). MANUFACTURER'S SERIAL NUMBER A5629

6(D). NATIONAL BOARD NUMBER (IF APPLICABLE) N/A

6(E). OTHER IDENTIFICATION (SUBASSEMBLY NUMBER, HEAT NUMBER, ETC.)
2-CRD-85-5829 Serial # A5629

6(F). YEAR BUILT NA, UNKNOWN CODE CLASS ☒ 1 ☐ 2

6(G). REPAIRED ☐ REPLACED ☒ [a] REPLACEMENT ☐ [d]

6(H). ASME CODE STAMPED YES ☒ NO ☐

7. BRIEF DESCRIPTION OF REPAIR OR REPLACEMENT WORK PERFORMED.
Replaced BWR-4 CRD with modified BWR-6 CRD

8. TESTS CONDUCTED: HYDROSTATIC ☒ PNEUMATIC ☐
NOMINAL OPERATING PRESSURE ☐ OTHER ☐
PRESSURE 1158 PSI TEST TEMPERATURE 182 F°

9. REMARKS: Hydrostatic Test to be conducted during vessel hydro per A-SI-2.2.1.B, REF. W.O. 90-08936-00J

( ) APPLICABLE MANUFACTURERS DATA REPORTS [e] TO BE ATTACHED.

RESPONSIBLE ENGR. * DATE 5/18/90 J.M. Martin 7-3-91
ORGANIZATION

ANII DATE

* REF CAQR# CHA890003713

[a] SHEET NOS. FILLED IN BY TESTING AND DIAGNOSTIC PROGRAMS BRANCH.
[b] FOR WORK PERFORMED BY CERTIFICATE HOLDER
[c] REPLACED (LIKE OR EQUIVALENT).
[d] REPLACEMENT (MODIFICATION).
[e] WHEN REQUIRED BY CONSTRUCTION CODE.

RETENTION PERIOD: LIFETIME RESPONSIBLE ORGANIZATION: M-PROCESSES/SPECIAL PROGRAMS

TENNESSEE VALLEY AUTHORITY
BROWNS FERRY NUCLEAR PLANT
SITE DIRECTOR STANDARD PRACTICE

SEP 22 1989

FORM PAGE 1 OF 1
FORM SDSP-403
SDSP 13.3

FORM SDSP-403
FORM NIS-2 ATTACHMENT

1. (OWNER) TENNESSEE VALLEY AUTHORITY
NUCLEAR POWER

DATE 5-18-90

2. (PLANT) BROWNS FERRY NUCLEAR PLANT
P.O. BOX 2000
DECATUR, ALABAMA

SHEET [a] 163 OF 255

MR# 773883

3. WORK PERFORMED BY: TVA
COMPANY

TYPE CODE SYMBOL STAMP [b] NA

P.O. Box 2000
ADDRESS

AUTHORIZATION NO. [b] NA

Decature, Alabama
CITY AND STATE

EXPIRATION DATE [b] NA

4. IDENTIFICATION OF SYSTEM SYS 85, Control Rod Drive

5(A). APPLICATION CONSTRUCTION CODE Section III 19 74
EDITION with ADDENDA 1975 CODE CASE NA

5(B). APPLICATION EDITION OF SECTION XI UTILIZED FOR REPAIRS OR REPLACEMENTS: 1980

6(A). NAME OF COMPONENT(S) AND DESCRIPTION (INCLUDE SIZE, CAPACITY, MATERIAL, AND LOCATION AS NEEDED TO AID IN IDENTIFICATION)
BWR-6 CRD from Hartsville modified by GE for use at BFN's BWR-4

6(B). NAME OF MANUFACTURER GE
ADDRESS OF MANUFACTURER (IF KNOWN) UNKNOWN

6(C). MANUFACTURER'S SERIAL NUMBER A 4091

6(D). NATIONAL BOARD NUMBER (IF APPLICABLE) N/A

6(E). OTHER IDENTIFICATION (SUBASSEMBLY NUMBER, HEAT NUMBER, ETC.)
2-CRD-85-0237 Serial # A 4091

6(F). YEAR BUILT NA, UNKNOWN CODE CLASS ☒ 1 ☐ 2

6(G). REPAIRED ☐ REPLACED ☒ [c] REPLACEMENT ☐ [d]

6(H). ASME CODE STAMPED YES ☒ NO ☐

7. BRIEF DESCRIPTION OF REPAIR OR REPLACEMENT WORK PERFORMED.
Replaced BWR-4 CRD with modified BWR-6 CRD

8. TESTS CONDUCTED: HYDROSTATIC ☒ PNEUMATIC ☐
NOMINAL OPERATING PRESSURE ☐ OTHER ☐
PRESSURE 1158 PSI TEST TEMPERATURE 182 F°

9. REMARKS: Hydrostatic Test to be conducted during vessel hydro per 2-SI-3.3.1.A. REF. W.O. 90-08936-00

( ) APPLICABLE MANUFACTURERS DATA REPORT [e] TO BE ATTACHED. M. Martin 7-3-91
RESPONSIBLE ENGR. Ernest J. Wilburne/Tech Spt. DATE 5/12/90
ORGANIZATION *

ANII DATE

* REF. CAQR# CHA 890003713

[a] SHEET NOS. FILLED IN BY TESTING AND DIAGNOSTIC PROGRAMS BRANCH.
[b] FOR WORK PERFORMED BY CERTIFICATE HOLDER
[c] REPLACED (LIKE OR EQUIVALENT).
[d] REPLACEMENT (MODIFICATION).
[e] WHEN REQUIRED BY CONSTRUCTION CODE.

RETENTION PERIOD: LIFETIME RESPONSIBLE ORGANIZATION: DM—PROCESSES/SPECIAL PROGRAMS

TENNESSEE VALLEY AUTHORITY
BROWNS FERRY NUCLEAR PLANT
SITE DIRECTOR STANDARD PRACTICE

SEP 22 1999

FORM SDSP-403
FORM NIS-2 ATTACHMENT

1. (OWNER) TENNESSEE VALLEY AUTHORITY
NUCLEAR POWER
DATE 5-22-90

2. (PLANT) BROWNS FERRY NUCLEAR PLANT
P.O. BOX 2000
DECATUR, ALABAMA
SHEET [a] 164 OF 255

MRA 773884

3. WORK PERFORMED BY: TVA (COMPANY)
TYPE CODE SYMBOL STAMP [b] NA
P.O. Box 2000 (ADDRESS)
AUTHORIZATION NO.[b] NA
Decature, Alabama (CITY AND STATE)
EXPIRATION DATE [b] NA

4. IDENTIFICATION OF SYSTEM SYS 85, Control Rod Drive

5(A). APPLICATION CONSTRUCTION CODE Section III 19 74
EDITION with ADDENDA 1975 CODE CASE NA

5(B). APPLICATION EDITION OF SECTION XI UTILIZED FOR REPAIRS OR REPLACEMENTS: 1980

6(A). NAME OF COMPONENT(S) AND DESCRIPTION (INCLUDE SIZE, CAPACITY, MATERIAL, AND LOCATION AS NEEDED TO AID IN IDENTIFICATION)
BWR-6 CRD from Hartsville modified by GE for use at BFNP BWR-4

6(B). NAME OF MANUFACTURER GE
ADDRESS OF MANUFACTURER (IF KNOWN) UNKNOWN

6(C). MANUFACTURER'S SERIAL NUMBER A4692

6(D). NATIONAL BOARD NUMBER (IF APPLICABLE) N/A

6(E). OTHER IDENTIFICATION (SUBASSEMBLY NUMBER, HEAT NUMBER, ETC.)
2-CRD-85-0235

6(F). YEAR BUILT NA, UNKNOWN CODE CLASS ☒ 1 ☐ 2

6(G). REPAIRED ☐ REPLACED ☒ [c] REPLACEMENT ☐ [d]

6(H). ASME CODE STAMPED YES ☒ NO ☐

7. BRIEF DESCRIPTION OF REPAIR OR REPLACEMENT WORK PERFORMED.
Replaced BWR-4 CRD with modified BWR-6 CRD

8. TESTS CONDUCTED: HYDROSTATIC ☒ PNEUMATIC ☐
NOMINAL OPERATING PRESSURE ☐ OTHER ☐
PRESSURE 1158 PSI TEST TEMPERATURE 182 F°

9. REMARKS: Hydrostatic Test - to be conducted during vessel hydro per A-SI-2.2.1.A, REF. W.O. 90-08936-00

( ) APPLICABLE MANUFACTURER'S DATA REPORTS TO BE ATTACHED.
RESPONSIBLE ENGR. Ernest L. Williams Tech Spec DATE 12/22/90 M. Martin 7-3-91
ORGANIZATION
ANII DATE

* REF CAQR# CAA890003713

[a] SHEET NOS. FILLED IN BY TESTING AND DIAGNOSTIC PROGRAMS BRANCH.
[b] FOR WORK PERFORMED BY CERTIFICATE HOLDER
[c] REPLACED (LIKE OR EQUIVALENT).
[d] REPLACEMENT (MODIFICATION).
[e] WHEN REQUIRED BY CONSTRUCTION CODE.

RETENTION PERIOD: LIFETIME RESPONSIBLE ORGANIZATION: NM-PROCESSES/SPECIAL PROGRAMS

TENNESSEE VALLEY AUTHORITY
BROWNS FERRY NUCLEAR PLANT
SITE DIRECTOR STANDARD PRACTICE

SEP 22 1989

FORM PAGE 1 OF 1
FORM SDSP-403
SDSP 13.3

FORM SDSP-403
FORM NIS-2 ATTACHMENT

1. (OWNER) TENNESSEE VALLEY AUTHORITY
NUCLEAR POWER

DATE 5-18-90

2. (PLANT) BROWNS FERRY NUCLEAR PLANT
P.O. BOX 2000
DECATUR, ALABAMA

SHEET [a] 165 OF 255

MR# 773885

3. WORK PERFORMED BY: TVA
COMPANY

P.O. Box 2000
ADDRESS

Decature, Alabama
CITY AND STATE

TYPE CODE SYMBOL STAMP [b] NA

AUTHORIZATION NO. [b] NA

EXPIRATION DATE [b] NA

4. IDENTIFICATION OF SYSTEM SYS 85, Control Rod Drive

5(A). APPLICATION CONSTRUCTION CODE Section III 19 74
EDITION with ADDENDA 1975 CODE CASE NA

5(B). APPLICATION EDITION OF SECTION XI UTILIZED FOR REPAIRS OR REPLACEMENTS: 1980

6(A). NAME OF COMPONENT(S) AND DESCRIPTION (INCLUDE SIZE, CAPACITY, MATERIAL, AND LOCATION AS NEEDED TO AID IN IDENTIFICATION)
BWR-6 CRD from Hartsville, modified by GE for use at BFNP BWR-4

6(B). NAME OF MANUFACTURER GE
ADDRESS OF MANUFACTURER (IF KNOWN) UNKNOWN

6(c). MANUFACTURER'S SERIAL NUMBER A5279

6(D). NATIONAL BOARD NUMBER (IF APPLICABLE) N/A

6(E). OTHER IDENTIFICATION (SUBASSEMBLY NUMBER, HEAT NUMBER, ETC.)
2-CRD-85-0243 C/N - A5279

6(F). YEAR BUILT NA, UNKNOWN CODE CLASS ☒ 1 ☐ 2

6(G). REPAIRED ☐ REPLACED ☒ [c] REPLACEMENT ☐ [d]

6(H). ASME CODE STAMPED YES ☒ NO ☐

7. BRIEF DESCRIPTION OF REPAIR OR REPLACEMENT WORK PERFORMED.
Replaced BWR-4 CRD with modified BWR-6 CRD

8. TESTS CONDUCTED: HYDROSTATIC ☒ PNEUMATIC ☐
NOMINAL OPERATING PRESSURE ☐ OTHER ☐
PRESSURE 1158 PSI TEST TEMPERATURE 182 F°

9. REMARKS: Hydrostatic Test to be conducted during vessel hydro per 2-SI-3.3.1.B, REF. W.O. 90-08936-00

( ) APPLICABLE MANUFACTURERS DATA REPORT [e] TO BE ATTACHED. M. Martin 7-3-91
RESPONSIBLE ENGR. Ernest A. Williams Tech Spec DATE 5/28/90
ORGANIZATION *

ANII _____ DATE _____

* REF. CAQR # CHA 890037 13.

[a] SHEET NOS. FILLED IN BY TESTING AND DIAGNOSTIC PROGRAMS BRANCH.
[b] FOR WORK PERFORMED BY CERTIFICATE HOLDER
[c] REPLACED (LIKE OR EQUIVALENT).
[d] REPLACEMENT (MODIFICATION).
[e] WHEN REQUIRED BY CONSTRUCTION CODE.

RETENTION PERIOD: LIFETIME RESPONSIBLE ORGANIZATION: NM-PROCESSES/SPECIAL PROGRAMS

TENNESSEE VALLEY AUTHORITY
BROWNS FERRY NUCLEAR PLANT
SITE DIRECTOR STANDARD PRACTICE

SEP 22 1989

FORM PAGE 1 OF 1
FORM SDSP-403
SDSP 13.3

FORM SDSP-403
FORM NIS-2 ATTACHMENT

1. (OWNER) TENNESSEE VALLEY AUTHORITY
NUCLEAR POWER
DATE 5-18-90

2. (PLANT) BROWNS FERRY NUCLEAR PLANT
P.O. BOX 2000.
DECATUR, ALABAMA
SHEET [a] 166 OF 255

MR# 773886

3. WORK PERFORMED BY: TVA
COMPANY
TYPE CODE SYMBOL STAMP [b] NA
P.O. Box 2000
ADDRESS
AUTHORIZATION NO. [b] NA
Decature, Alabama
CITY AND STATE
EXPIRATION DATE [b] NA

4. IDENTIFICATION OF SYSTEM SYS 85, Control Rod Drive

5(A). APPLICATION CONSTRUCTION CODE Section III 19 74
EDITION with ADDENDA 1975 CODE CASE NA

5(B). APPLICATION EDITION OF SECTION XI UTILIZED FOR REPAIRS OR REPLACEMENTS: 1980

6(A). NAME OF COMPONENT(S) AND DESCRIPTION (INCLUDE SIZE, CAPACITY, MATERIAL, AND LOCATION AS NEEDED TO AID IN IDENTIFICATION)
BWR-6 CRD from Hartsville modified by GE for use w/ BFNP BWR-4

6(B). NAME OF MANUFACTURER GE
ADDRESS OF MANUFACTURER (IF KNOWN) UNKNOWN

6(c). MANUFACTURER'S SERIAL NUMBER A4307

6(D). NATIONAL BOARD NUMBER (IF APPLICABLE) N/A

6(E). OTHER IDENTIFICATION (SUBASSEMBLY NUMBER, HEAT NUMBER, ETC.)
2-CRD-85-773886 Serial # A4307

6(F). YEAR BUILT NA, UNKNOWN CODE CLASS ☒ 1 ☐ 2

6(G). REPAIRED ☐ REPLACED ☒ [c] REPLACEMENT ☐ [d]

6(H). ASME CODE STAMPED YES ☒ NO ☐

7. BRIEF DESCRIPTION OF REPAIR OR REPLACEMENT WORK PERFORMED.
Replaced BWR-4 CRD with modified BWR-6 CRD

8. TESTS CONDUCTED: HYDROSTATIC ☒ PNEUMATIC ☐
NOMINAL OPERATING PRESSURE ☐ OTHER ☐
PRESSURE 1158 PSI TEST TEMPERATURE 182 F°

9. REMARKS: Hydrostatic Test to be conducted during vessel hydro per 2-SI-3.3.1.B, REF W.O. 90-08936-00J

( ) APPLICABLE MANUFACTURERS DATA REPORT [e] TO BE ATTACHED.
RESPONSIBLE ENGR. M. Martin 7-3-91 / Ewell L. Williams / Tech Spt. DATE 5/18/90
ORGANIZATION
ANII DATE

* REF CAQR # CHA890003713

[a] SHEET NOS. FILLED IN BY TESTING AND DIAGNOSTIC PROGRAMS BRANCH.
[b] FOR WORK PERFORMED BY CERTIFICATE HOLDER
[c] REPLACED (LIKE OR EQUIVALENT).
[d] REPLACEMENT (MODIFICATION).
[e] WHEN REQUIRED BY CONSTRUCTION CODE.

RETENTION PERIOD: LIFETIME RESPONSIBLE ORGANIZATION: NM-PROCESSES/SPECIAL PROGRAMS

TENNESSEE VALLEY AUTHORITY
BROWNS FERRY NUCLEAR PLANT
SITE DIRECTOR STANDARD PRACTICE

SEP 22 1989

FORM SDSP-403
FORM NIS-2 ATTACHMENT

1. (OWNER) TENNESSEE VALLEY AUTHORITY
NUCLEAR POWER
DATE 5-17-90

2. (PLANT) BROWNS FERRY NUCLEAR PLANT
P.O. BOX 2000
DECATUR, ALABAMA
SHEET [a] 167 OF 255
MR# 773887

3. WORK PERFORMED BY: TVA (COMPANY)
TYPE CODE SYMBOL STAMP [b] NA
P.O. Box 2000 (ADDRESS)
AUTHORIZATION NO. [b] NA
Decature, Alabama (CITY AND STATE)
EXPIRATION DATE [b] NA

4. IDENTIFICATION OF SYSTEM SYS 85, Control Rod Drive

5(A). APPLICATION CONSTRUCTION CODE Section III 19 74
EDITION with ADDENDA 1975 CODE CASE NA

5(B). APPLICATION EDITION OF SECTION XI UTILIZED FOR REPAIRS OR REPLACEMENTS: 1980

6(A). NAME OF COMPONENT(S) AND DESCRIPTION (INCLUDE SIZE, CAPACITY, MATERIAL, AND LOCATION AS NEEDED TO AID IN IDENTIFICATION)
BWR-6 CRD from Hartsville modified by GE for use at BFNP BWR-4 S/N A5073.

6(B). NAME OF MANUFACTURER GE
ADDRESS OF MANUFACTURER (IF KNOWN) UNKNOWN

6(c). MANUFACTURER'S SERIAL NUMBER A 5073

6(D). NATIONAL BOARD NUMBER (IF APPLICABLE) N/A

6(E). OTHER IDENTIFICATION (SUBASSEMBLY NUMBER, HEAT NUMBER, ETC.)
2-CRD-85-0623 S/N A5073

6(F). YEAR BUILT UNKNOWN CODE CLASS ☒ 1 ☐ 2

6(G). REPAIRED ☐ REPLACED ☒ [c] REPLACEMENT ☐ [d]

6(H). ASME CODE STAMPED YES ☒ NO ☐

7. BRIEF DESCRIPTION OF REPAIR OR REPLACEMENT WORK PERFORMED.
Replaced BWR-4 CRD with modified BWR-6 CRD

8. TESTS CONDUCTED: HYDROSTATIC ☒ PNEUMATIC ☐
NOMINAL OPERATING PRESSURE ☐ OTHER ☐
PRESSURE 1158 PSI TEST TEMPERATURE 182 F°

9. REMARKS: Hydrostatic Test to be conducted during vessel hydro per 2-SI-3.3.1.B, REF. W.O. 90-08936-00

( ) APPLICABLE MANUFACTURERS DATA REPORT [e] TO BE ATTACHED. M. Mantin 7-3-91
RESPONSIBLE ENGR. Emil J. Williams/Tech Spec DATE 5/17/90
ORGANIZATION *
ANII DATE

* REF. CAQR # CHA 890003713

[a] SHEET NOS. FILLED IN BY TESTING AND DIAGNOSTIC PROGRAMS BRANCH.
[b] FOR WORK PERFORMED BY CERTIFICATE HOLDER
[c] REPLACED (LIKE OR EQUIVALENT).
[d] REPLACEMENT (MODIFICATION).
[e] WHEN REQUIRED BY CONSTRUCTION CODE.

RETENTION PERIOD: LIFETIME RESPONSIBLE ORGANIZATION: NM-PROCESSES/SPECIAL PROGRAMS

TENNESSEE VALLEY AUTHORITY
BROWNS FERRY NUCLEAR PLANT
SITE DIRECTOR STANDARD PRACTICE

SEP 22 1989

FORM PAGE 1 OF 1
FORM SDSP-403
SDSP 13.3

FORM SDSP-403
FORM NIS-2 ATTACHMENT

1. (OWNER) TENNESSEE VALLEY AUTHORITY
NUCLEAR POWER
DATE 5-22-90

2. (PLANT) BROWNS FERRY NUCLEAR PLANT
P.O. BOX 2000
DECATUR, ALABAMA
SHEET [a] 168 OF 255

MR# 773888

3. WORK PERFORMED BY: TVA (COMPANY)
TYPE CODE SYMBOL STAMP [b] NA
P.O. Box 2000 (ADDRESS)
AUTHORIZATION NO. [b] NA
Decature, Alabama (CITY AND STATE)
EXPIRATION DATE [b] NA

4. IDENTIFICATION OF SYSTEM SYS 85, Control Rod Drive

5(A). APPLICATION CONSTRUCTION CODE Section III 19 74
EDITION with ADDENDA 1975 CODE CASE NA

5(B). APPLICATION EDITION OF SECTION XI UTILIZED FOR REPAIRS OR REPLACEMENTS: 1980

6(A). NAME OF COMPONENT(S) AND DESCRIPTION (INCLUDE SIZE, CAPACITY, MATERIAL, AND LOCATION AS NEEDED TO AID IN IDENTIFICATION)
BWR-6 CRD from Hartsville modified by GE for use at BFNP BWR-4

6(B). NAME OF MANUFACTURER GE
ADDRESS OF MANUFACTURER (IF KNOWN) UNKNOWN

6(C). MANUFACTURER'S SERIAL NUMBER A4276

6(D). NATIONAL BOARD NUMBER (IF APPLICABLE) N/A

6(E). OTHER IDENTIFICATION (SUBASSEMBLY NUMBER, HEAT NUMBER, ETC.)
2-CRD-85-0627

6(F). YEAR BUILT UNKNOWN CODE CLASS ☒ 1 ☐ 2

6(G). REPAIRED ☐ REPLACED ☒ [c] REPLACEMENT ☐ [d]

6(H). ASME CODE STAMPED YES ☒ NO ☐

7. BRIEF DESCRIPTION OF REPAIR OR REPLACEMENT WORK PERFORMED.
Replaced BWR-4 CRD with modified BWR-6 CRD.

8. TESTS CONDUCTED: HYDROSTATIC ☒ PNEUMATIC ☐
NOMINAL OPERATING PRESSURE ☐ OTHER ☐
PRESSURE 1158 PSI TEST TEMPERATURE 182 F[e]

9. REMARKS: Hydrostatic Test - to be conducted during vessel hydro per 2-SI-3.2.1.B, REF. W.O. 90-08936-00 J

( ) APPLICABLE MANUFACTURERS DATA REPORTS TO BE ATTACHED. M. Mayfield 7-3-91
RESPONSIBLE ENGR. Ernest F. Wallace Tech Spt DATE 5/22/90
ORGANIZATION
ANII DATE

* REF CAQR# CHA 890003713

[a] SHEET NOS. FILLED IN BY TESTING AND DIAGNOSTIC PROGRAMS BRANCH.
[b] FOR WORK PERFORMED BY CERTIFICATE HOLDER
[c] REPLACED (LIKE OR EQUIVALENT).
[d] REPLACEMENT (MODIFICATION).
[e] WHEN REQUIRED BY CONSTRUCTION CODE.

RETENTION PERIOD: LIFETIME RESPONSIBLE ORGANIZATION: NM-PROCESSES/SPECIAL PROGRAMS

3485 0290

TENNESSEE VALLEY AUTHORITY
BROWNS FERRY NUCLEAR PLANT
SITE DIRECTOR STANDARD PRACTICE

SEP 22 1989

FORM PAGE 1 OF 1
FORM SDSP-403
SDSP 13.3

FORM SDSP—403
FORM NIS—2 ATTACHMENT

1. (OWNER) TENNESSEE VALLEY AUTHORITY
NUCLEAR POWER

DATE 5-18-90

2. (PLANT) BROWNS FERRY NUCLEAR PLANT
P.O. BOX 2000
DECATUR, ALABAMA

SHEET [a] 169 OF 255

MR# 773889

3. WORK PERFORMED BY: TVA
COMPANY

TYPE CODE SYMBOL STAMP [b] NA

P.O. Box 2000
ADDRESS

AUTHORIZATION NO.[b] NA

Decature, Alabama
CITY AND STATE

EXPIRATION DATE [b] NA

4. IDENTIFICATION OF SYSTEM SYS 85, Control Rod Drive

5(A). APPLICATION CONSTRUCTION CODE Section III 19 74
EDITION with ADDENDA 1975 CODE CASE NA

5(B). APPLICATION EDITION OF SECTION XI UTILIZED FOR REPAIRS OR REPLACEMENTS: 1980

6(A). NAME OF COMPONENT(S) AND DESCRIPTION (INCLUDE SIZE, CAPACITY, MATERIAL, AND LOCATION AS NEEDED TO AID IN IDENTIFICATION)
BWR-6 CRD from Hartsville modified by GE for use at BFNP BWR-4

6(B). NAME OF MANUFACTURER GE
ADDRESS OF MANUFACTURER (IF KNOWN) UNKNOWN

6(C). MANUFACTURER'S SERIAL NUMBER A5076

6(D). NATIONAL BOARD NUMBER (IF APPLICABLE) N/A

6(E). OTHER IDENTIFICATION (SUBASSEMBLY NUMBER, HEAT NUMBER, ETC.)
2-CRD-85-1011 S/N A5076

6(F). YEAR BUILT UNKNOWN CODE CLASS ☒ 1 ☐ 2

6(G). REPAIRED ☐ REPLACED ☒ [c] REPLACEMENT ☐ [d]

6(H). ASME CODE STAMPED YES ☒ NO ☐

7. BRIEF DESCRIPTION OF REPAIR OR REPLACEMENT WORK PERFORMED.
Replaced BWR-4 CRD with modified BWR-6 CRD

8. TESTS CONDUCTED: HYDROSTATIC ☒ PNEUMATIC ☐
NOMINAL OPERATING PRESSURE ☐ OTHER ☐
PRESSURE 1158 PSI TEST TEMPERATURE 182 F°

9. REMARKS: Hydrostatic Test to be conducted during vessel hydro per 2-SI-3.3.1.B, REF. W.O. 90-08936-00J

( ) APPLICABLE MANUFACTURERS DATA REPORT[e] TO BE ATTACHED. M. Mouton 7-3-91
RESPONSIBLE ENGR. Ernest L. Williams Tech. Spt. DATE 5/18/90
ORGANIZATION

ANII DATE

* REF. CAQR# CHA 890003713

[a] SHEET NOS. FILLED IN BY TESTING AND DIAGNOSTIC PROGRAMS BRANCH.
[b] FOR WORK PERFORMED BY CERTIFICATE HOLDER
[c] REPLACED (LIKE OR EQUIVALENT).
[d] REPLACEMENT (MODIFICATION).
[e] WHEN REQUIRED BY CONSTRUCTION CODE.

RETENTION PERIOD: LIFETIME RESPONSIBLE ORGANIZATION: NM—PROCESSES/SPECIAL PROGRAMS

TENNESSEE VALLEY AUTHORITY
BROWNS FERRY NUCLEAR PLANT
SITE DIRECTOR STANDARD PRACTICE

SEP 22 1989

FORM PAGE 1 OF 3
FORM SDSP-403
SDSP 13.3

FORM SDSP-403
FORM NIS-2 ATTACHMENT

1. (OWNER) TENNESSEE VALLEY AUTHORITY
NUCLEAR POWER

DATE 5-18-90

2. (PLANT) BROWNS FERRY NUCLEAR PLANT
P.O. BOX 2000
DECATUR, ALABAMA

SHEET [a] 170 OF 255

MRA 773890

3. WORK PERFORMED BY: TVA
COMPANY

TYPE CODE SYMBOL STAMP [b] NA

P.O. Box 2000
ADDRESS

AUTHORIZATION NO. [b] NA

Decature, Alabama
CITY AND STATE

EXPIRATION DATE [b] NA

4. IDENTIFICATION OF SYSTEM SYS 85, Control Rod Drive

5(A). APPLICATION CONSTRUCTION CODE Section III 19 74
EDITION with ADDENDA 1975 CODE CASE NA

5(B). APPLICATION EDITION OF SECTION XI UTILIZED FOR REPAIRS OR REPLACEMENTS: 1980

6(A). NAME OF COMPONENT(S) AND DESCRIPTION (INCLUDE SIZE, CAPACITY, MATERIAL, AND LOCATION AS NEEDED TO AID IN IDENTIFICATION)
BWR-6 CRD from Hartsville modified by GE for use at BFNP BWR-4

6(B). NAME OF MANUFACTURER GE
ADDRESS OF MANUFACTURER (IF KNOWN) UNKNOWN

6(C). MANUFACTURER'S SERIAL NUMBER A5360

6(D). NATIONAL BOARD NUMBER (IF APPLICABLE) N/A

6(E). OTHER IDENTIFICATION (SUBASSEMBLY NUMBER, HEAT NUMBER, ETC.)
2-CRD-85-1027 Serial # A5360

6(F). YEAR BUILT UNKNOWN CODE CLASS ☒ 1 ☐ 2

6(G). REPAIRED ☐ REPLACED ☒ [c] REPLACEMENT ☐ [d]

6(H). ASME CODE STAMPED YES ☒ NO ☐

7. BRIEF DESCRIPTION OF REPAIR OR REPLACEMENT WORK PERFORMED.
Replaced BWR-4 CRD with modified BWR-6 CRD

8. TESTS CONDUCTED: HYDROSTATIC ☒ PNEUMATIC ☐
NOMINAL OPERATING PRESSURE ☐ OTHER ☐
PRESSURE 1158 PSI TEST TEMPERATURE 182 F°

9. REMARKS: Hydrostatic Test to be conducted during vessel hydro per A-SI-2.2.1.B. REF. W.O. 90-08936-00J

( ) APPLICABLE MANUFACTURERS DATA REPORT [e] TO BE ATTACHED.
RESPONSIBLE ENGR. Ernest L. Wallace / Tech Jr. DATE 5/18/90 M. Martin 7-3-91
ORGANIZATION *

ANII DATE

* REF CAQR# CHA 890003713

[a] SHEET NOS. FILLED IN BY TESTING AND DIAGNOSTIC PROGRAMS BRANCH.
[b] FOR WORK PERFORMED BY CERTIFICATE HOLDER
[c] REPLACED (LIKE OR EQUIVALENT).
[d] REPLACEMENT (MODIFICATION).
[e] WHEN REQUIRED BY CONSTRUCTION CODE.

RETENTION PERIOD: LIFETIME RESPONSIBLE ORGANIZATION: NM-PROCESSES/SPECIAL PROGRAMS

TENNESSEE VALLEY AUTHORITY
BROWNS FERRY NUCLEAR PLANT
SITE DIRECTOR STANDARD PRACTICE

SEP 22 1989

FORM SDSP-403
FORM NIS-2 ATTACHMENT

1. (OWNER) TENNESSEE VALLEY AUTHORITY
NUCLEAR POWER — DATE 5-18-90

2. (PLANT) BROWNS FERRY NUCLEAR PLANT
P.O. BOX 2000
DECATUR, ALABAMA — SHEET [a] 171 OF 255

MR# 773891

3. WORK PERFORMED BY: TVA (COMPANY) — TYPE CODE SYMBOL STAMP [b] NA
P.O. Box 2000 (ADDRESS) — AUTHORIZATION NO. [b] NA
Decature, Alabama (CITY AND STATE) — EXPIRATION DATE [b] NA

4. IDENTIFICATION OF SYSTEM SYS 85, Control Rod Drive

5(A). APPLICATION CONSTRUCTION CODE Section III 19 74
EDITION with ADDENDA 1975 CODE CASE NA

5(B). APPLICATION EDITION OF SECTION XI UTILIZED FOR REPAIRS OR REPLACEMENTS: 1980

6(A). NAME OF COMPONENT(S) AND DESCRIPTION (INCLUDE SIZE, CAPACITY, MATERIAL, AND LOCATION AS NEEDED TO AID IN IDENTIFICATION)
BWR-6 CRD from Hartsville modified by GE for use at BFNP BWR-4

6(B). NAME OF MANUFACTURER GE
ADDRESS OF MANUFACTURER (IF KNOWN) UNKNOWN

6(C). MANUFACTURER'S SERIAL NUMBER A4702

6(D). NATIONAL BOARD NUMBER (IF APPLICABLE) N/A

6(E). OTHER IDENTIFICATION (SUBASSEMBLY NUMBER, HEAT NUMBER, ETC.)
2-CRD-85-1443 Serial # A4702

6(F). YEAR BUILT UNKNOWN CODE CLASS [X] 1 [ ] 2

6(G). REPAIRED [ ] REPLACED [X] [c] REPLACEMENT [ ] [d]

6(H). ASME CODE STAMPED YES [X] NO [ ]

7. BRIEF DESCRIPTION OF REPAIR OR REPLACEMENT WORK PERFORMED.
Replaced BWR-4 CRD with modified BWR-6 CRD

8. TESTS CONDUCTED: HYDROSTATIC [X] PNEUMATIC [ ]
NOMINAL OPERATING PRESSURE [ ] OTHER [ ]
PRESSURE 1158 PSI TEST TEMPERATURE 182 F[e]

9. REMARKS: Hydrostatic Test to be conducted during vessel hydro per 2-SI-2.2.1.B. REF. W.O. 90-08936-00

( ) APPLICABLE MANUFACTURERS DATA REPORT[e] TO BE ATTACHED. M. Martin 7-3-91
RESPONSIBLE ENGR. Ernest Williams / Tech Spt DATE 5/12/90
ORGANIZATION
ANII _____ DATE _____

* REF CAQR# CHA890003713

[a] SHEET NOS. FILLED IN BY TESTING AND DIAGNOSTIC PROGRAMS BRANCH.
[b] FOR WORK PERFORMED BY CERTIFICATE HOLDER
[c] REPLACED (LIKE OR EQUIVALENT).
[d] REPLACEMENT (MODIFICATION).
[e] WHEN REQUIRED BY CONSTRUCTION CODE.

RETENTION PERIOD: LIFETIME RESPONSIBLE ORGANIZATION: NM-PROCESSES/SPECIAL PROGRAMS

TENNESSEE VALLEY AUTHORITY
BROWNS FERRY NUCLEAR PLANT
SITE DIRECTOR STANDARD PRACTICE

SEP 22 1989

FORM SDSP—403
FORM NIS—2 ATTACHMENT

1. (OWNER) TENNESSEE VALLEY AUTHORITY
NUCLEAR POWER
DATE 5-22-90

2. (PLANT) BROWNS FERRY NUCLEAR PLANT
P.O. BOX 2000
DECATUR, ALABAMA
SHEET [a] 172 OF 255
MR# 773892

3. WORK PERFORMED BY: TVA (COMPANY)
TYPE CODE SYMBOL STAMP [b] NA
P.O. Box 2000 (ADDRESS)
AUTHORIZATION NO. [b] NA
Decatur, Alabama (CITY AND STATE)
EXPIRATION DATE [b] NA

4. IDENTIFICATION OF SYSTEM SYS 85, Control Rod Drive

5(A). APPLICATION CONSTRUCTION CODE Section III 19 74
EDITION with ADDENDA 1975 CODE CASE NA

5(B). APPLICATION EDITION OF SECTION XI UTILIZED FOR REPAIRS OR REPLACEMENTS: 1980

6(A). NAME OF COMPONENT(S) AND DESCRIPTION (INCLUDE SIZE, CAPACITY, MATERIAL, AND LOCATION AS NEEDED TO AID IN IDENTIFICATION)
BWR-6 CRD from Hartsville modified by GE for use at BFNP BWR-4

6(B). NAME OF MANUFACTURER GE
ADDRESS OF MANUFACTURER (IF KNOWN) UNKNOWN

6(c). MANUFACTURER'S SERIAL NUMBER A 4349

6(D). NATIONAL BOARD NUMBER (IF APPLICABLE) N/A

6(E). OTHER IDENTIFICATION (SUBASSEMBLY NUMBER, HEAT NUMBER, ETC.)
2-CRD-85-185

6(F). YEAR BUILT UNKNOWN CODE CLASS ☒ 1 ☐ 2

6(G). REPAIRED ☐ REPLACED ☒ [c] REPLACEMENT ☐ [d]

6(H). ASME CODE STAMPED YES ☒ NO ☐

7. BRIEF DESCRIPTION OF REPAIR OR REPLACEMENT WORK PERFORMED.
Replaced BWR-4 CRD with modified BWR-6 CRD

8. TESTS CONDUCTED: HYDROSTATIC ☒ PNEUMATIC ☐
NOMINAL OPERATING PRESSURE ☐ OTHER ☐
PRESSURE 1158 PSI TEST TEMPERATURE 182 F°

9. REMARKS: Hydrostatic Test - to be conducted during vessel hydro per R-SE-2.2.1.B, REF. W.O. 90-08936-00

( ) APPLICABLE MANUFACTURERS DATA REPORT [e] TO BE ATTACHED
RESPONSIBLE ENGR. M. Martin 7-3-91
* Ernest J. Williams Tech Spl. DATE 5/22/90
ORGANIZATION
ANII DATE

* REF CAQR # CHA 890003713

[a] SHEET NOS. FILLED IN BY TESTING AND DIAGNOSTIC PROGRAMS BRANCH.
[b] FOR WORK PERFORMED BY CERTIFICATE HOLDER
[c] REPLACED (LIKE OR EQUIVALENT).
[d] REPLACEMENT (MODIFICATION).
[e] WHEN REQUIRED BY CONSTRUCTION CODE.

RETENTION PERIOD: LIFETIME RESPONSIBLE ORGANIZATION: NM—PROCESSES/SPECIAL PROGRAMS

TENNESSEE VALLEY AUTHORITY
BROWNS FERRY NUCLEAR PLANT
SITE DIRECTOR STANDARD PRACTICE

SEP 22 1989

FORM SDSP-403
FORM NIS-2 ATTACHMENT

1. (OWNER) TENNESSEE VALLEY AUTHORITY
NUCLEAR POWER — DATE 5-18-90

2. (PLANT) BROWNS FERRY NUCLEAR PLANT
P.O. BOX 2000
DECATUR, ALABAMA — SHEET [a] 173 OF 255

MR# 773893

3. WORK PERFORMED BY: TVA (COMPANY) — TYPE CODE SYMBOL STAMP [b] NA
P.O. Box 2000 (ADDRESS) — AUTHORIZATION NO. [b] NA
Decature, Alabama (CITY AND STATE) — EXPIRATION DATE [b] NA

4. IDENTIFICATION OF SYSTEM SYS 85 - Control Rod Drive

5(A). APPLICATION CONSTRUCTION CODE Section III 19 74
EDITION with ADDENDA 1975 CODE CASE NA

5(B). APPLICATION EDITION OF SECTION XI UTILIZED FOR REPAIRS OR REPLACEMENTS: 1980

6(A). NAME OF COMPONENT(S) AND DESCRIPTION (INCLUDE SIZE, CAPACITY, MATERIAL, AND LOCATION AS NEEDED TO AID IN IDENTIFICATION)
BWR-6 CRD from Hartsville modified by GE for use at BFNP BWR-4

6(B). NAME OF MANUFACTURER GE
ADDRESS OF MANUFACTURER (IF KNOWN) UNKNOWN

6(C). MANUFACTURER'S SERIAL NUMBER A5324

6(D). NATIONAL BOARD NUMBER (IF APPLICABLE) N/A

6(E). OTHER IDENTIFICATION (SUBASSEMBLY NUMBER, HEAT NUMBER, ETC.)
2-CRD-85-1837 S/N A5324

6(F). YEAR BUILT UNKNOWN CODE CLASS [X] 1 [ ] 2

6(G). REPAIRED [ ] REPLACED [X] [a] REPLACEMENT [ ] [d]

6(H). ASME CODE STAMPED YES [X] NO [ ]

7. BRIEF DESCRIPTION OF REPAIR OR REPLACEMENT WORK PERFORMED.
Replaced BWR-4 CRD with modified BWR-6 CRD

8. TESTS CONDUCTED: HYDROSTATIC [X] PNEUMATIC [ ]
NOMINAL OPERATING PRESSURE [ ] OTHER [ ]
PRESSURE 1158 PSI TEST TEMPERATURE 182 F°

9. REMARKS: Hydrostatic Test to be conducted during vessel hydro per R-SI-2.2.1.B, REF. W.O. 90-08936-00

( ) APPLICABLE MANUFACTURERS DATA REPORT [e] TO BE ATTACHED.
RESPONSIBLE ENGR. * Ernest J. Williams / Tech Spt. DATE 5/18/90 M. Martin 7-3-91
ORGANIZATION
ANII DATE

* REF. CAQR # CHA 890003713

[a] SHEET NOS. FILLED IN BY TESTING AND DIAGNOSTIC PROGRAMS BRANCH.
[b] FOR WORK PERFORMED BY CERTIFICATE HOLDER
[c] REPLACED (LIKE OR EQUIVALENT).
[d] REPLACEMENT (MODIFICATION).
[e] WHEN REQUIRED BY CONSTRUCTION CODE.

RETENTION PERIOD: LIFETIME RESPONSIBLE ORGANIZATION: NM-PROCESS/SPECIAL PROGRAMS

3485 0325

TENNESSEE VALLEY AUTHORITY
BROWNS FERRY NUCLEAR PLANT
SITE DIRECTOR STANDARD PRACTICE

SEP 22 1989

FORM PAGE 1 OF 1
FORM SDSP-403
SDSP 13.3

FORM SDSP-403
FORM NIS-2 ATTACHMENT

1. (OWNER) TENNESSEE VALLEY AUTHORITY
NUCLEAR POWER

DATE 5-22-90

2. (PLANT) BROWNS FERRY NUCLEAR PLANT
P.O. BOX 2000
DECATUR, ALABAMA

SHEET [a] 174 OF 255

MR# 773894

3. WORK PERFORMED BY: TVA (COMPANY)
P.O. Box 2000 (ADDRESS)
Decature, Alabama (CITY AND STATE)

TYPE CODE SYMBOL STAMP [b] NA
AUTHORIZATION NO. [b] NA
EXPIRATION DATE [b] NA

4. IDENTIFICATION OF SYSTEM SYS 85, Control Rod Drive

5(A). APPLICATION CONSTRUCTION CODE Section III 19 74
EDITION with ADDENDA 1975 CODE CASE NA

5(B). APPLICATION EDITION OF SECTION XI UTILIZED FOR REPAIRS OR REPLACEMENTS: 1980

6(A). NAME OF COMPONENT(S) AND DESCRIPTION (INCLUDE SIZE, CAPACITY, MATERIAL, AND LOCATION AS NEEDED TO AID IN IDENTIFICATION)
BWR-6 CRD from Hartsville modified by GE for use at BFNP BWR-4

6(B). NAME OF MANUFACTURER GE
ADDRESS OF MANUFACTURER (IF KNOWN) UNKNOWN

6(C). MANUFACTURER'S SERIAL NUMBER 84700

6(D). NATIONAL BOARD NUMBER (IF APPLICABLE) N/A

6(E). OTHER IDENTIFICATION (SUBASSEMBLY NUMBER, HEAT NUMBER, ETC.)
2-CRD-85-18515

6(F). YEAR BUILT UNKNOWN CODE CLASS ☒ 1 ☐ 2

6(G). REPAIRED ☐ REPLACED ☒ [c] REPLACEMENT ☐ [d]

6(H). ASME CODE STAMPED YES ☒ NO ☐

7. BRIEF DESCRIPTION OF REPAIR OR REPLACEMENT WORK PERFORMED.
Replaced BWR-4 CRD with modified BWR-6 CRD

8. TESTS CONDUCTED: HYDROSTATIC ☒ PNEUMATIC ☐
NOMINAL OPERATING PRESSURE ☐ OTHER ☐
PRESSURE 1158 PSI TEST TEMPERATURE 182 F°

9. REMARKS: Hydrostatic Test - to be conducted during vessel hydro per 2-SI-3.2.1.A, REF. W.O. 90-08936-00

( ) APPLICABLE MANUFACTURERS DATA REPORT [e] TO BE ATTACHED. M. Martin 7-3-91
RESPONSIBLE ENGR. Ewell Williams/Tech-Sol DATE 5/22/90
ORGANIZATION
ANII DATE

* REF. CAQR # CHA890003713

[a] SHEET NOS. FILLED IN BY TESTING AND DIAGNOSTIC PROGRAMS BRANCH.
[b] FOR WORK PERFORMED BY CERTIFICATE HOLDER
[c] REPLACED (LIKE OR EQUIVALENT).
[d] REPLACEMENT (MODIFICATION).
[e] WHEN REQUIRED BY CONSTRUCTION CODE.

RETENTION PERIOD: LIFETIME RESPONSIBLE ORGANIZATION: NM-PROCESSES/SPECIAL PROGRAMS

TENNESSEE VALLEY AUTHORITY
BROWNS FERRY NUCLEAR PLANT
SITE DIRECTOR STANDARD PRACTICE

SEP 22 1989

FORM SDSP-403
FORM NIS-2 ATTACHMENT

1. (OWNER) TENNESSEE VALLEY AUTHORITY
NUCLEAR POWER — DATE 5-18-90

2. (PLANT) BROWNS FERRY NUCLEAR PLANT
P.O. BOX 2000
DECATUR, ALABAMA — SHEET [a] 175 OF 255

MR# 773895

3. WORK PERFORMED BY: TVA (COMPANY) — TYPE CODE SYMBOL STAMP [b] NA
P.O. Box 2000 (ADDRESS) — AUTHORIZATION NO. [b] NA
Decature, Alabama (CITY AND STATE) — EXPIRATION DATE [b] NA

4. IDENTIFICATION OF SYSTEM SYS 85, Control Rod Drive

5(A). APPLICATION CONSTRUCTION CODE Section III 19 74
EDITION with ADDENDA 1975 CODE CASE NA

5(B). APPLICATION EDITION OF SECTION XI UTILIZED FOR REPAIRS OR REPLACEMENTS: 1980

6(A). NAME OF COMPONENT(S) AND DESCRIPTION (INCLUDE SIZE, CAPACITY, MATERIAL, AND LOCATION AS NEEDED TO AID IN IDENTIFICATION)
BWR-6 CRD from Hartsville modified by GE for use at BFNP BWR-4

6(B). NAME OF MANUFACTURER GE
ADDRESS OF MANUFACTURER (IF KNOWN) UNKNOWN

6(C). MANUFACTURER'S SERIAL NUMBER A4141

6(D). NATIONAL BOARD NUMBER (IF APPLICABLE) N/A

6(E). OTHER IDENTIFICATION (SUBASSEMBLY NUMBER, HEAT NUMBER, ETC.)
2-CRD-85-2211 S/N - A4141

6(F). YEAR BUILT UNKNOWN CODE CLASS ☒ 1 ☐ 2

6(G). REPAIRED ☐ REPLACED ☒ [c] REPLACEMENT ☐ [d]

6(H). ASME CODE STAMPED YES ☒ NO ☐

7. BRIEF DESCRIPTION OF REPAIR OR REPLACEMENT WORK PERFORMED.
Replaced BWR-4 CRD with modified BWR-6 CRD

8. TESTS CONDUCTED: HYDROSTATIC ☒ PNEUMATIC ☐
NOMINAL OPERATING PRESSURE ☐ OTHER ☐
PRESSURE 1158 PSI TEST TEMPERATURE 182 F°

9. REMARKS: Hydrostatic Test to be conducted during vessel hydro per 2-SI-3.3.1.B. REF. MO. 90-08936-00 J

( ) APPLICABLE MANUFACTURERS DATA REPORT [e] TO BE ATTACHED. M. Martin 7-3-91
RESPONSIBLE ENGR. Ernest J. Holbrook Test Eng DATE 5/12/90
ORGANIZATION *
ANII _____ DATE _____

* REF. CAQR# CHA890003713

[a] SHEET NOS. FILLED IN BY TESTING AND DIAGNOSTIC PROGRAMS BRANCH.
[b] FOR WORK PERFORMED BY CERTIFICATE HOLDER
[c] REPLACED (LIKE OR EQUIVALENT).
[d] REPLACEMENT (MODIFICATION).
[e] WHEN REQUIRED BY CONSTRUCTION CODE.

RETENTION PERIOD: LIFETIME RESPONSIBLE ORGANIZATION: NM-PROCESSES/SPECIAL PROGRAMS

TENNESSEE VALLEY AUTHORITY
BROWNS FERRY NUCLEAR PLANT
SITE DIRECTOR STANDARD PRACTICE

SEP 22 1989

FORM PAGE 1 OF 1
FORM SDSP-403
SDSP 13.3

FORM SDSP—403
FORM NIS—2 ATTACHMENT

1. (OWNER) TENNESSEE VALLEY AUTHORITY
NUCLEAR POWER

DATE 5-22-90

2. (PLANT) BROWNS FERRY NUCLEAR PLANT
P.O. BOX 2000
DECATUR, ALABAMA

SHEET [a] 176 OF 255

MRA 773896

3. WORK PERFORMED BY: TVA
COMPANY

TYPE CODE SYMBOL STAMP [b] NA

P.O. Box 2000
ADDRESS

AUTHORIZATION NO. [b] NA

Decature, Alabama
CITY AND STATE

EXPIRATION DATE [b] NA

4. IDENTIFICATION OF SYSTEM SYS 85, Control Rod Drive

5(A). APPLICATION CONSTRUCTION CODE Section III 19 74
EDITION with ADDENDA 1975 CODE CASE NA

5(B). APPLICATION EDITION OF SECTION XI UTILIZED FOR REPAIRS OR REPLACEMENTS: 1980.

6(A). NAME OF COMPONENT(S) AND DESCRIPTION (INCLUDE SIZE, CAPACITY, MATERIAL, AND LOCATION AS NEEDED TO AID IN IDENTIFICATION)
BWR-6 CRD from Hartsville modified by GE for use at BFNP BWR-4

6(B). NAME OF MANUFACTURER GE
ADDRESS OF MANUFACTURER (IF KNOWN) UNKNOWN

6(c). MANUFACTURER'S SERIAL NUMBER S/N A4102

6(D). NATIONAL BOARD NUMBER (IF APPLICABLE) N/A

6(E). OTHER IDENTIFICATION (SUBASSEMBLY NUMBER, HEAT NUMBER, ETC.)
2-CRD-85-2215

6(F). YEAR BUILT UNKNOWN CODE CLASS ☒ 1 ☐ 2

6(G). REPAIRED ☐ REPLACED ☒ [c] REPLACEMENT ☐ [d]

6(H). ASME CODE STAMPED YES ☒ NO ☐

7. BRIEF DESCRIPTION OF REPAIR OR REPLACEMENT WORK PERFORMED.
Replaced BWR-4 CRD with modified BWR-6 CRD

8. TESTS CONDUCTED: HYDROSTATIC ☒ PNEUMATIC ☐
NOMINAL OPERATING PRESSURE ☐ OTHER ☐
PRESSURE 1158 PSI TEST TEMPERATURE 182 F°

9. REMARKS: Hydrostatic Test to be conducted during vessel hydro per A-SE-2.2.1.B, REF. W.O. 90-08936-00

( ) APPLICABLE MANUFACTURERS DATA REPORT [e] TO BE ATTACHED.

RESPONSIBLE ENGR. Ernest F. Williams Mech Jr. DATE 5/22/90 M. Maytin 7-3-91
ORGANIZATION *

ANII _____ DATE _____

* REF. CAQR# CHA 890003713

[a] SHEET NOS. FILLED IN BY TESTING AND DIAGNOSTIC PROGRAMS BRANCH.
[b] FOR WORK PERFORMED BY CERTIFICATE HOLDER
[c] REPLACED (LIKE OR EQUIVALENT).
[d] REPLACEMENT (MODIFICATION).
[e] WHEN REQUIRED BY CONSTRUCTION CODE.

RETENTION PERIOD: LIFETIME RESPONSIBLE ORGANIZATION: NM—PROCESSES/SPECIAL PROGRAMS

TENNESSEE VALLEY AUTHORITY
BROWNS FERRY NUCLEAR PLANT
SITE DIRECTOR STANDARD PRACTICE

SEP 22 1989

FORM PAGE 1 OF 1
FORM SDSP-403
SDSP 13.3

FORM SDSP-403
FORM NIS-2 ATTACHMENT

1. (OWNER) TENNESSEE VALLEY AUTHORITY
NUCLEAR POWER

DATE 5-24-90

2. (PLANT) BROWNS FERRY NUCLEAR PLANT
P.O. BOX 2000
DECATUR, ALABAMA

SHEET [a] 177 OF 255

MR# 773897

3. WORK PERFORMED BY: TVA
COMPANY

TYPE CODE SYMBOL STAMP [b] NA

P.O. Box 2000
ADDRESS

AUTHORIZATION NO. [b] NA

Decature, Alabama
CITY AND STATE

EXPIRATION DATE [b] NA

4. IDENTIFICATION OF SYSTEM SYS 85, Control Rod Drive

5(A). APPLICATION CONSTRUCTION CODE Section III 19 74
EDITION with ADDENDA 1975 CODE CASE NA

5(B). APPLICATION EDITION OF SECTION XI UTILIZED FOR REPAIRS OR REPLACEMENTS: 1980

6(A). NAME OF COMPONENT(S) AND DESCRIPTION (INCLUDE SIZE, CAPACITY, MATERIAL, AND LOCATION AS NEEDED TO AID IN IDENTIFICATION)
BWR-6 CRD from Hartsville modified by GE for use at BFNP BWR-4

6(B). NAME OF MANUFACTURER GE
ADDRESS OF MANUFACTURER (IF KNOWN) UNKNOWN

6(C). MANUFACTURER'S SERIAL NUMBER A4846

6(D). NATIONAL BOARD NUMBER (IF APPLICABLE) N/A

6(E). OTHER IDENTIFICATION (SUBASSEMBLY NUMBER, HEAT NUMBER, ETC.)
2-CRD-85-2243

6(F). YEAR BUILT UNKNOWN CODE CLASS ☒ 1 ☐ 2

6(G). REPAIRED ☐ REPLACED ☒ [c] REPLACEMENT ☐ [d]

6(H). ASME CODE STAMPED YES ☒ NO ☐

7. BRIEF DESCRIPTION OF REPAIR OR REPLACEMENT WORK PERFORMED.
Replaced BWR-4 CRD with modified BWR-6 CRD

8. TESTS CONDUCTED: HYDROSTATIC ☒ PNEUMATIC ☐
NOMINAL OPERATING PRESSURE ☐ OTHER ☐
PRESSURE 1158 PSI TEST TEMPERATURE 182 F°

9. REMARKS: Hydrostatic Test to be conducted during vessel hydro per A-SI-3.3.1.B, REF W.O. 90-08936-00

( ) APPLICABLE MANUFACTURERS DATA REPORT [e] TO BE ATTACHED.

RESPONSIBLE ENGR. Ernest L. Williams Tech Spec ORGANIZATION M. Martin 7-3-91 DATE 5/24/90

ANII DATE

* REF. CAQR # CHA890103713.

[a] SHEET NOS. FILLED IN BY TESTING AND DIAGNOSTIC PROGRAMS BRANCH.
[b] FOR WORK PERFORMED BY CERTIFICATE HOLDER
[c] REPLACED (LIKE OR EQUIVALENT).
[d] REPLACEMENT (MODIFICATION).
[e] WHEN REQUIRED BY CONSTRUCTION CODE.

RETENTION PERIOD: LIFETIME RESPONSIBLE ORGANIZATION: NM—PROCESSES/SPECIAL PROGRAMS

TENNESSEE VALLEY AUTHORITY
BROWNS FERRY NUCLEAR PLANT
SITE DIRECTOR STANDARD PRACTICE

SEP 22 1989

FORM SDSP-403
FORM NIS-2 ATTACHMENT

1. (OWNER) TENNESSEE VALLEY AUTHORITY
NUCLEAR POWER — DATE 5-22-90

2. (PLANT) BROWNS FERRY NUCLEAR PLANT
P.O. BOX 2000
DECATUR, ALABAMA — SHEET [a] 178 OF 255

MR# 773898

3. WORK PERFORMED BY: TVA (COMPANY) — TYPE CODE SYMBOL STAMP [b] NA
P.O. Box 2000 (ADDRESS) — AUTHORIZATION NO. [b] NA
Decature, Alabama (CITY AND STATE) — EXPIRATION DATE [b] NA

4. IDENTIFICATION OF SYSTEM SYS 85, Control Rod Drive

5(A). APPLICATION CONSTRUCTION CODE Section III 19 74
EDITION with ADDENDA 1975 CODE CASE NA

5(B). APPLICATION EDITION OF SECTION XI UTILIZED FOR REPAIRS OR REPLACEMENTS: 1980

6(A). NAME OF COMPONENT(S) AND DESCRIPTION (INCLUDE SIZE, CAPACITY, MATERIAL, AND LOCATION AS NEEDED TO AID IN IDENTIFICATION)
BWR-6 CRD from Hartsville, modified by GE for use at BFNP BWR-4

6(B). NAME OF MANUFACTURER GE
ADDRESS OF MANUFACTURER (IF KNOWN) UNKNOWN

6(C). MANUFACTURER'S SERIAL NUMBER 44239

6(D). NATIONAL BOARD NUMBER (IF APPLICABLE) N/A

6(E). OTHER IDENTIFICATION (SUBASSEMBLY NUMBER, HEAT NUMBER, ETC.)
2-CRD-85-23651

6(F). YEAR BUILT UNKNOWN CODE CLASS ☒ 1 ☐ 2

6(G). REPAIRED ☐ REPLACED ☒ [c] REPLACEMENT ☐ [d]

6(H). ASME CODE STAMPED YES ☒ NO ☐

7. BRIEF DESCRIPTION OF REPAIR OR REPLACEMENT WORK PERFORMED.
Replaced BWR-4 CRD with modified BWR-6 CRD

8. TESTS CONDUCTED: HYDROSTATIC ☒ PNEUMATIC ☐
NOMINAL OPERATING PRESSURE ☐ OTHER ☐
PRESSURE 1158 PSI TEST TEMPERATURE 182 F°

9. REMARKS: Hydrostatic Test - to be conducted during vessel hydro per 2-SI-3.3.1.B. REF: W.O. 90-08936-00J

( ) APPLICABLE MANUFACTURERS DATA REPORT [e] TO BE ATTACHED.
RESPONSIBLE ENGR. Ernest L. Williams Jr. / M. Martin DATE 5/22/90 7-3-91
ORGANIZATION
ANII _____ DATE _____

REF. CAQR# CHA 890003713

[a] SHEET NOS. FILLED IN BY TESTING AND DIAGNOSTIC PROGRAMS BRANCH.
[b] FOR WORK PERFORMED BY CERTIFICATE HOLDER
[c] REPLACED (LIKE OR EQUIVALENT).
[d] REPLACEMENT (MODIFICATION).
[e] WHEN REQUIRED BY CONSTRUCTION CODE.

RETENTION PERIOD: LIFETIME RESPONSIBLE ORGANIZATION: NM-PROCESSES/SPECIAL PROGRAMS

TENNESSEE VALLEY AUTHORITY
BROWNS FERRY NUCLEAR PLANT
SITE DIRECTOR STANDARD PRACTICE

SEP 22 1989

FORM PAGE 1 OF 1
FORM SDSP-403
SDSP 13.3

FORM SDSP-403
FORM NIS-2 ATTACHMENT

1. (OWNER) TENNESSEE VALLEY AUTHORITY
NUCLEAR POWER

DATE 5-24-90

2. (PLANT) BROWNS FERRY NUCLEAR PLANT
P.O. BOX 2000
DECATUR, ALABAMA

SHEET [a] 179 OF 255

MR# 773899

3. WORK PERFORMED BY: TVA
COMPANY

TYPE CODE SYMBOL STAMP [b] NA

P.O. Box 2000
ADDRESS

AUTHORIZATION NO. [b] NA

Decature, Alabama
CITY AND STATE

EXPIRATION DATE [b] NA

4. IDENTIFICATION OF SYSTEM SYS 85, Control Rod Drive

5(A). APPLICATION CONSTRUCTION CODE Section III 19 74
EDITION with ADDENDA 1975 CODE CASE NA

5(B). APPLICATION EDITION OF SECTION XI UTILIZED FOR REPAIRS OR REPLACEMENTS: 1980

6(A). NAME OF COMPONENT(S) AND DESCRIPTION (INCLUDE SIZE, CAPACITY, MATERIAL, AND LOCATION AS NEEDED TO AID IN IDENTIFICATION)
BWR-6 CRD from Hartsville modified by GE for use at BFNP BWR-4

6(B). NAME OF MANUFACTURER GE
ADDRESS OF MANUFACTURER (IF KNOWN) UNKNOWN

6(c). MANUFACTURER'S SERIAL NUMBER A4795

6(D). NATIONAL BOARD NUMBER (IF APPLICABLE) N/A

6(E). OTHER IDENTIFICATION (SUBASSEMBLY NUMBER, HEAT NUMBER, ETC.)
2-CRD-85-2603

6(F). YEAR BUILT UNKNOWN CODE CLASS ☒ 1 ☐ 2

6(G). REPAIRED ☐ REPLACED ☒ [c] REPLACEMENT ☐ [d]

6(H). ASME CODE STAMPED YES ☒ NO ☐

7. BRIEF DESCRIPTION OF REPAIR OR REPLACEMENT WORK PERFORMED.
Replaced BWR-4 CRD with modified BWR-6 CRD

8. TESTS CONDUCTED: HYDROSTATIC ☒ PNEUMATIC ☐
NOMINAL OPERATING PRESSURE ☐ OTHER ☐
PRESSURE 1158 PSI TEST TEMPERATURE 182 F°

9. REMARKS: Hydrostatic Test to be conducted during vessel hydro per 2-SI-3.3.1.B. REF. W.O. 90-08936-00

( ) APPLICABLE MANUFACTURERS DATA REPORT [e] TO BE ATTACHED.

RESPONSIBLE ENGR. Ernest L. Williams / M. Martin 7-3-91 DATE 5/24/90
ORGANIZATION

ANII _____ DATE _____

* REF. CAQR# CHA890003713

[a] SHEET NOS. FILLED IN BY TESTING AND DIAGNOSTIC PROGRAMS BRANCH.
[b] FOR WORK PERFORMED BY CERTIFICATE HOLDER
[c] REPLACED (LIKE OR EQUIVALENT).
[d] REPLACEMENT (MODIFICATION).
[e] WHEN REQUIRED BY CONSTRUCTION CODE.

RETENTION PERIOD: LIFETIME RESPONSIBLE ORGANIZATION: NM-PROCESSES/SPECIAL PROGRAMS

TENNESSEE VALLEY AUTHORITY
BROWNS FERRY NUCLEAR PLANT
SITE DIRECTOR STANDARD PRACTICE

SEP 22 1989

FORM PAGE 1 OF 1
FORM SDSP-403
SDSP 13.3

FORM SDSP-403
FORM NIS-2 ATTACHMENT

1. (OWNER) TENNESSEE VALLEY AUTHORITY
NUCLEAR POWER

DATE ~~6-27-90~~ MRM 6-27-90 5-24-90

2. (PLANT) BROWNS FERRY NUCLEAR PLANT
P.O. BOX 2000
DECATUR, ALABAMA

SHEET [a] 180 OF 255

MR# 773900

3. WORK PERFORMED BY: TVA (COMPANY)
P.O. Box 2000 (ADDRESS)
Decature, Alabama (CITY AND STATE)

TYPE CODE SYMBOL STAMP [b] NA
AUTHORIZATION NO. [b] NA
EXPIRATION DATE [b] NA

4. IDENTIFICATION OF SYSTEM SYS 85, Control Rod Drive

5(A). APPLICATION CONSTRUCTION CODE Section III 19 74
EDITION with ADDENDA 1975 CODE CASE NA

5(B). APPLICATION EDITION OF SECTION XI UTILIZED FOR REPAIRS OR REPLACEMENTS: 1980

6(A). NAME OF COMPONENT(S) AND DESCRIPTION (INCLUDE SIZE, CAPACITY, MATERIAL, AND LOCATION AS NEEDED TO AID IN IDENTIFICATION)
BWR-6 CRD from Hartsville modified by GE for use at BFNP BWR-4

6(B). NAME OF MANUFACTURER GE
ADDRESS OF MANUFACTURER (IF KNOWN) UNKNOWN

6(C). MANUFACTURER'S SERIAL NUMBER A5234

6(D). NATIONAL BOARD NUMBER (IF APPLICABLE) N/A

6(E). OTHER IDENTIFICATION (SUBASSEMBLY NUMBER, HEAT NUMBER, ETC.)
2-CRD-85-2607

6(F). YEAR BUILT UNKNOWN CODE CLASS [X] 1 [ ] 2

6(G). REPAIRED [ ] REPLACED [X] [c] REPLACEMENT [ ] [d]

6(H). ASME CODE STAMPED YES [X] NO [ ]

7. BRIEF DESCRIPTION OF REPAIR OR REPLACEMENT WORK PERFORMED.
Replaced BWR-4 CRD with modified BWR-6 CRD

8. TESTS CONDUCTED: HYDROSTATIC [X] PNEUMATIC [ ]
NOMINAL OPERATING PRESSURE [ ] OTHER [ ]
PRESSURE 1158 PSI TEST TEMPERATURE 182 F°

9. REMARKS: Hydrostatic Test to be conducted during vessel hydro per 2-SI-3.3.1.B. REF. W.O. 90-08936-00

( ) APPLICABLE MANUFACTURERS DATA REPORT [e] TO BE ATTACHED.

M. Martin 7-3-91

RESPONSIBLE ENGR. * Ernest L. Williams Tech Spt. DATE 5/24/90
ORGANIZATION

ANII _____ DATE _____

* REF. CAQR # CHA 890003713

[a] SHEET NOS. FILLED IN BY TESTING AND DIAGNOSTIC PROGRAMS BRANCH.
[b] FOR WORK PERFORMED BY CERTIFICATE HOLDER
[c] REPLACED (LIKE OR EQUIVALENT).
[d] REPLACEMENT (MODIFICATION).
[e] WHEN REQUIRED BY CONSTRUCTION CODE.

RETENTION PERIOD: LIFETIME RESPONSIBLE ORGANIZATION: NM-PROCESSES/SPECIAL PROGRAMS

TENNESSEE VALLEY AUTHORITY
BROWNS FERRY NUCLEAR PLANT
SITE DIRECTOR STANDARD PRACTICE

SEP 22 1989

FORM SDSP-403
SDSP 13.3

FORM SDSP-403
FORM NIS-2 ATTACHMENT

1. (OWNER) TENNESSEE VALLEY AUTHORITY
NUCLEAR POWER

DATE 5-18-90

2. (PLANT) BROWNS FERRY NUCLEAR PLANT
P.O. BOX 2000
DECATUR, ALABAMA

SHEET [a] 181 OF 255

MR# 774771

3. WORK PERFORMED BY: TVA
COMPANY

TYPE CODE SYMBOL STAMP [b] N/A

P.O. BOX 2000
ADDRESS

AUTHORIZATION NO. [b] N/A

DECATUR, ALA
CITY AND STATE

EXPIRATION DATE [b] N/A

4. IDENTIFICATION OF SYSTEM 63/ STANDBY LIQUID CONTROL (SLC)

5(A). APPLICATION CONSTRUCTION CODE USAS B31.1.0 19 67
EDITION thru ADDENDA N/A CODE CASE N/A

5(B). APPLICATION EDITION OF SECTION XI UTILIZED FOR REPAIRS OR REPLACEMENTS: 1980

6(A). NAME OF COMPONENT(S) AND DESCRIPTION (INCLUDE SIZE, CAPACITY, MATERIAL, AND LOCATION AS NEEDED TO AID IN IDENTIFICATION)
2B SLC PUMP PLUNGERS

6(B). NAME OF MANUFACTURER UNION PUMP
ADDRESS OF MANUFACTURER (IF KNOWN)

6(c). MANUFACTURER'S SERIAL NUMBER S/N 274717

6(D). NATIONAL BOARD NUMBER (IF APPLICABLE) N/A

6(E). OTHER IDENTIFICATION (SUBASSEMBLY NUMBER, HEAT NUMBER, ETC.) N/A

6(F). YEAR BUILT 1968 CODE CLASS ☐ 1 ☒ 2

6(G). REPAIRED ☐ REPLACED ☒ [c] REPLACEMENT ☐ [d]

6(H). ASME CODE STAMPED YES ☐ NO ☒

7. BRIEF DESCRIPTION OF REPAIR OR REPLACEMENT WORK PERFORMED.
Replace 2B SLC Pump PLUNGERS

8. TESTS CONDUCTED: HYDROSTATIC ☐ PNEUMATIC ☐
NOMINAL OPERATING PRESSURE ☐ OTHER ☒
PRESSURE _____ PSI TEST TEMPERATURE _____ F°

9. REMARKS: TEST PER MCI-0-063-PMP001

( ) APPLICABLE MANUFACTURERS DATA REPORT [e] TO BE ATTACHED.

RESPONSIBLE ENGR. Michael Thompson / TECH Supp DATE 5-18-90
ORGANIZATION

* ANII _____ DATE _____

* REF CAQR# CHA 890003713

[a] SHEET NOS. FILLED IN BY TESTING AND DIAGNOSTIC PROGRAMS BRANCH.
[b] FOR WORK PERFORMED BY CERTIFICATE HOLDER
[c] REPLACED (LIKE OR EQUIVALENT).
[d] REPLACEMENT (MODIFICATION).
[e] WHEN REQUIRED BY CONSTRUCTION CODE.

RETENTION PERIOD: LIFETIME RESPONSIBLE ORGANIZATION: NM-PROCESSES/SPECIAL PROGRAMS

Tennessee Valley Authority
Browns Ferry Nuclear Plant

NOV 10 1986

Form SDSP-26
SDSP-13.3
Page 4 of 5

ASME SECTION XI SUMMARY REPORT

Tennessee Valley Authority
Office of Nuclear Power, 1750 CST2-C
Browns Ferry Nuclear Plant Unit 2
P.O. Box 2000
Decatur, Alabama

Comm. Service Date 3-1-75
System RHR
TVA Class II Small
Workplan/WR No. 774981

Furnish the following for the repair or replacement for the as-left condition of the component (after field work is complete). Mark all blanks (indicate NA for items which do not apply).

National Board Number of repaired or replaced component. N/A

Name of the components and description (include size, capacity, material, and location)--These requirements may be satisfied by attaching an applicable drawing.
FLANGE STUD 1½ A-193 B7 SA194 CL 2H

Name of Manufacturer N/A

Address of Manufacturer (if known)

Manufacturer's component identification numbers (i.e., serial number, subassembly number, heat number). If more than one component is replaced, attach weld map and identify items by item number. N/A

Brief description of repair or replacement work performed, including conditions observed and corrective measures taken, as applicable (reference DCR, CAR, etc.; drawing may be attached with attached affected area circled).
MISSING STUD REPLACED

Brief description of post repair or replacement tests and examinations (if required) by instruction or procedure number, TI-[illegible] MSI-0-000-PR0417

ANII/ANI name, employer, and business address R. Russell, Hartford

Date work completed 10/13/87

Cognizant Engineer Date
M. R. Martin 10-20-89

Retention: Period - Lifetime; Responsibility - Modification Supervisor

TENNESSEE VALLEY AUTHORITY
BROWNS FERRY NUCLEAR PLANT
SITE DIRECTOR STANDARD PRACTICE

SEP 22 1989

FORM PAGE 1 OF 1
FORM SDSP-403
SDSP 13.3

FORM SDSP-403
FORM NIS-2 ATTACHMENT

1. (OWNER) TENNESSEE VALLEY AUTHORITY
NUCLEAR POWER

DATE 2-2-91

2. (PLANT) BROWNS FERRY NUCLEAR PLANT
P.O. BOX 2000
DECATUR, ALABAMA

SHEET [a] 183 OF 255

MRH A 77555 8

3. WORK PERFORMED BY: TVA
COMPANY

TYPE CODE SYMBOL STAMP [b] NA

P.O. Box 2000
ADDRESS

AUTHORIZATION NO. [b] NA

DECATUR, AL
CITY AND STATE

EXPIRATION DATE [b] NA

4. IDENTIFICATION OF SYSTEM 73, HPCI

5(A). APPLICATION CONSTRUCTION CODE USAS B31.1.0 19 67
EDITION 1967 ADDENDA WINTER CODE CASE N/A

5(B). APPLICATION EDITION OF SECTION XI UTILIZED FOR REPAIRS OR REPLACEMENTS: 1980

6(A). NAME OF COMPONENT(S) AND DESCRIPTION (INCLUDE SIZE, CAPACITY, MATERIAL, AND LOCATION AS NEEDED TO AID IN IDENTIFICATION)
4" PIPE FLANGE LOCATED OFF OF HPCI PMP DISCHARGE PIPING, REPLACED STUDS AND NUTS TO FLANGE

6(B). NAME OF MANUFACTURER NA (UNKNOWN)
ADDRESS OF MANUFACTURER (IF KNOWN) N/A

6(c). MANUFACTURER'S SERIAL NUMBER NA

6(D). NATIONAL BOARD NUMBER (IF APPLICABLE) NA

6(E). OTHER IDENTIFICATION (SUBASSEMBLY NUMBER, HEAT NUMBER, ETC.) NA

6(F). YEAR BUILT NA CODE CLASS ☐ 1 ☒ 2

6(G). REPAIRED ☐ REPLACED ☒ [c] REPLACEMENT ☐ [d]

6(H). ASME CODE STAMPED YES ☐ NO ☒

7. BRIEF DESCRIPTION OF REPAIR OR REPLACEMENT WORK PERFORMED.
REPLACED STUDS AND NUTS TO 4" PIPE FLANGE LOCATED OFF OF MAIN PMP (HPCI) DISCHARGE PIPING

8. TESTS CONDUCTED: HYDROSTATIC ☐ NA PNEUMATIC ☐ NA
NOMINAL OPERATING PRESSURE ☐ OTHER ☐
PRESSURE N/A PSI TEST TEMPERATURE N/A F[•]

9. REMARKS: MRM 2-2-91 ~~NONE~~ NO TESTING REQUIRE FOR SECTION XI, STUDS REPLACED ONE AT A TIME.

( ) APPLICABLE MANUFACTURERS DATA REPORT [•] TO BE ATTACHED.

RESPONSIBLE ENGR. Albert E. Cole / Mech. Maint ORGANIZATION DATE 2-2-91

ANII R. Russell ORGANIZATION DATE 2-4-91

[a] SHEET NOS. FILLED IN BY TESTING AND DIAGNOSTIC PROGRAMS BRANCH.
[b] FOR WORK PERFORMED BY CERTIFICATE HOLDER
[c] REPLACED (LIKE OR EQUIVALENT).
[d] REPLACEMENT (MODIFICATION).
[•] WHEN REQUIRED BY CONSTRUCTION CODE.

RETENTION PERIOD: LIFETIME RESPONSIBLE ORGANIZATION: NM-PROCESSES/SPECIAL PROGRAMS

TENNESSEE VALLEY AUTHORITY
BROWNS FERRY NUCLEAR PLANT
SITE DIRECTOR STANDARD PRACTICE

SEP 22 1989

FORM PAGE 1 OF 1
FORM SDSP-403
SDSP 13.3

FORM SDSP-403
FORM NIS-2 ATTACHMENT

SHEET 184 of 255

REFERENCE CAQR# CHA890003713

1. (OWNER) TENNESSEE VALLEY AUTHORITY
NUCLEAR POWER

DATE 05/03/90

2. (PLANT) BROWNS FERRY NUCLEAR PLANT
P.O. BOX 2000
DECATUR, ALABAMA

SHEET [a] I OF I

MR# 775691

3. WORK PERFORMED BY: TVA
COMPANY

TYPE CODE SYMBOL STAMP [b] N/A

P.O. BOX 2000
ADDRESS

AUTHORIZATION NO. [b] N/A

DECATUR ALABAMA
CITY AND STATE

EXPIRATION DATE [b] N/A

4. IDENTIFICATION OF SYSTEM SYSTEM 74-RHR

5(A). APPLICATION CONSTRUCTION CODE USAS B31.1.0 19 67
EDITION THRU ADDENDA N/A CODE CASE N/A

5(B). APPLICATION EDITION OF SECTION XI UTILIZED FOR REPAIRS OR REPLACEMENTS: 1980

6(A). NAME OF COMPONENT(S) AND DESCRIPTION (INCLUDE SIZE, CAPACITY, MATERIAL, AND LOCATION AS NEEDED TO AID IN IDENTIFICATION)
UNIT 2, EL-536, SW QUAD, RHR PUMP RM, A/C

6(B). NAME OF MANUFACTURER BERGEN PATERSON
ADDRESS OF MANUFACTURER (IF KNOWN) N/A

6(c). MANUFACTURER'S SERIAL NUMBER F-93503

6(D). NATIONAL BOARD NUMBER (IF APPLICABLE) N/A

6(E). OTHER IDENTIFICATION (SUBASSEMBLY NUMBER, HEAT NUMBER, ETC.) N/A

6(F). YEAR BUILT UNKNOWN CODE CLASS ☐ 1 ☒ 2

6(G). REPAIRED ☒ REPLACED ☒ [c] REPLACEMENT ☐ [d]

6(H). ASME CODE STAMPED YES ☐ NO ☒

7. BRIEF DESCRIPTION OF REPAIR OR REPLACEMENT WORK PERFORMED
SNUBBER WAS DUE FOR REBUILD. SNUBBER WAS REMOVED AND ANOTHER SNUBBER WAS INSTALLED IN IT'S PLACE. THE SNUBBER THAT WAS REMOVED WAS REBUI

8. TESTS CONDUCTED: HYDROSTATIC ☐ PNEUMATIC ☐
NOMINAL OPERATING PRESSURE ☐ OTHER ☐
PRESSURE N/A PSI TEST TEMPERATURE N/A F°

9. REMARKS:

( ) APPLICABLE MANUFACTURERS DATA REPORT [e] TO BE ATTACHED.
RESPONSIBLE ENGR. RW AYCOCK / SYSTEMS DATE 05/03/90
ORGANIZATION

ANII _____ DATE _____

* REF CAQR# CHA890003713

[a] SHEET NOS. FILLED IN BY TESTING AND DIAGNOSTIC PROGRAMS BRANCH.
[b] FOR WORK PERFORMED BY CERTIFICATE HOLDER
[c] REPLACED (LIKE OR EQUIVALENT).
[d] REPLACEMENT (MODIFICATION).
[e] WHEN REQUIRED BY CONSTRUCTION CODE.

RETENTION PERIOD: LIFETIME RESPONSIBLE ORGANIZATION: NM-PROCESSES/SPECIAL PROGRAMS

Tennessee Valley Authority
Browns Ferry Nuclear Plant

NOV 10 1986

Form SDSP-26
SDSP-13.3
Page 4 of 5

ASME SECTION XI SUMMARY REPORT

Tennessee Valley Authority
Office of Nuclear Power, 1750 CST2-C
Browns Ferry Nuclear Plant Unit 2
P.O. Box 2000
Decatur, Alabama

Comm. Service Date ~~3/1/8~~ 11/8/24/87 3/1/75
System RHR #74
TVA Class D
Workplan (MR) No. A-778324

Furnish the following for the repair or replacement for the as-left condition of the component (after field work is complete). Mark all blanks (indicate NA for items which do not apply).

National Board Number of repaired or replaced component. NA

Name of the components and description (include size, capacity, material, and location)--Theses requirements may be satisfied by attaching an applicable drawing.
RHR HANGER H-37 STRUCTURAL STEEL WELDS, CARBON STEEL A-36, TOP OF TORUS, EL. 555', BAY 1

Name of Manufacturer NA

Address of Manufacturer (if known) NA

Manufacturer's component identification numbers (i.e., serial number, subassembly number, heat number). If more than one component is replaced, attach weld map and identify items by item number. NA

Brief description of repair or replacement work performed, including conditions observed and corrective measures taken, as applicable (reference DCR, CAR, etc.; drawing may be attached with attached affected area circled).
TEMPORARY SUPPORT INSTALLED PER MMI-164 DURING WELD GRIND-OUT AND REPAIR. ALL WELDING ON RHR H-37 WAS DONE ON MR'S A-770983 & A-770977.

Brief description of post repair or replacement tests and examinations (if required) by instruction or procedure number.
NO REPAIR DONE ON THIS MR.

ANII/ANI name, employer, and business address HARTFORD STEAMBOILER INSP & INS. CO.
1117 PERIMETER CENTER WEST, SUITE E-301
ATLANTA, GA. 30338

Date work completed 10/15/87

Cognizant Engineer — Date 10/16/87

Retention: Period - Lifetime; Responsibility - Modifications Supervisor

Tennessee Valley Authority
Browns Ferry Nuclear Plant

NOV 10 1986

Form SDSP-26
SDSP-13.3
Page 4 of 5

ASME SECTION XI SUMMARY REPORT

Tennessee Valley Authority
Office of Nuclear Power, 1750 CST2-C
Browns Ferry Nuclear Plant Unit 2
P.O. Box 2000
Decatur, Alabama

Comm. Service Date 3/1/75
System RHR #74
TVA Class D
Workplan/HR No. A-778326

Furnish the following for the repair or replacement for the as-left condition of the component (after field work is complete). Mark all blanks (indicate NA for items which do not apply).

National Board Number of repaired or replaced component. NA

Name of the components and description (include size, capacity, material, and location)—Theses requirements may be satisfied by attaching an applicable drawing.
RHR RESTRAINT R-36 ~~INTEGRALLY~~ WELDED ATTACHMENT WELD #A36 TO A36, RT OF TORUS, EL 555', BAY 1

Name of Manufacturer NA

Address of Manufacturer (if known) NA

Manufacturer's component identification numbers (i.e., serial number, subassembly number, heat number). If more than one component is replaced, attach weld map and identify items by item number. NA

Brief description of repair or replacement work performed, including conditions observed and corrective measures taken, as applicable (reference DCR, CAR, etc.; drawing may be attached with attached affected area circled).
WELD REPAIR LINEAR IND. REMOVAL EXCAVATION PER SDSP 18.1 / SM-P-1.

Brief description of post repair or replacement tests and examinations (if required) by instruction or procedure number.
N-UT-1, N-UT-2

ANII/ANI name, employer, and business address
HARTFORD STEAMBOILER INSPECTION AND INSURANCE CO
1117 PERIMETER WEST, SUITE E-301, ATLANTA GA. 30338

Date work completed 7/20/87

Cognizant Engineer 10/27/87
Date

Retention: Period - Lifetime; Responsibility - Modifications Supervisor

Tennessee Valley Authority
Browns Ferry Nuclear Plant

NOV 10 1986

Form SDSP-26
SDSP-13.3
Page 4 of 5

ASME SECTION XI SUMMARY REPORT

Tennessee Valley Authority
Office of Nuclear Power, 1750 CST2-C
Browns Ferry Nuclear Plant Unit 2
P.O. Box 2000
Decatur, Alabama

Comm. Service Date 3/1/75
System RHR #74
TVA Class D
Workplan (MR) No. A-778337

Furnish the following for the repair or replacement for the as-left condition of the component (after field work is complete). Mark all blanks (indicate NA for items which do not apply).

National Board Number of repaired or replaced component. NA

Name of the components and description (include size, capacity, material, and location)—Theses requirements may be satisfied by attaching an applicable drawing.
RHR HANGER H-56, RX BLDG., A&C HEAT EXC. RM EL. 565'

Name of Manufacturer NA

Address of Manufacturer (if known) NA

Manufacturer's component identification numbers (i.e., serial number, subassembly number, heat number). If more than one component is replaced, attach weld map and identify items by item number. NA

Brief description of repair or replacement work performed, including conditions observed and corrective measures taken, as applicable (reference DCR, CAR, etc.; drawing may be attached with attached affected area circled).
WELD REPAIR PERFORMED PER SDSP 13.1 AND WELD MAP ATTACHMENT "A".
*ANI PREWORK REVIEW WAS NOT PERFORM AS REQUIRED BY ASME SECTION XI, ANII THEREFORE CAQR # RFD 870282 WAS INITIATED.

Brief description of post repair or replacement tests and examinations (if required) by instruction or procedure number.
NDE EXAMINATIONS N-VT-3, N-PT-1 & N-RT-1 WERE PERFORMED AS SPECIFIED BY SDSP 13.1.

ANII/ANI name, employer, and business address
* RFI CAQR # 87-[illegible]

Date work completed 5/1/87

[signature] 11/6/87
Cognizant Engineer Date

Retention: Period - Lifetime; Responsibility - Modifications Supervisor

Tennessee Valley Authority
Browns Ferry Nuclear Plant

NOV 10 1986

Form SDSP-26
SDSP-13.3
Page 4 of 5

ASME SECTION XI SUMMARY REPORT

Tennessee Valley Authority
Office of Nuclear Power, 1750 CST2-C
Browns Ferry Nuclear Plant Unit 2
P.O. Box 2000
Decatur, Alabama

Comm. Service Date 3/1/75
System CRD # 85
TVA Class B and/or C
Workplan (MR) No. A-778342

Furnish the following for the repair or replacement for the as-left condition of the component (after field work is complete). Mark all blanks (indicate NA for items which do not apply).

National Board Number of repaired or replaced component. NA

Name of the components and description (include size, capacity, material, and location)--Theses requirements may be satisfied by attaching an applicable drawing.
CRD HANGER # CRD-2-217, CARBON STEEL A-36, RX BLDG. EL. 565, WEST HEADER

Name of Manufacturer NA

Address of Manufacturer (if known) NA

Manufacturer's component identification numbers (i.e., serial number, subassembly number, heat number). If more than one component is replaced, attach weld map and identify items by item number. NA

Brief description of repair or replacement work performed, including conditions observed and corrective measures taken, as applicable (reference DCR, CAR, etc.; drawing may be attached with attached affected area circled).
SLAB HOLE EXCAVATED AT REPAIRED PER SDSP13.1 / SM-P.1

Brief description of post repair or replacement tests and examinations (if required) by instruction or procedure number.
N-VT-2

ANII/ANI name, employer, and business address HARTFORD STEAM BOILER INSP. & INSURANCE CO.
1117 PERIMETER CENTER WEST SUITE E-301
ATLANTA, GA. 30338

Date work completed 7/14/87

[signature] 10/2/87
Cognizant Engineer Date

Retention: Period - Lifetime; Responsibility - Modifications Supervisor

Tennessee Valley Authority
Browns Ferry Nuclear Plant

NOV 10 1986

Form SDSP-26
SDSP-13.3
Page 4 of 5

ASME SECTION XI SUMMARY REPORT

SHEET 189 of 255

Tennessee Valley Authority
Office of Nuclear Power, 1750 CST2-C
Browns Ferry Nuclear Plant Unit 2
P.O. Box 2000
Decatur, Alabama

Comm. Service Date 3-1-75
System #74
TVA Class D
Workplan (MR) No. 778485

Furnish the following for the repair or replacement for the as-left condition of the component (after field work is complete). Mark all blanks (indicate NA for items which do not apply).

National Board Number of repaired or replaced component. N/A

Name of the components and description (include size, capacity, material, and location)--Theses requirements may be satisfied by attaching an applicable drawing.
RHR R-12 END ~~PIP~~ 7/18 9/24/87 STRUCTURAL ATTACHMENT WELDS

Name of Manufacturer ~~N/A~~ 7/18 9/24/87 N/A

Address of Manufacturer (if known) N/A

Manufacturer's component identification numbers (i.e., serial number, subassembly number, heat number). If more than one component is replaced, attach weld map and identify items by item number. N/A

Brief description of repair or replacement work performed, including conditions observed and corrective measures taken, as applicable (reference DCR, CAR, etc.; drawing may be attached with attached affected area circled).
END ATTACHMENT WELDS OF RHR R-12 BUILT UP PER SDSP 13.1 AND DESIGN DRAWING RHR 12-2 SH 2 OF 3

Brief description of post repair or replacement tests and examinations (if required) by instruction or procedure number.
N-VT-1

ANII/ANI name, employer, and business address HARTFORD STEAMBOILER INSP. & INS CO.
1127 PERIMETER CENTER WEST, SUITE E-301
ATLANTA, GA 30338

Date work completed 11/3/87

Cognizant Engineer — Date 11/4/87

Retention: Period - Lifetime; Responsibility - Modifications Supervisor

TENNESSEE VALLEY AUTHORITY
BROWNS FERRY NUCLEAR PLANT
SITE DIRECTOR STANDARD PRACTICE

SEP 22 1989

FORM PAGE 1 OF 1
FORM SDSP-403
SDSP 13.3

SHEET 190 of 255

FORM SDSP-403
FORM NIS-2 ATTACHMENT

REF. CAQR # CHA890003713

1. (OWNER) TENNESSEE VALLEY AUTHORITY
NUCLEAR POWER

DATE 05/30/90

2. (PLANT) BROWNS FERRY NUCLEAR PLANT
P.O. BOX 2000
DECATUR, ALABAMA

SHEET [a] 1 OF 1

MR# 795760

3. WORK PERFORMED BY: TVA (COMPANY)
PO BOX 2000 (ADDRESS)
DECATUR ALA (CITY AND STATE)

TYPE CODE SYMBOL STAMP [b] N/A
AUTHORIZATION NO. [b] N/A
EXPIRATION DATE [b] N/A

4. IDENTIFICATION OF SYSTEM SYSTEM 68 REPIRC-SS5A

5(A). APPLICATION CONSTRUCTION CODE USAS B31.1.0 19 67
EDITION THRU ADDENDA N/A CODE CASE N/A

5(B). APPLICATION EDITION OF SECTION XI UTILIZED FOR REPAIRS OR REPLACEMENTS: 1980

6(A). NAME OF COMPONENT(S) AND DESCRIPTION (INCLUDE SIZE, CAPACITY, MATERIAL, AND LOCATION AS NEEDED TO AID IN IDENTIFICATION)
UNIT-2, RXBLDG, EL-580, AZ-262, SS5A

6(B). NAME OF MANUFACTURER BERGEN PATERSON
ADDRESS OF MANUFACTURER (IF KNOWN) UNKNOWN

6(c). MANUFACTURER'S SERIAL NUMBER 2500-30-353

6(D). NATIONAL BOARD NUMBER (IF APPLICABLE) N/A

6(E). OTHER IDENTIFICATION (SUBASSEMBLY NUMBER, HEAT NUMBER, ETC.) N/A

6(F). YEAR BUILT N/A CODE CLASS ☒ 1 ☐ 2

6(G). REPAIRED ☒ REPLACED ☒ [c] REPLACEMENT ☐ [d]

6(H). ASME CODE STAMPED YES ☐ NO ☒

7. BRIEF DESCRIPTION OF REPAIR OR REPLACEMENT WORK PERFORMED.
SNUBBER WAS REMOVED AND ANOTHER UNIT WAS INSTALLED

8. TESTS CONDUCTED: HYDROSTATIC ☐ PNEUMATIC ☐
NOMINAL OPERATING PRESSURE ☐ OTHER ☐
PRESSURE N/A PSI TEST TEMPERATURE N/A F°

9. REMARKS:

( ) APPLICABLE MANUFACTURERS DATA REPORT [e] TO BE ATTACHED.
RESPONSIBLE ENGR. R.W. AVCOCK * SYSTEMS ORGANIZATION DATE 05/30/90

ANII DATE

* REF CAQR # CHA890003713

[a] SHEET NOS. FILLED IN BY TESTING AND DIAGNOSTIC PROGRAMS BRANCH.
[b] FOR WORK PERFORMED BY CERTIFICATE HOLDER
[c] REPLACED (LIKE OR EQUIVALENT).
[d] REPLACEMENT (MODIFICATION).
[e] WHEN REQUIRED BY CONSTRUCTION CODE.

RETENTION PERIOD: LIFETIME RESPONSIBLE ORGANIZATION: NM-PROCESSES/SPECIAL PROGRAMS

Tennessee Valley Authority
Browns Ferry Nuclear Plant

NOV 10 1986

Form SDSP-26
SDSP-13.3
Page 4 of 5

ASME SECTION XI SUMMARY REPORT

Tennessee Valley Authority
Office of Nuclear Power, 1750 CST2-C
Browns Ferry Nuclear Plant Unit 2
P.O. Box 2000
Decatur, Alabama

Comm. Service Date 1974
System (74) RHR
TVA Class A
Workplan (MR) No. A-795810

Furnish the following for the repair or replacement for the as-left condition of the component (after field work is complete). Mark all blanks (indicate NA for items which do not apply).

National Board Number of repaired or replaced component. N/A

Name of the components and description (include size, capacity, material, and location)--Theses requirements may be satisfied by attaching an applicable drawing.
RHR GATE VALVE 24" STAINLESS STEEL, WALWORTH DWG NUMBER 12.334 M-1-E CONTRACT # 90744

Name of Manufacturer WALWORTH COMPANY

Address of Manufacturer (if known) GREENSBURG, PA.

Manufacturer's component identification numbers (i.e., serial number, subassembly number, heat number). If more than one component is replaced, attach weld map and identify items by item number. BONNET GASKET SEAL WALWORTH P/N 636664 AND VALVE STEM WALWORTH P/N 0638505 STAINLESS STEEL

Brief description of repair or replacement work performed, including conditions observed and corrective measures taken, as applicable (reference DCR, CAR, etc.; drawing may be attached with attached affected area circled).
DISASSEMBLED VALVE AND REPLACED VALVE STEM AND PRESSURE SEAL GASKET

Brief description of post repair or replacement tests and examinations (if required) by instruction or procedure number. N-VT-1 (VALVE STEM & GASKET) N-PT-1, N-VT-3, LLRT (SI 4.7.A.2.G) CLOSURE TIME TEST (SI-3.2.10)

ANII/ANI name, employer, and business address ROOSEVELT RUSSELL, JR. THE HARTFORD STEAM BOILER INSPECTION AND INSURANCE CO. 1117 PERIMETER CENTER WEST, SUITE E-301, ATLANTA, GA. 30338.

Date work completed 1-8-90

Albert E. Cooke 10/5/90
Cognizant Engineer Date

Retention: Period - Lifetime; Responsibility - Modifications Supervisor

TENNESSEE VALLEY AUTHORITY
BROWNS FERRY NUCLEAR PLANT
SITE DIRECTOR STANDARD PRACTICE

SEP 22 1989

FORM SDSP—403
FORM NIS—2 ATTACHMENT

1. (OWNER) TENNESSEE VALLEY AUTHORITY
NUCLEAR POWER — DATE 5-17-90

2. (PLANT) BROWNS FERRY NUCLEAR PLANT
P.O. BOX 2000
DECATUR, ALABAMA — SHEET [a] 192 OF 255

MR# 795815

3. WORK PERFORMED BY: TVA (COMPANY) — TYPE CODE SYMBOL STAMP [b] NA
P.O. Box 2000 (ADDRESS) — AUTHORIZATION NO. [b] NA
Decature, Alabama (CITY AND STATE) — EXPIRATION DATE [b] NA

4. IDENTIFICATION OF SYSTEM SYS 85, Control Rod Drive.

5(A). APPLICATION CONSTRUCTION CODE Section III 19 74
EDITION with ADDENDA 1975 CODE CASE NA

5(B). APPLICATION EDITION OF SECTION XI UTILIZED FOR REPAIRS OR REPLACEMENTS: 1980

6(A). NAME OF COMPONENT(S) AND DESCRIPTION (INCLUDE SIZE, CAPACITY, MATERIAL, AND LOCATION AS NEEDED TO AID IN IDENTIFICATION)
BWR-6 CRD from Hartsville modified by GE for use at BFNP BWR-4.

6(B). NAME OF MANUFACTURER GE
ADDRESS OF MANUFACTURER (IF KNOWN) UNKNOWN

6(c). MANUFACTURER'S SERIAL NUMBER A5666

6(D). NATIONAL BOARD NUMBER (IF APPLICABLE) N/A

6(E). OTHER IDENTIFICATION (SUBASSEMBLY NUMBER, HEAT NUMBER, ETC.)
2-CRD-85-1047 S/N A5666

6(F). YEAR BUILT UNKNOWN CODE CLASS ☒ 1 ☐ 2

6(G). REPAIRED ☐ REPLACED ☒ [c] REPLACEMENT ☐ [d]

6(H). ASME CODE STAMPED YES ☒ NO ☐

7. BRIEF DESCRIPTION OF REPAIR OR REPLACEMENT WORK PERFORMED.
Replaced BWR-4 CRD with modified BWR-6 CRD

8. TESTS CONDUCTED: HYDROSTATIC ☒ PNEUMATIC ☐
NOMINAL OPERATING PRESSURE ☐ OTHER ☐
PRESSURE 1158 PSI TEST TEMPERATURE 182 F°

9. REMARKS: Hydrostatic Test to be conducted during vessel hydro per 2-SI-3.3.1.B, REF. W.O. 90-08936-00

( ) APPLICABLE MANUFACTURERS DATA REPORT [e] TO BE ATTACHED. M. Manton 7-3-91
RESPONSIBLE ENGR. * Ernest E. Williams / Tech Spec DATE 5/17/90
ORGANIZATION
ANII DATE

6-27-90 MRA
* REF ~~W.O.~~ CAQR # CHA 89 000 3713.

[a] SHEET NOS. FILLED IN BY TESTING AND DIAGNOSTIC PROGRAMS BRANCH.
[b] FOR WORK PERFORMED BY CERTIFICATE HOLDER
[c] REPLACED (LIKE OR EQUIVALENT).
[d] REPLACEMENT (MODIFICATION).
[e] WHEN REQUIRED BY CONSTRUCTION CODE.

RETENTION PERIOD: LIFETIME RESPONSIBLE ORGANIZATION: NM—PROCESS S/SPECIAL PROGRAMS —

TENNESSEE VALLEY AUTHORITY
BROWNS FERRY NUCLEAR PLANT
SITE DIRECTOR STANDARD PRACTICE

SEP 22 1989

FORM PAGE 1 OF 1
FORM SDSP-403
SDSP 13.3

FORM SDSP-403
FORM NIS-2 ATTACHMENT

1. (OWNER) TENNESSEE VALLEY AUTHORITY
NUCLEAR POWER

DATE 5-18-90

2. (PLANT) BROWNS FERRY NUCLEAR PLANT
P.O. BOX 2000
DECATUR, ALABAMA

SHEET [a] 193 OF 255

MR# 795816

3. WORK PERFORMED BY: TVA (COMPANY)
P.O. Box 2000 (ADDRESS)
Decature, Alabama (CITY AND STATE)

TYPE CODE SYMBOL STAMP [b] NA
AUTHORIZATION NO. [b] NA
EXPIRATION DATE [b] NA

4. IDENTIFICATION OF SYSTEM SYS 85, Control Rod Drive

5(A). APPLICATION CONSTRUCTION CODE Section III 19 74
EDITION with ADDENDA 1975 CODE CASE NA

5(B). APPLICATION EDITION OF SECTION XI UTILIZED FOR REPAIRS OR REPLACEMENTS: 1980

6(A). NAME OF COMPONENT(S) AND DESCRIPTION (INCLUDE SIZE, CAPACITY, MATERIAL, AND LOCATION AS NEEDED TO AID IN IDENTIFICATION)
BWR-6 CRD from Hartsville modified by GE for use at BFNP BWR-4

6(B). NAME OF MANUFACTURER GE
ADDRESS OF MANUFACTURER (IF KNOWN) UNKNOWN

6(C). MANUFACTURER'S SERIAL NUMBER 4233

6(D). NATIONAL BOARD NUMBER (IF APPLICABLE) N/A

6(E). OTHER IDENTIFICATION (SUBASSEMBLY NUMBER, HEAT NUMBER, ETC.)
2CRD-85-1807 S/N-4233

6(F). YEAR BUILT UNKNOWN CODE CLASS [X] 1 [ ] 2

6(G). REPAIRED [ ] REPLACED [X] [c] REPLACEMENT [ ] [d]

6(H). ASME CODE STAMPED YES [X] NO [ ]

7. BRIEF DESCRIPTION OF REPAIR OR REPLACEMENT WORK PERFORMED.
Replaced BWR-4 CRD with modified BWR-6 CRD

8. TESTS CONDUCTED: HYDROSTATIC [X] PNEUMATIC [ ]
NOMINAL OPERATING PRESSURE [ ] OTHER [ ]
PRESSURE 1158 PSI TEST TEMPERATURE 182 F°

9. REMARKS: Hydrostatic Test to be conducted during vessel hydro per R-SI-3.3.1.B ; REF W.O. 90-08936-00 J

( ) APPLICABLE MANUFACTURERS DATA REPORT [e] TO BE ATTACHED.
RESPONSIBLE ENGR. Ernest L. Williams Jr. DATE 5/18/90 M. Morton 7-3-91
ORGANIZATION *
ANII DATE

* REF. CAQRA CHA 890003713

[a] SHEET NOS. FILLED IN BY TESTING AND DIAGNOSTIC PROGRAMS BRANCH.
[b] FOR WORK PERFORMED BY CERTIFICATE HOLDER
[c] REPLACED (LIKE OR EQUIVALENT).
[d] REPLACEMENT (MODIFICATION).
[e] WHEN REQUIRED BY CONSTRUCTION CODE.

RETENTION PERIOD: LIFETIME RESPONSIBLE ORGANIZATION: NM--PROCESSES/SPECIAL PROGRAMS

TENNESSEE VALLEY AUTHORITY
BROWNS FERRY NUCLEAR PLANT
SITE DIRECTOR STANDARD PRACTICE

SEP 22 1989

FORM PAGE 1 OF 1
FORM SDSP-403
SDSP 13.3

FORM SDSP-403
FORM NIS-2 ATTACHMENT

1. (OWNER) TENNESSEE VALLEY AUTHORITY
NUCLEAR POWER

DATE 6-26-90

2. (PLANT) BROWNS FERRY NUCLEAR PLANT
P.O. BOX 2000
DECATUR, ALABAMA

SHEET [a] 194 OF 255

MAR 795817

3. WORK PERFORMED BY: TVA
COMPANY

TYPE CODE SYMBOL STAMP [b] NA

P.O. Box 2000
ADDRESS

AUTHORIZATION NO. [b] NA

Decature, Alabama
CITY AND STATE

EXPIRATION DATE [b] NA

4. IDENTIFICATION OF SYSTEM SYS 85, Control Rod Drive

5(A). APPLICATION CONSTRUCTION CODE Section III 19 74
EDITION with ADDENDA 1975 CODE CASE NA

5(B). APPLICATION EDITION OF SECTION XI UTILIZED FOR REPAIRS OR REPLACEMENTS: 1980

6(A). NAME OF COMPONENT(S) AND DESCRIPTION (INCLUDE SIZE, CAPACITY, MATERIAL, AND LOCATION AS NEEDED TO AID IN IDENTIFICATION)
BWR-6 CRD from Hartsville: modified by GE for use at BFNP BWR-4

6(B). NAME OF MANUFACTURER GE
ADDRESS OF MANUFACTURER (IF KNOWN) UNKNOWN

6(C). MANUFACTURER'S SERIAL NUMBER A3837 3

6(D). NATIONAL BOARD NUMBER (IF APPLICABLE) N/A

6(E). OTHER IDENTIFICATION (SUBASSEMBLY NUMBER, HEAT NUMBER, ETC.)
2-CRD-85-2207 Serial # A3837

6(F). YEAR BUILT UNKNOWN CODE CLASS ☒ 1 ☐ 2

6(G). REPAIRED ☐ REPLACED ☒ [c] REPLACEMENT ☐ [d]

6(H). ASME CODE STAMPED YES ☒ NO ☐

7. BRIEF DESCRIPTION OF REPAIR OR REPLACEMENT WORK PERFORMED.
Replaced BWR-4 CRD with modified BWR-6 CRD

8. TESTS CONDUCTED: HYDROSTATIC ☒ PNEUMATIC ☐
NOMINAL OPERATING PRESSURE ☐ OTHER ☐
PRESSURE 1158 PSI TEST TEMPERATURE 182 F°

9. REMARKS: Hydrostatic Test to be conducted during vessel hydro per 2-SI-2.2.1.B. REF. W.O. 90-089360 0J

( ) APPLICABLE MANUFACTURERS DATA REPORT [e] TO BE ATTACHED. M. Martin 7-3-91
RESPONSIBLE ENGR. Earl L. Williams Tech Spt. DATE 5/18/90
ORGANIZATION
ANII DATE

* REF CAQRA CHA890003713

[a] SHEET NOS. FILLED IN BY TESTING AND DIAGNOSTIC PROGRAMS BRANCH.
[b] FOR WORK PERFORMED BY CERTIFICATE HOLDER
[c] REPLACED (LIKE OR EQUIVALENT).
[d] REPLACEMENT (MODIFICATION).
[e] WHEN REQUIRED BY CONSTRUCTION CODE.

RETENTION PERIOD: LIFETIME RESPONSIBLE ORGANIZATION: NM-PROCESSES/SPECIAL PROGRAMS

TENNESSEE VALLEY AUTHORITY
BROWNS FERRY NUCLEAR PLANT
SITE DIRECTOR STANDARD PRACTICE

SEP 22 1989

FORM SDSP-403
FORM NIS-2 ATTACHMENT

1. (OWNER) TENNESSEE VALLEY AUTHORITY
NUCLEAR POWER — DATE 5-17-90

2. (PLANT) BROWNS FERRY NUCLEAR PLANT
P.O. BOX 2000
DECATUR, ALABAMA — SHEET [a] 195 OF 255

MR# 79 5818

3. WORK PERFORMED BY: TVA (COMPANY) — TYPE CODE SYMBOL STAMP [b] NA
P.O. Box 2000 (ADDRESS) — AUTHORIZATION NO. [b] NA
Decature, Alabama (CITY AND STATE) — EXPIRATION DATE [b] NA

4. IDENTIFICATION OF SYSTEM SYS 85, Control Rod Drive

5(A). APPLICATION CONSTRUCTION CODE Section III 19 74
EDITION with ADDENDA 1975 CODE CASE NA

5(B). APPLICATION EDITION OF SECTION XI UTILIZED FOR REPAIRS OR REPLACEMENTS: 1980

6(A). NAME OF COMPONENT(S) AND DESCRIPTION (INCLUDE SIZE, CAPACITY, MATERIAL, AND LOCATION AS NEEDED TO AID IN IDENTIFICATION)
BWR-6 CRD from Hartsville modified by GE for use of BFNP BWR-4

6(B). NAME OF MANUFACTURER GE
ADDRESS OF MANUFACTURER (IF KNOWN) UNKNOWN

6(C). MANUFACTURER'S SERIAL NUMBER A2271

6(D). NATIONAL BOARD NUMBER (IF APPLICABLE) N/A

6(E). OTHER IDENTIFICATION (SUBASSEMBLY NUMBER, HEAT NUMBER, ETC.)
2-CRD-85-3003 S/N A2271

6(F). YEAR BUILT UNKNOWN CODE CLASS ☒ 1 ☐ 2

6(G). REPAIRED ☐ REPLACED ☒ [c] REPLACEMENT ☐ [d]

6(H). ASME CODE STAMPED YES ☒ NO ☐

7. BRIEF DESCRIPTION OF REPAIR OR REPLACEMENT WORK PERFORMED.
Replaced BWR-4 CRD with modified BWR-6 CRD

8. TESTS CONDUCTED: HYDROSTATIC ☒ PNEUMATIC ☐
NOMINAL OPERATING PRESSURE ☐ OTHER ☐
PRESSURE 1158 PSI TEST TEMPERATURE 182 F°

9. REMARKS: Hydrostatic Test to be conducted during vessel hydro per 2-SI-3.3.1.B. REF. W.O. 90-08936-00

( ) APPLICABLE MANUFACTURERS DATA REPORT [e] TO BE ATTACHED. M. Martin 7-3-91
RESPONSIBLE ENGR. Emil L. Williams / Ted Jet DATE 5/12/90
ORGANIZATION *
ANII DATE

* REF. CAQR. CHA 890003713

[a] SHEET NOS. FILLED IN BY TESTING AND DIAGNOSTIC PROGRAMS BRANCH.
[b] FOR WORK PERFORMED BY CERTIFICATE HOLDER
[c] REPLACED (LIKE OR EQUIVALENT).
[d] REPLACEMENT (MODIFICATION).
[e] WHEN REQUIRED BY CONSTRUCTION CODE.

RETENTION PERIOD: LIFETIME RESPONSIBLE ORGANIZATION: NM-PROCESSES/SPECIAL PROGRAMS

TENNESSEE VALLEY AUTHORITY
BROWNS FERRY NUCLEAR PLANT
SITE DIRECTOR STANDARD PRACTICE

SEP 22 1989

FORM PAGE 1 OF 1
FORM SDSP-403
SDSP 13.3

FORM SDSP-403
FORM NIS-2 ATTACHMENT

1. (OWNER) TENNESSEE VALLEY AUTHORITY
NUCLEAR POWER

DATE 5-24-90

2. (PLANT) BROWNS FERRY NUCLEAR PLANT
P.O. BOX 2000
DECATUR, ALABAMA

SHEET [a] 196 OF 255

MRA 795819

3. WORK PERFORMED BY: TVA (COMPANY)
P.O. Box 2000 (ADDRESS)
Decature, Alabama (CITY AND STATE)

TYPE CODE SYMBOL STAMP [b] NA
AUTHORIZATION NO. [b] NA
EXPIRATION DATE [b] NA

4. IDENTIFICATION OF SYSTEM SYS 85, Control Rod Drive

5(A). APPLICATION CONSTRUCTION CODE Section III 19 74
EDITION with ADDENDA 1975 CODE CASE NA

5(B). APPLICATION EDITION OF SECTION XI UTILIZED FOR REPAIRS OR REPLACEMENTS: 1980

6(A). NAME OF COMPONENT(S) AND DESCRIPTION (INCLUDE SIZE, CAPACITY, MATERIAL, AND LOCATION AS NEEDED TO AID IN IDENTIFICATION)
BWR-6 CRD from Hartsville modified by GE for use at BFNP BWR-4

6(B). NAME OF MANUFACTURER GE
ADDRESS OF MANUFACTURER (IF KNOWN) UNKNOWN

6(c). MANUFACTURER'S SERIAL NUMBER A3710

6(D). NATIONAL BOARD NUMBER (IF APPLICABLE) N/A

6(E). OTHER IDENTIFICATION (SUBASSEMBLY NUMBER, HEAT NUMBER, ETC.)
2-CRD-85-3014

6(F). YEAR BUILT UNKNOWN CODE CLASS ☒ 1 ☐ 2

6(G). REPAIRED ☐ REPLACED ☒ [c] REPLACEMENT ☐ [d]

6(H). ASME CODE STAMPED YES ☒ NO ☐

7. BRIEF DESCRIPTION OF REPAIR OR REPLACEMENT WORK PERFORMED.
Replaced BWR-4 CRD with modified BWR-6 CRD

8. TESTS CONDUCTED: HYDROSTATIC ☒ PNEUMATIC ☐
NOMINAL OPERATING PRESSURE ☐ OTHER ☐
PRESSURE 1158 PSI TEST TEMPERATURE 182 F°

9. REMARKS: Hydrostatic Test to be conducted during vessel hydro per 2-SI-3.3.1.A, REF. W.O. 90-08936-00 J

( ) APPLICABLE MANUFACTURERS DATA REPORT [e] TO BE ATTACHED. M. Maynor 7-3-91
RESPONSIBLE ENGR. Ernest L. Williams Tech Spt DATE 5/24/90
ORGANIZATION
ANII _____ DATE _____

* REF. CAQR# CHA 890003713

[a] SHEET NOS. FILLED IN BY TESTING AND DIAGNOSTIC PROGRAMS BRANCH.
[b] FOR WORK PERFORMED BY CERTIFICATE HOLDER
[c] REPLACED (LIKE OR EQUIVALENT).
[d] REPLACEMENT (MODIFICATION).
[e] WHEN REQUIRED BY CONSTRUCTION CODE.

RETENTION PERIOD: LIFETIME RESPONSIBLE ORGANIZATION: NM-PROCESSES/SPECIAL PROGRAMS

TENNESSEE VALLEY AUTHORITY
BROWNS FERRY NUCLEAR PLANT
SITE DIRECTOR STANDARD PRACTICE

SEP 22 1999

FORM PAGE 1 OF 1
FORM: SDSP-403
SDSP 13.3

FORM SDSP-403
FORM NIS-2 ATTACHMENT

1. (OWNER) TENNESSEE VALLEY AUTHORITY
NUCLEAR POWER — DATE 5-24-90

2. (PLANT) BROWNS FERRY NUCLEAR PLANT
P.O. BOX 2000
DECATUR, ALABAMA — SHEET [a] 197 OF 255

MR# 795820

3. WORK PERFORMED BY: TVA (COMPANY) — TYPE CODE SYMBOL STAMP [b] NA
P.O. Box 2000 (ADDRESS) — AUTHORIZATION NO. [b] NA
Decature, Alabama (CITY AND STATE) — EXPIRATION DATE [b] NA

4. IDENTIFICATION OF SYSTEM SYS 85, Control Rod Drive

5(A). APPLICATION CONSTRUCTION CODE Section III 19 74
EDITION with ADDENDA 1975 CODE CASE NA

5(B). APPLICATION EDITION OF SECTION XI UTILIZED FOR REPAIRS OR REPLACEMENTS: 1980

6(A). NAME OF COMPONENT(S) AND DESCRIPTION (INCLUDE SIZE, CAPACITY, MATERIAL, AND LOCATION AS NEEDED TO AID IN IDENTIFICATION)
BWR-6 CRD from Hartsville - modified by GE for use at BFNP BWR-4

6(B). NAME OF MANUFACTURER GE
ADDRESS OF MANUFACTURER (IF KNOWN) UNKNOWN

6(C). MANUFACTURER'S SERIAL NUMBER A5154

6(D). NATIONAL BOARD NUMBER (IF APPLICABLE) N/A

6(E). OTHER IDENTIFICATION (SUBASSEMBLY NUMBER, HEAT NUMBER, ETC.)
2-CRD-85-3031

6(F). YEAR BUILT UNKNOWN CODE CLASS ☒ 1 ☐ 2

6(G). REPAIRED ☐ REPLACED ☒ [c] REPLACEMENT ☐ [d]

6(H). ASME CODE STAMPED YES ☒ NO ☐

7. BRIEF DESCRIPTION OF REPAIR OR REPLACEMENT WORK PERFORMED.
Replaced BWR-4 CRD with modified BWR-6 CRD

8. TESTS CONDUCTED: HYDROSTATIC ☒ PNEUMATIC ☐
NOMINAL OPERATING PRESSURE ☐ OTHER ☐
PRESSURE 1158 PSI TEST TEMPERATURE 182 F°

9. REMARKS: Hydrostatic Test to be conducted during vessel hydro per 2-SE-3.3.1.B ; REF. W.O. 90-08936-00

( ) APPLICABLE MANUFACTURERS DATA REPORT [e] TO BE ATTACHED.
RESPONSIBLE ENGR. Ernest L. Williams Tech Spec DATE 5/24/90 M. Maynton 7-3-91
ORGANIZATION *
ANII DATE

* REF. CAQR. # CHA890003713 :

[a] SHEET NOS. FILLED IN BY TESTING AND DIAGNOSTIC PROGRAMS BRANCH.
[b] FOR WORK PERFORMED BY CERTIFICATE HOLDER
[c] REPLACED (LIKE OR EQUIVALENT).
[d] REPLACEMENT (MODIFICATION).
[e] WHEN REQUIRED BY CONSTRUCTION CODE.

RETENTION PERIOD: LIFETIME RESPONSIBLE ORGANIZATION: NM-PROCESSES/SPECIAL PROGRAMS

TENNESSEE VALLEY AUTHORITY
BROWNS FERRY NUCLEAR PLANT
SITE DIRECTOR STANDARD PRACTICE

SEP 22 1989

FORM PAGE 1 OF 1
FORM SDSP-403
SDSP 13.3

FORM SDSP-403
FORM NIS-2 ATTACHMENT

1. (OWNER) TENNESSEE VALLEY AUTHORITY
NUCLEAR POWER
DATE 5-24-90

2. (PLANT) BROWNS FERRY NUCLEAR PLANT
P.O. BOX 2000
DECATUR, ALABAMA
SHEET [a] 198 OF 255
MR# 795821

3. WORK PERFORMED BY: TVA (COMPANY)
P.O. Box 2000 (ADDRESS)
Decature, Alabama (CITY AND STATE)
TYPE CODE SYMBOL STAMP [b] NA
AUTHORIZATION NO. [b] NA
EXPIRATION DATE [b] NA

4. IDENTIFICATION OF SYSTEM SYS 85, Control Rod Drive

5(A). APPLICATION CONSTRUCTION CODE Section III 19 74
EDITION with ADDENDA 1975 CODE CASE NA

5(B). APPLICATION EDITION OF SECTION XI UTILIZED FOR REPAIRS OR REPLACEMENTS: 1980

6(A). NAME OF COMPONENT(S) AND DESCRIPTION (INCLUDE SIZE, CAPACITY, MATERIAL, AND LOCATION AS NEEDED TO AID IN IDENTIFICATION)
BWR-6 CRD from Hartsville modified by GE for use at BFNP BWR-4

6(B). NAME OF MANUFACTURER GE
ADDRESS OF MANUFACTURER (IF KNOWN) UNKNOWN

6(c). MANUFACTURER'S SERIAL NUMBER A-5550

6(D). NATIONAL BOARD NUMBER (IF APPLICABLE) N/A

6(E). OTHER IDENTIFICATION (SUBASSEMBLY NUMBER, HEAT NUMBER, ETC.)
2-CRD-85-2051

6(F). YEAR BUILT UNKNOWN. CODE CLASS: [X] 1 [ ] 2

6(G). REPAIRED [ ] REPLACED [X] [c] REPLACEMENT [ ] [d]

6(H). ASME CODE STAMPED YES [X] NO [ ]

7. BRIEF DESCRIPTION OF REPAIR OR REPLACEMENT WORK PERFORMED.
Replaced BWR-4 CRD with modified BWR-6 CRD

8. TESTS CONDUCTED: HYDROSTATIC [X] PNEUMATIC [ ]
NOMINAL OPERATING PRESSURE [ ] OTHER [ ]
PRESSURE 1158 PSI TEST TEMPERATURE 182 F°

9. REMARKS: Hydrostatic Test to be conducted during vessel hydro per A-SI-2.2.1.A, REF. W.O. 90-08936-00

( ) APPLICABLE MANUFACTURERS DATA REPORT [e] TO BE ATTACHED. M. Martin 7-3-91
RESPONSIBLE ENGR. Ernest L. Williams / Tech Spec DATE 5/24/90
ORGANIZATION
ANII DATE

*REF. CAQR# CHA 890003713

[a] SHEET NOS. FILLED IN BY TESTING AND DIAGNOSTIC PROGRAMS BRANCH.
[b] FOR WORK PERFORMED BY CERTIFICATE HOLDER
[c] REPLACED (LIKE OR EQUIVALENT).
[d] REPLACEMENT (MODIFICATION).
[e] WHEN REQUIRED BY CONSTRUCTION CODE.

RETENTION PERIOD: LIFETIME RESPONSIBLE ORGANIZATION: NM-PROCESSES/SPECIAL PROGRAMS

TENNESSEE VALLEY AUTHORITY
BROWNS FERRY NUCLEAR PLANT
SITE DIRECTOR STANDARD PRACTICE

SEP 22 1989

FORM PAGE 1 OF 1
FORM SDSP-403
SDSP 13.3

FORM SDSP-403
FORM NIS-2 ATTACHMENT

1. (OWNER) TENNESSEE VALLEY AUTHORITY
NUCLEAR POWER

DATE 5-18-90

2. (PLANT) BROWNS FERRY NUCLEAR PLANT
P.O. BOX 2000
DECATUR, ALABAMA

SHEET [a] 199 OF 255

MR# 795822

3. WORK PERFORMED BY: TVA (COMPANY)
P.O. Box 2000 (ADDRESS)
Decature, Alabama (CITY AND STATE)

TYPE CODE SYMBOL STAMP [b] NA
AUTHORIZATION NO. [b] NA
EXPIRATION DATE [b] NA

4. IDENTIFICATION OF SYSTEM SYS 85, Control Rod Drive

5(A). APPLICATION CONSTRUCTION CODE Section III 19 74
EDITION with ADDENDA 1975 CODE CASE NA

5(B). APPLICATION EDITION OF SECTION XI UTILIZED FOR REPAIRS OR REPLACEMENTS: 1980

6(A). NAME OF COMPONENT(S) AND DESCRIPTION (INCLUDE SIZE, CAPACITY, MATERIAL, AND LOCATION AS NEEDED TO AID IN IDENTIFICATION)
BWR-6 CRD from Hartsville modified by GE for use at BFNP BWR-4

6(B). NAME OF MANUFACTURER GE
ADDRESS OF MANUFACTURER (IF KNOWN) UNKNOWN

6(c). MANUFACTURER'S SERIAL NUMBER A4412

6(D). NATIONAL BOARD NUMBER (IF APPLICABLE) N/A

6(E). OTHER IDENTIFICATION (SUBASSEMBLY NUMBER, HEAT NUMBER, ETC.)
2-CRD-85-1055 S/N A4412

6(F). YEAR BUILT UNKNOWN CODE CLASS ☒ 1 ☐ 2

6(G). REPAIRED ☐ REPLACED ☒ [c] REPLACEMENT ☐ [d]

6(H). ASME CODE STAMPED YES ☒ NO ☐

7. BRIEF DESCRIPTION OF REPAIR OR REPLACEMENT WORK PERFORMED.
Replaced BWR-4 CRD with modified BWR-6 CRD

8. TESTS CONDUCTED: HYDROSTATIC ☒ PNEUMATIC ☐
NOMINAL OPERATING PRESSURE ☐ OTHER ☐
PRESSURE 1158 PSI TEST TEMPERATURE 182 F°

9. REMARKS: Hydrostatic Test to be conducted during vessel hydro per A-SI-2.2.1.A, REF W.O. 90-08936-00 *

( ) APPLICABLE MANUFACTURERS DATA REPORT [e] TO BE ATTACHED. M. Murphy 7-3-91
RESPONSIBLE ENGR. Emil J. Wilkins / Tech Spt. DATE 5/18/90
ORGANIZATION

ANII _____ DATE _____

* REF. CAQR# CHA890003713

[a] SHEET NOS. FILLED IN BY TESTING AND DIAGNOSTIC PROGRAMS BRANCH.
[b] FOR WORK PERFORMED BY CERTIFICATE HOLDER
[c] REPLACED (LIKE OR EQUIVALENT).
[d] REPLACEMENT (MODIFICATION).
[e] WHEN REQUIRED BY CONSTRUCTION CODE.

RETENTION PERIOD: LIFETIME RESPONSIBLE ORGANIZATION: NM-PROCESSES/SPECIAL PROGRAMS

TENNESSEE VALLEY AUTHORITY
BROWNS FERRY NUCLEAR PLANT
SITE DIRECTOR STANDARD PRACTICE

SEP 22 1989

FORM PAGE 1 OF 1
FORM SDSP-403
SDSP 13.3

FORM SDSP—403
FORM NIS—2 ATTACHMENT

1. (OWNER) TENNESSEE VALLEY AUTHORITY
NUCLEAR POWER

DATE 5-17-90

2. (PLANT) BROWNS FERRY NUCLEAR PLANT
P.O. BOX 2000
DECATUR, ALABAMA

SHEET [a] 200 OF 255

MR# 795823

3. WORK PERFORMED BY: TVA (COMPANY)
P.O. Box 2000 (ADDRESS)
Decature, Alabama (CITY AND STATE)

TYPE CODE SYMBOL STAMP [b] NA
AUTHORIZATION NO. [b] NA
EXPIRATION DATE [b] NA

4. IDENTIFICATION OF SYSTEM SYS 85, Control Rod Drive

5(A). APPLICATION CONSTRUCTION CODE Section III 19 74
EDITION with ADDENDA 1975 CODE CASE NA

5(B). APPLICATION EDITION OF SECTION XI UTILIZED FOR REPAIRS OR REPLACEMENTS: 1980

6(A). NAME OF COMPONENT(S) AND DESCRIPTION (INCLUDE SIZE, CAPACITY, MATERIAL, AND LOCATION AS NEEDED TO AID IN IDENTIFICATION)
BWR-6 CRD from Hartsville modified by GE for use at BFNP BWR-4.

6(B). NAME OF MANUFACTURER GE
ADDRESS OF MANUFACTURER (IF KNOWN) UNKNOWN

6(c). MANUFACTURER'S SERIAL NUMBER A4690

6(D). NATIONAL BOARD NUMBER (IF APPLICABLE) N/A

6(E). OTHER IDENTIFICATION (SUBASSEMBLY NUMBER, HEAT NUMBER, ETC.)
2-CRD-85-3423 S/N A4690

6(F). YEAR BUILT UNKNOWN CODE CLASS ☒ 1 ☐ 2

6(G). REPAIRED ☐ REPLACED ☒ [a] REPLACEMENT ☐ [d]

6(H). ASME CODE STAMPED YES ☒ NO ☐

7. BRIEF DESCRIPTION OF REPAIR OR REPLACEMENT WORK PERFORMED.
Replaced BWR-4 CRD with modified BWR-6 CRD

8. TESTS CONDUCTED: HYDROSTATIC ☒ PNEUMATIC ☐
NOMINAL OPERATING PRESSURE ☐ OTHER ☐
PRESSURE 1158 PSI TEST TEMPERATURE 182 F°

9. REMARKS: Hydrostatic Test to be conducted during vessel hydro per 2-SI-3.3.1.B, REF. M.D. 90-08936-00J

( ) APPLICABLE MANUFACTURERS DATA REPORT [e] TO BE ATTACHED. M. Mayfa 7-3-91
RESPONSIBLE ENGR. [illegible] DATE 5/22/90
ORGANIZATION

ANII _____ DATE _____

* REF. CAQR# CHA-890003713

[a] SHEET NOS. FILLED IN BY TESTING AND DIAGNOSTIC PROGRAMS BRANCH.
[b] FOR WORK PERFORMED BY CERTIFICATE HOLDER
[c] REPLACED (LIKE OR EQUIVALENT).
[d] REPLACEMENT (MODIFICATION).
[e] WHEN REQUIRED BY CONSTRUCTION CODE.

RETENTION PERIOD: LIFETIME RESPONSIBLE ORGANIZATION: NM—PROCESSES/SPECIAL PROGRAMS

TENNESSEE VALLEY AUTHORITY
BROWNS FERRY NUCLEAR PLANT
SITE DIRECTOR STANDARD PRACTICE

SEP 22 1989

FORM PAGE 1 OF 1
FORM SDSP-403
SDSP 13.3

FORM SDSP-403
FORM NIS-2 ATTACHMENT

1. (OWNER) TENNESSEE VALLEY AUTHORITY
NUCLEAR POWER

DATE 5-18-90

2. (PLANT) BROWNS FERRY NUCLEAR PLANT
P.O. BOX 2000
DECATUR, ALABAMA

SHEET [a] 201 OF 255

MR# 795824

3. WORK PERFORMED BY: TVA (COMPANY)
P.O. Box 2000 (ADDRESS)
Decature, Alabama (CITY AND STATE)

TYPE CODE SYMBOL STAMP [b] NA
AUTHORIZATION NO. [b] NA
EXPIRATION DATE [b] NA

4. IDENTIFICATION OF SYSTEM SYS 85, Control Rod Drive

5(A). APPLICATION CONSTRUCTION CODE Section III 19 74
EDITION with ADDENDA 1975 CODE CASE NA

5(B). APPLICATION EDITION OF SECTION XI UTILIZED FOR REPAIRS OR REPLACEMENTS: 1980

6(A). NAME OF COMPONENT(S) AND DESCRIPTION (INCLUDE SIZE, CAPACITY, MATERIAL, AND LOCATION AS NEEDED TO AID IN IDENTIFICATION)
BWR-6 CRD from Hartsville modified by GE for use at BFNP BWR-4.

6(B). NAME OF MANUFACTURER GE
ADDRESS OF MANUFACTURER (IF KNOWN) UNKNOWN

6(c). MANUFACTURER'S SERIAL NUMBER A4816

6(D). NATIONAL BOARD NUMBER (IF APPLICABLE) N/A

6(E). OTHER IDENTIFICATION (SUBASSEMBLY NUMBER, HEAT NUMBER, ETC.)
2-CRD-85-[illegible] S/N - A4816

6(F). YEAR BUILT UNKNOWN CODE CLASS ☒ 1 ☐ 2

6(G). REPAIRED ☐ REPLACED ☒ [c] REPLACEMENT ☐ [d]

6(H). ASME CODE STAMPED YES ☒ NO ☐

7. BRIEF DESCRIPTION OF REPAIR OR REPLACEMENT WORK PERFORMED.
Replaced BWR-4 CRD with modified BWR-6 CRD

8. TESTS CONDUCTED: HYDROSTATIC ☒ PNEUMATIC ☐
NOMINAL OPERATING PRESSURE ☐ OTHER ☐
PRESSURE 1158 PSI TEST TEMPERATURE 182 F°

9. REMARKS: Hydrostatic Test to be conducted during vessel hydro per R-SI-3.3.1.B, REF. W.O. 90-08936-00 *

( ) APPLICABLE MANUFACTURER'S DATA REPORT • TO BE ATTACHED. M. Martin 7-3-91
RESPONSIBLE ENGR. Ernest J. Williams / Tech Spt DATE 5/18/90
ORGANIZATION

ANII _____ DATE _____

* REF. CAQR # CHA 890003713

[a] SHEET NOS. FILLED IN BY TESTING AND DIAGNOSTIC PROGRAMS BRANCH.
[b] FOR WORK PERFORMED BY CERTIFICATE HOLDER
[c] REPLACED (LIKE OR EQUIVALENT).
[d] REPLACEMENT (MODIFICATION).
• WHEN REQUIRED BY CONSTRUCTION CODE.

RETENTION PERIOD: LIFETIME RESPONSIBLE ORGANIZATION: NM-PROCESSES/SPECIAL PROGRAMS

TENNESSEE VALLEY AUTHORITY
BROWNS FERRY NUCLEAR PLANT
SITE DIRECTOR STANDARD PRACTICE

SEP 22 1999

FORM PAGE 1 OF 1
FORM SDSP-403
SDSP 13.3

FORM SDSP-403
FORM NIS-2 ATTACHMENT

1. (OWNER) TENNESSEE VALLEY AUTHORITY
NUCLEAR POWER — DATE 5-24-90

2. (PLANT) BROWNS FERRY NUCLEAR PLANT
P.O. BOX 2000
DECATUR, ALABAMA — SHEET [a] 202 OF 255

MR# 79-5825

3. WORK PERFORMED BY: TVA (COMPANY) — TYPE CODE SYMBOL STAMP [b] NA
P.O. Box 2000 (ADDRESS) — AUTHORIZATION NO. [b] NA
Decature, Alabama (CITY AND STATE) — EXPIRATION DATE [b] NA

4. IDENTIFICATION OF SYSTEM SYS 85, Control Rod Drive

5(A). APPLICATION CONSTRUCTION CODE Section III 19 74
EDITION with ADDENDA 1975 CODE CASE NA

5(B). APPLICATION EDITION OF SECTION XI UTILIZED FOR REPAIRS OR REPLACEMENTS: 1980

6(A). NAME OF COMPONENT(S) AND DESCRIPTION (INCLUDE SIZE, CAPACITY, MATERIAL, AND LOCATION AS NEEDED TO AID IN IDENTIFICATION)
BWR-6 CRD: from Hartsville modified by GE for use at BFNP BWR-4

6(B). NAME OF MANUFACTURER GE
ADDRESS OF MANUFACTURER (IF KNOWN) UNKNOWN

6(c). MANUFACTURER'S SERIAL NUMBER A5037

6(D). NATIONAL BOARD NUMBER (IF APPLICABLE) N/A

6(E). OTHER IDENTIFICATION (SUBASSEMBLY NUMBER, HEAT NUMBER, ETC.)
2-CRD-85-3897

6(F). YEAR BUILT UNKNOWN CODE CLASS ☒ 1 ☐ 2

6(G). REPAIRED ☐ REPLACED ☒ [c] REPLACEMENT ☐ [d]

6(H). ASME CODE STAMPED YES ☒ NO ☐

7. BRIEF DESCRIPTION OF REPAIR OR REPLACEMENT WORK PERFORMED.
Replaced BWR-4 CRD with modified BWR-6 CRD

8. TESTS CONDUCTED: HYDROSTATIC ☒ PNEUMATIC ☐
NOMINAL OPERATING PRESSURE ☐ OTHER ☐
PRESSURE 1158 PSI TEST TEMPERATURE 182 F°

9. REMARKS: Hydrostatic Test to be conducted during vessel hydro per R-SE-3.3.1.B, REF W.O. 90-08936-00 ✓

( ) APPLICABLE MANUFACTURERS DATA REPORT [e] TO BE ATTACHED.
RESPONSIBLE ENGR. M. Martin 7-3-91 DATE 5/24/90
ORGANIZATION ✓ Ernst & Williams Tech Svc
ANII _____ DATE _____

✓ REF. CAQR # CHA890003713

[a] SHEET NOS. FILLED IN BY TESTING AND DIAGNOSTIC PROGRAMS BRANCH.
[b] FOR WORK PERFORMED BY CERTIFICATE HOLDER
[c] REPLACED (LIKE OR EQUIVALENT).
[d] REPLACEMENT (MODIFICATION).
[e] WHEN REQUIRED BY CONSTRUCTION CODE.

RETENTION PERIOD: LIFETIME RESPONSIBLE ORGANIZATION: NM—PROCESSES/SPECIAL PROGRAMS

TENNESSEE VALLEY AUTHORITY
BROWNS FERRY NUCLEAR PLANT
SITE DIRECTOR STANDARD PRACTICE

SEP 22 1989

FORM PAGE 1 OF 1
FORM SDSP-403
SDSP 13.3

FORM SDSP-403
FORM NIS-2 ATTACHMENT

1. (OWNER) TENNESSEE VALLEY AUTHORITY
NUCLEAR POWER

DATE 5-22-90

2. (PLANT) BROWNS FERRY NUCLEAR PLANT
P.O. BOX 2000
DECATUR, ALABAMA

SHEET [a] 203 OF 255

MR# 715826

3. WORK PERFORMED BY: TVA (COMPANY)
P.O. Box 2000 (ADDRESS)
Decature, Alabama (CITY AND STATE)

TYPE CODE SYMBOL STAMP [b] NA
AUTHORIZATION NO. [b] NA
EXPIRATION DATE [b] NA

4. IDENTIFICATION OF SYSTEM SYS 85, Control Rod Drive

5(A). APPLICATION CONSTRUCTION CODE Section III : 19 74
EDITION with ADDENDA 1975 CODE CASE NA

5(B). APPLICATION EDITION OF SECTION XI UTILIZED FOR REPAIRS OR REPLACEMENTS: 1980

6(A). NAME OF COMPONENT(S) AND DESCRIPTION (INCLUDE SIZE, CAPACITY, MATERIAL, AND LOCATION AS NEEDED TO AID IN IDENTIFICATION)
BWR-6 CRD from Hartsville modified by GE for use at BFNP BWR-4

6(B). NAME OF MANUFACTURER GE
ADDRESS OF MANUFACTURER (IF KNOWN) UNKNOWN

6(c). MANUFACTURER'S SERIAL NUMBER A5660

6(D). NATIONAL BOARD NUMBER (IF APPLICABLE) N/A

6(E). OTHER IDENTIFICATION (SUBASSEMBLY NUMBER, HEAT NUMBER, ETC.)
2-CRD-85-1825

6(F). YEAR BUILT UNKNOWN CODE CLASS ☒ 1 ☐ 2

6(G). REPAIRED ☐ REPLACED ☒ [c] REPLACEMENT ☐ [d]

6(H). ASME CODE STAMPED YES ☒ NO ☐

7. BRIEF DESCRIPTION OF REPAIR OR REPLACEMENT WORK PERFORMED.
Replaced BWR-4 CRD with modified BWR-6 CRD

8. TESTS CONDUCTED: HYDROSTATIC ☒ PNEUMATIC ☐
NOMINAL OPERATING PRESSURE ☐ OTHER ☐
PRESSURE 1158 PSI TEST TEMPERATURE 182 F°

9. REMARKS: Hydrostatic Test - to be conducted during vessel hydro per A-SI-3.3.1.B, REF. W.O. 90-08936-00 *

( ) APPLICABLE MANUFACTURERS DATA REPORT [e] TO BE ATTACHED.
RESPONSIBLE ENGR. Ernest L. Williams / Tech Spt. DATE 5/22/90 M. Manton 7-3-91
ORGANIZATION
ANII _____ DATE _____

* REF. CAQR# CHA 890003713

[a] SHEET NOS. FILLED IN BY TESTING AND DIAGNOSTIC PROGRAMS BRANCH.
[b] FOR WORK PERFORMED BY CERTIFICATE HOLDER
[c] REPLACED (LIKE OR EQUIVALENT).
[d] REPLACEMENT (MODIFICATION).
[e] WHEN REQUIRED BY CONSTRUCTION CODE.

RETENTION PERIOD: LIFETIME T RESPONSIBLE ORGANIZATION: NM-PROCESSES/SPECIAL PROGRAMS

TENNESSEE VALLEY AUTHORITY
BROWNS FERRY NUCLEAR PLANT
SITE DIRECTOR STANDARD PRACTICE

SEP 22 1989

FORM PAGE 1 OF 1
FORM SDSP-403
SDSP 13.3

FORM SDSP-403
FORM NIS-2 ATTACHMENT

1. (OWNER) TENNESSEE VALLEY AUTHORITY
NUCLEAR POWER

DATE 5-24-90

2. (PLANT) BROWNS FERRY NUCLEAR PLANT
P.O. BOX 2000
DECATUR, ALABAMA

SHEET [a] 204 OF 255

MR# 795827

3. WORK PERFORMED BY: TVA
COMPANY

TYPE CODE SYMBOL STAMP [b] NA

P.O. Box 2000
ADDRESS

AUTHORIZATION NO. [b] NA

Decature, Alabama
CITY AND STATE

EXPIRATION DATE [b] NA

4. IDENTIFICATION OF SYSTEM SYS 85, Control Rod Drive

5(A). APPLICATION CONSTRUCTION CODE Section III 19 74
EDITION with ADDENDA 1975 CODE CASE NA

5(B). APPLICATION EDITION OF SECTION XI UTILIZED FOR REPAIRS OR REPLACEMENTS: 1980

6(A). NAME OF COMPONENT(S) AND DESCRIPTION (INCLUDE SIZE, CAPACITY, MATERIAL, AND LOCATION AS NEEDED TO AID IN IDENTIFICATION)
BWR-6 CRD from Hartsville modified by GE for use at BFNP BWR-4

6(B). NAME OF MANUFACTURER GE
ADDRESS OF MANUFACTURER (IF KNOWN) UNKNOWN

6(c). MANUFACTURER'S SERIAL NUMBER A5023

6(D). NATIONAL BOARD NUMBER (IF APPLICABLE) N/A

6(E). OTHER IDENTIFICATION (SUBASSEMBLY NUMBER, HEAT NUMBER, ETC.)
2-CRD-85-4207

6(F). YEAR BUILT UNKNOWN CODE CLASS ☒ 1 ☐ 2

6(G). REPAIRED ☐ REPLACED ☒ [c] REPLACEMENT ☐ [d]

6(H). ASME CODE STAMPED YES ☒ NO ☐

7. BRIEF DESCRIPTION OF REPAIR OR REPLACEMENT WORK PERFORMED.
Replaced BWR-4 CRD with modified BWR-6 CRD

8. TESTS CONDUCTED: HYDROSTATIC ☒ PNEUMATIC ☐
NOMINAL OPERATING PRESSURE ☐ OTHER ☐
PRESSURE 1158 PSI TEST TEMPERATURE 182 F°

9. REMARKS: Hydrostatic Test to be conducted during vessel hydro per 2-SI-2.2.1.B. REF. W.O. 90-08936-00J

( ) APPLICABLE MANUFACTURERS DATA REPORT [e] TO BE ATTACHED.
RESPONSIBLE ENGR. Ernest L. Williams Tech Spt. * DATE 5/24/90
ORGANIZATION

M. Maynor 7-3-91

ANII _____ DATE _____

* REF. CAQR# CHA890003713.

[a] SHEET NOS. FILLED IN BY TESTING AND DIAGNOSTIC PROGRAMS BRANCH.
[b] FOR WORK PERFORMED BY CERTIFICATE HOLDER
[c] REPLACED (LIKE OR EQUIVALENT).
[d] REPLACEMENT (MODIFICATION).
[e] WHEN REQUIRED BY CONSTRUCTION CODE.

RETENTION PERIOD: LIFETIME RESPONSIBLE ORGANIZATION: NM-PROCESSES/SPECIAL PROGRAMS

TENNESSEE VALLEY AUTHORITY
BROWNS FERRY NUCLEAR PLANT
SITE DIRECTOR STANDARD PRACTICE

SEP 22 1989

FORM PAGE 1 OF 1
FORM SDSP-403
SDSP 13.3

FORM SDSP-403
FORM NIS-2 ATTACHMENT

1. (OWNER) TENNESSEE VALLEY AUTHORITY
NUCLEAR POWER

DATE 5-22-90

2. (PLANT) BROWNS FERRY NUCLEAR PLANT
P.O. BOX 2000
DECATUR, ALABAMA

SHEET [a] 205 OF 255

MR# 795828

3. WORK PERFORMED BY: TVA
COMPANY

TYPE CODE SYMBOL STAMP [b] NA

P.O. Box 2000
ADDRESS

AUTHORIZATION NO. [b] NA

Decature, Alabama
CITY AND STATE

EXPIRATION DATE [b] NA

4. IDENTIFICATION OF SYSTEM SYS 85, Control Rod Drive

5(A). APPLICATION CONSTRUCTION CODE Section III 19 74
EDITION with ADDENDA 1975 CODE CASE NA

5(B). APPLICATION EDITION OF SECTION XI UTILIZED FOR REPAIRS OR REPLACEMENTS: 1980

6(A). NAME OF COMPONENT(S) AND DESCRIPTION (INCLUDE SIZE, CAPACITY, MATERIAL, AND LOCATION AS NEEDED TO AID IN IDENTIFICATION)
BWR-6 CRD from Hartsville modified by GE for use at BFNP BWR-4

6(B). NAME OF MANUFACTURER GE
ADDRESS OF MANUFACTURER (IF KNOWN) UNKNOWN

6(c). MANUFACTURER'S SERIAL NUMBER A5077

6(D). NATIONAL BOARD NUMBER (IF APPLICABLE) N/A

6(E). OTHER IDENTIFICATION (SUBASSEMBLY NUMBER, HEAT NUMBER, ETC.)
2-CRD-85-4211

6(F). YEAR BUILT UNKNOWN CODE CLASS ☒ 1 ☐ 2

6(G). REPAIRED ☐ REPLACED ☒ [c] REPLACEMENT ☐ [d]

6(H). ASME CODE STAMPED YES ☒ NO ☐

7. BRIEF DESCRIPTION OF REPAIR OR REPLACEMENT WORK PERFORMED:
Replaced BWR-4 CRD with modified BWR-6 CRD

8. TESTS CONDUCTED: HYDROSTATIC ☒ PNEUMATIC ☐
NOMINAL OPERATING PRESSURE ☐ OTHER ☐
PRESSURE 1158 PSI TEST TEMPERATURE 182 F[e]

9. REMARKS: Hydrostatic Test - to be conducted during vessel hydro per R-SE-3.3.1.B. REF. W.O. 90-08936-00 ✓

( ) APPLICABLE MANUFACTURERS DATA REPORT TO BE ATTACHED.

RESPONSIBLE ENGR. Ernest L. Williams Tech. 3 M. Martin 7-3-91 DATE 5/22/90
ORGANIZATION

ANII ✗ DATE

✗ REF. CAQR# CHA 890003713

[a] SHEET NOS. FILLED IN BY TESTING AND DIAGNOSTIC PROGRAMS BRANCH.
[b] FOR WORK PERFORMED BY CERTIFICATE HOLDER
[c] REPLACED (LIKE OR EQUIVALENT).
[d] REPLACEMENT (MODIFICATION).
[e] WHEN REQUIRED BY CONSTRUCTION CODE.

RETENTION PERIOD: LIFETIME RESPONSIBLE ORGANIZATION: NM-PROCESSES/SPECIAL PROGRAMS

TENNESSEE VALLEY AUTHORITY
BROWNS FERRY NUCLEAR PLANT
SITE DIRECTOR STANDARD PRACTICE

SEP 22 1989

FORM PAGE 1 OF 1
FORM SDSP-403
SDSP 13.3

FORM SDSP-403
FORM NIS-2 ATTACHMENT

1. (OWNER) TENNESSEE VALLEY AUTHORITY
NUCLEAR POWER

DATE 5-18-90

2. (PLANT) BROWNS FERRY NUCLEAR PLANT
P.O. BOX 2000
DECATUR, ALABAMA

SHEET [a] 206 OF 255

MR# 795829

3. WORK PERFORMED BY: TVA (COMPANY)
P.O. Box 2000 (ADDRESS)
Decature, Alabama (CITY AND STATE)

TYPE CODE SYMBOL STAMP [b] NA
AUTHORIZATION NO. [b] NA
EXPIRATION DATE [b] NA

4. IDENTIFICATION OF SYSTEM SYS 85, Control Rod Drive

5(A). APPLICATION CONSTRUCTION CODE Section III 19 74
EDITION with ADDENDA 1975 CODE CASE NA

5(B). APPLICATION EDITION OF SECTION XI UTILIZED FOR REPAIRS OR REPLACEMENTS: 1980

6(A). NAME OF COMPONENT(S) AND DESCRIPTION (INCLUDE SIZE, CAPACITY, MATERIAL, AND LOCATION AS NEEDED TO AID IN IDENTIFICATION)
BWR-6 CRD from Hartsville modified by GE for use at BFNP BWR-4

6(B). NAME OF MANUFACTURER GE
ADDRESS OF MANUFACTURER (IF KNOWN) UNKNOWN

6(C). MANUFACTURER'S SERIAL NUMBER A4780

6(D). NATIONAL BOARD NUMBER (IF APPLICABLE) N/A

6(E). OTHER IDENTIFICATION (SUBASSEMBLY NUMBER, HEAT NUMBER, ETC.)
2-CRD-85-4319 S/N-A4780

6(F). YEAR BUILT UNKNOWN CODE CLASS ☒ 1 ☐ 2

6(G). REPAIRED ☐ REPLACED ☒ [c] REPLACEMENT ☐ [d]

6(H). ASME CODE STAMPED YES ☒ NO ☐

7. BRIEF DESCRIPTION OF REPAIR OR REPLACEMENT WORK PERFORMED.
Replaced BWR-4 CRD with modified BWR-6 CRD

8. TESTS CONDUCTED: HYDROSTATIC ☒ PNEUMATIC ☐
NOMINAL OPERATING PRESSURE ☐ OTHER ☐
PRESSURE 1158 PSI TEST TEMPERATURE 182 F°

9. REMARKS: Hydrostatic Test to be conducted during vessel hydro per 2-SI-3.3.1.A. REF. W.O. 90-08936-00J

( ) APPLICABLE MANUFACTURERS DATA REPORT [e] TO BE ATTACHED.

RESPONSIBLE ENGR. M. Martin 7-3-91
Smith Williams Tech Inc. DATE 5/18/90
ORGANIZATION

ANII _____ DATE _____

* REF. CAQR# CHA 890003713

[a] SHEET NOS. FILLED IN BY TESTING AND DIAGNOSTIC PROGRAMS BRANCH.
[b] FOR WORK PERFORMED BY CERTIFICATE HOLDER
[c] REPLACED (LIKE OR EQUIVALENT).
[d] REPLACEMENT (MODIFICATION).
[e] WHEN REQUIRED BY CONSTRUCTION CODE.

RETENTION PERIOD: LIFETIME* RESPONSIBLE ORGANIZATION: NM-PROCESSES/SPECIAL PROGRAMS

TENNESSEE VALLEY AUTHORITY
BROWNS FERRY NUCLEAR PLANT
SITE DIRECTOR STANDARD PRACTICE

SEP 22 1989

FORM PAGE 1 OF 1
FORM SDSP-403
SDSP 13.3

FORM SDSP-403
FORM NIS-2 ATTACHMENT

1. (OWNER) TENNESSEE VALLEY AUTHORITY
NUCLEAR POWER

DATE 5-22-90

2. (PLANT) BROWNS FERRY NUCLEAR PLANT
P.O. BOX 2000
DECATUR, ALABAMA

SHEET [a] 207 OF 255

MR# 795830

3. WORK PERFORMED BY: TVA (COMPANY)
P.O. Box 2000 (ADDRESS)
Decature, Alabama (CITY AND STATE)

TYPE CODE SYMBOL STAMP [b] NA
AUTHORIZATION NO. [b] NA
EXPIRATION DATE [b] NA

4. IDENTIFICATION OF SYSTEM SYS 85, Control Rod Drive

5(A). APPLICATION CONSTRUCTION CODE Section III 19 74
EDITION with ADDENDA 1975 CODE CASE NA

5(B). APPLICATION EDITION OF SECTION XI UTILIZED FOR REPAIRS OR REPLACEMENTS: 1980

6(A). NAME OF COMPONENT(S) AND DESCRIPTION (INCLUDE SIZE, CAPACITY, MATERIAL, AND LOCATION AS NEEDED TO AID IN IDENTIFICATION)
BWR-6 CRD from Hartsville modified by GE for use at BFNP BWR-4

6(B). NAME OF MANUFACTURER GE
ADDRESS OF MANUFACTURER (IF KNOWN) UNKNOWN

6(C). MANUFACTURER'S SERIAL NUMBER A5310

6(D). NATIONAL BOARD NUMBER (IF APPLICABLE) N/A

6(E). OTHER IDENTIFICATION (SUBASSEMBLY NUMBER, HEAT NUMBER, ETC.)
2-CRD-85-5047

6(F). YEAR BUILT UNKNOWN CODE CLASS [X] 1 [ ] 2

6(G). REPAIRED [ ] REPLACED [X] [c] REPLACEMENT [ ] [d]

6(H). ASME CODE STAMPED YES [X] NO [ ]

7. BRIEF DESCRIPTION OF REPAIR OR REPLACEMENT WORK PERFORMED.
Replaced BWR-4 CRD with modified BWR-6 CRD

8. TESTS CONDUCTED: HYDROSTATIC [X] PNEUMATIC [ ]
NOMINAL OPERATING PRESSURE [ ] OTHER [ ]
PRESSURE 1158 PSI TEST TEMPERATURE 182 F°

9. REMARKS: Hydrostatic Test to be conducted during vessel hydro per A-SE-2.2.1.B, REP. N.O. 90-08936-00 *

( ) APPLICABLE MANUFACTURERS DATA REPORT [e] TO BE ATTACHED. M. Martin 7-3-91
RESPONSIBLE ENGR. Emil L. Williams Jr. DATE 5/22/90
ORGANIZATION *

ANII _____ DATE _____

* REF CARR# CHA 89 0003713

[a] SHEET NOS. FILLED IN BY TESTING AND DIAGNOSTIC PROGRAMS BRANCH.
[b] FOR WORK PERFORMED BY CERTIFICATE HOLDER
[c] REPLACED (LIKE OR EQUIVALENT).
[d] REPLACEMENT (MODIFICATION).
[e] WHEN REQUIRED BY CONSTRUCTION CODE.

RETENTION PERIOD: LIFETIME RESPONSIBLE ORGANIZATION: M-PROCESSES/SPECIAL PROGRAMS

TENNESSEE VALLEY AUTHORITY
BROWNS FERRY NUCLEAR PLANT
SITE DIRECTOR STANDARD PRACTICE

SEP 22 1989

FORM PAGE 1 OF 1
FORM SDSP-403
SDSP 13.3

FORM SDSP-403
FORM NIS-2 ATTACHMENT

1. (OWNER) TENNESSEE VALLEY AUTHORITY
NUCLEAR POWER
DATE 5-18-90

2. (PLANT) BROWNS FERRY NUCLEAR PLANT
P.O. BOX 2000
DECATUR, ALABAMA
SHEET [a] 208 OF 255
MRH 795831

3. WORK PERFORMED BY: TVA (COMPANY)
TYPE CODE SYMBOL STAMP [b] NA
P.O. Box 2000 (ADDRESS)
AUTHORIZATION NO. [b] NA
Decature, Alabama (CITY AND STATE)
EXPIRATION DATE [b] NA

4. IDENTIFICATION OF SYSTEM SYS 85, Control Rod Drive

5(A). APPLICATION CONSTRUCTION CODE Section III 19 74
EDITION with ADDENDA 1975 CODE CASE NA

5(B). APPLICATION EDITION OF SECTION XI UTILIZED FOR REPAIRS OR REPLACEMENTS: 1980

6(A). NAME OF COMPONENT(S) AND DESCRIPTION (INCLUDE SIZE, CAPACITY, MATERIAL, AND LOCATION AS NEEDED TO AID IN IDENTIFICATION)
BWR-6 CRD from Hartsville modified by GE for use at BFNP BWR-4

6(B). NAME OF MANUFACTURER GE
ADDRESS OF MANUFACTURER (IF KNOWN) UNKNOWN

6(C). MANUFACTURER'S SERIAL NUMBER A5320

6(D). NATIONAL BOARD NUMBER (IF APPLICABLE) N/A

6(E). OTHER IDENTIFICATION (SUBASSEMBLY NUMBER, HEAT NUMBER, ETC.)
2-CRD-85-795831 S/N A5320

6(F). YEAR BUILT UNKNOWN CODE CLASS ☒ 1 ☐ 2

6(G). REPAIRED ☐ REPLACED ☒ [c] REPLACEMENT ☐ [d]

6(H). ASME CODE STAMPED YES ☒ NO ☐

7. BRIEF DESCRIPTION OF REPAIR OR REPLACEMENT WORK PERFORMED.
Replaced BWR-4 CRD with modified BWR-6 CRD

8. TESTS CONDUCTED: HYDROSTATIC ☒ PNEUMATIC ☐
NOMINAL OPERATING PRESSURE ☐ OTHER ☐
PRESSURE 1158 PSI TEST TEMPERATURE 182 F°

9. REMARKS: Hydrostatic Test to be conducted during vessel hydro per A-SI-2.2.1.B. REF. W.O. 40-08936-00

( ) APPLICABLE MANUFACTURERS DATA REPORT [e] TO BE ATTACHED
RESPONSIBLE ENGR. * Ernest L. Wallace Tech Spec DATE 5/18/90 M. Manton 7-3-91
ORGANIZATION
ANII DATE

* REF. CAQR # CHA 890003713.

[a] SHEET NOS. FILLED IN BY TESTING AND DIAGNOSTIC PROGRAMS BRANCH.
[b] FOR WORK PERFORMED BY CERTIFICATE HOLDER
[c] REPLACED (LIKE OR EQUIVALENT).
[d] REPLACEMENT (MODIFICATION).
[e] WHEN REQUIRED BY CONSTRUCTION CODE.

RETENTION PERIOD: LIFETIME RESPONSIBLE ORGANIZATION: NM-PROCESS/SPECIAL PROGRAMS

TENNESSEE VALLEY AUTHORITY
BROWNS FERRY NUCLEAR PLANT
SITE DIRECTOR STANDARD PRACTICE

SEP 22 1989

FORM PAGE 1 OF 1
FORM SDSP-403
SDSP 13.3.

FORM SDSP-403
FORM NIS-2 ATTACHMENT

1. (OWNER) TENNESSEE VALLEY AUTHORITY
NUCLEAR POWER

DATE 5-22-90

2. (PLANT) BROWNS FERRY NUCLEAR PLANT
P.O. BOX 2000
DECATUR, ALABAMA

SHEET [a] 209 OF 255

MR# 795832

3. WORK PERFORMED BY: TVA (COMPANY)
P.O. Box 2000 (ADDRESS)
Decature, Alabama (CITY AND STATE)

TYPE CODE SYMBOL STAMP [b] NA
AUTHORIZATION NO. [b] NA
EXPIRATION DATE [b] NA

4. IDENTIFICATION OF SYSTEM SYS 85, Control Rod Drive

5(A). APPLICATION CONSTRUCTION CODE Section III 19 74
EDITION with ADDENDA 1975 CODE CASE NA

5(B). APPLICATION EDITION OF SECTION XI UTILIZED FOR REPAIRS OR REPLACEMENTS: 1980

6(A). NAME OF COMPONENT(S) AND DESCRIPTION (INCLUDE SIZE, CAPACITY, MATERIAL, AND LOCATION AS NEEDED TO AID IN IDENTIFICATION)
BWR-6 CRD from Hartsville modified by GE for use at BFNP BWR-4

6(B). NAME OF MANUFACTURER GE
ADDRESS OF MANUFACTURER (IF KNOWN) UNKNOWN

6(C). MANUFACTURER'S SERIAL NUMBER A5624 BWR-6

6(D). NATIONAL BOARD NUMBER (IF APPLICABLE) N/A

6(E). OTHER IDENTIFICATION (SUBASSEMBLY NUMBER, HEAT NUMBER, ETC.)
2-CRD-85-15443

6(F). YEAR BUILT UNKNOWN. CODE CLASS ☒ 1 ☐ 2

6(G). REPAIRED ☐ REPLACED ☒ [c] REPLACEMENT ☐ [d]

6(H). ASME CODE STAMPED YES ☒ NO ☐

7. BRIEF DESCRIPTION OF REPAIR OR REPLACEMENT WORK PERFORMED.
Replaced BWR-4 CRD with modified BWR-6 CRD

8. TESTS CONDUCTED: HYDROSTATIC ☒ PNEUMATIC ☐
NOMINAL OPERATING PRESSURE ☐ OTHER ☐
PRESSURE 1158 PSI TEST TEMPERATURE 182 F°

9. REMARKS: Hydrostatic Test to be conducted during vessel hydro per R-SE-3.3.1.B. REF. W.O. 90-08936-00

( ) APPLICABLE MANUFACTURERS DATA REPORTS [e] TO BE ATTACHED. M. Martin 7-3-91
RESPONSIBLE ENGR. E. W. Williams / Tech Spec DATE 5/22/90
ORGANIZATION
ANII _____ DATE _____

* REF CAQR# CHA 89000 3713

[a] SHEET NOS. FILLED IN BY TESTING AND DIAGNOSTIC PROGRAMS BRANCH.
[b] FOR WORK PERFORMED BY CERTIFICATE HOLDER
[c] REPLACED (LIKE OR EQUIVALENT).
[d] REPLACEMENT (MODIFICATION).
[e] WHEN REQUIRED BY CONSTRUCTION CODE.

RETENTION PERIOD: LIFETIME RESPONSIBLE ORGANIZATION: NM-PROCESSES/SPECIAL PROGRAMS

FORM SDSP-403
FORM NIS-2 ATTACHMENT

1. (OWNER) TENNESSEE VALLEY AUTHORITY
NUCLEAR POWER

DATE 11-21-90

2. (PLANT) BROWNS FERRY NUCLEAR PLANT
P.O. BOX 2000
DECATUR, ALABAMA

SHEET[a] 210 of 255

MR# 795882

3. WORK PERFORMED BY: TVA
COMPANY

P.O. BOX 2000
ADDRESS

DECATUR, ALABAMA
CITY AND STATE

TYPE CODE SYMBOL STAMP[b] N/A

AUTHORIZATION NO.[b] N/A

EXPIRATION DATE[b] N/A

4. IDENTIFICATION OF SYSTEM SYSTEM 01/MAIN STEAM

5(A). APPLICATION CONSTRUCTION CODE USAS B31.1.0 19 67
EDITION THRU ADDENDA N/A CODE CASE N/A

5(B). APPLICATION EDITION OF SECTION XI UTILIZED FOR REPAIRS OR REPLACEMENTS: 1980

6(A). NAME OF COMPONENT(S) AND DESCRIPTION (INCLUDE SIZE,-CAPACITY, MATERIAL, AND LOCATION AS NEEDED TO AID IN IDENTIFICATION)
REPAIR WELDS ON LUGS FOR 24" MAIN STEAM LINE.

6(B). NAME OF MANUFACTURER TENNESSEE VALLEY AUTHORITY
ADDRESS OF MANUFACTURER (IF KNOWN) P. O. BOX 2000, DECATUR, ALABAMA

6(C). MANUFACTURER'S SERIAL NUMBER N/A

6(D). NATIONAL BOARD NUMBER (IF APPLICABLE) N/A

6(E). OTHER IDENTIFICATION (SUBASSEMBLY NUMBER, HEAT NUMBER, ETC.) N/A

6(F). YEAR BUILT N/A CODE CLASS [ ] 1 [X] 2

6(G). REPAIRED [X] REPLACED [ ][c] REPLACEMENT [ ][d]

6(H). ASME CODE STAMPED YES [ ] NO [X]

7. BRIEF DESCRIPTION OF REPAIR OR REPLACEMENT WORK PERFORMED
REPAIRED WELDS ON LUGS FOR 24" MAIN STEAM LINE

8. TESTS CONDUCTED: HYDROSTATIC [ ] PNEUMATIC [ ]
NOMINAL OPERATING PRESSURE [ ] OTHER [ ]
PRESSURE N/A PSI TEST TEMPERATURE ____ F°

9. REMARKS: WELDS REPAIRED IN ACCORDANCE WITH WORK ORDER # MR 795882

( )APPLICABLE MANUFACTURERS DATA REPORT[e] TO BE ATTACHED.

RESPONSIBLE ENGR. Jeffery W. Jones / MODS DATE 1-9-91
ORGANIZATION

ANII R. Russell Jr. DATE 1-9-91

[a]SHEET NOS. FILLED IN BY TESTING AND DIAGNOSTIC PROGRAMS BRANCH.
[b]FOR WORK PERFORMED BY CERTIFICATE HOLDER
[c]REPLACED (LIKE OR EQUIVALENT).
[d]REPLACEMENT (MODIFICATION).
[e]WHEN REQUIRED BY CONSTRUCTION CODE.

RETENTION PERIOD: LIFETIME RESPONSIBLE ORGANIZATION: NM-PROCESSES/SPECIAL PROGRAMS

DTN # 89-00304

FORM SDSP-403
FORM NIS-2 ATTACHMENT

1. (OWNER) TENNESSEE VALLEY AUTHORITY
NUCLEAR POWER

DATE 11-21-90

2. (PLANT) BROWNS FERRY NUCLEAR PLANT
P.O. BOX 2000
DECATUR, ALABAMA

SHEET[a] 211 of 255

MR# 795883

3. WORK PERFORMED BY: TVA
COMPANY

P.O. BOX 2000
ADDRESS

DECATUR, ALABAMA
CITY AND STATE

TYPE CODE SYMBOL STAMP[b] N/A

AUTHORIZATION NO.[b] N/A

EXPIRATION DATE[b] N/A

4. IDENTIFICATION OF SYSTEM SYSTEM 01/MAIN STEAM

5(A). APPLICATION CONSTRUCTION CODE USAS B31.1.0 19 67
EDITION THRU ADDENDA N/A CODE CASE N/A

5(B). APPLICATION EDITION OF SECTION XI UTILIZED FOR REPAIRS OR REPLACEMENTS: 1980

6(A). NAME OF COMPONENT(S) AND DESCRIPTION (INCLUDE SIZE, CAPACITY, MATERIAL, AND LOCATION AS NEEDED TO AID IN IDENTIFICATION)
REPAIR WELDS ON LUGS FOR 24" MAIN STEAM LINE.

6(B). NAME OF MANUFACTURER TENNESSEE VALLEY AUTHORITY
ADDRESS OF MANUFACTURER (IF KNOWN) P. O. BOX 2000, DECATUR, ALABAMA

6(C). MANUFACTURER'S SERIAL NUMBER N/A

6(D). NATIONAL BOARD NUMBER (IF APPLICABLE) N/A

6(E). OTHER IDENTIFICATION (SUBASSEMBLY NUMBER, HEAT NUMBER, ETC.) N/A

6(F). YEAR BUILT N/A CODE CLASS [ ] 1 [X] 2

6(G). REPAIRED [X] REPLACED [ ][c] REPLACEMENT [ ][d]

6(H). ASME CODE STAMPED YES [ ] NO [X]

7. BRIEF DESCRIPTION OF REPAIR OR REPLACEMENT WORK PERFORMED
REPAIRED WELDS ON LUGS FOR 24" MAIN STEAM LINE

8. TESTS CONDUCTED: HYDROSTATIC [ ] PNEUMATIC [ ]
NOMINAL OPERATING PRESSURE [ ] OTHER [ ]
PRESSURE N/A PSI TEST TEMPERATURE ____ F°

9. REMARKS: WELDS REPAIRED IN ACCORDANCE WITH WORK ORDER # MR A795883

( )APPLICABLE MANUFACTURERS DATA REPORT[e] TO BE ATTACHED.

RESPONSIBLE ENGR. Jeffery W. Jones / MONS DATE 1-9-91
ORGANIZATION

ANII R. Russell Jr. DATE 1-9-91

[a]SHEET NOS. FILLED IN BY TESTING AND DIAGNOSTIC PROGRAMS BRANCH.
[b]FOR WORK PERFORMED BY CERTIFICATE HOLDER
[c]REPLACED (LIKE OR EQUIVALENT).
[d]REPLACEMENT (MODIFICATION).
[e]WHEN REQUIRED BY CONSTRUCTION CODE.

RETENTION PERIOD: LIFETIME RESPONSIBLE ORGANIZATION: NM-PROCESSES/SPECIAL PROGRAMS

FORM SDSP-403
FORM NIS-2 ATTACHMENT

1. (OWNER) TENNESSEE VALLEY AUTHORITY
NUCLEAR POWER

DATE 11-21-90

2. (PLANT) BROWNS FERRY NUCLEAR PLANT
P.O. BOX 2000
DECATUR, ALABAMA

SHEET[a] 212 of 255

MR # 795885

3. WORK PERFORMED BY: TVA
COMPANY

P.O. BOX 2000
ADDRESS

DECATUR, ALABAMA
CITY AND STATE

TYPE CODE SYMBOL STAMP[b] N/A

AUTHORIZATION NO.[b] N/A

EXPIRATION DATE[b] N/A

4. IDENTIFICATION OF SYSTEM SYSTEM 01/MAIN STEAM

5(A). APPLICATION CONSTRUCTION CODE USAS B31.1.0 19 67
EDITION THRU ADDENDA N/A CODE CASE N/A

5(B). APPLICATION EDITION OF SECTION XI UTILIZED FOR REPAIRS OR REPLACEMENTS: 1980

6(A). NAME OF COMPONENT(S) AND DESCRIPTION (INCLUDE SIZE, CAPACITY, MATERIAL, AND LOCATION AS NEEDED TO AID IN IDENTIFICATION)
REPAIR WELDS ON LUGS FOR 24" MAIN STEAM LINE.

6(B). NAME OF MANUFACTURER TENNESSEE VALLEY AUTHORITY
ADDRESS OF MANUFACTURER (IF KNOWN) P. O. BOX 2000, DECATUR, ALABAMA

6(C). MANUFACTURER'S SERIAL NUMBER N/A

6(D). NATIONAL BOARD NUMBER (IF APPLICABLE) N/A

6(E). OTHER IDENTIFICATION (SUBASSEMBLY NUMBER, HEAT NUMBER, ETC.) N/A

6(F). YEAR BUILT N/A CODE CLASS [ ] 1 [X] 2

6(G). REPAIRED [X] REPLACED [ ][c] REPLACEMENT [ ][d]

6(H). ASME CODE STAMPED YES [ ] NO [X]

7. BRIEF DESCRIPTION OF REPAIR OR REPLACEMENT WORK PERFORMED
REPAIRED WELDS ON LUGS FOR 24" MAIN STEAM LINE

8. TESTS CONDUCTED: HYDROSTATIC [ ] PNEUMATIC [ ]
NOMINAL OPERATING PRESSURE [ ] OTHER [ ]
PRESSURE N/A PSI TEST TEMPERATURE F°

9. REMARKS: WELDS REPAIRED IN ACCORDANCE WITH WORK ORDER # MR A795885

( )APPLICABLE MANUFACTURERS DATA REPORT[e] TO BE ATTACHED.

RESPONSIBLE ENGR. Jeffery W. Jones / MADS DATE 1-9-91
ORGANIZATION

ANII R. Russell / Pr DATE 1-10-91

[a]SHEET NOS. FILLED IN BY TESTING AND DIAGNOSTIC PROGRAMS BRANCH.
[b]FOR WORK PERFORMED BY CERTIFICATE HOLDER
[c]REPLACED (LIKE OR EQUIVALENT).
[d]REPLACEMENT (MODIFICATION).
[e]WHEN REQUIRED BY CONSTRUCTION CODE.

RETENTION PERIOD: LIFETIME RESPONSIBLE ORGANIZATION: NM-PROCESSES/SPECIAL PROGRAMS

DWB 11-21-90

FORM SDSP-403
FORM NIS-2 ATTACHMENT

1. (OWNER) TENNESSEE VALLEY AUTHORITY
NUCLEAR POWER

DATE 11-21-90

2. (PLANT) BROWNS FERRY NUCLEAR PLANT
P.O. BOX 2000
DECATUR, ALABAMA

SHEET[a] 213 of 255

MR# 795886

3. WORK PERFORMED BY: TVA
COMPANY

P.O. BOX 2000
ADDRESS

DECATUR, ALABAMA
CITY AND STATE

TYPE CODE SYMBOL STAMP[b] N/A

AUTHORIZATION NO.[b] N/A

EXPIRATION DATE[b] N/A

4. IDENTIFICATION OF SYSTEM SYSTEM 01/MAIN STEAM

5(A). APPLICATION CONSTRUCTION CODE USAS B31.1.0 19 67
EDITION THRU ADDENDA N/A CODE CASE N/A

5(B). APPLICATION EDITION OF SECTION XI UTILIZED FOR REPAIRS OR REPLACEMENTS: 1980

6(A). NAME OF COMPONENT(S) AND DESCRIPTION (INCLUDE SIZE, CAPACITY, MATERIAL, AND LOCATION AS NEEDED TO AID IN IDENTIFICATION)
REPAIR WELDS ON LUGS FOR 24" MAIN STEAM LINE.

6(B). NAME OF MANUFACTURER TENNESSEE VALLEY AUTHORITY
ADDRESS OF MANUFACTURER (IF KNOWN) P. O. BOX 2000, DECATUR, ALABAMA

6(C). MANUFACTURER'S SERIAL NUMBER N/A

6(D). NATIONAL BOARD NUMBER (IF APPLICABLE) N/A

6(E). OTHER IDENTIFICATION (SUBASSEMBLY NUMBER, HEAT NUMBER, ETC.) N/A

6(F). YEAR BUILT N/A CODE CLASS [ ] 1 [X] 2

6(G). REPAIRED [X] REPLACED [ ][c] REPLACEMENT [ ][d]

6(H). ASME CODE STAMPED YES [ ] NO [X]

7. BRIEF DESCRIPTION OF REPAIR OR REPLACEMENT WORK PERFORMED
REPAIRED WELDS ON LUGS FOR 24" MAIN STEAM LINE

8. TESTS CONDUCTED: HYDROSTATIC [ ] PNEUMATIC [ ]
NOMINAL OPERATING PRESSURE [ ] OTHER [ ]
PRESSURE N/A PSI TEST TEMPERATURE ____ F°

9. REMARKS: WELDS REPAIRED IN ACCORDANCE WITH WORK ORDER # MR-A795886

( )APPLICABLE MANUFACTURERS DATA REPORT[e] TO BE ATTACHED.

RESPONSIBLE ENGR. Jeffery W. Jones I. MARS DATE 1-9-91
ORGANIZATION

ANII K. Russell Fr DATE 1-10-91

[a]SHEET NOS. FILLED IN BY TESTING AND DIAGNOSTIC PROGRAMS BRANCH.
[b]FOR WORK PERFORMED BY CERTIFICATE HOLDER
[c]REPLACED (LIKE OR EQUIVALENT).
[d]REPLACEMENT (MODIFICATION).
[e]WHEN REQUIRED BY CONSTRUCTION CODE.

RETENTION PERIOD: LIFETIME RESPONSIBLE ORGANIZATION: NM-PROCESSES/SPECIAL PROGRAMS

FORM SDSP-403
FORM NIS-2 ATTACHMENT DWB 11-22-90

1. (OWNER) TENNESSEE VALLEY AUTHORITY
NUCLEAR POWER

DATE 11-21-90

2. (PLANT) BROWNS FERRY NUCLEAR PLANT
P.O. BOX 2000
DECATUR, ALABAMA

SHEET[a] 214 of 255

MRA 795887

3. WORK PERFORMED BY: TVA
COMPANY

P.O. BOX 2000
ADDRESS

DECATUR, ALABAMA
CITY AND STATE

TYPE CODE SYMBOL STAMP[b] N/A

AUTHORIZATION NO.[b] N/A

EXPIRATION DATE[b] N/A

4. IDENTIFICATION OF SYSTEM SYSTEM 01/MAIN STEAM

5(A). APPLICATION CONSTRUCTION CODE USAS B31.1.0 19 67
EDITION THRU ADDENDA N/A CODE CASE N/A

5(B). APPLICATION EDITION OF SECTION XI UTILIZED FOR REPAIRS OR REPLACEMENTS: 1980

6(A). NAME OF COMPONENT(S) AND DESCRIPTION (INCLUDE SIZE, CAPACITY, MATERIAL, AND LOCATION AS NEEDED TO AID IN IDENTIFICATION)
REPAIR WELDS ON LUGS FOR 24" MAIN STEAM LINE.

6(B). NAME OF MANUFACTURER TENNESSEE VALLEY AUTHORITY
ADDRESS OF MANUFACTURER (IF KNOWN) P. O. BOX 2000, DECATUR, ALABAMA

6(C). MANUFACTURER'S SERIAL NUMBER N/A

6(D). NATIONAL BOARD NUMBER (IF APPLICABLE) N/A

6(E). OTHER IDENTIFICATION (SUBASSEMBLY NUMBER, HEAT NUMBER, ETC.) N/A

6(F). YEAR BUILT N/A CODE CLASS [ ] 1 [X] 2

6(G). REPAIRED [X] REPLACED [ ][c] REPLACEMENT [ ][d]

6(H). ASME CODE STAMPED YES [ ] NO [X]

7. BRIEF DESCRIPTION OF REPAIR OR REPLACEMENT WORK PERFORMED
REPAIRED WELDS ON LUGS FOR 24" MAIN STEAM LINE

8. TESTS CONDUCTED: HYDROSTATIC [ ] PNEUMATIC [ ]
NOMINAL OPERATING PRESSURE [ ] OTHER [ ]
PRESSURE N/A PSI TEST TEMPERATURE F°

9. REMARKS: WELDS REPAIRED IN ACCORDANCE WITH WORK ORDER # MRA795887

( )APPLICABLE MANUFACTURERS DATA REPORT[e] TO BE ATTACHED.

RESPONSIBLE ENGR. Jeffery W. Jones / MODS DATE 1-9-91
ORGANIZATION

ANII L. Russell DATE 1-10-91

[a]SHEET NOS. FILLED IN BY TESTING AND DIAGNOSTIC PROGRAMS BRANCH.
[b]FOR WORK PERFORMED BY CERTIFICATE HOLDER
[c]REPLACED (LIKE OR EQUIVALENT).
[d]REPLACEMENT (MODIFICATION).
[e]WHEN REQUIRED BY CONSTRUCTION CODE.

RETENTION PERIOD: LIFETIME RESPONSIBLE ORGANIZATION: NM-PROCESSES/SPECIAL PROGRAMS

DTN # 89-00304

FORM SDSP-403
FORM NIS-2 ATTACHMENT

1. (OWNER) TENNESSEE VALLEY AUTHORITY
NUCLEAR POWER

DATE 11-21-90

2. (PLANT) BROWNS FERRY NUCLEAR PLANT
P.O. BOX 2000
DECATUR, ALABAMA

SHEET[a] 215 of 255

MR# 795888

3. WORK PERFORMED BY: TVA
COMPANY

P.O. BOX 2000
ADDRESS

DECATUR, ALABAMA
CITY AND STATE

TYPE CODE SYMBOL STAMP[b] N/A

AUTHORIZATION NO.[b] N/A

EXPIRATION DATE[b] N/A

4. IDENTIFICATION OF SYSTEM SYSTEM 01/MAIN STEAM

5(A). APPLICATION CONSTRUCTION CODE USAS B31.1.0 19 67
EDITION THRU ADDENDA N/A CODE CASE N/A

5(B). APPLICATION EDITION OF SECTION XI UTILIZED FOR REPAIRS OR REPLACEMENTS: 1980

6(A). NAME OF COMPONENT(S) AND DESCRIPTION (INCLUDE SIZE, CAPACITY, MATERIAL, AND LOCATION AS NEEDED TO AID IN IDENTIFICATION)
REPAIR WELDS ON LUGS FOR 24" MAIN STEAM LINE.

6(B). NAME OF MANUFACTURER TENNESSEE VALLEY AUTHORITY
ADDRESS OF MANUFACTURER (IF KNOWN) P. O. BOX 2000, DECATUR, ALABAMA

6(C). MANUFACTURER'S SERIAL NUMBER N/A

6(D). NATIONAL BOARD NUMBER (IF APPLICABLE) N/A

6(E). OTHER IDENTIFICATION (SUBASSEMBLY NUMBER, HEAT NUMBER, ETC.) N/A

6(F). YEAR BUILT N/A CODE CLASS [ ] 1 [X] 2

6(G). REPAIRED [X] REPLACED [ ][c] REPLACEMENT [ ][d]

6(H). ASME CODE STAMPED YES [ ] NO [X]

7. BRIEF DESCRIPTION OF REPAIR OR REPLACEMENT WORK PERFORMED
REPAIRED WELDS ON LUGS FOR 24" MAIN STEAM LINE

8. TESTS CONDUCTED: HYDROSTATIC [ ] PNEUMATIC [ ]
NOMINAL OPERATING PRESSURE [ ] OTHER [ ]
PRESSURE N/A PSI TEST TEMPERATURE F°

9. REMARKS: WELDS REPAIRED IN ACCORDANCE WITH WORK ORDER # MR A795888

( )APPLICABLE MANUFACTURERS DATA REPORT[e] TO BE ATTACHED.

RESPONSIBLE ENGR. Jeffrey W. Jones / MADS DATE 1-9-91
ORGANIZATION

ANII R. Russell Jr. DATE 1-10-91

[a]SHEET NOS. FILLED IN BY TESTING AND DIAGNOSTIC PROGRAMS BRANCH.
[b]FOR WORK PERFORMED BY CERTIFICATE HOLDER
[c]REPLACED (LIKE OR EQUIVALENT).
[d]REPLACEMENT (MODIFICATION).
[e]WHEN REQUIRED BY CONSTRUCTION CODE.

RETENTION PERIOD: LIFETIME RESPONSIBLE ORGANIZATION: NM-PROCESSES/SPECIAL PROGRAMS

FORM SDSP-403 DWB 11-21-90
FORM NIS-2 ATTACHMENT

1. (OWNER) TENNESSEE VALLEY AUTHORITY
NUCLEAR POWER

DATE 11-21-90

2. (PLANT) BROWNS FERRY NUCLEAR PLANT
P.O. BOX 2000
DECATUR, ALABAMA

SHEET[a] 216 of 255

3. WORK PERFORMED BY: TVA
COMPANY

P.O. BOX 2000
ADDRESS

DECATUR, ALABAMA
CITY AND STATE

TYPE CODE SYMBOL STAMP[b] N/A

AUTHORIZATION NO.[b] N/A

EXPIRATION DATE[b] N/A

4. IDENTIFICATION OF SYSTEM SYSTEM 01/MAIN STEAM

5(A). APPLICATION CONSTRUCTION CODE USAS B31.1.0 19 67
EDITION THRU ADDENDA N/A CODE CASE N/A

5(B). APPLICATION EDITION OF SECTION XI UTILIZED FOR REPAIRS OR REPLACEMENTS: 1980

6(A). NAME OF COMPONENT(S) AND DESCRIPTION (INCLUDE SIZE, CAPACITY, MATERIAL, AND LOCATION AS NEEDED TO AID IN IDENTIFICATION)
REPAIR WELDS ON LUGS FOR 24" MAIN STEAM LINE.

6(B). NAME OF MANUFACTURER TENNESSEE VALLEY AUTHORITY
ADDRESS OF MANUFACTURER (IF KNOWN) P. O. BOX 2000, DECATUR, ALABAMA

6(C). MANUFACTURER'S SERIAL NUMBER N/A

6(D). NATIONAL BOARD NUMBER (IF APPLICABLE) N/A

6(E). OTHER IDENTIFICATION (SUBASSEMBLY NUMBER, HEAT NUMBER, ETC.) N/A

6(F). YEAR BUILT N/A CODE CLASS [ ] 1 [X] 2

6(G). REPAIRED [X] REPLACED [ ][c] REPLACEMENT [ ][d]

6(H). ASME CODE STAMPED YES [ ] NO [X]

7. BRIEF DESCRIPTION OF REPAIR OR REPLACEMENT WORK PERFORMED
REPAIRED WELDS ON LUGS FOR 24" MAIN STEAM LINE

8. TESTS CONDUCTED: HYDROSTATIC [ ] PNEUMATIC [ ]
NOMINAL OPERATING PRESSURE [ ] OTHER [ ]
PRESSURE N/A PSI TEST TEMPERATURE F°

9. REMARKS: WELDS REPAIRED IN ACCORDANCE WITH WORK ORDER # MR A795889

( )APPLICABLE MANUFACTURERS DATA REPORT[e] TO BE ATTACHED.

RESPONSIBLE ENGR. Jeffrey W. Jones / MODB DATE 1-9-91
ORGANIZATION

ANII R. Russell Jr. DATE 1-10-91

[a]SHEET NOS. FILLED IN BY TESTING AND DIAGNOSTIC PROGRAMS BRANCH.
[b]FOR WORK PERFORMED BY CERTIFICATE HOLDER
[c]REPLACED (LIKE OR EQUIVALENT).
[d]REPLACEMENT (MODIFICATION).
[e]WHEN REQUIRED BY CONSTRUCTION CODE.

RETENTION PERIOD: LIFETIME RESPONSIBLE ORGANIZATION: NM-PROCESSES/SPECIAL-PROGRAMS

FORM SDSP-403
FORM NIS-2 ATTACHMENT

1. (OWNER) TENNESSEE VALLEY AUTHORITY
NUCLEAR POWER

DATE 11-21-90

2. (PLANT) BROWNS FERRY NUCLEAR PLANT
P.O. BOX 2000
DECATUR, ALABAMA

SHEET[a] 217 of 255

MRH 795890

3. WORK PERFORMED BY: TVA
COMPANY

P.O. BOX 2000
ADDRESS

DECATUR, ALABAMA
CITY AND STATE

TYPE CODE SYMBOL STAMP[b] N/A

AUTHORIZATION NO.[b] N/A

EXPIRATION DATE[b] N/A

4. IDENTIFICATION OF SYSTEM SYSTEM 01/MAIN STEAM

5(A). APPLICATION CONSTRUCTION CODE USAS B31.1.0 19 67
EDITION THRU ADDENDA N/A CODE CASE N/A

5(B). APPLICATION EDITION OF SECTION XI UTILIZED FOR REPAIRS OR REPLACEMENTS: 1980

6(A). NAME OF COMPONENT(S) AND DESCRIPTION (INCLUDE SIZE, CAPACITY, MATERIAL, AND LOCATION AS NEEDED TO AID IN IDENTIFICATION)
REPAIR WELDS ON LUGS FOR 24" MAIN STEAM LINE.

6(B). NAME OF MANUFACTURER TENNESSEE VALLEY AUTHORITY
ADDRESS OF MANUFACTURER (IF KNOWN) P. O. BOX 2000, DECATUR, ALABAMA

6(C). MANUFACTURER'S SERIAL NUMBER N/A

6(D). NATIONAL BOARD NUMBER (IF APPLICABLE) N/A

6(E). OTHER IDENTIFICATION (SUBASSEMBLY NUMBER, HEAT NUMBER, ETC.) N/A

6(F). YEAR BUILT N/A CODE CLASS [ ] 1 [X] 2

6(G). REPAIRED [X] REPLACED [ ][c] REPLACEMENT [ ][d]

6(H). ASME CODE STAMPED YES [ ] NO [X]

7. BRIEF DESCRIPTION OF REPAIR OR REPLACEMENT WORK PERFORMED
REPAIRED ~~LUGS~~ WELDS ON LUGS FOR 24" MAIN STEAM LINE
JWJ 1-9-91

8. TESTS CONDUCTED: HYDROSTATIC [ ] PNEUMATIC [ ]
NOMINAL OPERATING PRESSURE [ ] OTHER [ ]
PRESSURE N/A PSI TEST TEMPERATURE F°

9. REMARKS: WELDS REPAIRED IN ACCORDANCE WITH WORK ORDER # MR 795890

( )APPLICABLE MANUFACTURERS DATA REPORT[e] TO BE ATTACHED.

RESPONSIBLE ENGR. Jeffrey W. Jones I MONS DATE 1-9-91
ORGANIZATION

ANII R. Russell Jr. DATE 1-13-91

[a]SHEET NOS. FILLED IN BY TESTING AND DIAGNOSTIC PROGRAMS BRANCH.
[b]FOR WORK PERFORMED BY CERTIFICATE HOLDER
[c]REPLACED (LIKE OR EQUIVALENT).
[d]REPLACEMENT (MODIFICATION).
[e]WHEN REQUIRED BY CONSTRUCTION CODE.

RETENTION PERIOD: LIFETIME RESPONSIBLE ORGANIZATION: NM-PROCESSES/SPECIAL PROGRAMS

Tennessee Valley Authority
Browns Ferry Nuclear Plant

NOV 10 1986

Form SDSP-26
SDSP-13.3
Page 4 of 5

ASME SECTION XI SUMMARY REPORT

Tennessee Valley Authority
Office of Nuclear Power, 1750 CST2-C
Browns Ferry Nuclear Plant Unit 2
P.O. Box 2000
Decatur, Alabama

Comm. Service Date 3-1-75
System Reactor Core Isolation Cooling
TVA Class III, ASME CLASS II
Workplan/MR No. 1Ø38Ø5

Furnish the following for the repair or replacement for the as-left-condition of the component (after field work is complete). Mark all blanks (indicate NA for items which do not apply).

National Board Number of repaired or replaced component. NA

Name of the components and description (include size, capacity, material, and location)--Theses requirements may be satisfied by attaching an applicable drawing.
Replace missing flange bolt on RCIC flow restricting orifice (2-FM-71-36) with SA 193 grade bolting material. SA 193 GR B7

Name of Manufacturer N/A

Address of Manufacturer (if known) NA

Manufacturer's component identification numbers (i.e., serial number, subassembly number, heat number). If more than one component is replaced, attach weld map and identify items by item number. NA

Brief description of repair or replacement work performed, including conditions observed and corrective measures taken, as applicable (reference DCR, CAR, etc.; drawing may be attached with attached affected area circled).
Replaced flange bolt MR # 8Ø38Ø5 ON FLOW RESTRICTING ORIFICE 2-FM-71-36.

Brief description of post repair or replacement tests and examinations (if required) by instruction or procedure number. ~~Craftsman verify no external leakage with system in service.~~ MMM 1-15-91 ~~Stamp above work as performed leakage check have been all to perform~~ 12/23/88
NO PRESSURE NDE REQUIRED. MMM 1-15-91
ANII/ANI name, employer, and business address ~~R. Russell Hartford~~
R. RUSSELL, B.J. RICE / THE HARTFORD STEAM BOILER INSP. AND INS. CO.
4330 GEORGETOWN SQUARE, ATLANTA, GA 31338

Date work completed 6/30/87

Cognizant Engineer — Date 12/23/88

Retention: Period - Lifetime; Responsibility - Modifications Supervisor

Tennessee Valley Authority
Browns Ferry Nuclear Plant
Site Director Standard Practice

JUL 18 1989

Form SDSP-26
SDSP-13.3
Page 4 of 5

ASME SECTION XI SUMMARY REPORT

Tennessee Valley Authority
Office of Nuclear Power, 1750 CST2-C
Browns Ferry Nuclear Plant Unit 2
P.O. Box 2000
Decatur, Alabama

Comm. Service Date 3-1-75
System 85 CONTROL ROD DRIVE
TVA Class ASME CLASS II
Workplan/(MR) No. A-804670

Furnish the following for the repair or replacement for the as-left condition of the component (after field work is complete). Mark all blanks (indicate NA for items which do not apply).

National Board Number of repaired or replaced component. NA

Name of the components and description (include size, capacity, material, and location)--Theses requirements may be satisfied by attaching an applicable drawing.
CONTROL ROD DRIVE SUPPORT # H-567, PIPE CLAMP (PART # 6101)

Name of Manufacturer BERGEN PATTERSON

Address of Manufacturer (if known) BOSTON, MASS.

Manufacturer's component identification numbers (i.e., serial number, subassembly number, heat number). If more than one component is replaced, attach weld map and identify items by item number.

Repair [X] Replacement/Modification [ ]

Brief description of repair or replacement work performed, including conditions observed and corrective measures taken, as applicable (reference DCR, CAR, etc.; drawing may be attached with attached affected area circled).
BASE METAL REPAIR (WELDING) OF DEPRESSION IN PIPE CLAMP.

Brief description of post repair or replacement tests and examinations (if required) by instruction or procedure number. N-VT-1

ANII/ANI name, employer, and business address ROOSEVELT RUSSELL/BILL RICE
HARTFORD STEAM BOILER INSURANCE CO. 1117 PERIMETER CENTER WEST
~~SUITE~~ SUITE E-301, ATLANTA, GA. 30338
10-18-89
Date work completed 8-18-88

* M. R. Mantz 10-18-89
Responsible Engineer Date

* REF. CAQR # BFQ890425

Retention: Period - Lifetime; Responsibility - DCRM

TENNESSEE VALLEY AUTHORITY
BROWNS FERRY NUCLEAR PLANT
SITE DIRECTOR STANDARD PRACTICE

SEP 22 1989

FORM PAGE 1 OF
FORM SDSP-403
SDSP 13.3

FORM SDSP-403
FORM NIS-2 ATTACHMENT

SHEET 220 of 255

* REFERENCE CAQR # CHA890003713

1. (OWNER) TENNESSEE VALLEY AUTHORITY
NUCLEAR POWER

DATE 06/09/90

2. (PLANT) BROWNS FERRY NUCLEAR PLANT
P.O. BOX 2000
DECATUR, ALABAMA

SHEET [a] 1 OF 1

MR#804673

3. WORK PERFORMED BY: TVA
COMPANY

TYPE CODE SYMBOL STAMP [b] N/A

PO BOX 2000
ADDRESS

AUTHORIZATION NO. [b] N/A

DECATUR ALABAMA
CITY AND STATE

EXPIRATION DATE [b] N/A

4. IDENTIFICATION OF SYSTEM SYSTEM-73, R-39

5(A). APPLICATION CONSTRUCTION CODE USAS B31.1.0 19 67
EDITION THRU ADDENDA N/A CODE CASE N/A

5(B). APPLICATION EDITION OF SECTION XI UTILIZED FOR REPAIRS OR REPLACEMENTS: 1980

6(A). NAME OF COMPONENT(S) AND DESCRIPTION (INCLUDE SIZE, CAPACITY, MATERIAL, AND LOCATION AS NEEDED TO AID IN IDENTIFICATION)
UNIT-2, EL-519, RXBLDG, HANGER-R-39, MR#804673, 2-HGR-73-R-39

6(B). NAME OF MANUFACTURER TVA
ADDRESS OF MANUFACTURER (IF KNOWN) PO BOX 2000 DECATUR ALABAMA

6(c). MANUFACTURER'S SERIAL NUMBER N/A

6(D). NATIONAL BOARD NUMBER (IF APPLICABLE) N/A

6(E). OTHER IDENTIFICATION (SUBASSEMBLY NUMBER, HEAT NUMBER, ETC.) N/A

6(F). YEAR BUILT N/A CODE CLASS ☐ 1 ☒ 2

6(G). REPAIRED ☒ REPLACED ☐ [c] REPLACEMENT ☐ [d]

6(H). ASME CODE STAMPED YES ☐ NO ☒

7. BRIEF DESCRIPTION OF REPAIR OR REPLACEMENT WORK PERFORMED.
REMOVE LINEAR INDICATION BY GRINDING

8. TESTS CONDUCTED: HYDROSTATIC ☐ PNEUMATIC ☐
NOMINAL OPERATING PRESSURE ☐ OTHER ☐
PRESSURE N/A PSI TEST TEMPERATURE N/A F°

9. REMARKS:

( ) APPLICABLE MANUFACTURERS DATA REPORT [e] TO BE ATTACHED.

RESPONSIBLE ENGR. R.W. AYCOCK / SYSTEM DATE 06/09/90
ORGANIZATION

ANII * R. Russell Jr DATE 6-20-90

[a] SHEET NOS. FILLED IN BY TESTING AND DIAGNOSTIC PROGRAMS BRANCH.
[b] FOR WORK PERFORMED BY CERTIFICATE HOLDER
[c] REPLACED (LIKE OR EQUIVALENT).
[d] REPLACEMENT (MODIFICATION).
[e] WHEN REQUIRED BY CONSTRUCTION CODE.

RETENTION PERIOD: LIFETIME RESPONSIBLE ORGANIZATION: NM-PROCESSES/SPECIAL PROGRAMS

Tennessee Valley Authority
Browns Ferry Nuclear Plant

NOV 10 1986

Form SDSP-26
SDSP-13.3
Page 4 of 5

ASME SECTION XI SUMMARY REPORT

Tennessee Valley Authority
Office of Nuclear Power, 1750 CST2-C
Browns Ferry Nuclear Plant Unit 2
P.O. Box 2000
Decatur, Alabama

Comm. Service Date 3-1-75
System #74
TVA Class D
Workplan (MR) No. A-805261

Furnish the following for the repair or replacement for the as-left condition of the component (after field work is complete). Mark all blanks (indicate NA for items which do not apply).

National Board Number of repaired or replaced component. NA

Name of the components and description (include size, capacity, material, and location)--Theses requirements may be satisfied by attaching an applicable drawing.
RHR. HEAT EXCHANGER 'D' REINFORCING PAD

Name of Manufacturer PEREEX

Address of Manufacturer (if known) MILWAUKEE, WIS.

Manufacturer's component identification numbers (i.e., serial number, subassembly number, heat number). If more than one component is replaced, attach weld map and identify items by item number.
NA

Brief description of repair or replacement work performed, including conditions observed and corrective measures taken, as applicable (reference DCR, CAR, etc.; drawing may be attached with attached affected area circled).
LAMINATION EXCAVATION GROOVE ON EDGE OF NOZZLE REINFORCEMENT PAD WELD FILLED PER SDSP 13.1 & SM 11-B-9.

Brief description of post repair or replacement tests and examinations (if required) by instruction or procedure number.
N-VT-3, N-MT-1

ANII/ANI name, employer, and business address HARTFORD STEAMBOILER INSP. & INS. CO.
1117 PERIMETER CENTER WEST, SUITE E301
ATLANTA, GA. 30338

Date work completed 11/13/87

Cognizant Engineer 11/13/87
Date

Retention: Period - Lifetime; Responsibility - Modifications Supervisor

Tennessee Valley Authority
Browns Ferry Nuclear Plant

NOV 10 1986

Form SDSP-26
SDSP-13.3
Page 4 of 5

ASME SECTION XI SUMMARY REPORT

Tennessee Valley Authority
Office of Nuclear Power, 1750 CST2-C
Browns Ferry Nuclear Plant Unit 2
P.O. Box 2000
Decatur, Alabama

Comm. Service Date 3-1-75
System RHR #74
TVA Class D
Workplan/MR No. A-805261

Furnish the following for the repair or replacement for the as-left condition of the component (after field work is complete). Mark all blanks (indicate NA for items which do not apply).

National Board Number of repaired or replaced component. N/A

Name of the components and description (include size, capacity, material, and location)--Theses requirements may be satisfied by attaching an applicable drawing.
RHR B&D HEAT EXCHANGER, ID NO. RHRG-6A-2D, A515, GR 70

Name of Manufacturer ~~N/A~~ N/S 7/21/87 PERFEX

Address of Manufacturer (if known) ~~N/A~~ N/S 7/21/87 MILWAUKEE, WIS.

Manufacturer's component identification numbers (i.e., serial number, subassembly number, heat number). If more than one component is replaced, attach weld map and identify items by item number.
N/A

Brief description of repair or replacement work performed, including conditions observed and corrective measures taken, as applicable (reference DCR, CAR, etc.; drawing may be attached with attached affected area circled).
FILLETWELD BUILDUP PERFORMED

*LAMINATIONS IN PAD EDGE IDENTIFIED, WILL BE EXCAVATED AND WELD REPAIRED PER THIS MR.

Brief description of post repair or replacement tests and examinations (if required) by instruction or procedure number.

N-VT-3, N-MT-1

ANII/ANI name, employer, and business address
HARTFORD STEAMBOILER INSPECTION & INSURANCE CO.
1117 PERIMETER CENTER WEST, SUITE E-301, ATLANTA, GA 30338

Date work completed 8/26/87

* [signature] 9/2/87
Cognizant Engineer Date

Retention: Period - Lifetime; Responsibility - Modifications Supervisor

Tennessee Valley Authority
Browns Ferry Nuclear Plant

NOV 10 1986

Form SDSP-26
SDSP-13.3
Page 4 of 5

ASME SECTION XI SUMMARY REPORT

Tennessee Valley Authority
Office of Nuclear Power, 1750 CST2-C
Browns Ferry Nuclear Plant Unit 2
P.O. Box 2000
Decatur, Alabama

Comm. Service Date 3/1/75
System #74 RHR
TVA Class D
Workplan/MR No. A-805287

Furnish the following for the repair or replacement for the as-left condition of the component (after field work is complete). Mark all blanks (indicate NA for items which do not apply).

National Board Number of repaired or replaced component. N/A

Name of the components and description (include size, capacity, material, and location)—Theses requirements may be satisfied by attaching an applicable drawing.

N/A RJS 9/10/87

RHR RESTRAINT R-65 BASE PLATE HOLE REINFORCEMENT WASHERS.

Name of Manufacturer N/A

Address of Manufacturer (if known) N/A

Manufacturer's component identification numbers (i.e., serial number, subassembly number, heat number). If more than one component is replaced, attach weld map and identify items by item number. N/A

Brief description of repair or replacement work performed, including conditions observed and corrective measures taken, as applicable (reference DCR, CAR, etc.; drawing may be attached with attached affected area circled).

RHR HANGER R-65 WAS REMOVED TO PERMIT ISI INSPECTION PER SI. 4.6.G. SSD ANCHORS AND FLAME CUT HOLES IN BASE PLATE REQUIRED MODIFICATION AND REPAIR IN ACCORDANCE TO 79-02 PROGRAM DURING REINSTALLATION.

Brief description of post repair or replacement tests and examinations (if required) by instruction or procedure number.

N-VT-2

ANII/ANI name, employer, and business address HARTFORD STEAMBOILER INSP. & INSURANCE CO.
1117 PERIMETER CENTER WEST, SUITE E-301
ATLANTA, GA. 30338

Date work completed 9/28/87

[signature] 9/29/87
Cognizant Engineer Date

Retention: Period - Lifetime; Responsibility - Modifications Supervisor

Tennessee Valley Authority
Browns Ferry Nuclear Plant

NOV 10 1986

Form SDSP-26
SDSP-13.3
Page 4 of 5

ASME SECTION XI SUMMARY REPORT

Tennessee Valley Authority
Office of Nuclear Power, 1750 CST2-C
Browns Ferry Nuclear Plant Unit 2
P.O. Box 2000
Decatur, Alabama

Comm. Service Date 3/1/75
System CRD #85
TVA Class B
Workplan/MR No. A-807056

Furnish the following for the repair or replacement for the as-left condition of the component (after field work is complete). Mark all blanks (indicate NA for items which do not apply).

National Board Number of repaired or replaced component. NA

Name of the components and description (include size, capacity, material, and location)--Theses requirements may be satisfied by attaching an applicable drawing.
CRD HYDRAULIC RETURN LINE WELD RCRD-2-50, RX BLDG, STEAM TUNNEL, EL 519'-6"

Name of Manufacturer NA

Address of Manufacturer (if known) NA

Manufacturer's component identification numbers (i.e., serial number, subassembly number, heat number). If more than one component is replaced, attach weld map and identify items by item number. NA

Brief description of repair or replacement work performed, including conditions observed and corrective measures taken, as applicable (reference DCR, CAR, etc.; drawing may be attached with attached affected area circled).
WELD REPAIR PERFORMED PER SDSP 13.1, GT-16-0-1, WELD MAP ATTACHMENT 2

Brief description of post repair or replacement tests and examinations (if required) by instruction or procedure number.
SURFACE - VT & PT VOLUMETRIC - RT & UT
PRESERVICE - VT & UT

ANII/ANI name, employer, and business address HARTFORD STEAMBOILER INSP & INSURANCE CO, 1117 PERIMETER CENTER WEST, SUITE E-301 ATLANTA, GA. 30338

Date work completed 8/4/87

8/5/87
Cognizant Engineer Date

Retention: Period - Lifetime; Responsibility - Modifications Supervisor

JUL 1 1 1988

ASME SECTION XI SUMMARY REPORT SHEET 225 of 255

Tennessee Valley Authority
Office of Nuclear Power, 1750 CST2-C
Browns Ferry Nuclear Plant Unit 2
P.O. Box 2000
Decatur, Alabama

Comm. Service Date 1974
System RHR (74)
TVA Class C
Workplan (MR) No. A-807989

Furnish the following for the repair or replacement for the as-left condition of the component (after field work is complete). Mark all blanks (indicate NA for items which do not apply).

National Board Number of repaired or replaced component. N/A AEC 2-16-89

Name of the components and description (include size, capacity, material, and location)—Theses requirements may be satisfied by attaching an applicable drawing.
12" Walworth GATE - 1/2" Globe BONNET VENT A-105 CARBON STEEL HANCOCK TYPE 5500 W - DRAWING 47W452-6, DWG A-12329-M-1-D

Name of Manufacturer Walworth AND HANCOCK

Address of Manufacturer (if known) N/A AEC 2/21/89

Manufacturer's component identification numbers (i.e., serial number, subassembly number, heat number). If more than one component is replaced, attach weld map and identify items by item number. TVA UNID 2-FCV-74-61 Walworth GATE 12" Contract # 90744 (1.3.1-1.D)(4) - BONNET VENT 1/2" A-105 Carbon STEEL HANCOCK Globe 5500 W

Repair [X] Replacement/Modification [ ]

Brief description of repair or replacement work performed, including conditions observed and corrective measures taken, as applicable (reference DCR, CAR, etc.; drawing may be attached with attached affected area circled).
REMOVE EXISTING 1/2" HANCOCK GLOBE VALVE WHICH IS THE BONNET VENT FOR VALVE 2-FCV-74-61 AND REWELD WELD VALVE AFTER THE BONNET HAS BEEN MACHINED.

Brief description of post repair or replacement tests and examinations (if required) by instruction or procedure number. N-VT-3, N-PT-9
2-SI-4.7.A.2.G.-3/74d

ANII/ANI name, employer, and business address Roosevelt Russell, JR., The HARTFORD STEAM BOILER INSPECTION AND INSURANCE CO., 1117 PERIMETER CENTER WEST, Suite E-301, ATLANTA, GA. 30338.

Date work completed 8-23-88

Albert E. Cooke 12-21-89
Responsible Engineer Date
REF. CAQR-BFQ-881091

Retention: Period - Lifetime; Responsibility - ERCU Supervisor

REV 0001

Tennessee Valley Authority
Browns Ferry Nuclear Plant

*Form SDSP-26
SDSP-13.3
Page 4 of 5

ASME SECTION XI SUMMARY REPORT

Tennessee Valley Authority
Office of Nuclear Power, 1750 CST2-C
Browns Ferry Nuclear Plant Unit 2
P.O. Box 2000
Decatur, Alabama

Comm. Service Date 1974
System 075 - CORE SPRAY
TVA Class 1
Workplan/MR No. A-807993

Furnish the following for the repair or replacement for the as-left condition of the component (after field work is complete). Mark all blanks (indicate NA for items which do not apply).

National Board Number of repaired or replaced component. N/A

Name of the components and description (include size, capacity, material, and location)--Theses requirements may be satisfied by attaching an applicable drawing.
CORE SPRAY TESTABLE CHECK VALVE, 2-FCV-75-026, 12" ROCKWELL TILTING DISK, CONTRACT #90744, DWG PD 420868

Name of Manufacturer ROCKWELL INT.

Address of Manufacturer (if known) RALEIGH, N.C.

Manufacturer's component identification numbers (i.e., serial number, subassembly number, heat number). If more than one component is replaced, attach weld map and identify items by item number.
DISK, PIECE NO. 2, DWG # PD-420868, ROCKWELL 12" TILTING DISK CKV.

Brief description of repair or replacement work performed, including conditions observed and corrective measures taken, as applicable (reference DCR, CAR, etc.; drawing may be attached with attached affected area circled).
DURING REPAIR OF VALVE DUE TO LLRT FAILURE, DISK WAS FOUND TO HAVE HINGE PINS MISALIGNED, REPLACED DISK WITH NEW ONE, REBORED AND DRILLED NEW HINGE PIN HOLES.

Brief description of post repair or replacement tests and examinations (if required) by instruction or procedure number. SI 3.3.1.B, SI 47.A.2.63, SI 3.2.2

ANII/ANI name, employer, and business address ROOSEVELT RUSSELL JR., THE HARTFORD STEAM BOILER INSPECTION AND INSURANCE CO. 1117 PERIMETER CENTER WEST, SUITE E-301, ATLANTA, GA 30338

Date work completed 2-26-89

Robert D. Mallo
Cognizant Engineer

12-26-89
Date

Retention: Period - Lifetime; Responsibility - Modifications Supervisor
*Addendum
0031p

ASME SECTION XI SUMMARY REPORT

Tennessee Valley Authority
Office of Nuclear Power, 1750 CST2-C
Browns Ferry Nuclear Plant Unit 2
P.O. Box 2000
Decatur, Alabama

Comm. Service Date 1973
System 73-HPCI
TVA Class II
Workplan/(MR) No. A-807995

Furnish the following for the repair or replacement for the as-left condition of the component (after field work is complete). Mark all blanks (indicate NA for items which do not apply).

National Board Number of repaired or replaced component. N/A

Name of the components and description (include size, capacity, material, and location)—Theses requirements may be satisfied by attaching an applicable drawing.
DISK FOR CRANE 16" L-150 W.E.O.S. GATE VALVE

Name of Manufacturer CRANE VALVE CO.

Address of Manufacturer (if known) 203 HAMPSHIRE St. INDIAN ORCHARD, MASS. 01151

Manufacturer's component identification numbers (i.e., serial number, subassembly number, heat number). If more than one component is replaced, attach weld map and identify items by item number. REPAIR OF DISK, Item #4 ON CRANE DWG PB139991

Repair [✓] Replacement/Modification [ ]

Brief description of repair or replacement work performed, including conditions observed and corrective measures taken, as applicable (reference DCR, CAR, etc.; drawing may be attached with attached affected area circled).
PERFORMED WELD BUILD-UP ON VALVE DISK. REPAIR WARRANTED BY NORMAL WEAR

Brief description of post repair or replacement tests and examinations (if required) by instruction or procedure number. LLRT 4.7.A.2.G-3/73.D TO BE PERFORMED ON SUPPORT MR-A-862846

ANII/ANI name, employer, and business address ROOSEVELT RUSSELL JR., THE HARTFORD STEAM BOILER INSPECTION AND INSURANCE CO., 1117 PERIMETER CENTER WEST, SUITE E-801, ATLANTA, GA. 30338

Date work completed 11-26-88

Robert D. Martin 11-29-88
Responsible Engineer Date

Retention: Period - Lifetime; Responsibility - ERCU Supervisor

TENNESSEE VALLEY AUTHORITY
BROWNS FERRY NUCLEAR PLANT
SITE DIRECTOR STANDARD PRACTICE

SEP 22 1989

FORM SDSP-403
SDSP 13.3

FORM SDSP-403
FORM NIS-2 ATTACHMENT

1. (OWNER) TENNESSEE VALLEY AUTHORITY
NUCLEAR POWER

DATE 2-12-90
REF. PRD 90-0020P 2/12/90
SHEET [a] 228 OF 255

2. (PLANT) BROWNS FERRY NUCLEAR PLANT
P.O. BOX 2000
DECATUR, ALABAMA

3. WORK PERFORMED BY: TVA-BFN (COMPANY)
PO Box 2000 (ADDRESS)
DECATUR, AL (CITY AND STATE)

TYPE CODE SYMBOL STAMP [b] NA
AUTHORIZATION NO. [b] NA
EXPIRATION DATE [b] NA

4. IDENTIFICATION OF SYSTEM 74 - RESIDUAL HEAT REMOVAL

5(A). APPLICATION CONSTRUCTION CODE ANSI B31.1 19 67
EDITION 1967 ADDENDA WINTER CODE CASE NA

5(B). APPLICATION EDITION OF SECTION XI UTILIZED FOR REPAIRS OR REPLACEMENTS: 1980

6(A). NAME OF COMPONENT(S) AND DESCRIPTION (INCLUDE SIZE, CAPACITY, MATERIAL, AND LOCATION AS NEEDED TO AID IN IDENTIFICATION)
24 INCH RHR PIPE INTEGRAL ATTACHMENT ON HANGER 2-HGR-74-H123
REF TVA DRWGS. 47W452-H10 AND 47A452-352

6(B). NAME OF MANUFACTURER TVA BFN
ADDRESS OF MANUFACTURER (IF KNOWN) NA 2/12/90

6(C). MANUFACTURER'S SERIAL NUMBER

6(D). NATIONAL BOARD NUMBER (IF APPLICABLE)

6(E). OTHER IDENTIFICATION (SUBASSEMBLY NUMBER, HEAT NUMBER, ETC.) NONE

6(F). YEAR BUILT UNKNOWN CODE CLASS ☐ 1 ☒ 2

6(G). REPAIRED ☒ REPLACED ☐ [c] REPLACEMENT ☐ [d]

6(H). ASME CODE STAMPED YES ☐ NO ☒

7. BRIEF DESCRIPTION OF REPAIR OR REPLACEMENT WORK PERFORMED.
REMOVED LINEAR INDICATION BY GRINDING, THEN PERFORMED NDE.

8. TESTS CONDUCTED: HYDROSTATIC ☐ PNEUMATIC ☐
NOMINAL OPERATING PRESSURE ☐ OTHER ☐
PRESSURE NA PSI TEST TEMPERATURE NA F°

9. REMARKS: MAINT. REQUEST A-813746

( ) APPLICABLE MANUFACTURERS DATA REPORT [e] TO BE ATTACHED.

RESPONSIBLE ENGR. [signature] 2/12/90 DATE 2/12/90
ORGANIZATION

ANII [signature] DATE 2-13-90

Michael R. Martin 6-18-91

[a] SHEET NOS. FILLED IN BY TESTING AND DIAGNOSTIC PROGRAMS BRANCH.
[b] FOR WORK PERFORMED BY CERTIFICATE HOLDER
[c] REPLACED (LIKE OR EQUIVALENT).
[d] REPLACEMENT (MODIFICATION).
[e] WHEN REQUIRED BY CONSTRUCTION CODE.

RETENTION PERIOD: LIFETIME RESPONSIBLE ORGANIZATION: NM-PROCESSES/SPECIAL PROGRAMS

TENNESSEE VALLEY AUTHORITY
BROWNS FERRY NUCLEAR PLANT
SITE DIRECTOR STANDARD PRACTICE

SEP 22 1989

FORM PAGE 1 OF 1
FORM SDSP-403
SDSP 13.3

FORM SDSP-403
FORM NIS-2 ATTACHMENT

SHEET 229 of 255

REFERENCE CAQR CHA890003713

1. (OWNER) TENNESSEE VALLEY AUTHORITY
NUCLEAR POWER

DATE 05/25/90

2. (PLANT) BROWNS FERRY NUCLEAR PLANT
P.O. BOX 2000
DECATUR, ALABAMA

SHEET [a] 1 OF 1

MR# 813794

3. WORK PERFORMED BY: TVA
COMPANY

TYPE CODE SYMBOL STAMP [b] N/A

P.O. BOX 2000
ADDRESS

AUTHORIZATION NO. [b] N/A

DECATUR ALABAMA
CITY AND STATE

EXPIRATION DATE [b] N/A

4. IDENTIFICATION OF SYSTEM SYSTEM-74 RHR

5(A). APPLICATION CONSTRUCTION CODE ANSI B31.1.0 19 67
EDITION THRU ADDENDA N/A CODE CASE N/A

5(B). APPLICATION EDITION OF SECTION XI UTILIZED FOR REPAIRS OR REPLACEMENTS: 1980

6(A). NAME OF COMPONENT(S) AND DESCRIPTION (INCLUDE SIZE, CAPACITY, MATERIAL, AND LOCATION AS NEEDED TO AID IN IDENTIFICATION)
UNIT-2, EL-577'-2", HANGER-3,

6(B). NAME OF MANUFACTURER TVA
ADDRESS OF MANUFACTURER (IF KNOWN) PO BOX 2000 DECATUR, ALABAMA

6(c). MANUFACTURER'S SERIAL NUMBER N/A

6(D). NATIONAL BOARD NUMBER (IF APPLICABLE) N/A

6(E). OTHER IDENTIFICATION (SUBASSEMBLY NUMBER, HEAT NUMBER, ETC.) N/A

6(F). YEAR BUILT N/A CODE CLASS ☒ 1 ☐ 2

6(G). REPAIRED ☒ REPLACED ☐ [c] REPLACEMENT ☐ [d]

6(H). ASME CODE STAMPED YES ☐ NO ☒

7. BRIEF DESCRIPTION OF REPAIR OR REPLACEMENT WORK PERFORMED.
WELDING, GTW-0-1A, N-VT-3, N-PT-1, GRINDING, BASE METAL PLATE ON EACH END OF THE CENTER SUPPORT BE PIPE SADDLE

8. TESTS CONDUCTED: HYDROSTATIC ☐ PNEUMATIC ☐
NOMINAL OPERATING PRESSURE ☐ OTHER ☐
PRESSURE N/A PSI TEST TEMPERATURE N/A F°

9. REMARKS:

( ) APPLICABLE MANUFACTURERS DATA REPORT [e] TO BE ATTACHED.

RESPONSIBLE ENGR. R.W. AYCOCK / SYSTEMS DATE 05/25/90
ORGANIZATION

ANII * R. Russell Jr. DATE 5-31-90

* REF CAQR# 890003713

[a] SHEET NOS. FILLED IN BY TESTING AND DIAGNOSTIC PROGRAMS BRANCH.
[b] FOR WORK PERFORMED BY CERTIFICATE HOLDER
[c] REPLACED (LIKE OR EQUIVALENT).
[d] REPLACEMENT (MODIFICATION).
[e] WHEN REQUIRED BY CONSTRUCTION CODE.

RETENTION PERIOD: LIFETIME RESPONSIBLE ORGANIZATION: NM-PROCESSES/SPECIAL PROGRAMS

3484 2556

TENNESSEE VALLEY AUTHORITY
BROWNS FERRY NUCLEAR PLANT
SITE DIRECTOR STANDARD PRACTICE

SEP 22 1989

FORM SDSP-403
SDSP 13.3

FORM SDSP-403
FORM NIS-2 ATTACHMENT

Ref CAQR:CHA890003713

1. (OWNER) TENNESSEE VALLEY AUTHORITY
NUCLEAR POWER — DATE 5-7-90

2. (PLANT) BROWNS FERRY NUCLEAR PLANT
P.O. BOX 2000
DECATUR, ALABAMA — SHEET [a] 230 OF 255

MR# 814759

3. WORK PERFORMED BY: TVA (COMPANY) — TYPE CODE SYMBOL STAMP [b] N/A
P.O. BOX 2000 (ADDRESS) — AUTHORIZATION NO. [b] N/A
DECATUR, ALABAMA (CITY AND STATE) — EXPIRATION DATE [b] N/A

4. IDENTIFICATION OF SYSTEM System 074 - Residual Heat Removal (RHR)

5(A). APPLICATION CONSTRUCTION CODE ASME SECT III Cl. "C" 19 67
EDITION NA ADDENDA NA CODE CASE NA

5(B). APPLICATION EDITION OF SECTION XI UTILIZED FOR REPAIRS OR REPLACEMENTS: 1980

6(A). NAME OF COMPONENT(S) AND DESCRIPTION (INCLUDE SIZE, CAPACITY, MATERIAL, AND LOCATION AS NEEDED TO AID IN IDENTIFICATION)
RHR HTX 2D, B&D HTX RM, EL565', REACTOR BLDG

6(B). NAME OF MANUFACTURER PERFEX CORPORATION
ADDRESS OF MANUFACTURER (IF KNOWN) BERLIN, WISCONSIN

6(C). MANUFACTURER'S SERIAL NUMBER N/A

6(D). NATIONAL BOARD NUMBER (IF APPLICABLE) N/A

6(E). OTHER IDENTIFICATION (SUBASSEMBLY NUMBER, HEAT NUMBER, ETC.) N/A

6(F). YEAR BUILT 1967 — CODE CLASS ☐ 1 ☒ 2

6(G). REPAIRED ☒ — REPLACED ☐ [c] — REPLACEMENT ☐ [d]

6(H). ASME CODE STAMPED YES ☒ MT 5/8/90 — NO ☐

7. BRIEF DESCRIPTION OF REPAIR OR REPLACEMENT WORK PERFORMED.
Removed linear indication by grinding

8. TESTS CONDUCTED: HYDROSTATIC ☐ — PNEUMATIC ☐
NOMINAL OPERATING PRESSURE ☐ — OTHER ☐
PRESSURE N/A PSI — TEST TEMPERATURE N/A F°

9. REMARKS: linear indications removed per MMC-147

( ) APPLICABLE MANUFACTURERS DATA REPORT [e] TO BE ATTACHED. Michael R. Martin 7-3-91
RESPONSIBLE ENGR. Michael Hammer / System Eng DATE 5-8-90
ORGANIZATION

ANII _____ DATE _____

[a] SHEET NOS. FILLED IN BY TESTING AND DIAGNOSTIC PROGRAMS BRANCH.
[b] FOR WORK PERFORMED BY CERTIFICATE HOLDER
[c] REPLACED (LIKE OR EQUIVALENT).
[d] REPLACEMENT (MODIFICATION).
[e] WHEN REQUIRED BY CONSTRUCTION CODE.

RETENTION PERIOD: LIFETIME — RESPONSIBLE ORGANIZATION: NM-PROCESSES/SPECIAL PROGRAMS

TENNESSEE VALLEY AUTHORITY
BROWNS FERRY NUCLEAR PLANT
SITE DIRECTOR STANDARD PRACTICE

SEP 22 1989

FORM PAGE 1 OF
FORM SDSP-403
SDSP 13.3

SHEET 231 of 255

FORM SDSP-403
FORM NIS-2 ATTACHMENT

*REF. CAQR # CHA 890003713

1. (OWNER) TENNESSEE VALLEY AUTHORITY
NUCLEAR POWER

DATE 6-8-90

2. (PLANT) BROWNS FERRY NUCLEAR PLANT
P.O. BOX 2000
DECATUR, ALABAMA

SHEET [a] 1 OF 1

MRH 814811

3. WORK PERFORMED BY: TVA
COMPANY

TYPE CODE SYMBOL STAMP [b] N/A

PO BOX 2000
ADDRESS

AUTHORIZATION NO. [b] N/A

DECATUR ALABAMA
CITY AND STATE

EXPIRATION DATE [b] N/A

4. IDENTIFICATION OF SYSTEM SYSTEM-73. HPCI- H-67

5(A). APPLICATION CONSTRUCTION CODE USAS B31.1.0 19 67
EDITION THRU ADDENDA N/A CODE CASE N/A

5(B). APPLICATION EDITION OF SECTION XI UTILIZED FOR REPAIRS OR REPLACEMENTS: 1980

6(A). NAME OF COMPONENT(S) AND DESCRIPTION (INCLUDE SIZE, CAPACITY, MATERIAL, AND LOCATION AS NEEDED TO AID IN IDENTIFICATION)
UNIT-2 EL. 519, SE QUAD HPCI ROOM, RX BLDG, 2-HGR-73-H-67

6(B). NAME OF MANUFACTURER UNKNOWN
ADDRESS OF MANUFACTURER (IF KNOWN) N/A

6(c). MANUFACTURER'S SERIAL NUMBER N/A

6(D). NATIONAL BOARD NUMBER (IF APPLICABLE) N/A

6(E). OTHER IDENTIFICATION (SUBASSEMBLY NUMBER, HEAT NUMBER, ETC.) N/A

6(F). YEAR BUILT N/A CODE CLASS ☐ 1 ☒ 2

6(G). REPAIRED ☒ REPLACED ☐ [c] REPLACEMENT ☐ [d]

6(H). ASME CODE STAMPED YES ☐ NO ☒

7. BRIEF DESCRIPTION OF REPAIR OR REPLACEMENT WORK PERFORMED.
REMOVED INDICATIONS BY BUFFING.

8. TESTS CONDUCTED: HYDROSTATIC ☐ PNEUMATIC ☐
NOMINAL OPERATING PRESSURE ☐ OTHER ☐
PRESSURE N/A PSI TEST TEMPERATURE N/A F°

9. REMARKS:

( ) APPLICABLE MANUFACTURERS DATA REPORT [e] TO BE ATTACHED.

RESPONSIBLE ENGR: R.W. AYCOCK SYSTEM DATE 06/08/90
ORGANIZATION

ANII DATE

[a] SHEET NOS. FILLED IN BY TESTING AND DIAGNOSTIC PROGRAMS BRANCH.
[b] FOR WORK PERFORMED BY CERTIFICATE HOLDER
[c] REPLACED (LIKE OR EQUIVALENT).
[d] REPLACEMENT (MODIFICATION).
[e] WHEN REQUIRED BY CONSTRUCTION CODE.

RETENTION PERIOD: LIFETIME RESPONSIBLE ORGANIZATION: NM-PROCESSES/SPECIAL PROGRAMS

TENNESSEE VALLEY AUTHORITY
BROWNS FERRY NUCLEAR PLANT
SITE DIRECTOR STANDARD PRACTICE

SEP 22 1989

FORM PAGE 1 OF 1
FORM SDSP-403
SDSP 13.3

SHEET 232 of 255

FORM SDSP-403
FORM NIS-2 ATTACHMENT

REFERENCE CAQR# CHA 890003713

1. (OWNER) TENNESSEE VALLEY AUTHORITY
NUCLEAR POWER — DATE 06-01-90

2. (PLANT) BROWNS FERRY NUCLEAR PLANT
P.O. BOX 2000
DECATUR, ALABAMA — SHEET [a] 1 OF 1

MR# 814813

3. WORK PERFORMED BY: TVA (COMPANY) — TYPE CODE SYMBOL STAMP [b] N/A
PO BOX 2000 (ADDRESS) — AUTHORIZATION NO. [b] N/A
DECATUR ALABAMA (CITY AND STATE) — EXPIRATION DATE [b] N/A

4. IDENTIFICATION OF SYSTEM SYSTEM-73, HPCI, R-21-A,

5(A). APPLICATION CONSTRUCTION CODE USAS B31.1.0 19 67
EDITION THRU ADDENDA N/A CODE CASE N/A

5(B). APPLICATION EDITION OF SECTION XI UTILIZED FOR REPAIRS OR REPLACEMENTS: 1980

6(A). NAME OF COMPONENT(S) AND DESCRIPTION (INCLUDE SIZE, CAPACITY, MATERIAL, AND LOCATION AS NEEDED TO AID IN IDENTIFICATION)
UNIT-2, EL-529, SOUTH EAST QUAD

6(B). NAME OF MANUFACTURER UNKNOWN
ADDRESS OF MANUFACTURER (IF KNOWN) UNKNOWN

6(c). MANUFACTURER'S SERIAL NUMBER N/A

6(D). NATIONAL BOARD NUMBER (IF APPLICABLE) N/A

6(E). OTHER IDENTIFICATION (SUBASSEMBLY NUMBER, HEAT NUMBER, ETC.) N/A

6(F). YEAR BUILT N/A — CODE CLASS ☐ 1 ☒ 2

6(G). REPAIRED ☒ — REPLACED ☐ [c] — REPLACEMENT ☐ [d]

6(H). ASME CODE STAMPED YES ☐ NO ☒

7. BRIEF DESCRIPTION OF REPAIR OR REPLACEMENT WORK PERFORMED
REMOVED LINEAR INDICATIONS BY BUFFING + GRINDING

8. TESTS CONDUCTED: HYDROSTATIC ☐ PNEUMATIC ☐
NOMINAL OPERATING PRESSURE ☐ OTHER ☐
PRESSURE N/A PSI TEST TEMPERATURE N/A F°

9. REMARKS:

( ) APPLICABLE MANUFACTURERS DATA REPORT [e] TO BE ATTACHED.
RESPONSIBLE ENGR. R.W. AYCOCK / SYSTEMS DATE 06/01/90
ORGANIZATION
ANII DATE

* REF CAQR# CHA 890003713

[a] SHEET NOS. FILLED IN BY TESTING AND DIAGNOSTIC PROGRAMS BRANCH.
[b] FOR WORK PERFORMED BY CERTIFICATE HOLDER
[c] REPLACED (LIKE OR EQUIVALENT).
[d] REPLACEMENT (MODIFICATION).
[e] WHEN REQUIRED BY CONSTRUCTION CODE.

RETENTION PERIOD: LIFETIME RESPONSIBLE ORGANIZATION: NM-PROCESSES/SPECIAL PROGRAMS

Tennessee Valley Authority
Browns Ferry Nuclear Plant

NOV 10 1986

Form SDSP-26
SDSP-13.3
Page 4 of 5

ASME SECTION XI SUMMARY REPORT

Tennessee Valley Authority
Office of Nuclear Power, 1750 CST2-C
Browns Ferry Nuclear Plant Unit 2
P.O. Box 2000
Decatur, Alabama

Comm. Service Date 3-1-75
System MAINSTEAM # 01
TVA Class ASME CLASS I
Workplan/MR No. A-814831

Furnish the following for the repair or replacement for the as-left condition of the component (after field work is complete). Mark all blanks (indicate NA for items which do not apply).

National Board Number of repaired or replaced component. NA

Name of the components and description (include size, capacity, material, and location)—Theses requirements may be satisfied by attaching an applicable drawing.
MAINSTEAM SUPPORT MS-2-SS51 PIPE ATTACHMENT.
A-36 CARBON STEEL SEE DWG BERGEN PATERSON A93-3 SH 1 OF 2

Name of Manufacturer ~~NA~~ 8/26/87 BERGEN PATERSON

Address of Manufacturer (if known) UNKNOWN

Manufacturer's component identification numbers (i.e., serial number, subassembly number, heat number). If more than one component is replaced, attach weld map and identify items by item number.
EAZ-B C.S. WELDED ASSY.

Brief description of repair or replacement work performed, including conditions observed and corrective measures taken, as applicable (reference DCR, CAR, etc.; drawing may be attached with attached affected area circled).
WELD REPAIR PIPE ATTACHMENT ASSEMBLY CROSS BRACE

Brief description of post repair or replacement tests and examinations (if required) by instruction or procedure number.
N-VT-2* N-VT-1

ANII/ANI name, employer, and business address HARTFORD STEAMBOILER INSP. & INS. CO.
1117 PERIMETER CENTER WEST, SUITE E-301
ATLANTA, GA. 30338

Date work completed 10/6/87

10/6/87
Cognizant Engineer Date

*Michael R. Martin 5-21-91

R Pope 5/21/91 ANII

Retention: Period - Lifetime; Responsibility - Modifications Manager

Retention: Period - Lifetime; Responsibility - Modifications Supervisor

TENNESSEE VALLEY AUTHORITY
BROWNS FERRY NUCLEAR PLANT
SITE DIRECTOR STANDARD PRACTICE

SEP 22 1989

FORM PAGE 1 OF 1
FORM SDSP-403
SDSP 13.3

FORM SDSP-403
FORM NIS-2 ATTACHMENT

1. (OWNER) TENNESSEE VALLEY AUTHORITY
NUCLEAR POWER

DATE 5-19-90

2. (PLANT) BROWNS FERRY NUCLEAR PLANT
P.O. BOX 2000
DECATUR, ALABAMA

SHEET [a] 234 OF 255

MR# 815964

3. WORK PERFORMED BY: TVA (COMPANY)
P.O. Box 2000 (ADDRESS)
Decature, Alabama (CITY AND STATE)

TYPE CODE SYMBOL STAMP [b] NA
AUTHORIZATION NO. [b] NA
EXPIRATION DATE [b] NA

4. IDENTIFICATION OF SYSTEM SYS 85, Control Rod Drive

5(A). APPLICATION CONSTRUCTION CODE Section III 19 74
EDITION with ADDENDA 1975 CODE CASE NA

5(B). APPLICATION EDITION OF SECTION XI UTILIZED FOR REPAIRS OR REPLACEMENTS: 1980

6(A). NAME OF COMPONENT(S) AND DESCRIPTION (INCLUDE SIZE, CAPACITY, MATERIAL, AND LOCATION AS NEEDED TO AID IN IDENTIFICATION)
BWR-6 CRD from Hartsville modified by GE for use at BFNP BWR-4

6(B). NAME OF MANUFACTURER GE
ADDRESS OF MANUFACTURER (IF KNOWN) UNKNOWN

6(C). MANUFACTURER'S SERIAL NUMBER A4719

6(D). NATIONAL BOARD NUMBER (IF APPLICABLE) N/A

6(E). OTHER IDENTIFICATION (SUBASSEMBLY NUMBER, HEAT NUMBER, ETC.)
2-CRD-85-2647

6(F). YEAR BUILT UNKNOWN CODE CLASS ☒ 1 ☐ 2

6(G). REPAIRED ☐ REPLACED ☒ [c] REPLACEMENT ☐ [d]

6(H). ASME CODE STAMPED YES ☒ NO ☐

7. BRIEF DESCRIPTION OF REPAIR OR REPLACEMENT WORK PERFORMED.
Replaced BWR-4 CRD with modified BWR-6 CRD

8. TESTS CONDUCTED: HYDROSTATIC ☒ PNEUMATIC ☐
NOMINAL OPERATING PRESSURE ☐ OTHER ☐
PRESSURE 1158 PSI TEST TEMPERATURE 182 F°

9. REMARKS: Hydrostatic Test to be conducted during vessel hydro per 2-SI-2.2.1.B, REF. W.O. 90-08936-00J

( ) APPLICABLE MANUFACTURERS DATA REPORT [e] TO BE ATTACHED.
RESPONSIBLE ENGR. Ernest L. Wellmire Tech Spec * DATE 5/19/90
ORGANIZATION M. Martin 7-3-91

ANII _____ DATE _____

* REF. CAQR# CHA 890003713

[a] SHEET NOS. FILLED IN BY TESTING AND DIAGNOSTIC PROGRAMS BRANCH.
[b] FOR WORK PERFORMED BY CERTIFICATE HOLDER
[c] REPLACED (LIKE OR EQUIVALENT).
[d] REPLACEMENT (MODIFICATION).
[e] WHEN REQUIRED BY CONSTRUCTION CODE.

RETENTION PERIOD: LIFETIME RESPONSIBLE ORGANIZATION: NM-PROCESSES/SPECIAL PROGRAMS

TENNESSEE VALLEY AUTHORITY
BROWNS FERRY NUCLEAR PLANT
SITE DIRECTOR STANDARD PRACTICE

SEP 22 1989

FORM PAGE 1 OF 1
FORM SDSP-403
SDSP 13.3

FORM SDSP-403
FORM NIS-2 ATTACHMENT

1. (OWNER) TENNESSEE VALLEY AUTHORITY
NUCLEAR POWER

DATE 6-27-90

2. (PLANT) BROWNS FERRY NUCLEAR PLANT
P.O. BOX 2000
DECATUR, ALABAMA

SHEET [a] 235 OF 255

MRH 815966

3. WORK PERFORMED BY: TVA (COMPANY)
P.O. Box 2000 (ADDRESS)
Decature, Alabama (CITY AND STATE)

TYPE CODE SYMBOL STAMP [b] NA
AUTHORIZATION NO. [b] NA
EXPIRATION DATE [b] NA

4. IDENTIFICATION OF SYSTEM SYS 85, Control Rod Drive

5(A). APPLICATION CONSTRUCTION CODE Section III 19 74
EDITION with ADDENDA 1975 CODE CASE NA

5(B). APPLICATION EDITION OF SECTION XI UTILIZED FOR REPAIRS OR REPLACEMENTS: 1980

6(A). NAME OF COMPONENT(S) AND DESCRIPTION (INCLUDE SIZE, CAPACITY, MATERIAL, AND LOCATION AS NEEDED TO AID IN IDENTIFICATION)
BWR-6 CRD from Hartsville modified by GE for use at BFNP BWR-4

6(B). NAME OF MANUFACTURER GE
ADDRESS OF MANUFACTURER (IF KNOWN) UNKNOWN

6(c). MANUFACTURER'S SERIAL NUMBER A 3919

6(D). NATIONAL BOARD NUMBER (IF APPLICABLE) N/A

6(E). OTHER IDENTIFICATION (SUBASSEMBLY NUMBER, HEAT NUMBER, ETC.)
2-CRD-85-2659

6(F). YEAR BUILT UNKNOWN CODE CLASS [X] 1 [ ] 2

6(G). REPAIRED [ ] REPLACED [X] [c] REPLACEMENT [ ] [d]

6(H). ASME CODE STAMPED YES [X] NO [ ]

7. BRIEF DESCRIPTION OF REPAIR OR REPLACEMENT WORK PERFORMED.
Replaced BWR-4 CRD with modified BWR-6 CRD

8. TESTS CONDUCTED: HYDROSTATIC [X] PNEUMATIC [ ]
NOMINAL OPERATING PRESSURE [ ] OTHER [ ]
PRESSURE 1158 PSI TEST TEMPERATURE 182 F[e]

9. REMARKS: Hydrostatic Test to be conducted during vessel hydro per 2-SE-3.3.1.B, REF W.O. 90-08985-00

( ) APPLICABLE MANUFACTURERS DATA REPORT [e] TO BE ATTACHED.

RESPONSIBLE ENGR. Michael R. Martin / 6-27-90 DATE 6-27-90
ORGANIZATION M/M/VA C&RMP 7-3-91

ANII _____ DATE _____

* REF. CAQR # CHA890003713

[a] SHEET NOS. FILLED IN BY TESTING AND DIAGNOSTIC PROGRAMS BRANCH.
[b] FOR WORK PERFORMED BY CERTIFICATE HOLDER
[c] REPLACED (LIKE OR EQUIVALENT).
[d] REPLACEMENT (MODIFICATION).
[e] WHEN REQUIRED BY CONSTRUCTION CODE.

RETENTION PERIOD: LIFETIME RESPONSIBLE ORGANIZATION: NM-PROCESSES/SPECIAL PROGRAMS

TENNESSEE VALLEY AUTHORITY
BROWNS FERRY NUCLEAR PLANT
SITE DIRECTOR STANDARD PRACTICE

SEP 22 1989

FORM PAGE 1 OF 1
FORM SDSP-403
SDSP 13.3

FORM SDSP-403
FORM NIS-2 ATTACHMENT

1. (OWNER) TENNESSEE VALLEY AUTHORITY
NUCLEAR POWER

DATE 6-27-90

2. (PLANT) BROWNS FERRY NUCLEAR PLANT
P.O. BOX 2000
DECATUR, ALABAMA

SHEET [a] 236 OF 255

MR# 815967

3. WORK PERFORMED BY: TVA (COMPANY)
P.O. Box 2000 (ADDRESS)
Decature, Alabama (CITY AND STATE)

TYPE CODE SYMBOL STAMP [b] NA
AUTHORIZATION NO. [b] NA
EXPIRATION DATE [b] NA

4. IDENTIFICATION OF SYSTEM SYS 85, Control Rod Drive

5(A). APPLICATION CONSTRUCTION CODE Section III 19 74
EDITION with ADDENDA 1975 CODE CASE NA

5(B). APPLICATION EDITION OF SECTION XI UTILIZED FOR REPAIRS OR REPLACEMENTS: 19 80

6(A). NAME OF COMPONENT(S) AND DESCRIPTION (INCLUDE SIZE, CAPACITY, MATERIAL, AND LOCATION AS NEEDED TO AID IN IDENTIFICATION)
BWR-6 CRD from Hartsville modified by GE for use at BFNP BWR-4

6(B). NAME OF MANUFACTURER GE
ADDRESS OF MANUFACTURER (IF KNOWN) UNKNOWN

6(c). MANUFACTURER'S SERIAL NUMBER A5300

6(D). NATIONAL BOARD NUMBER (IF APPLICABLE) N/A

6(E). OTHER IDENTIFICATION (SUBASSEMBLY NUMBER, HEAT NUMBER, ETC.)
2-CRD 85-3007 S/N A5300

6(F). YEAR BUILT UNKNOWN CODE CLASS ☒ 1 ☐ 2

6(G). REPAIRED ☐ REPLACED ☒ [c] REPLACEMENT ☐ [d]

6(H). ASME CODE STAMPED YES ☒ NO ☐

7. BRIEF DESCRIPTION OF REPAIR OR REPLACEMENT WORK PERFORMED.
Replaced BWR-4 CRD with modified BWR-6 CRD

8. TESTS CONDUCTED: HYDROSTATIC ☒ PNEUMATIC ☐
NOMINAL OPERATING PRESSURE ☐ OTHER ☐
PRESSURE 1158 PSI TEST TEMPERATURE 182 F°

9. REMARKS: Hydrostatic Test to be conducted during vessel hydro per 2-SI-3.3.1.B, REF. W.O. 90-08936-00 J

( ) APPLICABLE MANUFACTURERS DATA REPORT [e] TO BE ATTACHED. M. Martin 7-3-91
RESPONSIBLE ENGR. Michael Martin /Pa/Nuc Cal DATE 6-27-90
ORGANIZATION
ANII DATE

* REF. CAQR # CHA 890003713.

[a] SHEET NOS. FILLED IN BY TESTING AND DIAGNOSTIC PROGRAMS BRANCH.
[b] FOR WORK PERFORMED BY CERTIFICATE HOLDER
[c] REPLACED (LIKE OR EQUIVALENT).
[d] REPLACEMENT (MODIFICATION).
[e] WHEN REQUIRED BY CONSTRUCTION CODE.

RETENTION PERIOD: LIFETIME RESPONSIBLE ORGANIZATION: NM—PROCESSES/SPECIAL PROGRAMS

TENNESSEE VALLEY AUTHORITY
BROWNS FERRY NUCLEAR PLANT
SITE DIRECTOR STANDARD PRACTICE

SEP 22 1989

FORM PAGE 1 OF 1
FORM SDSP-403
SDSP 13.3

FORM SDSP-403
FORM NIS-2 ATTACHMENT

1. (OWNER) TENNESSEE VALLEY AUTHORITY
NUCLEAR POWER

DATE 5-22-90

2. (PLANT) BROWNS FERRY NUCLEAR PLANT
P.O. BOX 2000
DECATUR, ALABAMA

SHEET [a] 237 OF 255

MR# 815968

3. WORK PERFORMED BY: TVA (COMPANY)
P.O. Box 2000 (ADDRESS)
Decature, Alabama (CITY AND STATE)

TYPE CODE SYMBOL STAMP [b] NA
AUTHORIZATION NO. [b] NA
EXPIRATION DATE [b] NA

4. IDENTIFICATION OF SYSTEM SYS 85, Control Rod Drive

5(A). APPLICATION CONSTRUCTION CODE Section III 19 74
EDITION with ADDENDA 1975 CODE CASE

5(B). APPLICATION EDITION OF SECTION XI UTILIZED FOR REPAIRS OR REPLACEMENTS: 1980

6(A). NAME OF COMPONENT(S) AND DESCRIPTION (INCLUDE SIZE, CAPACITY, MATERIAL, AND LOCATION AS NEEDED TO AID IN IDENTIFICATION)
BWR-6 CRD from Hartsville modified by GE for use at BFNP BWR-4

6(B). NAME OF MANUFACTURER GE
ADDRESS OF MANUFACTURER (IF KNOWN) UNKNOWN

6(c). MANUFACTURER'S SERIAL NUMBER A4814

6(D). NATIONAL BOARD NUMBER (IF APPLICABLE) N/A

6(E). OTHER IDENTIFICATION (SUBASSEMBLY NUMBER, HEAT NUMBER, ETC.)
2-CRD-85-3035

6(F). YEAR BUILT UNKNOWN CODE CLASS ☒ 1 ☐ 2

6(G). REPAIRED ☐ REPLACED ☒ [c] REPLACEMENT ☐ [d]

6(H). ASME CODE STAMPED YES ☒ NO ☐

7. BRIEF DESCRIPTION OF REPAIR OR REPLACEMENT WORK PERFORMED.
Replaced BWR-4 CRD with modified BWR-6 CRD

8. TESTS CONDUCTED: HYDROSTATIC ☒ PNEUMATIC ☐
NOMINAL OPERATING PRESSURE ☐ OTHER ☐
PRESSURE 1158 PSI TEST TEMPERATURE 182 F°

9. REMARKS: Hydrostatic Test to be conducted during vessel hydro per R-SI-3.3.1.B, REF. W.O. 90-08936.00

( ) APPLICABLE MANUFACTURERS DATA REPORT [e] TO BE ATTACHED

RESPONSIBLE ENGR. Ernest Williams Tech. Spt. DATE 5/22/90 M. Mangeny 7-3-91
ORGANIZATION

ANII DATE

* REF CAQR# CHA 890003713

[a] SHEET NOS. FILLED IN BY TESTING AND DIAGNOSTIC PROGRAMS BRANCH.
[b] FOR WORK PERFORMED BY CERTIFICATE HOLDER
[c] REPLACED (LIKE OR EQUIVALENT).
[d] REPLACEMENT (MODIFICATION).
[e] WHEN REQUIRED BY CONSTRUCTION CODE.

RETENTION PERIOD: LIFETIME RESPONSIBLE ORGANIZATION: NM-PROCESSES/SPECIAL PROGRAMS

TENNESSEE VALLEY AUTHORITY
BROWNS FERRY NUCLEAR PLANT
SITE DIRECTOR STANDARD PRACTICE

SEP 22 1989

FORM PAGE 1 OF 1
FORM SDSP-403
SDSP 13.3

FORM SDSP-403
FORM NIS-2 ATTACHMENT

1. (OWNER) TENNESSEE VALLEY AUTHORITY
NUCLEAR POWER

DATE 5-18-90

2. (PLANT) BROWNS FERRY NUCLEAR PLANT
P.O. BOX 2000
DECATUR, ALABAMA

SHEET [a] 238 OF 255

MR# 815 969

3. WORK PERFORMED BY: TVA
COMPANY

TYPE CODE SYMBOL STAMP [b] NA

P.O. Box 2000
ADDRESS

AUTHORIZATION NO. [b] NA

Decature, Alabama
CITY AND STATE

EXPIRATION DATE [b] NA

4. IDENTIFICATION OF SYSTEM SYS 85, Control Rod Drive

5(A). APPLICATION CONSTRUCTION CODE Section III 19 74
EDITION with ADDENDA 1975 CODE CASE NA

5(B). APPLICATION EDITION OF SECTION XI UTILIZED FOR REPAIRS OR REPLACEMENTS: 1980

6(A). NAME OF COMPONENT(S) AND DESCRIPTION (INCLUDE SIZE, CAPACITY, MATERIAL, AND LOCATION AS NEEDED TO AID IN IDENTIFICATION)
BWR-6 CRD from Hartsville modified by GE for use at BFNP BWR-4

6(B). NAME OF MANUFACTURER GE
ADDRESS OF MANUFACTURER (IF KNOWN) UNKNOWN

6(c). MANUFACTURER'S SERIAL NUMBER A5383

6(D). NATIONAL BOARD NUMBER (IF APPLICABLE) N/A

6(E). OTHER IDENTIFICATION (SUBASSEMBLY NUMBER, HEAT NUMBER, ETC.)
2-CRD-85-3407 S/N A5383

6(F). YEAR BUILT UNKNOWN CODE CLASS ☒ 1 ☐ 2

6(G). REPAIRED ☐ REPLACED ☒ [c] REPLACEMENT ☐ [d]

6(H). ASME CODE STAMPED YES ☒ NO ☐

7. BRIEF DESCRIPTION OF REPAIR OR REPLACEMENT WORK PERFORMED.
Replaced BWR-4 CRD with modified BWR-6 CRD

8. TESTS CONDUCTED: HYDROSTATIC ☒ PNEUMATIC ☐
NOMINAL OPERATING PRESSURE ☐ OTHER ☐
PRESSURE 1158 PSI TEST TEMPERATURE 182 F°

9. REMARKS: Hydrostatic Test to be conducted during vessel hydro per A-SE-3.3.1.B ; REF. W.O. 90-08936-00J

( ) APPLICABLE MANUFACTURERS DATA REPORT [e] TO BE ATTACHED.
RESPONSIBLE ENGR. Ernest J. Williams / Tech Spt. DATE 5/18/90 M. Mantry
ORGANIZATION *

ANII DATE

* REF. CARR# CHA 890003713

[a] SHEET NOS. FILLED IN BY TESTING AND DIAGNOSTIC PROGRAMS BRANCH.
[b] FOR WORK PERFORMED BY CERTIFICATE HOLDER
[c] REPLACED (LIKE OR EQUIVALENT).
[d] REPLACEMENT (MODIFICATION).
[e] WHEN REQUIRED BY CONSTRUCTION CODE.

RETENTION PERIOD: LIFETIME RESPONSIBLE ORGANIZATION: NM-PROCESSES/SPECIAL PROGRAMS

TENNESSEE VALLEY AUTHORITY
BROWNS FERRY NUCLEAR PLANT
SITE DIRECTOR STANDARD PRACTICE

SEP 22 1989

FORM PAGE 1 OF 1
FORM SDSP-403
SDSP 13.3

FORM SDSP-403
FORM NIS-2 ATTACHMENT

1. (OWNER) TENNESSEE VALLEY AUTHORITY
NUCLEAR POWER

DATE 5-22-90

2. (PLANT) BROWNS FERRY NUCLEAR PLANT
P.O. BOX 2000
DECATUR, ALABAMA

SHEET [a] 239 OF 255

MR# 815970

3. WORK PERFORMED BY: TVA (COMPANY)
P.O. Box 2000 (ADDRESS)
Decature, Alabama (CITY AND STATE)

TYPE CODE SYMBOL STAMP [b] NA
AUTHORIZATION NO. [b] NA
EXPIRATION DATE [b] NA

4. IDENTIFICATION OF SYSTEM SYS 85, Control Rod Drive

5(A). APPLICATION CONSTRUCTION CODE Section III 19 74
EDITION with ADDENDA 1975 CODE CASE NA

5(B). APPLICATION EDITION OF SECTION XI UTILIZED FOR REPAIRS OR REPLACEMENTS: 1980

6(A). NAME OF COMPONENT(S) AND DESCRIPTION (INCLUDE SIZE, CAPACITY, MATERIAL, AND LOCATION AS NEEDED TO AID IN IDENTIFICATION)
BWR-6 CRD from Hartsville modified by GE for use at BFNP BWR-4

6(B). NAME OF MANUFACTURER GE
ADDRESS OF MANUFACTURER (IF KNOWN) UNKNOWN

6(C). MANUFACTURER'S SERIAL NUMBER A4484

6(D). NATIONAL BOARD NUMBER (IF APPLICABLE) N/A

6(E). OTHER IDENTIFICATION (SUBASSEMBLY NUMBER, HEAT NUMBER, ETC.)
~~2-CRD-74 EWO 5-22-90~~ 2-CRD-85-0427

6(F). YEAR BUILT UNKNOWN CODE CLASS [X] 1 [ ] 2

6(G). REPAIRED [ ] REPLACED [X] [c] REPLACEMENT [ ] [d]

6(H). ASME CODE STAMPED YES [X] NO [ ]

7. BRIEF DESCRIPTION OF REPAIR OR REPLACEMENT WORK PERFORMED.
Replaced BWR-4 CRD with modified BWR-6 CRD

8. TESTS CONDUCTED: HYDROSTATIC [X] PNEUMATIC [ ]
NOMINAL OPERATING PRESSURE [ ] OTHER [ ]
PRESSURE 1158 PSI TEST TEMPERATURE 182 F°

9. REMARKS: Hydrostatic Test to be conducted during vessel hydro per A-SI-2.3.1.B, REF. W.O. 90-08936-00

( ) APPLICABLE MANUFACTURER'S DATA REPORT [e] TO BE ATTACHED. M. Martin 7-3-91
RESPONSIBLE ENGR. Ernest L. Williams Mech. Spl. DATE 6/22/90
ORGANIZATION *

ANII _____ DATE _____

* REF CAQR # CHA 890003713

[a] SHEET NOS. FILLED IN BY TESTING AND DIAGNOSTIC PROGRAMS BRANCH.
[b] FOR WORK PERFORMED BY CERTIFICATE HOLDER
[c] REPLACED (LIKE OR EQUIVALENT).
[d] REPLACEMENT (MODIFICATION).
[e] WHEN REQUIRED BY CONSTRUCTION CODE.

RETENTION PERIOD: LIFETIME RESPONSIBLE ORGANIZATION: NM-PROCESSES/SPECIAL PROGRAMS

TENNESSEE VALLEY AUTHORITY
BROWNS FERRY NUCLEAR PLANT
SITE DIRECTOR STANDARD PRACTICE

SEP 22 1989

FORM PAGE 1 OF 1
FORM SDSP-403
SDSP 13.3

FORM SDSP-403
FORM NIS-2 ATTACHMENT

1. (OWNER) TENNESSEE VALLEY AUTHORITY
NUCLEAR POWER

DATE 5-24-90

2. (PLANT) BROWNS FERRY NUCLEAR PLANT
P.O. BOX 2000
DECATUR, ALABAMA

SHEET 240 OF 255

MR 815971

3. WORK PERFORMED BY: TVA (COMPANY)
P.O. Box 2000 (ADDRESS)
Decature, Alabama (CITY AND STATE)

TYPE CODE SYMBOL STAMP[b] NA
AUTHORIZATION NO.[b] NA
EXPIRATION DATE[b] NA

4. IDENTIFICATION OF SYSTEM SYS 85, Control Rod Drive

5(A). APPLICATION CONSTRUCTION CODE Section III 19 74
EDITION with ADDENDA 1975 CODE CASE NA

5(B). APPLICATION EDITION OF SECTION XI UTILIZED FOR REPAIRS OR REPLACEMENTS: 1980

6(A). NAME OF COMPONENT(S) AND DESCRIPTION (INCLUDE SIZE, CAPACITY, MATERIAL, AND LOCATION AS NEEDED TO AID IN IDENTIFICATION)
BWR-6 CRD from Hartsville modified by GE for use at BFNP BWR-4

6(B). NAME OF MANUFACTURER GE
ADDRESS OF MANUFACTURER (IF KNOWN) UNKNOWN

6(C). MANUFACTURER'S SERIAL NUMBER A5535

6(D). NATIONAL BOARD NUMBER (IF APPLICABLE) N/A

6(E). OTHER IDENTIFICATION (SUBASSEMBLY NUMBER, HEAT NUMBER, ETC.)
2-CRD-85-3447

6(F). YEAR BUILT UNKNOWN CODE CLASS [X] 1 [ ] 2

6(G). REPAIRED [ ] REPLACED [X][c] REPLACEMENT [ ][d]

6(H). ASME CODE STAMPED YES [X] NO [ ]

7. BRIEF DESCRIPTION OF REPAIR OR REPLACEMENT WORK PERFORMED.
Replaced BWR-4 CRD with modified BWR-6 CRD

8. TESTS CONDUCTED: HYDROSTATIC [X] PNEUMATIC [ ]
NOMINAL OPERATING PRESSURE [ ] OTHER [ ]
PRESSURE 1158 PSI TEST TEMPERATURE 182 F°

9. REMARKS: Hydrostatic Test to be conducted during vessel hydro per A-SI-3.3.1.R. REF. W.O. 90-08936-00

( ) APPLICABLE MANUFACTURERS DATA REPORT[e] TO BE ATTACHED. M. Martin 7-3-91
RESPONSIBLE ENGR. Ernest L. Williams Tech Spt DATE 5/24/90
ORGANIZATION *
ANII _____ DATE _____

* REF. CAQR # CHA890003713

[a] SHEET NOS. FILLED IN BY TESTING AND DIAGNOSTIC PROGRAMS BRANCH.
[b] FOR WORK PERFORMED BY CERTIFICATE HOLDER
[c] REPLACED (LIKE OR EQUIVALENT).
[d] REPLACEMENT (MODIFICATION).
[e] WHEN REQUIRED BY CONSTRUCTION CODE.

RETENTION PERIOD: LIFETIME RESPONSIBLE ORGANIZATION: NM-PROCESSES/SPECIAL PROGRAMS

TENNESSEE VALLEY AUTHORITY
BROWNS FERRY NUCLEAR PLANT
SITE DIRECTOR STANDARD PRACTICE

SEP 22 1989

FORM PAGE 1 OF 1
FORM SDSP-403
SDSP 13.3

FORM SDSP-403
FORM NIS-2 ATTACHMENT

1. (OWNER) TENNESSEE VALLEY AUTHORITY
NUCLEAR POWER

DATE 5-24-90

2. (PLANT) BROWNS FERRY NUCLEAR PLANT
P.O. BOX 2000
DECATUR, ALABAMA

SHEET [a] 241 OF 255

MRH 815972

3. WORK PERFORMED BY: TVA (COMPANY)
P.O. Box 2000 (ADDRESS)
Decature, Alabama (CITY AND STATE)

TYPE CODE SYMBOL STAMP [b] NA
AUTHORIZATION NO. [b] NA
EXPIRATION DATE [b] NA

4. IDENTIFICATION OF SYSTEM SYS 85, Control Rod Drive.

5(A). APPLICATION CONSTRUCTION CODE Section III 19 74
EDITION with ADDENDA 1975 CODE CASE NA

5(B). APPLICATION EDITION OF SECTION XI UTILIZED FOR REPAIRS OR REPLACEMENTS: 1980

6(A). NAME OF COMPONENT(S) AND DESCRIPTION (INCLUDE SIZE, CAPACITY, MATERIAL, AND LOCATION AS NEEDED TO AID IN IDENTIFICATION)
BWR-6 CRD from Hartsville modified by GE for use at BFNP BWR-4

6(B). NAME OF MANUFACTURER GE
ADDRESS OF MANUFACTURER (IF KNOWN) UNKNOWN

6(c). MANUFACTURER'S SERIAL NUMBER A5661

6(D). NATIONAL BOARD NUMBER (IF APPLICABLE) N/A

6(E). OTHER IDENTIFICATION (SUBASSEMBLY NUMBER, HEAT NUMBER, ETC.)
2-CRD-85-3807

6(F). YEAR BUILT UNKNOWN. CODE CLASS ☒ 1 ☐ 2

6(G). REPAIRED ☐ REPLACED ☒ [c] REPLACEMENT ☐ [d]

6(H). ASME CODE STAMPED YES ☒ NO ☐

7. BRIEF DESCRIPTION OF REPAIR OR REPLACEMENT WORK PERFORMED.
Replaced BWR-4 CRD with modified BWR-6 CRD

8. TESTS CONDUCTED: HYDROSTATIC ☒ PNEUMATIC ☐
NOMINAL OPERATING PRESSURE ☐ OTHER ☐
PRESSURE 1158 PSI TEST TEMPERATURE 182 F°

9. REMARKS: Hydrostatic Test to be conducted during vessel hydro per A-SI-2.2.1.A. REF. W.O. 90-08936-00

( ) APPLICABLE MANUFACTURER'S DATA REPORT [e] TO BE ATTACHED. M. Martin 7-3-91
RESPONSIBLE ENGR. Earl L. Williams / Tech Spec DATE 5/24/90
* ORGANIZATION

ANII _____ DATE _____

* REF. CAQR# CHA890003713

[a] SHEET NOS. FILLED IN BY TESTING AND DIAGNOSTIC PROGRAMS BRANCH.
[b] FOR WORK PERFORMED BY CERTIFICATE HOLDER
[c] REPLACED (LIKE OR EQUIVALENT).
[d] REPLACEMENT (MODIFICATION).
[e] WHEN REQUIRED BY CONSTRUCTION CODE.

RETENTION PERIOD: LIFETIME RESPONSIBLE ORGANIZATION: NM-PROCESSES/SPECIAL PROGRAM

TENNESSEE VALLEY AUTHORITY
BROWNS FERRY NUCLEAR PLANT
SITE DIRECTOR STANDARD PRACTICE

SEP 22 1989

FORM SDSP-403
FORM NIS-2 ATTACHMENT

1. (OWNER) TENNESSEE VALLEY AUTHORITY
NUCLEAR POWER
DATE 5-23-90

2. (PLANT) BROWNS FERRY NUCLEAR PLANT
P.O. BOX 2000
DECATUR, ALABAMA
SHEET [a] 242 OF 255
MR# 815973

3. WORK PERFORMED BY: TVA (COMPANY)
P.O. Box 2000 (ADDRESS)
Decature, Alabama (CITY AND STATE)
TYPE CODE SYMBOL STAMP [b] NA
AUTHORIZATION NO. [b] NA
EXPIRATION DATE [b] NA

4. IDENTIFICATION OF SYSTEM SYS 85, Control Rod Drive

5(A). APPLICATION CONSTRUCTION CODE Section III 19 74
EDITION with ADDENDA 1975 CODE CASE NA

5(B). APPLICATION EDITION OF SECTION XI UTILIZED FOR REPAIRS OR REPLACEMENTS: 1980

6(A). NAME OF COMPONENT(S) AND DESCRIPTION (INCLUDE SIZE, CAPACITY, MATERIAL, AND LOCATION AS NEEDED TO AID IN IDENTIFICATION)
BWR-6 CRD from Hartsville modified by GE for use at BFNP BWR-4

6(B). NAME OF MANUFACTURER GE
ADDRESS OF MANUFACTURER (IF KNOWN) UNKNOWN

6(C). MANUFACTURER'S SERIAL NUMBER A4745 BWR6

6(D). NATIONAL BOARD NUMBER (IF APPLICABLE) N/A

6(E). OTHER IDENTIFICATION (SUBASSEMBLY NUMBER, HEAT NUMBER, ETC.)
2-CRD-85-3831

6(F). YEAR BUILT UNKNOWN CODE CLASS ☒ 1 ☐ 2

6(G). REPAIRED ☐ REPLACED ☒ [c] REPLACEMENT ☐ [d]

6(H). ASME CODE STAMPED YES ☒ NO ☐

7. BRIEF DESCRIPTION OF REPAIR OR REPLACEMENT WORK PERFORMED.
Replaced BWR-4 CRD with modified BWR-6 CRD

8. TESTS CONDUCTED: HYDROSTATIC ☒ PNEUMATIC ☐
NOMINAL OPERATING PRESSURE ☐ OTHER ☐
PRESSURE 1158 PSI TEST TEMPERATURE 182 F°

9. REMARKS: Hydrostatic Test to be conducted during vessel hydro per 2-SI-3.3.1.B, REF W.O. 90-08936-00

( ) APPLICABLE MANUFACTURERS DATA REPORT [e] TO BE ATTACHED
RESPONSIBLE ENGR. Ernest L. Williams/Tech Spec ORGANIZATION DATE 5/23/90 M. Martin 7-3-91

ANII _____ DATE _____

* REF CAQR # CHA890003713

[a] SHEET NOS. FILLED IN BY TESTING AND DIAGNOSTIC PROGRAMS BRANCH.
[b] FOR WORK PERFORMED BY CERTIFICATE HOLDER
[c] REPLACED (LIKE OR EQUIVALENT).
[d] REPLACEMENT (MODIFICATION).
[e] WHEN REQUIRED BY CONSTRUCTION CODE.

RETENTION PERIOD: LIFETIME RESPONSIBLE ORGANIZATION: NM-PROCESSES/SPECIAL PROGRAMS

TENNESSEE VALLEY AUTHORITY
BROWNS FERRY NUCLEAR PLANT
SITE DIRECTOR STANDARD PRACTICE

SEP 22 1989

FORM PAGE 1 OF 1
FORM SDSP-403
SDSP 13.3

FORM SDSP-403
FORM NIS-2 ATTACHMENT

1. (OWNER) TENNESSEE VALLEY AUTHORITY
NUCLEAR POWER

DATE 5-22-90

2. (PLANT) BROWNS FERRY NUCLEAR PLANT
P.O. BOX 2000
DECATUR, ALABAMA

SHEET [a] 243 OF 255

MR# 815974

3. WORK PERFORMED BY: TVA
COMPANY

TYPE CODE SYMBOL STAMP [b] NA

P.O. Box 2000
ADDRESS

AUTHORIZATION NO. [b] NA

Decature, Alabama
CITY AND STATE

EXPIRATION DATE [b] NA

4. IDENTIFICATION OF SYSTEM SYS 85, Control Rod Drive

5(A). APPLICATION CONSTRUCTION CODE Section III 19 74
EDITION with ADDENDA 1975 CODE CASE

5(B). APPLICATION EDITION OF SECTION XI UTILIZED FOR REPAIRS OR REPLACEMENTS: 1980

6(A). NAME OF COMPONENT(S) AND DESCRIPTION (INCLUDE SIZE, CAPACITY, MATERIAL, AND LOCATION AS NEEDED TO AID IN IDENTIFICATION)
BWR-6 CRD from Hartsville modified by GE for use at BFNP BWR-4

6(B). NAME OF MANUFACTURER GE
ADDRESS OF MANUFACTURER (IF KNOWN) UNKNOWN

6(c). MANUFACTURER'S SERIAL NUMBER A5553

6(D). NATIONAL BOARD NUMBER (IF APPLICABLE) N/A

6(E). OTHER IDENTIFICATION (SUBASSEMBLY NUMBER, HEAT NUMBER, ETC.)
2-CRD-85-3859

6(F). YEAR BUILT UNKNOWN CODE CLASS [X] 1 [ ] 2

6(G). REPAIRED [ ] REPLACED [X] [c] REPLACEMENT [ ] [d]

6(H). ASME CODE STAMPED YES [X] NO [ ]

7. BRIEF DESCRIPTION OF REPAIR OR REPLACEMENT WORK PERFORMED.
Replaced BWR-4 CRD with modified BWR-6 CRD.

8. TESTS CONDUCTED: HYDROSTATIC [X] PNEUMATIC [ ]
NOMINAL OPERATING PRESSURE [ ] OTHER [ ]
PRESSURE 1158 PSI TEST TEMPERATURE 182 F°

9. REMARKS: Hydrostatic Test - to be conducted during vessel hydro per A-SI-2.2.1.B. REF. W.O. 90-08936-00

( ) APPLICABLE MANUFACTURERS DATA REPORT [e] TO BE ATTACHED

RESPONSIBLE ENGR. Ernest L. Williams Tech Spt. DATE 5/22/90
ORGANIZATION

*

ANII DATE

M. Mayeta 7-3-91

* REF. CAQR# CHA890003713

[a] SHEET NOS. FILLED IN BY TESTING AND DIAGNOSTIC PROGRAMS BRANCH.
[b] FOR WORK PERFORMED BY CERTIFICATE HOLDER
[c] REPLACED (LIKE OR EQUIVALENT).
[d] REPLACEMENT (MODIFICATION).
[e] WHEN REQUIRED BY CONSTRUCTION CODE.

RETENTION PERIOD: LIFETIME RESPONSIBLE ORGANIZATION: NM-PROCESSES/SPECIAL PROGRAMS

TENNESSEE VALLEY AUTHORITY
BROWNS FERRY NUCLEAR PLANT
SITE DIRECTOR STANDARD PRACTICE

SEP 22 1989

FORM PAGE 1 OF 1
FORM SDSP-403
SDSP 13.3

FORM SDSP-403
FORM NIS-2 ATTACHMENT

1. (OWNER) TENNESSEE VALLEY AUTHORITY
NUCLEAR POWER

DATE 5-24-90

2. (PLANT) BROWNS FERRY NUCLEAR PLANT
P.O. BOX 2000
DECATUR, ALABAMA

SHEET [a] 244 OF 255

MR# 815975

3. WORK PERFORMED BY: TVA
COMPANY

TYPE CODE SYMBOL STAMP [b] NA

P.O. Box 2000
ADDRESS

AUTHORIZATION NO. [b] NA

Decature, Alabama
CITY AND STATE

EXPIRATION DATE [b] NA

4. IDENTIFICATION OF SYSTEM SYS 85, Control Rod Drive

5(A). APPLICATION CONSTRUCTION CODE Section III 19 74
EDITION with ADDENDA 1975 CODE CASE NA

5(B). APPLICATION EDITION OF SECTION XI UTILIZED FOR REPAIRS OR REPLACEMENTS: 1980

6(A). NAME OF COMPONENT(S) AND DESCRIPTION (INCLUDE SIZE, CAPACITY, MATERIAL, AND LOCATION AS NEEDED TO AID IN IDENTIFICATION)
BWR-6 CRD from Hartsville modified by GE for use at BFNP BWR-4

6(B). NAME OF MANUFACTURER GE
ADDRESS OF MANUFACTURER (IF KNOWN) UNKNOWN

6(c). MANUFACTURER'S SERIAL NUMBER A4737

6(D). NATIONAL BOARD NUMBER (IF APPLICABLE) N/A

6(E). OTHER IDENTIFICATION (SUBASSEMBLY NUMBER, HEAT NUMBER, ETC.)
2-CRD-85-4215

6(F). YEAR BUILT UNKNOWN CODE CLASS ☒ 1 ☐ 2

6(G). REPAIRED ☐ REPLACED ☒ [c] REPLACEMENT ☐ [d]

6(H). ASME CODE STAMPED YES ☒ NO ☐

7. BRIEF DESCRIPTION OF REPAIR OR REPLACEMENT WORK PERFORMED.
Replaced BWR-4 CRD with modified BWR-6 CRD

8. TESTS CONDUCTED: HYDROSTATIC ☒ PNEUMATIC ☐
NOMINAL OPERATING PRESSURE ☐ OTHER ☐
PRESSURE 1158 PSI TEST TEMPERATURE 182 F°

9. REMARKS: Hydrostatic Test to be conducted during vessel hydro per 2-SI-2.2.1.B, REF W.O. 90-08936-00

( ) APPLICABLE MANUFACTURERS DATA REPORTS [e] TO BE ATTACHED.
RESPONSIBLE ENGR. Everett L. Williams Jr. M. Martin 7-3-91 DATE 5/24/90
ORGANIZATION *

ANII DATE

* REF. CAQR# CHA890003713

[a] SHEET NOS. FILLED IN BY TESTING AND DIAGNOSTIC PROGRAMS BRANCH.
[b] FOR WORK PERFORMED BY CERTIFICATE HOLDER
[c] REPLACED (LIKE OR EQUIVALENT).
[d] REPLACEMENT (MODIFICATION).
[e] WHEN REQUIRED BY CONSTRUCTION CODE.

RETENTION PERIOD: LIFETIME RESPONSIBLE ORGANIZATION: NM-PROCESSES/SPECIAL PROGRAMS

3485 \ 0716

TENNESSEE VALLEY AUTHORITY
BROWNS FERRY NUCLEAR PLANT
SITE DIRECTOR STANDARD PRACTICE

SEP 22 1989

FORM PAGE 1 OF 1
FORM SDSP-403
SDSP 13.3

FORM SDSP-403
FORM NIS-2 ATTACHMENT

1. (OWNER) TENNESSEE VALLEY AUTHORITY
NUCLEAR POWER

DATE 5-24-90

2. (PLANT) BROWNS FERRY NUCLEAR PLANT
P.O. BOX 2000
DECATUR, ALABAMA

SHEET 245 OF 255

MR# 815976

3. WORK PERFORMED BY: TVA (COMPANY)
P.O. Box 2000 (ADDRESS)
Decature, Alabama (CITY AND STATE)

TYPE CODE SYMBOL STAMP[b] NA
AUTHORIZATION NO.[b] NA
EXPIRATION DATE[b] NA

4. IDENTIFICATION OF SYSTEM SYS 85, Control Rod Drive

5(A). APPLICATION CONSTRUCTION CODE Section III 19 74
EDITION with ADDENDA 1975 CODE CASE NA

5(B). APPLICATION EDITION OF SECTION XI UTILIZED FOR REPAIRS OR REPLACEMENTS: 1980

6(A). NAME OF COMPONENT(S) AND DESCRIPTION (INCLUDE SIZE, CAPACITY, MATERIAL, AND LOCATION AS NEEDED TO AID IN IDENTIFICATION)
BWR-6 CRD from Hartsville modified by GE for use at BFNP BWR-4

6(B). NAME OF MANUFACTURER GE
ADDRESS OF MANUFACTURER (IF KNOWN) UNKNOWN

6(C). MANUFACTURER'S SERIAL NUMBER A5439

6(D). NATIONAL BOARD NUMBER (IF APPLICABLE) N/A

6(E). OTHER IDENTIFICATION (SUBASSEMBLY NUMBER, HEAT NUMBER, ETC.)
2-CRD-85-4333

6(F). YEAR BUILT UNKNOWN CODE CLASS ☒ 1 ☐ 2

6(G). REPAIRED ☐ REPLACED ☒[c] REPLACEMENT ☐[d]

6(H). ASME CODE STAMPED YES ☒ NO ☐

7. BRIEF DESCRIPTION OF REPAIR OR REPLACEMENT WORK PERFORMED.
Replaced BWR-4 CRD with modified BWR-6 CRD

8. TESTS CONDUCTED: HYDROSTATIC ☒ PNEUMATIC ☐
NOMINAL OPERATING PRESSURE ☐ OTHER ☐
PRESSURE 1158 PSI TEST TEMPERATURE 182 F°

9. REMARKS: Hydrostatic Test to be conducted during vessel hydro per R-SE-3.3.1.B ; REF. W.O. 90-08936-00 J

( ) APPLICABLE MANUFACTURERS DATA REPORT[e] TO BE ATTACHED. M. Moynton 7-3-91
RESPONSIBLE ENGR. Ernest L. Wallace / Tech Spt DATE 5/24/90
ORGANIZATION

AND DATE

* REF CAQR # CHA 890003713

[a] SHEET NOS. FILLED IN BY TESTING AND DIAGNOSTIC PROGRAMS BRANCH.
[b] FOR WORK PERFORMED BY CERTIFICATE HOLDER
[c] REPLACED (LIKE OR EQUIVALENT).
[d] REPLACEMENT (MODIFICATION).
[e] WHEN REQUIRED BY CONSTRUCTION CODE.

RETENTION PERIOD: LIFETIME RESPONSIBLE ORGANIZATION: NM-PROCESSES/SPECIAL PROGRAMS

TENNESSEE VALLEY AUTHORITY
BROWNS FERRY NUCLEAR PLANT
SITE DIRECTOR STANDARD PRACTICE

SEP 22 1989

FORM PAGE 1 OF 1
FORM SDSP-403
SDSP 13.3

FORM SDSP-403
FORM NIS-2 ATTACHMENT

1. (OWNER) TENNESSEE VALLEY AUTHORITY
NUCLEAR POWER

DATE 5-24-90

2. (PLANT) BROWNS FERRY NUCLEAR PLANT
P.O. BOX 2000
DECATUR, ALABAMA

SHEET [a] 246 OF 255

MR# 815977

3. WORK PERFORMED BY: TVA
COMPANY

P.O. Box 2000
ADDRESS

Decature, Alabama
CITY AND STATE

TYPE CODE SYMBOL STAMP [b] NA

AUTHORIZATION NO. [b] NA

EXPIRATION DATE [b] NA

4. IDENTIFICATION OF SYSTEM SYS 85, Control Rod Drive

5(A). APPLICATION CONSTRUCTION CODE Section III 19 74
EDITION with ADDENDA 1975 CODE CASE NA

5(B). APPLICATION EDITION OF SECTION XI UTILIZED FOR REPAIRS OR REPLACEMENTS: 1980

6(A). NAME OF COMPONENT(S) AND DESCRIPTION (INCLUDE SIZE, CAPACITY, MATERIAL, AND LOCATION AS NEEDED TO AID IN IDENTIFICATION)
BWR-6 CRD from Hartsville modified by GE for use at BFNP BWR-4

6(B). NAME OF MANUFACTURER GE
ADDRESS OF MANUFACTURER (IF KNOWN) UNKNOWN

6(c). MANUFACTURER'S SERIAL NUMBER A4425

6(D). NATIONAL BOARD NUMBER (IF APPLICABLE) N/A

6(E). OTHER IDENTIFICATION (SUBASSEMBLY NUMBER, HEAT NUMBER, ETC.)
2-CRD-85-4227

6(F). YEAR BUILT UNKNOWN CODE CLASS ☒ 1 ☐ 2

6(G). REPAIRED ☐ REPLACED ☒ [c] REPLACEMENT ☐ [d]

6(H). ASME CODE STAMPED YES ☒ NO ☐

7. BRIEF DESCRIPTION OF REPAIR OR REPLACEMENT WORK PERFORMED.
Replaced BWR-4 CRD with modified BWR-6 CRD

8. TESTS CONDUCTED: HYDROSTATIC ☒ PNEUMATIC ☐
NOMINAL OPERATING PRESSURE ☐ OTHER ☐
PRESSURE 1158 PSI TEST TEMPERATURE 182 F°

9. REMARKS: Hydrostatic Test to be conducted during vessel hydro per 2-SI-3.3.1.B, REF. W.O. 90-08936-00J

( ) APPLICABLE MANUFACTURERS DATA REPORT [e] TO BE ATTACHED.
RESPONSIBLE ENGR. * Ernest L. Williams Jr. ORGANIZATION Tech Spt DATE 5/24/90 M. Martin 7-3-91

ANII DATE

* REF. CAQR# CHA 890003713

[a] SHEET NOS. FILLED IN BY TESTING AND DIAGNOSTIC PROGRAMS BRANCH.
[b] FOR WORK PERFORMED BY CERTIFICATE HOLDER
[c] REPLACED (LIKE OR EQUIVALENT).
[d] REPLACEMENT (MODIFICATION).
[e] WHEN REQUIRED BY CONSTRUCTION CODE.

RETENTION PERIOD: LIFETIME RESPONSIBLE ORGANIZATION: NM-PROCESSES/SPECIAL PROGRAMS

3485 0730

TENNESSEE VALLEY AUTHORITY
BROWNS FERRY NUCLEAR PLANT
SITE DIRECTOR STANDARD PRACTICE

SEP 22 1989

FORM PAGE 1 OF 1
FORM SDSP-403
SDSP 13.3

FORM SDSP—403
FORM NIS—2 ATTACHMENT

1. (OWNER) TENNESSEE VALLEY AUTHORITY
NUCLEAR POWER

DATE 5-24-90

2. (PLANT) BROWNS FERRY NUCLEAR PLANT
P.O. BOX 2000
DECATUR, ALABAMA

SHEET [a] 247 OF 255

MR# 815978

3. WORK PERFORMED BY: TVA (COMPANY)
P.O. Box 2000 (ADDRESS)
Decature, Alabama (CITY AND STATE)

TYPE CODE SYMBOL STAMP [b] NA
AUTHORIZATION NO. [b] NA
EXPIRATION DATE [b] NA

4. IDENTIFICATION OF SYSTEM SYS 85, Control Rod Drive

5(A). APPLICATION CONSTRUCTION CODE Section III 19 74
EDITION with ADDENDA 1975 CODE CASE NA

5(B). APPLICATION EDITION OF SECTION XI UTILIZED FOR REPAIRS OR REPLACEMENTS: 1980

6(A). NAME OF COMPONENT(S) AND DESCRIPTION (INCLUDE SIZE, CAPACITY, MATERIAL, AND LOCATION AS NEEDED TO AID IN IDENTIFICATION)
BWR-6 CRD from Hartsville modified by GE for use at BFNP BWR-4

6(B). NAME OF MANUFACTURER GE
ADDRESS OF MANUFACTURER (IF KNOWN) UNKNOWN

6(C). MANUFACTURER'S SERIAL NUMBER A4808

6(D). NATIONAL BOARD NUMBER (IF APPLICABLE) N/A

6(E). OTHER IDENTIFICATION (SUBASSEMBLY NUMBER, HEAT NUMBER, ETC.)
2-CRD-85-4235

6(F). YEAR BUILT UNKNOWN CODE CLASS ☒ 1 ☐ 2

6(G). REPAIRED ☐ REPLACED ☒ [c] REPLACEMENT ☐ [d]

6(H). ASME CODE STAMPED YES ☒ NO ☐

7. BRIEF DESCRIPTION OF REPAIR OR REPLACEMENT WORK PERFORMED
Replaced BWR-4 CRD with modified BWR-6 CRD

8. TESTS CONDUCTED: HYDROSTATIC ☒ PNEUMATIC ☐
NOMINAL OPERATING PRESSURE ☐ OTHER ☐
PRESSURE 1158 PSI TEST TEMPERATURE 182 F°

9. REMARKS: Hydrostatic Test to be conducted during vessel hydro per 2-SI-3.3.1.B, REF. W.O. 90-08936-00

( ) APPLICABLE MANUFACTURERS DATA REPORT [e] TO BE ATTACHED.
RESPONSIBLE ENGR. Ernest L. Wallace * ORGANIZATION Section Chief DATE 5/24/90 M. Martin 7-3-91

ANII _____ DATE _____

* REF. CAQR # CHA890003713

[a] SHEET NOS. FILLED IN BY TESTING AND DIAGNOSTIC PROGRAMS BRANCH.
[b] FOR WORK PERFORMED BY CERTIFICATE HOLDER
[c] REPLACED (LIKE OR EQUIVALENT).
[d] REPLACEMENT (MODIFICATION).
[e] WHEN REQUIRED BY CONSTRUCTION CODE.

RETENTION PERIOD: LIFETIME RESPONSIBLE ORGANIZATION: NM—PROCESSES/SPECIAL PROGRAMS

TENNESSEE VALLEY AUTHORITY
BROWNS FERRY NUCLEAR PLANT
SITE DIRECTOR STANDARD PRACTICE

SEP 22 1989

FORM PAGE 1 OF 1
FORM SDSP-403
SDSP 13.3

FORM SDSP-403
FORM NIS-2 ATTACHMENT

1. (OWNER) TENNESSEE VALLEY AUTHORITY
NUCLEAR POWER
DATE 5-24-90

2. (PLANT) BROWNS FERRY NUCLEAR PLANT
P.O. BOX 2000
DECATUR, ALABAMA
SHEET [a] 248 OF 255

MR# 815979

3. WORK PERFORMED BY: TVA (COMPANY)
P.O. Box 2000 (ADDRESS)
Decature, Alabama (CITY AND STATE)
TYPE CODE SYMBOL STAMP [b] NA
AUTHORIZATION NO. [b] NA
EXPIRATION DATE [b] NA

4. IDENTIFICATION OF SYSTEM SYS 85, Control Rod Drive
5(A). APPLICATION CONSTRUCTION CODE Section III 19 74
EDITION with ADDENDA 1975 CODE CASE NA
5(B). APPLICATION EDITION OF SECTION XI UTILIZED FOR REPAIRS OR REPLACEMENTS: 1980
6(A). NAME OF COMPONENT(S) AND DESCRIPTION (INCLUDE SIZE, CAPACITY, MATERIAL, AND LOCATION AS NEEDED TO AID IN IDENTIFICATION)
BWR-6 CRD from Hartsville modified by GE for use at BFNP BWR-4
6(B). NAME OF MANUFACTURER GE
ADDRESS OF MANUFACTURER (IF KNOWN) UNKNOWN
6(C). MANUFACTURER'S SERIAL NUMBER A4623
6(D). NATIONAL BOARD NUMBER (IF APPLICABLE) N/A
6(E). OTHER IDENTIFICATION (SUBASSEMBLY NUMBER, HEAT NUMBER, ETC.)
2-CRD-85-4239
6(F). YEAR BUILT UNKNOWN CODE CLASS [X] 1 [ ] 2
6(G). REPAIRED [ ] REPLACED [X] [c] REPLACEMENT [ ] [d]
6(H). ASME CODE STAMPED YES [X] NO [ ]
7. BRIEF DESCRIPTION OF REPAIR OR REPLACEMENT WORK PERFORMED.
Replaced BWR-4 CRD with modified BWR-6 CRD
8. TESTS CONDUCTED: HYDROSTATIC [X] PNEUMATIC [ ]
NOMINAL OPERATING PRESSURE [ ] OTHER [ ]
PRESSURE 1158 PSI TEST TEMPERATURE 182 F
9. REMARKS: Hydrostatic Test to be conducted during vessel hydro per A-SI-2.2.1.B, REF W.O. 90-08936.00

( ) APPLICABLE MANUFACTURERS DATA REPORT [e] TO BE ATTACHED.
RESPONSIBLE ENGR. Scott L. Williams 5/24/90 DATE 5-24-90 ORGANIZATION M. Moulton 7-3-91 Tech Spt.
*
ANII DATE

* REF. CAQR# CHA 890003713

[a] SHEET NOS. FILLED IN BY TESTING AND DIAGNOSTIC PROGRAMS BRANCH.
[b] FOR WORK PERFORMED BY CERTIFICATE HOLDER
[c] REPLACED (LIKE OR EQUIVALENT).
[d] REPLACEMENT (MODIFICATION).
[e] WHEN REQUIRED BY CONSTRUCTION CODE.

RETENTION PERIOD: LIFETIME RESPONSIBLE ORGANIZATION: M-PROCESSES/SPECIAL PROGRAMS

TENNESSEE VALLEY AUTHORITY
BROWNS FERRY NUCLEAR PLANT
SITE DIRECTOR STANDARD PRACTICE

SEP 22 1989

FORM PAGE 1 OF 1
FORM SDSP-403
SDSP 13.3

FORM SDSP-403
FORM NIS-2 ATTACHMENT

1. (OWNER) TENNESSEE VALLEY AUTHORITY
NUCLEAR POWER
DATE 5-18-90

2. (PLANT) BROWNS FERRY NUCLEAR PLANT
P.O. BOX 2000
DECATUR, ALABAMA
SHEET [a] 249 OF 255
MRH 815980

3. WORK PERFORMED BY: TVA (COMPANY)
P.O. Box 2000 (ADDRESS)
Decature, Alabama (CITY AND STATE)
TYPE CODE SYMBOL STAMP [b] NA
AUTHORIZATION NO. [b] NA
EXPIRATION DATE [b] NA

4. IDENTIFICATION OF SYSTEM SYS 85, Control Rod Drive

5(A). APPLICATION CONSTRUCTION CODE Section III 19 74
EDITION with ADDENDA 1975 CODE CASE NA

5(B). APPLICATION EDITION OF SECTION XI UTILIZED FOR REPAIRS OR REPLACEMENTS: 1980

6(A). NAME OF COMPONENT(S) AND DESCRIPTION (INCLUDE SIZE, CAPACITY, MATERIAL, AND LOCATION AS NEEDED TO AID IN IDENTIFICATION)
BWR-6 CRD from Hartsville modified by GE for use at BFNP BWR-4

6(B). NAME OF MANUFACTURER GE
ADDRESS OF MANUFACTURER (IF KNOWN) UNKNOWN

6(C). MANUFACTURER'S SERIAL NUMBER A4638

6(D). NATIONAL BOARD NUMBER (IF APPLICABLE) N/A

6(E). OTHER IDENTIFICATION (SUBASSEMBLY NUMBER, HEAT NUMBER, ETC.)
2-CRD-85-4611 S/N A4638

6(F). YEAR BUILT UNKNOWN CODE CLASS ☒ 1 ☐ 2

6(G). REPAIRED ☐ REPLACED ☒ [c] REPLACEMENT ☐ [d]

6(H). ASME CODE STAMPED YES ☒ NO ☐

7. BRIEF DESCRIPTION OF REPAIR OR REPLACEMENT WORK PERFORMED.
Replaced BWR-4 CRD with modified BWR-6 CRD

8. TESTS CONDUCTED: HYDROSTATIC ☒ PNEUMATIC ☐
NOMINAL OPERATING PRESSURE ☐ OTHER ☐
PRESSURE 1158 PSI TEST TEMPERATURE 182 F°

9. REMARKS: Hydrostatic Test to be conducted during vessel hydro per 2-SI-3.3.1.B. REF. W.O. 90-08936-00

( ) APPLICABLE MANUFACTURERS DATA REPORT [e] TO BE ATTACHED. M. Martin 7-3-91
RESPONSIBLE ENGR. * Everett Williams / Tech Spt DATE 5/10/90
ORGANIZATION
ANII DATE

* REF. ~~W~~ CA QR A CHA 89000371 3 (6-27-90 MM)

[a] SHEET NOS. FILLED IN BY TESTING AND DIAGNOSTIC PROGRAMS BRANCH.
[b] FOR WORK PERFORMED BY CERTIFICATE HOLDER
[c] REPLACED (LIKE OR EQUIVALENT).
[d] REPLACEMENT (MODIFICATION).
[e] WHEN REQUIRED BY CONSTRUCTION CODE.

RETENTION PERIOD: LIFETIME RESPONSIBLE ORGANIZATION: NM-PROCESSES/SPECIAL PROGRAMS

3485 0751

TENNESSEE VALLEY AUTHORITY
BROWNS FERRY NUCLEAR PLANT
SITE DIRECTOR STANDARD PRACTICE

SEP 22 1989

FORM PAGE 1 OF 1
FORM SDSP-403
SDSP 13.3

FORM SDSP-403
FORM NIS-2 ATTACHMENT

1. (OWNER) TENNESSEE VALLEY AUTHORITY
NUCLEAR POWER

DATE 5-18-90

2. (PLANT) BROWNS FERRY NUCLEAR PLANT
P.O. BOX 2000
DECATUR, ALABAMA

SHEET [a] 250 OF 255

MRH 815981

3. WORK PERFORMED BY: TVA (COMPANY)
P.O. Box 2000 (ADDRESS)
Decature, Alabama (CITY AND STATE)

TYPE CODE SYMBOL STAMP [b] NA
AUTHORIZATION NO. [b] NA
EXPIRATION DATE [b] NA

4. IDENTIFICATION OF SYSTEM SYS 85, Control Rod Drive

5(A). APPLICATION CONSTRUCTION CODE Section III 19 74
EDITION with ADDENDA 1975 CODE CASE NA

5(B). APPLICATION EDITION OF SECTION XI UTILIZED FOR REPAIRS OR REPLACEMENTS: 1980

6(A). NAME OF COMPONENT(S) AND DESCRIPTION (INCLUDE SIZE, CAPACITY, MATERIAL, AND LOCATION AS NEEDED TO AID IN IDENTIFICATION)
BWR-6 CRD from Hartsville modified by GE for use at BFNP BWR-4

6(B). NAME OF MANUFACTURER GE
ADDRESS OF MANUFACTURER (IF KNOWN) UNKNOWN

6(c). MANUFACTURER'S SERIAL NUMBER A3828

6(D). NATIONAL BOARD NUMBER (IF APPLICABLE) N/A

6(E). OTHER IDENTIFICATION (SUBASSEMBLY NUMBER, HEAT NUMBER, ETC.)
2-CRD-85-4619 S/N - A3828

6(F). YEAR BUILT UNKNOWN CODE CLASS ☒ 1 ☐ 2

6(G). REPAIRED ☐ REPLACED ☒ [c] REPLACEMENT ☐ [d]

6(H). ASME CODE STAMPED YES ☒ NO ☐

7. BRIEF DESCRIPTION OF REPAIR OR REPLACEMENT WORK PERFORMED.
Replaced BWR-4 CRD with modified BWR-6 CRD.

8. TESTS CONDUCTED: HYDROSTATIC ☒ PNEUMATIC ☐
NOMINAL OPERATING PRESSURE ☐ OTHER ☐
PRESSURE 1158 PSI TEST TEMPERATURE 182 F°

9. REMARKS: Hydrostatic Test to be conducted during vessel hydro per 2-SI-3.3.1.B, REF. W.O. 90-08936-00J

( ) APPLICABLE MANUFACTURERS DATA REPORT [e] TO BE ATTACHED.
RESPONSIBLE ENGR. * Ernest F. Williams Test Spt. DATE 5/18/90 M. Martin 7-3-91
ORGANIZATION
AND DATE

* REF. CAQR# CHA 890003713

[a] SHEET NOS. FILLED IN BY TESTING AND DIAGNOSTIC PROGRAMS BRANCH.
[b] FOR WORK PERFORMED BY CERTIFICATE HOLDER
[c] REPLACED (LIKE OR EQUIVALENT).
[d] REPLACEMENT (MODIFICATION).
[e] WHEN REQUIRED BY CONSTRUCTION CODE.

RETENTION PERIOD: LIFETIME RESPONSIBLE ORGANIZATION: NM-PROCESSES/SPECIAL PROGRAMS

TENNESSEE VALLEY AUTHORITY
BROWNS FERRY NUCLEAR PLANT
SITE DIRECTOR STANDARD PRACTICE

SEP 22 1989

FORM PAGE 1 OF 1
FORM SDSP-403
SDSP 13.3

FORM SDSP-403
FORM NIS-2 ATTACHMENT

1. (OWNER) TENNESSEE VALLEY AUTHORITY
NUCLEAR POWER
DATE 5-24-90

2. (PLANT) BROWNS FERRY NUCLEAR PLANT
P.O. BOX 2000
DECATUR, ALABAMA
SHEET [a] 251 OF 255
MR# 815482

3. WORK PERFORMED BY: TVA (COMPANY)
TYPE CODE SYMBOL STAMP [b] NA
P.O. Box 2000 (ADDRESS)
AUTHORIZATION NO. [b] NA
Decature, Alabama (CITY AND STATE)
EXPIRATION DATE [b] NA

4. IDENTIFICATION OF SYSTEM SYS 85, Control Rod Drive

5(A). APPLICATION CONSTRUCTION CODE Section III 19 74
EDITION with ADDENDA 1975 CODE CASE NA

5(B). APPLICATION EDITION OF SECTION XI UTILIZED FOR REPAIRS OR REPLACEMENTS: 1980

6(A). NAME OF COMPONENT(S) AND DESCRIPTION (INCLUDE SIZE, CAPACITY, MATERIAL, AND LOCATION AS NEEDED TO AID IN IDENTIFICATION)
BWR-6 CRD from Hartsville modified by GE for use at BFNP BWR-4.

6(B). NAME OF MANUFACTURER GE
ADDRESS OF MANUFACTURER (IF KNOWN) UNKNOWN

6(C). MANUFACTURER'S SERIAL NUMBER BWR-6 A4481

6(D). NATIONAL BOARD NUMBER (IF APPLICABLE) N/A

6(E). OTHER IDENTIFICATION (SUBASSEMBLY NUMBER, HEAT NUMBER, ETC.)
2-CRD-85-4639

6(F). YEAR BUILT NA, UNKNOWN CODE CLASS ☒ 1 ☐ 2

6(G). REPAIRED ☐ REPLACED ☒ [c] REPLACEMENT ☐ [d]

6(H). ASME CODE STAMPED YES ☒ NO ☐

7. BRIEF DESCRIPTION OF REPAIR OR REPLACEMENT WORK PERFORMED.
Replaced BWR-4 CRD with modified BWR-6 CRD

8. TESTS CONDUCTED: HYDROSTATIC ☒ PNEUMATIC ☐
NOMINAL OPERATING PRESSURE ☐ OTHER ☐
PRESSURE 1158 PSI TEST TEMPERATURE 182 F°

9. REMARKS: Hydrostatic Test to be conducted during vessel hydro per 2-SI-3.3.1.B REF W.O. 90-08936-00

( ) APPLICABLE MANUFACTURERS DATA REPORT [e] TO BE ATTACHED
M. Martin 7-3-91
RESPONSIBLE ENGR. Ernest L. Williams Tech. Spec. DATE 5/24/90
ORGANIZATION
*
ANII DATE

* REF. CAQR# CHA 890003713

[a] SHEET NOS. FILLED IN BY TESTING AND DIAGNOSTIC PROGRAMS BRANCH.
[b] FOR WORK PERFORMED BY CERTIFICATE HOLDER
[c] REPLACED (LIKE OR EQUIVALENT).
[d] REPLACEMENT (MODIFICATION).
[e] WHEN REQUIRED BY CONSTRUCTION CODE.

RETENTION PERIOD: LIFETIME RESPONSIBLE ORGANIZATION: NM-PROCESSES/SPECIAL PROGRAMS

TENNESSEE VALLEY AUTHORITY
BROWNS FERRY NUCLEAR PLANT
SITE DIRECTOR STANDARD PRACTICE

SEP 22 1989

FORM SDSP-403
FORM NIS-2 ATTACHMENT

1. (OWNER) TENNESSEE VALLEY AUTHORITY
NUCLEAR POWER
DATE 5-18-90

2. (PLANT) BROWNS FERRY NUCLEAR PLANT
P.O. BOX 2000
DECATUR, ALABAMA
SHEET [a] 252 OF 255
MR# 815983

3. WORK PERFORMED BY: TVA (COMPANY)
P.O. Box 2000 (ADDRESS)
Decature, Alabama (CITY AND STATE)
TYPE CODE SYMBOL STAMP [b] NA
AUTHORIZATION NO. [b] NA
EXPIRATION DATE [b] NA

4. IDENTIFICATION OF SYSTEM SYS 85, Control Rod Drive

5(A). APPLICATION CONSTRUCTION CODE "Section III" 19 74
EDITION with ADDENDA 1975 CODE CASE NA

5(B). APPLICATION EDITION OF SECTION XI UTILIZED FOR REPAIRS OR REPLACEMENTS: 1980

6(A). NAME OF COMPONENT(S) AND DESCRIPTION (INCLUDE SIZE, CAPACITY, MATERIAL, AND LOCATION AS NEEDED TO AID IN IDENTIFICATION)
BWR-6 CRD from Hartsville modified by GE for use at BFNP BWR-4

6(B). NAME OF MANUFACTURER GE
ADDRESS OF MANUFACTURER (IF KNOWN) UNKNOWN

6(c). MANUFACTURER'S SERIAL NUMBER A4822

6(D). NATIONAL BOARD NUMBER (IF APPLICABLE) N/A

6(E). OTHER IDENTIFICATION (SUBASSEMBLY NUMBER, HEAT NUMBER, ETC.)
2-CRD-85-4643 Serial # A4822

6(F). YEAR BUILT UNKNOWN CODE CLASS [X] 1 [ ] 2

6(G). REPAIRED [ ] REPLACED [X] [c] REPLACEMENT [ ] [d]

6(H). ASME CODE STAMPED YES [X] NO [ ]

7. BRIEF DESCRIPTION OF REPAIR OR REPLACEMENT WORK PERFORMED.
Replaced BWR-4 CRD with modified BWR-6 CRD.

8. TESTS CONDUCTED: HYDROSTATIC [X] PNEUMATIC [ ]
NOMINAL OPERATING PRESSURE [ ] OTHER [ ]
PRESSURE 1158 PSI TEST TEMPERATURE 182 F°

9. REMARKS: Hydrostatic Test to be conducted during vessel hydro per A-SI-2.2.1.B. REF. W.O. 90-08936-000

( ) APPLICABLE MANUFACTURERS DATA REPORT [e] TO BE ATTACHED. M. Mantay 7-3-91
RESPONSIBLE ENGR. * Emil E. Wilhoit Mech Sys DATE 5/18/90
ORGANIZATION
ANII DATE

* REF. CAQR# CHA 890003713

[a] SHEET NOS. FILLED IN BY TESTING AND DIAGNOSTIC PROGRAMS BRANCH.
[b] FOR WORK PERFORMED BY CERTIFICATE HOLDER
[c] REPLACED (LIKE OR EQUIVALENT).
[d] REPLACEMENT (MODIFICATION).
[e] WHEN REQUIRED BY CONSTRUCTION CODE.

RETENTION PERIOD: LIFETIME RESPONSIBLE ORGANIZATION: NM-PROCESSES/SPECIAL PROGRAMS

TENNESSEE VALLEY AUTHORITY
BROWNS FERRY NUCLEAR PLANT
SITE DIRECTOR STANDARD PRACTICE

SEP 22 1989

FORM PAGE 1 OF 1
FORM SDSP-403
SDSP 13.3

FORM SDSP-403
FORM NIS-2 ATTACHMENT

1. (OWNER) TENNESSEE VALLEY AUTHORITY
NUCLEAR POWER

DATE 5-18-90

2. (PLANT) BROWNS FERRY NUCLEAR PLANT
P.O. BOX 2000
DECATUR, ALABAMA

SHEET [a] 253 OF 255

MR# 815984

3. WORK PERFORMED BY: TVA
COMPANY

TYPE CODE SYMBOL STAMP [b] NA

P.O. Box 2000
ADDRESS

AUTHORIZATION NO. [b] NA

Decature, Alabama
CITY AND STATE

EXPIRATION DATE [b] NA

4. IDENTIFICATION OF SYSTEM SYS 85, Control Rod Drive

5(A). APPLICATION CONSTRUCTION CODE Section III 19 74
EDITION with ADDENDA 1975 CODE CASE NA

5(B). APPLICATION EDITION OF SECTION XI UTILIZED FOR REPAIRS OR REPLACEMENTS: 1980

6(A). NAME OF COMPONENT(S) AND DESCRIPTION (INCLUDE SIZE, CAPACITY, MATERIAL, AND LOCATION AS NEEDED TO AID IN IDENTIFICATION)
BWR-6 CRD from Hartsville modified by GE for use at BFNP BWR-4

6(B). NAME OF MANUFACTURER GE
ADDRESS OF MANUFACTURER (IF KNOWN) UNKNOWN

6(c). MANUFACTURER'S SERIAL NUMBER A 3806

6(D). NATIONAL BOARD NUMBER (IF APPLICABLE) N/A

6(E). OTHER IDENTIFICATION (SUBASSEMBLY NUMBER, HEAT NUMBER, ETC.)
2-CRD-85-4647 serial # A3806

6(F). YEAR BUILT UNKNOWN. CODE CLASS ☒ 1 ☐ 2

6(G). REPAIRED ☐ REPLACED ☒ [c] REPLACEMENT ☐ [d]

6(H). ASME CODE STAMPED YES ☒ NO ☐

7. BRIEF DESCRIPTION OF REPAIR OR REPLACEMENT WORK PERFORMED.
Replaced BWR-4 CRD with modified BWR-6 CRD

8. TESTS CONDUCTED: HYDROSTATIC ☒ PNEUMATIC ☐
NOMINAL OPERATING PRESSURE ☐ OTHER ☐
PRESSURE 1158 PSI TEST TEMPERATURE 182 F°

9. REMARKS: Hydrostatic Test - to be conducted during vessel hydro per A-SI-3.3.1.A, REF. W.O. 90-08936-00J

( ) APPLICABLE MANUFACTURERS DATA REPORT [e] TO BE ATTACHED. M. Mayer 7-3-91
RESPONSIBLE ENGR. Ernest F. Williams Tech Spt. DATE 5/18/90
ORGANIZATION
*

ANII _____ DATE _____

* REF CAQR# CHA 890003713

[a] SHEET NOS. FILLED IN BY TESTING AND DIAGNOSTIC PROGRAMS BRANCH.
[b] FOR WORK PERFORMED BY CERTIFICATE HOLDER
[c] REPLACED (LIKE OR EQUIVALENT).
[d] REPLACEMENT (MODIFICATION).
[e] WHEN REQUIRED BY CONSTRUCTION CODE.

RETENTION PERIOD: LIFETIME RESPONSIBLE ORGANIZATION: NUCLEAR PROCESS ES/SPECIAL PROGRAMS

TENNESSEE VALLEY AUTHORITY
BROWNS FERRY NUCLEAR PLANT
SITE DIRECTOR STANDARD PRACTICE

SEP 22 1989

FORM PAGE 1 OF 1
FORM SDSP-403
SDSP 13.3

FORM SDSP-403
FORM NIS-2 ATTACHMENT

1. (OWNER) TENNESSEE VALLEY AUTHORITY
NUCLEAR POWER

DATE 5-18-90

2. (PLANT) BROWNS FERRY NUCLEAR PLANT
P.O. BOX 2000
DECATUR, ALABAMA

SHEET [a] 254 OF 255

MR# 815985

3. WORK PERFORMED BY: TVA
COMPANY

TYPE CODE SYMBOL STAMP [b] NA

P.O. Box 2000
ADDRESS

AUTHORIZATION NO. [b] NA

Decature, Alabama
CITY AND STATE

EXPIRATION DATE [b] NA

4. IDENTIFICATION OF SYSTEM SYS 85, Control Rod Drive

5(A). APPLICATION CONSTRUCTION CODE Section III 19 74
EDITION with ADDENDA 1975 CODE CASE NA

5(B). APPLICATION EDITION OF SECTION XI UTILIZED FOR REPAIRS OR REPLACEMENTS: 1980

6(A). NAME OF COMPONENT(S) AND DESCRIPTION (INCLUDE SIZE, CAPACITY, MATERIAL, AND LOCATION AS NEEDED TO AID IN IDENTIFICATION)
BWR-6 CRD from Hartsville modified by GE for use at BFNP BWR-4

6(B). NAME OF MANUFACTURER GE
ADDRESS OF MANUFACTURER (IF KNOWN) UNKNOWN

6(C). MANUFACTURER'S SERIAL NUMBER A3862

6(D). NATIONAL BOARD NUMBER (IF APPLICABLE) N/A

6(E). OTHER IDENTIFICATION (SUBASSEMBLY NUMBER, HEAT NUMBER, ETC.)
2-CRD-85-1501S Serial # A3862

6(F). YEAR BUILT UNKNOWN CODE CLASS ☒ 1 ☐ 2

6(G). REPAIRED ☐ REPLACED ☒ [c] REPLACEMENT ☐ [d]

6(H). ASME CODE STAMPED YES ☒ NO ☐

7. BRIEF DESCRIPTION OF REPAIR OR REPLACEMENT WORK PERFORMED.
Replaced BWR-4 CRD with modified BWR-6 CRD

8. TESTS CONDUCTED: HYDROSTATIC ☐ PNEUMATIC ☐
NOMINAL OPERATING PRESSURE ☐ OTHER ☐
PRESSURE 1158 PSI TEST TEMPERATURE 182 F°

9. REMARKS: Hydrostatic Test to be conducted during vessel hydro per A-SI-2.2.1.R. REF. W.O. 90-0893600

( ) APPLICABLE MANUFACTURERS DATA REPORT [e] TO BE ATTACHED. M. Martin 7-3-91
RESPONSIBLE ENGR. * Everett L. Williams Tech Spt. DATE 5/18/90
ORGANIZATION

ANII _____ DATE _____

* REF. CAQR# CHA 890003713

[a] SHEET NOS. FILLED IN BY TESTING AND DIAGNOSTIC PROGRAMS BRANCH.
[b] FOR WORK PERFORMED BY CERTIFICATE HOLDER
[c] REPLACED (LIKE OR EQUIVALENT).
[d] REPLACEMENT (MODIFICATION).
[e] WHEN REQUIRED BY CONSTRUCTION CODE.

RETENTION PERIOD: LIFETIME RESPONSIBLE ORGANIZATION: NM-PROCESSES/SPECIAL PROGRAMS

TENNESSEE VALLEY AUTHORITY
BROWNS FERRY NUCLEAR PLANT
SITE DIRECTOR STANDARD PRACTICE

SEP 22 1989

FORM SDSP-403
FORM NIS-2 ATTACHMENT

1. (OWNER) TENNESSEE VALLEY AUTHORITY
NUCLEAR POWER

DATE 5-19-90

2. (PLANT) BROWNS FERRY NUCLEAR PLANT
P.O. BOX 2000
DECATUR, ALABAMA

SHEET [a] 255 OF 255

MR# 815985

3. WORK PERFORMED BY: TVA (COMPANY)
P.O. Box 2000 (ADDRESS)
Decature, Alabama (CITY AND STATE)

TYPE CODE SYMBOL STAMP [b] NA
AUTHORIZATION NO. [b] NA
EXPIRATION DATE [b] NA

4. IDENTIFICATION OF SYSTEM SYS 85, Control Rod Drive

5(A). APPLICATION CONSTRUCTION CODE Section III 19 74
EDITION with ADDENDA 1975 CODE CASE NA

5(B). APPLICATION EDITION OF SECTION XI UTILIZED FOR REPAIRS OR REPLACEMENTS: 1980

6(A). NAME OF COMPONENT(S) AND DESCRIPTION (INCLUDE SIZE, CAPACITY, MATERIAL, AND LOCATION AS NEEDED TO AID IN IDENTIFICATION)
BWR-6 CRD from Hartsville modified by GE for use at BFNP BWR-4

6(B). NAME OF MANUFACTURER GE
ADDRESS OF MANUFACTURER (IF KNOWN) UNKNOWN

6(C). MANUFACTURER'S SERIAL NUMBER A4824

6(D). NATIONAL BOARD NUMBER (IF APPLICABLE) N/A

6(E). OTHER IDENTIFICATION (SUBASSEMBLY NUMBER, HEAT NUMBER, ETC.)
2-CRD-85-5019 S/N - A4824

6(F). YEAR BUILT UNKNOWN CODE CLASS ☒ 1 ☐ 2

6(G). REPAIRED ☐ REPLACED ☒ [c] REPLACEMENT ☐ [d]

6(H). ASME CODE STAMPED YES ☒ NO ☐

7. BRIEF DESCRIPTION OF REPAIR OR REPLACEMENT WORK PERFORMED.
Replaced BWR-4 CRD with modified BWR-6 CRD

8. TESTS CONDUCTED: HYDROSTATIC ☒ PNEUMATIC ☐
NOMINAL OPERATING PRESSURE ☐ OTHER ☐
PRESSURE 1158 PSI TEST TEMPERATURE 182 F°

9. REMARKS: Hydrostatic Test to be conducted during vessel hydro per A-SI-2.2.1.B, REF. W.O. 90-08936-00

( ) APPLICABLE MANUFACTURERS DATA REPORT [e] TO BE ATTACHED

RESPONSIBLE ENGR. Ernest L. Williams Tech Sp M. Marsden 7-3-91 DATE 5/15/90
ORGANIZATION

ANII _____ DATE _____

X REF. CAQR# CHA 890003713

[a] SHEET NOS. FILLED IN BY TESTING AND DIAGNOSTIC PROGRAMS BRANCH.
[b] FOR WORK PERFORMED BY CERTIFICATE HOLDER
[c] REPLACED (LIKE OR EQUIVALENT).
[d] REPLACEMENT (MODIFICATION).
[e] WHEN REQUIRED BY CONSTRUCTION CODE.

RETENTION PERIOD: LIFETIME RESPONSIBLE ORGANIZATION: NM—PROCESSES/SPECIAL PROGRAMS