REGULATORY INFORMATION DISTRIBUTION SYSTEM (RIDS)

ACCESSION NBR:8303220117 DOC.DATE: 83/03/10 NOTARIZED: NO DOCKET #
FACIL:50-387 Susquehanna Steam Electric Station, Unit 1, Pennsylva 05000387
50-388 Susquehanna Steam Electric Station, Unit 2, Pennsylva 05000388
AUTH.NAME AUTHOR AFFILIATION
MOLCHENY,W.J. Pennsylvania Power & Light Co.
RECIP.NAME RECIPIENT AFFILIATION
SCHWENCER,A. Licensing Branch 2

SUBJECT: Forwards 187 oversize updated drawings,per Reg Guide 1.70. Aperture cards are available in PDR.Drawing transmittal list encl.

DISTRIBUTION CODE: B001S COPIES RECEIVED:LTR 1 ENCL 1 SIZE: 10+187
TITLE: Licensing Submittal: PSAR/FSAR Amdts & Related Correspondence

NOTES:1cy NMSS/FCAF/PM. 05000387
1cy NMSS/FCAF/PM. 05000388

	RECIPIENT ID CODE/NAME		COPIES LTTR	COPIES ENCL	RECIPIENT ID CODE/NAME		COPIES LTTR	COPIES ENCL
	NRR/DL/ADL		1	0	NRR LB2 BC		1	0
	NRR LB2 LA		1	0	PERCH,R.	01	1	1
INTERNAL:	ELD/HDS4		1	0	IE FILE		1	1
	IE/DEP EPDS	35	1	1	IE/DEP/EPLB	36	3	3
	NRR/DE/AEAB		1	0	NRR/DE/CEB	11	1	1
	NRR/DE/EQB	13	2	2	NRR/DE/GB	28	2	2
	NRR/DE/HGEB	30	1	1	NRR/DE/MEB	18	1	1
	NRR/DE/MTEB	17	1	1	NRR/DE/QAB	21	1	1
	NRR/DE/SAB	24	1	1	NRR/DE/SEB	25	1	1
	NRR/DHFS/HFEB	40	1	1	NRR/DHFS/LQB	32	1	1
	NRR/DL/SSPB		1	0	NRR/DSI/AEB	26	1	1
	NRR/DSI/ASB		1	1	NRR/DSI/CPB	10	1	1
	NRR/DSI/CSB	09	1	1	NRR/DSI/ICSB	16	1	1
	NRR/DSI/METB	12	1	1	NRR/DSI/PSB	19	1	1
	NRR/DSI/RAB	22	1	1	NRR/DSI/RSB	23	1	1
	REG FILE	04	1	1	RGN1		3	3
	~~RM/DDAMI/MIB~~		1	0				
EXTERNAL:	ACRS	41	6	6	BNL(AMDTS ONLY)		1	1
	DMB/DSS (AMDTS)		1	1	FEMA-REP DIV	39	1	1
	LPDR	03	2	2	NRC PDR	02	1	1
	NSIC	05	1	1	NTIS		1	1
NOTES:			1	1				

Aperture Card Dist
NRR55. to Reg File

TOTAL NUMBER OF COPIES REQUIRED: LTTR 54 ENCL 47

PP&L FORM 3005 (9/79)

DOCKET NO. 50-387/388

Pennsylvania Power & Light Company
Two North Ninth Street
Allentown, PA 18101
Nuclear Records Receipt - A1-B
Susquehanna SES Units 1 & 2

TO: ~~Project Manager~~ DIRECTOR NUCLEAR REACTOR REGULATION
~~Job 8856 - Susquehanna SES~~ ATTN: Mr. A. SCHWENCER CHIEF
~~ATTN: Project Administration~~
~~Bechtel Power Corporation~~ LICENSING BRANCH NO. 2
~~P.O. Box 3965~~ DIV. OF LICENSING
~~San Francisco, CA 94119~~ U.S. NUCLEAR REGULATORY COMMISSION
WASHINGTON D.C. 20555

Date: March 10, 1983

*PTB No.: 461 Rev.: ____

Sheet: 1 Of: 1

Transmittal Is For:

- ☐ Original Drawings Being Returned To Bechtel For Revision.
- ☐ Documents Being Returned Because Of Errors Or Poor Quality.
- ☐ List Of Documents Being Requested For Resubmittal.
- ☐ Other: ____

Qnty.	PP&L No.-Pg.	Bechtel No.	Vendor	Rev.	Title
	See copy of attached Table 1.7-1				
	UPDATED DRAWINGS PER REG GUIDE 1.70				

Aperture Card Dist
B001 Drawings
To: Reg File

*PTB - PP&L Transmittal to Bechtel

PP&L Nuclear Records Receipt A1-B
By:

William J. Melchany Jr.
2N. 9th Street
Allentown, Pa. 18101
Attn: Document Control Center
A6-2

8303220117 830310
PDR ADOCK 05000387
P PDR

PP&L FORM 3005 (9/79)

DOCKET NO. 50-387/388

Pennsylvania Power & Light Company
Two North Ninth Street
Allentown, PA 18101
Nuclear Records Receipt - A1-B
Susquehanna SES Units 1 & 2

TO: ~~Project Manager~~ DIRECTOR NUCLEAR REACTOR REGULATION
~~Job-8856 - Susquehanna SES~~ ATTN: MR. A. SCHWENCER CHIEF
~~ATTN: Project Administration~~
~~Bechtel Power Corporation~~ LICENSING BRANCH NO. 2
~~P.O. Box 3965~~
~~San Francisco, CA 94119~~ DIV. OF LICENSING
U.S. NUCLEAR REGULATORY COMMISSION
WASHINGTON D.C. 20555

Date: March 18 1983

*PTB No.: 461 Rev.: ____

Sheet: 1 Of: 1

Transmittal Is For:

- ☐ Original Drawings Being Returned To Bechtel For Revision.
- ☐ Documents Being Returned Because Of Errors Or Poor Quality.
- ☐ List Of Documents Being Requested For Resubmittal.
- ☐ Other: _____

Qnty.	PP&L No.-Pg.	Bechtel No.	Vendor	Rev.	Title
	See cover of attached Table 1.7-1				
	UPDATED DRAWINGS PER REG GUIDE 1.70				

*PTB - PP&L Transmittal to Bechtel

Confirmation Of Bechtel Receipt
By: _____

PP&L Nuclear Records Receipt A1-B
By: William D. Mahanna Jr.
2N. 9th Street
Allentown, Pa. 18101
Attn: Document Control Center
A6-2

Return to: PP&L Nuclear Records Receipt A1-B

TABLE 1.7-1 (Continued)

Drawing No.	File No.	Title	Rev.	Date
E-156 Sh. 2	D-107305	Core Spray Pump 1B Unit 1	#14	7/28/81
E-156 Sh. 3	D-107305	Core Spray Pump 1C Unit 1	#15	7/31/81
E-156 Sh. 4	D-107305	Core Spray Pump 1D Unit 1	#16	8/29/81
E-156 Sh. 5	D-107305	Core Spray Pump 2A Unit 2	#9	8/31/81
E-156 Sh. 6	D-107305	Core Spray Pump 2B Unit 2	#8	7/27/81
E-156 Sh. 7	D-107305	Core Spray Pump 2C Unit 2	#10	7/22/81
E-156 Sh. 8	D-107306	Core Spray Pump 2D Unit 2	#10	7/22/81
E-157 Sh. 1	D-107306	Reactor Protection System PWR Dist Unit 1	#9	8/3/81
E-157 Sh. 2	D-107306	Reactor Protection System Trip CKTS & RPS Vlvs Unit 1	7/11	7/1/81
E-157 Sh. 3	D-107306	Reactor Protection System Trip Signal To HCU's Unit 1	#6	7/22/81
E-157 Sh. 4	D-107306	Reactor Protection System PWR Dist Unit 2	3/9	8/30/78
E-157 Sh. 5	D-107306	Reactor Protection System Trip CKTS & RPS Vlvs Unit 2	7/8	12/1/80
E-157 Sh. 6	D-107306	Reactor Protection System Trip Sig to HCU Unit 2	3	12/1/80
E-159 Sh. 6	D-107308	Liquid Radw Coll Drywell Floor Drain Sump Isolation Valves Unit 1	#17	11/28/79
E-159 Sh. 8	D-107308	Liquid Radw Coll. Drywell Equip Drain Tank ISO Valves A1 Unit 1	7/12	7/28/81
E-159 Sh. 9	D-107308	Liquid Radw Coll Drywell Equip Drain Tank ISO Valve A2 Unit 1	5/11	7/27/81
E-159 Sh. 14	D-107308	Liquid Radw Coll Drywell Floor Drain Sump Isolation Valves Unit 2	5/9	9/15/81
E-159 Sh. 16	D-107308	Liquid Radw Coll Drywell Equip Drain Tank ISO Valves A1 Unit 2	4/8	9/15/81
E-159 Sh. 17	D-107308	Liquid Radw Coll Drywell Equip Drain Tank ISO Valve A2 Unit 2	4/7	9/15/81
E-165 Sh. 4	D-107314	Reactor Wtr Cleanup System-MOV-Unit 1	#6	8/27/81

completed 3-2-83

TABLE 1.7-1 (Continued)

Drawing No.	File No.	Title	Rev.	Date
E-165 Sh. 5	D-107314	Reactor Wtr Cleanup System-Inst. CKT. Unit 1	#6	5/12/81
E-165 Sh. 6	D-107314	Reactor Wtr Cleanup System-Inbd Iso VLV(Unit 1)	#12	7/30/81
E-165 Sh. 7	D-107314	Reactor Wtr Cleanup System-Outbd Iso VLV (Unit 1)	#12	2/30/81
E-165 Sh. 14	D-107314	Reactor Wtr Cleanup System-Inst. CKT. Unit 162	#3	5/12/81
E-165 Sh. 15	D-107314	Reactor Wtr Cleanup System-Inbd Iso Vlv Unit 2	#5	2/2/81
E-165 Sh. 16	D-107314	Reactor Wtr Cleanup System-Outbd Iso Vlv Unit 2	#7	2/2/81
E-166 Sh. 1	D-107315	Standby Liquid Control System Unit 1	#10	8/26/81
E-166 Sh. 2	D-107315	Standby Liquid Control System Unit 1	#11	9/15/81
E-166 Sh. 3	D-107315	Standby Liquid Control SYstem Unit 1	#7	6/12/80
E-166 Sh. 4	D-107315	Standby Liquid Control System Unit 1	#8	11/12/80
E-166 Sh. 5	D-107315	Standby Liquid Control System Unit 2	#8	4/27/81
E-166 Sh. 6	D-107315	Standby Liquid Control System Unit 2	#9	6/4/81
E-166 Sh. 7	D-107315	Standby Liquid Control System Unit 2	#7	6/12/80
E-166 Sh. 8	D-107315	Standby Liquid Control System Unit 2	#8	11/21/80
E-168 Sh. 1	D-107317	Steam Leak Detection Sys Unit 1	#4	7/28/81
E-168 Sh. 2	D-107317	Steam Leak Detection Sys Unit 1	#4	7/30/81
E-168 Sh. 3	D-107317	Steam Leak Detection Sys Unit 2	#1	3/7/77
E-168 Sh. 4	D-107317	Steam Leak Detection Sys Unit 2	#1	3/7/77
E-169 Sh. 1	D-107318	Control Rod Drive Pump 1A Unit 1	#15	7/31/81
E-169 Sh. 2	D-107318	Control Rod Drive Pump 1B Unit 1	#14	7/31/81
E-169 Sh. 4	D-107318	CRD Hydraulic System Unit 1	#6	10/8/80
E-169 Sh. 6	D-107318	Control Rod Drive Pump 2A Unit 2	#10	8/6/81
E-169 Sh. 7	D-107318	Control Rod Drive Pump 2B Unit 2	#10	7/21/81
E-169 Sh. 9	D-107318	CRD Hydraulic System Press Throt. Vlvs	#4	3/17/78

Completed 3-3-83

TABLE 1.7-1 (Continued)

Drawing No.	File No.	Title	Rev.	Date
E-170 Sh. 1	D-107319	Nuclear Steam Supply Shutoff System Isolation Logic Unit 1	#10	11/12/80
E-170 Sh. 2	D-107319	NSSSS Main Stm Line Drain Iso Valve Unit 1	#6	6/16/80
E-170 Sh. 3	D-107319	NSSSS Main Stm Line Iso Valve Unit 1	#11	7/31/81
E-170 Sh. 4	D-107319	NSSSS Isolation Logic Unit 2	#6	8/18/77
E-170 Sh. 5	D-107319	NSSSS Main Stm Line Drain Iso Valve Unit 2	#04	8/18/77
E-170 Sh. 6	D-107319	NSSSS Main Stm Line Iso Valve Unit 2	#6	2/25/81
E-170 Sh. 7	D-107319	NSSSS Main Stm Inboard Iso Valve Indication Unit 2	#3	9/8/81
E-170 Sh. 8	D-107319	NSSSS Main Stm Inbd Iso Vlv Indication Unit 1	#3	1/31/79
E-171 Sh. 1	D-107320	Containment Atmospheric Control Suppression Pool Vacu Relief Unit 1	#9	7/25/81
E-171 Sh. 2	D-107320	Containment Atmospheric Control Suppression Pool Vacu Relief Unit 1	#9	7/25/81
E-171 Sh. 3	D-107320	Containment Atmospheric Control Process and And Pneumatic Iso Valves Unit 1	#15	8/3/81
E-171 Sh. 4	D-107320	Containment Atmospheric Control Atmospheric Monitoring Vlvs Unit 1	#16	8/3/81
E-171 Sh. 5	D-107320	Containment Atmospheric Control Contn. Isolation Valve Unit 1	#11	7/3/81
E-171 Sh. 6	D-107320	Containment Atmospheric Control Contn. Outbd Iso Vlv. Unit 1	#12	6/22/81
E-171 Sh. 7	D-107320	Suppression Pool Water Filter Pump Unit 1	7 9	7/30/81
E-171 Sh. 8	D-107320	Contn. Atmos Control-Isolation Logic & SGTS Isolation Valves Unit 1	#16	8/3/81
E-171 Sh. 9	D-107320	Contn. Atmos Cont Nitrogen Makeup & SGTS Bypass Valve Unit 1	#15	8/3/81
E-171 Sh. 10	D-107320	Containment Atmosphere Control Suppression Pool Vac Relief Unit 2	#5	10/16/80
E-171 Sh. 11	D-107320	Containment Atmosphere Control Suppression	#5	10/16/80

BJP-53567

completed 3-8-93

TABLE 1.7-1 (Continued)

Drawing No.	File No.	Title	Rev.	Date
E-176 Sh. 2	D-107325	Process Radiation Monitoring System Unit 2	14	4/10/80
E-177 Sh. 1	D-107326	Neutron Monitoring System Unit 1	13	9/19/77
E-177 Sh. 2	D-107326	Neutron Monitoring System Unit 1	14	4/17/80
E-177 Sh. 3	D-107326	Neutron Monitoring System Unit 1	15	7/27/81
E-177 Sh. 4	D-107326	Neutron Monitoring System Unit 1	17	9/10/81
E-177 Sh. 5	D-107326	Neutron Monitoring System Unit 2	01	8/23/77
E-177 Sh. 6	D-107326	Neutron Monitoring System Unit 2	02	8/23/77
E-177 Sh. 7	D-107326	Neutron Monitoring System Unit 2	12	4/6/78
E-177 Sh. 8	D-107326	Neutron Monitoring System Unit 2	2	6/17/81
E-178 Sh. 1	D-107327	Excess Flow Check Valves Unit 1	07	7/30/81
E-178 Sh. 2	D-107327	Excess Flow Check Valves Unit 1 BFP. 20359	1	12/15/77
E-178 Sh. 3	D-107327	Excess Flow Check Valves Unit 1	04	1/20/80
E-178 Sh. 4	D-107327	Excess Flow Check Valves Unit 1	3	3/31/80
E-178 Sh. 5	D-107327	Excess Flow Check Valves Unit 1 BFP. 20359	1	12/15/77
E-178 Sh. 6	D-107327	Excess Flow Check Valves Unit 1 BFP. 15387	3	10/4/78
E-178 Sh. 7	D-107327	Excess Flow Check Valves Unit 1	3	7/27/81
E-178 Sh. 8	D-107327	Excess Flow Check Valves Unit 2	04	11/24/80
E-178 Sh. 9	D-107327	Excess Flow Check Valves Unit 2	13	12/15/77
E-178 Sh. 10	D-107327	Excess Flow Check Valves Unit 2	18	3/31/78
E-178 Sh. 11	D-107327	Excess Flow Check Valves Unit 2	15	12/15/77
E-178 Sh. 12	D-107327	Excess Flow Check Valves Unit 2	14	12/15/77
E-178 Sh. 13	D-107327	Excess Flow Check Valves Unit 2	17	10/4/78
E-178 Sh. 14	D-107327	Excess Flow Check Valves Unit 2	16	12/15/77
E-180 Sh. 1	D-107329	ADS Safety Valves Unit 1	09	11/3/80
E-180 Sh. 2	D-107329	ADS Safety Valves Unit 1	07	7/23/81

completed 3-5-83

TABLE 1.7-1 (Continued)

Drawing No.	File No.	Title	Rev.	Date
E-180 Sh. 3	D-107329	ADS Control & Power Dist Unit 1	5	8/31/81
E-180 Sh. 4	D-107329	Safety Relief Valves Unit 2	4	10/17/77
E-180 Sh. 5	D-107329	ADS and Safety Relief Valves Unit 2	3	1/9/78
E-180 Sh. 6	D-107329	ADS Control & Power Dist Unit 2	3	11/28/77
E-180 Sh. 7	D-107329	SRV Flow Monitoring System Unit 1	5	6/26/81
E-180 Sh. 8	D-107329	SRV Flow Monitoring System Unit 2	2	1/28/81
E-181 Sh. 1	D-107330	Nuclear Boiler Head Vent Vlvs. Unit 1	11	8/26/81
E-181 Sh. 3	D-107330	Feedwater Inlet Check Vlvs. Unit 1	7	8/19/81
E-181 Sh. 5	D-107330	Steam Line Equalizer & Drain Vlvs. Unit 1	4	7/31/81
E-181 Sh. 8	D-107330	Nuclear Boiler Head Vent Vlvs. Unit 2	5	6/21/80
E-181 Sh. 10	D-107330	Feedwater Inlet Check Valves Unit 2	3	8/6/80
E-181 Sh. 12	D-107330	Steam Line Equalizer & Drain Vlv Unit 2	6	8/28/81
E-184 Sh. 1	D-107333	LOCA Isolation Signals Unit 1	7	5/30/78
E-184 Sh. 2	D-107333	Diesel Gen Auto Start Signals Common	8	7/27/81
E-184 Sh. 3	D-107333	LOCA Isolation Signals Unit 2	5	11/1/78
E-185 Sh. 1	D-107334	Bypass Indication System (NSSS) Unit 1	6	8/5/81
E-185 Sh. 2	D-107334	Bypass Indication System (NSSS) Unit 1	6	8/17/81
E-185 Sh. 3	D-107334	Bypass Indication System (NSSS) Unit 1	4	7/27/81
E-185 Sh. 4	D-107334	Bypass Indication System (NSSS) Unit 1	4	3/1/79
E-185 Sh. 5	D-107334	Bypass Indication System (BOP) Unit 1	6	7/30/81
E-185 Sh. 6	D-107334	Bypass Indication System (BOP) Unit 1	5	5/8/79
E-185 Sh. 7	D-107334	Bypass Indication System (BOP) Unit 1	3	8/10/81
E-185 Sh. 8	D-107334	Bypass Indication System (BOP) Unit 1	5	5/8/79
E-185 Sh. 9	D-107334	Bypass Indication System (BOP) Unit 1	3	7/30/81
E-185 Sh. 10	D-107334	Bypass Indication System (BOP) Unit 1	5	11/26/80
E-185 Sh. 11	D-107334	Bypass Indication System (BOP) Unit 1	11	7/27/81

completed 3-8-83

TABLE 1.7-1 (Continued)

Drawing No.	File No.	Title	Rev.	Date
E-185 Sh. 12	D-107334	Bypass Indication System (BOP) Unit 1	10	7/27/81
E-185 Sh. 13	D-107334	Bypass Indication System (BOP) Unit 1	5	7/30/81
E-185 Sh. 14	D-107334	Bypass Indication System (BOP) Unit 1	7	7/30/81
E-185 Sh. 15	D-107334	Bypass Indication System NSSS) Unit 2	4	11/1/77
E-185 Sh. 16	D-107334	Bypass Indication System (NSSS) Unit 2	3	11/1/77
E-185 Sh. 17	D-107334	Bypass Indication System (NSSS) Unit 2	1	11/1/77
E-185 Sh. 18	D-107334	Bypass Indication System (NSSS) Unit 2	3	11/1/77
E-185 Sh. 19	D-107334	Bypass Indication System (BOP) Unit 2	2	1/12/77
E-185 Sh. 20	D-107334	Bypass Indication System (BOP) Unit 2	5	7/28/80
E-185 Sh. 21	D-107334	Bypass Indication System (BOP) Unit 2	2	1/12/78
E-185 Sh. 22	D-107334	Bypass Indication System (BOP) Unit 2	5	7/28/80
E-185 Sh. 23	D-107334	Bypass Indication System (BOP) Unit 2	3	1/12/77
E-185 Sh. 24	D-107334	Bypass Indication System (BOP) Unit 2	4	1/12/77
E-185 Sh. 25	D-107334	Bypass Indication System (BOP) Unit 2	8	7/28/80
E-185 Sh. 26	D-107334	Bypass Indication System (BOP) Unit 2	7	7/28/80
E-185 Sh. 27	D-107334	Bypass Indication System (BOP) Unit 2	3	1/12/77
E-185 Sh. 28	D-107334	Bypass Indication System (BOP) Unit 2	6	7/28/80
E-185 Sh. 29	D-107334	Motor Overload Bypass System-Common	2	7/13/81
E-185 Sh. 30	D-107334	Motor Overload Bypass System-Common	1	6/6/78
E-185 Sh. 31	D-107334	Motor Overload Bypass System Unit 1	2	7/30/81
E-185 Sh. 32	D-107334	Motor Overload Bypass System Unit 1	2	6/6/78
E-185 Sh. 33	D-107334	ESW Loop A & B BIS Common	6	1/15/81
E-185 Sh. 34	D-107334	Chan C/Div I Isolation RHR Sys Unit 1	8	8/14/81
E-185 Sh. 35	D-107334	Chan D/Div II Isolation RHR Sys Unit 1	7	8/14/81
E-185 Sh. 36	D-107334	Chan C/Div I Isolation RHR Sys Unit 2	5	5/16/79

completed 3-4-83

Drawing No.	File No.	Title	Rev.	Date
E-185 Sh. 37	D-107334	Chan D/Div II Isolation RHR Sys Unit 2	25	5/16/79
E-185 Sh. 38	D-107334	Chan C/Div I Iso. Core Spray Sys Unit 1	24	5/16/79
E-185 Sh. 39	D-107334	Chan D/Div II Iso. Core Spray Sys Unit 1	24	1/22/80
E-185 Sh. 40	D-107334	Chan C/Div I Iso. Core Spray Sys Unit 2	23	4/14/78
E-185 Sh. 41	D-107334	Chan D/Div II Iso Core Spray Sys Unit 2	23	4/14/78
E-185 Sh. 42	D-107334	Chan C/Div I Iso. Core Spray Sys Unit 1	34	8/14/81
E-185 Sh. 43	D-107334	Chan D/Div II Iso Core Spray Sys Unit 1 & 2	02	5/16/78
E-185 Sh. 45	D-107334	Div I & Div II Iso. Contnt. Atmosphere Cont. Unit 2	01	5/16/78
E-185 Sh. 46	D-107334	Isolation CKTS RHR Unit 1	24	8/14/81
E-185 Sh. 47	D-107334	Chan C/Div I & Chan D/Div II Iso. RHR Sys Unit 1	1	7/27/81
E-187 Sh. 1	D-107336	Containment Hydrogen Recombiner CTL Unit 1	011	8/2/81
E-187 Sh. 2	D-107336	Containment Hydrogen Recombiner CTL Unit 2	03	10/10/77
E-189 Sh. 1	D-107338	MSIV Leakage Control System Inboard System Valve Unit 1	36	2/2/81
E-189 Sh. 2	D-107338	MSIV Leakage Control System Inboard System Air Blower Unit 1	23	11/3/80
E-189 Sh. 3	D-107338	MSIV Leakage Control System Outboard System Air Blower Unit 1	05	11/3/80
E-189 Sh. 4	D-107338	MSIV Leakage Control System Pipe Heaters Unit 1	23	8/8/80
E-189 Sh. 5	D-107338	MSIV Leakage Control System Instrumentation Unit 1	07	7/27/81
E-189 Sh. 6	D-107338	MSIV Leakage Control System Inboard System Valve Unit 2	05	9/19/77
E-189 Sh. 7	D-107338	MSIV Leakage Control System Inboard System Air Blower Unit 2	1	11/3/80
E-189 Sh. 8	D-107338	MSIV Leakage Control System Outboard System System Air Blower Unit 2	24	11/3/80
E-189 Sh. 9	D-107338	MSIV Leakage Control System Pipe Heaters	02	11/3/80

completed 3.8.33

Drawing No.	File No.	Title	Rev.	Date
		Unit 2		
E-189 Sh. 10	D-107338	MSIV Leakage Control System Instrumentation Unit 2	16	3/15/78
E-192 Sh. 7	D-107341	Reactor Building Vent System Zone III Recirc Fans Common	15	7/27/81
E-192 Sh. 8	D-107341	Reactor Building Vent System Emer Swgr Rm Unit Coolers Unit 1	10	10/4/80
E-192 Sh. 11	D-107341	Reactor Building Vent System Reactor System Dampers Common	15	7/28/81
E-192 Sh. 12	D-107341	Reactor Building Vent Sytem Zone I & III Iso Dampers Unit 1	14	1/31/80
E-192 Sh. 13	D-107341	Reactor Building Vent System Recirc Isolation Dampers Unit 1	12	4/27/81
E-192 Sh. 14	D-107341	Reactor Building Vent System Airlock Isolation Dampers Unit 1	15	3/15/79
E-192 Sh. 15	D-107341	Reactor Building Vent System Pri Containment Iso Damper Unit 1	13	6/27/79
E-192 Sh. 17	D-107341	Reactor Building Vent System Swgr Cool Dampers Unit 1	13	6/27/79
E-192 Sh. 19	D-107341	Reactor Building Vent System Drywell Purp and Purge Unit 1	17	7/31/81
E-192 Sh. 20	D-107341	Reactor Building Vent System BDID'S Unit 1	16	7/31/81
E-192 Sh. 27	D-107341	Reactor Building Vent System Recirc Isolation Dampers Unit 2	17	11/4/80
E-192 Sh. 31	D-107341	Reactor Building Vent System Emerg Swgr Rm Unit Coolers Unit 2	18	6/4/81
E-192 Sh. 32	D-107341	Reactor Bldg. Vent Sys SWGR Cool Dampers Unit 2	14	6/20/79
E-192 Sh. 34	D-107341	Reactor Building Vent System Zone II & III Isolation Dampers	13	6/27/79
E-192 Sh. 35	D-107341	Reactor Building Vent System Air Lock Isolation Dampers Unit 2	13	4/3/78
E-192 Sh. 36	D-107341	Reactor Building Vent System Pri Containment Isolation Damper Unit 2	12	6/27/79

Completed 3/8/83

TABLE 1.7-1 (Continued)

Drawing No.	File No.	Title	Rev.	Date
E-192 Sh. 39	D-107341	Reactor Building Vent System Drywell Purg & Purge Unit 2	15	6/27/79
E-192 Sh. 40	D-107341	Reactor Building Vent System BDIDS Unit 2	13	12/10/79
E-193 Sh. 1	D-107342	Diesel Generator Bldg Vent Sys Vent Supply Fans Common	9	7/31/81
E-193 Sh. 2	D-107342	Diesel Generator Bldg. Vent Sys. Motor Operated Dampers Common	18	7/21/80
E-197 Sh. 1	D-107346	Control Room Emerg Fresh Air System Air Supply Fans Common	11	7/29/81
E-197 Sh. 2	D-107346	Control Room Emerg Fresh Air System Air Unit Fans Common	11	3/19/79
E-197 Sh. 3	D-107346	Control Room Emerg. Fresh Air System RAD and Chlor Signals Common	15	8/3/81
E-197 Sh. 4	D-107346	Control Room Emerg Fresh Air System Iso Dampers Common	6	11/27/80
E-197 Sh. 5	D-107346	Control Room Emerg Fresh Air System Filter Units Common	10	3/27/81
E-197 Sh. 6	D-107346	Control Room Emerg Fresh Air System Unit 2 Temp Iso Dampers Common	8	7/28/81
E-197 Sh. 7	D-107346	Control Room Emerg Fresh Air System Rad and and Chlor Signals II Common	13	6/12/81
E-197 Sh. 8	D-107346	Control Room Emerg Fresh Air System Isolation Dampers Common	6	11/27/78
E-197 Sh. 9	D-107346	Control Room Emerg Fresh Air System Isolation Dampers Common	11	7/2/81
E-197 Sh. 10	D-107346	Control Room Emerg Fresh Air System Air Supply Dampers Common	5	7/28/81
E-197 Sh. 11	D-107346	Control Room Emerg Fresh Air System A/C Unit Dampers Common	3	8/20/81
E-198 Sh. 1	D-107347	Battery Room Vent System Exhaust Fans Common	9	1/22/80
E-198 Sh. 2	D-107347	Battery Room Vent System Exhaust Dampers Common	5	4/7/78

completed 3-8-83

This drawing and the design it covers are the property of BECHTEL. They are merely loaned and on the borrower's express agreement that they will not be reproduced, copied, loaned, exhibited, nor used except in the limited way and private use permitted by any written consent given by the lender to the borrower.

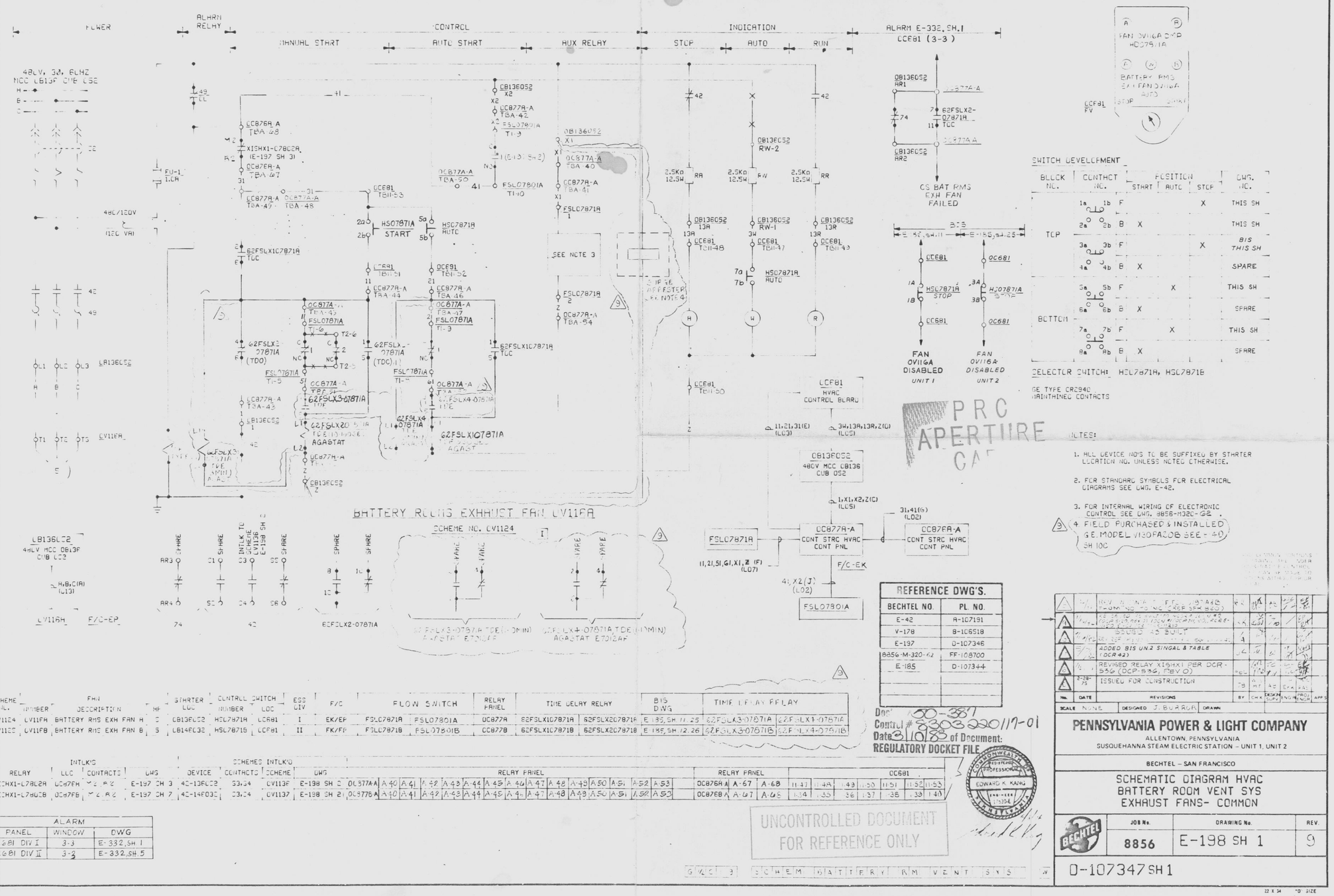

SCHEME NO.	FAN NUMBER	FAN DESCRIPTION	HP	STARTER LOC	CONTROL SWITCH NUMBER	CONTROL SWITCH LOC	ESS DIV	F/C	FLOW SWITCH		RELAY PANEL	TIME DELAY RELAY		BIS D.W.G.	TIME DELAY RELAY	
LV1124	LV11FA	BATTERY RMS EXH FAN A	5	CB13EC02	HSL7871H	CC681	I	EK/EP	FSLC7871A	FSL07801A	CC877A	62FSLX1C7871A	62FSLX2C7871A	E-185, SH 11, 25	62FSLX3-07871A	62FSLX1-07871A
LV1125	LV11FB	BATTERY RMS EXH FAN B	5	LB14EC02	HSL7871B	CC681	II	FK/FP	FSLC7871B	FSL07801B	CC877B	62FSLX1C7871B	62FSLX2C7871B	E-185, SH 12, 26	62FSLX4-07871B	62FSLX1-07871B

INTLK'G RELAY	INTLK'G LOC	INTLK'G CONTACTS	INTLK'G DWG	SCHEMES INTLK'D DEVICE	SCHEMES INTLK'D CONTACTS	SCHEME	DWG	RELAY PANEL																		RELAY PANEL		CC681						
XICHX1-L78L2B	CC67FH	2 B 2	E-197 SH 3	4C-13EC02	33,34	CV113F	E-198 SH 2	CC877A-A	A-40	A-41	A-42	A-43	A-44	A-45	A-46	A-47	A-48	A-49	A-50	A-51	A-52	A-53	CC876A-A	A-67	A-68	11-47	11-48	49	11-50	11-51	11-52	11-53
XICHX1-L78U3B	CC67FB	2 B 2	E-197 SH 7	4C-14F03C	33,34	CV113F	E-198 SH 2	CC877B-A	A-40	A-41	A-42	A-43	A-44	A-45	A-46	A-47	A-48	A-49	A-50	A-51	A-52	A-53	CC876B-A	A-67	A-68	11-34	11-35	36	11-37	11-38	11-39	11-40

ALARM PANEL	WINDOW	DWG
CC681 DIV I	3-3	E-332, SH 1
CC681 DIV II	3-3	E-332, SH 5

REFERENCE DWG'S.	
BECHTEL NO.	PL. NO.
E-42	A-107191
V-178	B-106518
E-197	D-107346
8856-M-320-62	FF-108700
E-185	D-107344

NO.	DATE	REVISIONS	BY	CHK	DESIGN SUPV	ENG	PROG ENGR	APP'S
4		ADDED BIS UNIT 2 SINGAL & TABLE (DCR 42)						
3		REVISED RELAY XICHX1 PER DCR-530 (DCP-530, FBV-0)						
2	2-28-75	ISSUED FOR CONSTRUCTION	TB	MT	AD	EKA	FAS	
1		ISSUED AS BUILT						

SCALE NONE | DESIGNED J. BURROR | DRAWN

PENNSYLVANIA POWER & LIGHT COMPANY
ALLENTOWN, PENNSYLVANIA
SUSQUEHANNA STEAM ELECTRIC STATION – UNIT 1, UNIT 2

BECHTEL – SAN FRANCISCO

SCHEMATIC DIAGRAM HVAC BATTERY ROOM VENT SYS EXHAUST FANS- COMMON

JOB No.	DRAWING No.	REV.
8856	E-198 SH 1	9

D-107347 SH 1

Doc Control # 8303220117-01
Date 3/10/83 of Document:
REGULATORY DOCKET FILE

PRC APERTURE CARD

UNCONTROLLED DOCUMENT FOR REFERENCE ONLY

EDWARD K. KANG REGISTERED PROFESSIONAL ENGINEER 15394

22 X 34 "D" SIZE

D

24X

I certify that the microfilmed image contained on this microform were made in the normal and regular course of business. This is a true, full, correct and complete reproduction and replacement for and/or in lieu of original documents generated by the Bechtel group of companies.
Signature R Akins Date 9-20-82 Camera Type MRG 1
Camera Operator

This drawing and the design it covers are the property of BECHTEL. They are merely loaned and on the borrower's express agreement that they will not be reproduced, copied, loaned, exhibited, nor used except in the limited way and private use permitted by any written consent given by the lender to the borrower.

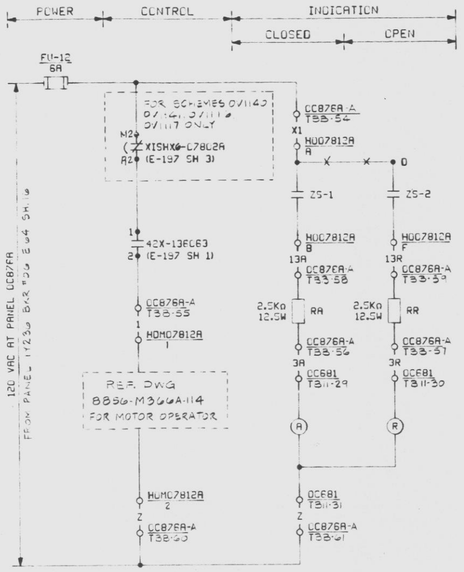

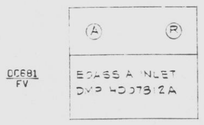

DAMPER LIMIT SWITCH DEVELOPMENT

SWITCH	CONTACT	100% OPEN	INTERMEDIATE	100% CLOSED	CONTACT USED
OPEN	ZS-1 A B C				THIS SH
					SPARE
CLOSED	ZS-2 D E F				SPARE
					THIS SH

CONTACT CLOSED

MOTOR OPERATED DAMPER: SEE TABLE A

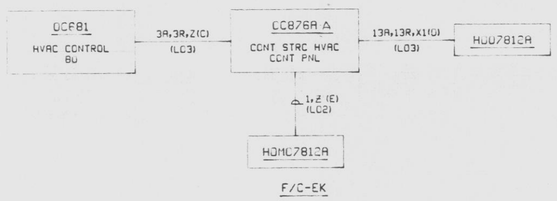

CONTROL STRUCTURE EMER FRESH AIR DAMPER HDD7812A

SCHEME NO. OV1140 I

(SEE TABLE A)

TABLE A

SCHEME NO.	DAMPER	DAMPER MOTOR	ESS DIV	F/C	FUSE NUMBER	FUSE LOC	INTLK'S RELAY	INTLK'S CONTACTS	INTLK'S DWG	TERMINAL NUMBERS RELAY PANEL	TERMINAL NUMBERS CONTACTS	TERMINAL NUMBERS DWG	CONTROL POWER PANEL	CONTROL POWER BKR
OV1140	HDD7812A	HDMC7812A	I	EK	FU-12	CC876A-A	42X-13EC63	1,2	E-197 SH 1	XISHX6-C78C2A	M2, R2	E-197 SH 3	CC876A-A B34 B35 B36 B37 B38 B39 B40 B41	CC876B-A 1-23 1-31 1-3	1Y236	06
OV1141	HDD7812B	HDMC7812B	II	FK	FU-12	CC876B-A	42X-14EC23	1,2	E-197 SH 1	XISHX6-C78C2B	M2, R2	E-197 SH 7	CC876B-A	1-16 1-17 1-8	1Y246	02
OV1146	HDD7814A	HDMC7814A	I	EK	FU-58	CC876A-A	42X-13EC63	11,12	E-197 SH 1	XISHX2-C78C2A	M3, R3	E-197 SH 3	CC876A-A B42 B43 B44 B45 B46 B47 B48 B49 B50	CC876B-A 1-32 1-33 1-34	1Y236	06
OV1147	HDD7814B	HDMC7814B	II	FK	FU-44	CC876B-A	42X-14EC23	11,12	E-197 SH 1	XISHX2-C78C2B	M3, R3	E-197 SH 7	CC876B-A	1-19 1-20 1-21	1Y246	02
OV1144	HDD7813A	HDMD7813A	I	EK	FU-21	CC876A-A	42X-13EC63	5,6	E-197 SH 1	—	—	—	CC876A-A C-9 C-10 C-11 C-12 C-13 C-14 C-15 C-16	CC876B-A 1-38 1-39 1-40	1Y236	06
OV1145	HDD7813B	HDMD7813B	II	FK	FU-21	CC876B-A	42X-14EC23	5,6	E-197 SH 1	—	—	—	CC876B-A	1-25 1-26 1-27	1Y246	02

TABLE B

SCHEME NO.	DAMPER	DAMPER MOTOR	ESS DIV	F/C	FUSE NUMBER	FUSE LOC	INTLK'S RELAY	INTLK'S CONTACTS	INTLK'S DWG	TERMINAL NOS RELAY PANEL		CONTROL POWER PANEL	CONTROL POWER BKR
OV1146	FDD7816A	FDMC7816A	I	EK	FU-22	CC876A-A	42X-13EC63	7,8	E-197 SH 1	CC876A-A	C-2 C-8	1Y236	06
OV1147	FDD7816B	FDMC7816B	II	FK	FU-22	CC876B-A	42X-14EC23	7,8	E-197 SH 1	CC876B-A	C-2 C-8	1Y246	02

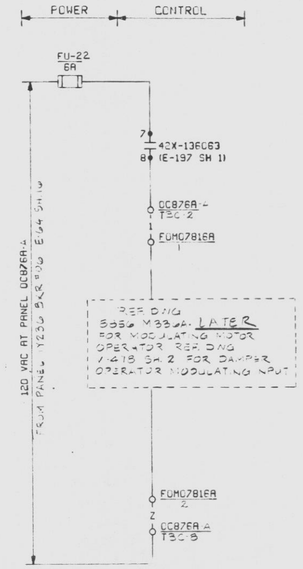

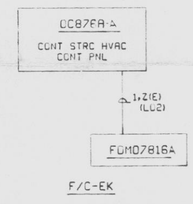

CONT STRC EMER OUTSIDE AIR SUPPLY MODULATING INLET VAN DAMPER FD07816A MOTOR

SCHEME NO. OV1146 I

(SEE TABLE B)

NOTES:

1. FOR STANDARD SYMBOLS FOR ELECTRICAL DIAGRAM SEE DWG E-142

REFERENCE DWG'S.	
BECHTEL NO.	PL. NO.
E-142	A-107191
V-178	B-106518
8856-M334A-114	FF-108860

PRC APERTURE CARD

THIS DOCUMENT IS UNDER PP&L ADMINISTRATIVE CONTROL. NO CHANGES CAN BE MADE WITHOUT PRIOR PP&L APPROVAL

	DATE	REVISIONS	BY	CHK	DESIGN SUPV	PROJ ENGR	APP'S
5	8/9/83	REVISED XISHX RELAYS PER DCR-830 (DCP-830 REV.0)	RMS	GJH	TC		
4	6/1/83	DELETE NITE #2 (DCR42)	RR	GJH	TC		
3	11/24/82	RELEASED FOR BID REVISED AS SHOWN	TW	JH	TC		
2	7/1/82	ISSUED "AS BUILT"	VA	FMM			
1	3/1/82	ISSUED FOR CONSTRUCTION		TB MT	TC		

SCALE NONE | DESIGNED J.BURROR | DRAWN

PENNSYLVANIA POWER & LIGHT COMPANY

ALLENTOWN, PENNSYLVANIA

SUSQUEHANNA STEAM ELECTRIC STATION – UNIT 1, UNIT 2

BECHTEL – SAN FRANCISCO

SCHEMATIC DIAGRAM HVAC
CONTROL ROOM EMER FRESH AIR SYS
AIR SUPPLY DAMPERS - COMMON

JOB No.	DRAWING No.	REV.
8856	E-197 SH 10	5

D-107346 SH 10

D

Docket # 50-387
Control # 8309220117-02
Date 3/10/83 of Document:
REGULATORY DOCKET FILE

UNCONTROLLED DOCUMENT FOR REFERENCE ONLY

GV-C22 SCHEM CR EMER FRESH AIR SY YY

22 X 34 "D" SIZE

24X

I certify that the microfilmed image contained on this microform were made in the normal and regular course of business. This is a true, full, correct and complete reproduction and replacement for and/or in lieu of original documents generated by the Bechtel group of companies.

Signed JACINTO Date 6-21-83 Camera Type XBU I
Camera Operator

This drawing and the design it covers are the property of BECHTEL. They are merely loaned and on the borrower's express agreement that they will not be reproduced, copied, loaned, exhibited, nor used except in the limited way and private use permitted by any written consent given by the lender to the borrower.

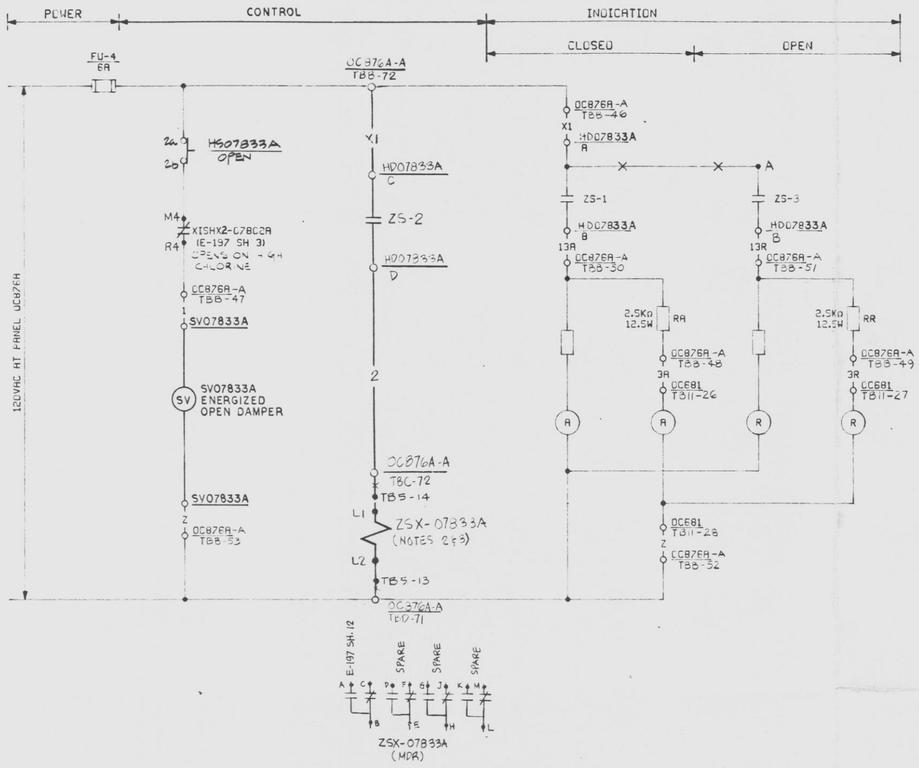

CONTROL STRUCTURE EMER OUTSIDE AIR CHLORINE ISOLATION DAMPER HD07833A

SCHEME NO. CV1113 [I]

SCHEME NO.	DAMPER	SOLENOID VALVE	CONTROL SWITCH NUMBER	CONTROL SWITCH LOC	EBS DIV	F/C	FUSE NO.	INTLK'S RELAY	INTLK'S CONTACT	INTLK'S DWG	ISOLATION RELAY
CV1113	HD07833A	SV07833A	HS07833A	OC876A	I	EK	FU-4	XISHX2-07802A	M4, R4	E-197, SH.3	ZSX-07833A
CV1115	HD07833B	SV07833B	HS07833B	OC876B	II	FK	FU-4	XISHX2-07802B	M4, R4	E-197, SH.7	ZSX-07833B

TERMINAL NUMBERS													
	CONTROL PANEL										OC681		
OC876A-A	B-46	B-47	B-48	B-49	B-50	B-51	B-52	B-53	5-13	5-14	11-26	11-27	11-28
OC876A-A	B-46	B-47	B-48	B-49	B-50	B-51	B-52	B-53	3A-1	3A-2	1-13	1-14	1-15

OC681 FV

A	R
CR RELIEF ISO DMP HD07833A	

CTLRM RELIEF AIR SYS ISOLATION DMP HD07833A

OC876A FV

CLOSE	OPEN

SWITCH DEVELOPMENT

BLOCK NO.	CONTACT NO.	POSITION	OPEN	CLOSE	DWG. NO.
TCP	1a 1b C 3a 2b	F		X	SPARE
		B	X		THIS SH

SELECTOR SWITCH: HS07833A, HS07833B

GE TYPE CR2940 MAINTAINED CONTACTS

DAMPER POSITION SWITCH DEVELOPEMENT

SWITCH	CONTACT NO.	100% OPEN	INTERMEDIATE	100% CLOSED	CONTACT USED
OPEN	ZS-1 A—B				THIS SH
OPEN	ZS-2 C—D				THIS SH
CLOSE	ZS-3 A—B				THIS SH
CLOSE	ZS-4 C—D				SPARE

— CONTACT CLOSE —

AIR OPERATED DAMPER 3 HD07833A & HD07833B

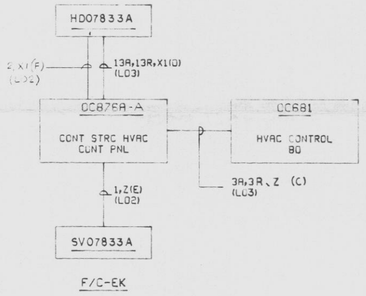

F/C-EK

NOTES:

1. FOR STANDARD SYMBOLS FOR ELECTRICAL DIAGRAMS SEE DWG. E-42.
2. FIELD TO PURCHASE PER E-40 SH. 5Q
3. INSTALL MDR ISOLATION RELAYS ON BARRIER SEPARATING SECTION A&B OF PANELS OC876A &B

THIS DOCUMENT IS UNDER PP&L ADMINISTRATIVE CONTROL. NO CHANGES CAN BE MADE WITHOUT PRIOR PP&L APPROVAL.

REFERENCE DWGS.	
BECHTEL NO.	PL NO.
E-42	A-107191
V-178	B-106518

Docket #50-387
Control #8303220117-03
Date 3/10/83 of Document:
REGULATORY DOCKET FILE

UNCONTROLLED DOCUMENT FOR REFERENCE ONLY

NO.	DATE	REVISIONS	BY	CHK	DESIGN SUPV	ENG MGR	PROJ MGR	APP'D
8	7/1/11	REVISED PER SPR 2215	SG					
7	5/11/11	REVISED TO INCORP FCR E-4229	HAC	PVI				
6	11/17/10	REVISED TO INCORP FCR E-3923	HAC					
5	11/6/08	REVISED TO INCORP FCR E-3744	HA					
4	1/28/	REVISED RELAY NUMBERS PER FCR E-3602A	BJ					
3	7/1/	ISSUED "AS BUILT"						
2	12/11/	REVISED RELAY NUMBERS PER FCR E-3602A INCORP SH 4	GT	RP				
1	1/	REVISED RELAY XISHX2 PER DCR-536 (DCP-536, REV 0)						
0	7/1/	ISSUED FOR CONSTRUCTION						

SCALE NONE | DESIGNED J. BURROR | DRAWN

PENNSYLVANIA POWER & LIGHT COMPANY

ALLENTOWN, PENNSYLVANIA

SUSQUEHANNA STEAM ELECTRIC STATION – UNIT 1, UNIT 2

BECHTEL – SAN FRANCISCO

SCHEMATIC DIAGRAM HVAC CONTROL RM EMER FRESH AIR SYS ISOLATION DAMPERS – COMMON

JOB No.	DRAWING No.	REV.
8856	E-197 SH 9	11

D-107346 SH 9

G V2 C 2 2 | SCHEMATIC EMER FRESH AIR SYS | W

22 x 34 "D" SIZE

PRC APERTURE CARD

24X

I certify that the microfilmed image contained on this microform were made in the normal and regular course of business. This is a true, full, correct and complete reproduction and replacement for and/or in lieu of original documents generated by the Bechtel group of companies.
Signed JACINTO Camera Operator Date 6-21-82 Camera Type MRO I

This drawing and the design it covers are the property of BECHTEL. They are merely loaned and on the borrower's express agreement that they will not be reproduced, copied, loaned, exhibited, nor used except in the limited way and private use permitted by any written consent given by the Tender to the borrower.

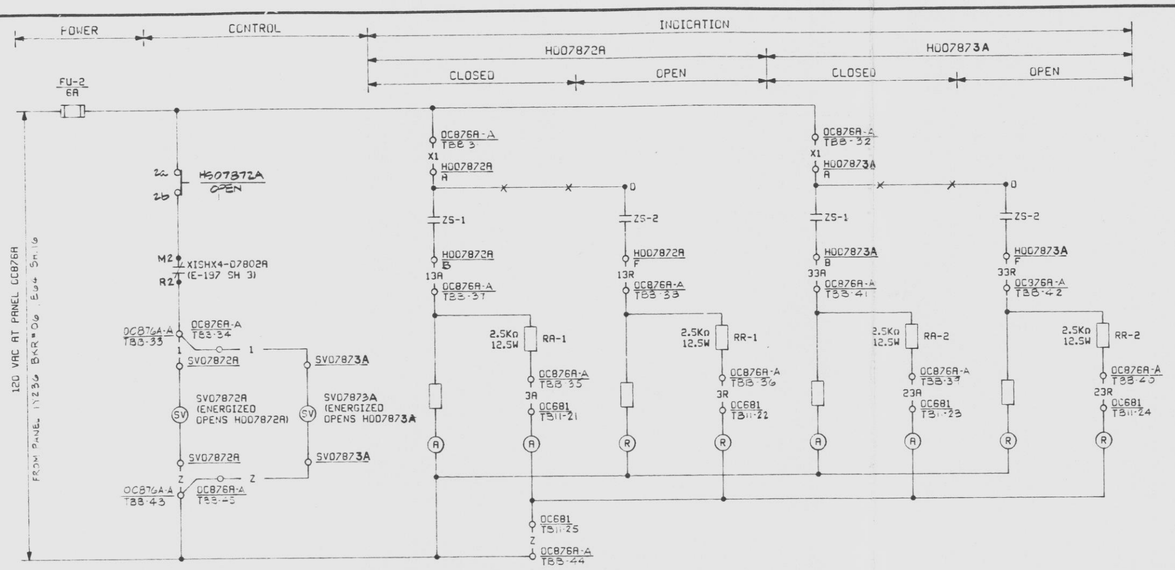

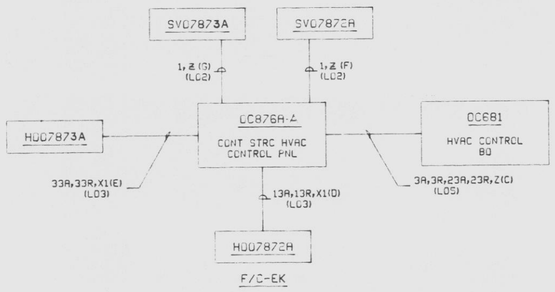

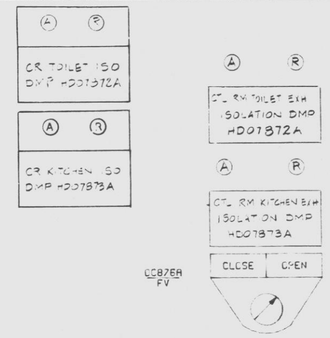

SWITCH DEVELOPMENT

BLOCK LOC	CONTACT NO.		POSITION			DWG. NO.
				OPEN	CLOSE	
TOP	1a 1b	F			X	SPARE
	2a 2b	B	X			THIS SH

SELECTOR SWITCH: HS07872A, HS07872B

GE TYPE CR 2940
MAINTAINED CONTACTS

DAMPER POSITION SWITCH DEVELOPMENT

SWITCH	CONTACT NO.		100% OPEN	INTERMEDIATE	100% CLOSED	CONTACT USED
OPEN	ZS-1	B C				THIS SH
						SPARE
CLOSED	ZS-2	E F				SPARE
						THIS SH

CONTACT CLOSED

HIR OPERATED DAMPER: HD07872A, & B, HD07873A & B

PRC APERTURE CARD

NOTES:

1. FOR STANDARD SYMBOLS FOR ELECTRICAL DIAGRAM SEE DWG. E-42.

UNCONTROLLED DOCUMENT FOR REFERENCE ONLY

THIS DOCUMENT IS UNDER PP&L ADMINISTRATIVE CONTROL. NO CHANGES CAN BE MADE WITHOUT PRIOR PP&L APPROVAL

SCHEME NO	DAMPER		CONTROL SWITCH NUMBER	CONTROL SWITCH LOC	ESS DIV	F/C	FUSE NO	SOLENOID VALVES		INTLK RELAY	INTLK CONTACTS	INTLK DWG	TERMINAL NUMBER RELAY PANEL	TERMINAL NUMBER OC681	CONTROL POWER PNL	CONTROL POWER BKR
CV1192	HD07872A	HD07873A	HS07872A	CC876A-A	I	EK	FU-2	SV07872A	SV07873A	XISHX4-07802A	M2, R2	E-197 SH 3	CC876A-A B31 B32 B33 B34 B35 B36 B37 B38 B39 B40 B41 B42 B43 B44 B45	1-21 1-22 1-23 1-24 1-25	1Y23G	06
CV1193	HD07872B	HD07873B	HS07872B	CC876B-A	II	FK	FU-2	SV07872B	SV07873B	XISHX4-07802B	M2, R2	E-197 SH 7	CC876B-A B31 B32 B33 B34 B35 B36 B37 B38 B39 B40 B41 B42 B43 B44 B45	1-8 1-9 1-7 1-1 1-2	1Y24G	02

D

Docket # 50-387
Control # 8305220117 04
Date 5/10/83 of Document:
REGULATORY DOCKET FILE

REFERENCE DWG'S.	
BECHTEL NO.	PL. NO.
E-42	A-107191
V-178	B-106518

CONTROL STRUCTURE KITCHEN & TOILET AIR INTHKE ISOLATION DAMPER HD07872A

SCHEME NO. CV1192 [1]

NO.	DATE	REVISIONS	BY	CHK	RESP. CONV.	ENG.	PROJ. MGR.	APP'D
6	7/14/81	REVISED PER SFR 2421	VC	LL				
5	7/13/81	REVISED RELAY XISHX4 PER DCR-536 (DCP-536, REV 0)	RM					
4	11/17/80	RELEASED FOR ADDED P.C. SECT & TERMINAL NOS						
3	7/1/80	REVISED AS NOTED						
2	5/1/80	ISSUED AS BUILT	VA					
1	7/1/79	ISSUED FOR CONSTRUCTION		ITB				

SCALE NONE | DESIGNED J.BURROR | DRAWN

PENNSYLVANIA POWER & LIGHT COMPANY
ALLENTOWN, PENNSYLVANIA
SUSQUEHANNA STEAM ELECTRIC STATION – UNIT 1, UNIT 2

BECHTEL – SAN FRANCISCO

SCHEMATIC DIAGRAM HVAC CONTROL RM EMER FRESH AIR SYS ISOLATION DAMPERS - COMMON

JOB No.	DRAWING No.	REV.
8856	E-197 SH 8	6

D-107346 SH 8

22 X 34 "D" SIZE

G V2 C 2 2 SCHEM CR EMER FRESH AIR SY N

24X

I certify that the microfilmed image contained on this microform were made in the normal and regular course of business. This is a true, full, correct and complete reproduction and replacement for and/or in lieu of original documents generated by the Bechtel group of companies.
Signed JACINTO Camera Operator Date 6-21-83 Camera Type XRG I

This drawing and the design it covers are the property of BECHTEL. They are merely loaned and on the borrower's express agreement that they will not be reproduced, copied, loaned, exhibited, nor used except in the limited way and private use permitted by any written consent given by the lender to the borrower.

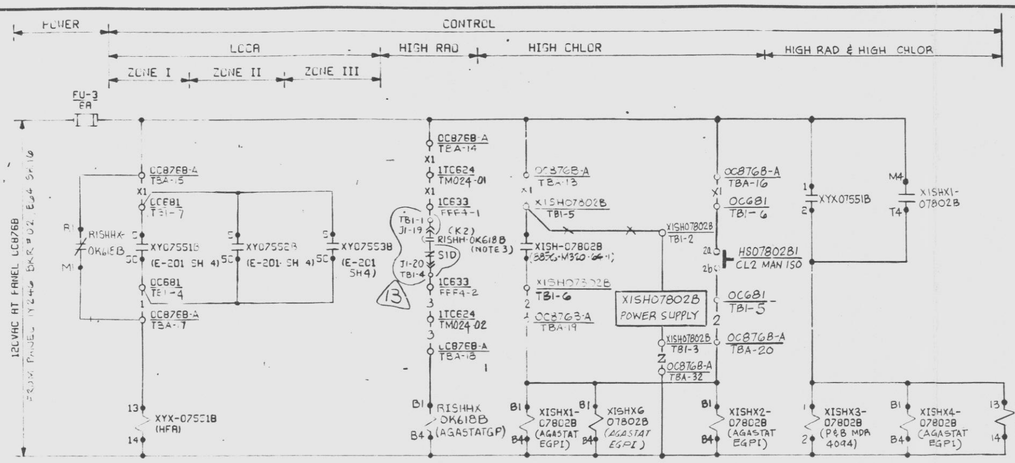

SELECTOR SWITCH

BLOCK NUMBER	CONTACT NUMBER	POSITION MAN	POSITION AUTO	DRAWING NUMBER
TOP	12 10 8 / 200 0 20		X	SPARE
		X		THIS SH

OC681 FV

SELECTOR SWITCH: HS0780281 GENERAL ELECTRIC TYPE CR2940 MAINTAINED CONTACTS

NOTES:

1. FOR STANDARD SYMBOLS FOR ELECTRICAL DIAGRAM SEE DWG. E-42.
2. ISOLATING RELAY CONTACTS, VENDOR WIRING, TERMINAL BLOCKS & EXTERNAL CABLES ASSOCIATED WITH THE RELAY SHALL BE SEPARATED FROM ALL OTHER CABLES & DEVICES IN THE PANEL.
3. CONTACT OPENS ON OUTSIDE AIR HIGH RADIATION. REF DWG 8856-U12-219.
4. CAUTION: DO NOT USE N.C. CONTACT OF THIS RELAY FOR CONTROL CIRCUIT INTERLOCK
5. FIELD TO FURNISH AND INSTALL RELAY, AGASTAT TYPE-EGP1, REF. E40-SH 8W

HIGH OUTSIDE RAD & CHLOR CONCENTRATION SIGNAL II

SCHEME OV1161 II

PRC APERTURE CARD

THIS DOCUMENT IS UNDER PP&L ADMINISTRATIVE CONTROL. NO CHANGES CAN BE MADE WITHOUT PP&L/BECHTEL APPROVAL

REFERENCE DWGS.	
BECHTEL NO.	PL NO.
E-42	A-107191
V-178	B-108518
E-203 SH 1	D-107352
E-198 SH 1,3	D-107347
E-332	D-107481
E-201	D-107350
8856-M1-012	FF-123510
8856-M320 SH 1	FP-108700

Docket # 50-387
Control # 830322011705
Date 3/10/83 of Document:
REGULATORY DOCKET FILE

UNCONTROLLED DOCUMENT
FOR REFERENCE ONLY

NO.	DATE	REVISIONS	BY	CHK	DESIGN SUPV	ENG	PROJ ENGR	APP'D
5	1/27/83	ISSUED FOR CONSTRUCTION (INCLUDES ADDITIONAL CHANGES AS NOTED IN REVISION NO. 4)						
4	11/17/82	REISSUED "AS BUILT" INCORP'D IDCN #2 (DCP 716 R0)	A	CIN				
3	6/2/82	ISSUED "AS BUILT"						
2	10/21/81	SFI (IV) (VI) INCLUDE IN REV 3 (VI A 12%) REVISED PER FCR E-1467						
1	7/1/81	REVISED RELS XISHX1, 2 & 4 ADDED REL XISHX6 & NOTES PER DCR 715 (DCP 580 R1) ADDED NOTE 4 PER DCR 546 (DCP 546 REV 0)						
0	1/1/81	ISSUED FOR CONSTRUCTION REVISED FROM SH 2						

SCALE NONE | DESIGNED J. BURRON | DRAWN

PENNSYLVANIA POWER & LIGHT COMPANY
ALLENTOWN, PENNSYLVANIA
SUSQUEHANNA STEAM ELECTRIC STATION – UNIT 1, UNIT 2

BECHTEL – SAN FRANCISCO

SCHEMATIC DIAGRAM HVAC
CONTROL RM EMER FRESH AIR SYS
RAD AND CHLOR SIGNALS II - COMMON

JOB No.	DRAWING No.	REV.
8856	E-197 SH 7	13

D-107346 SH 7

G 1/2 C 2 2 | SCHEM CR EMER FRESH AIR SY | W

22 X 34 "D" SIZE

24X

I certify that the microfilmed image contained on this microform were made in the normal and regular course of business. This is a true, full, correct and complete reproduction and replacement for and/or in lieu of original documents generated by the Bechtel group of companies.
Signed MINOUS Date 8-9-82 Camera Type MAG-1
Camera Operator

This drawing and the design it covers are the property of BECHTEL. They are merely loaned and on the borrower's express agreement that they will not be reproduced, copied, loaned, exhibited, nor used except in the limited way and private use permitted by any written consent given by the lender to the borrower.

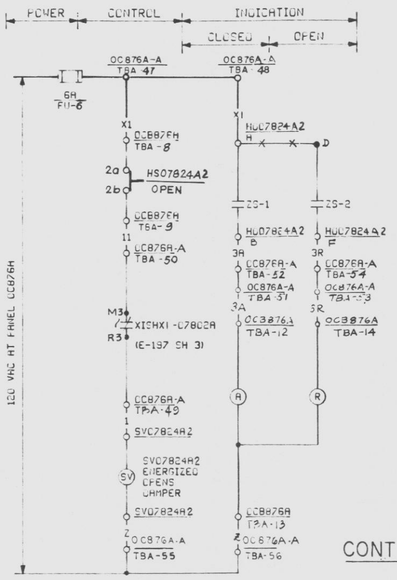

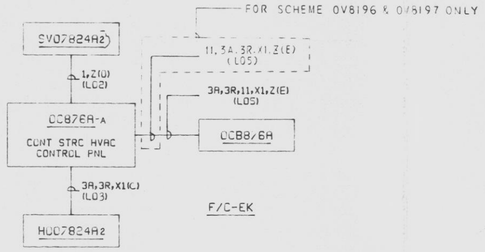

CONT STRUCTURE UNIT 2 ISOLATION DAMPER HDO7824A2

SCHEME NO. OV8186 I

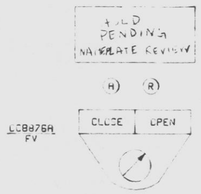

SWITCH DEVELOPMENT

BLOCK LOC	CONTACT NO.	POSITION OPEN	POSITION CLOSE	DWG. NO.
TOP	1a 1b / 2a 2b	F	Y	SPARE
		B	X	THIS SH

SELECTOR SWITCH: HS07824A2, A4, B2 & B4
GE TYPE CR 2940
MAINTAINED CONTACTS

DAMPER POSITION SWITCH DEVELOPMENT

SWITCH		CONTACT NO.	100% OPEN	INTERMEDIATE	100% CLOSED	CONTACT USED
OPEN	2S-1	A B C				THIS SH
						SPARE
CLOSED	2S-2	D E F				SPARE
						THIS SH

CONTACT CLOSED

AIR OPERATED DAMPER: HDO7824A2, A4, B2 & B4

NOTES:

1. FOR STANDARD SYMBOLS FOR ELECTRICAL DIAGRAM SEE DWG. E-42.

SCHEME NO.	DAMPER	CONTROL SWITCH NUMBER	CONTROL SWITCH LOC	CONTROL PNL	EDG DIV	F/C	FUSE NO.	SOLENOID VALVE	INTLKS RELAY	INTLKS CONTACTS	INTLKS DRAWING	TERMINAL NOS.
OV8186	HDO7824A2	HSO7824A2	OC887GA	OC87FA-A	I	EK	FU-6	SVO7824A2	XICHX1-C7802H	M3, R3	E-197 SH 3	A-47 A-48 A-49 A-50 A-51 A-52 A-53 A-54 A-55 A-56
OV8187	HDO7824B2	HSO7824B2	OC887FB	OC87FB-A	II	FK	FU-6	SVO7824B2	XICHX1-C7802B	M3, R3	E-197 SH 7	
OV8190	HDO7824A4	HDO7824A4	OC887FA	OC87FA-A	I	EK	FU-8	SVO7824A4	XICHX2-C7802H	M1, R1	E-197 SH 3	B-1 B-2 B-3 B-4 B-5 B-6 B-7 B-8 B-9 B-10
OV8191	HDO7824B4	HDO7824B4	OC887FB	OC87FB-A	II	FK	FU-8	SVO7824B4	XICHX2-C7802B	M1, R1	E-197 SH 7	
OV8196	HDO7824A1	HSO7824A1	OC8876A	OC876A-A	I	EK	FU-5	SVO7824A1	XISH4-07802A	M4, R4	E-197 SH 3	A37 A38 A39 A40 A41 A42 A43 A44 A45 A46
OV8197	HDO7824B1	HSO7824B1	OC8876B	OC876B-A	II	FK	FU-5	SVO7824B1	XISH4-07802B	M4, R4	E-197 SH.7	

Docket # 50-387
Control # 8303220117-06
Date 3/18/83 of Document:
REGULATORY DOCKET FILE

REFERENCE DWG'S.	
BECHTEL NO.	PL. NO.
E-42	A-107191
V-178	B-106518

UNCONTROLLED DOCUMENT FOR REFERENCE ONLY

PRC APERTURE CARD

THIS DOCUMENT IS UNDER PP&L ADMINISTRATIVE CONTROL. NO CHANGES CAN BE MADE WITHOUT PRIOR PP&L APPROVAL

NO.	DATE	REVISIONS	BY	CHK	DESIGN SUPV	ENG	PROJ MGR	APP'S
6	5/9/83	REVISED TO INCORP IDCN #1 (DCP 366.1 REV 0)	NP		AB			
5	3/31/83	REVISED PER SPR 2214	SG					
4	11/1/82	REL. SCHEMES OV8184, 85, 88, 89, 92, 93, 94 & 95 ADD TERM NOS PER DCP 612.1	TPS					
3	7/27/82	REVISED AS SHOWN	JW					
2	5/21/82	ISSUED AS BUILT	VA					
1	4/1/82	REVISED XICHX RELAYS PER DCR-599 (DCP-530 REV 0)						
0	4/1/75	ISSUED FOR CONSTRUCTION	JB		AB			

SCALE NONE | DESIGNED J.BURRUS | DRAWN

PENNSYLVANIA POWER & LIGHT COMPANY
ALLENTOWN, PENNSYLVANIA
SUSQUEHANNA STEAM ELECTRIC STATION – UNIT 1, UNIT 2

BECHTEL – SAN FRANCISCO

SCHEMATIC DIAGRAM HVAC
CONTROL RM EMER FRESH AIR SYS
UNIT 2 ISO DAMPERS - COMMON

JOB No.	DRAWING No.	REV.
8856	E-197 SH 6	8

D-107346 SH 6

D

G½C22 SCHEM CR EMER FRESH AIR SY W

22 X 34 "D" SIZE

24X

I certify that the microfilmed image contained on this microform were made in the normal and regular course of business. This is a true, full, correct and complete reproduction and replacement for and/or in lieu of original documents generated by the Bechtel group of companies.
Signed JACINTO Camera Operator Date 6-21-82 Camera Type MRO 1

This drawing and the design it covers are the property of BECHTEL. They are merely loaned and on the borrower's express agreement that they will not be reproduced, copied, loaned, released nor used except in the limited way and private use permitted by any written consent given by the lender to the borrower.

POWER | CONTROL | PRE-IGNITION TEMP. TEST & RESET | IGNITION TEMP. & RESET | SOLENOID VALVE | HTR START | HEATER TROUBLE | ALARM E-332 SH 1 CC681 (1-4)

480V, 3Ø, 6CHZ
MCC 08136 CUB 043

CLOSES AT HIGH FILTER TEMP 190°F (PRE-IGNITION) (TYP FOR 7)

CLOSES AT HIGH HIGH TEMP 450°F IGNITION) (TYP FOR 7)

TSHH07812A1 THRU TSHH07812A7

TSHH07813A1 THRU TSHH07813A7

TEST PB-1

RESET PB-2

CR-1 CR-2 CR-3 CR-4 CR-5 CR-6

SV07813A (NOTE 3)

SV07813B

CONT (42)

CONTACTS OPEN AT HTR TEMP 130°F

TSH07514A1

TSH07514A2

CONTACTS OPEN AT HTR TEMP 200°F

TSHH07514H1

TSHH07514H2

EMERG OA CHARC HI/HI-HI TEMP

HVAC DIV I HI PRIORITY ALARM

ALARM E-331 SH 10 CC653 (13-5)

CR-7

SPARE

INTLK TO SCHEME DV1100 E-197 SH 1

INTLK TO SCHEME DV1101 E-197 SH 1

OE143A

SKW SKA

OE132A3
480V MCC 0836
CUB 043

A,B,C (A23)

OC889A
FILTER CONTROL PNL

F/C-EP

SVD7813A 1-Z (E) (LC02) → OC884A FILTER CONTROL PNL 2,3,X1 Z(G) (LC05) → OC876B-A CONT STRC HVAC CONT PNL

1,Z,(F) (FIELD TO (LC02) ROUTE VIA FLEX)

OC884A

F/C-EK

CONTROL RM FRESH AIR FILTER OF12SA & HEATER OE143A

SCHEME NO. DV1164 1

REFERENCE DWG'S.	
BECHTEL NO.	PL NO.
E-42	A-107191
V-178	8-106518
M-325-55-2	FF-108750
E-40	A-107188
E-48	A-107187

Doc. # 50-387
Control # 8203220117-05
Date 3/10/83 of Document:
REGULATORY DOCKET FILE

SCHEME NO	FILTER	HEATER NUMBER	HEATER KW	CKT BKR LOC	ESS DIV	F/C	TEMPERATURE SWITCH		SOLENOID VALVES	SCHEMES INTLKD SCHEME	SCHEMES INTLKD DWG	INTLK'S SCHEME	INTLK'S DWG	INTLK'S RELAY	INTLK'S LOC	INTLK'S CONTACTS	INTLK'S DWG	TMR DELAY RELAY
DV1164	OF12SA	OE143A	30	08136043	I	EP,EK	TSHH07812A1 THRU TSHH07812A7	TSHH07813A1 THRU TSHH07813A7	SV07813A	DV1100	E-197 SH 1	03/450	E-197 SH 1	42X-136063	OC876A-A TBA-33	9-10	E-197 SH 1	G2-OF13A
DV1165	OF12SB	OE143B	30	08146053	II	FP,FK	TSHH07812B1 THRU TSHH07812B7	TSHH07813B1 THRU TSHH07813B7	SV07813B	DV1101	E-197 SH 1	03/451	E-197 SH 1	42X-146023	OC876B-A	9-10	E-197 SH 1	G2-OF23A

ALARM PNL	ALARM WINDOW	ALARM DWG	ANN PNL	ANN WINDOW	ANN DWG	FILTER CONTROL PNL	COMPONENT BOX	TEMP SWITCHES
OC681	1-4	E-332 SH 1	OC653	13-5	E-331 SH 10	OC889A	OC884A	TSH 07514A1 TSH 07514A2 TSHH 07514A1 TSHH 07514A2
OC681	1-4	E-332 SH 5	OC653	13-6	E-331 SH 10	OC889B	OC884B	TSH 07514B1 TSH 07514B2 TSHH 07514B1 TSHH 07514B2

NOTES:

1. FOR STANDARD SYSMBOLS FOR ELECTRICAL DIAGRAMS SEE DWG. E-42.
2. REF 8856-M325-55 FOR VENDOR DWG. OF FILTER CONTROL PANEL.
3. WHEN SOLENOID VALVE IS ENERGIZED, VALVE TVD7813A OPENS. REF LOGIC DIAGRAM V-178 SH 17.
4. FIELD TO FURNISH PER E40 SH TW

THIS DOCUMENT IS NOW BEING MICROFILMED FOR NUCLEAR REGULATORY COMMISSION. NO QUESTIONS WILL BE MADE WITH RESPECT TO ITS ACCURACY OR LEGIBILITY UPON ITS RECEIPT AND MICROFILMING.

PRC APERTURE CARD

UNCONTROLLED DOCUMENT FOR REFERENCE ONLY

NO.	DATE	REVISIONS	BY	CHK	ENGR	PROJ ENGR	APPD
A	3/9/83	REVISED PER F/C-1329	HAC				
A	3/9/83	REVISED TERMINAL NOS TO AGREE WITH CONNECTION LIST (DWG E-42)	HAC				
A	3/9/83	ADDED TB2 & TB3 TO OC884A (PER E-42)	HAC				
B	3/11/83	REVISED TO INCORP PCR E-4107	HAC				
A	3/9/83	ISSUED FOR CONSTRUCTION	JB	MSS MT	RB	CR EXX	MJL

SCALE NONE | DESIGNED J.BURROR | DRAWN

PENNSYLVANIA POWER & LIGHT COMPANY
ALLENTOWN, PENNSYLVANIA
SUSQUEHANNA STEAM ELECTRIC STATION – UNIT 1, UNIT 2

BECHTEL – SAN FRANCISCO

SCHEMATIC DIAGRAM HVAC CONTROL RM EMER FRESH AIR SYS FILTER UNITS COMMON

JOB No.	DRAWING No.	REV.
8856	E-197 SH 5	10

D-107346 SH 5

12 X 34 "D" SIZE

24X

I certify that the microfilmed image contained on this microform were made in the normal and regular course of business. This is a true, full, correct and complete reproduction and replacement for and/or in lieu of original documents generated by the Bechtel group of companies.
Signature NINOUS Date 1-6- MRC 1
Camera Operator

This drawing and the design it covers are the property of BECHTEL. They are merely loaned and on the borrower's express agreement that they will not be reproduced, copied, loaned, exhibited, nor used except in the limited way and private use permitted by any written consent given by the lender to the borrower.

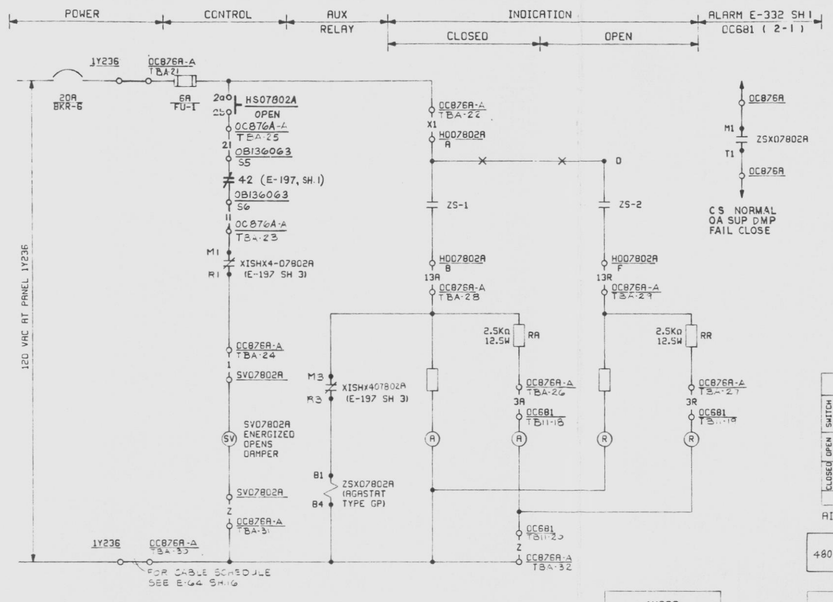

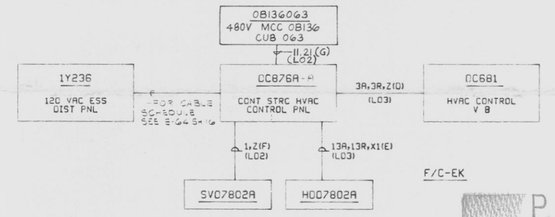

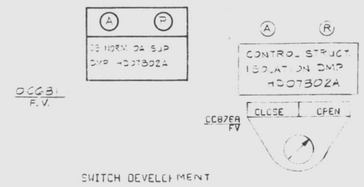

DAMPER POSITION SWITCH DEVELOPMENT

SWITCH	CONTACT NO.	100% OPEN	INTERMEDIATE	100% CLOSED	CONTACT USED
OPEN	ZS-1	a–b, c–d			THIS SH
					SPARE
CLOSED	ZS-2	a–b, c–d			SPARE
					THIS SH

CONTACT CLOSED

AIR OPERATED DAMPER: HD07802A HD07802A

UNCONTROLLED DOCUMENT FOR REFERENCE ONLY

PRC APERTURE CARD

THIS DOCUMENT IS UNDER PP&L ADMINISTRATIVE CONTROL. NO CHANGES CAN BE MADE WITHOUT PRIOR PP&L APPROVAL

NOTES:
1. FOR STANDARD SYMBOLS FOR ELECTRICAL DIAGRAMS SEE DWG. E-42.

CONTROL STRC FRESH AIR BYPASS ISOLATION DAMPER HD07802A

SCHEME NO. CV1170 I

REFERENCE DWGS.	
BECHTEL NO.	PL NO.
E-42	A-107191
V-178	B-106518

D

Docket # 50-387
Control # 8305250117-08
Date 3/10/83 of Document:
REGULATORY DOCKET FILE

SCHEME NO	DAMPER	CONTROL SWITCH NUMBER	CONTROL SWITCH LOC	POWER PANEL	POWER BKR	ES DIV	F/C	FUSE NO	SOLENOID VALVES	AUX. RELAY	INTLKS RELAY	INTLKS CONTACTS REF. DWGS.	TERMINAL NOS OC681	TERMINAL NOS CONTROL PANEL	STARTER AUX CONTACT LOC	ALARM PNL	ALARM WINDOW	ALARM DWG
CV1170	HDC7802A	HSC7802A	OC876-A-A	1Y236	6	I	EK	FU-1	SV07802A	ZSX07802A	XISHX4-07802A	M1,R1/M3,R3 E-197,SH.3	11-18 / 11-19 / 11-20	OC876A-A A21 A22 A23 A24 A25 A26 A27 A28 A29 A30 A31 A32	0B136063	OC681	2-1	E-332,SH.1
CV1171	HDC7802B	HSC7802B	OC876-B-A	1Y246	2	II	FK	FU-1	SV07802B	ZSX07802B	XISHX4-07802B	M1,R1/M3,R3 E-197,SH.7	1-1 / 1-2 / 1-3	OC876B-A A21 A22 A23 A24 A25 A26 A27 A28 A29 A30 A31 A32	0B146023	OC681	2-1	E-332,SH.5

G½C22 SCHEMCIA EMEA FRESH AIR SY N

3	7/27/82	ADDED SEE SH 4 TO OC876A AND REVISED SEE SH 2 AS SHOWN
2	7/9/82	REVISED AS SHOW PER LOGIC DIAGRAM V-178 SH 7 REV 2
1	5/14/82	ISSUED AS BUILT
0	1/15/82	REVISED RELAY XISHX4 PER DCR-946 (DCP 946, REV 0)
A	4/15/75	ISSUED FOR CONSTRUCTION

NO. DATE REVISIONS BY CHK DESIGN SUPV ENGR PROJ ENGR APP'D

SCALE NONE DESIGNED J. BURGR DRAWN

PENNSYLVANIA POWER & LIGHT COMPANY
ALLENTOWN, PENNSYLVANIA
SUSQUEHANNA STEAM ELECTRIC STATION – UNIT 1, UNIT 2

BECHTEL – SAN FRANCISCO

SCHEMACTIC DIAGRAM HVAC CONTROL RM EMER FRESH AIR SYS. ISOLATION DAMPERS - COMMON

JOB No.	DRAWING No.	REV.
8856	E-197 SH 4	6

O-107346 SH 4

22 X 34 "D" SIZE

24X

I certify that the microfilmed image contained on this microform were made in the normal and regular course of business. This is a true, full, correct and complete reproduction and replacement for and/or in lieu of original documents generated by the Bechtel group of companies.
Signed JACINTO Date 6-21-82 Camera Type MSG I
Camera Operator

This drawing and the design it covers are the property of BECHTEL. They are merely loaned and are the borrower's express agreement that they will not be reproduced, copied, loaned, exhibited, nor used except in the manner and for the purpose permitted by any written consent given by the owner of the drawing.

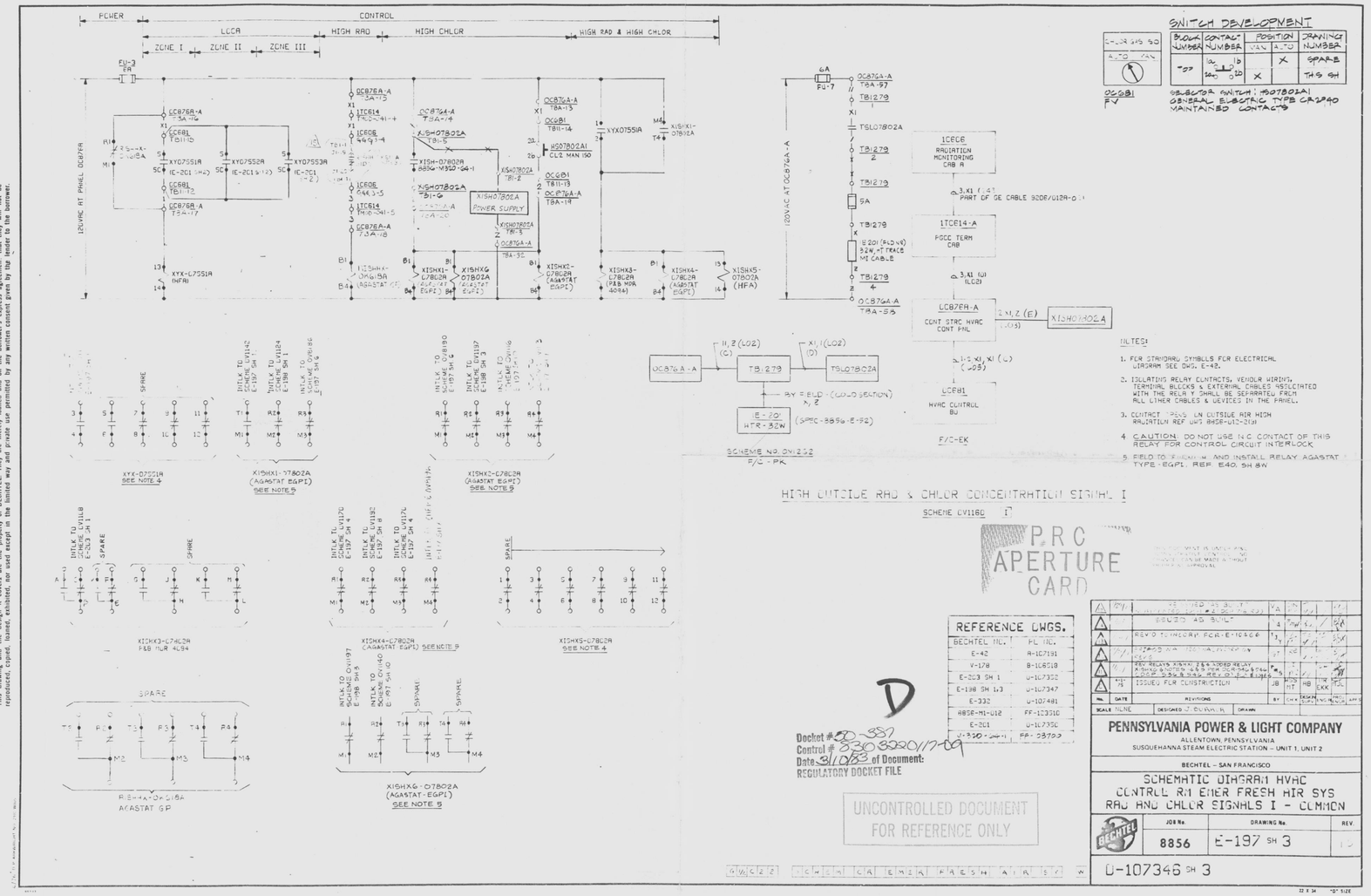

24X
I certify that the microfilmed image contained on this microform were made in the normal and regular course of business. This is a true, full, correct and complete reproduction and replacement for and/or in lieu of original documents generated for the Bechtel group of companies.
Signed NINOUS Camera Operator Date 8-9-83 Camera Type MKG-1

This drawing and the design it covers are the property of BECHTEL. They are merely loaned and on the borrower's express agreement that they will not be reproduced, copied, loaned, exhibited, nor used except in the limited way and private use permitted by any written consent given by the lender to the borrower.

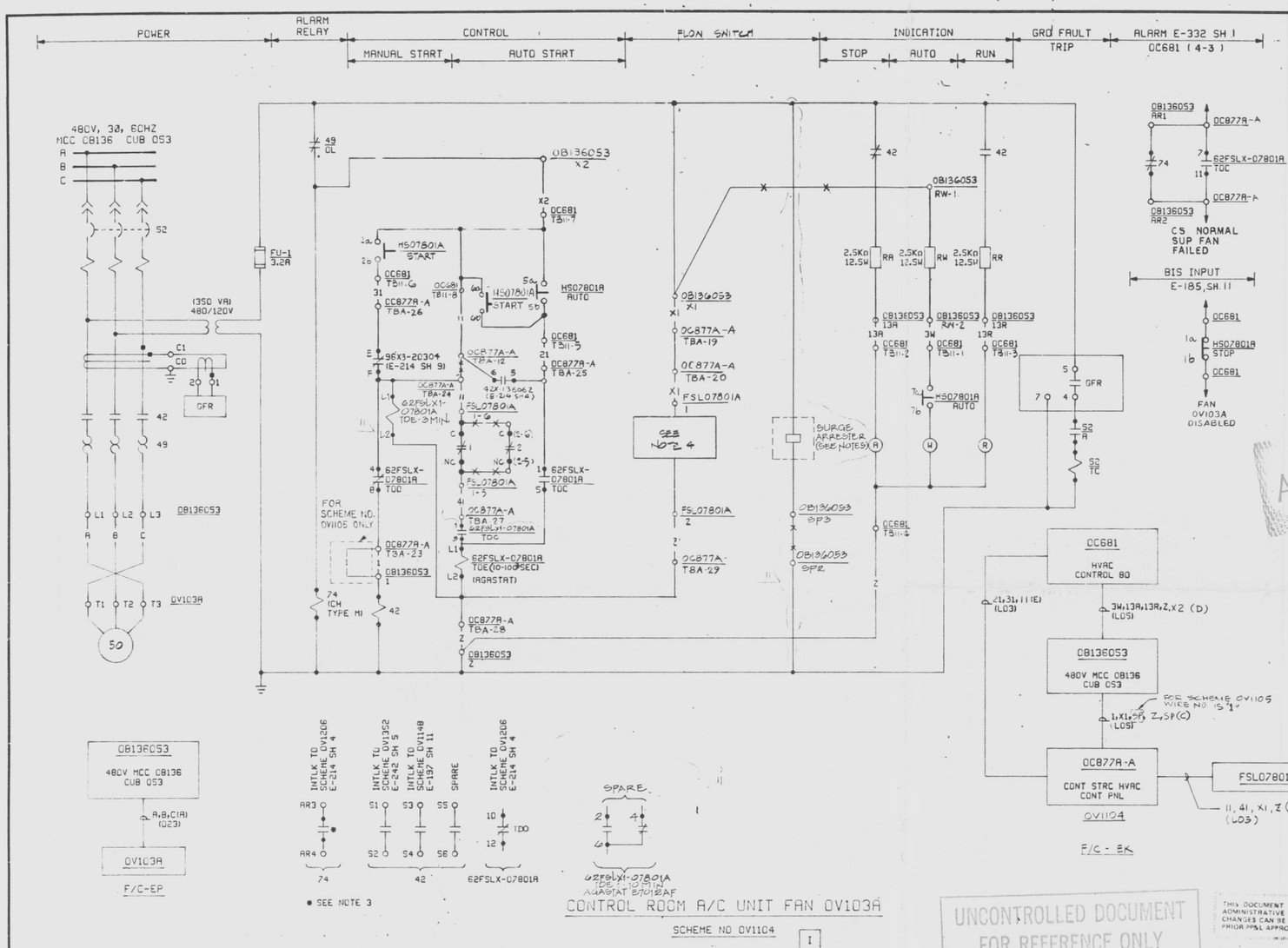

CONTROL ROOM A/C UNIT FAN OV103A

SCHEME NO OV1104 I

SWITCH DEVELOPMENT

BLOCK LOC	CONTACT NO.		POSITION START	POSITION AUTO	POSITION STOP	DWG NO.
TOP	1a 1b	F			X	THIS SH
	2a 2b	B	X			THIS SH
	3a 3b	F			X	E-214 SH 4
	4a 4b	B	X			SPARE
BOTTOM	5a 5b	F		X		THIS SH
	6a 6b	B	X			THIS SH
	7a 7b	F		X		THIS SH
	8a 8b	B	X			SPARE

SELECTOR SWITCH: HS07801A, HS07801B
GE TYPE CR2940
MAINTAINED CONTACTS

REFERENCE DWGS.	
BECHTEL NO.	PL NO.
E-42	A-107191
V-178	B-106518
E-214	D-107363
M-320-62	FF-108700
E-185	D-107344

NOTES:
1. ALL DEVICE NUMBERS TO BE SUFFIXED BY STARTER LOCATION NUMBER UNLESS OTHERWISE NOTED.
2. FOR STANDARD SYMBOLS FOR ELECTRICAL DIAGRAMS SEE DWG E-42.
3. FIELD TO CHANGE TO NORMALLY OPEN CONTACT.
4. FOR ELECTRONIC FLOW SWITCH CONTROL, SEE DWG V/P 8850-M320-02.
5. FIELD PURCHASED & INSTALLED SURGE ARRESTER G.E. MODEL #V130PA20B (SEE E-40 SH 100)

SCHEME NO.	FAN NUMBER	FAN DESCRIPTION	FAN HP	STARTER LOC	CONTROL SWITCH NUMBER	CONTROL SWITCH LOC	ESS DIV	F/C	FLOW SWITCH	RELAY PANEL	TIME DELAT RELAT		INTLK'S RELAY	INTLK'S CONTACTS	INTLK'S DWG	RELAY	CONTACTS	DWG	BIS DWG
OV1104	OV103A	CONT RM A/C UT FAN A	50	OB136053	HS07801A	OC681	I	EK/EP	FSL07801A	OC877A-A	62FSLX1-07801A	62FSLX-07801A	42X-136062	5,6	E-214 SH 4	96X3-20304	5, 7	E-214 SH 9	E-185, SH. 11
OV1105	OV103B	CONT RM A/C UT FAN B	50	OB146062	HS07801B	OC681	II	FK/FP	FSL07801B	OC877B-A	62FSLX1-07801B	62FSLX-07801B	42X-146043	5,6	E-214 SH 4	96X3-20404	5, 7	E-214 SH 9	E-185, SH. 12

SCHEMES INTLK'D RELAY	CONTACTS	RELAY	CONTACTS	SCHEME	DWG	SCHEMES INTLK'D WITH STARTER AUX CONTACTS STARTER LOC	CONTACTS	SCHEME	DWG	CONTACTS	SCHEME	DWG	TERMINAL NUMBER RELAY PANEL	OC681	ALARM PNL	WINDOW	DWG
74-136053	AR3, AR4	62FSLX-07801A	10, 12	OV1206	E-214 SH 4	OB136053	S1, S2	OV1352	E-242 SH 5	S3, S4	OV1148	E-197 SH 11	OC877A		OC681	4-3	E-332, SH. J
74-146062	AR3, AR4	62FSLX-07801B	10, 12	OV1207	E-214 SH 4	OB146062	S1, S2	OV1353	E-242 SH 5	S3, S4	OV1149	E-197 SH 11	OC877B		OC681	4-3	E-332, SH. S

GV2C22 SCHEMATIC DIAGRAM HVAC CONTROL STRUCTURE A/C UNIT FANS - COMMON

UNCONTROLLED DOCUMENT FOR REFERENCE ONLY

THIS DOCUMENT IS UNDER PP&L ADMINISTRATIVE CONTROL. NO CHANGES CAN BE MADE WITHOUT PRIOR PP&L APPROVAL

PRC APERTURE CARD

NO.	DATE	REVISIONS	BY	CHK	DESIGN SUP	ENG	PROJ ENGR	APP'D
5	3/1/82	REV. TO INCORP. FCR E-10816						
4	1/19/82	RE-ISSUED "AS BUILT" INCORP. DCN #3 (DCP 8120 REV.) DCN #4 (DCP 8120 REV.) PCR E-11150 (REV PER FCR E-11210)	BA R					
3	9/21/81	ISSUED "AS BUILT" (LOR 47)						
2	4-1-81	REVD TO INCORP FCR #E-10850						
1	4-1-75	ISSUED FOR CONSTRUCTION	JB			AB	LR EKK	MJL

SCALE NONE | DESIGNED J.BURROR | DRAWN

PENNSYLVANIA POWER & LIGHT COMPANY
ALLENTOWN, PENNSYLVANIA
SUSQUEHANNA STEAM ELECTRIC STATION – UNIT 1, UNIT 2

BECHTEL – SAN FRANCISCO

SCHEMATIC DIAGRAM HVAC CONTROL STRUCTURE
A/C UNIT FANS - COMMON

JOB No.	DRAWING No.	REV.
8856	E-197 SH 2	11

D-107346 SH 2

22 X 34 "D" SIZE

D

24X

I certify that the microfilmed image contained on this microform were made in the normal and regular course of business. This is a true, full, correct and complete reproduction and replacement fog and/or in lieu of original documents generated by the Bechtel group of companies.
Signed JACINTO Camera Operator Date 9-16-82 Camera Type MRO I

This drawing and the design it covers are the property of BECHTEL. They are merely loaned and on the borrower's express agreement that they will not be reproduced, copied, loaned, exhibited, nor used except in the limited way and private use permitted by any written consent given by the lender to the borrower.

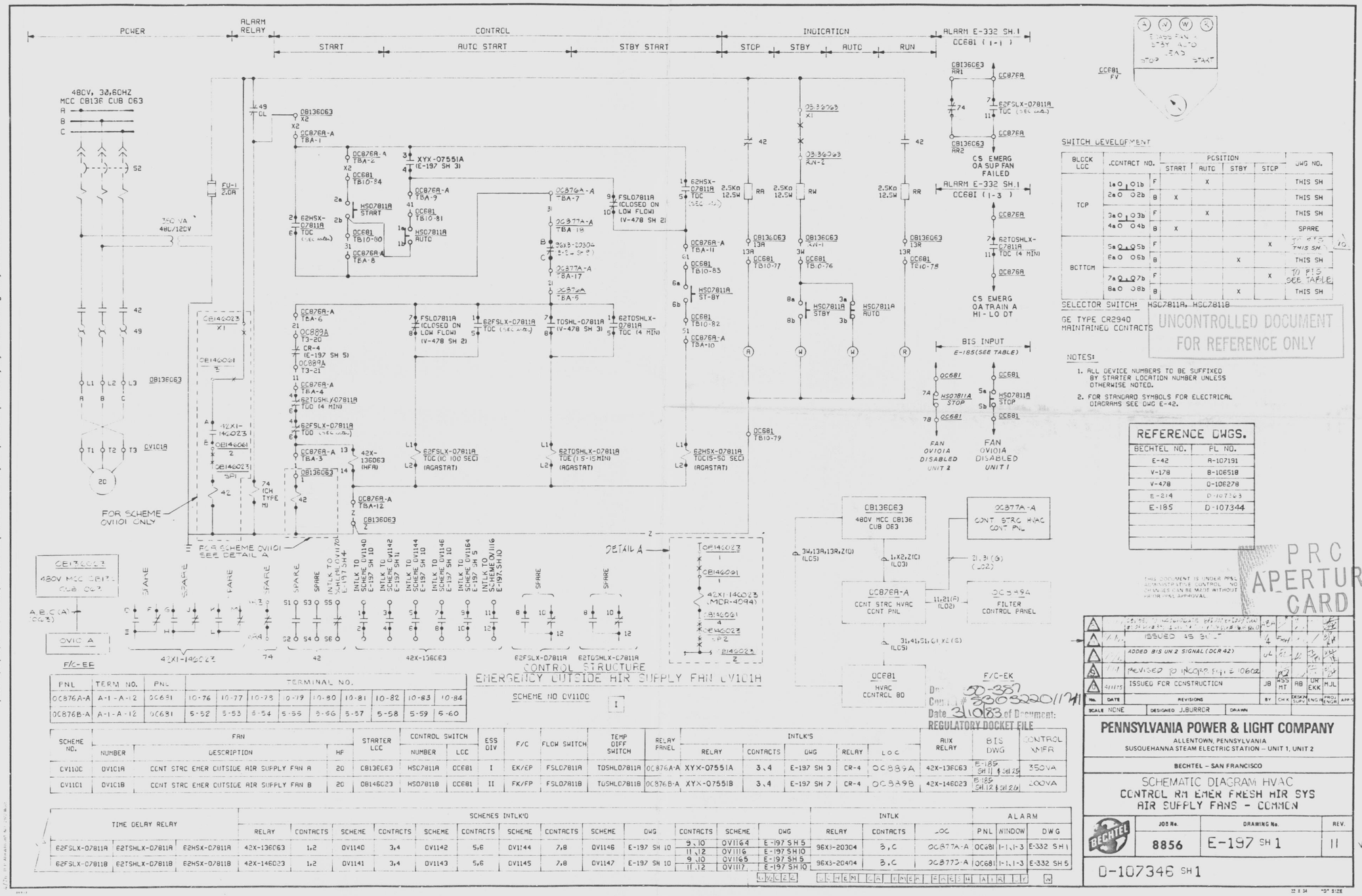

PNL	TERM NO.	PNL	TERMINAL NO.								
OC876A-A	A-1-A-12	OC681	10-76	10-77	10-78	10-79	10-80	10-81	10-82	10-83	10-84
OC876B-A	A-1-A-12	OC681	5-52	5-53	5-54	5-55	5-56	5-57	5-58	5-59	5-60

SCHEME NO.	FAN NUMBER	FAN DESCRIPTION	FAN HP	STARTER LOC	CONTROL SWITCH NUMBER	CONTROL SWITCH LOC	ESS DIV	F/C	FLOW SWITCH	TEMP DIFF SWITCH	RELAY PANEL	INTLK'S RELAY	INTLK'S CONTACTS	INTLK'S DWG	INTLK'S RELAY	INTLK'S LOC	AUX RELAY	BIS DWG	CONTROL MFR
CV110C	CV1C1A	CONT STRC EMER OUTSIDE AIR SUPPLY FAN A	20	CB13EC63	HSC7811A	OC681	I	EK/EP	FSLC7811A	TOSHLC7811A	OC876A-A	XYX-07551A	3,4	E-197 SH 3	CR-4	OC889A	42X-136C63	E-185 SH 11 & SH 25	350VA
CV11C1	CV1C1B	CONT STRC EMER OUTSIDE AIR SUPPLY FAN B	20	CB146C23	HSC7811B	OC681	II	FK/FP	FSLC7811B	TOSHLC7811B	OC876B-A	XYX-07551B	3,4	E-197 SH 7	CR-4	OC889B	42X-146C23	E-185 SH 12 & SH 26	200VA

TIME DELAY RELAY			SCHEMES INTLK'D RELAY	CONTACTS	SCHEME	CONTACTS	SCHEME	CONTACTS	SCHEME	CONTACTS	SCHEME	DWG	INTLK CONTACTS	INTLK SCHEME	INTLK DWG	ALARM RELAY	ALARM CONTACTS	ALARM LOC	ALARM PNL	ALARM WINDOW	ALARM DWG
62FSLX-07811A	62TSHLX-07811A	62HSX-07811A	42X-136063	1,2	OV1140	3,4	OV1142	5,6	OV1144	7,8	OV1146	E-197 SH 10	9,10	OV1164	E-197 SH 5	96X3-20304	B,C	OC877A-A	OC681	1-1,1-3	E-332 SH 1	
62FSLX-07811B	62TSHLX-07811B	62HSX-07811B	42X-146023	1,2	OV1141	3,4	OV1143	5,6	OV1145	7,8	OV1147	E-197 SH 10	11,12	OV1116	E-197 SH 10							
													9,10	OV1165	E-197 SH 5	96X3-20404	B,C	OC877A-A	OC681	1-1,1-3	E-332 SH 5	
													11,12	OV1117	E-197 SH 10							

I certify that the microfilmed image contained on this microfilm were made in the normal and regular course of business. This is a true, full, correct and complete reproduction and replacement for and/or in lieu of original documents generated by the Bechtel group of companies.
Signed JACINTO Camera Operator Date 6-21-82 Camera Type M80 I
24X

This drawing and the design it conveys are the property of BECHTEL. They are merely loaned and on the borrower's express agreement that they will not be reproduced, copied, loaned, exhibited nor used except as may be permitted by any written consent given by the lender to the borrower.

4.16KV, 3PHASE, 60HZ BUS (B) (1A202) CUB 05

POWER | RUN: CLOSING, TEST, MANUAL, AUTO | INDICATION: SPRING CHARGED, STOP | STOP: RUN, TEST, MANUAL | FEEDER OVERCURRENT (50/51) | BUS U/V (27A) | BUS L/O (86A) | FDR GRD O/C (50A9) | FLAG RESET | COMPUTER (E 301, SH 23, 72) UNIT 1 (EA250), UNIT 2 (EA250)

DEVICE

CSW LATERAL

125V DC BUS AT 4.16 KV SWITCHGEAR 1A202 FROM 1D824 SHT 4 & 31, E-69, SH 11

125V AC AT 1A20205 FROM 1L824A SHT 21 (E-268 SH 2)

ALARM (E-324, SH.18)

STATUS INDICATION (E-155 SH 9)

PUMP OUT OF SERVICE | CS PUMP B AUTO TRIP | MOTOR OVERLOAD

TOTAL HOURS METER

CONTROL SWITCH: 43W-1A20205
WESTINGHOUSE TYPE W2 PISTOL GRIP HANDLE
SPRING RETURN TO NORMAL
NOTE: LATERAL CONTACT ACTION IS INDEPENDENT OF ROTARY CONTACT ACTION AND MUST BREAK BEFORE MAKE IN BOTH DIRECTIONS.

AMMETER SWITCH: AS-1A20205
WESTINGHOUSE TYPE W2 W/ ROUND FIXED HANDLE
MAINTAINED CONTACTS
ARE INDEPENDENT CIRCUIT WITH OFF

* Normally closed contacts of W-2 switches with spring return to neutral are not to be used in a safety-related circuit which functions in a positive manner to mitigate a design basis event, refer to NRC IE Bulletin 80-20 and MLI-9711.

CONTROL SWITCH: HS-20205
G.E. TYPE CR2940(P.B) (NOTE 6)
MOMENTARY CONTACTS

CORE SPRAY PUMP 1P203
SCHEME No. 10802

CORE SPRAY PUMP B
STOP | AUTO | START
1C601 F.V.

NOTES:
1. FOR STANDARD SYMBOLS FOR ELECTRICAL DIAGRAM SEE DWG 8856-E-42
2. ALL DEVICE NOS TO BE SUFFIXED BY BREAKER LOCATION N2 UNLESS NOTED OTHERWISE.
3. CONTACT CLOSES ON CORE SPRAY SYSTEM INITIATION AND REMAINS CLOSED UNTIL RESET.
4. 2K Ω RESISTOR TO BE PURCHASED AND INSTALLED IN SWGR 1A20205 BY FIELD (REF E-40 SH. 7A)
5. DESIGN BASED ON G.E. APED MARKED ELEMENTARY # 7918419WJ (V/P 8856-MI-E21-35)
6. PURCHASED AND INSTALLED BY FIELD (E40 SH. 3K, 5x, 5Y & 5Z). DCP 451-1

UNCONTROLLED DOCUMENT FOR REFERENCE ONLY

No.	DATE	REVISIONS	BY	CHK	ENGR	ENGR	APPR
4	7/9/84	REV'D STOP CKT (DCR 596 (DCP-451-2 R1)) REPLACED 5A & 5Y (DCR 629 (DCP 529-2E 4th))	EAR	JW	TC	GB	BH
3	8/5/83	INSERT FROM # 5 (DCP-451-2, REV-03) ; FROM # 4 (DCP 608, 43, REV-01) REVISED NOTE #5 PER DCN #1 (DCR 008); ADD NOTE TO DWG (DCR 4-43)	EAR	JW	TC	GB	BH
2	4/4/83	REV'D 52 SECTION RATIO (AT 4 PLACES) REVISED 43 & 52AL (WERE 4A, 7A & 4B AS SHOWN) ADD NEW SW #7, ADDED COMPANY NO (DCR 43)	JK	JW	TC	GB	BH
1	1/19/83	Re-Issue to change DWG. No. from 133	JK	JW	TC	GB	BH
0	9/1/82	ISSUED "AS BUILT" REV'D 4.16 KV BUS 10 NO (DCR 6138 INC FOR #10690 DFT-13 REV 2 WAS INCORP IN REV 2 W.A. S-10).	TJY	JW	VA	GT	
A	7/7/81	ISSUED FOR CONSTRUCTION	JK	JW	TC	GB	BH

PENNSYLVANIA POWER & LIGHT COMPANY
ALLENTOWN, PENNSYLVANIA
SUSQUEHANNA STEAM ELECTRIC STATION – UNIT 1, UNIT 2
BECHTEL - SAN FRANCISCO

SCHEMATIC DIAGRAM
CORE SPRAY PUMP 1B
UNIT 1

JOB No.	DRAWING No.	REV.
8856	E-156 SH 2	14

D-107305 SH 2

REFERENCE DWG'S	
BECHTEL No.	PP&L No.
8-42	A-107191
8-29 SH 2	B-107172
8-109 SH 5	D-107292
8-3	B-107154
8856-MI-E21-35	FF-126510

THIS DOCUMENT IS UNDER PP&L ADMINISTRATIVE CONTROL. NO CHANGES CAN BE MADE WITHOUT PRIOR PP&L APPROVAL

EDWARD K. KANG PROFESSIONAL ENGINEER

F/C-BK | F/C-NM | F/C-BF | F/C-KP

24X
I certify that the microfilmed image contained on this microform were made in the normal and regular course of business. This is a true, full, correct and complete reproduction and replacement for and/or in lieu of original documents generated by the Docket group of companies.
Signed RHEY Date 6/7/82 Camera Type MRG-1 Camera Operator
PRC APERTURE CARD
Docket # 50-387
Control # 8303220117-12
Date 3/10/83 of Document:
REGULATORY DOCKET FILE
D

This drawing and the design it covers are the property of BECHTEL. They are merely loaned on the borrower's express agreement that they will not be reproduced, copied, loaned, exhibited, nor used except in the limited way and purpose permitted by any written consent given by the lender to the borrower.

4.16KV, 3PHASE, 60HZ BUS 1B (1A204) CUB 05

POWER | RUN: CLOSING DEVICE, TEST, MANUAL, AUTO | INDICATION: SPRING CHARGED, STOP, RUN | STOP: TEST, MANUAL AUTO | FEEDER OVERCURRENT (50/51) | BUS UV (27A) | BUS L/O (86A) | FDR GRD O/C (50A/G) | FLAG RESET | COMPUTER (F-301, SH. 23, 72) (EK763) UNIT 1 (EK203) UNIT 2

125V DC BUS AT 4.16 KV SWITCHGEAR 1A204 FROM ID-144 BKR 31 E-14 SH. 12

120V AC AT 1A20405 (12256 SH 27)

CSW LATERAL

CSW LAT

CSW TEST

CSW TRIP

CSW CLOSE

CSW LAT LOCKOUT

CSW LAT HZ

CSW LATERAL

CSW LAT

CSW TEST

CSW LAT

This drawing and the design it conveys are the property of BECHTEL. They are merely loaned and on the borrower's express agreement that they will not be reproduced, copied, loaned, exhibited nor used except as may be permitted by any written consent given by the lender to the borrower.

4.16KV, 3PHASE, 60HZ BUS (B) (1A202) CUB 05

POWER | RUN: CLOSING, TEST, MANUAL, AUTO | INDICATION: SPRING CHARGED, STOP | STOP: RUN, TEST, MANUAL | FEEDER OVERCURRENT (50/51) | BUS U/V (27A) | BUS L/O (86A) | FDR GRD O/C (50A9) | FLAG RESET | COMPUTER (E 301, SH 23, 72) UNIT 1 (EA250), UNIT 2 (EA250)

DEVICE

CSW LATERAL

125V DC BUS AT 4.16 KV SWITCHGEAR 1A202 FROM 1D824 SHT 4 & 31, E-69, SH 11

125V AC AT 1A20205 FROM 1L824A SHT 21 (E-268 SH 2)

ALARM (E-324, SH.18)

STATUS INDICATION (E-155 SH 9)

PUMP OUT OF SERVICE | CS PUMP B AUTO TRIP | MOTOR OVERLOAD

TOTAL HOURS METER

CONTROL SWITCH: 43W-1A20205
WESTINGHOUSE TYPE W2 PISTOL GRIP HANDLE
SPRING RETURN TO NORMAL
NOTE: LATERAL CONTACT ACTION IS INDEPENDENT OF ROTARY CONTACT ACTION AND MUST BREAK BEFORE MAKE IN BOTH DIRECTIONS.

AMMETER SWITCH: AS-1A20205
WESTINGHOUSE TYPE W2 W/ ROUND FIXED HANDLE
MAINTAINED CONTACTS
ARE INDEPENDENT CIRCUIT WITH OFF

* Normally closed contacts of W-2 switches with spring return to neutral are not to be used in a safety-related circuit which functions in a positive manner to mitigate a design basis event, refer to NRC IE Bulletin 80-20 and MLI-9711.

CONTROL SWITCH: HS-20205
G.E. TYPE CR2940(P.B) (NOTE 6)
MOMENTARY CONTACTS

CORE SPRAY PUMP 1P203
SCHEME No. 10802

CORE SPRAY PUMP B
STOP | AUTO | START
1C601 F.V.

NOTES:
1. FOR STANDARD SYMBOLS FOR ELECTRICAL DIAGRAM SEE DWG 8856-E-42
2. ALL DEVICE NOS TO BE SUFFIXED BY BREAKER LOCATION N2 UNLESS NOTED OTHERWISE.
3. CONTACT CLOSES ON CORE SPRAY SYSTEM INITIATION AND REMAINS CLOSED UNTIL RESET.
4. 2K Ω RESISTOR TO BE PURCHASED AND INSTALLED IN SWGR 1A20205 BY FIELD (REF E-40 SH. 7A)
5. DESIGN BASED ON G.E. APED MARKED ELEMENTARY # 7918419WJ (V/P 8856-MI-E21-35)
6. PURCHASED AND INSTALLED BY FIELD (E40 SH. 3K, 5x, 5Y & 5Z). DCP 451-1

UNCONTROLLED DOCUMENT FOR REFERENCE ONLY

No.	DATE	REVISIONS	BY	CHK	ENGR	ENGR	APPR
4	7/9/84	REV'D STOP CKT (DCR 596 (DCP-451-2 R1)) REPLACED 5A & 5Y (DCR 629 (DCP 529-2E 4th))	EAR	JW	TC	GB	BH
3	8/5/83	INSERT FROM # 5 (DCP-451-2, REV-03) ; FROM # 4 (DCP 608, 43, REV-01) REVISED NOTE #5 PER DCN #1 (DCR 008); ADD NOTE TO DWG (DCR 4-43)	EAR	JW	TC	GB	BH
2	4/4/83	REV'D 52 SECTION RATIO (AT 4 PLACES) REVISED 43 & 52AL (WERE 4A, 7A & 4B AS SHOWN) ADD NEW SW #7, ADDED COMPANY NO (DCR 43)	JK	JW	TC	GB	BH
1	1/19/83	Re-Issue to change DWG. No. from 133	JK	JW	TC	GB	BH
0	9/1/82	ISSUED "AS BUILT" REV'D 4.16 KV BUS 10 NO (DCR 6138 INC FOR #10690 DFT-13 REV 2 WAS INCORP IN REV 2 W.A. S-10).	TJY	JW	VA	GT	
A	7/7/81	ISSUED FOR CONSTRUCTION	JK	JW	TC	GB	BH

PENNSYLVANIA POWER & LIGHT COMPANY
ALLENTOWN, PENNSYLVANIA
SUSQUEHANNA STEAM ELECTRIC STATION – UNIT 1, UNIT 2
BECHTEL - SAN FRANCISCO

SCHEMATIC DIAGRAM
CORE SPRAY PUMP 1B
UNIT 1

JOB No.	DRAWING No.	REV.
8856	E-156 SH 2	14

D-107305 SH 2

REFERENCE DWG'S	
BECHTEL No.	PP&L No.
8-42	A-107191
8-29 SH 2	B-107172
8-109 SH 5	D-107292
8-3	B-107154
8856-MI-E21-35	FF-126510

THIS DOCUMENT IS UNDER PP&L ADMINISTRATIVE CONTROL. NO CHANGES CAN BE MADE WITHOUT PRIOR PP&L APPROVAL

EDWARD K. KANG PROFESSIONAL ENGINEER

F/C-BK | F/C-NM | F/C-BF | F/C-KP

24X
I certify that the microfilmed image contained on this microform were made in the normal and regular course of business. This is a true, full, correct and complete reproduction and replacement for and/or in lieu of original documents generated by the Docket group of companies.
Signed RHEY Date 6/7/82 Camera Type MRG-1 Camera Operator
PRC APERTURE CARD
Docket # 50-387
Control # 8303220117-12
Date 3/10/83 of Document:
REGULATORY DOCKET FILE
D

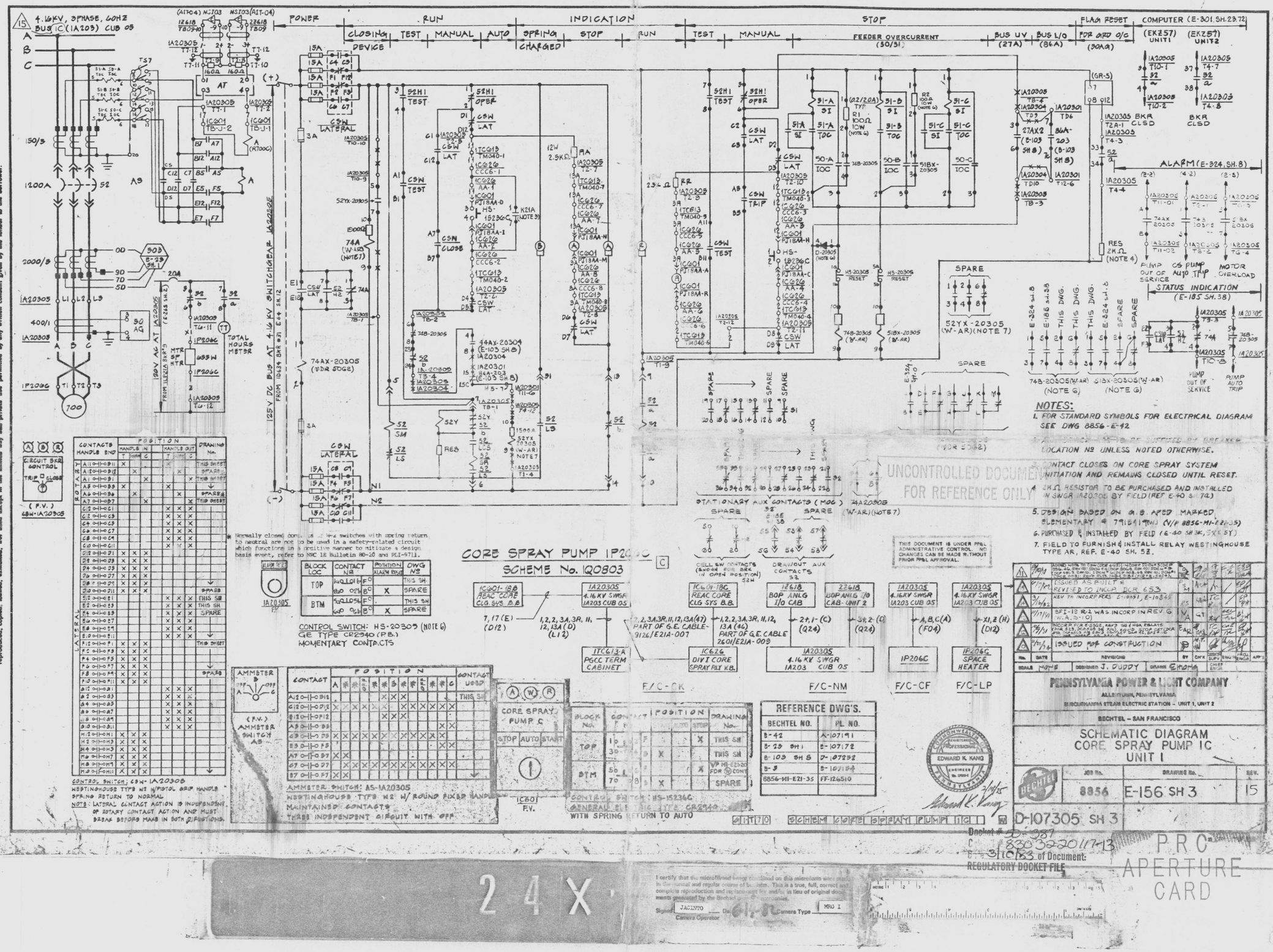
4.16KV, 3PHASE, 60HZ BUS 1C (1A203) CUB 05
POWER
INDICATION
RUN
STOP
CLOSING
TEST
MANUAL
AUTO
SPRING CHARGED
DEVICE
FEEDER OVERCURRENT (50/51)
BUS UV (27A)
BUS L/O (86A)
FLAG RESET
COMPUTER (E-301, SH. 23, 72)
(EK257) UNIT1
(EK257) UNIT2
52H1 TEST
52H1 OPER
CSW LAT
CSW TEST
CSW TRIP
CSW CLOSE
CSW LATERAL
52YX-20305
74AX-20305 (NOR STOP)
74A (W-AR) (NOTE 7)
74AX-20304
(E-103 SH.8)
1A20301 86A-203 (E-103 SH.8)
52Y
RES
52 SM
52 LS
52 L3
1500A
52YX 20305 (W-AR) NOTE 7
51-A SI
51-A TOC
50-A IOC
51-B SI
51-B TOC
50-B IOC
51-C SI
51-C TOC
50-C IOC
51BX-20305
74B-20305 (W-AR)
RR 100Ω 10W (NOTE 6)
R1 100Ω 10W (NOTE 6)
(22/20A) TYP.
D-20305 (NOTE 6)
HS-152366
HS-20305 RESET
K21A (NOTE 3)
27AX2 (B-103 SH.8)
86A-203 (B-103 SH.8)
RES 2KΩ (NOTE 4)
ALARM (E-324, SH.8)
PUMP OUT OF SERVICE
CS PUMP AUTO TRIP
MOTOR OVERLOAD
STATUS INDICATION (E-185 SH.3B)
PUMP OUT OF SERVICE
PUMP AUTO TRIP
SPARE
52YX-20305 (W-AR) (NOTE 7)
74B-20305(W-AR) (NOTE 6)
51BX-20305(W-AR) (NOTE 6)
STATIONARY AUX CONTACTS (M06) 4A20308 (W-AR) (NOTE 7)
CELL SW CONTACTS (SHOWN FOR BRK IN OPEN POSITION) 52H
DRAWOUT AUX CONTACTS 52
THIS DOCUMENT IS UNDER PP&L ADMINISTRATIVE CONTROL. NO CHANGES CAN BE MADE WITHOUT PRIOR PP&L APPROVAL.
UNCONTROLLED DOCUMENT FOR REFERENCE ONLY
CIRCUIT BKR CONTROL
TRIP CLOSE
(F.V.) 43W-1A20305
CONTACTS HANDLE END
POSITION
HANDLE IN
HANDLE OUT
DRAWING No.
CONTROL SWITCH: 43W-1A20308
WESTINGHOUSE TYPE W2 W/PISTOL GRIP HANDLE
SPRING RETURN TO NORMAL
NOTE: LATERAL CONTACT ACTION IS INDEPENDENT OF ROTARY CONTACT ACTION AND MUST BREAK BEFORE MAKE IN BOTH DIRECTIONS.
* Normally closed contacts of 52 switches with spring return to neutral are not to be used in a safety-related circuit which functions in a positive manner to mitigate a design basis event, refer to NRC IE Bulletin 80-20 and PLI-5711.
ALARM RESET
1A20305 T7-3
BLOCK LOC
CONTACT No.
POSITION
ALARM RESET
DWG No.
CONTROL SWITCH: HS-20305 (NOTE 6)
GE TYPE CR2940 (P.B.)
MOMENTARY CONTACTS
CORE SPRAY PUMP 1P20[illegible]C
SCHEME No. 1Q0803
1C601-18B REAC CORE CLG SYS B.B.
1A20305 4.16 KV SWGR 1A203 CUB 05
7, 17 (E) (D12)
1, 2, 2, 3A, 3R, 11, 12, 13A (D) (L12)
1, 2, 2, 3A, 3R, 11, 12, 13A (47) PART OF G.E. CABLE-9126/E21A-007
1, 2, 2, 3A, 3R, 11, 12, 13A (46) PART OF G.E. CABLE 2601/E21A-009
24, 1- (C) (Q24)
34, 2 (C) (Q24)
A, B, C (A) (F04)
X1, 2 (H) (D12)
1C601-18C REAC CORE CLG SYS B.B.
12618 BOP ANLG I/O CAB
23618 BOP ANLG I/O CAB-UNIT 2
1A20305 4.16KV SWGR 1A203 CUB 05
1A20305 4.16KV SWGR 1A203 CUB 05
ITC613-A PGCC TERM CABINET
1C626 DIV I CORE SPRAY PLY K.B.
1A20305 4.16 KV SWGR 1A203 CUB 05
1P206C
1P206C SPACE HEATER
F/C-CK
F/C-NM
F/C-CF
F/C-LP
AMMETER SWITCH AS
(F.V.) AMMETER SWITCH AS
CONTACT
POSITION
CONTACT USED
AMMETER SWITCH: AS-1A20305
WESTINGHOUSE TYPE W2 W/ ROUND FIXED HANDLE
MAINTAINED CONTACTS
THREE INDEPENDENT CIRCUIT WITH OFF
A W R
CORE SPRAY PUMP C
STOP AUTO START
1C601 F.V.
BLOCK No.
CONTACT No.
POSITION
DRAWING No.
CONTROL SWITCH: HS-15234C
GENERAL ELECTRIC TYPE CR2940
WITH SPRING RETURN TO AUTO
REFERENCE DWG'S.
BECHTEL NO.
PL. NO.
8-42
A-107191
8-29 SH 1
B-107172
8-103 SH 8
D-107252
8-3
B-107154
8856-MI-E21-35
FF-126510
EDWARD K. KANG
ENGINEER
No. 20084
COMMONWEALTH OF PENNSYLVANIA
PROFESSIONAL
2/19/85
NOTES:
1. FOR STANDARD SYMBOLS FOR ELECTRICAL DIAGRAM SEE DWG 8856-E-42
2. [illegible] TO BE SUPPLIED BY BREAKER LOCATION N2 UNLESS NOTED OTHERWISE.
3. CONTACT CLOSES ON CORE SPRAY SYSTEM INITIATION AND REMAINS CLOSED UNTIL RESET.
4. 2K Ω RESISTOR TO BE PURCHASED AND INSTALLED IN SWGR 1A20306 BY FIELD (REF E-40 SH 74)
5. DEVICE IS BASED ON G.E. TYPE MARKED ELEMENTARY # 7915A1TMJ (V/P 8856-MI-E21-35)
6. PURCHASED & INSTALLED BY FIELD (E-40 SH 3K, 5K & 5Y)
7. FIELD TO FURNISH & INSTALL RELAY WESTINGHOUSE TYPE AR, REF. E-40 SH. 5Z.
REVISIONS
DESIGNED J. DUDDY
PENNSYLVANIA POWER & LIGHT COMPANY
ALLENTOWN, PENNSYLVANIA
SUSQUEHANNA STEAM ELECTRIC STATION - UNIT 1, UNIT 2
BECHTEL - SAN FRANCISCO
SCHEMATIC DIAGRAM CORE SPRAY PUMP 1C UNIT 1
JOB No. 8856
DRAWING No. E-156 SH 3
REV. 15
D-107305 SH 3
This drawing and the design it covers are the property of BECHTEL. They are merely loaned and on the borrower's express agreement that they will not be reproduced, copied, loaned, exhibited, nor used except in the limited way and purpose use permitted by any written consent given by the lender to the borrower.
Docket # 50-387
#8503220117-13
Title of Document: REGULATORY DOCKET FILE
PRC APERTURE CARD
24X
I certify that the microfilmed image contained on this microform were made in the normal and regular course of business. This is a true, full, correct and complete reproduction and replacement for and/or in lieu of original documents generated by the Bechtel companies.
Signed JACINTO Date 6/4/85 Camera Type MRO I
Camera Operator

This drawing and the design it covers are the property of BECHTEL. They are merely loaned on the borrower's express agreement that they will not be reproduced, copied, loaned, exhibited, nor used except in the limited way and purpose permitted by any written consent given by the lender to the borrower.

4.16KV, 3PHASE, 60HZ BUS 1B (1A204) CUB 05

POWER | RUN: CLOSING DEVICE, TEST, MANUAL, AUTO | INDICATION: SPRING CHARGED, STOP, RUN | STOP: TEST, MANUAL AUTO | FEEDER OVERCURRENT (50/51) | BUS UV (27A) | BUS L/O (86A) | FDR GRD O/C (50A/G) | FLAG RESET | COMPUTER (F-301, SH. 23, 72) (EK763) UNIT 1 (EK203) UNIT 2

125V DC BUS AT 4.16 KV SWITCHGEAR 1A204 FROM ID-144 BKR 31 E-14 SH. 12

120V AC AT 1A20405 (12256 SH 27)

CSW LATERAL

CSW LAT

CSW TEST

CSW TRIP

CSW CLOSE

CSW LAT LOCKOUT

CSW LAT HZ

CSW LATERAL

CSW LAT

CSW TEST

CSW LAT

This drawing and the design it covers are the property of BECHTEL. They are merely loaned and on the borrower's express agreement that they will not be reproduced, copied, loaned, exhibited, nor used except in the limited way and privats use permitted by any written consent given by the lender to the borrower.

4.16KV, 3PHASE, 60HZ BUS 2A (2A201) CUB 05

POWER | RUN: CLOSING DEVICE, TEST, MANUAL, AUTO | INDICATION: SPRING CHARGED, STOP, RUN | STOP: TEST, MANUAL, FEEDER OVERCURRENT (50/51), BUS UV (27A), BUS L/O (86A), FLAG RESET, COMPUTER (E-30A SH29/74) UNIT1 (EK2-73) UNIT2 (EK2-73)

CORE SPRAY PUMP 2P206A

SCHEME No.2Q0801

STATIONARY AUX CONTACTS (MOC) (52)

CONTROL SWITCH: C6W-2A20105
WESTINGHOUSE TYPE W2 W/PISTOL GRIP HANDLE - SPRING RETURN TO NORMAL
NOTE: LATERAL CONTACT ACTION IS INDEPENDENT OF ROTARY CONTACT ACTION AND MUST BREAK BEFORE MAKE IN BOTH DIRECTIONS.

AMMETER SWITCH: AS-2A20105
WESTINGHOUSE TYPE W2 W/ ROUND FIXED HANDLE
MAINTAINED CONTACTS
THREE INDEPENDENT CIRCUIT WITH OFF

CONTROL SWITCH: HS-25236A (35A)
GENERAL ELECTRIC TYPE CR2940
WITH SPRING RETURN TO AUTO

CONTROL SWITCH: HS-20105 (NOTE 6 & 8)
6B. TYPE CR2940 P.B.CAT.# WA208 B
MOMENTARY CONTACT

NOTES:
1. FOR ELECTRICAL SYMBOLS FOR ELECTRICAL SEE DWG 8856-E-42.
2. ALL DEVICE NOS. TO BE SUFFIXED BY BREAKER LOCATION NO. UNLESS NOTED OTHERWISE.
3. CONTACT CLOSES ON CORE SPRAY SYSTEM INITIATION AND REMAINS CLOSED UNTIL RESET.
4. DESIGN BASED ON G.E. NED ELEMENTARY # 791E419AE (M1-E21-20(3&5))
5. 2KΩ RESISTOR TO BE PURCHASED AND INSTALLED IN SWGR 2A20105. (REF. E40 SH 7a).
6. PURCHASED & INSTALLED BY FIELD (E-40 SH. 3K, 5K & 5Y)

No.	DATE	REVISIONS	BY	CHK'D	DESIGN SUPV.	ENG'G	PROJ. ENGR.	APP'D
5	12/9/82	ADDED MISSING RLY NO's (DCR #42)	U-L	PDH				
4	8/4/82	REPLACED RLY 74A1 REVISED 27AX2 & 86A CONN PER DCR 245 & REV'D. DCP 365 REV 0 (PDT MCM)	MP					
3	7/1/82	ADDED NOTE FOR C6W (DCR 439); REPLACED 74B & S1BX RLYS, ADD R1 & 2 BKR. ANTI PUMPING RLY INTLK (DCR 451, DCP 451-6 REV 0)	JP	NRJ				
2	4/1/82	R2V TO INCOR C6W # (DCP 393 REV 4) & DCP 393 NA: INCORP CN REV 8	AC	EAA				
1	1/1/82	ISSUED FOR CONSTRUCTION	ITB					

SCALE ~ | DESIGNED I.T.BUTANI | DRAWN | CHK'R ENGR.

PENNSYLVANIA POWER & LIGHT COMPANY
ALLENTOWN, PENNSYLVANIA
SUSQUEHANNA STEAM ELECTRIC STATION - UNIT 1, UNIT 2
BECHTEL - SAN FRANCISCO

SCHEMATIC DIAGRAM
CORE SPRAY PUMP 2A
UNIT 2

JOB No.	DRAWING No.	REV.
8856	E-156 SH. 5	9

D-107305 SH5

UNCONTROLLED DOCUMENT FOR REFERENCE ONLY
Docket #50-387
Control #8303220117
Date 3/10/83 of Document:
REGULATORY DOCKET FILE

24X
I certify that the microfilmed image contained on this microform were made in the normal and regular course of business. This is a true, full, correct and complete reproduction and replacement for and/or in lieu of original documents generated by the Bechtel company.
Signed JASMINO Date 8-20-82 Camera Type XRG I
Camera Operator
P.R.D. APERTURE CARD

This drawing and the design it covers are the property of BECHTEL. They are merely loaned and on the borrower's express agreement that they will not be reproduced, copied, loaned, exhibited, nor used except in the limited way and purpose permitted by any written consent given by the lender to the borrower.

4.16KV, 3PHASE, 60HZ BUS 2B (2A202) CUB 05

FROM 20624-B-K26 (E-64 SH 21)

125V DC BUS AT 4.16 KV SWITCHGEAR 2A20205

POWER | RUN: CLOSING DEVICE, TEST, MANUAL, AUTO | INDICATION: SPRING CHARGED, STOP, RUN | STOP: TEST, MANUAL, FEEDER OVERCURRENT (50/51), BUS UV (27A), BUS L/O (96A) | FLAG RESET | FOR ORD O/C (50A) | COMPUTER (E-301, SH.25/4): (EKZ 79) UNIT 1, (EKZ 79) UNIT 2

BKR CLOSED

BKR CLOSED

ALARM

CORE SPRAY SYSTEM 2 OUT OF SERVICE

CS PUMP B TRIP

CS PUMP B MOTOR OL

STATUS INDICATION (E-155 SH.18)

PUMP OUT OF SERVICE

74B-20205 (NOTE 6) (W-AR)

51BX-20205 (NOTE 6) (W-AR)

74A (W-AR)

TOTAL HOURS METER

CSW LATERAL

CORE SPRAY PUMP 2P2063

SCHEME No. 2Q0802

STATIONARY AUX CONTACTS (M06) 52

CONTROL SWITCH: HS-20205 GE TYPE CR2940 (A.B.) MOMENTARY CONTACTS (SEE NOTES 6 & 8)

CONTROL SWITCH: CSW-2A20205 WESTINGHOUSE TYPE W2 W/PISTOL GRIP HANDLE SPRING RETURN TO NORMAL

NOTE: LATERAL CONTACT ACTION IS INDEPENDENT OF ROTARY CONTACT ACTION AND MUST BABAK BEFORE MAKE IN BOTH DIRECTIONS.

AMMETER SWITCH: AS-2A20205 WESTINGHOUSE TYPE W2 W/ ROUND FIXED HANDLE MAINTAINED CONTACTS THREE INDEPENDENT CIRCUIT WITH OFF

CONTROL SWITCH: HS-25236B GENERAL ELECTRIC TYPE CR2940 WITH SPRING RETURN TO AUTO

F/C-BK | F/C-NM | F/C-BF | F/C-KR

NOTES:

1. FOR STANDARD SYMBOLS FOR ELECTRICAL DIAGRAM SEE DWG 8856-E-42
2. ALL DEVICES TO BE SHIFFED BY BREAKER LOCATION N2 UNLESS NOTED OTHERWISE.
3. CONTACT CLOSES ON CORE SPRAY SYSTEM INITIATION AND REMAINS CLOSED UNTIL RESET.
4. DESIGN BASED ON G.E. NED ELEMENTARY #791E419E (CIMI-E21-20(6))
5. 2 K.Ω. RESISTOR TO BE PURCHASED & INSTALLED IN SWGR 2A20205 BY FIELD. (REF. E-40 SH. 7A).
6. PURCHASED & INSTALLED BY FIELD (REF. E-40 SH. 2K, 5K & 8Y)
8. THIS SWITCH IS MODIFIED WITH A COMPLETE CUTOUTAL RING-HARDWARE KIT, CAT. NO. G.E. CR2940Y200B. (REF. B-40 SH. 3P)

NO.	DATE	REVISIONS	BY	CHK'R	DESIGN SUPV.	ENG'G MGR.	APP'D
8	9/14/87	REV PER DCR 693 & DCN 1, D (DCP 693.2 & DCR 693)	RC	[illegible]	[illegible]	[illegible]	[illegible]
7	9/1/87	REVISED PER DCP 651, REV 0, DCP 523, REV 0 (SPR 2523 & DCR 693 & INCORP DCN 1)	MRZ	[illegible]	[illegible]	[illegible]	[illegible]
6	7/31/87	ADDED NOTE FOR CSW (DCR #459)	MR	TN	[illegible]	[illegible]	[illegible]
5	7/24/87	REV 660 SENSOR RATIO (SPR 1610, AS BUILT) REV CODE FOR CABLE (N1)(C&A1), ADDED COMP ALT NO (DCR 682) MISC CORRECTIONS	AB	[illegible]	[illegible]	[illegible]	[illegible]
4	9/1/86	ISSUED FOR CONSTRUCTION	ITB	MC	[illegible]	[illegible]	[illegible]

SCALE: — | DESIGNED: I.T. BUTANI | DRAWN: | CHK'R ENGR.:

PENNSYLVANIA POWER & LIGHT COMPANY

ALLENTOWN, PENNSYLVANIA

SUSQUEHANNA STEAM ELECTRIC STATION — UNIT 1, UNIT 2

BECHTEL — SAN FRANCISCO

SCHEMATIC DIAGRAM CORE SPRAY PUMP 2B UNIT 2

JOB No.	DRAWING No.	REV.
8856	E-156 SH 6	8

D-107305 SH 6

REFERENCE DWG'S.	
BECHTEL NO.	PL NO.
B-42	A-107191
B-23 SH. 4	B-107172
B-103 SH. 17	P-107292
B-3	B-107134
8856-M1-E21-20	FF-126510
E-265	D-107414

UNCONTROLLED DOCUMENT FOR REFERENCE ONLY

Docket #50-387
Control #8303220176
Date: 3/10/83 of Document:
REGULATORY DOCKET FILE

24X

I certify that the microfilmed image contained on this microfilm were made in the normal and regular course of business. This is a true, full, correct and complete reproduction and replacement for and/or in lieu of original documents generated by the Bechtel org[illegible] companies.
Signed: JACINTO Date: 6-20-82 Camera Type: MRC I
Camera Operator

P.R.C. APERTURE CARD

This drawing and the design it covers are the property of BECHTEL. They are merely loaned on the borrower's express agreement that they will not be reproduced, copied, loaned, exhibited, nor used except in the limited way and private use permitted by any written consent given by the lender to the borrower.

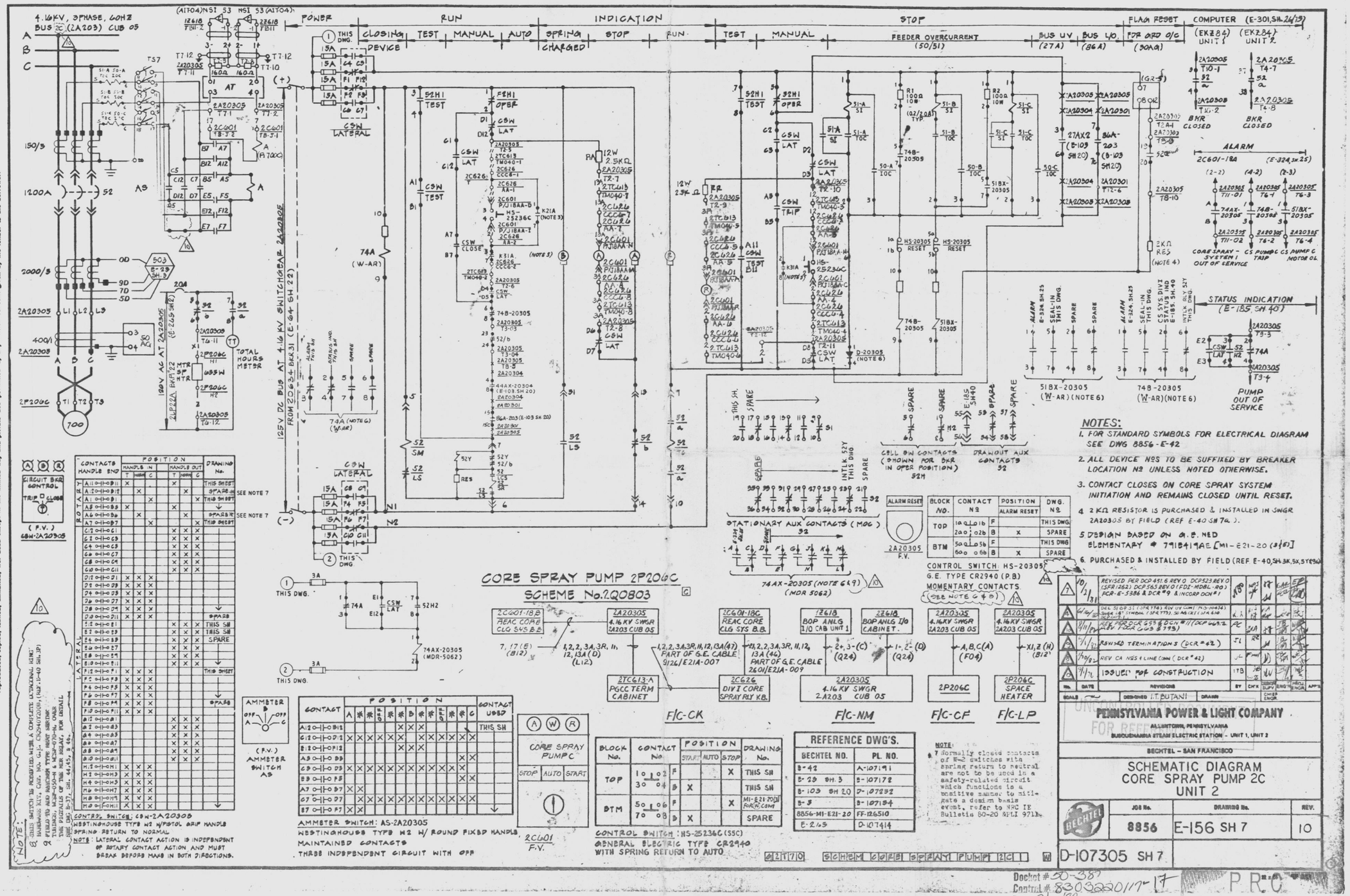

Docket # 50-387
Control # 8303220117
Date 3/10/83 of Document:
REGULATORY DOCKET FILE
P.R.C. APERTURE CARD
24X
I certify that the microfilmed image contained on this microform were made in the normal and regular course of business. This is a true, full, correct and complete reproduction and replacement for and/or in lieu of original documents generated by the Bechtel organizations.
Signed _____ Date 6-30-82 Camera Type MRC I
Camera Operator

This drawing and the design it covers are the property of BECHTEL. They are merely loaned out on the borrower's express agreement that they will not be reproduced, copied, loaned, exhibited, nor used except in the limited way and purpose permitted by any written consent given by the lender to the borrower.

4.16KV, 3PHASE, 60HZ BUS 2D (2A204) CUB 05

POWER | RUN | INDICATION | STOP | FLAG RESET | COMPUTER (E-301, SH. 28/75)

CLOSING DEVICE | TEST | MANUAL | AUTO | SPRING CHARGED | STOP | RUN | TEST | MANUAL | (50/51) | BUS UV (27A) | BUS L/O (86A) | FOR ARD O/C (30A-a) | (EK188) UNIT 1 | (EK188) UNIT 2

CORE SPRAY PUMP 2P206D

SCHEME No. 2Q0804

F/C-DK | F/C-NM | F/C-DF | F/C-MP

NOTES:

1. FOR STANDARD SYMBOLS FOR ELECTRICAL DIAGRAM SEE DWG 8856-E-42
2. ALL DEVICE NOS TO BE SUFFIXED BY BREAKER LOCATION NO. UNLESS NOTED OTHERWISE.
3. CONTACT CLOSES ON CORE SPRAY SYSTEM INITIATION AND REMAINS CLOSED UNTIL RESET
4. 2KΩ RESISTOR TO BE PURCHASED & INSTALLED IN SWGR 2A20405 BY FIELD (REF E-40 SH. 7B)
5. DESIGN BASED ON G.E. NED ELEMENTARY 210E419PAE [MI-E2P-2064-65]
6. PURCHASED & INSTALLED BY FIELD (REF E-40 SH. 3K, 5Y, 5Z & 7H)
7. THIS SWITCH IS MODIFIED WITH A COMPLETE OCTAGONAL RING HARDWARE KIT, CAT. NO. G.E. CR2940Y2008 (REF. E-40 SH. 3P)
8. FIELD TO ADD RAYCHEM TYPE HEAT SHRINK TUBINGS, NCSF-080-N & NCSF-070-N, OVER THE PIGTAILS OF THE MDR RELAY. FOR DETAIL SEE DWG E-37 SH. 44, 45 & 46.

NO.	DATE	REVISIONS	BY	CHK'D	ENGR'G	SUPV	APP'D
9	5/6/82	REVISED TERMINATIONS (DCR 42)	TL	RB			
8	11/4/81	MISC. CORRECTION (RECALLED 10/27 CHANGES PER DCP 457, REV 0, DCP 538 AND DCP 615, REV 0	JB	HRH	RT		
7	10/1/81	REVISED PER DCP 451, REV 0, DCP 523 REV 0 (SFR 1262) FDI-MDBL-R0, FCR-E-6387 & SCR 49 & INCORP DCN #1	JB	HRH	RT		
6	3/13/81	REV PER DCR 668, PER 42 & DCN 11 (DCP 483 & DCP 684 & 798) & DEV 71 INCORP PER E-7037, E-6387 & E-6388	LK	HH	RT		
5	3/14/79	ISSUED FOR CONSTRUCTION	ITB	RB			

DESIGNED I.T. BUTANI

PENNSYLVANIA POWER & LIGHT COMPANY

ALLENTOWN, PENNSYLVANIA

SUSQUEHANNA STEAM ELECTRIC STATION - UNIT 1, UNIT 2

BECHTEL - SAN FRANCISCO

SCHEMATIC DIAGRAM CORE SPRAY PUMP 2D UNIT 2

8856 E-156 SH. 10

D-107305, SH. 8

REFERENCE DWG'S.	
BECHTEL NO.	PL. NO.
8-42	A-107191
8-23 SH. 4	2-107178
8-109 SH. 23	2-107235
8-5	5-107154
8856-M1-E21-2	FF-126510
E-269	D-107414

NOTE: T-P R C APERTURE CARD

POOR ORIGINAL

24X

I certify that the microfilmed image contained on this microform were made in the normal and regular course of business. This is a true, full, correct and complete reproduction and replacement for and/or in lieu of original documents generated by the Bechtel group of companies.

Signed DANNY Date 8-25-82 MRC 1

Camera Operator

Docket # 50-387
Control # 8303220117-18
Date 3/10/83 of Document:
REGULATORY DOCKET FILE

This drawing and the design it covers are the property of BECHTEL. They are not to be reproduced, copied, loaned, exhibited, or used except in the limited way and private use permitted by any written consent given by the lender to the borrower.

REACTOR PROTECTION SYSTEM POWER DISTRIBUTION

SCHEME NO 100400
REF 8856-M1-C72-4

"A" RPS POWER SYSTEM

"B" RPS POWER SYSTEM

TO 480V MCC 1B217 CUB 052 DWG E-9 SH 45

TO 480V MCC 1B253 CUB 023 DWG E-9 SH. 52

TO 480V MCC 1B 261 CUB 038 DWG E-9 SH 31

TO 480V MCC 1B227 CUB 033 DWG E-9 SH. 45

1S237A / 1B201A * RPS MOTOR-GENERATOR SET "A"

1S237B / 1B201B * RPS MOTOR-GENERATOR SET "B"

42 — M 25HP — FLY WHEEL — G 120V 1Φ 60HZ 18.75 KVA 0.8 P.F. — 2P 175A

* 1C610 CONTROL ROD TEST CAB — HANDSWITCH (S1)

1X201A RPS ALT. SOURCE TRANS. 480V/120V 1Φ, 60HZ 25KVA

1X201B RPS ALT SOURCE TRANS 480V/120V 1Φ. 60HZ 25KVA

ICB-S003A-A / ICB-S003A-C / ICB-S003A-E / ICB-S003A-G / ICB-S003B-F / ICB-S003B-H / ICB-S003B-B / ICB-S003B-D

1Y201A * RPS PWR DIST PNL A — 42A (K1A) — BUS "A"

1Y201B * RPS PWR DIST PNL B — 42B1 (K1B) — BUS "B"

42A1 (K1A) — 42A2 (K2A) — (CB1A) 200A — 42B2 (K2B) — 42B1 (K1B) — (CB1B) 200A

(CB8A) 100 AMP	(CB7A) 15AMP	(CB2A) 100A	(CB3A) 30A	(CB4A) 15A	(CB5A) 15A	(CB6A) 15A	SPARE	(CB2B) 100A	(CB3B) 30A	(CB4B) 15A	(CB5B) 15A	(CB6B) 15A	(CB7B) 15 AMP	(CB8B) 100 AMP
SPARE	1C661A3 ESS AUX RELAY PNL	1C609 TRIP SYSTEM "A" RPS V.B.	1C608 POWER RANGE NEUTRON MON SYSTEM DWG E-177 SH 2	1C606 RADIATION MONITORING ST LINE "C"	1C622 INBD VLV RELAY BD	1C604 RADIATION MONITORING ST LINE "A" REFUELING FLOOR VENT. MONITORING "A"	SPARE	1C608 POWER RANGE NEUTRON MON SYS DWG E-177 SH 2	1C605 RADIATION MONITORING ST LINE "D"	1C623 OUTBD VLV RELAY BD	1C603 RADIATION MONITORING ST LINE "B" REFUELING FLOOR VENT. MONITORING "B"	1C661B3 ESS AUX RELAY PNL	TRIP SYS "B" RPS V.B.	

FOR CABLE REF DWG # E-44 SH. 17

1Y201A RPS PWR DIST. PNL "A" — X15,Z15(W) (L02) F/C PK — 1TC612-A PGCC TERM CAB [1C661A3]

1Y201B 120V INST. AC DIST. PNL BKR #52-41 — 1C651 SCRAM DISCH ISOL VLV POS. IND. LTS

1Y201B RPS PWR DIST. PNL "B" — X16,Z16(X) (L02) F/C RK — 1TC622-B PGCC TERM CAB [1C661B3]

1D614 (PNL A) 125 VDC PWR DIST PNL 1D614 BKR 09 REF DWG E-26 SH2 — 1TC614 PGCC TERM CAB TO 1C609

FOR CABLE REF DWG # E-44 SH. 11

1D624 (PNL B) 125 VDC PWR DIST PNL 1D624 BKR 11 REF DWG E-26 SH2 — 1TC624 PGCC TERM CAB TO 1C611

1S237A RPS MG SET "A" — A1,B1,C1(A) D23 — 1B217 052 480V MCC 1B217 CUB 052

1S237B RPS MG SET "B" — A2,B2,C2(Z) (S23) F/C RP — 1B227 053 480V MCC 1B227 CUB 033

1TC614-B PGCC TERM CAB TO 1C609 — F/C PP X1,Z1(G) D21 — 1TC622-B PGCC TERM CAB

1TC624-D PGCC TERM CAB TO 1C611 — 1TC624-D PGCC TERM CAB TO 1C633

1X201A RPS ALT SOURCE TRANS A — A,B(B) (D23) — 1B253023 480V MCC 1B253 CUB 023

1X201B RPS ALT SOURCE TRANS B — A3,B3(E) D21 F/C NP — 1B261033 480V MCC 1B261 CUB 033

1G201A RPS MG SET — X3,Z3(G) (R35) — ICB-S003A-A — X3,Z3(R) (R35) NK — X8,Z8(R) D12 — 1Y201A RPS PWR DIST PNL A

1G201B RPS MG SET — X4,Z4(L) (R35) — ICB-S003B-B — X4,Z4(T) (R35) NK — X10,Z10(T) (D12) — X11,Z11(U) (D12) — 1Y201B RPS PWR DIST PNL B

ICB-S003A-C — X7,Z7(S) (D12) — X9,Z9(Q) (D12) — 1TC614-B PGCC TERM CAB TO 1C604

ICB-S003B-D — X12,Z12(V) D12 — 1TC624-D PGCC TERM CAB TO 1C623

X5,Z5(S) (R04) — P/C NP — X5,Z5(W) (R04) — ICB-S003A-E — ICB-S003A-G — 1Y201A RPS PWR DIST PNL A

(BY FLD) X5,Z5(UNSCHED) R04 — F/C NP

X6,Z6(U) R04 — X6,Z6(UNSCHED) BY FLD (R04) — X6,Z6(X) R04 — ICB-S003B-F — ICB-S003B-H — 1Y201B RPS PWR DIST PNL B

F/C NP

1C610 CONTROL ROD TEST CAB — NK — 1,2,3,4,5(K) L05 — F/C AS ABOVE

1Y201A RPS PWR DIST PNL A — 11,12(B) L02 — 21,22(C) (L02) F/C NK — 1Y201B RPS PWR DIST PNL B

F/C AS ABOVE

SEE NOTE 2

NOTES

1. FOR STANDARD SYMBOLS FOR ELECTRICAL DIAGRAMS SEE 8856-E-4E.
2. FOR MAXIMUM RELIABILITY OF THE RPS POWER SUPPLIES, ROUTING OF RPS POWER SYSTEM "A" CABLES MUST UTILIZE RACEWAYS OTHER THAN THOSE USED FOR SYSTEM "B" CABLES. (9)
3. ALL BREAKERS IN THE RPS POWER DISTRIBUTION PANEL 1Y201A/B ARE SINGLE POLE.
4. DEVICE NOS. IN PARENTHESIS ARE G.E. NUMBERS.
5. ALL EQUIPMENT DENOTED BY * SUPPLIED BY G.E.
6. DESIGN BASED ON GE/APED ELEMENTARY MSD6007AE (W/P M1-C72-4)

REFERENCE DWG'S.

BECHTEL NO.	PL NO.
E-4E	6-107191
E-9 SHS 31,38,45	6-107158
E-177 SH 2	6-107326 SH2
E-26 SH 2	6-107175 SH2
8856-M1-C72 SH 1	FF122610
8856-M1-C72 SH 4	FF122610
E-44E	A-107811-4E

NO.	DATE	REVISIONS	BY	CH'K	DESIGN SUPV.	ENG'RING	PROJ ENGR.	APPR.
4	7/31/81	ISSUED AS BUILT	PS	KM		/		
3	9/11/80	INCORP FCR E-11084 & TDCN E5 (DCP 008-53 REV 0)	MHO			/		
2	7/12/79	REVD TO INCORP. TDCN #5 (DCP 393-B) & (DCN #3 (DCP 038)) REISSUED "AS BUILT"	VA	CJM	TC			
1	5/4/78	ISSUED FOR CONSTRUCTION	JS	KM				
0	5/5/77	ISSUED FOR INFORMATION						

SCALE NONE — DESIGNED A. FLIER — DRAWN W.Y. CHAN — CHIEF ENGR.

PENNSYLVANIA POWER & LIGHT COMPANY
ALLENTOWN, PENNSYLVANIA
SUSQUEHANNA STEAM ELECTRIC STATION – UNIT 1, UNIT 2

BECHTEL – SAN FRANCISCO

BLOCK DIAGRAM
REACTOR PROTECTION SYSTEM
POWER DISTRIBUTION, UNIT 1

JOB NO.	DRAWING NO.	REV.
8856	E-157 SH1	9

D-107306SH1

POOR ORIGINAL

PRC APERTURE CARD

UNCONTROLLED DOCUMENT FOR REFERENCE ONLY

24X

I certify that the microfilmed image contained on this microform were made in the normal and regular course of business. This is a true, full, correct and complete reproduction and replacement for and/or in lieu of original documents as received by the United States Patent and Trademark Office.
Signature RHEY Camera Operator — Camera Type MRG-II

Docket # 50-387
Control # 8303220117-19
Date 3/10/83 of Document:
REGULATORY DOCKET FILE

This drawing and the design it covers are the property of BECHTEL. They are merely loaned and on the borrower's express agreement that they will not be reproduced, copied, loaned, exhibited, nor used except in the limited way and private use permitted by any written consent given by the lender to the borrower.

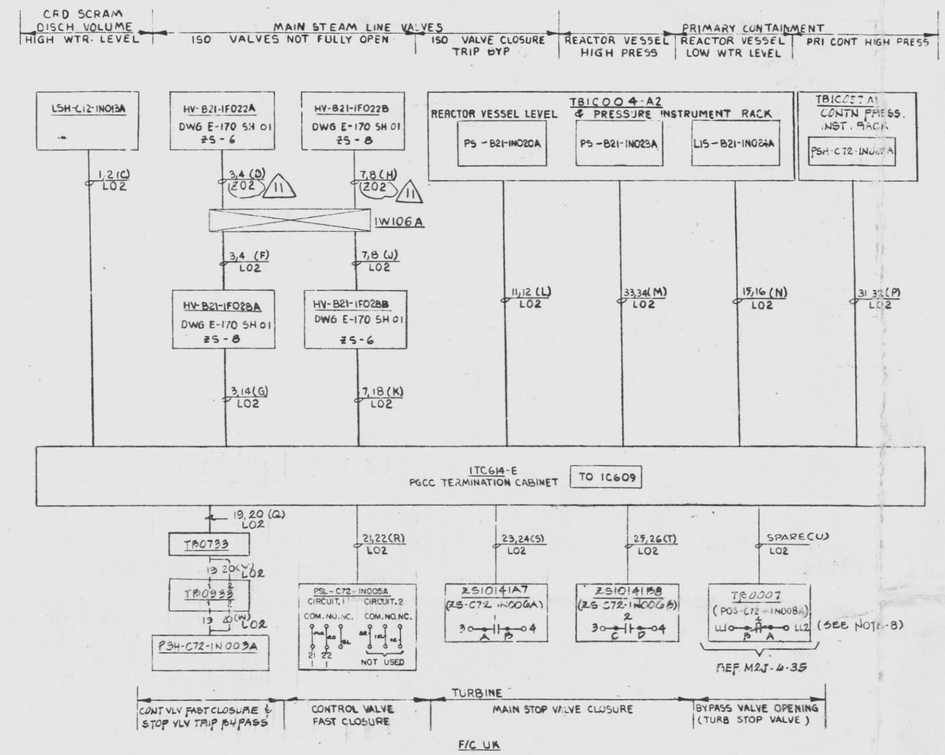

RPS VALVES
SCHEME Nº IQ0401
REF SH 5 & 12

RPS TRIP CHANNEL A1
SCHEME Nº IQ0404
REF SH 6 THRU 9
TYPICAL OF 4 SEE TABLE

SCHEME Nº	FACILITY CODE	DESCRIPTION	PENETRATION	LIMIT SWITCH NO	LOC	NO	LOC	NO	LOC	NO	LOC	LEVEL AND PRESSURE SWITCH NOS			LOC	NO.
IQ0404	UK	RPS TRIP CHANNEL A1	IW106 A	Z5-6	HV-B21-1F022A	Z5-8	HV-B21-1F028A	Z5-8	HV-B21-1F022B	Z5-6	HV-B21-1F028B	PSH-B21-IN023A	PSH-B21-IN020A	LIS-B21-IN024A	TBIC004-A2	PSH-C72-IN003A
IQ0405	VK	A2	IW106 B	Z5-8	C	Z5-6	C	Z5-8	D	Z5-6	D	C	C	C	TBIC005-A1	C
IQ0406	XK	B1	IW106 C	Z5-8	A	Z5-6	A	Z5-6	C	Z5-8	C	B	B	B	TBIC004-B2	B
IQ0407	YK	B2	IW106 D	Z5-6	B	Z5-8	B	Z5-6	D	Z5-8	D	D	D	D	TBIC005-B1	D

LOC	NO	LOC	TURB BYPASS VLV NO	LOC	PRESSURE SWITCH NO	TB# LOC	NO	LOC	TURB STOP VALVE NO	LOC	LOC	CONTROL RM CAB Nº	TERM CAB Nº
TBIC005J-A1	LSH-C12-IN015A	LOCAL	TB0007 Z5101410A1	PSH-C72-IN003A	TB0733 TB0993	LOCAL	(PSL-C72-IN005A)	LOCAL	(Z5-C72-IN006A)	Z5-10141B8	Z5-10141A7	IC609	ITC614-E
TBIC005J-A1		C	TB0007 Z5101410C1	PSH-C72-IN003C	TB0784 TB0994		(PSL-C72-IN005C)		(Z5-C72-IN006D)	D7	C7	IC609	ITC614-D
TBIC005J-A2		B	TB0007 Z5101410B1	PSH-C72-IN003B	TB0735 TB0995		(PSL-C72-IN005B)		(Z5-C72-IN006C)	C8	A8	IC611	ITC624-E
TBIC005K-A2		D	TB0007 Z5101410D1	PSH-C72-IN003D	TB0736 TB0996		(PSL-C72-IN005D)		(Z5-C72-IN006B)	D8	B7	IC611	ITC624-B

NOTES:
1. FOR STANDARD SYMBOLS FOR ELECTRICAL DRAWINGS SEE 8856-E42.
2. DESIGN BASED ON GE/APED ELEMENTARY 781E414WJ (V/P 8854-M1-C72-22)
3. NOS IN PARENTHESIS ARE GE DEVICE NOS.
4. FOR SCHEME IQ0404 (& IQ0405) FIELD TO DISCONNECT INTERNAL WIRING FROM Z5-6 TERMINAL #17 AND CONNECT WIRE #3 & 7 TO TERMINAL #17 OF 1F028A(C) & 1F028B(D) RESPECTIVELY (A5 STATION).
5. FOR SCHEME IQ0406 (&IQ0407) FIELD TO DISCONNECT INTERNAL WIRING FROM Z5-8 TERMINAL #15 AND CONNECT WIRE #5 & 7 TO TERMINAL #15 OF 1F028A(B) & 1F028C(D) RESPECTIVELY (A5 STATION).
6.
7. FIELD TO GROUND THE CONDUITS FOR SCHEMES IQ0404 IQ0405 IQ0406 & IQ0407 AT LEAST ONE PLACE (MIDDLE POINT OF CONDUIT) FOR A SHORT CKT CURRENT RETURN.
8. INSTALL ALL SELECT ROD INSERT COMPONENTS EXCEPT FOR LIMITSWITCHES C72-IN008A-D. DO NOT CONNECT POWER TO ANY INSTALLED SRI COMPONENTS.

UNCONTROLLED DOCUMENT FOR REFERENCE ONLY

PRC APERTURE CARD

REFERENCE DRAWINGS	
BECHTEL NO.	FL. NO.
E-42	M-107319 SH1
E-170-01	D-107319 SH1
8856-M1-C72-22	FF122610

NO.	DATE	REVISIONS	BY	CHK	DESIGN ENG	PROJ ENGR	APP'D
1	7/16/81	REVISED TO INCORPORATE SCN 01 & FCR 81021 (DCR 3)	GM				
2	2/24/82	ADDED TERM BOX & CABLES PER FCR 82-024 & IQ0408 & REVISED LOC NOS	JH				
3	5/21/82	REVISED MSIV LIMIT SWITCH INCORP PER E-3420	JE				
4	7/16/82	REVISED TO INCORP SCN E-3250 ISSUED "AS BUILT"	GM				
5	7/19/82	REVISED TO INCORP IDCN #2 (DCP 6391, REV 5)	KB				
6	8/5/82	INCORP FCR E-3731					
7	12/6/82	INCORP FCR E-3020	MB				
8	4/13/83	ISSUED FOR CONSTRUCTION					
9	4/4/83	ISSUED FOR INFORMATION	DT				

SCALE NONE | DESIGNED A FLIER | DRAWN R. FONG | CHIEF ENGR

PENNSYLVANIA POWER & LIGHT COMPANY
ALLENTOWN, PENNSYLVANIA
SUSQUEHANNA STEAM ELECTRIC STATION — UNIT 1, UNIT 2

BECHTEL — SAN FRANCISCO

BLOCK DIAGRAM REACTOR PROTECTION SYSTEM TRIP CKTS & RPS VALVES UNIT 1

JOB No.	DRAWING No.	REV.
8856	E-157 SH 2	11

D-107306 SH 2

THIS DOCUMENT IS UNDER PP&L ADMINISTRATIVE CONTROL

Docket #50-387
Control #8305220177
Date 3/16/83 of Document
REGULATORY DOCKET FILE

EDWARD K. KANG
REGISTERED 17530E

4/4/83

Edward K. Kang

CUTSO BLK DIAS RPS TRPL U VLVE ST

D

24X

I certify that the microfilmed image contained on this microform were made in the normal and regular course of business. This is a true, full, correct and complete reproduction and replacement for and/or in lieu of original documents generated by the Bechtel group of companies.

Signature JADINTO Date 6-4-83 Camera Type MRC 1
Camera Operator

This drawing and the design it covers are the property of BECHTEL. They are merely loaned and on the borrower's express agreement that they will not be reproduced, copied, loaned, exhibited, nor used except in the limited way and private use permitted by any written consent given by the lender to the borrower.

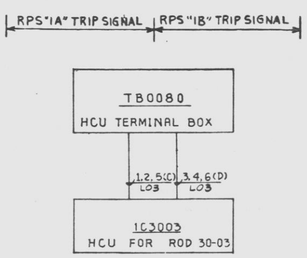

F/C UK

RPS TRIP SIGNAL TO SIG1-1 HCU

SCHEME 1Q0420
REF SH. 12
(TYPICAL FOR 24 -SEE TABLE C)

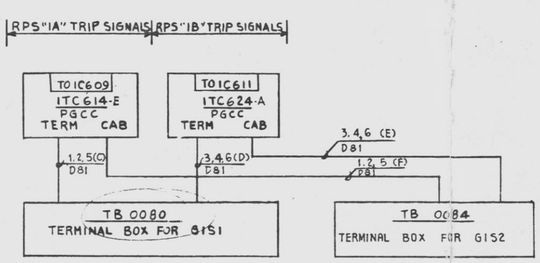

F/C UK

RPS TRIP SIGNALS TO GROUP 1 HCU TERMINAL BOXES

SCHEME 1Q0410
REF SH. 12
(TYPICAL OF 4-SEE TABLE A)

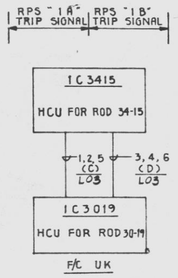

F/C UK

RPS TRIP SIGNAL TO HCU'S

SCHEME 1Q0421
REF SH. 12
(TYPICAL FOR 161 SEE TABLE B)

TABLE A

SCHEME NO	FACILITY CODE	DESCRIPTION	CONTROL CABINET SIGNAL	CONTROL CABINET PGCC	CONTROL CABINET CABINET	HCU TERM BOXES SIDE 1	HCU TERM BOXES SIDE 2	CABLE CODE SIDE 1	CABLE CODE SIDE 2
1Q0410	UK	GROUP 1 RPS TRIP SYSTEM	1A	ITC614-E	IC609	TB0080	TB0084	D81	D81
			1B	ITC624A	IC611			D81	D81
411	VK	2	2A	ITC614A	IC609	TB0081	TB0085	D61	D61
			2B	ITC624E	IC611			D61	D61
412	XK	3	3A	ITC614D	IC609	TB0082	TB0086	D61	D61
			3B	ITC624D	IC611			D61	D81
413	YK	4	4A	ITC615-E	IC609	TB0083	TB0087	D81	D81
			4B	ITC624B	IC611			D61	D61

TABLE B

SCHEME NO	FACILITY CODE	FROM HCU	TO HCU	ROD NO
1Q0421	UK	IC3415	IC3019	30-19
422		IC3823	3035	30-35
423		IC3447	3051	30-51
424		IC3807	3415	34-15
425		IC3035	3431	34-31
426		IC3839	3447	34-47
428		IC3019	3823	38-23
429		IC3431	3839	38-39
430		IC4643	3855	38-55
431		IC5415	4203	42-03
433		IC4627	4235	42-35
434		IC5447	4251	42-51
435		IC3003	4611	46-11
436		IC5023	4627	46-27
437		IC4235	4643	46-43
438		IC4219	5023	50-23
439		IC5843	5039	50-39
440		IC4611	5415	54-15
441		IC5039	5431	54-31
442		IC5431	5447	54-47
443		IC4203	5827	58-27
444		IC5827	5843	58-43

GROUP 1 SIDE 1

SCHEME NO	FACILITY CODE	FROM HCU	TO HCU	ROD NO
1Q0445	UK	IC2659	IC0639	06-39
446		0639	1035	10-35
447		1035	0231	02-31
448		1823	1019	10-19
449		0231	0623	06-23
451		1019	1411	14-11
452		2231	1427	14-27
453		1855	1443	14-43
454		1411	1807	18-07
455		1427	1823	18-23
456		1443	1839	18-39
457		2247	1855	18-55
458		2627	2215	22-15
459		1839	2231	22-31
461		2215	2611	26-11
462		2643	2627	26-27
464		1051	2659	26-59

GROUP 1 SIDE 2

SCHEME NO	FACILITY CODE	FROM HCU	TO HCU	ROD NO
1Q0465	VK	IC5419	IC3403	34-03
466		3435	3419	34-19
467		4239	3435	34-35
469		3419	3811	38-11
470		4631	3827	38-27
473		4615	4207	42-07
474		3827	4223	42-23
475		3843	4239	42-39
476		3451	4255	42-55
477		5027	4615	46-15
478		4647	4631	46-31
479		4255	4647	46-47
480		3403	5011	50-11
481		4223	5027	50-27
482		3859	5043	50-43
483		5831	5419	54-19
484		5043	5435	54-35
485		5435	5831	58-31

GROUP 2 SIDE 1

SCHEME NO	FACILITY CODE	FROM HCU	TO HCU	ROD NO
1Q0486	VK	IC1859	IC0643	06-43
487		1039	0235	02-35
488		1023	0627	06-27
489		1447	1859	18-59
490		1827	1023	10-23
491		0643	1039	10-39
492		0627	1415	14-15
493		0235	1431	14-31
495		1415	1811	18-11
496		2631	1827	18-27
498		1431	0219	02-19
499		0219	2203	22-03
500		3023	2219	22-19
501		1843	2235	22-35
502		3059	2251	22-51
503		2219	2615	26-15
504		2235	2631	26-31
505		2251	2647	26-47
506		2615	3007	30-07
507		3039	3023	30-23
508		2647	3039	30-39

GROUP 2 SIDE 2

SCHEME NO	FACILITY CODE	FROM HCU	TO HCU	ROD NO
1Q0510	XK	IC4227	IC3011	30-11
511		3439	3027	30-27
512		3847	3043	30-43
514		3011	3407	34-07
515		3027	3423	34-23
516		3831	3439	34-39
518		3423	3815	38-15
519		3043	3831	38-31
520		3455	3847	38-47
521		4619	4211	42-11
522		3815	4227	42-27
523		4651	4243	42-43
524		3059	4259	42-59
525		5015	4619	46-19
526		4259	4635	46-35
528		5423	5015	50-15
529		4635	5031	50-31
530		4243	5047	50-47
531		5047	5423	54-23
532		5031	5439	54-39
533		5855	5819	58-19
534		5439	5835	58-35

GROUP 3 SIDE 1

SCHEME NO	FACILITY CODE	FROM HCU	TO HCU	ROD NO
1Q0535	XK	IC0615	IC0223	02-23
536		0631	1831	18-31
537		2603	0615	06-15
538		1831	0239	02-39
539		0239	0647	06-47
540		2207	1011	10-11
541		1815	1027	10-27
542		1847	1043	10-43
543		2619	1419	14-19
544		2223	1435	14-35
545		1043	1451	14-51
546		1011	1815	18-15
547		0223	0631	06-31
548		1435	1847	18-47
550		1027	2223	22-23
551		2635	2239	22-39
552		1451	2255	22-55
555		1419	2635	26-35
556		2239	2651	26-51

GROUP 3 SIDE 2

SCHEME NO	FACILITY CODE	FROM HCU	TO HCU	ROD NO
1Q0557	YK	IC4623	IC3411	34-11
558		3443	3427	34-27
560		4655	3459	34-59
561		5823	3803	38-03
562		5839	3819	38-19
563		4639	3835	38-35
565		3427	4215	42-15
566		3835	4231	42-31
567		3851	4247	42-47
568		5019	4607	46-07
569		4215	4623	46-23
570		4247	4639	46-39
572		3819	5019	50-19
573		5443	5035	50-35
574		3459	5051	50-51
575		5035	5427	54-27
576		5051	5443	54-43
577		5427	5823	58-23
578		4231	5839	58-39

GROUP 4 SIDE 1

SCHEME NO	FACILITY CODE	FROM HCU	TO HCU	ROD NO
1Q0579	YK	IC0635	IC0227	02-27
580		2259	0243	02-43
581		1803	0619	06-19
582		0243	0635	06-35
583		0619	1015	10-15
584		0227	1031	10-31
585		1455	1047	10-47
586		1015	1407	14-07
587		1835	1423	14-23
588		1851	1439	14-39
590		1031	1803	18-03
591		2227	1819	18-19
592		1439	1835	18-35
594		1819	2211	22-11
595		2623	2227	22-27
596		2639	2243	22-43
597		1047	2259	22-59
598		2211	2607	26-07
599		3031	2623	26-23
650		2655	2639	26-39
651		3047	2655	26-55
652		2607	3015	30-15
653		2243	3031	30-31

GROUP 4 SIDE 2

TABLE C

SCHEME NO.	FACILITY CODE	TERMINAL BOX	HCU	ROD NO.	SIDE & GROUP
1Q0420	UK	TB0080	IC3003	30-03	S1-G1-1
1Q0432	UK	TB0080	IC4219	42-19	S1-G1-2
1Q0427	UK	TB0080	IC3807	38-07	S1-G1-3
1Q0472	VK	TB0081	IC3855	38-59	S1-G2-1
1Q0468	VK	TB0081	IC3451	34-51	S1-G2-2
1Q0471	VK	TB0081	IC3843	38-43	S1-G2-3
1Q0513	XK	TB0082	IC3059	30-59	S1-G3-1
1Q0527	XK	TB0082	IC4651	46-51	S1-G3-2
1Q0517	XK	TB0082	IC3455	34-55	S1-G3-3
1Q0571	YK	TB0083	IC4655	46-55	S1-G4-1
1Q0564	YK	TB0083	IC3851	38-51	S1-G4-2
1Q0559	YK	TB0083	IC3443	34-43	S1-G4-3

SCHEME NO.	FACILITY CODE	TERMINAL BOX	HCU	ROD NO.	SIDE & GROUP
1Q0450	UK	TB0084	IC1051	10-51	S2-G1-1
1Q0460	UK	TB0084	IC2247	22-47	S2-G1-2
1Q0463	UK	TB0084	IC2643	26-43	S2-G1-3
1Q0494	VK	TB0085	IC1447	14-47	S2-G2-1
1Q0497	VK	TB0085	IC1843	18-43	S2-G2-2
1Q0509	YK	TB0085	IC3055	30-55	S2-G2-3
1Q0553	XK	TB0086	IC2603	26-03	S2-G3-1
1Q0549	XK	TB0086	IC2207	22-07	S2-G3-2
1Q0554	XK	TB0086	IC2619	26-19	S2-G3-3
1Q0589	YK	TB0087	IC1455	14-55	S2-G4-1
1Q0593	YK	TB0087	IC1851	18-51	S2-G4-2
1Q0654	YK	TB0087	IC3047	30-47	S2-G4-3

REFERENCE DWG'S.	
BECHTEL NO.	PL NO.
E-42	A-107191
E-48	A-107197
8856-MI-C72-22	TF122612

NOTES

1. FOR STANDARD SYMBOLS FOR ELECTRICAL DRAWINGS SEE 8856-E-42
2. FOR TERMINAL BOX SCHEDULE SEE 8856-E-48
3. RPS CABLES ARE ROUTED IN THE RPS RACEWAYS ONLY. SEPARATION IS REQUIRED BETWEEN THE FOUR GROUPS. TRIP SIGNALS ROUTED TO THE SAME GROUP MAY BE PLACED IN THE SAME RACEWAY:
   GROUP 1 – RPS TRIP SIGNALS "1A" AND "1B"
   GROUP 2 – RPS TRIP SIGNALS "2A" AND "2B"
   GROUP 3 – RPS TRIP SIGNALS "3A" AND "3B"
   GROUP 4 – RPS TRIP SIGNALS "4A" AND "4B"
4. DESIGN BASED ON GE/APED ELEMENTRY 791E414WJ (V/P 8856-MI-C72-22).

PRC APERTURE CARD
THIS DOCUMENT IS UNDER PP&L ADMINISTRATIVE CONTROL. NO CHANGES CAN BE MADE WITHOUT PRIOR PP&L APPROVAL.

NO.	DATE	REVISIONS	BY	CHK'R	DESIGN SUPV	ENG'R	PROJ ENGR	APP'D
A	6/7/84	ISSUED "AS-BUILT"	PR	TC	LH		EFH	
A	3/14/84	ISSUED FOR DOCUMENTATION ONLY. FCN #E1844 WAS INCORPORATED IN REV. 4	AM	MJ CM	TC		LH	
A	2/2/80	REVISED TO INCORPORATE FCN 8-1663	BMM	CM	MJ	PB	MJ	
A	11/1/77	ISSUED FOR CONSTRUCTION	C.M.	MJ C.M.	MJ		MJ	
A	5/6/77	ISSUED FOR INFORMATION	GF	MJ	MJ		MJ	

SCALE NONE | DESIGNED A FLIER | DRAWN W.Y.CHAN | CHIEF ENGR.

PENNSYLVANIA POWER & LIGHT COMPANY
ALLENTOWN, PENNSYLVANIA
SUSQUEHANNA STEAM ELECTRIC STATION – UNIT 1, UNIT 2
BECHTEL – SAN FRANCISCO

BLOCK DIAGRAM
REACTOR PROTECTION SYSTEM
TRIP SIGNALS TO HCU'S UNIT 1

BECHTEL	JOB No.	DRAWING No.	REV.
	8856	E-157 SH3	6

D-107306 SH3

Docket # 50-387
Control # 8303220117-21
Date 3/10/83 of Document:
REGULATORY DOCKET FILE

UNCONTROLLED DOCUMENT FOR REFERENCE ONLY

GIIS0 BLK DIAG RPS TRIP SIGNALS M

24X

I certify that the microfilmed image contained on this microform were made in the normal and regular course of business. This is a true, full, correct and complete reproduction and replacement for and/or in lieu of original documents generated by the Bechtel group of companies.
Signed. JACINTO Camera Operator Date 6-14-82 Camera Type MRC 1

D

This drawing and the design it covers are the property of BECHTEL. They are merely loaned and on the borrower's express agreement that they will not be reproduced, copied, loaned, exhibited, nor used except in the limited way and private use permitted by any written consent given by the lender to the borrower.

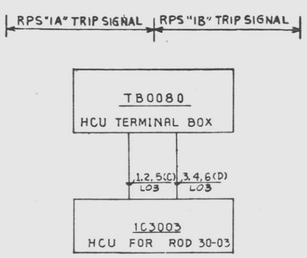

F/C UK

RPS TRIP SIGNAL TO SIG1-1 HCU

SCHEME 1Q0420
REF SH. 12
(TYPICAL FOR 24 -SEE TABLE C)

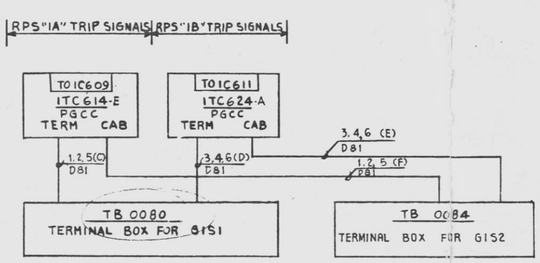

F/C UK

RPS TRIP SIGNALS TO GROUP 1 HCU TERMINAL BOXES

SCHEME 1Q0410
REF SH. 12
(TYPICAL OF 4-SEE TABLE A)

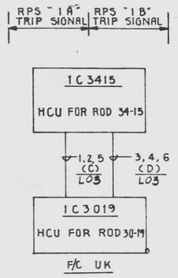

F/C UK

RPS TRIP SIGNAL TO HCU'S

SCHEME 1Q0421
REF SH. 12
(TYPICAL FOR 161 SEE TABLE B)

TABLE A

SCHEME NO	FACILITY CODE	DESCRIPTION	CONTROL CABINET SIGNAL	CONTROL CABINET PGCC	CONTROL CABINET CABINET	HCU TERM BOXES SIDE 1	HCU TERM BOXES SIDE 2	CABLE CODE SIDE 1	CABLE CODE SIDE 2
1Q0410	UK	GROUP 1 RPS TRIP SYSTEM	1A	ITC614-E	IC609	TB0080	TB0084	D81	D81
			1B	ITC624A	IC611			D81	D81
411	VK	2	2A	ITC614A	IC609	TB0081	TB0085	D61	D61
			2B	ITC624E	IC611			D61	D61
412	XK	3	3A	ITC614D	IC609	TB0082	TB0086	D61	D61
			3B	ITC624D	IC611			D61	D81
413	YK	4	4A	ITC615-E	IC609	TB0083	TB0087	D81	D81
			4B	ITC624B	IC611			D61	D61

TABLE B

SCHEME NO	FACILITY CODE	FROM HCU	TO HCU	ROD NO
1Q0421	UK	IC3415	IC3019	30-19
422		IC3823	3035	30-35
423		IC3447	3051	30-51
424		IC3807	3415	34-15
425		IC3035	3431	34-31
426		IC3839	3447	34-47
428		IC3019	3823	38-23
429		IC3431	3839	38-39
430		IC4643	3855	38-55
431		IC5415	4203	42-03
433		IC4627	4235	42-35
434		IC5447	4251	42-51
435		IC3003	4611	46-11
436		IC5023	4627	46-27
437		IC4235	4643	46-43
438		IC4219	5023	50-23
439		IC5843	5039	50-39
440		IC4611	5415	54-15
441		IC5039	5431	54-31
442		IC5431	5447	54-47
443		IC4203	5827	58-27
444		IC5827	5843	58-43

GROUP 1 SIDE 1

SCHEME NO	FACILITY CODE	FROM HCU	TO HCU	ROD NO
1Q0445	UK	IC2659	IC0639	06-39
446		0639	1035	10-35
447		1035	0231	02-31
448		1823	1019	10-19
449		0231	0623	06-23
451		1019	1411	14-11
452		2231	1427	14-27
453		1855	1443	14-43
454		1411	1807	18-07
455		1427	1823	18-23
456		1443	1839	18-39
457		2247	1855	18-55
458		2627	2215	22-15
459		1839	2231	22-31
461		2215	2611	26-11
462		2643	2627	26-27
464		1051	2659	26-59

GROUP 1 SIDE 2

SCHEME NO	FACILITY CODE	FROM HCU	TO HCU	ROD NO
1Q0465	VK	IC5419	IC3403	34-03
466		3435	3419	34-19
467		4239	3435	34-35
469		3419	3811	38-11
470		4631	3827	38-27
473		4615	4207	42-07
474		3827	4223	42-23
475		3843	4239	42-39
476		3451	4255	42-55
477		5027	4615	46-15
478		4647	4631	46-31
479		4255	4647	46-47
480		3403	5011	50-11
481		4223	5027	50-27
482		3859	5043	50-43
483		5831	5419	54-19
484		5043	5435	54-35
485		5435	5831	58-31

GROUP 2 SIDE 1

SCHEME NO	FACILITY CODE	FROM HCU	TO HCU	ROD NO
1Q0486	VK	IC1859	IC0643	06-43
487		1039	0235	02-35
488		1023	0627	06-27
489		1447	1859	18-59
490		1827	1023	10-23
491		0643	1039	10-39
492		0627	1415	14-15
493		0235	1431	14-31
495		1415	1811	18-11
496		2631	1827	18-27
498		1431	0219	02-19
499		0219	2203	22-03
500		3023	2219	22-19
501		1843	2235	22-35
502		3059	2251	22-51
503		2219	2615	26-15
504		2235	2631	26-31
505		2251	2647	26-47
506		2615	3007	30-07
507		3039	3023	30-23
508		2647	3039	30-39

GROUP 2 SIDE 2

SCHEME NO	FACILITY CODE	FROM HCU	TO HCU	ROD NO
1Q0510	XK	IC4227	IC3011	30-11
511		3439	3027	30-27
512		3847	3043	30-43
514		3011	3407	34-07
515		3027	3423	34-23
516		3831	3439	34-39
518		3423	3815	38-15
519		3043	3831	38-31
520		3455	3847	38-47
521		4619	4211	42-11
522		3815	4227	42-27
523		4651	4243	42-43
524		3059	4259	42-59
525		5015	4619	46-19
526		4259	4635	46-35
528		5423	5015	50-15
529		4635	5031	50-31
530		4243	5047	50-47
531		5047	5423	54-23
532		5031	5439	54-39
533		5855	5819	58-19
534		5439	5835	58-35

GROUP 3 SIDE 1

SCHEME NO	FACILITY CODE	FROM HCU	TO HCU	ROD NO
1Q0535	XK	IC0615	IC0223	02-23
536		0631	1831	18-31
537		2603	0615	06-15
538		1831	0239	02-39
539		0239	0647	06-47
540		2207	1011	10-11
541		1815	1027	10-27
542		1847	1043	10-43
543		2619	1419	14-19
544		2223	1435	14-35
545		1043	1451	14-51
546		1011	1815	18-15
547		0223	0631	06-31
548		1435	1847	18-47
550		1027	2223	22-23
551		2635	2239	22-39
552		1451	2255	22-55
555		1419	2635	26-35
556		2239	2651	26-51

GROUP 3 SIDE 2

SCHEME NO	FACILITY CODE	FROM HCU	TO HCU	ROD NO
1Q0557	YK	IC4623	IC3411	34-11
558		3443	3427	34-27
560		4655	3459	34-59
561		5823	3803	38-03
562		5839	3819	38-19
563		4639	3835	38-35
565		3427	4215	42-15
566		3835	4231	42-31
567		3851	4247	42-47
568		5019	4607	46-07
569		4215	4623	46-23
570		4247	4639	46-39
572		3819	5019	50-19
573		5443	5035	50-35
574		3459	5051	50-51
575		5035	5427	54-27
576		5051	5443	54-43
577		5427	5823	58-23
578		4231	5839	58-39

GROUP 4 SIDE 1

SCHEME NO	FACILITY CODE	FROM HCU	TO HCU	ROD NO
1Q0579	YK	IC0635	IC0227	02-27
580		2259	0243	02-43
581		1803	0619	06-19
582		0243	0635	06-35
583		0619	1015	10-15
584		0227	1031	10-31
585		1455	1047	10-47
586		1015	1407	14-07
587		1835	1423	14-23
588		1851	1439	14-39
590		1031	1803	18-03
591		2227	1819	18-19
592		1439	1835	18-35
594		1819	2211	22-11
595		2623	2227	22-27
596		2639	2243	22-43
597		1047	2259	22-59
598		2211	2607	26-07
599		3031	2623	26-23
650		2655	2639	26-39
651		3047	2655	26-55
652		2607	3015	30-15
653		2243	3031	30-31

GROUP 4 SIDE 2

TABLE C

SCHEME NO.	FACILITY CODE	TERMINAL BOX	HCU	ROD NO.	SIDE & GROUP
1Q0420	UK	TB0080	IC3003	30-03	S1-G1-1
1Q0432	UK	TB0080	IC4219	42-19	S1-G1-2
1Q0427	UK	TB0080	IC3807	38-07	S1-G1-3
1Q0472	VK	TB0081	IC3855	38-59	S1-G2-1
1Q0468	VK	TB0081	IC3451	34-51	S1-G2-2
1Q0471	VK	TB0081	IC3843	38-43	S1-G2-3
1Q0513	XK	TB0082	IC3059	30-59	S1-G3-1
1Q0527	XK	TB0082	IC4651	46-51	S1-G3-2
1Q0517	XK	TB0082	IC3455	34-55	S1-G3-3
1Q0571	YK	TB0083	IC4655	46-55	S1-G4-1
1Q0564	YK	TB0083	IC3851	38-51	S1-G4-2
1Q0559	YK	TB0083	IC3443	34-43	S1-G4-3

SCHEME NO.	FACILITY CODE	TERMINAL BOX	HCU	ROD NO.	SIDE & GROUP
1Q0450	UK	TB0084	IC1051	10-51	S2-G1-1
1Q0460	UK	TB0084	IC2247	22-47	S2-G1-2
1Q0463	UK	TB0084	IC2643	26-43	S2-G1-3
1Q0494	VK	TB0085	IC1447	14-47	S2-G2-1
1Q0497	VK	TB0085	IC1843	18-43	S2-G2-2
1Q0509	YK	TB0085	IC3055	30-55	S2-G2-3
1Q0553	XK	TB0086	IC2603	26-03	S2-G3-1
1Q0549	XK	TB0086	IC2207	22-07	S2-G3-2
1Q0554	XK	TB0086	IC2619	26-19	S2-G3-3
1Q0589	YK	TB0087	IC1455	14-55	S2-G4-1
1Q0593	YK	TB0087	IC1851	18-51	S2-G4-2
1Q0654	YK	TB0087	IC3047	30-47	S2-G4-3

REFERENCE DWG'S.	
BECHTEL NO.	PL NO.
E-42	A-107191
E-48	A-107197
8856-MI-C72-22	TF122612

NOTES

1. FOR STANDARD SYMBOLS FOR ELECTRICAL DRAWINGS SEE 8856-E-42
2. FOR TERMINAL BOX SCHEDULE SEE 8856-E-48
3. RPS CABLES ARE ROUTED IN THE RPS RACEWAYS ONLY. SEPARATION IS REQUIRED BETWEEN THE FOUR GROUPS. TRIP SIGNALS ROUTED TO THE SAME GROUP MAY BE PLACED IN THE SAME RACEWAY:
   GROUP 1 – RPS TRIP SIGNALS "1A" AND "1B"
   GROUP 2 – RPS TRIP SIGNALS "2A" AND "2B"
   GROUP 3 – RPS TRIP SIGNALS "3A" AND "3B"
   GROUP 4 – RPS TRIP SIGNALS "4A" AND "4B"
4. DESIGN BASED ON GE/APED ELEMENTRY 791E414WJ (V/P 8856-MI-C72-22).

PRC APERTURE CARD
THIS DOCUMENT IS UNDER PP&L ADMINISTRATIVE CONTROL. NO CHANGES CAN BE MADE WITHOUT PRIOR PP&L APPROVAL.

NO.	DATE	REVISIONS	BY	CHK'R	DESIGN SUPV	ENG'R	PROJ ENGR	APP'D
A	6/7/84	ISSUED "AS-BUILT"	PR	TC	LH		EFH	
A	3/14/84	ISSUED FOR DOCUMENTATION ONLY. FCN #E1844 WAS INCORPORATED IN REV. 4	AM	MJ CM	TC		LH	
A	2/2/80	REVISED TO INCORPORATE FCN 8-1663	BMM	CM	MJ	PB	MJ	
A	11/1/77	ISSUED FOR CONSTRUCTION	C.M.	MJ C.M.	MJ		MJ	
A	5/6/77	ISSUED FOR INFORMATION	GF	MJ	MJ		MJ	

SCALE NONE | DESIGNED A FLIER | DRAWN W.Y.CHAN | CHIEF ENGR.

PENNSYLVANIA POWER & LIGHT COMPANY
ALLENTOWN, PENNSYLVANIA
SUSQUEHANNA STEAM ELECTRIC STATION – UNIT 1, UNIT 2
BECHTEL – SAN FRANCISCO

BLOCK DIAGRAM
REACTOR PROTECTION SYSTEM
TRIP SIGNALS TO HCU'S UNIT 1

BECHTEL	JOB No.	DRAWING No.	REV.
	8856	E-157 SH3	6

D-107306 SH3

Docket # 50-387
Control # 8303220117-21
Date 3/10/83 of Document:
REGULATORY DOCKET FILE

UNCONTROLLED DOCUMENT FOR REFERENCE ONLY

GIIS0 BLK DIAG RPS TRIP SIGNALS M

24X

I certify that the microfilmed image contained on this microform were made in the normal and regular course of business. This is a true, full, correct and complete reproduction and replacement for and/or in lieu of original documents generated by the Bechtel group of companies.
Signed. JACINTO Camera Operator Date 6-14-82 Camera Type MRC 1

D

This drawing and the design it covers are the property of BECHTEL. They are merely loaned and on the borrower's express agreement that they will not be reproduced, copied, loaned, exhibited, nor used except in the limited way and private use permitted by any written consent given by the lender to the borrower.

CRD SCRAM DISCH. VOLUME HIGH WTR. LEVEL | MAIN STEAM LINE VALVES: ISO VALVES NOT FULLY OPEN; ISO VALVE CLOSURE TRIP BYP | PRIMARY CONTAINMENT: REACTOR VESSEL HIGH PRESS; REACTOR VESSEL LOW WTR LEVEL; PRI CONT HIGH PRESS

LSH-C12-2N013A

HV-B21-2F022A DWG E-170 SH.4 ≠5-6

HV-B21-2F022B DWG E-170 SH.4 ≠3-8

TB2C004-A2 REACTOR VESSEL LEVEL & PRESSURE INSTRUMENT RACK: PS-B21-2N020A; PS-B21-2N023A; LIS-B21-2N024A

TB2C05T-A1 CONTAINMENT PRESS INST. RACK: PSH-C72-2N002A

1,2(C) (LO2) | 3,4 (D) (≠02) | 7,8(H) (≠02)

2W106A

3,4 (F) (LO2) | 7,8 (J) (LO2)

HV-B21-2F028A DWG E-170 SH.4 ≠5-8 — SEE NOTE 4 & 5

HV-B21-2F028B DWG E-170 SH. 4 ≠5-6 — SEE NOTE 4 & 5

3,14(G) (LO2) | 7,18(K) (LO2)

11,12 (L) (LO2) | 33,34(M) (LO2) | 15,16 (N) (LO2) | 31,32(P) (LO2)

2TC614-E PGCC TERMINATION CABINET TO 2C609

19,20(Q) (LO2) | 21,22(R) (LO2) | 23,24(S) (LO2) | 25,26(T) (LO2)

PSH-C72-2N003A

PSL-C72-2N005A

CIRCUIT 1			CIRCUIT 2		
COM	NO	NC	COM	NO	NC
PUR	RD	BL	BR	YEL	OR
21	22				

NOT USED

ZS-B21-2N006A (ZS-C72-2N006A) 30 A B 04

ZS-B21-2N006B (ZS-C72-2N006B) 30 C D 04

TURBINE: CONT. VLV FAST CLOSURE & STOP VLV TRIP BYPASS | CONTROL VALVE FAST CLOSURE | MAIN STOP VALVE CLOSURE

F/C UK

RPS TRIP CHANNEL A1
SCHEME Nº 2Q0404
REF SH.6 THRU 9
TYPICAL OF 4 SEE TABLE I

TABLE I

SCHEME Nº	FACILITY CODE	DESCRIPTION		PENETRATION	LIMIT SWITCH NO	LOC	NO	LOC	NO	LOC	NO	LOC	LEVEL AND PRESSURE SWITCH NOS: PSH-B21-2N023A	PSH-B21-2N020A	LIS-B21-2N024A	LOC	NO
2Q0404	UK	RPS TRIP CHANNEL	A1	2W106 A	≠5-6	HV-B21-2F022A	≠5-8	HV-B21-2F028A	≠5-8	HV-B21-2F022B	≠5-6	HV-B21-2F028B	C	C	C	TB2C005-A1	C
2Q0405	VK		A2	2W106 B	≠5-8	C	≠5-6	C	≠5-8	D	≠5-6	D	C	C	C	TB2C004-B2	C
2Q0406	XK		B1	2W106 C	≠5-8	A	≠5-6	A	≠5-6	C	≠5-8	C	B	B	B	TB2C004-B2	B
2Q0407	YK		B2	2W106 D	≠5-6	B	≠5-8	B	≠5-6	D	≠5-8	D	D	D	D	TB2C005-B1	D

LOC	NO	LOC		PRESSURE SWITCH NO	LOC	NO	LOC	TURB STOP VALVE NO	LOC	NO	LOC	CONTROL RM CAB NO	TERM CAB NO
TB2C057-A1	LSH-C12-2N013A	LOCAL		PSH-C72-2N003A	LOCAL	(PSL-C72-2N005A) 21 PUR COM 22 NO RD CKT.1	LOCAL	(ZS-C72-2N006B) 3 C D 4	ZS-2D141B3	(ZS-C72-2N006A) 3 A B 4	ZS-2D141A7	2C609	2TC614-E
TB2C058-A1		C			C	(PSL-C72-2N005C) 21 PUR COM 22 NO RD CKT.1		(ZS-C72-2N006D) 3 C D 4	D7	(ZS-C72-2N006C) 3 A B 4	C7	2C609	2TC614-D
TB2C057-A2		B			B	(PSL-C72-2N005B) 21 PUR COM 22 NO RD CKT.1		(ZS-C72-2N006C) 3 C D 4	C8	(ZS-C72-2N006A) 3 A B 4	A8	2C611	2TC624-E
TB2C058-A2		D			D	(PSL-C72-2N005D) 21 PUR COM 22 NO RD CKT.1		(ZS-C72-2N006D) 3 C D 4	D8	(ZS-C72-2N006B) 3 A B 4	B7	2C611	2TC624-D

VALVE CONTROL

SV-C12-2F009A SCRAM DISCH VOL VENT & DRAIN PILOT VALVE COIL "A"	SV-C12-2F009A SCRAM DISCH VOLVENT & DRAIN PILOT VALVE COIL "B"	SV-C12-2F110A BACKUP SCRAM VALVE "A"	SV-C12-2F110B BACKUP SCRAM VALVE "B"	SV-C12-2F009B SCRAM DISCH VOL VENT & DRAIN PILOT VALVE COIL 'A'	SV-C12-2F009B SCRAM DISCH VOL VENT & DRAIN PILOT VALVE COIL 'B'
7,8(F) (LO2)	9,10(G) (LO2)	11,12(H) (LO2)	13,14(J) (LO2)	7,8 (K) (LO2)	9,10(L) (LO2)
2TC614-A PGCC TERM CAB TO 2C609 F/C UK	2TC624-B PGCC TERM CAB TO 2C611 F/C VK	2TC614-E PGCC TERM CAB TO 2C609 F/C EK	2TC624-B PGCC TERM CAB TO 2C611 F/C FK	2TC614-A PGCC TERM CAB TO 2C609 F/C-UK	2TC624-B PGCC TERM CAB TO 2C611 F/C-VK

VALVE POSITION INDICATION LIGHTS

XV-C12-2F010A SCRAM DISCH VOL VENT VALVE ZS 4710-3&7 — 28 FIELD JUMPER — XV-C12-2F010B — XV-C12-2F011A SCRAM DISCH VOL DRAIN VALVE ZS 4710-3&7 — 29 FIELD JUMPER — XV-C12-2F011B — 2C646 — 2C647

3,4,SP(D) (LO3) | 3,23,24(M) (LO3) | 3,15,SP(E) (LO3) | 3,26,27(N) (LO3) | 3,16,26,59, 60,SP,SP G.E CABLE 6842/C72-001 | 3,4,23,33, 34,SP,SP G.E CABLE 6942/C72-001

2C651-06C UNIT OPERATING BENCHBOARD

F/C-NK

2C646 RPS AUX DIV 1 & 2 LOGIC V8

1,2(A) (LO4)

C12-2N016A LEVEL TRANSMITTER

F/C-UM
SCHEME Nº 2Q0661
SCRAM DISCHARGE VOL. HIGH WATER LEVEL
REF. SH. 18
TYPICAL OF 4 SEE TABLE II

TABLE II

SCHEME Nº	FACILITY CODE	DESCRIPTION	CABLE DESTINATION FROM	TO
2Q0661	UM	SDV HI WTR LVL TRIP UNIT A1	2C646	C12N016A
2Q0662	VM	SDV HI WTR LVL TRIP UNIT A2	2C646	C12N016C
2Q0663	XM	SDV HI WTR LVL TRIP UNIT B1	2C647	C12N016B
2Q0664	YM	SDV HI WTR LVL TRIP UNIT B2	2C647	C12N016D

RPS VALVES
SCHEME Nº 2Q0401
REF. SH. 5&12

REFERENCE DWG'S.	
BECHTEL NO.	PL. NO.
E-42	A-107191
E-170-04	D-107319 SH5
8856-MI-C72-5	FF122610

NOTES
1. FOR STANDARD SYMBOLS FOR ELECTRICAL DRAWINGS SEE 8856-E-42.
2. DESIGN BASED ON GE/APED ELEMENTARY 791E414AE (V/P 8856-MI-C72-5).
3.
4. FOR SCHEME #2Q0404 (& 2Q0405) FIELD TO DISCONNECT INTERNAL WIRING FROM ZS-8 TERMINAL #17, AND CONNECT WIRE #3 & 7 TO TERMINAL #17 OF 2F028A(C) & 2F028B(D) RESPECTIVELY (AS STATION)
5. FOR SCHEME #2Q0406 (& 2Q0407) FIELD TO DISCONNECT INTERNAL WIRING FROM ZS-8 TERMINAL #15, AND CONNECT WIRE #3 & 7 TO TERMINAL #15 OF 2F028A(B) & 2F028C(D) RESPECTIVELY (AS STATION)

NO.	DATE	REVISIONS	BY	CK'K	DESIGN SUPV	ENGR	PROJ ENGR	APP'D
A	11/14/83	REV TO INCORP FCR E-7878	JC	WHK				
A	10/18/82	REVISED PER FCN E-9057.	RBL	EBL				
A	9/14/82	REV PER DCP 677 & REV. 1	JC	SM				
A	1/3/78	REV. TO 2N/OR & FCR E-7357, FOR E-11194 & FCN-E-3362.	JC	DC				
A	7/19/77	ISSUED FOR CONSTRUCTION.	C.H.	SS C.H.				

SCALE NONE | DESIGNED CHENG HOU | DRAWN | CHECK | CHIEF ENGR

PENNSYLVANIA POWER & LIGHT COMPANY
ALLENTOWN, PENNSYLVANIA
SUSQUEHANNA STEAM ELECTRIC STATION – UNIT 1, UNIT 2

BECHTEL – SAN FRANCISCO

BLOCK DIAGRAM
REACTOR PROTECTION SYSTEM
TRIP CKTS & RPS VALVES UNIT 2

JOB No.	DRAWING No.	REV.
8856	E-157 SH 5	8

D-107306 SH 5

PRC APERTURE CARD

UNCONTROLLED DOCUMENT FOR REFERENCE ONLY
Docket # 50-387
Control # 8803220117-23
Date 3/10/88 of Document:
REGULATORY DOCKET FILE

G 2 T 50 | BLK DIAG RPS TRIP & VLVES | M

24X

I certify that the microfilmed image contained on this microform were made in the normal and regular course of business. This is a true, full, correct and complete reproduction and replacement for and/or in lieu of original documents generated by the Bechtel group of companies.
Signed P.C. Akin Date 1-18-83 Camera Type MRG 1
Camera Operator

This drawing and the design it covers are the property of BECHTEL. They are merely loaned and on the borrower's express agreement that they will not be reproduced, copied, loaned, exhibited, nor used except in the limited way and private use permitted by any written consent given by the lender to the borrower.

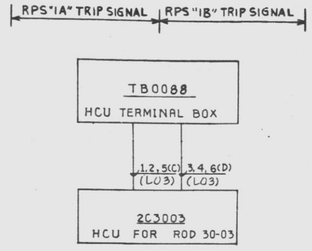

F/C UK

RPS TRIP SIGNAL TO SIGI-1 HCU

SCHEME 2Q0420
REF SH 12
(TYPICAL FOR 24 -SEE TABLE C)

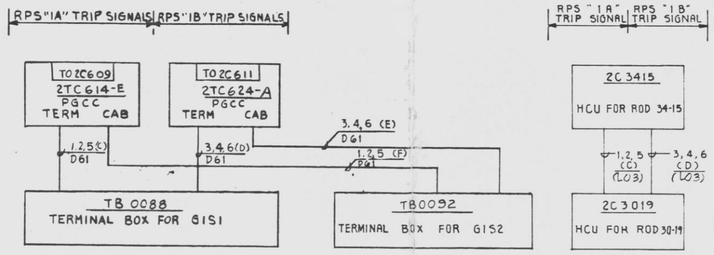

F/C UK

RPS TRIP SIGNALS TO GROUP I HCU TERMINAL BOXES

SCHEME 2Q0410
REF SH 12
(TYPICAL OF 4-SEE TABLE A)

F/C UK

RPS TRIP SIGNAL TO HCU'S

SCHEME 2Q0421
REF SH. 12
(TYPICAL FOR 161 SEE TABLE B)

TABLE A

SCHEME NO	FACILITY CODE	DESCRIPTION	CONTROL CABINET SIGNAL	PGCC	CABINET	HCU TERM BOXES SIDE 1	SIDE 2
2Q0410	UK	GROUP 1 RPS TRIP SYSTEM	1A	2TC614-E	2C609	TB0088	TB0092
			1B	2TC624-F	2C611		
411	VK	2	2A	2TC614-A	2C609	TB0089	TB0093
			2B	2TC624-E	2C611		
412	XK	3	3A	2TC614-D	2C609	TB0090	TB0094
			3B	2TC624-D	2C611		
413	YK	4	4A	2TC614-B	2C609	TB0091	TB0095
			4B	2TC624-B	2C611		

△3

TABLE B

SCHEME NO	FACILITY CODE	FROM HCU	TO HCU	ROD NO
2Q0421	UK	2C3415	2C3019	30-19
422		C3823	3035	30-35
423		C3447	3051	30-51
424		C3807	3415	34-15
425		C3035	3431	34-31
426		C3839	3447	34-47
428		C3019	3823	38-23
429		C3431	3839	38-39
430		C4643	3855	38-55
431		C5415	4203	42-03
433		C4627	4235	42-35
434		C5447	4251	42-51
435		C3003	4611	46-11
436		C5023	4627	46-27
437		C4235	4643	46-43
438		C4219	5023	50-23
439		C5843	5039	50-39
440		C4611	5415	54-15
441		C5039	5431	54-31
442		C5431	5447	54-47
443		C4203	5827	58-27
444		C5827	5843	58-43

GROUP 1 SIDE 1

SCHEME NO	FACILITY CODE	FROM HCU	TO HCU	ROD NO
2Q0445	UK	2C2659	2C0639	06-39
446		0639	1035	10-35
447		1035	0231	02-31
448		1823	1019	10-19
449		0231	0623	06-23
451		1019	1411	14-11
452		2231	1427	14-27
453		1855	1443	14-43
454		1411	1807	18-07
455		1427	1823	18-23
456		1443	1839	18-39
457		2247	1855	18-55
458		2627	2215	22-15
459		1839	2231	22-31
461		2215	2611	26-11
462		2643	2627	26-27
464		1051	2659	26-59

GROUP 1 SIDE 2

SCHEME NO	FACILITY CODE	FROM HCU	TO HCU	ROD NO
2Q0465	VK	2C5419	2C3403	34-03
466		3435	3419	34-19
467		4239	3435	34-35
469		3419	3811	38-11
470		4631	3827	38-27
473		4615	4207	42-07
474		3827	4223	42-23
475		3843	4239	42-39
476		3451	4255	42-55
477		5027	4615	46-15
478		4647	4631	46-31
479		4255	4647	46-47
480		3403	5011	50-11
481		4223	5027	50-27
482		3859	5043	50-43
483		5831	5419	54-19
484		5043	5435	54-35
485		5435	5831	58-31

GROUP 2 SIDE 1

SCHEME NO	FACILITY CODE	FROM HCU	TO HCU	ROD NO
2Q0486	VK	2C1859	2C0643	06-43
487		1039	0235	02-35
488		1023	0627	06-27
489		1447	1859	18-59
490		1827	1023	10-23
491		0643	1039	10-39
492		0627	1415	14-15
493		0235	1431	14-31
495		1415	1811	18-11
496		2631	1827	18-27
498		1431	0219	02-19
499		0219	2203	22-03
500		3023	2219	22-19
501		1843	2235	22-35
502		3055	2251	22-51
503		2219	2615	26-15
504		2235	2631	26-31
505		2251	2647	26-47
506		2615	3007	30-07
507		3039	3023	30-23
508		2647	3039	30-39

GROUP 2 SIDE 2

SCHEME NO	FACILITY CODE	FROM HCU	TO HCU	ROD NO
2Q0510	XK	2C4227	2C3011	30-11
511		3439	3027	30-27
512		3847	3043	30-43
514		3011	3407	34-07
515		3027	3423	34-23
516		3831	3439	34-39
518		3423	3815	38-15
519		3043	3831	38-31
520		3455	3847	38-47
521		4619	4211	42-11
522		3815	4227	42-27
523		4651	4243	42-43
524		3059	4259	42-59
525		5015	4619	46-19
526		4259	4635	46-35
528		5423	5015	50-15
529		4635	5031	50-31
530		4243	5047	50-47
531		5047	5423	54-23
532		5031	5439	54-39
533		5835	5819	58-19
534		5439	5835	58-35

GROUP 3 SIDE 1

SCHEME NO	FACILITY CODE	FROM HCU	TO HCU	ROD NO
2Q0535	XK	2C0615	2C0223	02-23
536		0631	1831	18-31
537		2603	0615	06-15
538		1831	0239	02-39
539		0239	0647	06-47
540		2207	1011	10-11
541		1815	1027	10-27
542		1847	1043	10-43
543		2619	1419	14-19
544		2223	1435	14-35
545		1043	1451	14-51
546		1011	1815	18-15
547		0223	0631	06-31
548		1435	1847	18-47
550		1027	2223	22-23
551		2635	2239	22-39
552		1451	2255	22-55
555		1419	2635	26-35
556		2239	2651	26-51

GROUP 3 SIDE 2

SCHEME NO	FACILITY CODE	FROM HCU	TO HCU	ROD NO
2Q0557	YK	2C4623	2C3411	34-11
558		3443	3427	34-27
560		4655	3459	34-59
561		5823	3803	38-03
562		5839	3819	38-19
563		4639	3835	38-35
565		3427	4215	42-15
566		3835	4231	42-31
567		3851	4247	42-47
568		5019	4607	46-07
569		4215	4623	46-23
570		4247	4639	46-39
572		3819	5019	50-19
573		5443	5035	50-35
574		3459	5051	50-51
575		5035	5427	54-27
576		5051	5443	54-43
577		5427	5823	58-23
578		4231	5839	58-39

GROUP 4 SIDE 1

SCHEME NO	FACILITY CODE	FROM HCU	TO HCU	ROD NO
2Q0579	YK	2C0635	2C0227	02-27
580		2259	0243	02-43
581		1803	0619	06-19
582		0243	0635	06-35
583		0619	1015	10-15
584		0227	1031	10-31
585		1455	1047	10-47
586		1015	1407	14-07
587		1835	1423	14-23
588		1851	1439	14-39
590		1031	1803	18-03
591		2227	1819	18-19
592		1439	1835	18-35
594		1819	2211	22-11
595		2623	2227	22-27
596		2639	2243	22-43
597		1047	2259	22-59
598		2211	2601	26-07
599		3031	2623	26-23
650		2655	2639	26-39
651		3047	2655	26-55
652		2607	3015	30-15
653		2243	3031	30-31

GROUP 4 SIDE 2

TABLE C

SCHEME NO.	FACILITY CODE	TERMINAL BOX	HCU	ROD NO.	SIDE & GROUP
2Q0420	UK	TB0088	2C3003	30-03	S1-01-1
2Q0432	UK	TB0088	2C4219	42-19	S1-01-2
2Q0427	UK	TB0088	2C3807	38-07	S1-01-3
2Q0472	VK	TB0089	2C3859	38-59	S1-02-1
2Q0468	VK	TB0089	2C3451	34-51	S1-02-2
2Q0471	VK	TB0089	2C3843	38-43	S1-02-3
2Q0513	XK	TB0090	2C3059	30-59	S1-03-1
2Q0527	XK	TB0090	2C4651	46-51	S1-03-2
2Q0517	XK	TB0090	2C3455	34-55	S1-03-3
2Q0571	YK	TB0091	2C4655	46-55	S1-04-1
2Q0564	YK	TB0091	2C3851	38-51	S1-04-2
2Q0559	YK	TB0091	2C3443	34-43	S1-04-3

SCHEME NO	FACILITY CODE	TERMINAL BOX	HCU	ROD NO.	SIDE & GROUP
2Q0450	UK	TB0092	2C1051	10-51	S2-01-1
2Q0460	UK	TB0092	2C2247	22-47	S2-01-2
2Q0463	UK	TB0092	2C2643	26-43	S2-01-3
2Q0494	VK	TB0093	2C1447	14-47	S2-02-1
2Q0497	VK	TB0093	2C1843	18-43	S2-02-2
2Q0509	VK	TB0093	2C3055	30-55	S2-02-3
2Q0553	XK	TB0094	2C2603	26-03	S2-03-1
2Q0549	XK	TB0094	2C2207	22-07	S2-03-2
2Q0554	XK	TB0094	2C2619	26-19	S2-03-3
2Q0589	YK	TB0095	2C1455	14-55	S2-04-1
2Q0593	YK	TB0095	2C1851	18-51	S2-04-2
2Q0654	YK	TB0095	2C3047	30-47	S2-04-3

NOTES

1. FOR STANDARD SYMBOLS FOR ELECTRICAL DRAWINGS SEE 8856-E-42
2. FOR TERMINAL BOX SCHEDULE SEE 8856-E-48
3. RPS CABLES ARE ROUTED IN THE RPS RACEWAYS ONLY. SEPARATION IS REQUIRED BETWEEN THE FOUR GROUPS. TRIP SIGNALS ROUTED TO THE SAME GROUP MAY BE PLACED IN THE SAME RACEWAY:
   GROUP 1 – RPS TRIP SIGNALS "1A" AND "1B"
   GROUP 2 – RPS TRIP SIGNALS "2A" AND "2B"
   GROUP 3 – RPS TRIP SIGNALS "3A" AND "3B"
   GROUP 4 – RPS TRIP SIGNALS "4A" AND "4B"
4. DESIGN BASED ON GE/APED ELEMENTRY 791E414AE (V/P 8856-MI-C72-5)

REFERENCE DWG'S.

BECHTEL NO.	PL. NO.
E-42	A-107191
E-48	A-107197
8856-MI-C72-5	FF122610

No.	DATE	REVISIONS	BY	CHK'R	DESIGN SUPV.	ENG'R	PROJ ENG'R	APP'D
△4	4/1/77	REVISED LOCATION NOS FOR SE ELEM. CRDR #9	SS	JB				
△3	3/24/77	RBV CABLE CODE PER FCR2360	TB	CW	AA	JK		
△2	1/31/77	REVISED PER V/P REVISION	DS	C.H.	JB			
△1	1/17/77	ISSUED FOR CONSTRUCTION.	C.H.	SSC C.H.	W			

SCALE NONE | DESIGNED CHENG HOU | DRAWN JOB | CHIEF ENGR

PENNSYLVANIA POWER & LIGHT COMPANY
ALLENTOWN, PENNSYLVANIA
SUSQUEHANNA STEAM ELECTRIC STATION - UNIT 1, UNIT 2

BECHTEL – SAN FRANCISCO

BLOCK DIAGRAM REACTOR PROTECTION SYSTEM TRIP SIGNALS TO HCU'S UNIT 2

JOB No.	DRAWING No.	REV.
8856	E-157 SH. 6	3

D-107306 SH 6

22 x 34 "D" SIZE

PRC APERTURE CARD
Docket #50-387
Control #8306220117-24
Date 3/10/83 of Document:
REGULATORY DOCKET FILE
UNCONTROLLED DOCUMENT FOR REFERENCE ONLY
02-150 BLK DIAG RPS TRIP SIGNALS W

24X

I certify that the microfilmed image contained on this microform was made in the normal and regular course of business. This is a true, full, correct and complete reproduction and replacement for and/or in lieu of original documents generated by the Bechtel group of companies.
Signed MIANTO Date 12-4-80 Camera Type MRG 1
Camera Operator

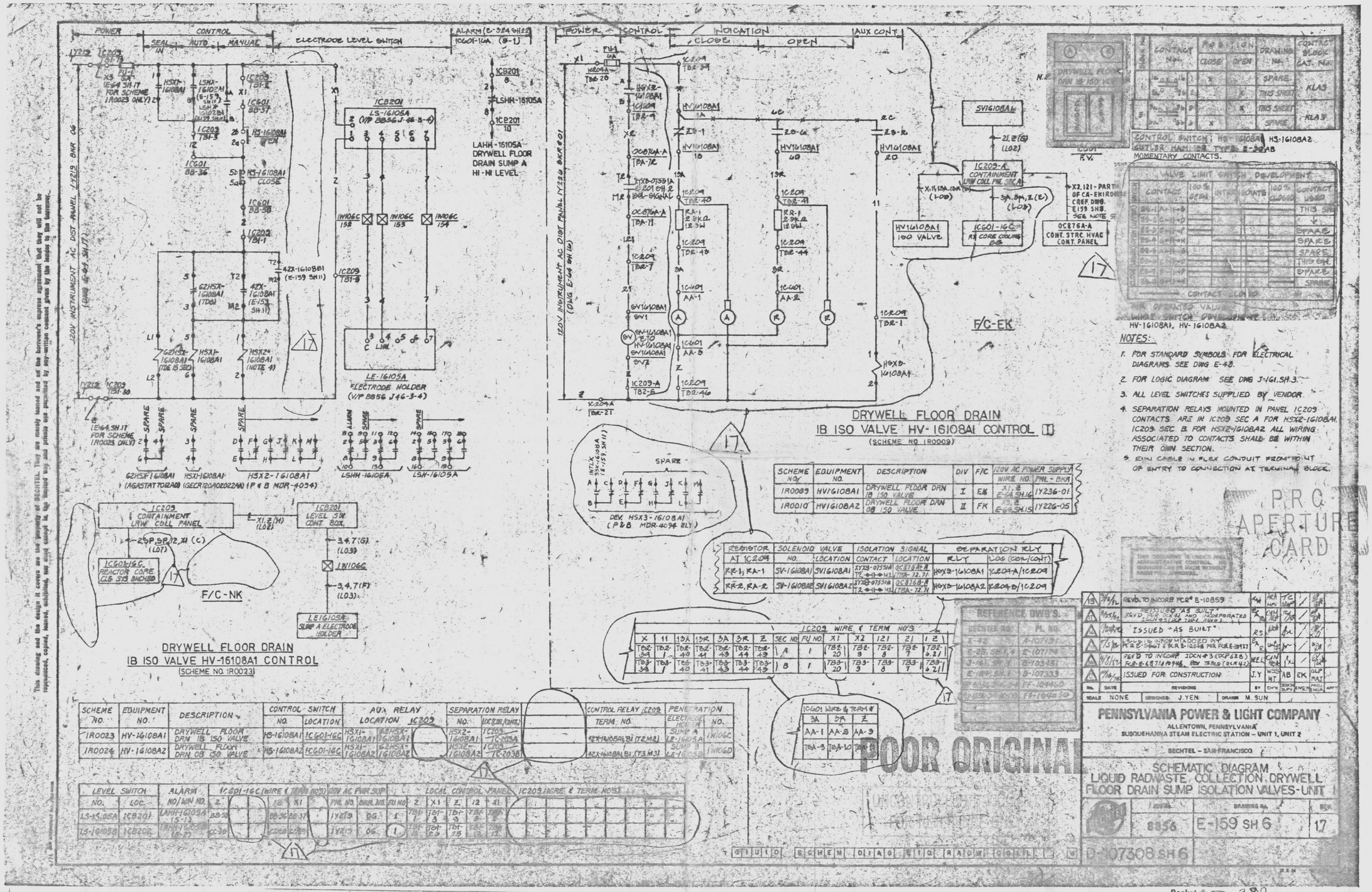

This drawing and the design it covers are the property of BECHTEL. They are merely loaned and at the borrower's express agreement that they will not be reproduced, copied, loaned, exhibited, nor used except as the limited way and private use permitted by any written consent given by the lender to the borrower.

24X

I certify that the microfilmed image contained on this microform were made in the normal and regular course of business. This is a true, full, correct and complete reproduction and replacement for and/or in lieu of original documents generated by the Bechtel group of companies.
Signed NINOUS Date 9-9-82 Camera Type MRG-1
Camera Operator

Docket # 50-387
Control # 8309220117-25
Date 3/10/83 of Document:
REGULATORY DOCKET FILE

D

This drawing and the de-ign it covers are the property of BECHTEL. They are mom-by are mostly loaned and on the borrower's express agreement that they will not be reproduced, copied, loaned, exhibited, nor used except in the limited way and private use permitted by any written consent given by the lender to the borrower.

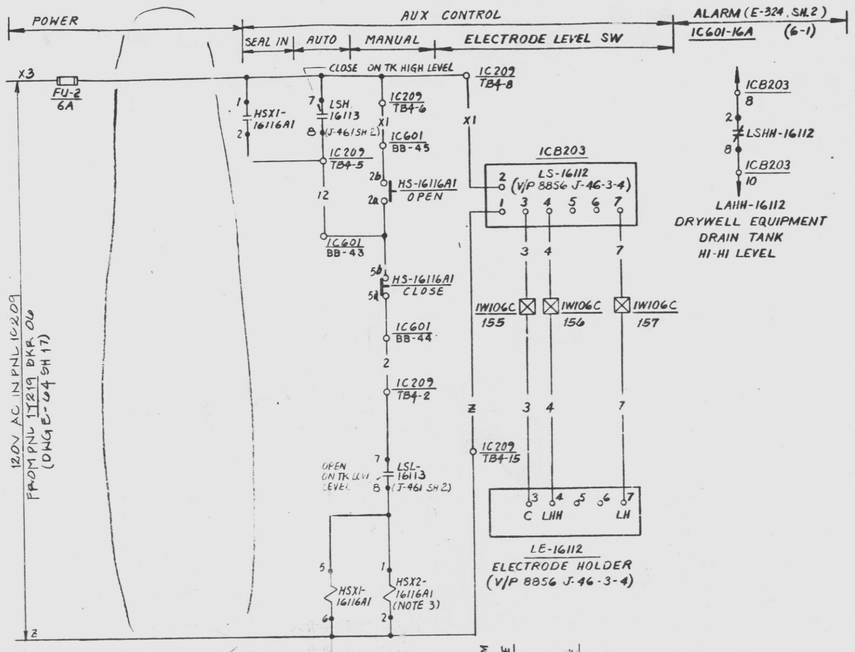

LRW COLL DRYWELL EQUIP DRAIN TANK 1T-218
ISO VALVE HV-16116A1 CONTROL
SCHEME NO 1R0025

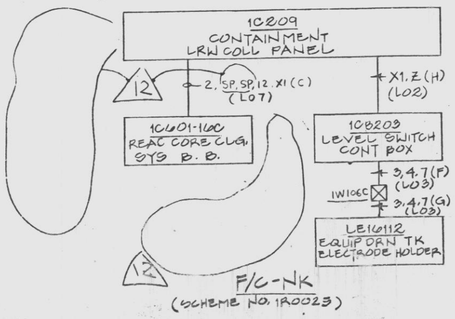

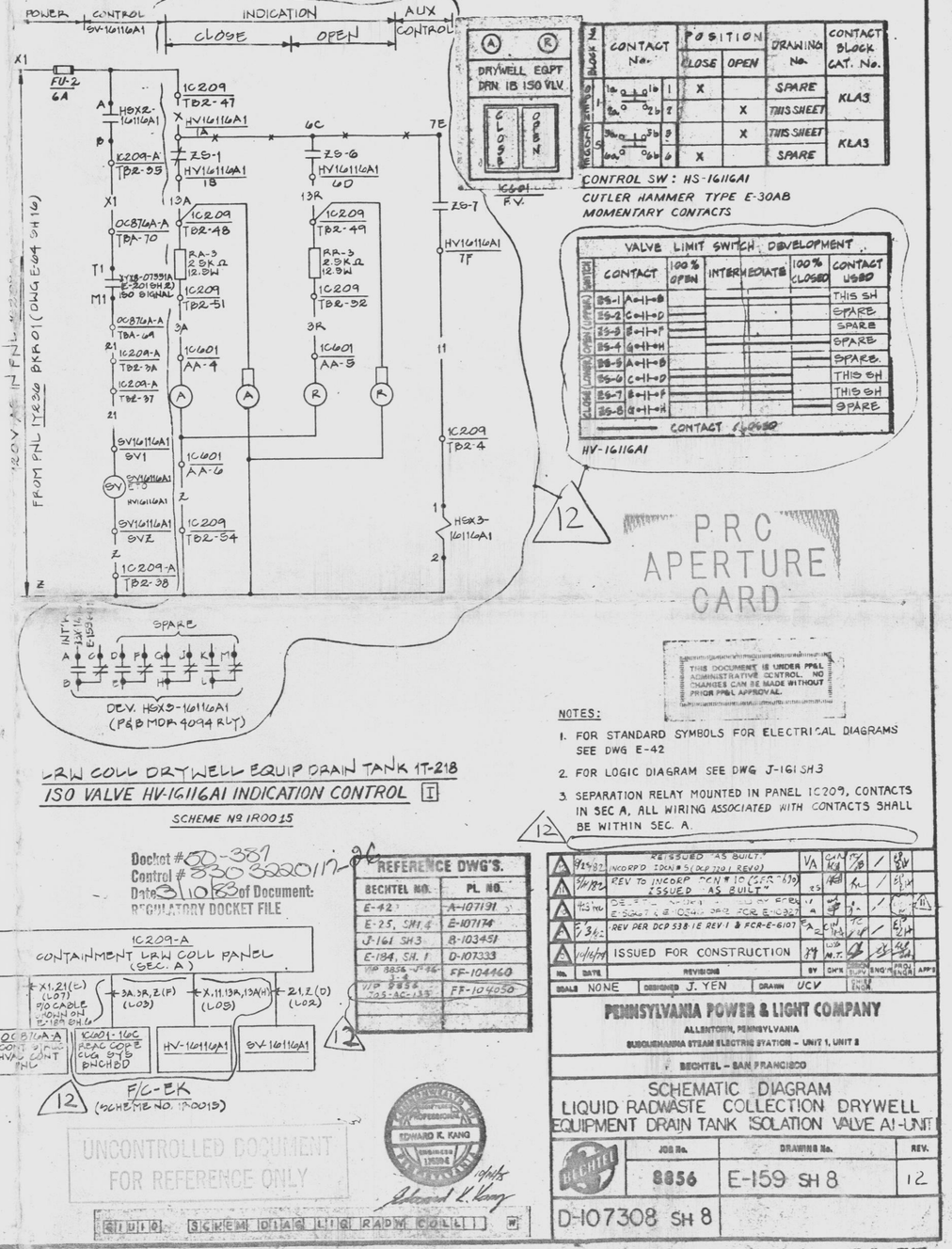

CONTACT BLOCK No.	CONTACT No.	POSITION CLOSE	POSITION OPEN	DRAWING No.	CONTACT BLOCK CAT. No.
H	1	X		SPARE	KLA3
	2		X	THIS SHEET	
S	3		X	THIS SHEET	KLA3
	4	X		SPARE	

PRC APERTURE CARD

THIS DOCUMENT IS UNDER PP&L ADMINISTRATIVE CONTROL. NO CHANGES CAN BE MADE WITHOUT PRIOR PP&L APPROVAL.

NOTES:
1. FOR STANDARD SYMBOLS FOR ELECTRICAL DIAGRAMS SEE DWG E-42
2. FOR LOGIC DIAGRAM SEE DWG J-161 SH 3
3. SEPARATION RELAY MOUNTED IN PANEL 1C209, CONTACTS IN SEC A, ALL WIRING ASSOCIATED WITH CONTACTS SHALL BE WITHIN SEC. A.

LRW COLL DRYWELL EQUIP DRAIN TANK 1T-218
ISO VALVE HV-16116A1 INDICATION CONTROL [I]
SCHEME NO 1R0015

Docket # 50-387
Control # 8305220117-86
Date 3/10/83 of Document:
REGULATORY DOCKET FILE

REFERENCE DWG'S.	
BECHTEL NO.	PL. NO.
E-42	A-107191
E-25, SH 1 & 4	E-107174
J-161 SH 3	B-103451
E-184, SH. 1	D-107333
V/P 8856 J-46	FF-104460
V/P 8856 205-AC-133	FF-104050

UNCONTROLLED DOCUMENT FOR REFERENCE ONLY

EDWARD K. KANG PROFESSIONAL ENGINEER 13084 COMMONWEALTH OF PENNSYLVANIA 5/4/83

NO.	DATE	REVISIONS	BY	CH'K	SUPV ENG'R	PROJ ENGR	APP'D
12	9/24/82	REISSUED "AS BUILT" INCORPD IDCN # 5 (DCP 7701 REV 0)	V/A	C.M. 10/4	TK/B	/	EB/JH
11	5/18/82	REV TO INCORP DCN # 10 (FCR 6179) ISSUED "AS BUILT"	25	10/4		/	EB/JH
10	4/5/82	DELETED SOME OF THE VALVES PER DCP 5381E REV 1 & FCR-E-6107	A	C.M. 10/4	TK/B	/	EB/JH
1	3/1/82	REV PER DCP 5381E REV 1 & FCR-E-6107	A	C.M. 10/4	TK/B	/	EB/JH
0	11/16/79	ISSUED FOR CONSTRUCTION	39	LOG M.T.			

SCALE NONE DESIGNED J. YEN DRAWN UCV CHK'D

PENNSYLVANIA POWER & LIGHT COMPANY
ALLENTOWN, PENNSYLVANIA
SUSQUEHANNA STEAM ELECTRIC STATION - UNIT 1, UNIT 2
BECHTEL - SAN FRANCISCO

SCHEMATIC DIAGRAM
LIQUID RADWASTE COLLECTION DRYWELL EQUIPMENT DRAIN TANK ISOLATION VALVE A1-UNIT

JOB No.	DRAWING No.	REV.
8856	E-159 SH 8	12
D-107308 SH 8		

24X
NINOUS
MRG-1
D

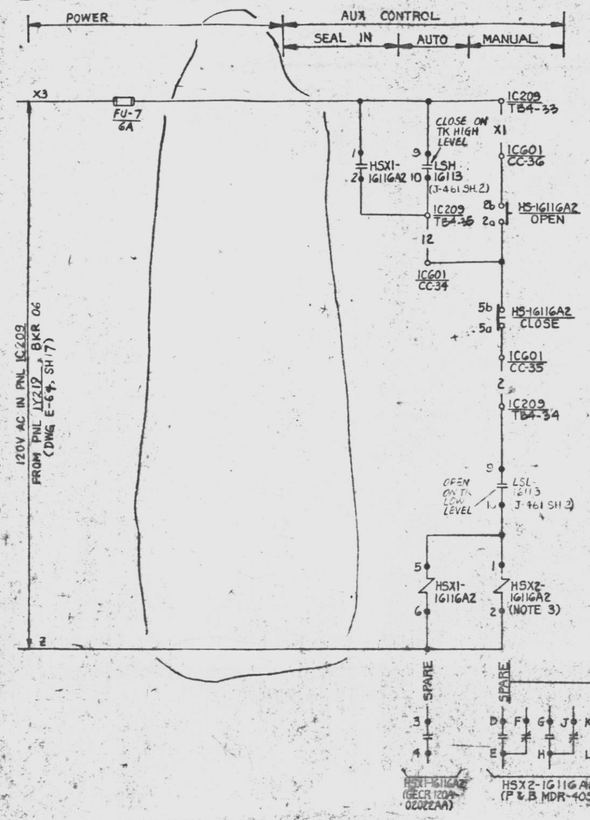

DRYWELL EQUIP DRAIN TANK IT-218
ISO VALVE HV-16116A2
SCHEME NO. IR0026

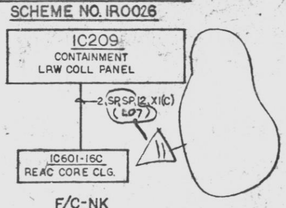

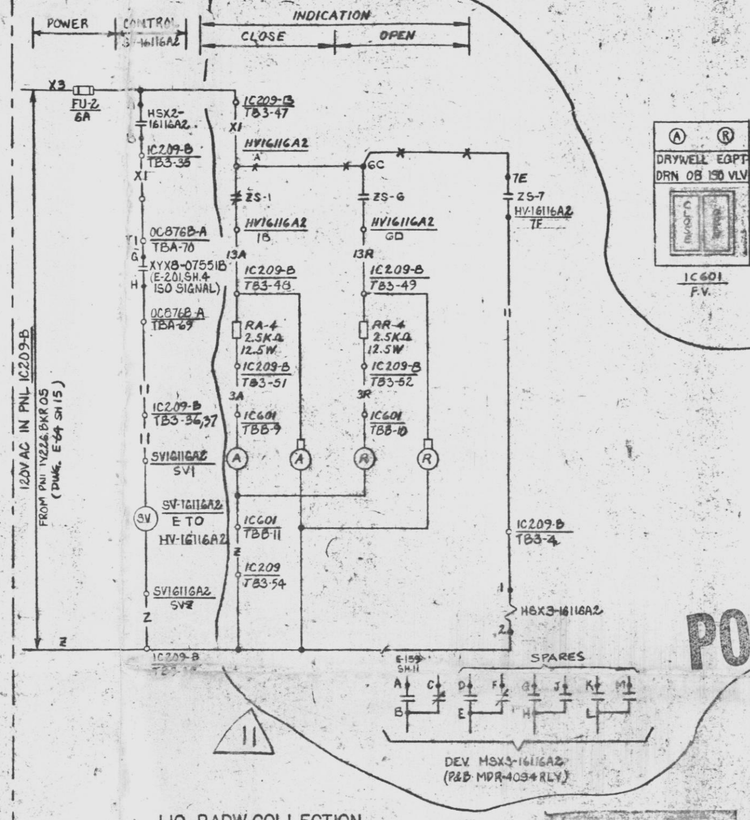

LIQ. RADW COLLECTION
DRYWELL EQUIP DRAIN TANK IT-218
ISO VALVE HV16116A2 CONTROL [11]
SCHEME NO. IR0016

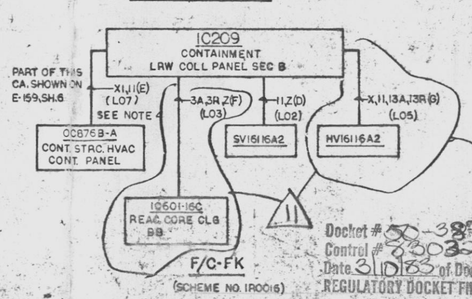

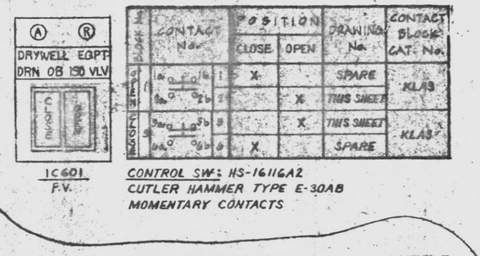

CONTROL SW: HS-1611GA2
CUTLER HAMMER TYPE E-30AB
MOMENTARY CONTACTS

CONTACT No.	POSITION CLOSE	POSITION OPEN	TRAINING No.	CONTACT BLOCK CAT. No.
1a 1b	X		SPARE	KLA3
2a 2b		X	THIS SHEET	
3a 3b		X	THIS SHEET	KLA3
4a 4b	X		SPARE	

VALVE LIMIT SWITCH COMPLEMENT

CONTACT	100% OPEN	INTERMEDIATE	100% CLOSED	CONTACT USED
ZS-1	A-H			THIS SH
ZS-2	C-H			SPARE
ZS-3	E-H			SPARE
ZS-4	G-H			SPARE
ZS-5	A-H			SPARE
ZS-6	C-H			THIS SH
ZS-7	E-H			THIS SH
ZS-8	G-H			SPARE

CONTACT CLOSED

HV-16116A2

NOTES:
1. FOR STANDARD SYMBOLS FOR ELECTRICAL DIAGRAMS SEE DWG E-42
2. FOR LOGIC DIAGRAM SEE DWG J-161 SH 3
3. SEPARATION RELAY MOUNTED IN PANEL IC209 CONTACTS ARE IN SEC B. ALL WIRING ASSOCIATED WITH CONTACTS SHALL BE WITHIN SEC B.
4. RUN CABLE IN FLEX CONDUIT FROM POINT OF ENTRY TO CONNECTION AT TERMINAL BLOCK.

MARK	DATE	REVISIONS	BY	CHK'D	APP'D
A	10/14/81	REVD TO DELETE DRAWING REVNT (SPR 2690)	GN	MRG	TG
A	9/24/81	REISSUED "AS BUILT" REVD PER FCR 720, 980, REVD PER FCR	GN	MRG	TG
A	4/17/81	ISSUED "AS BUILT"	RS	MA	MA
A	12/14/80	DELETE THE WORK ADDED BY FCR'S E-0067 & E-10547 PER FCR E-10927	VA	MA	MA
A	12/14/79	ISSUED FOR CONSTRUCTION	MA	MA	MA

SCALE NONE | DESIGNED J. YEN | DRAWN UCV

PENNSYLVANIA POWER & LIGHT COMPANY
ALLENTOWN, PENNSYLVANIA
SUSQUEHANNA STEAM ELECTRIC STATION - UNIT 1, UNIT 2
BECHTEL - SAN FRANCISCO

SCHEMATIC DIAGRAM
LIQUID RADWASTE COLLECTION DRYWELL EQUIPMENT DRAIN TANK ISOLATION VALVE A2-UNIT 1

JOB NO.	DRAWING NO.	REV.
3856	E-159 SH 9	11
	D-107308 SH 9	

THIS DOCUMENT IS UNDER PSL ADMINISTRATIVE CONTROL. NO CHANGES CAN BE MADE WITHOUT PSL4 APPROVAL.

REFERENCE DRAWINGS

BECHTEL NO.	PP&L NO.
E-42	A-101-1
E-25, SH 1-4	E-101-1
J-161 SH 3	B-101-1
E-194, SH 1	D-107333
M7-0053-1-46	E-101-2
E-159, SH 6	E-101-2
E-159, SH 7	E-101-2
E-159, SH 8	E-101-2

POOR ORIGINAL
PROJECT APERTURE CARD

Docket # 50-387
Control # 8303220117-27
Date 3/10/83 of Document
REGULATORY DOCKET FILE

24X

I certify that the microfilmed image contained on this microform were made in the normal and regular course of business. This is a true, full, correct and complete reproduction and replacement for and/or in lieu of original documents generated by the Bechtel group of companies.
Signed NINOUS Date 9-01-82 Camera Type MRG-1
Camera Operator

This drawing and the design it covers are the property of BECHTEL. They are merely loaned and on the borrower's express agreement that they will not be reproduced, copied, loaned, exhibited, nor used except in the limited way and private use permitted by any written consent given by the lender to the borrower.

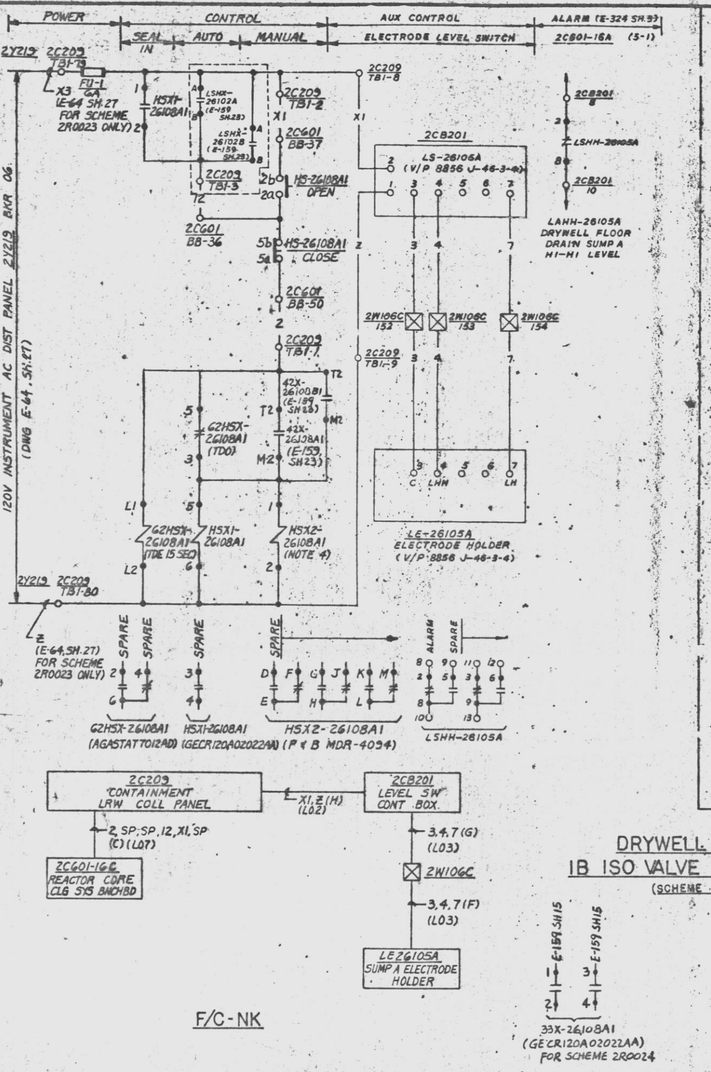

F/C-NK

DRYWELL FLOOR DRAIN
1B ISO VALVE HV-26108A1 CONTROL

(SCHEME NO 2R0023)

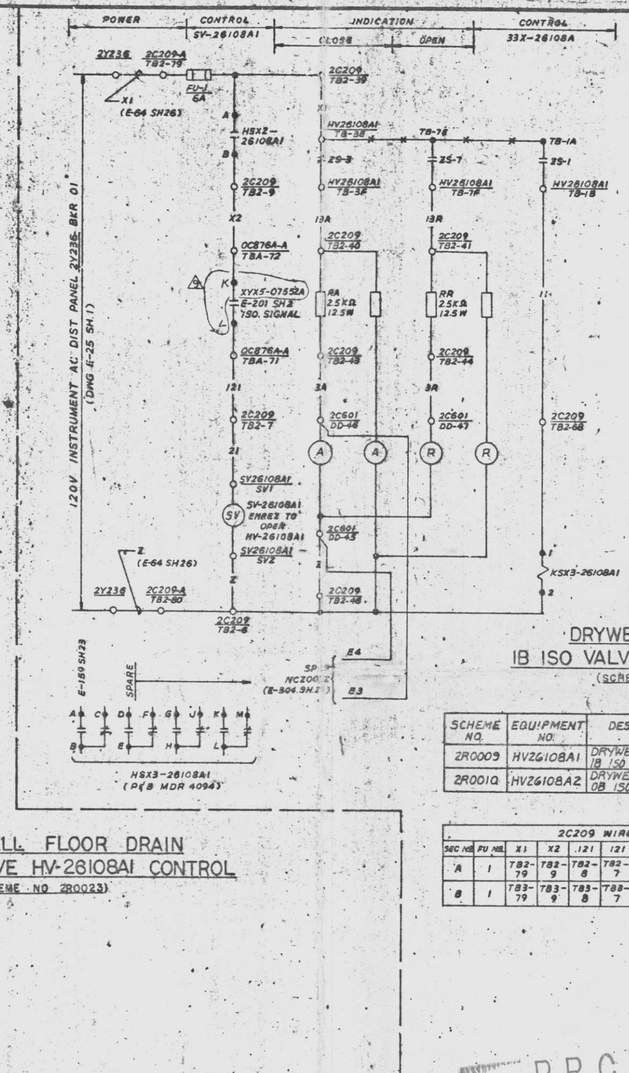

DRYWELL FLOOR DRAIN
1B ISO VALVE HV-26108A1 CONTROL

(SCHEME NO 2R0009)

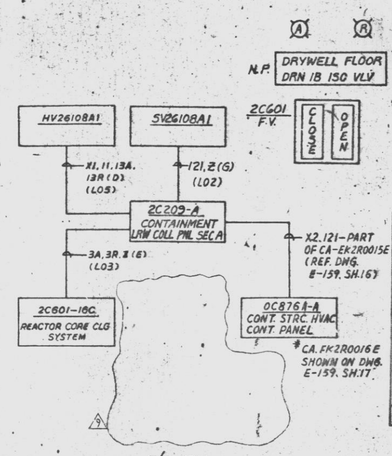

BLOCK No.	CONTACT No.		POSITION CLOSE	POSITION OPEN	DRAWING No.	CONTACT BLOCK CAT. No.
1	1a 1b	1	X		SPARE	KLA3
	2a 2b	2		X	THIS SHEET	
5	5a 5b	5		X	THIS SHEET	KLA3
	6a 6b	6	X		SPARE	

CONTROL SWITCH: HS-26108A1, HS-26108A2
GUTLER HAMMER TYPE E-30AB
MOMENTARY CONTACTS.

VALVE LIMIT SWITCH DEVELOPMENT

SWITCH	CONTACT	100% OPEN	INTERMEDIATE	100% CLOSED	CONTACT USED
CLOSE (LOWER) OPEN (UPPER)	25-1 A–B				THIS SH.
	25-2 C–D				SPARE
	25-3 E–F				THIS SH.
	25-4 G–H				SPARE
	25-5 K–B				SPARE
	25-6 C–D				SPARE
	25-7 E–F				THIS SH.
	25-8 G–H				SPARE

CONTACT CLOSED

AIR OPERATED VALVE LIMIT SWITCH DEVELOPMENT
HV-26108A1, HV-26108A2

NOTES:

1. FOR STANDARD SYMBOLS FOR ELECTRICAL DIAGRAMS SEE DWG E-42.
2. FOR LOGIC DIAGRAM SEE DWG 3-161, SH.3.
3. ALL LEVEL SWITCHES SUPPLIED BY VENDOR.
4. SEPARATION RELAYS MOUNTED IN PANEL 2C209 CONTACTS ARE IN 2C209 SEC A FOR HSX2-26108A1, 2C209 SEC B FOR HSX2-26108A2 ALL WIRING ASSOCIATED TO CONTACTS SHALL BE WITHIN THEIR OWN SECTION.

SCHEME NO.	EQUIPMENT NO.	DESCRIPTION	DIV	F/C	120V AC POWER SUPPLY WIRE NO.	PNL - BKR	SOLENOID VALVE NO.	LOCATION	ISOLATION SIGNAL CONTACT	LOCATION	AUX RELAY LOCATION 2C209
2R0009	HV2G108A1	DRYWELL FLOOR DRN 1B ISO VALVE	I	EK	XI, 2; E-64 SH.26	2Y236-01	SV-26108A1	SV26108A1	XY5-07552A X–9–L	OC876A-A TB6–72, 71	HSX3–26108A1
2R0010	HV2G108A2	DRYWELL FLOOR DRN 0B ISO VALVE	II	FK	X3, 2; E-64 SH.25	2Y226-05	SV-26108A2	SV26108A2	XY5-07552B X–9–L	OC876B-A TB6–72, 71	HSX3–26108A2

SEC NO	FU NO	2C209 WIRE & TERM NOS X1	X2	121	12I	Z	XI	II	13A*	13R	3A	3R	Z	2C601-16C WIRE & TERM NOS 3A	3R	Z	SPDS PT	WIRE NO	REF. NO.
A	1	TB2-79	TB2-9	TB2-8	TB2-7	TB2-6.80	TB2-39	TB2-68	TB2-40	TB2-41	TB2-43	TB2-44	TB2-46	DD-46	DD-47	DD-45	NC2002E	E3, E4	E-304 SH.2B
B	1	TB3-79	TB3-9	TB3-8	TB3-7	TB3-6.80	TB3-39	TB3-68	TB3-40	TB3-41	TB3-43	TB3-44	TB3-46	AA-6	AA-7	AA-5	NC2016E	K3, K4	E-304 SH.23

SCHEME NO.	EQUIPMENT NO.	DESCRIPTION	CONTROL SWITCH NO.	CONTROL SWITCH LOCATION	AUX RELAY (LOCAT. 2C209) RELAY NO.		RELAY NO. & CONTACT NO.	SEPARATION RELAY NO.	SEP. RELAY LOC.(CHL/CONT.)	VALVE LIMIT SWITCH NO.	VALVE LIMIT SWITCH LOC.	CONTROL RELAYS TERM NO.	CONTROL RELAYS LOC.	PENETRATION ELECTRODE HOLDER	PENETRATION NO.
2R0023	HV-2G108A1	DRYWELL FLOOR DRN 1B ISO VALVE	HS-26108A1	2CG01-1GC	NSX1-26108A1	62HSX-26108A1	LSHX-26102A&B CONT. A, B	HSX2-26108A1	2C209 / 2C209A	25-3 & 25-4	VH-26108A1	(T2, M2) 42X-26108A1, B1	2C209	SUMP A LE-26105A	2W106C
2R0024	HV-2G108A2	DRYWELL FLOOR DRN 0B ISO VALVE	HS-26108A2	2CG01-1GC	NSX1-26108A1	62HSX-26108A2	LSHX-26102A&B CONT. D, E	HSX2-26108A2	2C209 / 2C209B	25-3 & 25-4	HV-26108A2 VH-26108A1	(T3, M3) 42X-26108A1, B	2C209	SUMP B LE-26105B	2W106D

LEVEL SWITCH NO.	LEVEL SWITCH LOC.	ALARM NO/WIN NO.	2CG01-1GC (WIRE & TERM NOS) 2	12	XI	120V AC PWR SUP PNL NO.	BKR NO.	LOCAL CONTROL PANEL 2C209 (WIRE & TERM NO'S) FU NO.	2	12	XI	XI	Z	LEVEL CONT. NO/LOC
LS-26105A	2CB201	LAHH-26105A (5-1)	BB-50	BB-36	BB-37	2Y219	06	1	TB1-01	TB1-03	TB1-02	TB1-08	TB1-09	LSH-26102A, B (2C209)
LS-26105B	2CB202	LAHH-26105B (5-2)	CC-33	CC-28	CC-29	2Y219	06	2	TB1-16	TB1-27	TB1-17	TB1-26	TB1-25	LSH-26102A, B (2C209)

REFERENCE DWG'S. BECHTEL NO.	PL. NO.
E-42	A-107191
E-25, SH.2,4	E-107174
J-161, SH.3	B-103451
E-184, SH.3	D-107333
V/P 8855 J-46-3-4	FF-104460

NO.	DATE	REVISIONS	BY	CHK'D	SUPV	ENG'R	PROJ MGR	APP'D
5	8/4/82	REV PER DCP 732	JL	B-L				
4	4/14/82	REV. PER DCP 538.2E, REV 1 & 720.2, 732	NG					
3	1/19/81	REV. TO INCORP. DCP. 025.2	DG	RS				
2	8/8/81	REV TO INCORP FCR E-11420 & FCN E-3737	JL	VAK				
1	4/7/76	ISSUED FOR CONSTRUCTION	JY	JD	TSC	EAK DR	MTL EN	

SCALE NONE | DESIGNED J. YEN | DRAWN M. SUN

PENNSYLVANIA POWER & LIGHT COMPANY
ALLENTOWN, PENNSYLVANIA
SUSQUEHANNA STEAM ELECTRIC STATION – UNIT 1, UNIT 2

BECHTEL – SAN FRANCISCO

SCHEMATIC DIAGRAM
LIQUID RADWASTE COLLECTION DRYWELL FLOOR DRAIN SUMP ISOLATION VALVES-UNIT 2

JOB No.	DRAWING No.	REV.
8856	E-159 SH.14	9
	D-107308 SH.14	

PRC APERTURE CARD
Document #50-387
Control #8303220117-28
Date 3/10/83 of Document:
REGULATORY DOCKET FILE
BUSINESS CONFIDENTIAL SHOP REFERENCE ONLY

D 2 U I O SCHEM DIAG LIG RAOW COLL. W

24X
I certify that the microfilmed image contained on this microform were made in the normal and regular course of business. This is a true, full, correct and complete reproduction and replacement for and/or in lieu of original documents contained by the Bechtel group of companies.
P.C. AKINS Date 11-1082 Camera Type MRG 1
Camera Operator

This drawing, and the design it covers, are the property of BECHTEL. They are exclusively loaned and on the borrower's express agreement that they will not be reproduced, copied, loaned, exhibited, nor used except in the limited way and private use permitted by any written consent given by the lender to the borrower.

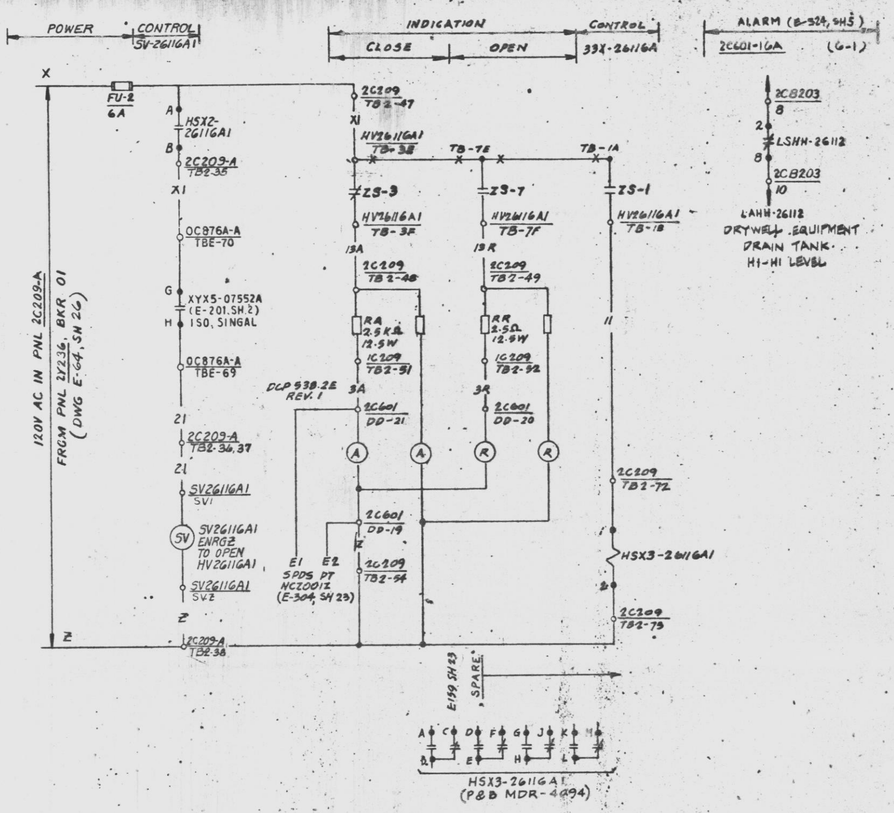

LRW COLL DRYWELL EQUIP DRAIN TANK 2T-218
ISO VALVE HV-26116A1 CONTROL

SCHEME NO 2R0015

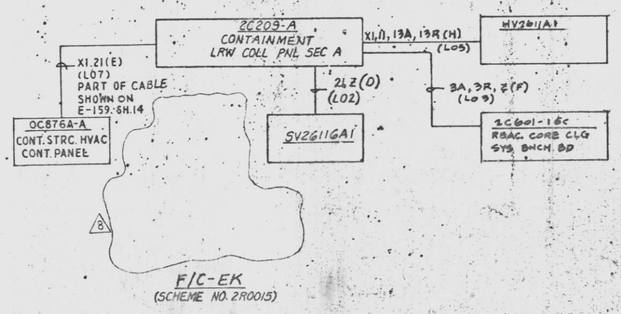

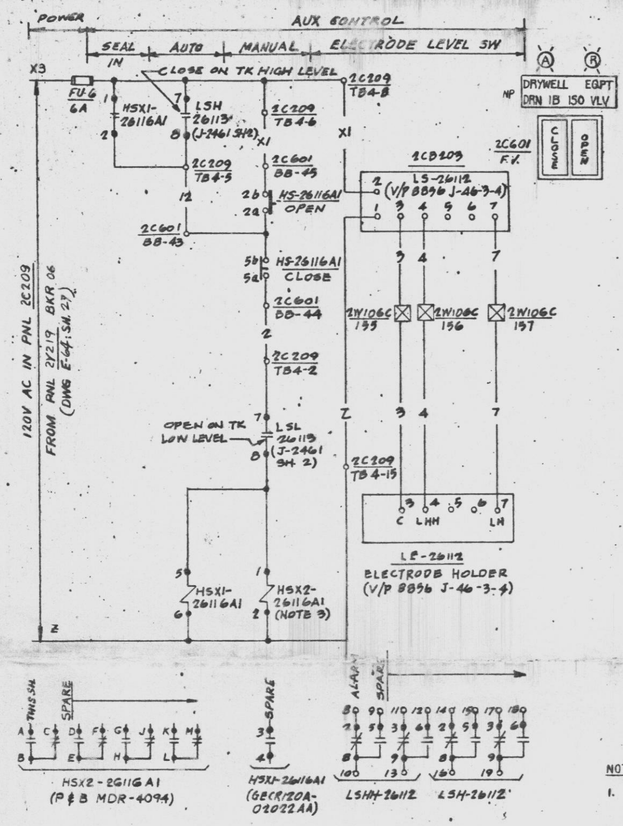

ISO VALVE HV-26116A1 INDICATION CONTROL

SCHEME NO 2R0025

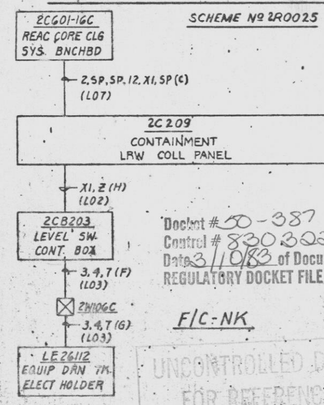

REFERENCE DWG'S.	
BECHTEL NO.	PL. NO.
E-42	A-107191
E-25, SH. 2, 4	E-107174
J-161 SH. 3	B-103451
E-184, SH. 3	D-107333
VP 8856 J-46-3-4	FF-104460

Docket # 50-387
Control # 8303220117
Date 3/10/83 of Document:
REGULATORY DOCKET FILE

F/C-NK

UNCONTROLLED DOCUMENT FOR REFERENCE ONLY

EDWARD K. KANG — 4/1/82

CONTACT No.	POSITION CLOSE	POSITION OPEN	DRAWING No.	CONTACT BLOCK CAT. No.
1a–1b	X		SPARE	KLA3
2a–2b		X	THIS SHEET	
3a–3b		X	THIS SHEET	KLA3
4a–4b	X		SPARE	

CONTROL SW: HS-26116A1
CUTLER HAMMER TYPE E-30AB
MOMENTARY CONTACTS

VALVE LIMIT SWITCH DEVELOPMENT

SWITCH	CONTACT	100% OPEN	INTERMEDIATE	100% CLOSED	CONTACT USED
CLOSE (UPPER)	2S-1 A–B				THIS SH.
	2S-2 C–D				SPARE
OPEN (UPPER)	2S-3 E–F				THIS SH.
	2S-4 G–H				SPARE
CLOSE (LOWER)	2S-5 A–B				SPARE
	2S-6 C–D				SPARE
OPEN (LOWER)	2S-7 E–F				THIS SH.
	2S-8 G–H				SPARE

CONTACT CLOSED

HV-26116A1

NOTES:

1. FOR STANDARD SYMBOLS FOR ELECTRICAL DIAGRAMS SEE DWG E-42
2. FOR LOGIC DIAGRAM SEE DWG J-161, SH.3
3. SEPARATION RELAY MOUNTED IN PANEL 2C209 CONTACTS ARE IN SEC A. ALL WIRING ASSOCIATED WITH CONTACTS SHALL BE WITHIN SEC A.
4. FIELD TO CONVERT THIS CONTACT TO NC

NO.	DATE	REVISIONS	BY	CHK'D	ENGR	SUPV ENGR	APP'D
E	11/5/82	REV TO INCORP FCR E-11420	JL	WK	JB		
D	11/4/82	REVISED PER DCP 838.23, 838.1 & DCP 700.2 REV. 0	PC	[illegible]	JB		
C	9/1/82	REV TO INCORP DCP 025.2	DG	RS	JB		
B	7/6/81	REVISED VNL & LIM. SW. TERM. & REVISED ESS CRT. (DCR42)	JL	RS	JB		
A	7/1/81	ISSUED FOR CONSTRUCTION	KJ	JB	JB		

SCALE NONE | DESIGNED J. YEN | DRAWN R. FONG | TRACED | CHK'D

PENNSYLVANIA POWER & LIGHT COMPANY
ALLENTOWN, PENNSYLVANIA
SUSQUEHANNA STEAM ELECTRIC STATION – UNIT 1, UNIT 2
BECHTEL – SAN FRANCISCO

SCHEMATIC DIAGRAM
LIQUID RADWASTE COLLECTION DRYWELL EQUIPMENT DRAIN TANK ISOLATION VALVE A1-UNIT2

JOB No.	DRAWING No.	REV.
8856	E-159 SH 16	8
D-107308 SH 16		

PRC APERTURE CARD

24X
P.C. AKINS 11-1082 MRG 1

This drawing and the design it covers are the property of BECHTEL. They are merely loaned and on the borrower's express agreement that they will not be reproduced, copied, loaned, exhibited, nor used except in the limited way and private use permitted by any written consent given by the holder to the borrower.

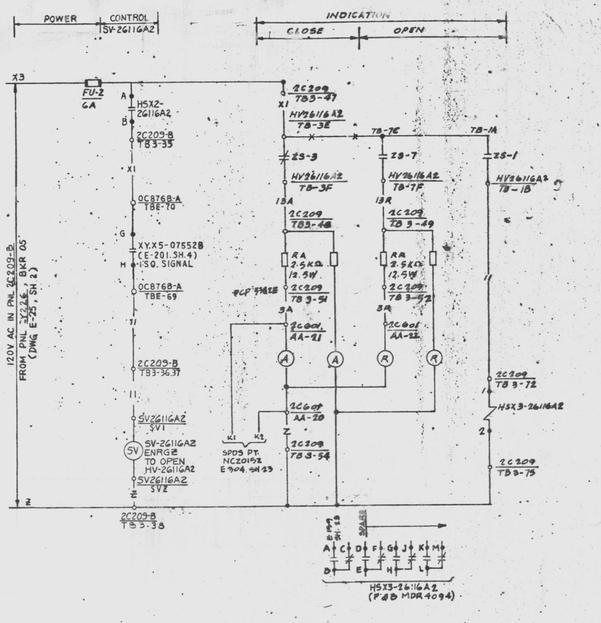

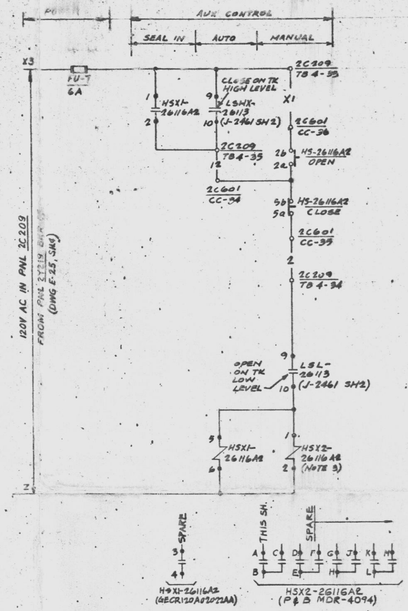

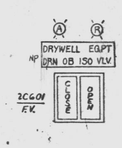

BLOCK No.	CONTACT No.	POSITION CLOSE	POSITION OPEN	DRAWING No.	CONTACT BLOCK CAT. No.
SECTION B	1a 1b	X		SPARE	KLA3
	2a 2b		X	THIS SHEET	
	3a 3b		X	THIS SHEET	KLA3
	4a 4b	X		SPARE	

CONTROL SW: HS-2611GA2
CUTLER HAMMER TYPE E-30AB
MOMENTARY CONTACTS

VALVE LIMIT SWITCH DEVELOPMENT

SWITCH	CONTACT	100% OPEN	INTERMEDIATE	100% CLOSED	CONTACT USED
CLOSE LIMIT SWITCH (UPPER)	56-1 A-1-B				THIS SH.
	56-2 C-1-D				SPARE
	56-3 E-1-F				THIS SH.
	56-4 G-1-H				SPARE
OPEN LIMIT SWITCH (LOWER)	56-5 A-1-B				SPARE
	56-6 C-1-D				SPARE
	56-7 E-1-F				THIS SH.
	56-8 G-1-H				SPARE

CONTACT CLOSED

HV-2611GA2

NOTES:
1. FOR STANDARD SYMBOLS FOR ELECTRICAL DIAGRAMS SEE DWG E-42
2. FOR LOGIC DIAGRAM SEE DWG J-161, SH.3
3. SEPARATION RELAY MOUNTED IN PANEL 2C209. CONTACTS ARE IN SEC B. ALL WIRING ASSOCIATED WITH CONTACTS SHALL BE WITHIN SEC B.

LIQ RADW COLLECTION
DRYWELL EQUIP DRAIN TANK 2T-218
ISO VALVE HV-2611GA2 CONTROL II
SCHEME NO. 2R0016

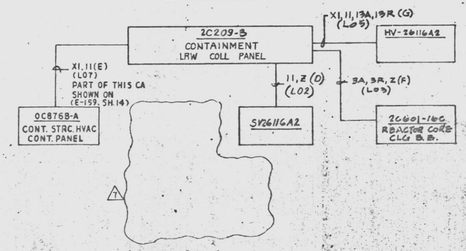

ISO VALVE HV-2611GA2
INDICATION CONTROL
SCHEME NO 2R0026

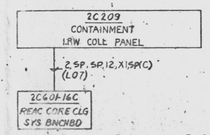

REFERENCE DWG'S.	
BECHTEL NO.	PL NO.
E-42	A-107191
E-25, SH. 2,4	E-107174
J-161 SH. 3	B-103451
E-184, SH. 3	D-107333
VIP 8836 J-46, 3-4	FF-104460

Docket # 50-387
Control # 8603220117-30
Date 3/10/83 of Document:
REGULATORY DOCKET FILE

UNCONTROLLED DOCUMENT FOR REFERENCE ONLY

MARK	DATE	REVISIONS	BY	CHK'D	APP'D
A	3/6/81	REVISED PNL.'S, LIM. SW. TERM. & REVISED ESS CKT. (DCP 425)	JL	KS	
A	7/5/82	KEY TO INCORP FCR E-11420	JL	MK	
A	7/26/82	REVISED ESS PNL'S 2B, 2E, 2EV1 & DCP 710.2, ECN 0	RG	MK	
A	11/2/82	REV. TO INCORP DCP 025.2	RG	KS	
A	1/11/83	ISSUED FOR CONSTRUCTION	KM	MK	

SCALE NONE | DESIGNED J. YEN | DRAWN R. FONG

PENNSYLVANIA POWER & LIGHT COMPANY
ALLENTOWN, PENNSYLVANIA
SUSQUEHANNA STEAM ELECTRIC STATION - UNIT 1, UNIT 2
BECHTEL - SAN FRANCISCO

SCHEMATIC DIAGRAM
LIQUID RADWASTE COLLECTION DRYWELL EQUIPMENT DRAIN TANK ISOLATION VALVE A2-UNIT 2

JOB No.	DRAWING No.	REV.
8856	E-159 SH 17	7
D-107308 SH 17		

PRC APERTURE CARD

D

24X
P.C. ATKINS H-052 MRG 1

This drawing and the design it covers are the property of BECHTEL. They are merely loaned and on the borrower's express agreement that they will not be reproduced, copied, loaned, exhibited, nor used except in the limited way and period use prescribed by any written consent given by the lender to the borrower.

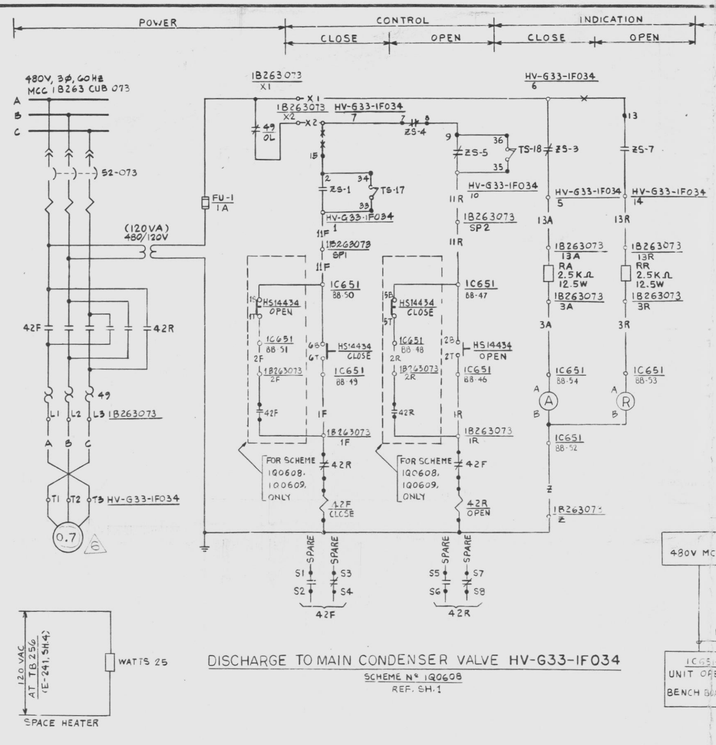

SWITCH DEVELOPMENT

A	R
DRAIN VALVE TO MAN CDSR FO54	

IC651 F.V.

BLOCK NO.	CONTACT NO.		POSITION CLOSE	POSITION OPEN	DRAWING NO.	CONTACT BLOCK NO
1	180	2 OTT	1	X	THIS SH	XLA3
	210	OTT	2	X	THIS SH	
5	150	6 OTT	5	X	THIS SH	XLA3
	180	OTT	6	X	THIS SH	

CONTROL SWITCH: HS-14434, HS-14435, HS-14431, HS-14404B, HS-14442, HS-14444.
CUTLER HAMMER TYPE E-30 AC
MOMENTARY CONTACTS WITH MECHANICAL INTERLOCK
* FOR SCHEME 100608 & 100609 ONLY

VALVE LIMIT SWITCH DEVELOPMENT

CONTACTS	100% OPEN	INTERMEDIATE	100% CLOSED	CONTACT USED
25-1	10-(1-01			THIS SHEET
25-2	30-(1-04			SPARE
25-3	50-(1-06			THIS SHEET
25-4	70-(1-08			THIS SHEET
25-5	90-(1-010			THIS SHEET
25-6	110-(1-012			SPARE
25-7	130-(1-014			THIS SHEET
25-8	150-(1-016			SPARE
25-9	170-(1-018			SPARE
25-10	190-(1-020			THIS SHEET
25-11	210-(1-022			SPARE
25-12	230-(1-024			SPARE
25-13	250-(1-026			SPARE
25-14	270-(1-028			SPARE
25-15	290-(1-030			SPARE
25-16	310-(1-032			SPARE
TS-17	15 or 34	OPEN ON HIGH CLOSING TORQUE		THIS SHEET
TS-18	35 or 36	OPEN ON HIGH OPENING TORQUE		THIS SHEET

CONTACT CLOSED

HV-G33-1F031, HV-G33-1F034, HV-G33-1F035, HV-G33-1F042
HV-G33-1F044, HV-G33-1F104

NOTES:
1. ALL DEVICE NO'S TO BE SUFFIXED BY STARTER LOCATION NO. UNLESS NOTED OTHERWISE.
2. FOR STANDARD SYMBOLS FOR ELECTRICAL DIAGRAMS SEE 8856-E-42.
3. DESIGN BASED ON G.E. APED ELEMENTARY 7716429 WC(V)P 8856-M1-033-155
4. FOR SCHEME 100608 & 100609 CABLE C USE. USE CABLE CODE, OTHER SCHEMES ON THE TABULATION USE LOT CABLE CODE AND DELETE WIRE NO. 27 & 2R

SCHEME NO.	VALVE NUMBER	VALVE DESCRIPTION	H.P.	SPACE HEATER 120V AC	STARTER LOCATION	CONTROL SWITCH NUMBER	CONTROL SWITCH LOC	F/C	ESS DIV	IC651 WIRE & TERMINAL NOS. 1F	1R	2F	2R	1A	3A	3R	1IF	1IR	2Z	COMPUTER	COMPUTER INPUT
1Q0608	HV-G33-1F034	DRAIN VALVE TO MAIN CDSR FO54	0.7	TB256	1B263073	HS14434	IC651-01C	NK/HP	—	88-19	88-46	88-54	88-47	88-53	88-50	88-47	88-51	190-(1-020 E-301 SH.102	NL202
1Q0609	HV-G33-1F035	DRAIN VALVE TO LIQ RW F235	0.7		1B253033	HS14435	IC651-01C	NK/NP	—	88-49	88-37	88-42	88-39	88-45	88-44	88-41	88-38	88-43		09
1Q0610	HV-G33-1F031	DRAIN FLO ORFC BPV FO31	0.66		1B253072	HS14431	IC651-01C	NK/NP	—	88-16	88-10	–	–	88-16	88-17	88-14	88-11	88-16	270-(1-028 E-301 SH101	01
1Q0611	HV-G33-1F104	CLEANUP SYSTEM BYPS VLV F104	0.33		1B217013	HS14404B	IC651-01C	EK/EP	I	AA-40	AA-37	–	–	AA-45	AA-44	AA-41	AA-38	AA-43	270-(1-028 E-301 SH101	10
1Q0612	HV-G33-1F042	CLNUP RET ISO VLV F042	0.33	TB257	1B217011	HS14442	IC651-01C	EK/EP	I	AA-21	AA-28	–	–	AA-35	AA-35	AA-32	AA-29	AA-34	270-(1-028 E-301 SH101	04
1Q0613	HV-G33-1F044	CLNUP AND DEMIN BPV F044	0.33		1B263093	HS14444	IC651-01C	NK/NP	—	88-4	88-1	–	–	88-5	88-8	88-5	88-2	88-7	27-(1-028 E-301 SH101	09

REFERENCE DWGS.	
BECHTEL NO.	PL. NO.
E-42	A-107191
MI-G33-153(1)	FF-133010
E-301	D-107450

Docket #50-387
Control #8305020031-31
Date 10/83 of Document:
REGULATORY DOCKET FILE

EDWARD K. KANG — REGISTERED PROFESSIONAL ENGINEER — COMMONWEALTH OF PENNSYLVANIA

NO.	DATE	REVISIONS	BY	CHK	ENG	PROJ	APP'D
5	8/31/83	REVISED TO INCORPORATE DCN #1 (PCR WG-0571) (DCR 42)	GJB	JMM	RE	EKK	
4	7/21/83	ADDED COMPT INPUT REF. NO.& INCORPORATED DCN #1 (DCR 42)	TMB	JB	TL	EKK	
3	6/24/83	ADDED P/E NOS. & REV. TERMINAL NOS. FOR IC651-01C	GJB	JMM	RE	EKK	
2	5/13/83	REV. MOV. LIM SW CAT PER S.E. MOD & ADDED TERM NO.	L	JB	TL	EKK	
1	4/8/83	ISSUED "AS BUILT" REV'D MOTOR HP AS BUILT (DCR 42)	TMB	JMM	JL	EKK	
0	3/23/83	ISSUED FOR CONSTRUCTION	GJB	M.T	SB	EKK	
A	7/14/82	ISSUED FOR INFORMATION	GJB	MT	SB	EKK	

SCALE NONE — DESIGNED A. FLIER — DRAWN W.Y. CHAN

PENNSYLVANIA POWER & LIGHT COMPANY
ALLENTOWN, PENNSYLVANIA
SUSQUEHANNA STEAM ELECTRIC STATION – UNIT 1, UNIT 2

BECHTEL – SAN FRANCISCO

SCHEMATIC DIAGRAM
REACTOR WATER CLEANUP SYSTEM
MO VALVES – UNIT1

JOB No.	DRAWING No.	REV.
8856	E-165 SH4	6
D-107314 SH4		

D

BTPS SCHEM DIAG REAC WTR CU SYS W

PRC APERTURE CARD

THIS DOCUMENT IS UNDER PP&L ADMINISTRATIVE CONTROL. NO CHANGES CAN BE MADE WITHOUT PRIOR PP&L APPROVAL.

UNCONTROLLED DOCUMENT FOR REFERENCE ONLY

24X

I certify that the microfilmed image contained on this microform were made in the normal and regular course of business. This is a true, full, correct and complete reproduction and replacement for and/or in lieu of original documents generated by the Bechtel group of companies.
Signed JADINTO Date 6-17-83 Camera Type MRG I
Camera Operator

This drawing and the design it covers are the property of BECHTEL. They are merely loaned and on the borrower's express agreement that they will not be reproduced, copied, loaned, exhibited, nor used except in the limited way and private use permitted by any written consent given by the lender to the borrower.

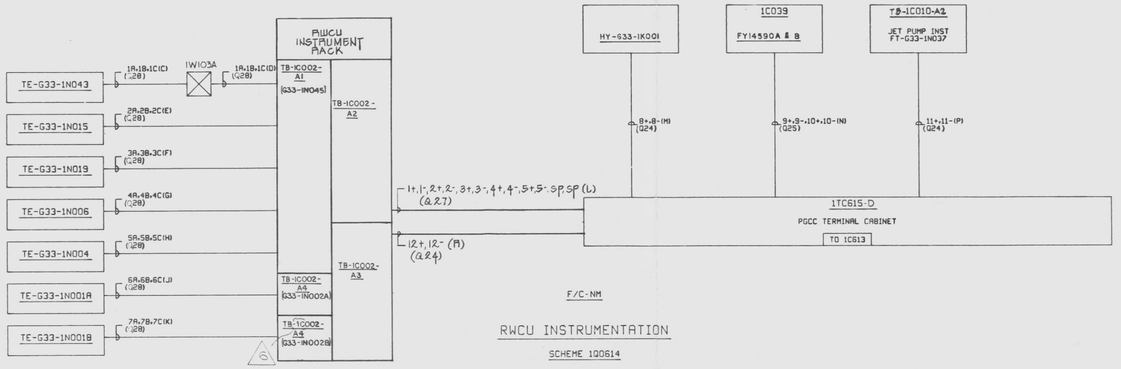

NOTES

1. FOR STANDARD SYMBOLS FOR ELECTRICAL DIAGRAMS SEE 8856-E-42.
3. ENERGIZING OF SV14433 PERMITS CONTROL OF HV-G33-1F033 BY HIC-G33-1R606.
4. FOR 120V AC POWER SUPPLY SEE E-64 SH.17

PRC APERTURE CARD

UNCONTROLLED DOCUMENT FOR REFERENCE ONLY

THIS DOCUMENT IS UNDER PP&L ADMINISTRATIVE CONTROL. NO CHANGES CAN BE MADE WITHOUT PRIOR PP&L APPROVAL.

REFERENCE DWG'S.	
BECHTEL NO.	PL. NO.
E-42	A-107191
MI-G33-140	FF-133010

NO.	DATE	REVISIONS	BY	CHK	DESIGN SUPV	ENG'R	PROJ ENGR	APP'S
6	6/19/82	ISSUED "AS BUILT" REV'D TB NO. (DCR 42)	TJY	FMH	[illegible]	[illegible]	[illegible]	
5	5/14/81	ADDED INFO PER DCR 42	RL	[illegible]	[illegible]	[illegible]	[illegible]	
4	4/18/80	REVISED PER PCR-B-1629 & DFR 985 (DCR #42)	[illegible]	[illegible]	[illegible]	[illegible]	[illegible]	
3	5/24/75	ISSUED FOR CONSTRUCTION	JB	M.T.	[illegible]	[illegible]	[illegible]	
2	7/14/74	ISSUED FOR INFORMATION	AF	MT JD	AB	UR EK	GP	

SCALE NONE | DESIGNED A.FLIER | DRAWN W.Y.CHAN

PENNSYLVANIA POWER & LIGHT COMPANY
ALLENTOWN, PENNSYLVANIA
SUSQUEHANNA STEAM ELECTRIC STATION - UNIT 1, UNIT 2

BECHTEL - SAN FRANCISCO

BLOCK DIAGRAM
REACTOR WATER CLEANUP SYSTEM
INSTRUMENT CKT UNIT 1

JOB No.	DRAWING No.	REV.
8856	E-165 SH 5	6

D-107314 SH 5

Docket #50-387
Control #8303220117-3
Date 3/10/83 of Document:
REGULATORY DOCKET FILE

GIT99 SCHEM RWC INSTRUMENT CKT

I certify that the microfilmed image contained on this microform were made in the normal and regular course of business. This is a true, full, correct and complete reproduction and replacement for and/or in lieu of original documents generated by the Bechtel group of companies.
Signed JACINTO Date 6-17-82 Camera Type MRO I
Camera Operator

24X

D

This drawing and the design it covers are the property of BECHTEL. They are merely loaned and on the borrower's express agreement that they will not be reproduced, copied, loaned, exhibited, nor used except in the limited way and private use permitted by any written consent given by the lender to the borrower.

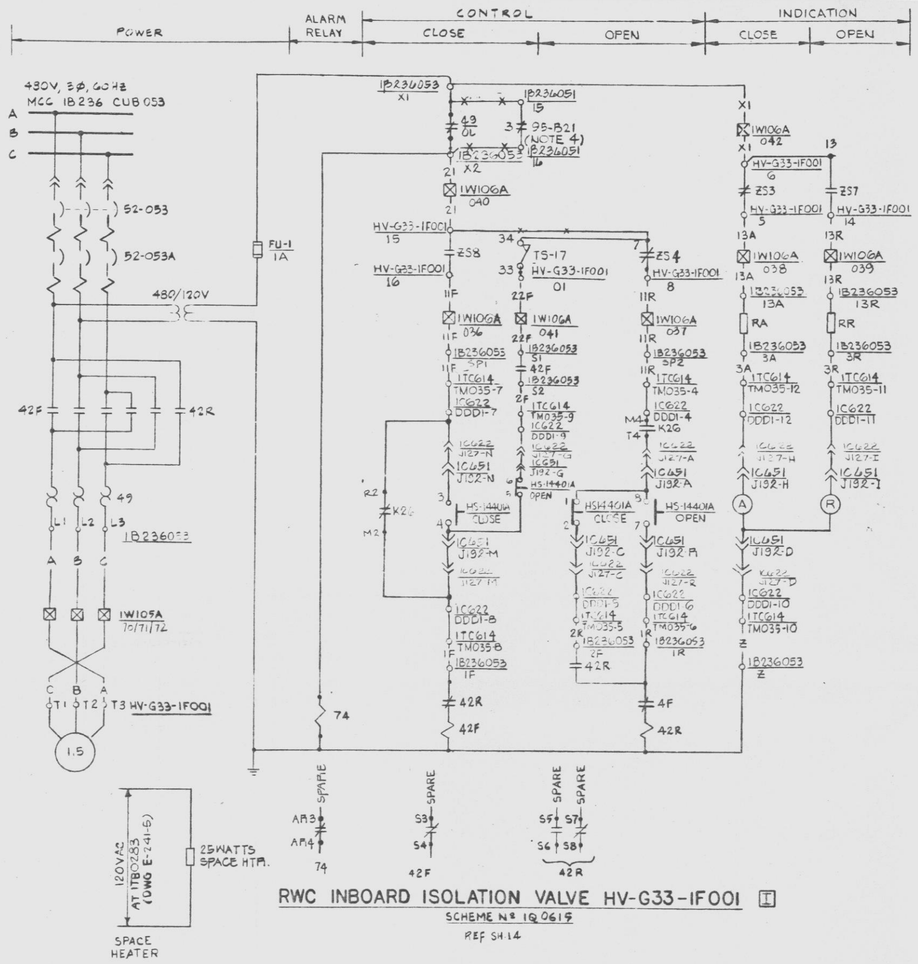

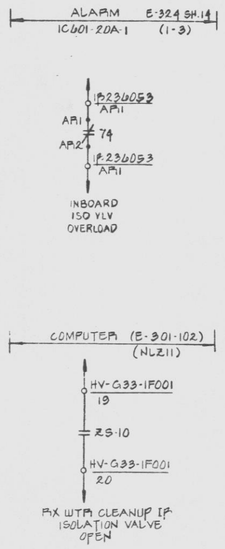

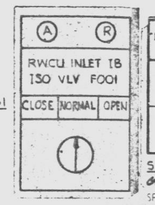

SWITCH DEVELOPMENT

BLOCK No.	CONTACT No.		POSITION OPEN	POSITION NORMAL	POSITION CLOSE	DRAWING No.
TOP	1 2 1 2	F	X	X		THIS SH
	3 0 0 4	B			X	THIS SH
BTM	5 2 1 2 6	F		X	X	THIS SH
	7 0 0 8	B	X			THIS SH

SELECTOR SWITCH: HS1440IA (SIS)
GENERAL ELECTRIC TYPE CR2940
SPRING RETURN TO NORMAL POSITION

VALVE LIMIT SWITCH DEVELOPMENT

	CONTACT		100% OPEN	INTERMEDIATE	100% CLOSED	CONTACT USED
CLOSE(LOWER) OPEN(UPPER) SWITCH	ZS-1	A⊣⊢B				SPARE
	ZS-2	C⊣⊢D				E-164 SH.1
	ZS-3	E⊣⊢F				E-164 SH 2
	ZS-4	G⊣⊢H				SPARE
	ZS-5	A⊣⊢B				SPARE
	ZS-6	C⊣⊢D				SPARE
	ZS-7	E⊣⊢F				SPARE
	ZS-8	G⊣⊢H				SPARE

CONTACT CLOSED

STEM MOUNTED LIMIT SWITCH DEVELOPMENT
HV-G33-1F001

NAMCO D2400X

VALVE LIMIT SWITCH DEVELOPMENT

CONTACTS		100% OPEN	INTERMEDIATE	100% CLOSED	CONTACT USED
ZS-1	1 0—11—0 2				SPARE
ZS-2	3 0—11—0 4				SPARE
ZS-3	5 0—11—0 6				THIS SH
ZS-4	7 0—11—0 8				THIS SH
ZS-5	9 0—11—010				SPARE
ZS-6	11 0—11—012				SPARE
ZS-7	130—11—014				THIS SH
ZS-8	150—11—016				THIS SH
ZS-9	170—11—018				SPARE
ZS-10	190—11—020				THIS SH.
ZS-11	210—11—022				SPARE
ZS-12	230—11—024				SPARE
ZS-13	250—11—026				SPARE
ZS-14	270—11—028				SPARE
ZS-15	290—11—030				SPARE
ZS-16	310—11—032				SPARE
TS-17	33—or—34		OPEN ON HIGH CLOSING TORQUE		THIS SH
TS-18	35—or—36		OPEN ON HIGH OPENING TORQUE		SPARE

CONTACT CLOSED

HV-G33-1F001

NOTES

1. ALL DEVICE Nºs TO BE SUFFIXED BY STARTER LOCATION Nº UNLESS NOTED OTHERWISE.
2. FOR STANDARD SYMBOLS FOR ELECTRICAL DIAGRAMS SEE DWG E-42.
3. DESIGN BASED ON G.E. ADDED ELEM. DIAG. 7SIE4CTWX V/P 8856-M1-B21-131(14).
4. FOR CONTACT 35-B21 SEE DWG. E-185 SH.2
5. FIELD TO VERIFY ZS CONTACT THAT CLOSE WHEN VALVE IS FULLY OPEN.

PRC APERTURE CARD

THIS DOCUMENT IS UNDER PP&L ADMINISTRATIVE CONTROL. NO CHANGES CAN BE MADE WITHOUT PRIOR PP&L APPROVAL.

NO.	DATE	REVISIONS	BY	CHKD	DESIGN SUPV	ENGR	PROJ ENGR	APPR
13	8/3/81	INCORP DCN Nº1 (SEP WO X-10) FOR E-9161 REV 4 E-10317 DCN Nº1 (SEP WO X-10)	DMN					
12	4/1/80	ADDED STEM MOUNTED LIMIT SWITCH DEVELOPMENT, REV CONTACT INTERLOCK (SFR 1629)	ENA	RB				
11	6/17/77	REVD TO INCORP CAN E-3241 ISSUED AS BUILT	CLN					
10	7/23/82	REVD TO DELETE WP 5381E REV 1 PER SFR-2690	CLN					
9	11/5/81	REVD PER DCP 5381E REV 1	A					
8	5/21/81	ISSUED FOR CONSTRUCTION	JB					
7	7/10/79	ISSUED FOR INFORMATION						

SCALE NONE | DESIGNED A. FLIER | DRAWN R. FONG | CHIEF ENGR

REFERENCE DWG'S.	
BECHTEL NO.	PL NO.
E-42	A-107191
E-164	D-107313
E-301	D-107450
M1-B21-101	DF114510
E-324	D-107473
E-185	D-107334

Docket #50-387
Control #8309220117
Date 8/10/83 of Document:
REGULATORY DOCKET FILE

UNCONTROLLED DOCUMENT FOR REFERENCE ONLY

COMMONWEALTH OF PENNSYLVANIA REGISTERED PROFESSIONAL EDWARD K. KANG ENGINEER 17530-E
5/23/25
Edward K. Kang

PENNSYLVANIA POWER & LIGHT COMPANY
ALLENTOWN, PENNSYLVANIA
SUSQUEHANNA STEAM ELECTRIC STATION - UNIT 1, UNIT 2
BECHTEL - SAN FRANCISCO

SCHEMATIC DIAGRAM
REACTOR WATER CLEANUP SYSTEM
INBOARD ISOL VALVE - UNIT 1

JOB No.	DRAWING No.	REV.
8856	E-165 SH 6	12
D-107314 SH 6		

22 x 34 "D" SIZE

G I T 9 7 | SCHEM RWC INBOARD ISO VLVE | W

24X
I certify that the microfilmed image contained on this microform were made in the normal and regular course of business. This is a true, full, correct and complete reproduction and replacement for and/or in lieu of original documents made by the Bechtel system of recordkeeping.
Camera Operator RHEY Date 6/7/83 Camera Type MRG-II

D

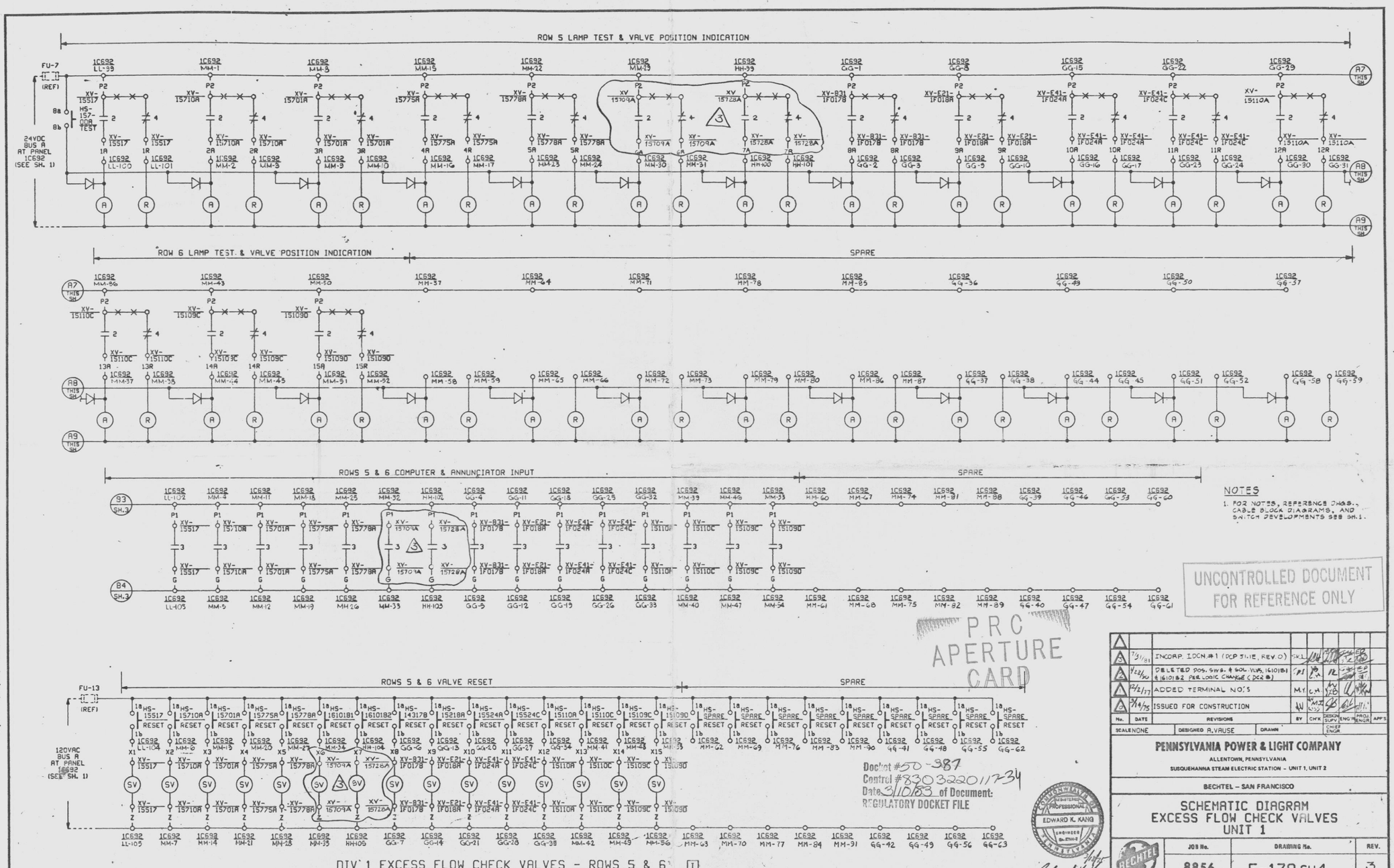

DIV 1 EXCESS FLOW CHECK VALVES - ROWS 5 & 6 [I]

SCHEME NO. 1Q4103

NOTES

1. FOR NOTES, REFERENCE DWGS., CABLE BLOCK DIAGRAMS, AND SWITCH DEVELOPMENTS SEE SH. 1.

UNCONTROLLED DOCUMENT FOR REFERENCE ONLY

PRC APERTURE CARD

Docket #50-387
Control #8303220117-34
Date 3/10/83 of Document:
REGULATORY DOCKET FILE

No.	DATE	REVISIONS	BY	CH'K	DESIGN SUPV.	ENG'R	PROJ. ENGR.	APP'S
3	7/31/81	INCORP. IDCN #1 (DCP 51.1E, REV. 0)	SKL					
2	4/22/80	DELETED POS. SWS. & SOL. VLVS. 1610181 & 1610182 PER LOGIC CHANGE (DCR 8)	CPI					
1	12/2/77	ADDED TERMINAL NO'S	M.Y.	C.H.				
0	3/14/75	ISSUED FOR CONSTRUCTION						

SCALE NONE | DESIGNED A. VAUSE | DRAWN | CHIEF ENGR.

PENNSYLVANIA POWER & LIGHT COMPANY
ALLENTOWN, PENNSYLVANIA
SUSQUEHANNA STEAM ELECTRIC STATION – UNIT 1, UNIT 2

BECHTEL – SAN FRANCISCO

SCHEMATIC DIAGRAM
EXCESS FLOW CHECK VALVES
UNIT 1

JOB No.	DRAWING No.	REV.
8856	E-178 SH4	3

D-107327 SH4

G1T01 SCHEM EXCESS FLOW CK VLVES W

This drawing and the design it covers are the property of BECHTEL. They are merely loaned and on the borrower's express agreement that they will not be reproduced, copied, loaned, exhibited, nor used except in the limited way and private use permitted by any written consent given by the lender to the borrower.

24X

DANNY 8-10-81 Camera Type

D

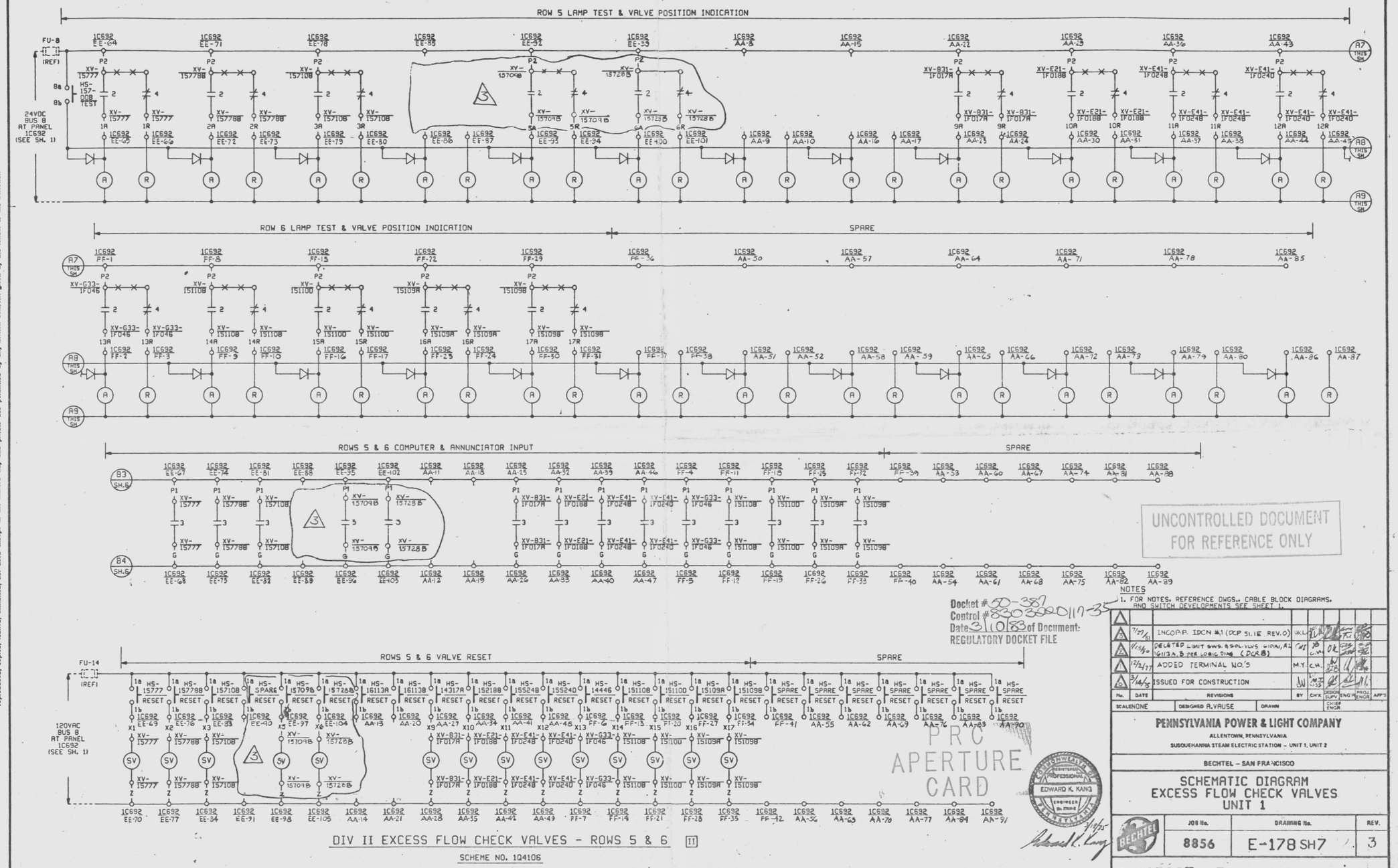

DIV II EXCESS FLOW CHECK VALVES - ROWS 5 & 6 II

SCHEME NO. 1Q4106

NOTES

1. FOR NOTES, REFERENCE DWGS., CABLE BLOCK DIAGRAMS, AND SWITCH DEVELOPMENTS SEE SHEET 1.

Docket # 50-387
Control # 8303220117-35
Date 3/10/83 of Document:
REGULATORY DOCKET FILE

UNCONTROLLED DOCUMENT FOR REFERENCE ONLY

PRC APERTURE CARD

No.	DATE	REVISIONS	BY	CH'K	DESIGN SUPV	ENG'R	PROJ ENGR	APP'S
3	7/27/81	INCORP. IDCN #1 (DCP 51.1E, REV. 0)	H.L.					
2	1/13/80	DELETED LIMIT SWS. & SOL. VLVS 610A1, R2 16113A, B PER LOGIC DIAG (DCR 8)						
1	12/2/77	ADDED TERMINAL NO.'S	M.Y.	C.H.				
0	3/14/75	ISSUED FOR CONSTRUCTION						

SCALE NONE | DESIGNED A. VAUSE | DRAWN

PENNSYLVANIA POWER & LIGHT COMPANY
ALLENTOWN, PENNSYLVANIA
SUSQUEHANNA STEAM ELECTRIC STATION - UNIT 1, UNIT 2

BECHTEL - SAN FRANCISCO

SCHEMATIC DIAGRAM
EXCESS FLOW CHECK VALVES
UNIT 1

JOB No.	DRAWING No.	REV.
8856	E-178 SH7	3

D-107327 SH7

GITO1 - SCHEM EXCESS FLOW CK VLVES W

This drawing and the design it covers are the property of BECHTEL. They are merely loaned and on the borrower's express agreement that they will not be reproduced, copied, loaned, exhibited, nor used except in the limited way and private use permitted by any written consent given by the lender to the borrower.

24X

D

This drawing and the design it covers are the property of BECHTEL. They are merely loaned and on the Borrower's express agreement that they will not be reproduced, copied, loaned, exhibited, nor used except in the limited way and private use permitted by any written consent given by the lender to the Borrower.

XV-B21-2F009 | XV-B21-2F070A | XV-B21-2F073A | XV-B21-2F070B | XV-B21-2F073B | XV-B21-2F070C | XV-B21-2F073C | XV-B21-2F070D | XV-B21-2F073D | XV-B21-2F041 | XV-B21-2F043A | XV-B21-2F047A

1A,1R,Ø,PI, P2,X1,Z(A) (LOT) | 2A,2R,Ø,PI, P2,X2,Z(B) (LOT) | 3A,3R,Ø,PI, P2,X3,Z(C) (LOT) | 4A,4R,Ø,PI, P2,X4,Z(D) (LOT) | 5A,5R,Ø,PI, P2,X5,Z(E) (LOT) | 6A,6R,Ø,PI P2,X6,Z(F) (LOT) | 7A,7R,Ø,PI P2,X7,Z(G) (LOT) | 8A,8R,Ø,PI, P2,X8,Z(H) (LOT) | 9A,9R,Ø,PI, P2,X9,Z(J) (LOT) | 10A,10R,Ø,PI, P2,X10,Z(K) (LOT) | 11A,11R,Ø,PI, P2,X11,Z(L) (LOT) | 12A,12R,Ø,PI, P2,X12,Z(M) (LOT)

2C692
MISCELLANEOUS SYSTEMS RECORDING PANEL

13A,13R,Ø,PI, P2,X13,Z(N) (LOT) | 14A,14R,Ø,PI, P2,X14,Z(P) (LOT) | 15A,15R,Ø,PI, P2,X15,Z(Q) (LOT) | 16A,16R,Ø,PI P2,X16,Z(R) (LOT) | 17A,17R,Ø,PI P2,X17,Z(S) (LOT) | 18A,18R,Ø,PI P2,X18,Z(T) (LOT) | 19A,19R,Ø,PI P2,X19,Z(U) (LOT) | 20A,20R,Ø,PI, P2,X20,Z(V) (LOT) | 21A,21R,Ø,PI, P2,X21,Z(W) (LOT) | 22A,22R,Ø,PI P2,X22,Z(X) (LOT) | 23A,23R,Ø,PI, P2,X23,Z(Y) (LOT) | 24A,24R,Ø,PI, P2,X24,Z(Z) (LOT)

XV-B21-2F043A | XV-B21-2F039A | XV-B21-2F039C | XV-B21-2F059B | XV-B21-2F059A | XV-B21-2F033A | XV-B21-2F031A | XV-B21-2F059L | XV-B21-2F039N | XV-B21-2F039R | XV-B21-2F059T | XV-B21-2F033C

F/C-EK
SCHEME No. 2Q4101

TYPICAL OF 6 (SEE TABLE A)

TABLE A

SCHEME NUMBER	DIV.	F/C	ROW	VALVE CONTROL SWITCH	VALVE CONTROL SWITCH	VALVE CONTROL SWITCH	VALVE CONTROL SWITCH	VALVE CONTROL SWITCH	VALVE CONTROL SWITCH	VALVE CONTROL SWITCH	VALVE CONTROL SWITCH	VALVE CONTROL SWITCH	VALVE CONTROL SWITCH	VALVE CONTROL SWITCH	VALVE CONTROL SWITCH	SCHEMATIC LOCATION
2Q4101	I	EK	1	XV-B21-2F009	XV-B21-2F070A	XV-B21-2F073A	XV-B21-2F070B	XV-B21-2F073B	XV-B21-2F070C	XV-B21-2F073C	XV-B21-2F070D	XV-B21-2F073D	XV-B21-2F041	XV-B21-2F043A	XV-B21-2F047A	E-178 SH. 9
				HS-24139	HS-24170A	HS-24173A	HS-24170B	HS-24173B	HS-24170C	HS-24173C	HS-24170D	HS-24173D	HS-24241	HS-24243A	HS-24247A	
			2	XV-B21-2F043A	XV-B21-2F039A	XV-B21-2F039C	XV-B21-2F059B	XV-B21-2F059A	XV-B21-2F033A	XV-B21-2F031A	XV-B21-2F059L	XV-B21-2F039N	XV-B21-2F039R	XV-B21-2F059T	XV-B21-2F033C	
				HS-24243A	HS-24239A	HS-24239C	HS-24259B	HS-24259A	HS-24233A	HS-24231A	HS-24259L	HS-24239N	HS-24259R	HS-24259T	HS-24233C	
2Q4102	I	EK	3	XV-B21-2F009	XV-B21-2F001	———	———	———	XV-24201	XV-B21-2F097A	XV-B21-2F003A	XV-B21-2F044A	XV-B21-2F009A	XV-B21-2F010A	XV-B21-2F009B	E-178 SH. 10
				HS-24231G	HS-24201	HS-24233A	HS-24233G	HS-24233F	HS-24201	HS-24237A	HS-24203A	HS-24204A	HS-24209A	HS-24210A	HS-24209B	
			4	XV-B21-2F010B	XV-B21-2F040A	XV-B21-2F040G	XV-B21-2F011A	XV-B21-2F012A	XV-B21-2F011B	XV-B21-2F012B	XV-24411G	XV-24411D	XV-B21-2F044A	XV-B21-2F044G	XV-25516	
				HS-24310B	HS-24340A	HS-24340G	HS-24311A	HS-24312A	HS-24311B	HS-24312B	HS-24411G	HS-24411D	HS-24444A	HS-24444G	HS-25516	
2Q4103	I	EK	5	XV-25517	XV-25710A	XV-25701A	XV-25775A	XV-25778A	XV-25709A	XV-25728A	XV-B21-2F017B	XV-B21-2F018A	XV-B41-2F024A	XV-B41-2F024C	XV-25110A	E-178 SH. 11
				HS-25317	HS-25710A	HS-25701A	HS-25775A	HS-25778A	HS-25709A	HS-25728A	HS-24917B	HS-23218A	HS-25324A	HS-25324C	HS-25110A	
			6	XV-25110C	XV-25109G	XV-25109D	———	———	———	———	———	———	———	———	———	
				HS-25110G	HS-25109G	HS-25109D	HS-SPARE	HS-SPARE	HS-SPARE	HS-SPARE	HS-SPARE	HS-SPARE	HS-SPARE	HS-SPARE	HS-SPARE	
2Q4104	II	FK	1	XV-B21-2F071A	XV-B21-2F072A	XV-B21-2F071B	XV-B21-2F072B	XV-B21-2F071C	XV-B21-2F072C	XV-B21-2F071D	XV-B21-2F072D	XV-B21-2F059B	XV-B21-2F059D	XV-B21-2F059F	XV-B21-2F059H	E-178 SH. 12
				HS-24171A	HS-24172A	HS-24171B	HS-24172B	HS-24171C	HS-24172C	HS-24171D	HS-24172D	HS-24239B	HS-24259D	HS-24259F	HS-24259H	
			2	XV-B21-2F053B	XV-B21-2F031B	XV-B21-2F039M	XV-B21-2F039P	XV-B21-2F039S	XV-B21-2F033D	XV-B21-2F031D	XV-B21-2F053D	XV-B21-2F053	XV-B21-2F057	XV-B21-2F043B	XV-B21-2F047B	
				HS-24233B	HS-24231B	HS-24239M	HS-24259P	HS-24259S	HS-24233U	HS-24231D	HS-24353D	HS-24353	HS-24257	HS-24243B	HS-24247B	
2Q4105	II	FK	3	XV-B21-2F043B	XV-B21-2F039D	XV-B21-2F010G	XV-B21-2F009G	XV-B21-2F010P	XV-23910B	XV-23910F	XV-23910K	XV-23910P	XV-B21-2F037B	XV-B21-2F009B	XV-B21-2F004B	E-178 SH. 13
				HS-24243B	HS-24309D	HS-24310G	HS-24309G	HS-24310D	HS-23910B	HS-23910F	HS-23910K	HS-23910P	HS-24937B	HS-24303B	HS-24043B	
			4	XV-B21-2F011G	XV-B21-2F012G	XV-B21-2F011D	XV-B21-2F012D	XV-B21-2F004B	XV-B21-2F004D	XV-24411A	XV-24411B	XV-B21-2F044B	XV-B21-2F044D	XV-25775B	XV-25776	
				HS-24311G	HS-24312G	HS-24311D	HS-24312D	HS-24340B	HS-24340D	HS-24411A	HS-24411B	HS-24444B	HS-24944D	HS-25773B	HS-25776	
2Q4106	II	FK	5	XV-25777	XV-25778B	XV-25710B	———	XV-25709B	XV-25728B	———	———	XV-B21-2F017A	XV-B21-2F018B	XV-B41-2F024B	XV-B41-2F024D	E-178 SH. 14
				HS-25777	HS-25778B	HS-25710B	HS-SPARE	HS-25709B	HS-25728B	HS-SPARE	HS-SPARE	HS-24917A	HS-23218B	HS-25324B	HS-25324D	
			6	XV-B21-2F046	XV-25110B	XV-25110D	XV-25109A	XV-25109B	———	———	———	———	———	———	———	
				HS-24446	HS-25110B	HS-25110D	HS-25109A	HS-25109B	HS-SPARE	HS-SPARE	HS-SPARE	HS-SPARE	HS-SPARE	HS-SPARE	HS-SPARE	

2C692 F.V.

A R — FOR DWG J-656 FOR NAMEPLATE DETAILS — RESET

BLOCK No.	CONTACT No.		POSITION RESET	DRAWING No.	CONTACT BLOCK CAT No.
1	1a 01b	1	X	SEE TABLE A	KLA1

CONTROL SWITCH: HS-24139 (TYP OF 144 SEE TABLE A)
CUTLER HAMMER TYPE E-30AA
MOMENTARY CONTACTS

2C692 F.V.

G — SEE DWG J-656 FOR NAMEPLATE DETAILS — TEST

BLOCK No.	CONTACT No.		POSITION TEST	DRAWING No.
TOP	1a 01b	F		SPARE
	2a 02b	B	X	DIV I SH 9 DIV II SH 12
BTM	3a 03b	F		SPARE
	4a 04b	B	X	DIV I SH 9 DIV II SH 12
TOP	5a 05b	F		SPARE
	6a 06b	B	X	DIV I SH 10 DIV II SH 13
BTM	7a 07b	F		SPARE
	8a 08b	B	X	DIV I SH 11 DIV II SH 13

CONTROL SWITCH: HS-25700A & HS-25700B
G.E. TYPE CR2940 PUSHBUTTON
MOMENTARY CONTACTS

COMPUTER (E-301, SH 60) MA201
2C664
30 15-8
2C664

ALARM (E-323, SH 21) 2CGS1-08A (15-8)

2C692 AAA-2
T2 — H9X-29700A (SH.9) — M2
T2 — H9X-29700B (SH.12) — M2
2C692 AAA-1

NOTES:

1. FOR STANDARD SYMBOLS FOR ELECTRICAL DIAGRAMS SEE DWG 8856-E-42.
2. FOR START UP NUMBERS OF INDIVIDUAL VALVES REFER TO INSTRUMENT INDEX J-700.
3. FOR EXCESS FLOW CHECK VALVE DETAILS REFER TO V/P 8856-J-92.
4. CONTACTS TO BE WIRED OUT TO A COMMON TERMINAL POINT LOCATED IN A NON-DIVISIONALIZED SECTION OF PANEL 2C692.

UNCONTROLLED DOCUMENT FOR REFERENCE ONLY

Docket # 50-387
Control # 8803220117-36
Date 3/18/88 of Document:
REGULATORY DOCKET FILE

2C692 GG-70 — DIV I 120V INST AC AT 21216 — 2C692 GG-69 — 2C692 GG-71 — FU-A 15A

FU-9 5A | FU-11 5A | FU-13 5A | 555 E-171 SH.10
E-178 SH.9 | E-178 SH.10 | E-178 SH.11

2Y216 DIV I 120V INST AC BKR #10

FOR CABLE ROUTING SEE DWG # E-64 SH 25

2C692 MISC. SYSTEM RECORDING PNL

F/C-EK

FU-1 5A | FU-3 5A | FU-5 5A | FU-7 5A
E-178 SH.9 | E-178 SH.9 | E-178 SH.10 | E-178 SH.11

120V 60HZ — 312VA POWER SUPPLY — 24V DC

DIV I POWER DISTRIBUTION [I]
SCHEME No. 2Q4107

2C692 FF-73 — DIV II 120V INST AC AT 21226 — 2C692 FF-72 — 2C692 FF-74 — FU-B 15A

FU-10 5A | FU-12 5A | FU-14 5A | 555 E-171 SH.11
E-178 SH.12 | E-178 SH.13 | E-178 SH.14

2Y226 DIV II 120V INST AC BKR #13

FOR CABLE ROUTING SEE DWG # E-64 SH 25

2C692 MISC. SYSTEM RECORDING PNL

F/C-FK

FU-2 5A | FU-4 5A | FU-6 5A | FU-8 5A
E-178 SH.12 | E-178 SH.12 | E-178 SH.13 | E-178 SH.14

120V 60HZ — 312VA POWER SUPPLY — 24V DC

DIV II POWER DISTRIBUTION [II]
SCHEME No. 2Q4108

REFERENCE DWG'S.	
BECHTEL NO.	PL. NO.
E-42	A-107191
J-157	B-103447
J-700	A-103813
V/P J-92	FF-104920
E-171	D-107320
J-656	B-103788

5	7/8/87	INCORP. FCR E-7663	NG	TW	JL	
4	3/11/86	INCORP FCR E-7478	JL	MK	JL	
3	6/4/85	ADDED XV-24201 & HS-24201 (PER DCP 780)	JL	EK	JL	
2	11/12/82	REV. TO INCORP. FCR E-11464	NG	TW	JL	
1	11/4/82	ISSUED FOR CONSTRUCTION	JL	JL	JL	
NO.	DATE	REVISIONS	BY	CHK	DESIGN SUPV.	ENG'R MGR. / APP'S

SCALE NONE | DESIGNED A.VAUSE | DRAWN G.HONG | ENGR

PENNSYLVANIA POWER & LIGHT COMPANY
ALLENTOWN, PENNSYLVANIA
SUSQUEHANNA STEAM ELECTRIC STATION - UNIT 1, UNIT 2

BECHTEL - SAN FRANCISCO

BLOCK DIAGRAM
EXCESS FLOW CHECK VALVES
UNIT 2

JOB No.	DRAWING No.	REV.
8856	E-178 SH 8	9

D-107327 SH 8

PRC APERTURE CARD

EDWARD K. KANG — REGISTERED ENGINEER — 17538-E

2Q701 EXCESS FLOW CHECK VALVES N

24X

I certify that the microfilmed image contained on this microform were made in the normal and regular course of business. This is a true, full, correct and complete reproduction and replacement for and/or in lieu of original documents made by the Company in the course of its business.
JACINTO — Camera Operator — 12/01/87 — Camera Type MRG I

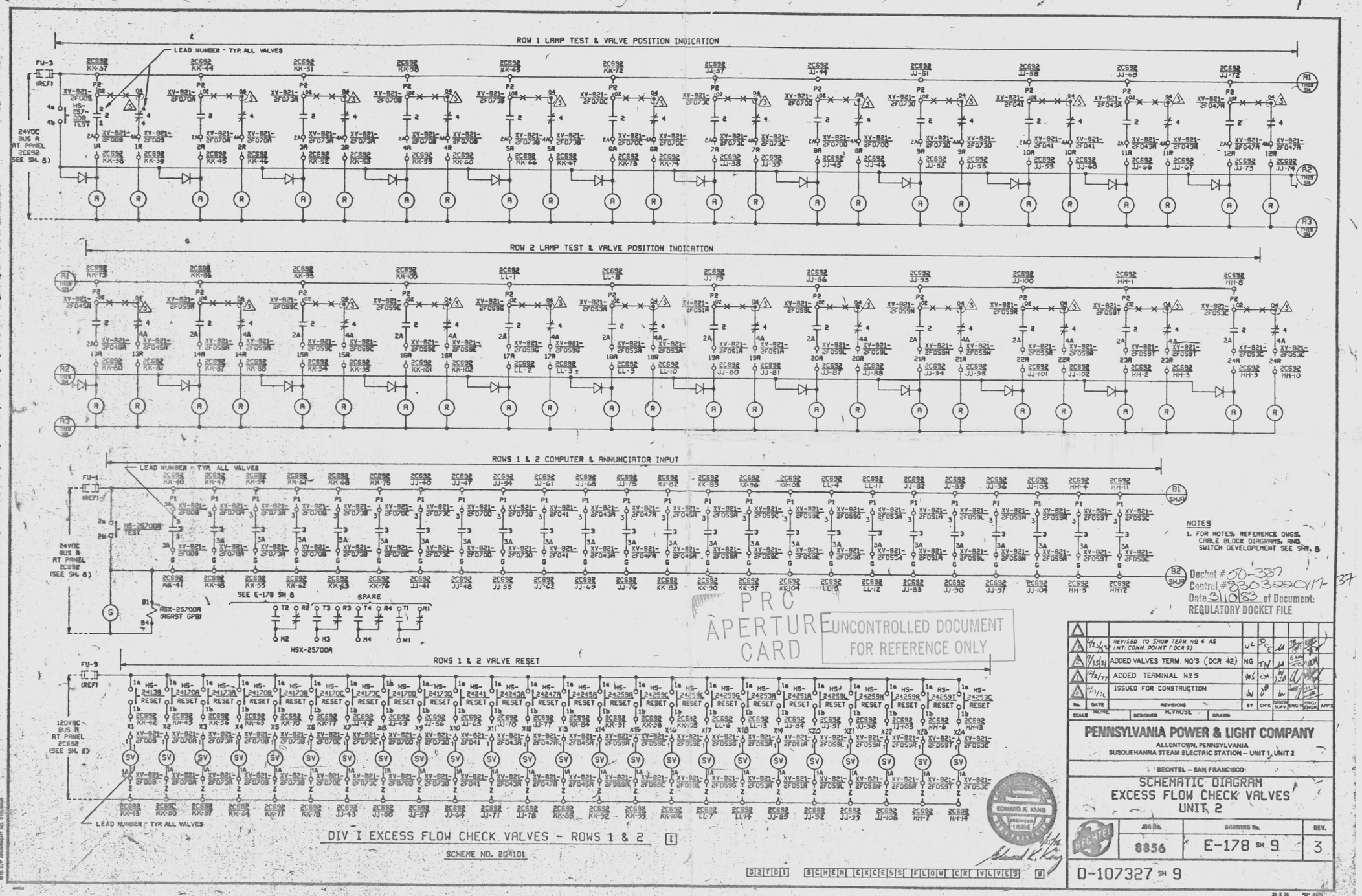

DIV I EXCESS FLOW CHECK VALVES - ROWS 1 & 2 [I]

SCHEME NO. 2Q4101

NOTES

1. FOR NOTES, REFERENCE DWGS, CABLE BLOCK DIAGRAMS, AND SWITCH DEVELOPEMENT SEE SHT. 8

Docket # 50-387
Control # 8303220117-37
Date 3/10/83 of Document:
REGULATORY DOCKET FILE

PRC APERTURE CARD

UNCONTROLLED DOCUMENT FOR REFERENCE ONLY

No.	DATE	REVISIONS	BY	CHK	DESIGN SUPV	ENG	PROJ ENGR	APP'D
3	4/23/82	REVISED TO SHOW TERM. NO 4 AS INT. CONN. POINT (DCR 9)	UL	PCE				
2	9/25/81	ADDED VALVES TERM. NO'S (DCR 42)	NG	TN				
1	12/2/77	ADDED TERMINAL NO'S	JS	CM				
0	4/13/76	ISSUED FOR CONSTRUCTION						

SCALE NONE DESIGNED H.VHUSE DRAWN

PENNSYLVANIA POWER & LIGHT COMPANY
ALLENTOWN, PENNSYLVANIA
SUSQUEHANNA STEAM ELECTRIC STATION – UNIT 1, UNIT 2

BECHTEL – SAN FRANCISCO

SCHEMATIC DIAGRAM
EXCESS FLOW CHECK VALVES
UNIT 2

JOB No.	DRAWING No.	REV.
8856	E-178 SH 9	3

D-107327 SH 9

G2T01 SCHEM EXCESS FLOW CK VLVES

This drawing and the design it covers are the property of BECHTEL. They are merely loaned and on the borrower's express agreement that they will not be reproduced, copied, loaned, exhibited, nor used except in the limited way and private use permitted by any written consent given by the lender to the borrower.

24X

I certify that the microfilmed image contained on this microform were made in the normal and regular course of business. This is a true, full, correct and complete reproduction and replacement for and/or in lieu of original documents generated by the Bechtel group of companies.

Signed RHEY Date 4-30-82 Camera Type MRG-1
Camera Operator

This drawing and the design it covers are the property of BECHTEL. They are issued upon agreement that they will not be Reproduced, copied, loaned, exhibited, nor used except in the limited way and purpose agreed upon and permitted by any written agreement given by the holder to the borrower.

ROW 3 LAMP TEST & VALVE POSITION INDICATION

ROW 4 LAMP TEST & INDICATION

ROWS 3 & 4 COMPUTER & ANNUNCIATOR INPUT

ROWS 3 & 4 VALVE RESET

DIV I EXCESS FLOW CHECK VALVES - ROWS 3 & 4 (II)

SCHEME NO. 204102

G2T01 SCHEM EXCESS FLOW CK VLVES (II)

NOTES

1. FOR NOTES, REFERENCE DWGS., CABLE BLOCK DIAGRAMS, AND SWITCH DEVELOPMENTS SEE SHEET 8

NO.	DATE	REVISIONS	BY	CHK	DESIGN SUPV	ENGR	PROJ ENGR	APP'D
D	4/15/86	REVISED TO INCORP FCR E-11461	MDL	RC				
C	9/9/85	INCORP. FCR E-7663	NG	TM				
B	7/1/84	INCORP. FCR E-7478	JC	HK				
A	4/23/84	ADDED XV-24201 & HS-24201 (PER DCP 780)	JC	RC				
0	7/1/83	ISSUED FOR CONSTRUCTION	MJ	DS				

SCALE: NONE | DESIGNED: M.TROSE | DRAWN:

PENNSYLVANIA POWER & LIGHT COMPANY
ALLENTOWN, PENNSYLVANIA
SUSQUEHANNA STEAM ELECTRIC STATION — UNIT 1, UNIT 2

BECHTEL — SAN FRANCISCO

SCHEMATIC DIAGRAM
EXCESS FLOW CHECK VALVES
UNIT 2

JOB No.	DRAWING No.	REV.
8856	E-178 SH 10	8

0-107327 SH 10

UNCONTROLLED DOCUMENT
FOR REFERENCE ONLY

Docket # 50-387
Control # 8810050117-38
Date 3/10/88 of Document:
REGULATORY DOCKET FILE

PRC
APERTURE
CARD

EDWARD K. KANG
PROVIDENCE
LICENSED
ENGINEER

24X

I certify that the microfilmed image contained on this microform were made in the normal and regular course of business. This is a true, full, correct and complete reproduction and replacement for and/or in lieu of original documents generated by the Bechtel group of companies.
Signature DANNY Date 12-27-83 Camera Type MRG1
Camera Operator

This drawing and the design it covers are the property of BECHTEL. They are not to be reproduced, copied, loaned, exhibited, nor used except in the manner and for the purpose for which they are issued, nor quoted or copied from in whole or in part without the written consent given by the holder to the Corporation.

ROW 5 LAMP TEST & VALVE POSITION INDICATION

ROW 6 LAMP TEST & VALVE POSITION INDICATION — SPARE

ROWS 5 & 6 COMPUTER & ANNUNCIATOR INPUT — SPARE

ROWS 5 & 6 VALVE RESET — SPARE

DIV 1 EXCESS FLOW CHECK VALVES - ROWS 5 & 6 [1]

SCHEME NO. 204103

UNCONTROLLED DOCUMENT FOR REFERENCE ONLY

PRC APERTURE CARD

NOTES
1. FOR NOTES, REFERENCE DWGS., CABLE BLOCK DIAGRAMS, AND SWITCH DEVELOPMENTS SEE SHEET 8.

NO.	DATE	REVISIONS	BY	CHK	ENGR. SUPV.	MNC. MNGR.	APP'D
4	5/11/84	INCORP. PCR E-7438	JC	MK			
3	11/24/81	REVISED TO SHOW TERM. PTS FOR VLVS CORRECTLY (DCR 9)	JC				
2	9/11/81	DELETED VLVS XV-25101B, B2 & ADDED VLVS XV-25709A XV-25728A (DCR 42)	JC	ES			
1	7/17/81	INCORP PCR E-7663	NG				
0	7/1/81	ISSUED FOR CONSTRUCTION	JV	SB			

SCALE: NONE — DESIGNED: M. KRAUSE — DRAWN

PENNSYLVANIA POWER & LIGHT COMPANY
ALLENTOWN, PENNSYLVANIA
SUSQUEHANNA STEAM ELECTRIC STATION — UNIT 1, UNIT 2

BECHTEL — SAN FRANCISCO

SCHEMATIC DIAGRAM
EXCESS FLOW CHECK VALVES
UNIT 2

JOB No.	DRAWING No.	REV.
8856	E-178 SH 11	5

D-107327 SH 11

22 IN

EDWARD K. KANG — REGISTERED ENGINEER — 17884

Docket # 50-387
Control # 8903220117-39
Date 3/10/83 of Document:
REGULATORY DOCKET FILE

D 2 7 0 1 SCHEM EXCESS FLOW CK VLVES U

24X

I certify that the microfilmed image contained on this microform were made in the normal and regular course of business. This is a true, full, correct and complete reproduction and replacement for and/or in lieu of original documents generated by the Bechtel group of companies.

Signed P. AKINS Date 10-17-82 Camera Type MRG 1
Camera Operator

D

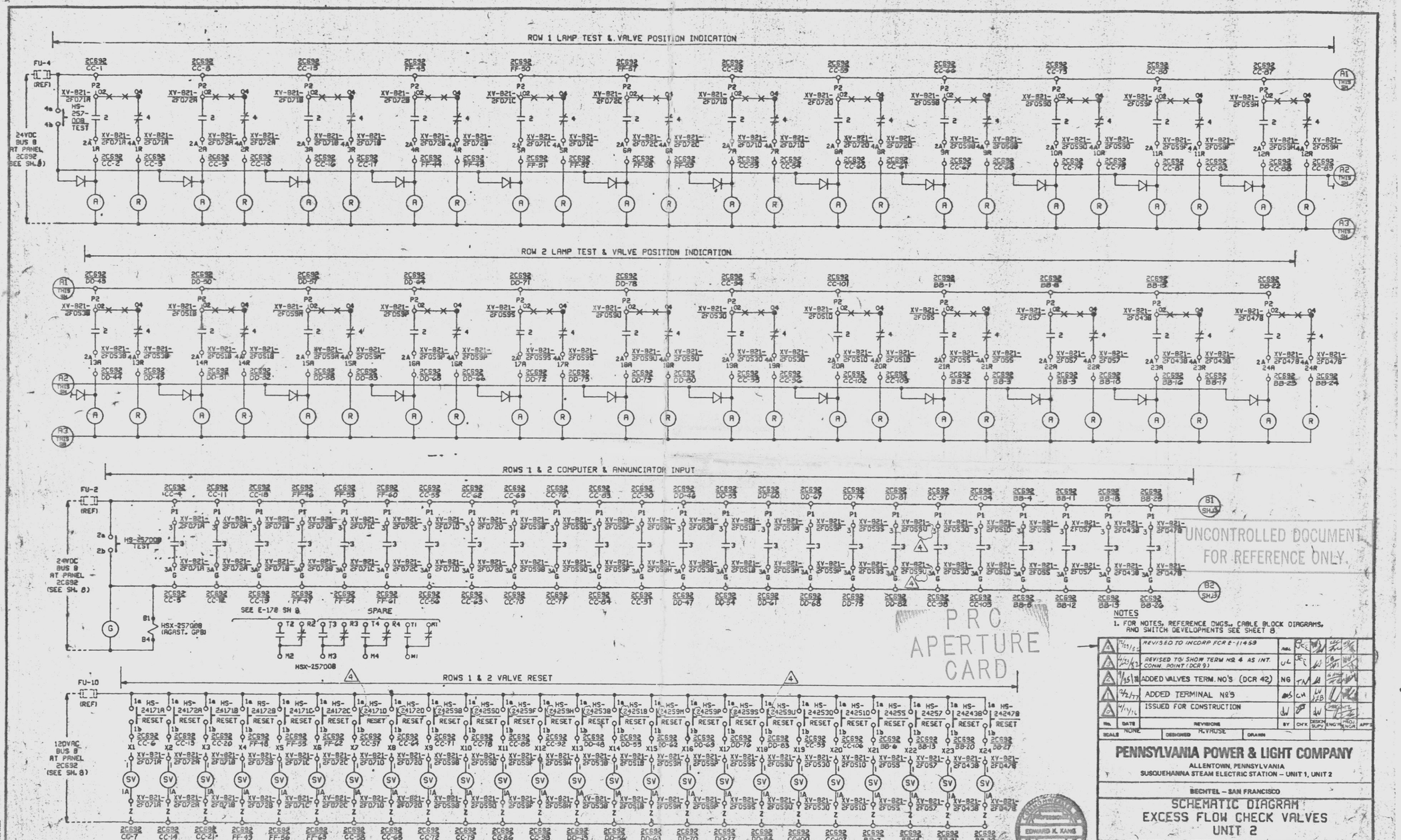

NOTES

1. FOR NOTES, REFERENCE DWGS., CABLE BLOCK DIAGRAMS, AND SWITCH DEVELOPMENTS SEE SHEET 8.

No.	DATE	REVISIONS	BY	CHK	DESIGN SUPV	ENG'G	PROJ ENGR	APP'D
4	12/23/82	REVISED TO INCORP FCR E-11459	ABL	JCE				
3	4/23/82	REVISED TO SHOW TERM NO. 4 AS INT. CONN. POINT (DCR 9)	UL	JCE				
2	9/25/81	ADDED VALVES TERM. NO'S (DCR 42)	NG	TN				
1	2/2/77	ADDED TERMINAL NO'S		CH				
0	4/11/76	ISSUED FOR CONSTRUCTION						

SCALE NONE DESIGNED R.VRUSE DRAWN

PENNSYLVANIA POWER & LIGHT COMPANY
ALLENTOWN, PENNSYLVANIA
SUSQUEHANNA STEAM ELECTRIC STATION – UNIT 1, UNIT 2

BECHTEL – SAN FRANCISCO

SCHEMATIC DIAGRAM
EXCESS FLOW CHECK VALVES
UNIT 2

JOB No.	DRAWING No.	REV.
8856	E-178 SH 12	4

D-107327 SH 12

D

UNCONTROLLED DOCUMENT FOR REFERENCE ONLY.

PRC APERTURE CARD

Docket # 50-387
Control # 8303220117-40
Date 3/10/83 of Document:
REGULATORY DOCKET FILE

EDWARD K. KANG

This drawing and the design it covers are the property of BECHTEL. They are merely loaned and on the borrower's express agreement that they will not be reproduced, copied, loaned, exhibited, nor used except in the limited way and private use permitted by any written consent given by the lender to the borrower.

24X

I certify that the microfilmed image contained on this microform were made in the normal and regular course of business. This is a true, full, correct and complete reproduction and replacement for and/or in lieu of original documents generated by the Bechtel group of companies

Signed DANNY Date 12-27-82 Camera Type MRG1
Camera Operator

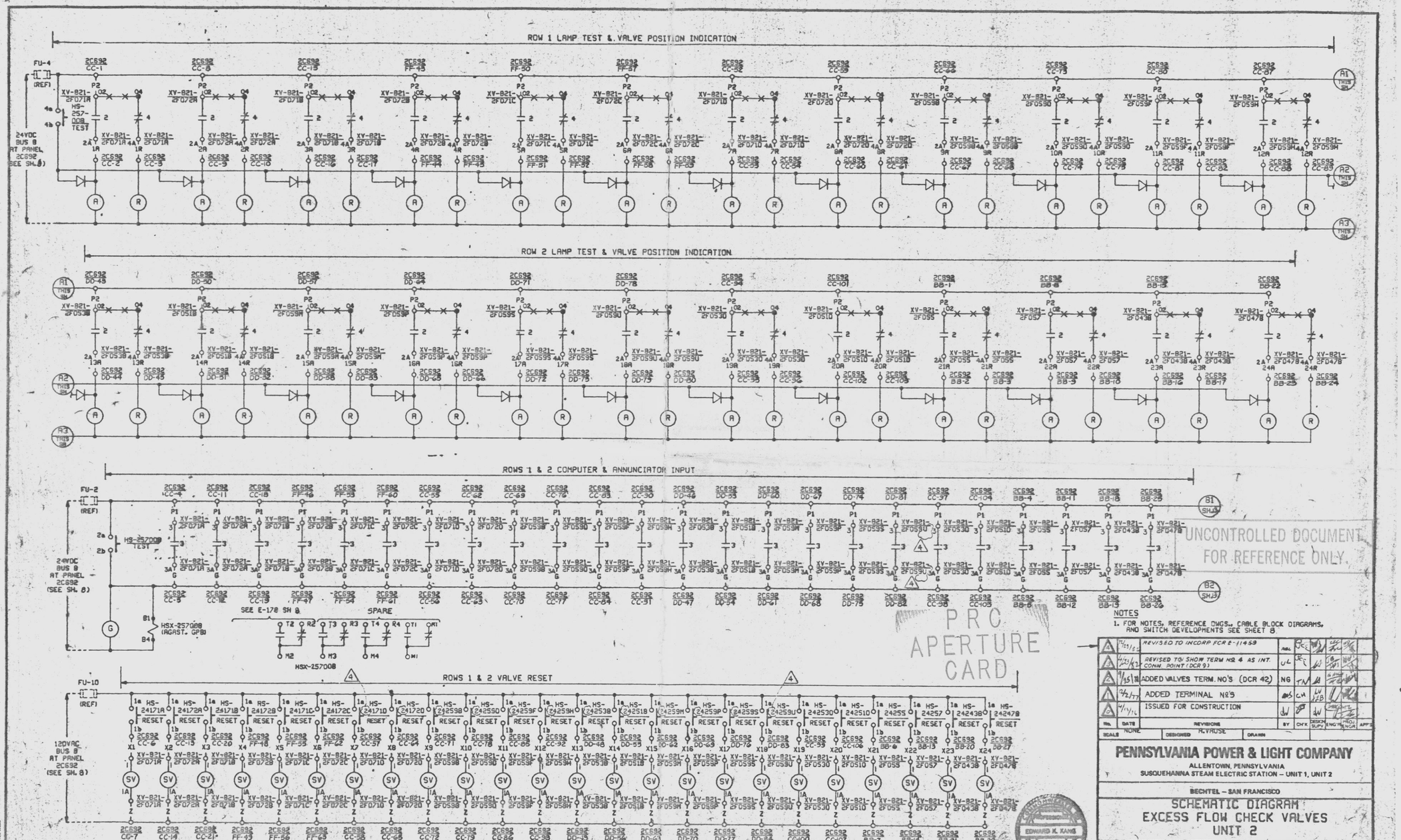

DIV II EXCESS FLOW CHECK VALVES - ROWS 1 & 2

SCHEME NO. 2Q4104

NOTES

1. FOR NOTES, REFERENCE DWGS., CABLE BLOCK DIAGRAMS, AND SWITCH DEVELOPMENTS SEE SHEET 8.

No.	DATE	REVISIONS	BY	CHK	DESIGN SUPV	ENG'G	PROJ ENGR	APP'S
4	12/23/82	REVISED TO INCORP FCR E-11459	ABL	JCE				
3	4/23/82	REVISED TO SHOW TERM NO. 4 AS INT. CONN. POINT (DCR 9)	UL	JCE				
2	9/25/81	ADDED VALVES TERM. NO'S (DCR 42)	NG	TN				
1	2/2/77	ADDED TERMINAL NO'S		CH				
0	4/11/76	ISSUED FOR CONSTRUCTION						

SCALE NONE DESIGNED R.VRUSE DRAWN

PENNSYLVANIA POWER & LIGHT COMPANY

ALLENTOWN, PENNSYLVANIA

SUSQUEHANNA STEAM ELECTRIC STATION – UNIT 1, UNIT 2

BECHTEL – SAN FRANCISCO

SCHEMATIC DIAGRAM
EXCESS FLOW CHECK VALVES
UNIT 2

JOB No.	DRAWING No.	REV.
8856	E-178 SH 12	4

D-107327 SH 12

D

UNCONTROLLED DOCUMENT FOR REFERENCE ONLY.

PRC APERTURE CARD

Docket # 50-387
Control # 8303220117-40
Date 3/10/83 of Document:
REGULATORY DOCKET FILE

G2T01 SCHEM EXCESS FLOW CK VLVES W

This drawing and the design it covers are the property of BECHTEL. They are merely loaned and on the borrower's express agreement that they will not be reproduced, copied, loaned, exhibited, nor used except in the limited way and private use permitted by any written consent given by the lender to the borrower.

24X

I certify that the microfilmed image contained on this microform were made in the normal and regular course of business. This is a true, full, correct and complete reproduction and replacement for and/or in lieu of original documents generated by the Bechtel group of companies

Signed DANNY Date 12-27-82 Camera Type MRG1
Camera Operator

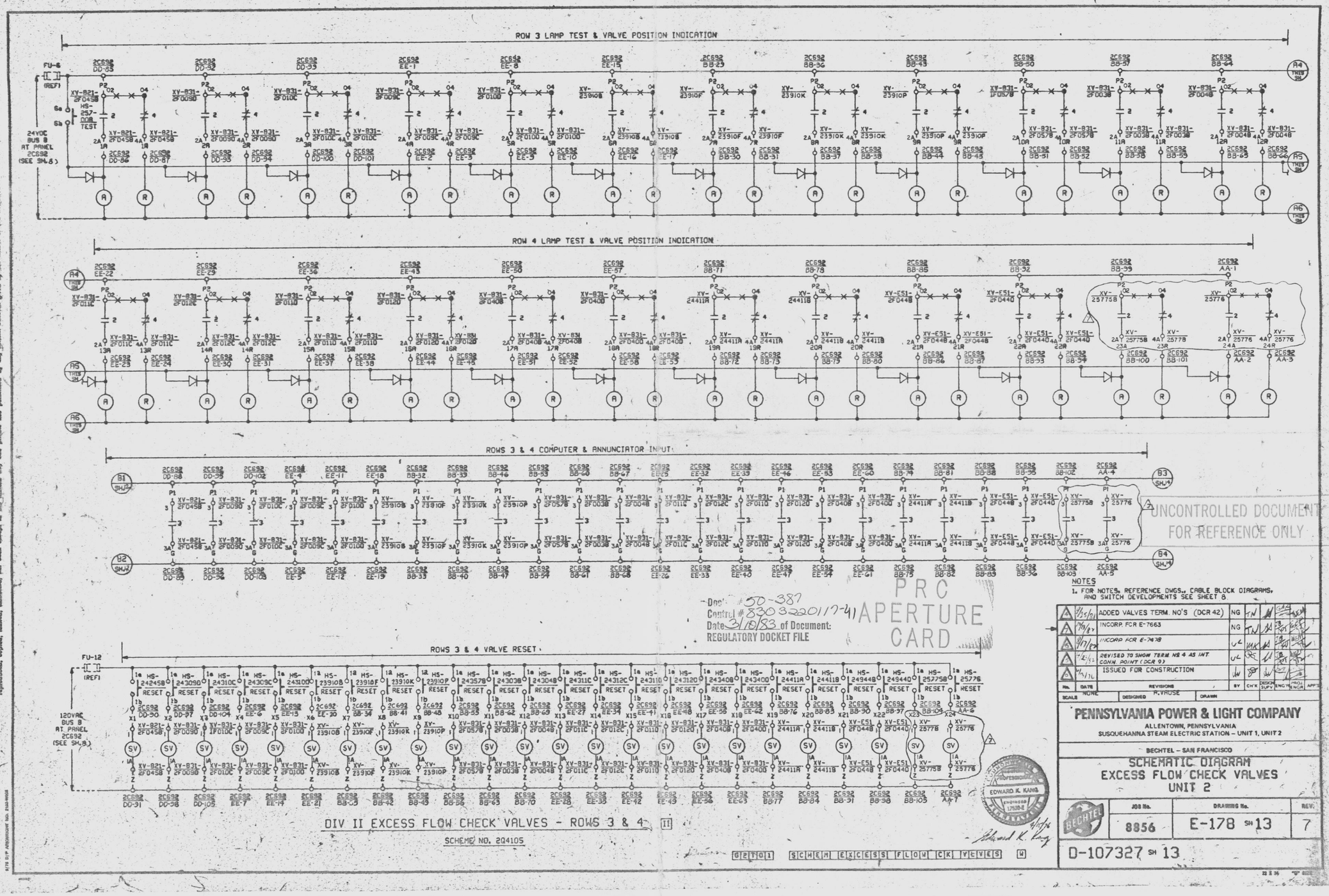

NOTES

1. FOR NOTES, REFERENCE DWGS., CABLE BLOCK DIAGRAMS, AND SWITCH DEVELOPMENTS SEE SHEET 8.

No.	DATE	REVISIONS	BY	CH'K	DESIGN SUPV	ENG'R	PROJ ENGR	APP'D
4	9/25/81	ADDED VALVES TERM. NO'S (DCR 42)	NG	TN				
3	7/13/87	INCORP. FOR E-7663	NG	TN				
2	8/17/87	INCORP FOR E-7478	UL					
1	7/23/82	REVISED TO SHOW TERM. NO 4 AS INT. CONN. POINT (DCR 9)	UL					
0	4/3/76	ISSUED FOR CONSTRUCTION						

SCALE NONE DESIGNED R.VRUSE DRAWN

PENNSYLVANIA POWER & LIGHT COMPANY
ALLENTOWN, PENNSYLVANIA
SUSQUEHANNA STEAM ELECTRIC STATION – UNIT 1, UNIT 2

BECHTEL – SAN FRANCISCO

SCHEMATIC DIAGRAM
EXCESS FLOW CHECK VALVES
UNIT 2

JOB No.	DRAWING No.	REV.
8856	E-178 SH 13	7

D-107327 SH 13

D

UNCONTROLLED DOCUMENT FOR REFERENCE ONLY

Doc# 50-387
Control # 8303220117-41
Date 3/10/83 of Document:
REGULATORY DOCKET FILE

PRC APERTURE CARD

This drawing and the design it covers are the property of BECHTEL. They are merely loaned and on the borrower's express agreement that they will not be reproduced, copied, loaned, exhibited, nor used except in the limited way and private use permitted by any written consent given by the lender to the borrower.

24X

I certify that the microfilmed image contained on this microform were made in the normal and regular course of business. This is a true, full, correct and complete reproduction and replacement for and/or in lieu of original documents generated by the Bechtel group of companies.

Signed P. AKINS Date 10-17-82 Camera Type MRG 1
Camera Operator

This drawing and the design it covers are the property of BECHTEL. They are issued in confidence on the express agreement that they will not be reproduced, copied, loaned, exhibited, nor used except in the limited way and private use permitted by any written consent given by the owner to the borrower.

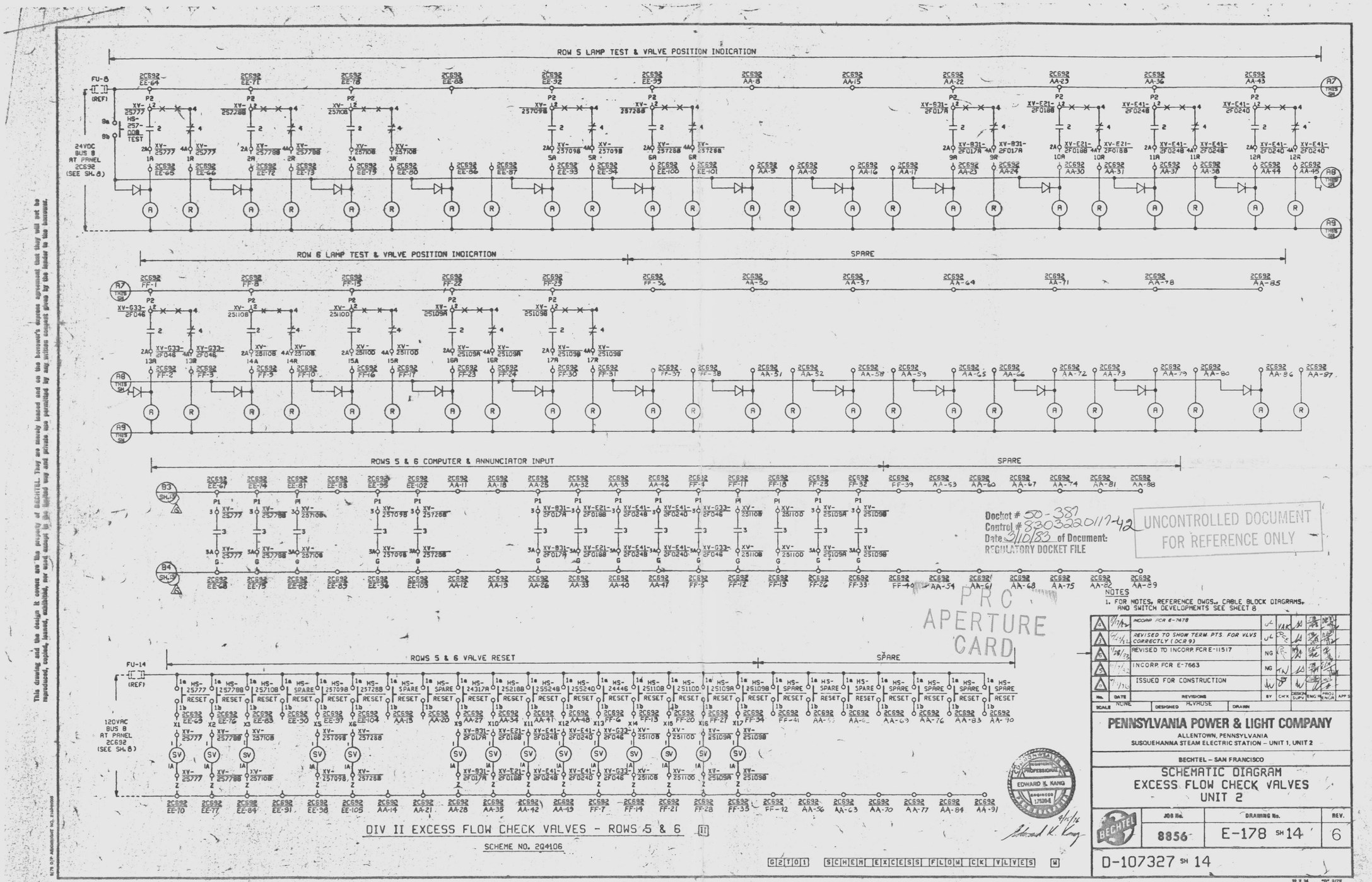

DIV II EXCESS FLOW CHECK VALVES - ROWS 5 & 6 [II]

SCHEME NO. 204106

G2T01 SCHEM EXCESS FLOW CK VLVES [M]

Docket # 50-387
Control # 8303220117-42
Date 3/10/83 of Document:
REGULATORY DOCKET FILE

UNCONTROLLED DOCUMENT FOR REFERENCE ONLY

PRC APERTURE CARD

NOTES
1. FOR NOTES, REFERENCE DWGS., CABLE BLOCK DIAGRAMS, AND SWITCH DEVELOPMENTS SEE SHEET 8

No.	DATE	REVISIONS	BY	CHK	ENGR SUPV	ENG MGR	PROJ ENGR	APP'D
5	9/1/82	INCORP FCR E-7478	JC	VAK				
4	7/1/82	REVISED TO SHOW TERM. PTS. FOR VLVS CORRECTLY (DCR 9)	JC					
3	6/28/82	REVISED TO INCORP. FCR E-11517	NG					
2	7/1/81	INCORP. FCR E-7663	NG					
1	7/1/80	ISSUED FOR CONSTRUCTION						

SCALE NONE | DESIGNED HLVHOUSE | DRAWN

PENNSYLVANIA POWER & LIGHT COMPANY
ALLENTOWN, PENNSYLVANIA
SUSQUEHANNA STEAM ELECTRIC STATION – UNIT 1, UNIT 2

BECHTEL – SAN FRANCISCO

SCHEMATIC DIAGRAM EXCESS FLOW CHECK VALVES UNIT 2

JOB No.	DRAWING No.	REV.
8856	E-178 SH 14	6

D-107327 SH 14

22 X 34 "D" SIZE

24X

I certify that the microfilmed image contained on this microform were made in the normal and regular course of business. This is a true, full, correct and complete reproduction and replacement for and/or in lieu of original documents generated by the Bechtel group of companies.

Signed DANNY Date 2-1-83 Camera Type MRC1
Camera Operator

This drawing and the design it covers are the property of BECHTEL. They are merely loaned and on the borrower's express agreement that they will not be reproduced, copied, loaned, exhibited, nor used except in the limited way and private use permitted by any written consent given by the lender to the borrower.

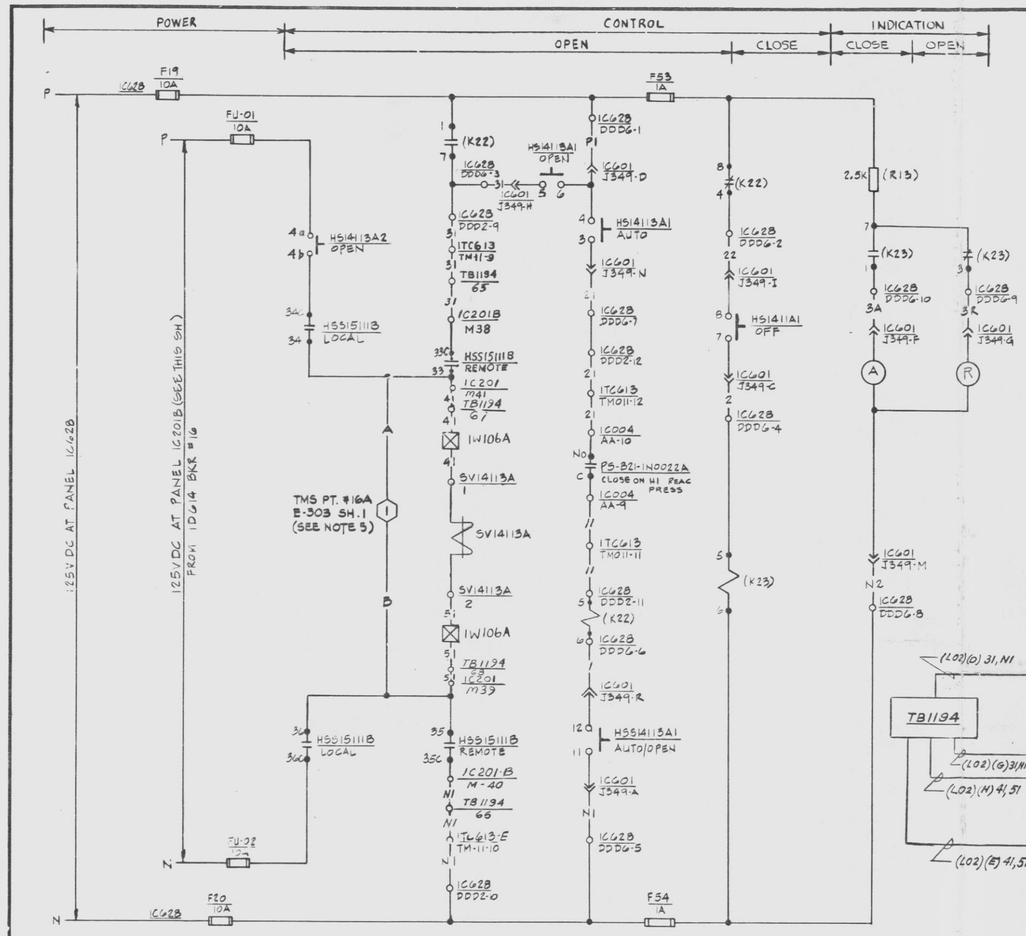

BLOCK NO.	CONTACT NO.	POSITION OFF	POSITION AUTO	POSITION OPEN	DRAWING NO.
TOP	1-2, 3-4	X			E-324 SH 3
			X	X	THIS SHEET
BTM	5-6, 7-8			X	THIS SHEET
		X	X		THIS SHEET
TOP	9-10, 11-12	X			SPARE
			X	X	THIS SHEET
BTM	13-14, 15-16			X	SPARE
		X	X		SPARE

125 VDC POWER SUPPLY TO 1C201 [I]

NOTE

1. FOR STANDARD SYMBOLS FOR ELECTRICAL DIAGRAMS SEE E-42.
2. FOR SWITCH DEVELOPMENT OF REMOTE SHUTDOWN PANEL (1C201) SWITCHES SEE DWG E-149 SH
3. NOS. IN PARENTHESIS ARE GE DEVICE NOS.
4. DESIGN BASED ON GE/APED ELEMENTARY 791E403WJ (V/P 8856-MI-B21-129)
5. TRANSIENT MONITORING SYSTEM SPECIAL CIRCUIT IS ENERGIZED WHENEVER THE SOLENOID IS ACTUATED WHICH RESULTS IN 0-10V SIGNAL FOR START REC.
6. FOR GE FCD, SEE V/P MI-B21-92(4) (GE DWG NO. 761E279AE SH4)

UNCONTROLLED DOCUMENT FOR REFERENCE ONLY

PRC APERTURE CARD

SAFETY RELIEF VALVE PSV-B21-1F013A
SCHEME NO. 1Q4201
(REF SH. 6)

SCHEME NO	FACILITY CODE	PEN. NO.	VALVE NO.	VALVE DESCRIPTION	SOLENOID NO	CONTROL SWITCH NO.	CONTROL SWITCH LOCATION	PRESSURE SWITCH NO.	PRESSURE SWITCH LOC	PRESSURE SWITCH TERM. NO.	FUSE NO. IN PANEL 1C628	1C201 TERMINATIONS	1C201 MATCH NO.	1C201 TMS PT. NO.	TRANSFER SWITCH NO.	TRANSFER SWITCH CONTACT	TRANSFER SWITCH LOCATION
1Q4201	EK	1W106A	PSV-B21-1F013A	SAFETY RELIEF F013A	SV-14113A	HS-14113A1 HS-14113A2	1C601-19C 1C201	PS-B21-1NO22A	TB-1C004-A1	AA-9 AA-10	F61M F620 F633 F654	M38 M39 M40 M41	1	16A	HSS-15111B	3334,35,36	1C201-B
1Q4202	EK	1W106A	PSV-B21-1F013B	SAFETY RELIEF F013B	SV-14113B	HS-14113B1 HS-14113B2	1C601-19C 1C201	PS-B21-1NO22B	TB-1C004-A1	AA-11 AA-12	F621 F637 F639 F646	N19 N21 N22 N23	2	16B	HSS-15112A	13,14,15,16	1C201-B
1Q4203	EK	1W106A	PSV-B21-1F013C	SAFETY RELIEF F013C	SV-14113C	HS-14113C1 HS-14113C2	1C601-19C 1C201	PS-B21-1NO22C	TB-1C004-A1	AA-13 AA-14	F623 F634 F645 F660	P28 P30 P31 P29	3	16C	HSS-15112B	13,14,15,16	1C201-B

F/C-EK

AUX RELAY COIL NO	AUX RELAY CONTACT NO.	AUX RELAY COIL NO	AUX RELAY CONTACT NO	FITS ITCC013 SECT. E TERMINATION	FITS LINE CODE	FITS CABLE NO.	1C628 SECT. A	SITS 1C628 SECT. A TERMINATION	SITS LINE CODE	SITS CABLE NO.	SITS 1C601-19C TERM. NO.'S	TB1194 TERM. PTS
5-6 (K23)	7-1, 3	5-6 (K22)	4-8, 1-7	TM-11 -9, TM-11 -10, TM-11 -11, TM-11 -12	G4 G5	3128/B21C-005	DDD2-11, DDD2-12, DDD2-9, DDD2-10	DDD6-1, DDD6-2, DDD6-3, DDD6-4, DDD6-9, DDD6-10, DDD6-5, DDD6-6, DDD6-7, DDD6-8	93 155	2801/B21C-015	J349: R C N I H A D F G M / R C N I H A D U V W	65 66 67 68
5-6 (K28)	7-1, 3	5-6 (K29)	4-8, 1-7	TM-10 -5, TM-10 -6, TM-10 -7, TM-10 -8	J3 J4	3128/B21C-004	DDD1-7, DDD1-8, DDD1-5, DDD1-6	BBB2-3, BBB2-4, BBB2-10, BBB2-11, BBB4-8, BBB4-9, BBB2-12, BBB2-13, BBB4-14, BBB4-7	72 158	2801/B21C-011 2801/B21C-013	J226: U W L G F T M G M N / J229: R C N I H A D U V W	69 70 71 72
5-6 (K35)	7-1, 3	8-6 (K34)	4-8, 1-7	TM-09 -5, TM-09 -16, TM-09 -01, TM-09 -02	B2 B3	3128/B21C-004 3128/B21C-003	CCC1-1, CCC1-2, CCC1-15, CCC1-16	AAA9-1, AAA9-2, AAA9-3, AAA9-4, BBB3-12, BBB3-13, AAA9-5, AAA9-6, AAA9-11, BBB3-11	81 161	2801/B21C-009 2801/B21C-012	J224: R C N I H A D U V W / J222: R C N I H A D U V W	21 22 23 24

I certify that the microfilmed image contained on this microform were made in the normal and regular course of business. This is a true, full, correct and complete reproduction and replacement for and/or in lieu of original documents generated by the Bechtel group of companies.
Signed JACINTO Date 6-17-82 Camera Type MRC I
Camera Operator

24X

Control # 8305200117-43
Date 3/10/83 of Document:
REGULATORY DOCKET FILE

REFERENCE DWG'S. BECHTEL NO.	REFERENCE DWG'S. PL. NO.
E-42	A-107191
E-64	D-107213
MI-B21-129	FF1193510
E-149	D-107298
E-324	D-107477
B-303	D-107452

NO.	DATE	REVISIONS	BY	CHK'D	DESIGN SUPV.	ENG'R	PROJ ENG'R	APP'D
3	1/22/80	REVISED FOR TMS (BFI. #901)	PE	DLH				
2	6/19/79	ISSUED "AS BUILT" INCORP. FCN-E-3252, DCR 42	CJN	MKG	M	/		
1	3/9/82	ECN 1 (DCP #3041 REV 1) INCORP ON REV 7 ADDED 2B1193 TO AGREE W E-64 SH 11 REV 13 (DCR 442)	PE	RAP DLH		/		
0	4/1/82	REV 0 (DCP #3041 REV 2, DCP #3241 REV 1, SCN ENGR-E-4636, FCN-E-2021 DCR 2)	MS	MK DLH	TC	/		
4	11/20	INCORP FOR E-2480 REV PER DFR 1922 & REV NOTE 3 AS BUILT (USR #2)	JCJ	PSH	AA M.T.	SB		
0	8/1/75	ISSUED FOR CONSTRUCTION		KH M.T.	SB	RJ		

SCALE NONE | DESIGNED Y. SCHEMBRI | DRAWN W Y. CHAN

PENNSYLVANIA POWER & LIGHT COMPANY
ALLENTOWN, PENNSYLVANIA
SUSQUEHANNA STEAM ELECTRIC STATION – UNIT 1, UNIT 2

BECHTEL – SAN FRANCISCO

SCHEMATIC DIAGRAM
ADS SAFETY RELIEF VALVES
UNIT 1

JOB No.	DRAWING No.	REV.
8856	E-180 SH 1	9

D-107329 SH. 1

G T O I | S C H E M A D S | S A F E T Y | V A L V E S

22 x 36 "D" SIZE

D

This drawing and the design it covers are the property of BECHTEL. They are merely loaned and on the borrower's express agreement that they will not be reproduced, copied, loaned, exhibited, nor used except in the limited way and private use permitted by any written consent given by the lender to the borrower.

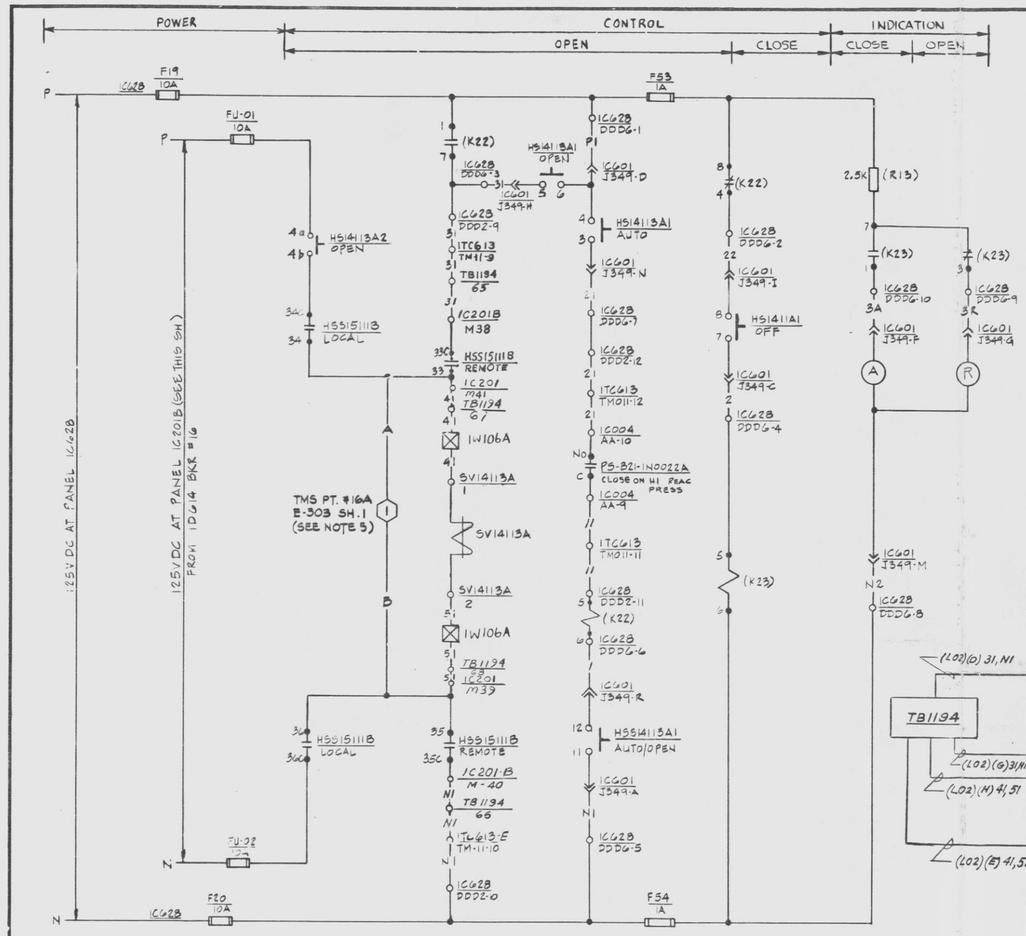

BLOCK NO.	CONTACT NO.	POSITION OFF	POSITION AUTO	POSITION OPEN	DRAWING NO.
TOP	1-2, 3-4	X			E-324 SH 3
			X	X	THIS SHEET
BTM	5-6, 7-8			X	THIS SHEET
		X	X		THIS SHEET
TOP	9-10, 11-12	X			SPARE
			X	X	THIS SHEET
BTM	13-14, 15-16			X	SPARE
		X	X		SPARE

125 VDC POWER SUPPLY TO 1C201 [I]

NOTE

1. FOR STANDARD SYMBOLS FOR ELECTRICAL DIAGRAMS SEE E-42.
2. FOR SWITCH DEVELOPMENT OF REMOTE SHUTDOWN PANEL (1C201) SWITCHES SEE DWG E-149 SH
3. NOS. IN PARENTHESIS ARE GE DEVICE NOS.
4. DESIGN BASED ON GE/APED ELEMENTARY 791E403WJ (V/P 8856-MI-B21-129)
5. TRANSIENT MONITORING SYSTEM SPECIAL CIRCUIT IS ENERGIZED WHENEVER THE SOLENOID IS ACTUATED WHICH RESULTS IN 0-10V SIGNAL FOR START REC.
6. FOR GE FCD, SEE V/P MI-B21-92(4) (GE DWG NO. 761E279AE SH4)

UNCONTROLLED DOCUMENT FOR REFERENCE ONLY

PRC APERTURE CARD

SAFETY RELIEF VALVE PSV-B21-1F013A
SCHEME NO. 1Q4201
(REF SH. 6)

SCHEME NO	FACILITY CODE	PEN. NO.	VALVE NO.	VALVE DESCRIPTION	SOLENOID NO	CONTROL SWITCH NO.	CONTROL SWITCH LOCATION	PRESSURE SWITCH NO.	PRESSURE SWITCH LOC	PRESSURE SWITCH TERM. NO.	FUSE NO. IN PANEL 1C628	1C201 TERMINATIONS	1C201 MATCH NO.	1C201 TMS PT. NO.	TRANSFER SWITCH NO.	TRANSFER SWITCH CONTACT	TRANSFER SWITCH LOCATION
1Q4201	EK	1W106A	PSV-B21-1F013A	SAFETY RELIEF F013A	SV-14113A	HS-14113A1 HS-14113A2	1C601-19C 1C201	PS-B21-1NO22A	TB-1C004-A1	AA-9 AA-10	F61M F620 F633 F654	M38 M39 M40 M41	1	16A	HSS-15111B	3334,35,36	1C201-B
1Q4202	EK	1W106A	PSV-B21-1F013B	SAFETY RELIEF F013B	SV-14113B	HS-14113B1 HS-14113B2	1C601-19C 1C201	PS-B21-1NO22B	TB-1C004-A1	AA-11 AA-12	F621 F637 F639 F646	N19 N21 N22 N23	2	16B	HSS-15112A	13,14,15,16	1C201-B
1Q4203	EK	1W106A	PSV-B21-1F013C	SAFETY RELIEF F013C	SV-14113C	HS-14113C1 HS-14113C2	1C601-19C 1C201	PS-B21-1NO22C	TB-1C004-A1	AA-13 AA-14	F623 F634 F645 F660	P28 P30 P31 P29	3	16C	HSS-15112B	13,14,15,16	1C201-B

F/C-EK

AUX RELAY COIL NO	AUX RELAY CONTACT NO.	AUX RELAY COIL NO	AUX RELAY CONTACT NO	FITS ITCC013 SECT. E TERMINATION	FITS LINE CODE	FITS CABLE NO.	1C628 SECT. A	SITS 1C628 SECT. A TERMINATION	SITS LINE CODE	SITS CABLE NO.	SITS 1C601-19C TERM. NO.'S	TB1194 TERM. PTS
5-6 (K23)	7-1, 3	5-6 (K22)	4-8, 1-7	TM-11 -9, TM-11 -10, TM-11 -11, TM-11 -12	G4 G5	3128/B21C-005	DDD2-11, DDD2-12, DDD2-9, DDD2-10	DDD6-1, DDD6-2, DDD6-3, DDD6-4, DDD6-9, DDD6-10, DDD6-5, DDD6-6, DDD6-7, DDD6-8	93 155	2801/B21C-015	J349: R C N I H A D F G M / R C N I H A D U V W	65 66 67 68
5-6 (K28)	7-1, 3	5-6 (K29)	4-8, 1-7	TM-10 -5, TM-10 -6, TM-10 -7, TM-10 -8	J3 J4	3128/B21C-004	DDD1-7, DDD1-8, DDD1-5, DDD1-6	BBB2-3, BBB2-4, BBB2-10, BBB2-11, BBB4-8, BBB4-9, BBB2-12, BBB2-13, BBB4-14, BBB4-7	72 158	2801/B21C-011 2801/B21C-013	J226: U W L G F T M G M N / J229: R C N I H A D U V W	69 70 71 72
5-6 (K35)	7-1, 3	8-6 (K34)	4-8, 1-7	TM-09 -5, TM-09 -16, TM-09 -01, TM-09 -02	B2 B3	3128/B21C-004 3128/B21C-003	CCC1-1, CCC1-2, CCC1-15, CCC1-16	AAA9-1, AAA9-2, AAA9-3, AAA9-4, BBB3-12, BBB3-13, AAA9-5, AAA9-6, AAA9-11, BBB3-11	81 161	2801/B21C-009 2801/B21C-012	J224: R C N I H A D U V W / J222: R C N I H A D U V W	21 22 23 24

I certify that the microfilmed image contained on this microform were made in the normal and regular course of business. This is a true, full, correct and complete reproduction and replacement for and/or in lieu of original documents generated by the Bechtel group of companies.
Signed JACINTO Date 6-17-82 Camera Type MRC I
Camera Operator

24X

Control # 8305200117-43
Date 3/10/83 of Document:
REGULATORY DOCKET FILE

REFERENCE DWG'S. BECHTEL NO.	REFERENCE DWG'S. PL. NO.
E-42	A-107191
E-64	D-107213
MI-B21-129	FF1193510
E-149	D-107298
E-324	D-107477
B-303	D-107452

NO.	DATE	REVISIONS	BY	CHK'D	DESIGN SUPV.	ENG'R	PROJ ENG'R	APP'D
3	1/22/80	REVISED FOR TMS (BFI. #901)	PE	DLH				
2	6/19/79	ISSUED "AS BUILT" INCORP. FCN-E-3252, DCR 42	CJN	MKG	M	/		
1	3/9/82	ECN 1 (DCP #3041 REV 1) INCORP ON REV 7 ADDED 2B1193 TO AGREE W E-64 SH 11 REV 13 (DCR 442)	PE	RAP DLH		/		
0	4/1/82	REV 0 (DCP #3041 REV 2, DCP #3241 REV 1, SCN ENGR-E-4636, FCN-E-2021 DCR 2)	MS	MK DLH	TC	/		
4	11/20	INCORP FOR E-2480 REV PER DFR 1922 & REV NOTE 3 AS BUILT (USR #2)	JCJ	PSH	AA M.T.	SB		
0	8/1/75	ISSUED FOR CONSTRUCTION		KH M.T.	SB	RJ		

SCALE NONE | DESIGNED Y. SCHEMBRI | DRAWN W Y. CHAN

PENNSYLVANIA POWER & LIGHT COMPANY
ALLENTOWN, PENNSYLVANIA
SUSQUEHANNA STEAM ELECTRIC STATION – UNIT 1, UNIT 2

BECHTEL – SAN FRANCISCO

SCHEMATIC DIAGRAM
ADS SAFETY RELIEF VALVES
UNIT 1

JOB No.	DRAWING No.	REV.
8856	E-180 SH 1	9

D-107329 SH. 1

G T O I | S C H E M A D S | S A F E T Y | V A L V E S

22 x 36 "D" SIZE

D

This drawing and the design it covers are the property of BECHTEL. They are merely loaned and on the borrower's express agreement that they will not be reproduced, copied, loaned, exhibited, nor used except in the limited way and private use permitted by any written consent given by the lender to the borrower.

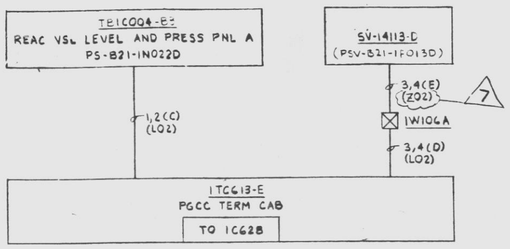

F/C-EK

SAFETY RELIEF VALVE SV-14113D3

SCHEME Nº 1Q4204

REF SH 6 (SCHEMES 1Q4204-9)
REF SH 7 (SCHEMES 1Q4210-16)

DIV NO	SCHEME Nº	VALVE Nº	VALVE DESCRIPTION	VALVE LOC.	PRESSURE SWITCH Nº	PRESSURE SWITCH LOC	PENETRATION Nº	PGCC TERM CAB No
I	1Q4204	PSV-B21-1F013D	SAFETY RELIEF VALVE	SV-14113D	PS-B21-1N022D	TB-1C004-B3	1W106A	1TC613-E
I	1Q4205	PSV-B21-1F013E	SAFETY RELIEF VALVE	SV-14113E	PS-B21-1N022E	TB-1C004-B3	1W106A	1TC613-E
I	1Q4206	PSV-B21-1F013F	SAFETY RELIEF VALVE	SV-14113F	PS-B21-1N022F	TB-1C004-B3	1W106A	1TC613-E
I	1Q4207	PSV-B21-1F013G	SAFETY RFLIEF VALVE	SV-14113G3	PS-B21-1N022G	TB-1C004-C1	1W106A	1TC613-E
I	1Q4208	PSV-B21-1F013H	SAFETY RELIEF VALVE	SV-14113H	PS-B21-1N022H	TB-1C004-C1	1W106A	1TC613-E
I	1Q4209	PSV-B21-1F013J	SAFETY RELIEF VALVE	SV-14113J3	PS-B21-1N022J	TB-1C004-C1	1W106A	1TC613-E
I	1Q4210	PSV-B21-1F013K	SAFETY RELIEF VALVE	SV-14113K3	PS-B21-1N022K	TB-1C004-C1	1W106A	1TC613-E
I	1Q4211	PSV-B21-1F013L	SAFETY RELIEF VALVE	SV-14113L3	PS-B21-1N022L	TB-1C004-C1	1W106A	1TC613-E
I	1Q4212	PSV-B21-1F013M	SAFETY RELIEF VALVE	SV-14113M3	PS-B21-1N022M	TB-1C004-C1	1W106A	1TC613-E
I	1Q4213	PSV-B21-1F013N	SAFETY RELIEF VALVE	SV-14113N3	PS-B21-1N022N	TB-1C004-C1	1W106A	1TC613-E
I	1Q4214	PSV-B21-1F013P	SAFETY RELIEF VALVE	SV-14113P	PS-B21-1N022P	TB-1C004-C1	1W106A	1TC613-E
I	1Q4215	PSV-B21-1F013R	SAFETY RELIEF VALVE	SV-14113R	PS-B21-1N022R	TB-1C004-C1	1W106A	1TC613-E
I	1Q4216	PSV-B21-1F013S	SAFETY RELIEF VALVE	SV-14113S	PS-B21-1N022S	TB-1C004-C1	1W106A	1TC613-E

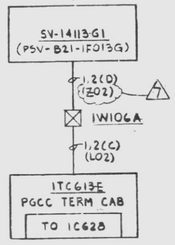

F/C-EK

ADS VALVE SV-14113G1

SCHEME Nº 1Q4217

(REF SH 4 (SCHEMES 1Q4217-22)
REF SH 8 (SCHEMES 1Q4223-28)

DIV. NO.	SCHEME Nº	VALVE Nº	VALVE DESCRIPTION	VALVE	F/C	PEN Nº	PGCC TERM. CAB No.
I	1Q4217	PSV-B21-1F013G	ADS VALVE	SV-14113G1	EK	1W106A	1TC613E
I	1Q4218	PSV-B21-1F013J	ADS VALVE	SV-14113J1	EK	1W106A	1TC613E
I	1Q4219	PSV-B21-1F013K	ADS VALVE	SV-14113K1	EK	1W106A	1TC613E
I	1Q4220	PSV-B21-1F013L	ADS VALVE	SV-14113L1	EK	1W106A	1TC613E
I	1Q4221	PSV-B21-1F013M	ADS VALVE	SV-14113M1	EK	1W106A	1TC613E
I	1Q4222	PSV-B21-1F013N	ADS VALVE	SV-14113N1	EK	1W106A	1TC613E
II	1Q4223	PSV-B21-1F013G	ADS VALVE	SV-14113G2	FK	1W106B	1TC624B
II	1Q4224	PSV-B21-1F013J	ADS VALVE	SV-14113J2	FK	1W106B	1TC624B
II	1Q4225	PSV-B21-1F013K	ADS VALVE	SV-14113K2	FK	1W106B	1TC624B
II	1Q4226	PSV-B21-1F013L	ADS VALVE	SV-14113L2	FK	1W106B	1TC624B
II	1Q4227	PSV-B21-1F013M	ADS VALVE	SV-14113M2	FK	1W106B	1TC624B
II	1Q4228	PSV-B21-1F013N	ADS VALVE	SV-14113N2	FK	1W106B	1TC624B

NOTES:

1. FOR STANDARD SYMBOLS FOR ELECTRICAL DIAGRAMS SEE DWG E-42.
2. DESIGN BASED ON GE/APED ELEMENTARY 791E403WJ (V/P 8856-M1-B21-129).

UNCONTROLLED DOCUMENT
FOR REFERENCE ONLY

PRC APERTURE CARD

REFERENCE DWG'S.	
BECHTEL NO.	PL. NO.
E-42	A-107191
8856-M1-B2H23	FF114510

No.	DATE	REVISIONS	BY	CHK	DESIGN SUPV.	ENG'R	PROJ. ENGR	APP'D
4	3/26/79	REV PER GE ELEM. FDI No WJEE	MK	SS	LL			
3	9/21/78	REVD TO INCORPORATE FCN-E-3253	VA	CAM HH	TC			
2	7/11/78	INCORP FCNE-2022	MK	MCA	TC			
1	3/23/78	INCORPORATED FCE-1636	MK	RA	TC			
0	3/3/78	ISSUED FOR CONSTRUCTION	BC	M.T.				

SCALE NONE | DESIGNED B. CHOW | DRAWN R. FONG | CHIEF ENGR.

PENNSYLVANIA POWER & LIGHT COMPANY
ALLENTOWN, PENNSYLVANIA
SUSQUEHANNA STEAM ELECTRIC STATION - UNIT 1, UNIT 2

BECHTEL - SAN FRANCISCO

BLOCK DIAGRAM ADS & SAFETY RELIEF VALVES UNIT 1

JOB No.	DRAWING No.	REV.
8856	E-180 SH 2	7

D-107329 SH 2

Docket #50-387
Control #8305250117-44
Date 5/10/83 of Document:
REGULATORY DOCKET FILE

EDWARD K. KANG — PROFESSIONAL ENGINEER — COMMONWEALTH OF PENNSYLVANIA — 17536E
5/4/78

G1T01 BLK DIAG ADS SAFETY VALVE M

24X

I certify that the microfilmed image contained on this microform were made in the normal and regular course of business. This is a true, full, correct and complete reproduction and replacement for and/or in lieu of original documents generated by the Bechtel group of companies.
Signature DANNY Date 8-25-82 MRG 1
Camera Operator

D

This drawing and the design it covers are the property of BECHTEL. They are merely loaned and on the borrower's express agreement that they will not be reproduced, copied, loaned, exhibited, nor used except in the limited way and private use permitted by any written consent given by the lender to the borrower.

TE-B21-IN004A | TE-B21-IN004C | TE-B21-IN004E | TE-B21-IN004G | TE-B21-IN004J | TE-B21-IN004M | TE-B21-IN004P | TE-B21-IN004S | TE-B21-IN004B | TE-B21-IN004D | TE-B21-IN004F | TE-B21-IN004H | TE-B21-IN004K | TE-B21-IN004L | TE-B21-IN004N | TE-B21-IN004R

1†1-(C) (TQ5) | 2†2-(D) (TQ5) | 3†3-(E) (TQ5) | 4†4-(F) (TQ5) | 5†5-(G) (TQ5) | 6†6-(H) (TQ5) | 7†7-(J) (TQ5) | 8†8-(K) (TQ5) | 9†9-(M) (TQ5) | 10†10-(N) (TQ5) | 11†11-(P) (TQ5) | 12†12-(Q) (TQ5) | 13†13-(R) (TQ5) | 14†14-(S) (TQ5) | 15†15-(T) (TQ5) | 16†16-(U) (TQ5)

1W103B PENETRATION | 1W103A PENETRATION

1†1-,2†2-,3†3-,4†4-,5†5-,6†6-,7†7-,8†8-(L) (TQ6)

9†9-,10†10-,11†11-,12†12-,13†13-,14†14-,15†15-,16†16-(V) (TQ6)

1C614-E
NSSS TEMP RECORD & LEAK DETECT V.B

F/C NM
ADS TEMPERATURE RECORDING
SCHEME NO 1Q4229

REF SH 2

1TB1C004-B1
REAC VESSEL LEVEL 3 PRESS PANEL
LIS-B21-IN031A | LIS-B21-IN031C

1TB1C004-A1
REAC VESSEL LEVEL 3 PRESS PANEL
LIS-B21-IN042A

1TB1C057-A3
DRYWELL PRESS LOCAL PANEL "A"
PS-E11-IN010A | PS-E11-IN010C

1TB1C001-A1
CORE SPRAY INST PNL A
PS-E21-IN008A PS-E21-IN009A

1TB1C018-A2
RHR INST PNL A
PS-E11-IN016A PS-E11-IN020A
PS-E11-IN016C PS-E11-IN020C

S | 1H,2H,3H 4H(H) (LO5) | 1,2,3,4(C) (LO3) | 5,6(D) (LO2) | 7,8,9,10(G) (LO5) | 5,16,17,18(E) (LO5) | 19,20,21,22,23,24,25,26(F) (L12)

1TC613-E
PGCC TERMINAL CABINET
TO 1C628

F/C EK
ADS DIV I CONTROL I
SCHEME NO 1Q4230

REF 3 & 4

1TB1C005-A3
REAC VESSEL LEVEL & PRESS PANEL B
LIS-B21-IN042B

1TB1C005-B2
REAC VESSEL LEVEL & PRESS PANEL B
LIS-B21-IN031B | LIS-B21-IN031D

1TB1C019-A1
CORE SPRAY INST PNL B
PS-E21-IN008B PS-E21-IN009B

1TB1C021-A3
RHR INST PNL B
PS-E11-IN016B PS-E11-IN020B
PS-E11-IN016D PS-E11-IN020D

1,2(C) (LO2) | 3,4,5,6(D) (LO3) | 15,16,17,18(E) (LO5) | 19,20,21,22,23,24,25,26(F) (L12)

1TC624-B
PGCC TERM CAB
TO 1C631

F/C FK
ADS DIVII CONTROL II
SCHEME NO 1Q4231

REF SH 3 & 4

7,8,9,10(G) (LO5)

EL "B"
-WO10D

NOTES

1. FOR STANDARD SYMBOLS FOR ELECTRICAL DIAGRAMS SEE E-42.
2. DESIGN BASED ON GE/APED ELEMENTARY 79:E403WJ (V/P 8856-MI-B21-129).
3. FOR 125VDC POWER SUPPLY TO PANEL 1C628 & 1C631 SEE DWG. E-64 SH. 11

Docket # 50-387
Control # 8003220117-45
Date 3/10/83 of Document:
REGULATORY DOCKET FILE

UNCONTROLLED DOCUMENT FOR REFERENCE ONLY

REFERENCE DWG'S.	
BECHTEL NO.	PL. NO.
E-42	A-107191
8856-MI-B21-129	FF114510
E-64	D-107213

NO.	DATE	REVISIONS	BY	CHK'D	SUPV	ENG'R	PROJ ENGR	APP'D
4	3/31/11	REVISED REF DWG NOS. (DCR #42)						
3	1/16/79	ADDED PNL SECTION NO.						
2	11/5/77	REVISED SCHEME NO AND ADDED SECTION NO.						
1	7/1/76	REVISED TO INCORP FCR E-10542						
0	9/13/75	ISSUED FOR CONSTRUCTION						

SCALE NONE | DESIGNED B. CHOW | DRAWN W.Y. CHAN | CHIEF ENGR

PENNSYLVANIA POWER & LIGHT COMPANY
ALLENTOWN, PENNSYLVANIA
SUSQUEHANNA STEAM ELECTRIC STATION - UNIT 1, UNIT 2

BECHTEL - SAN FRANCISCO

BLOCK DIAGRAM
ADS CONTROL & PWR DIST
UNIT 1

JOB No.	DRAWING No.	REV.
8856	E-180 SH3	5
	D-107329 SH3	

EDWARD K. KANG REGISTERED PROFESSIONAL ENGINEER 17530-E CALIFORNIA
9/4/75
Edward K. Kang

G1T01 | BLK DIAG ADS CONT & PWR 1 | W

PRC APERTURE CARD

24X

I certify that the microfilmed images contained on this microform were made in the normal and regular course of business. This is a true, full, correct and complete reproduction and replacement for and/or in lieu of original documents generated by the Bechtel group of companies.
Signed: Camera Operator Date 12-9-81 Camera Type MRC I

D

This drawing and the design it covers are the property of BECHTEL. They are merely loaned and on the borrower's express agreement that they will not be reproduced, copied, loaned, exhibited, nor used except in the limited way and private use permitted by any written consent given by the lender to the borrower.

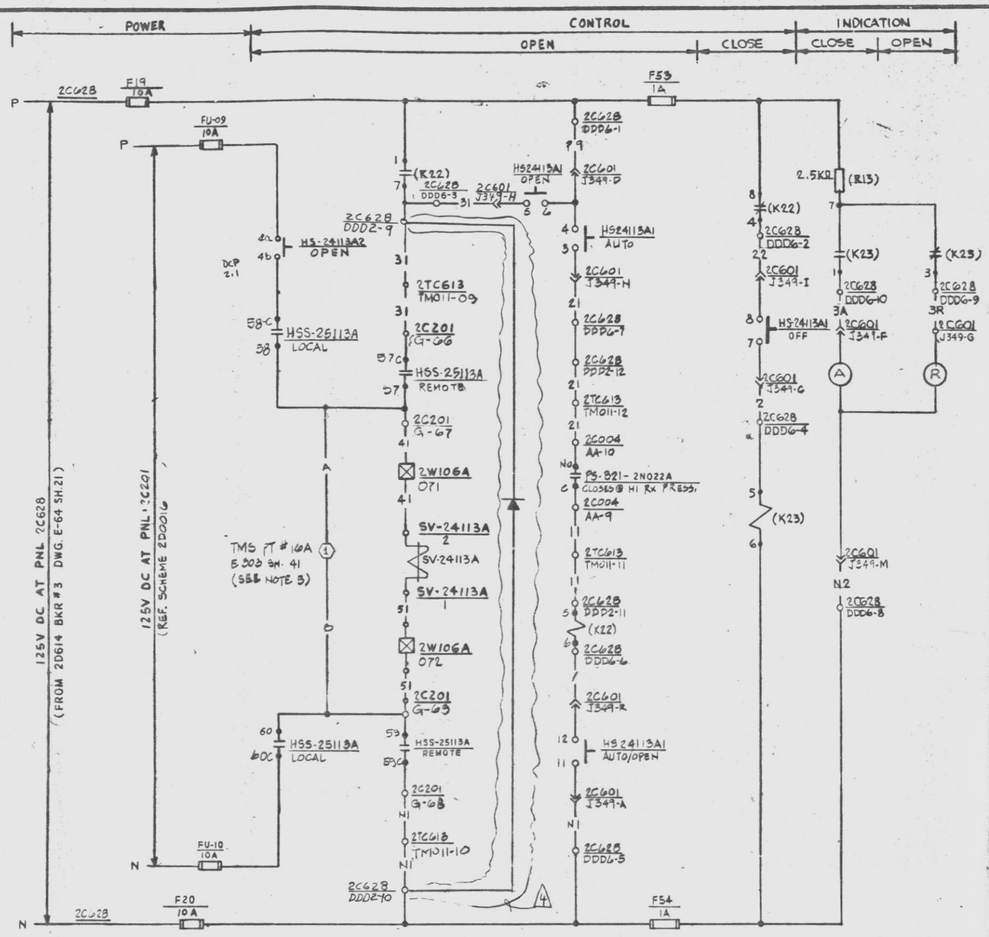

SAFETY RELIEF VALVE PSV-B21-2F013A [I]

SCHEME NO 2Q4201
(REF. SH. 7)

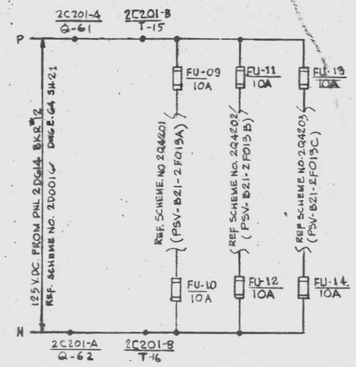

125 VDC POWER SUPPLY TO 2C201 [I]

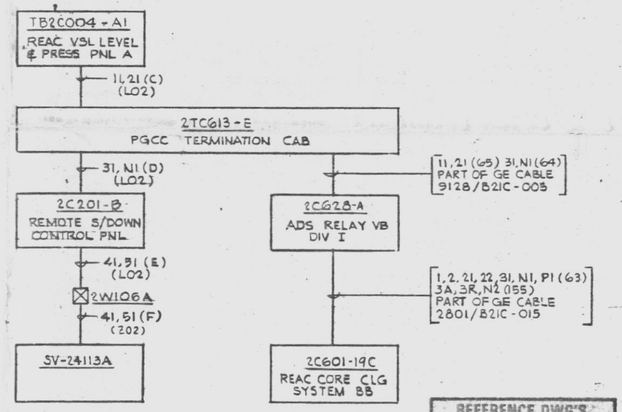

F/C-EK

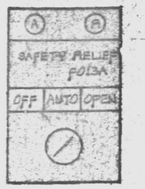

2C601 F.V.

BLOCK No.	CONTACT No.	POSITION OFF	POSITION AUTO	POSITION OPEN	DRAWING No.
TOP	1-2	X			E-324 SH30
	3-4		X	X	THIS SHEET
BTM	5-6			X	THIS SHEET
	7-8	X	X		THIS SHEET
TOP	9-10	X			SPARE
	11-12		X	X	THIS SHEET
BTM	13-14			X	SPARE
	15-16	X	X		SPARE

CONTROL SWITCH HS-24113A1, B1, C1
GENERAL ELECTRIC TYPE CR2940
MAINTAINED CONTACTS

NOTE

1. FOR STANDARD SYMBOLS FOR ELECTRICAL DIAGRAMS SEE E-42.
2. FOR SWITCH DEVELOPMENT OF REMOTE SHUTDOWN PANEL (2C201) SWITCHES SEE DWG E-149 SH 1&2.
3. NOS IN PARENTHESIS ARE GE DEVICE NOS.
4. DESIGN BASED ON GE/APED ELEMENTARY 791E403E (V/P 8856-M1-B21-102)
5. TRANSIENT MONITORING SYSTEM SPECIAL CKT IS ENERGIZED WHENEVER THE SOLENOID IS ACTUATED WHICH RESULTS IN 0-10V SIGNAL FOR STARTREC.

PRC APERTURE CARD

Docket # 50-387
Control # 8803220417-46
Date 3/10/88 of Document:
REGULATORY DOCKET FILE

UNCONTROLLED DOCUMENT FOR REFERENCE ONLY

SCHEME NO	FACILITY CODE	PEN NO	2W106A PEN	TERM NO	VALVE NO	VALVE DESCRIPTION	SOLENOID NO	CONTROL SWITCH NO	CONTROL SWITCH LOCATION	PRESSURE SWITCH NO	PRESSURE SWITCH LOC	PRESSURE SWITCH TERM. NO.	FUSE NO. IN PANEL 2C628	2C201 TERMINATION	2C201 MATCH NO	2C201 TMS PT NO	TRANSFER SWITCH NO.	TRANSFER SWITCH CONTACT	TRANSFER SWITCH LOC
2Q4201	B-K	2W106A	071	072	PSV-B21-2F013A	SAFETY RELIEF F013A	SV-24113A	HS-24113A1	2C601-19C	PS-B21-2N022A	TB-2C004-A1	AA-9 / AA-10	FU-19 FU-20 FU-53 FU-54	G-66 G-67 G-68 G-69	1	16A	HSS-25113A	57,58,59,60	2C201-B
								HS-24113A2	2C201										
2Q4202	B-K	2W106A	087	088	PSV-B21-2F013B	SAFETY RELIEF F013B	SV-24113B	HS-24113B1	2C601-19C	PS-B21-2N022B	TB-2C004-A1	AA-11 / AA-12	FU-21 FU-22 FU-59 FU-60	G-33 G-34 G-35 G-36	2	16B	HSS-25113B	57,58,59,60	2C201-B
								HS-24113B2	2C201										
2Q4203	B-K	2W106A	089	090	PSV-B21-2F013C	SAFETY RELIEF F013C	SV-24113C	HS-24113C1	2C601-19C	PS-B21-2N022C	TB-2C004-A1	AA-13 / AA-14	FU-23 FU-24 FU-65 FU-66	G-90 G-89 G-88 G-87	3	16C	HSS-25114A	57,58,59,60	2C201-B

AUX RELAY COIL NO	AUX RELAY CONTACT NO	AUX RELAY COIL NO	AUX RELAY CONTACT NO	FITS 2TC613 SECT. E TERMINATION				LINE CODE	CABLE NO.	FITS 2C628 SECT A				SITS 2C628 SECT. A TERMINATION												LINE CODE	CABLE NO.	SITS 2C601 SECT 19C											
5 (K23) 6	7 1 3	5 (K22) 6	4 8 1 7	TM-011 -9	TM-011 -10	TM-011 -11	TM-011 -12	64 65	9128/B21C-005	DDD2-11	DDD2-12	DDD2-9	DDD2-10	DDD6-1	DDD6-2	DDD6-3	DDD6-4	DDD6-9	DDD6-10	DDD6-5	DDD6-6	DDD6-7	DDD6-8	63 155	2801/B21C-015	J349 R C N I H A D F G M											
5 (K29) 6	7 1 3	5 (K28) 6	4 8 1 7	TM-010 -5	TM-010 -19	TM-010 -7	TM-010 -8	73 74	9128/B21C-004	DDD1-7	DDD1-8	DDD1-5	DDD1-6	BBB2-8	BBB2-9	BBB2-10	BBB2-11	BBB3-8	BBB3-9	BBB3-12	BBB3-13	AAA3-5	AAA3-6	72 156	2801/B21C-011 2801/B21C-013	J226 U W L G F V M				J228 N Q H							
5 (K35) 6	7 1 3	5 (K34) 6	4 8 1 7	TM-010 -15	TM-010 -16	TM-009 -1	TM-009 -2	82 83	9128/B21C-004 9128/B21C-003	DDD3-1	DDD3-2	DDD1-15	DDD1-16	AAA3-1	AAA3-2	AAA3-3	AAA3-4	BBB3-11	BBB3-12	SBB3-13	AAA3-5	AAA3-6	AAA3-11	91 101	2801/B21C-003 2801/B21C-012	J224 R C N I H A D U V W				J227							

G2T01 SCHEM SAFETY RELIEF VALVE

REFERENCE DWG'S. BECHTEL NO:	PL. NO.
E-42	A-107191
E-64	D-107213
M1-B21-102	FF119510
E-149	D-107295

NO.	DATE	REVISIONS	BY	CHK'R	DESIGN SUPV	ENGR	PROJ ENGR	APP'D
10	2/26/87	REVISED PER FCDR KR2-944 REV0	BCC	SK				
9	9/21/82	REV. PER DCP 1082, FCN E-3379 & FOR DOCUMENTATION ONLY (NO 14901 INCORP. REV. 2)	AC	SK				
8	10/28/81	REV. TERM. NO., FUSE NO., CABLE F & ADDED NOTE 5 (DCR 93)	SAK	SK				
7	10/6/77	ADDED TRANSFER SWITCH NO. AND REV. AS NOTED	JB	DEB				
6	5/1/77	ISSUED FOR CONSTRUCTION	JB	M.T. ZW				

SCALE CYO | DESIGNED A. SANCHEZ | DRAWN M.H. YOUNG

PENNSYLVANIA POWER & LIGHT COMPANY
ALLENTOWN, PENNSYLVANIA
SUSQUEHANNA STEAM ELECTRIC STATION – UNIT 1, UNIT 2

BECHTEL – SAN FRANCISCO

SCHEMATIC DIAGRAM
SAFETY RELIEF VALVES
UNIT 2

JOB No.	DRAWING No.	REV.
8856	E-180 SH 4	4

D-107329 SH 4

24X

I certify that the microfilmed image contained on this microform were made in the normal and regular course of business. This is a true, full, correct and complete reproduction and replacement for and/or in lieu of original documents generated by the Bechtel group of companies.
Signed DANNY Date 10-23 Camera Type MRG1
Camera Operator

D

This drawing and the design it covers are the property of BECHTEL. They are not to be reproduced, copied, loaned, exhibited, or used except in the limited way and private use permitted by any written consent given by the lender to the borrower.

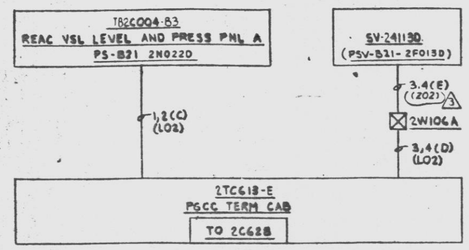

F/C-EK

SAFETY RELIEF VALVE SV-24113D [I]

SCHEME Nº 2Q4204

REF SH 7

DIV. NO.	SCHEME Nº	VALVE Nº	VALVE DESCRIPTION	VALVE LOC.	PRESSURE SWITCH Nº	PRESSURE SWITCH LOC	PENETRATION Nº	PGCC TERM CAB Nº	REF. SH.
I	2Q4204	PSV-B21-2F013D	SAFETY RELIEF VALVE	SV-24113D	PS-B21-2N022D	TB 2C004-B3	2W106A	2TC613-E	7
I	2Q4209	PSV-B21-2F013E	SAFETY RELIEF VALVE	SV-24113E	PS-B21-2N022E	TB 2C004-B3	2W106A	2TC613-E	
I	2Q4206	PSV-B21-2F013F	SAFETY RELIEF VALVE	SV-24113F	PS-B21-2N022F	TB 2C004-B3	2W106A	2TC613-E	
I	2Q4207	PSV-B21-2F013G	SAFETY RELIEF VALVE	SV-24113G3	PS-B21-2N0226	TB 2C004-C1	2W106A	2TC613-E	
I	2Q4208	PSV-B21-2F013H	SAFETY RELIEF VALVE	SV-24113H	PS-B21-2N022H	TB 2C004-C1	2W106A	2TC613-E	
I	2Q4209	PSV-B21-2F013J	SAFETY RELIEF VALVE	SV-24113J3	PS-B21-2N022J	TB 2C004-C1	2W106A	2TC613-E	
I	2Q4210	PSV-B21-2F013K	SAFETY RELIEF VALVE	SV-24113K3	PS-B21-2N022K	TB 2C004-C1	2W106A	2TC613-E	8
I	2Q4211	PSV-B21-2F013L	SAFETY RELIEF VALVE	SV-24113L3	PS-B21-2N022L	TB 2C004-C1	2W106A	2TC613-E	
I	2Q4212	PSV-B21-2F013M	SAFETY RELIEF VALVE	SV-24113M3	PS-B21-2N022M	TB 2C004-C1	2W106A	2TC613-E	
I	2Q4213	PSV-B21-2F013N	SAFETY RELIEF VALVE	SV-24113N3	PS-B21-2N022N	TB 2C004-C1	2W106A	2TC613-E	
I	2Q4214	PSV-B21-2F013P	SAFETY RELIEF VALVE	SV-24113P	PS-B21-2N022P	TB 2C004-C1	2W106A	2TC613-E	
I	2Q4215	PSV-B21-2F013R	SAFETY RELIEF VALVE	SV-24113R	PS-B21-2N022R	TB 2C004-C1	2W106A	2TC613-E	
I	2Q4216	PSV-B21-2F013S	SAFETY RELIEF VALVE	SV-24113S	PS-B21-2N022S	TB 2C004-C1	2W106A	2TC613-E	

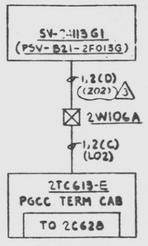

F/C-EK

ADS VALVE SV-24113G1 [I]

SCHEME Nº 2Q4217

REF SH 5

DIV. NO.	SCHEME Nº	VALVE Nº	VALVE DESCRIPTION	VALVE	F/C	PEN Nº	PGCC TERM CAB	REF. SH.
I	2Q4217	PSV-B21-2F013G	ADS VALVE	SV-24113G1	EK	2W106A	2TC613-E	5
I	2Q4218	PSV-B21-2F013J	ADS VALVE	SV-24113J1	EK	2W106A	2TC613-E	
I	2Q4219	PSV-B21-2F013K	ADS VALVE	SV-24113K1	EK	2W106A	2TC613-E	
I	2Q4220	PSV-B21-2F013L	ADS VALVE	SV-24113L1	EK	2W106A	2TC613-E	
I	2Q4221	PSV-B21-2F013M	ADS VALVE	SV-24113M1	EK	2W106A	2TC613-E	
I	2Q4222	PSV-B21-2F013N	ADS VALVE	SV-24113N1	EK	2W106A	2TC613-E	
II	2Q4223	PSV-B21-2F013G	ADS VALVE	SV-24113G2	FK	2W106B	2TC624-B	6
II	2Q4224	PSV-B21-2F013J	ADS VALVE	SV-24113J2	FK	2W106B	2TC624-B	
II	2Q4225	PSV-B21-2F013K	ADS VALVE	SV-24113K2	FK	2W106B	2TC624-B	
II	2Q4226	PSV-B21-2F013L	ADS VALVE	SV-24113L2	FK	2W106B	2TC624-B	
II	2Q4227	PSV-B21-2F013M	ADS VALVE	SV-24113M2	FK	2W106B	2TC624-B	
II	2Q4228	PSV-B21-2F013N	ADS VALVE	SV-24113N2	FK	2W106B	2TC624-B	

NOTES:

1. FOR STANDARD SYMBOLS FOR ELECTRICAL DIAGRAMS SEE DWG E-42.
2. DESIGN BASED ON GE/APED ELEMENTARY 791E403AE (V/P 8856-M1-B21-102).

UNCONTROLLED DOCUMENT
FOR REFERENCE ONLY

REFERENCE DWG'S.	
BECHTEL NO.	PL. NO.
E-42	A-107191
8856-M1-B21-102	FF114510

NO.	DATE	REVISIONS	BY	CK'D	ELEC SUPV	ELEC ENGR	PROJ ENGR	APP'D
4	9/15/92	REV TO INCORP FCN E-3380	JL	BKC				
3	11/9/81	REV CA CODE FROM L02 TO C02 IN CONTAINMENT. REF SH NO (DCR 9) & INCORP FCN E-2173	JL					
2	9/27/77	ADDED PANEL SECTION NO.						
1	3/1/77	ISSUED FOR CONSTRUCTION						

SCALE NO | DESIGNED A. SANCHEZ | DRAWN M. YOUNG | CHKD ENGR

PENNSYLVANIA POWER & LIGHT COMPANY
ALLENTOWN, PENNSYLVANIA
SUSQUEHANNA STEAM ELECTRIC STATION - UNIT 1, UNIT 2

BECHTEL - SAN FRANCISCO

BLOCK DIAGRAM
ADS & SAFETY RELIEF VALVES
UNIT 2

JOB No.	DRAWING No.	REV.
8856	E-180 SH 5	3

D-107329 SH 5

PRC APERTURE CARD

Docket # 50-387
Control # 8303220117-47
Date 3/10/83 of Document:
REGULATORY DOCKET FILE

G2TC1 BLK DIAG ADS SAFETY VALVE M

24X

I certify that the microfilmed image contained on this microform were made in the normal and regular course of business. This is a true, full, correct and complete reproduction and replacement for and/or in lieu of original documents appearing in the Bechtel archives or elsewhere.
Signed RHEY Camera Operator
Camera Type MRG-II

D

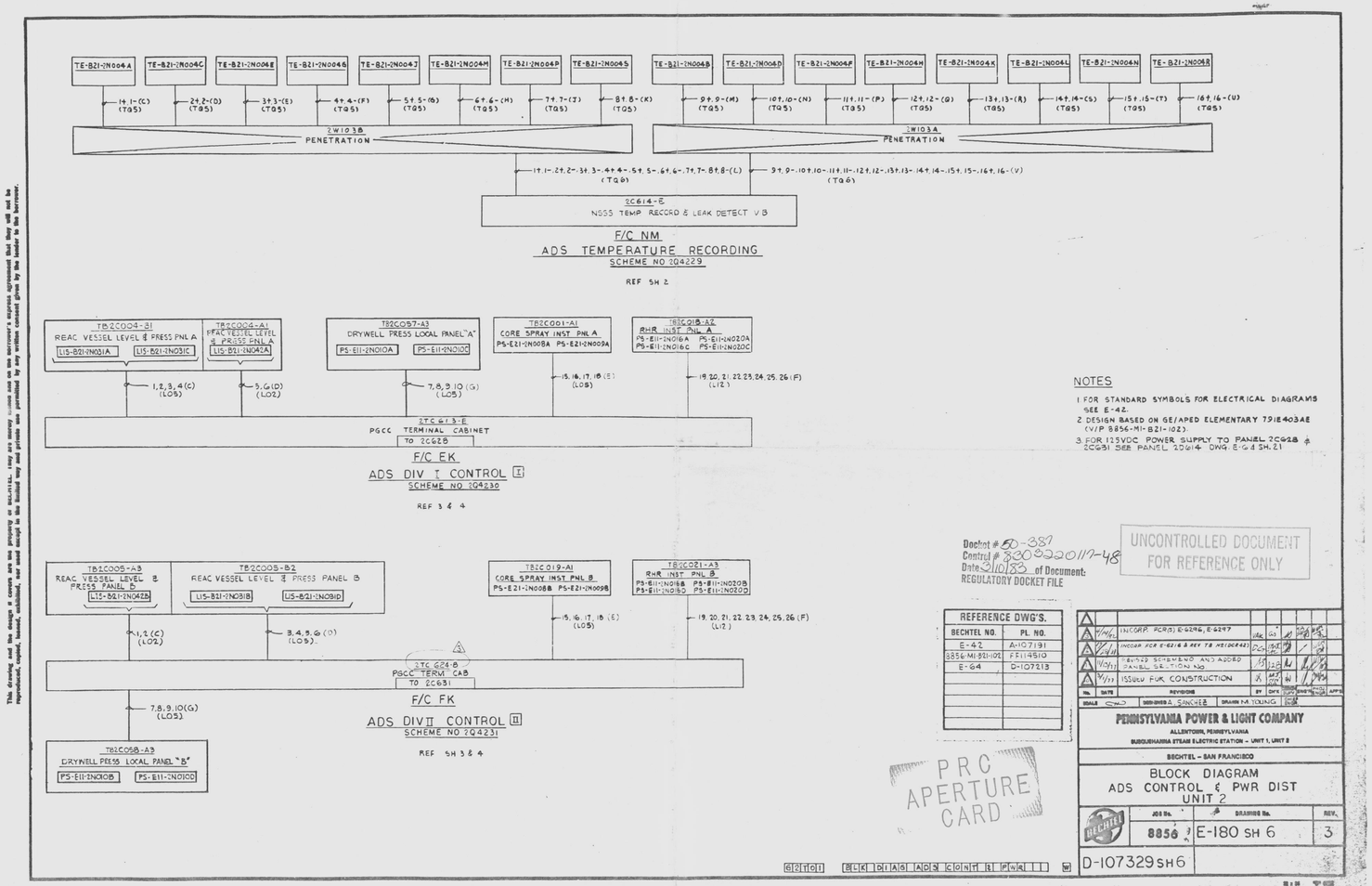

NOTES

1. FOR STANDARD SYMBOLS FOR ELECTRICAL DIAGRAMS SEE E-42.
2. DESIGN BASED ON GE/APED ELEMENTARY 791E403AE (V/P 8856-M1-B21-102).
3. FOR 125VDC POWER SUPPLY TO PANEL 2C628 & 2C631 SEE PANEL 2D614 DWG. E-64 SH. 21

Docket # 50-387
Control # 8303220117-48
Date 3/10/83 of Document:
REGULATORY DOCKET FILE

UNCONTROLLED DOCUMENT FOR REFERENCE ONLY

REFERENCE DWG'S.	
BECHTEL NO.	PL. NO.
E-42	A-107191
8856-M1-B21-102	FF114510
E-64	D-107213

NO.	DATE	REVISIONS	BY	CHK	ENGR	APP'D
3	4/14/82	INCORP. FCR(S) E-6296, E-6297	[illegible]	[illegible]	[illegible]	[illegible]
2	7/29/81	INCORP FCR E-6216 & REV TB HE(DC442)	DG	[illegible]	[illegible]	[illegible]
1	11/20/77	REVISED SCHEME NO AND ADDED PANEL SECTION NO.	[illegible]	[illegible]	[illegible]	[illegible]
0	3/1/77	ISSUED FOR CONSTRUCTION	[illegible]	[illegible]	[illegible]	[illegible]

SCALE NONE DESIGNED A. SANCHEZ DRAWN M. YOUNG

PENNSYLVANIA POWER & LIGHT COMPANY
ALLENTOWN, PENNSYLVANIA
SUSQUEHANNA STEAM ELECTRIC STATION – UNIT 1, UNIT 2

BECHTEL – SAN FRANCISCO

BLOCK DIAGRAM
ADS CONTROL & PWR DIST
UNIT 2

JOB No.	DRAWING No.	REV.
8856	E-180 SH 6	3

D-107329 SH 6

PRC APERTURE CARD

62T01 BLK DIAG ADS CONT & PWR

24X

I certify that the microfilmed image contained on this microform were made in the normal and regular course of business. This is a true, full, correct and complete reproduction and replacement for and/or in lieu of original documents generated by the Bechtel group of companies.

Signed DANNY Camera Operator Date Camera Type MRC 1

D

This drawing and the design it covers are the property of BECHTEL. They are merely loaned and on the borrower's express agreement that they will not be reproduced, copied, loaned, exhibited, nor used except in the limited way and private use permitted by any written consent given by the lender to the borrower.

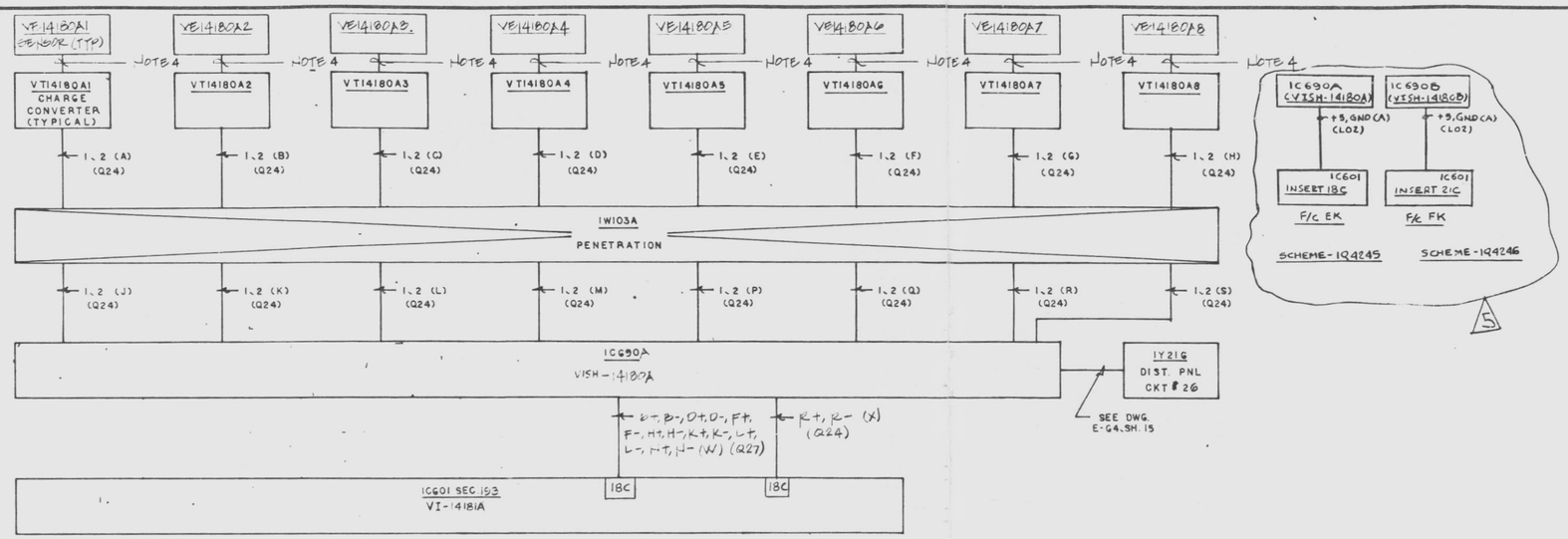

F/C-EK

SAFETY RELIEF VLV FLOW MONITORING SYS.

SCHEME NO IQ4233 I

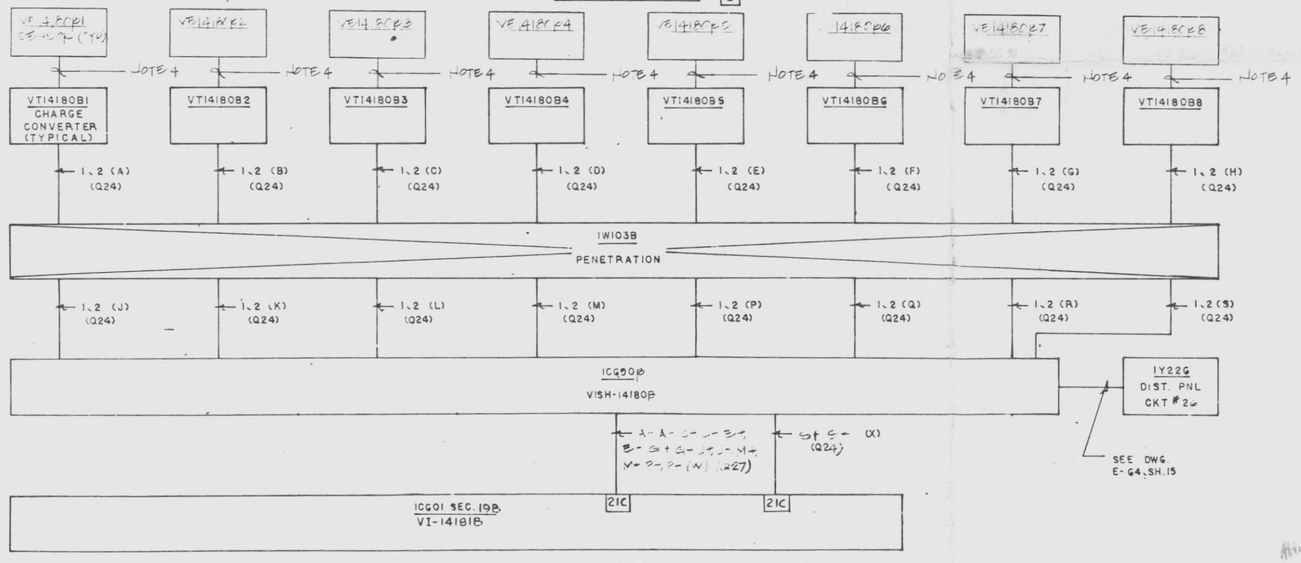

F/C-FK

SAFETY RELIEF VLV FLOW MONITORING SYS.

SCHEME NO IQ4234 II

NOTES:

1. FOR STANDARD SYMBOLS FOR ELECTRICAL DIAGRAM SEE DWG. E-42.
2. DESIGN BASED ON TEC COMPANY DWG 8856-JG3-23-1 & 8856-JG3-24-1 (W/P14140G103 & 14140710 3).
3. DO NOT TERMINATE SPARE WIRES IN PENETRATION. FIELD TO CRIMP & TAPE.
4. VENDOR SUPPLIED CABLE FIELD TO ROUTE IN CONDUIT

UNCONTROLLED DOCUMENT FOR REFERENCE ONLY

Docket # 50-387
Control # 8303220117-49
Date 3/10/83 of Document:
REGULATORY DOCKET FILE

THIS DOCUMENT IS UNDER PP&L ADMINISTRATIVE CONTROL. NO CHANGES CAN BE MADE WITHOUT PRIOR PP&L APPROVAL.

REFERENCE DWG'S.	
BECHTEL NO.	PL. NO.
E-42	A-107191

NO.	DATE	REVISIONS	BY	CHK	DESIGN SUPV	ENG'R	PROJ ENGR	APP'D
5	7/29/82	ISSUED "AS BUILT"	KS	MA				
4	7/6/82	REVISED TO INCORPORATE FCR E-5900	MA	MA				
3	6/4/81	REVISED TO INCORPORATE DCP 430 REV 0 & EWP-0008 REV 1 & 2	ENK					
2	1/7/81	ISSUED FOR CONSTRUCTION/ DCP 53.1, REV. 0	MPS					
1	7/30/79	ISSUED "AS BUILT"	MA	MA				

SCALE NONE | DESIGNED S. PAREKH | DRAWN MPSANTOS

PENNSYLVANIA POWER & LIGHT COMPANY
ALLENTOWN, PENNSYLVANIA
SUSQUEHANNA STEAM ELECTRIC STATION – UNIT 1, UNIT 2

BECHTEL – SAN FRANCISCO

BLOCK DIAGRAM
SRV FLOW MONITORING SYS
UNIT I

JOB No.	DRAWING No.	REV.
8856	E-180 SH.7	5
D-107329 SH.7		

G I T O I | B L K | D I A G | S R V | F L O W | M O N | S Y S | W

PRC APERTURE CARD

10-77 D.P. ANWRIGHT NO. 210-W.65

22 x 34 "D" SIZE

24X

I certify that the microfilmed image contained on this microform were made in the normal and regular course of business. This is a true, full, correct and complete reproduction and replacement for and/or in lieu of original documents generated by the Bechtel group of companies.
Signature NINOUS Date 8-9-82 Camera Type MRG-II
Camera Operator

D

This drawing and the design it covers are the property of BECHTEL. They are merely loaned and on the borrower's express agreement that they will not be reproduced, copied, loaned, sold, utilized, nor used except in the limited way and private use permitted by any written consent given by the lender to the borrower.

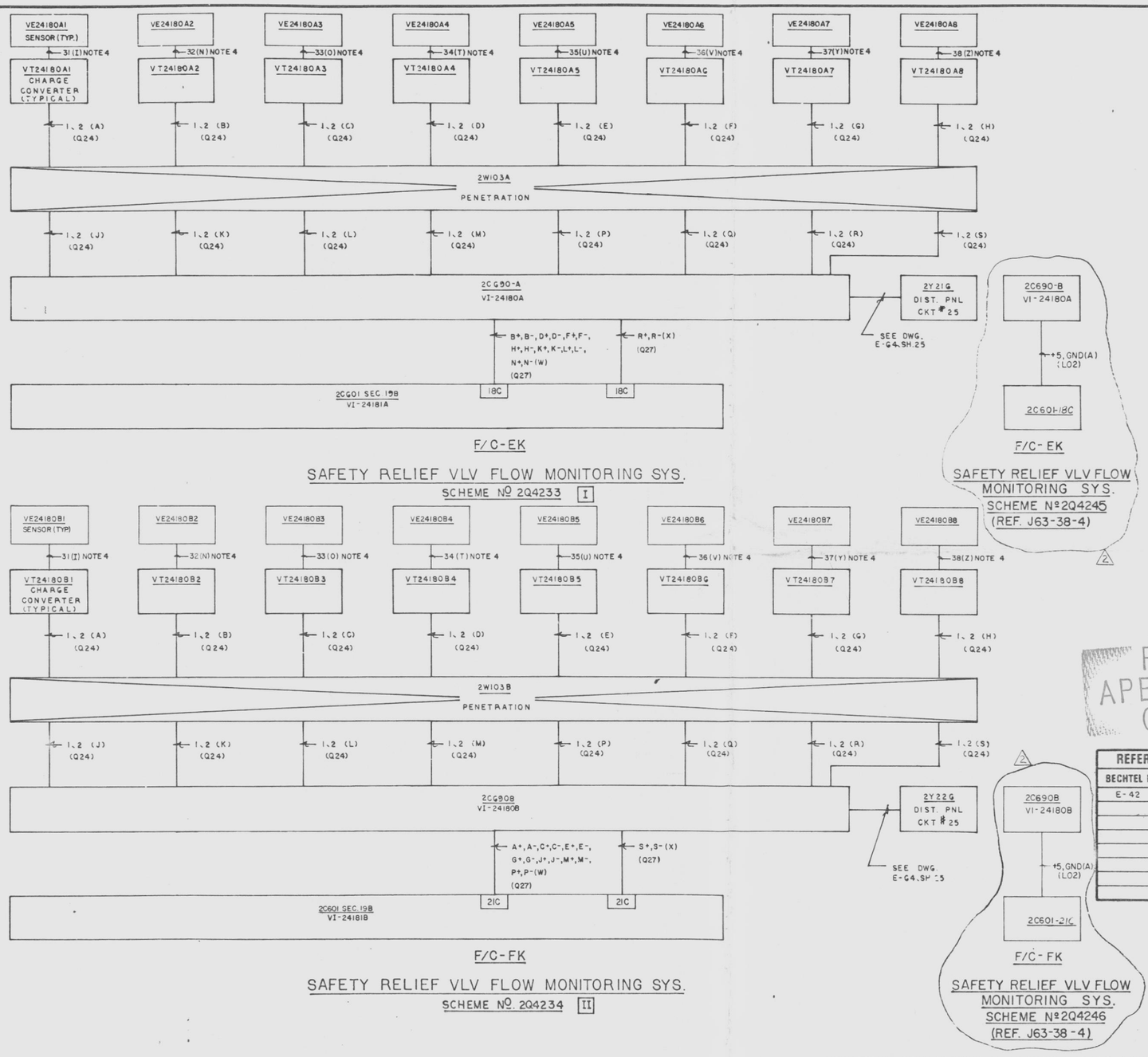

NOTES:

1. FOR STANDARD SYMBOLS FOR ELECTRICAL DIAGRAM SEE DWG. E-42.
2. DESIGN BASED ON TEC COMPANY DWG 885G-J63-23-1 & 885G-J63-24-1 (V/P1414CG103 & 1414C7103)
3. DO NOT TERMINATE SPARE WIRES IN PENETRATION. FIELD TO CRIMP & TAPE.
4. VENDOR SUPPLIED CABLE FIELD TO ROUTE IN CONDUIT.

Docket # 50-387
Control # 8303220117-50
Date 3/10/83 of Document
REGULATORY DOCKET FILE

PRC APERTURE CARD

UNCONTROLLED DOCUMENT FOR REFERENCE ONLY

REFERENCE DWG'S.	
BECHTEL NO.	PL. NO.
E-42	A-107191

No.	DATE	REVISIONS	BY	CHK	DESIGN SUPV	ENG	PROJ ENGR	APP'S
2	3/16/82	REVISED PER DCP 53.2, REV.1	NG	TN				
1	9/6/81	DELETED CABLES T,U,V. ADDED CABLES S,N,O,T, U,X,Y,Z. REVISED WIRE NUMBERS & ADDED VIP DEVICES (DCR 42) INCORP. DCP 53.2	NG	TN				
0	4/7/81	ISSUED FOR CONSTRUCTION / DCP 53.2, REV 0	MPS	CH				

SCALE NONE | DESIGNED S. PAREKH | DRAWN MPSANTOS

PENNSYLVANIA POWER & LIGHT COMPANY
ALLENTOWN, PENNSYLVANIA
SUSQUEHANNA STEAM ELECTRIC STATION – UNIT 1, UNIT 2

BECHTEL – SAN FRANCISCO

BLOCK DIAGRAM
SRV FLOW MONITORING SYS
UNIT 2

JOB No.	DRAWING No.	REV.
8856	E-180 SH.8	2

D-107329 SH 8

22 x 34 "D" SIZE

G2T01 BLK DIAG SRV FLOW MON SYS W

10/77 D.F. ARKWRIGHT NO. 2102-W005

24X

I certify that the microfilmed image contained on this microform was made in the normal and regular course of business. This is a true, full, correct and complete reproduction and replacement for and/or in lieu of original documents processed by the Bechtel group of companies.
Signature DANNY Date 5-19-82 Camera Type MRG 1
Camera Operator

This drawing and the design it covers are the property of BECHTEL. They are merely loaned and on the borrower's express agreement that they will not be reproduced, copied, loaned, exhibited, nor used except in the limited way and private use permitted by any written consent given by the lender to the borrower.

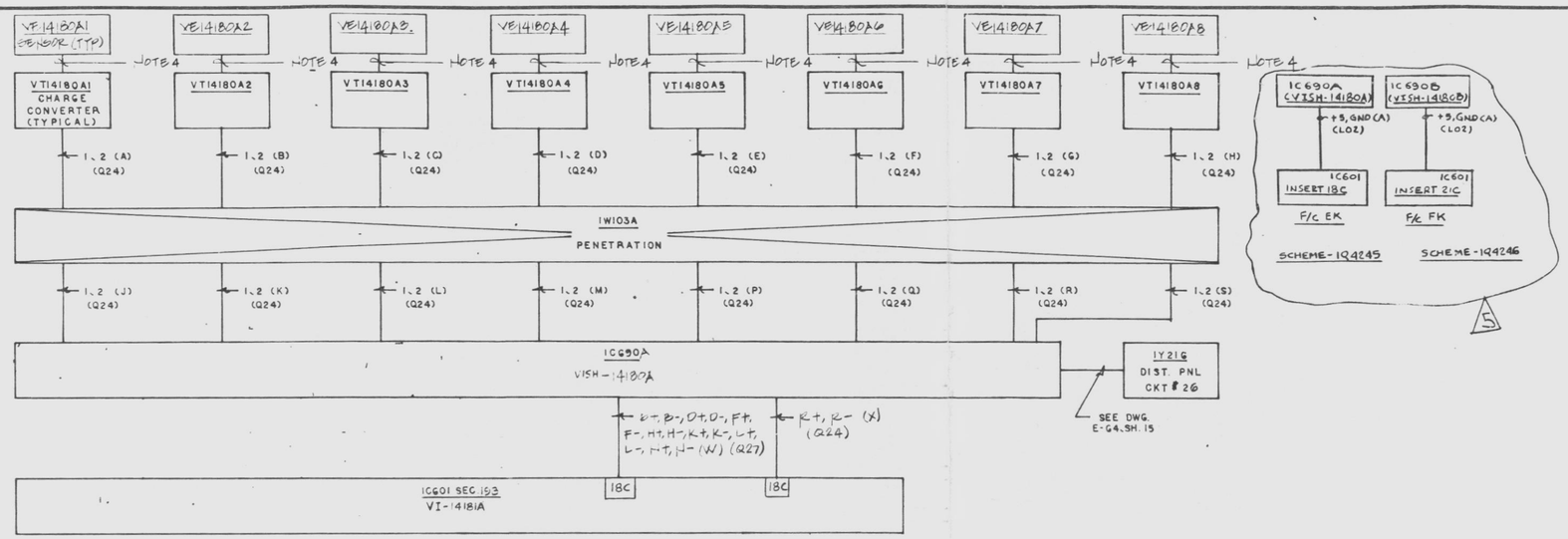

F/C-EK

SAFETY RELIEF VLV FLOW MONITORING SYS.

SCHEME NO IQ4233 I

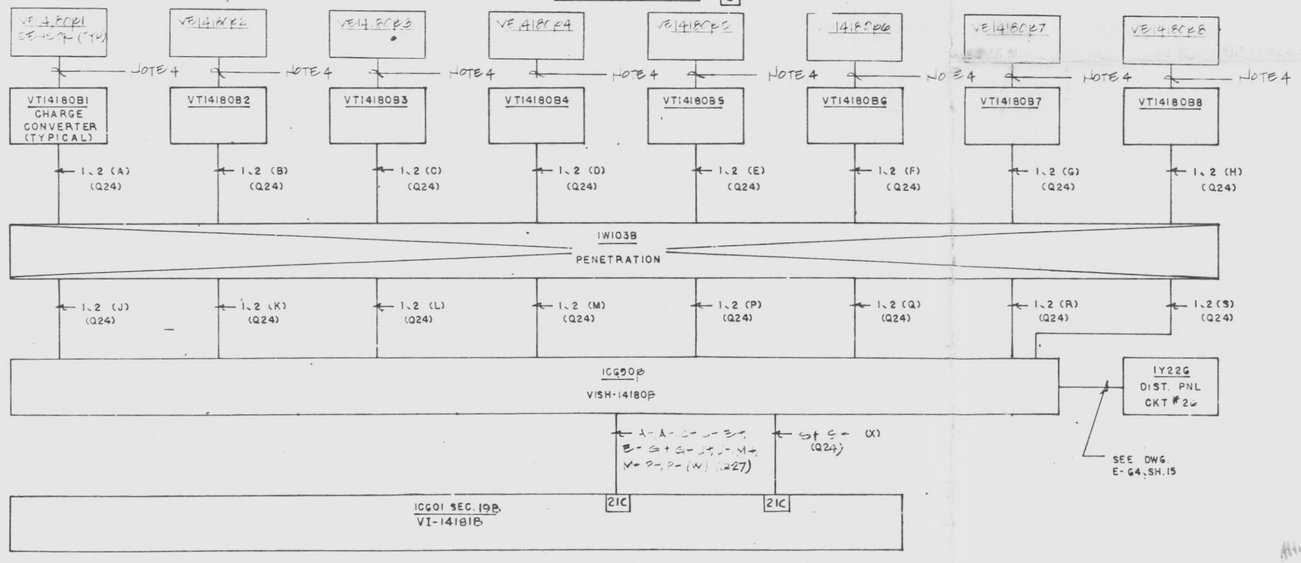

F/C-FK

SAFETY RELIEF VLV FLOW MONITORING SYS.

SCHEME NO IQ4234 II

NOTES:

1. FOR STANDARD SYMBOLS FOR ELECTRICAL DIAGRAM SEE DWG. E-42.
2. DESIGN BASED ON TEC COMPANY DWG 8856-JG3-23-1 & 8856-JG3-24-1 (W/P14140G103 & 14140710 3).
3. DO NOT TERMINATE SPARE WIRES IN PENETRATION. FIELD TO CRIMP & TAPE.
4. VENDOR SUPPLIED CABLE FIELD TO ROUTE IN CONDUIT

UNCONTROLLED DOCUMENT FOR REFERENCE ONLY

Docket # 50-387
Control # 8303220117-49
Date 3/10/83 of Document:
REGULATORY DOCKET FILE

THIS DOCUMENT IS UNDER PP&L ADMINISTRATIVE CONTROL. NO CHANGES CAN BE MADE WITHOUT PRIOR PP&L APPROVAL.

REFERENCE DWG'S.	
BECHTEL NO.	PL. NO.
E-42	A-107191

NO.	DATE	REVISIONS	BY	CHK	DESIGN SUPV	ENG'R	PROJ ENGR	APP'D
5	7/29/82	ISSUED "AS BUILT"	KS	MA				
4	7/6/82	REVISED TO INCORPORATE FCR E-5900	MA	MA				
3	6/4/81	REVISED TO INCORPORATE DCP 430 REV 0 & EWP-0008 REV 1 & 2	ENK					
2	1/7/81	ISSUED FOR CONSTRUCTION/ DCP 53.1, REV. 0	MPS					
1	7/30/79	ISSUED "AS BUILT"	MA	MA				

SCALE NONE | DESIGNED S. PAREKH | DRAWN MPSANTOS

PENNSYLVANIA POWER & LIGHT COMPANY
ALLENTOWN, PENNSYLVANIA
SUSQUEHANNA STEAM ELECTRIC STATION – UNIT 1, UNIT 2

BECHTEL – SAN FRANCISCO

BLOCK DIAGRAM
SRV FLOW MONITORING SYS
UNIT I

JOB No.	DRAWING No.	REV.
8856	E-180 SH.7	5
D-107329 SH.7		

G I T O I | B L K | D I A G | S R V | F L O W | M O N | S Y S | W

PRC APERTURE CARD

10-77 D.P. ANWRIGHT NO. 210-W.65

22 x 34 "D" SIZE

24X

I certify that the microfilmed image contained on this microform were made in the normal and regular course of business. This is a true, full, correct and complete reproduction and replacement for and/or in lieu of original documents generated by the Bechtel group of companies.
Signature NINOUS Date 8-9-82 Camera Type MRG-II
Camera Operator

D

This drawing and the design it covers are the property of BECHTEL. They are merely loaned and on the borrower's express agreement that they will not be reproduced, copied, loaned, sold, utilized, nor used except in the limited way and private use permitted by any written consent given by the lender to the borrower.

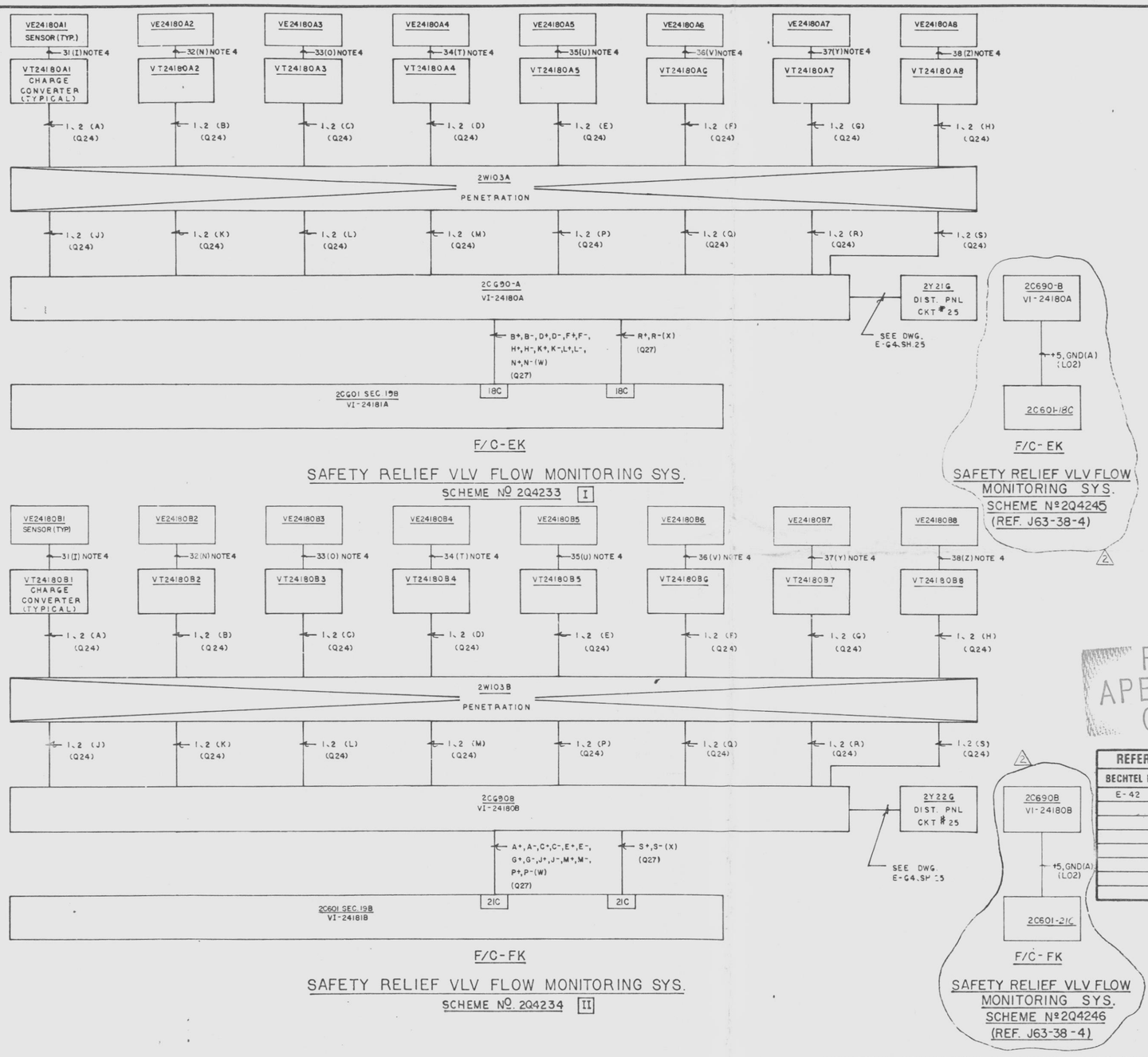

NOTES:

1. FOR STANDARD SYMBOLS FOR ELECTRICAL DIAGRAM SEE DWG. E-42.
2. DESIGN BASED ON TEC COMPANY DWG 885G-J63-23-1 & 885G-J63-24-1 (V/P1414CG103 & 1414C7103)
3. DO NOT TERMINATE SPARE WIRES IN PENETRATION. FIELD TO CRIMP & TAPE.
4. VENDOR SUPPLIED CABLE FIELD TO ROUTE IN CONDUIT.

Docket # 50-387
Control # 8303220117-50
Date 3/10/83 of Document
REGULATORY DOCKET FILE

PRC APERTURE CARD

UNCONTROLLED DOCUMENT FOR REFERENCE ONLY

REFERENCE DWG'S.	
BECHTEL NO.	PL. NO.
E-42	A-107191

No.	DATE	REVISIONS	BY	CHK	DESIGN SUPV	ENG	PROJ ENGR	APP'S
2	3/16/82	REVISED PER DCP 53.2, REV.1	NG	TN				
1	9/6/81	DELETED CABLES T,U,V. ADDED CABLES S,N,O,T, U,X,Y,Z. REVISED WIRE NUMBERS & ADDED VIP DEVICES (DCR 42) INCORP. DCP 53.2	NG	TN				
0	4/7/81	ISSUED FOR CONSTRUCTION / DCP 53.2, REV 0	MPS	CH				

SCALE NONE | DESIGNED S. PAREKH | DRAWN MPSANTOS

PENNSYLVANIA POWER & LIGHT COMPANY
ALLENTOWN, PENNSYLVANIA
SUSQUEHANNA STEAM ELECTRIC STATION – UNIT 1, UNIT 2

BECHTEL – SAN FRANCISCO

BLOCK DIAGRAM
SRV FLOW MONITORING SYS
UNIT 2

JOB No.	DRAWING No.	REV.
8856	E-180 SH.8	2

D-107329 SH 8

22 x 34 "D" SIZE

G2T01 BLK DIAG SRV FLOW MON SYS W

10/77 D.F. ARKWRIGHT NO. 2102-W005

24X

I certify that the microfilmed image contained on this microform was made in the normal and regular course of business. This is a true, full, correct and complete reproduction and replacement for and/or in lieu of original documents processed by the Bechtel group of companies.
Signature DANNY Date 5-19-82 Camera Type MRG 1
Camera Operator

This drawing and the design it covers are the property of BECHTEL. They are merely loaned and on the borrower's express agreement that they will not be reproduced, copied, loaned, exhibited, nor used except in the limited way and private use permitted by any written consent given by the lender to the borrower.

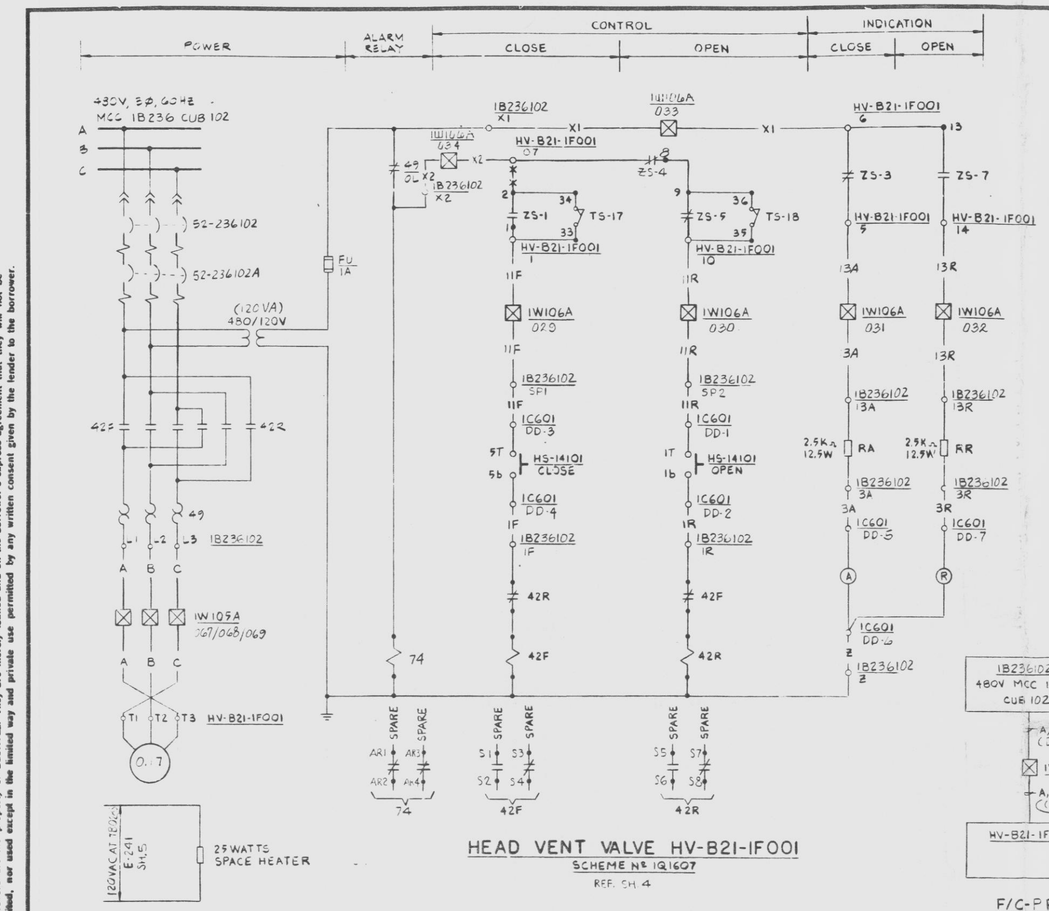

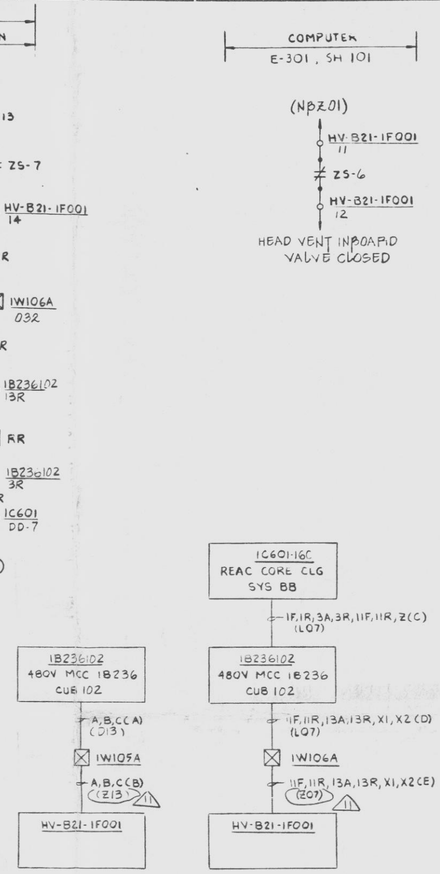

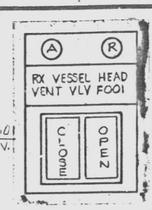

SWITCH DEVELOPMENT

BLOCK NO.	CONTACT NO.	POSITION CLOSE	POSITION OPEN	DWG NO.	CONTACT BLOCK Nº
1	1T o 1b		X	THIS SH	KLA1
5	5T o 5b	X		THIS SH	KLA1

CONTROL SWITCH: HS-14101, HS-14102, HS-14105
CUTLER HAMMER TYPE E-30AC
PUSHBUTTON MOMENTARY CONTACT

VALVE LIMIT SWITCH DEVELOPMENT

CONTACTS		100% OPEN	INTERMEDIATE	100% CLOSED	CONTACT USED
ZS-1	1 o 2				THIS SH
ZS-2	3 o 4				SPARE
ZS-3	5 o 6				THIS SH
ZS-4	7 o 8				THIS SH.
ZS-5	9 o 10				THIS SH
ZS-6	11 o 12				THIS SH
ZS-7	13 o 14				THIS SH
ZS-8	15 o 16				SPARE
TS-17	33 o 34	OPEN ON HIGH CLOSING TORQUE			THIS SH
TS-18	35 o 36	OPEN ON HIGH OPENING TORQUE			THIS SH

CONTACT CLOSED

HV-B21-1F001, HV-B21-1F002, HV-B21-1F005

SCHEME Nº	VALVE Nº	VALVE DESCRIPTION	HP	FACILITY CODE	STARTER LOCATION	CONTROL SWITCH Nº	CONTROL SWITCH LOC	CODING WIRE & TERMINAL NOS IF	IR	3A	3R	IF	IR	Z	PENETRATION CONTROL	TERMINAL Nº					POWER	TERM Nº		
1Q1607	HV-B21-1F001	RX VESSEL HEAD VENT VALVE F001	0.17	PP/PK	1B236102	HS-14101	CODING	DD-04	DD-02	DD-05	DD-07	DD-03	DD-01	DD-06	1W106A	029	030	031	032	033	1W105A	067	068	069
1Q1608	HV-B21-1F002	RX VESSEL HEAD VENT VALVE F002	0.17	RP/RK	1B246112	HS-14102	CODING	TB A-4	TB A-2	TB A-7	TB A-6	TB A-3	TB A-1	TB A-5	1W106B	043	044	045	046	047	1W105B	070	071	072
1Q1609	HV-B21-1F005	RX VESSEL HEAD VENT VALVE F005	0.17	RP/RK	1B246113	HS-14105	CODING	TB B-4	TB B-2	TB B-7	TB B-6	TB B-3	TB B-1	TB B-5	1W106B	050	051	052	053	054	1W105B	073	074	075

COMPUTER	CKT. BREAKER		SPACE HEATER	COMPUTER
11 Z5-6 12 E-301 SH100	52-236102	52-236102A	TB0283-E241SH5	NBZ01 301-101
11 Z5-6 12 E-301 SH101	52-246112	52-246112A		NBZ02 301-101
Z5-2 4 E-301 SH101	52-246113	52-246113A		NBZ03 301-101

NOTES:

1. FOR STANDARD SYMBOLS FOR ELECTRICAL DIAGRAMS SEE DWG E 42.
2. ALL DEVICE Nº TO BE SUFFIXED BY STARTER LOCATION Nº UNLESS NOTED OTHERWISE.
3. DESIGN BASED ON GE/APED ELEMENTARY 791E402WJ CV/P 8856-B21-128

PRC APERTURE CARD

THIS DOCUMENT IS UNDER PP&L ADMINISTRATIVE CONTROL. NO CHANGES CAN BE MADE WITHOUT PRIOR PP&L APPROVAL.

REFERENCE DWG'S. BECHTEL NO.	PL. NO.
E-42	A-107191
8856-B21-128	FF114510
E-241 6	D-107330
E-301	D-107450

NO	DATE	REVISIONS	BY	CHKD	DESIGN SUPV	ENGR	PROJ ENGR	APPR
6	8/6/81	REV. REF DWG. Nº (DCR 42)	RMS	MCM 4CA	TC			
11	8/11/82	REISSUED "AS BUILT" INCRP'D FCN-E-3246	RMS	CJN MCM	TC			
10	5/14/82	ISSUED "AS BUILT"	RS	JKA	TC			
9	3/2/82	DELETED DCP 538 1E REV 1 PER SFR-2690	CJN	MCM	TC			
8	1/8/82	REVISED PER DCP 538 1E REV. 1	RMS	CJN	TC			
7	7/14	REVISED TO INCRP E-1055)	R	JKA	TC			
1	7/31/81	ISSUED FOR CONSTRUCTION	RMS	CJN MCM	TC			

SCALE NONE | DESIGNED B. CHOW | DRAWN R. FONG

PENNSYLVANIA POWER & LIGHT COMPANY
ALLENTOWN, PENNSYLVANIA
SUSQUEHANNA STEAM ELECTRIC STATION - UNIT 1, UNIT 2

BECHTEL - SAN FRANCISCO

SCHEMATIC DIAGRAM
NUCLEAR BOILER HEAD VENT VALVES
UNIT 1

JOB No.	DRAWING No.	REV.
8856	E-181 SH 1	11
D-107330 SH 1		

22 x 34 "D" SIZE

Doc. Control # 830322011751
Date 3/10/83 of Document:
REGULATORY DOCKET FILE

UNCONTROLLED DOCUMENT FOR REFERENCE ONLY

EDWARD K. KANG REGISTERED PROFESSIONAL ENGINEER 17530-E COMMONWEALTH OF PENNSYLVANIA 4/3/85

G1T01 SCHEME HEAD VENT VALVES W

24X

I certify that the microfilmed image contained on this microform was made in the normal and regular course of business. This is a true, full, correct and complete reproduction and replacement for and/or in lieu of original documents processed by the Bechtel group of companies.
Signature DANNY Date 8-25-82 MRG 1
Camera Operator

D

This drawing and the design it covers are the property of BECHTEL. They are issued upon the borrower's express agreement that they will not be reproduced, copied, loaned, exhibited, nor used except in the limited way and private use permitted by any written consent given by this borrower.

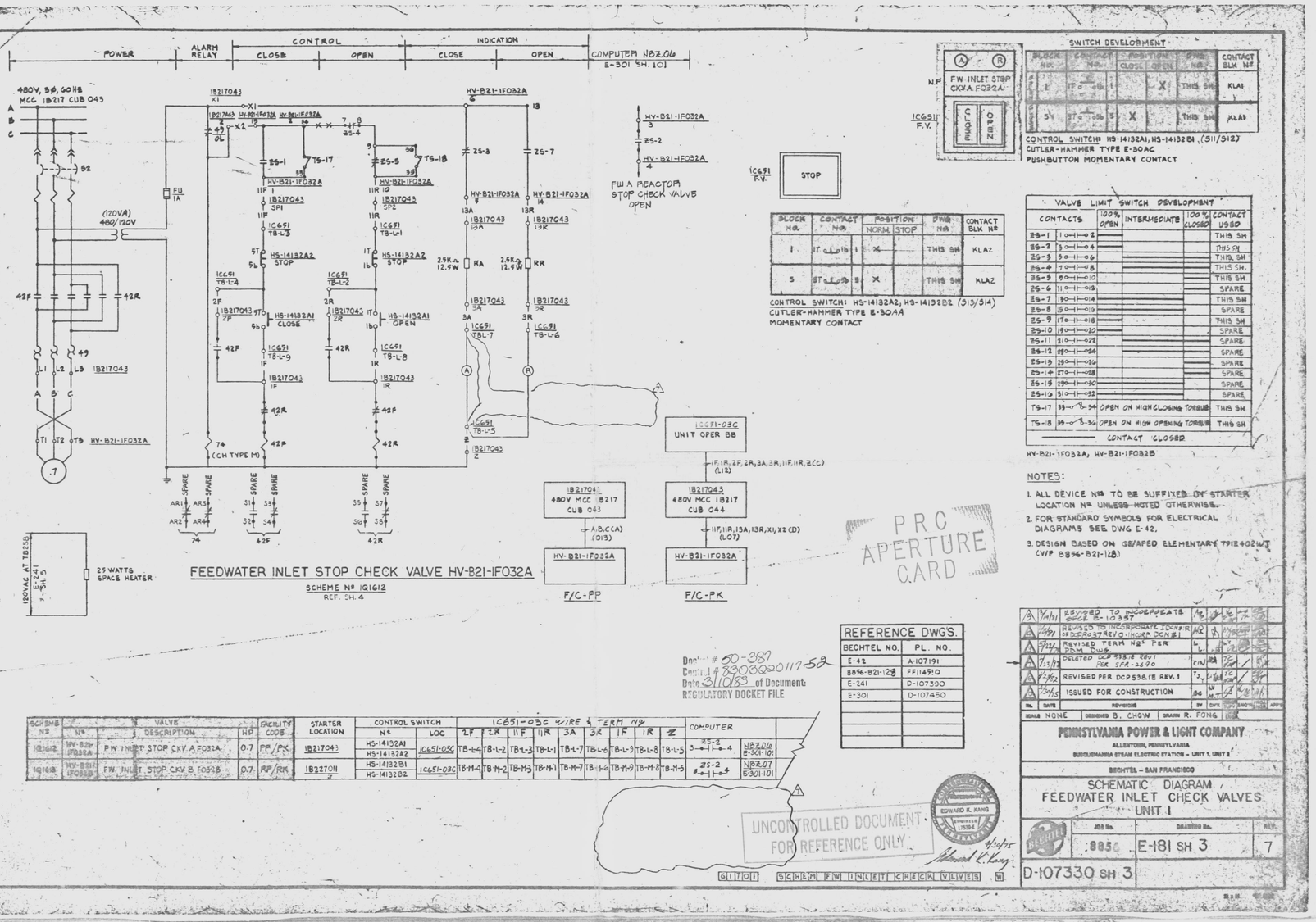

BLOCK Nº	CONTACT Nº	POSITION CLOSE	POSITION OPEN	THIS Nº	CONTACT BLK Nº
1	1T to 1b		X	THIS SH.	KLA1
5	5T to 5b	X		THIS SH.	KLA1

CONTROL SWITCH: HS-14132A1, HS-14132B1 (511/512)
CUTLER-HAMMER TYPE E-30AC
PUSHBUTTON MOMENTARY CONTACT

BLOCK Nº	CONTACT Nº	POSITION NORM.	POSITION STOP	THIS Nº	CONTACT BLK Nº
1	1T to 1b	X		THIS SH.	KLA2
5	5T to 5b	X		THIS SH.	KLA2

CONTROL SWITCH: HS-14132A2, HS-14132B2 (513/514)
CUTLER-HAMMER TYPE E-30AA
MOMENTARY CONTACT

VALVE LIMIT SWITCH DEVELOPMENT

CONTACTS		100% OPEN	INTERMEDIATE	100% CLOSED	CONTACT USED
Z5-1	1O—1—O2				THIS SH
Z5-2	3O—1—O4				THIS SH
Z5-3	5O—1—O6				THIS SH.
Z5-4	7O—1—O8				THIS SH.
Z5-5	9O—1—O10				THIS SH
Z5-6	11O—1—O12				SPARE
Z5-7	13O—1—O14				THIS SH
Z5-8	15O—1—O16				SPARE
Z5-9	17O—1—O18				THIS SH
Z5-10	19O—1—O20				SPARE
Z5-11	21O—1—O22				SPARE
Z5-12	23O—1—O24				SPARE
Z5-13	25O—1—O26				SPARE
Z5-14	27O—1—O28				SPARE
Z5-15	29O—1—O30				SPARE
Z5-16	31O—1—O32				SPARE
TS-1T	33—O 3—34	OPEN ON HIGH CLOSING TORQUE			THIS SH
TS-1B	35—O 3—36	OPEN ON HIGH OPENING TORQUE			THIS SH
	CONTACT CLOSED				

HV-B21-1F032A, HV-B21-1F032B

NOTES:

1. ALL DEVICE Nºs TO BE SUFFIXED BY STARTER LOCATION Nº UNLESS NOTED OTHERWISE.
2. FOR STANDARD SYMBOLS FOR ELECTRICAL DIAGRAMS SEE DWG E-42.
3. DESIGN BASED ON GE/APED ELEMENTARY 791E402WJ CWP B896-B21-1(B)

SCHEME Nº	Nº	VALVE DESCRIPTION	HP	FACILITY CODE	STARTER LOCATION	CONTROL SWITCH Nº	CONTROL SWITCH LOC	IC651-03C WIRE & TERM Nº 1F	2R	11F	11R	3A	3R	1F	1R	2E	COMPUTER	
1G1612	HV-B21-1F032A	FW INLET STOP CKV A F032A	0.7	PP/PK	1B217043	HS-14132A1 HS-14132A2	IC651-03C	TB-L4	TB-L2	TB-L3	TB-L1	TB-L7	TB-L6	TB-L9	TB-L8	TB-L5	3—1—4 Z5-2	N8Z06 E-301-101
1G1613	HV-B21-1F032B	FW INLET STOP CKV B F032B	0.7	PP/PK	1B227011	HS-14132B1 HS-14132B2	IC651-03C	TB-M-4	TB-M-2	TB-M-3	TB-M-1	TB-M-7	TB-M-6	TB-M-9	TB-M-8	TB-M-5	5—1—6 Z5-2	N8Z07 E-301-101

REFERENCE DWGS.	
BECHTEL NO.	PL. NO.
E-42	A-107191
B896-B21-128	FF114910
E-241	D-107390
E-301	D-107450

A	9/10/81	REVISED TO INCORPORATE DCP 538	KE			
A	7/7/81	REVISED TO INCORPORATE DCP 538 REV. 1 & DCN 37 REVO. INCOR. DCN 81	MK			
A	5/22/81	REVISED TERM Nºs PER PDM DWG.	L			
A	1/15/81	DELETED DCP 538.1E REV. 1 PER SPR-2690	CIN			
A	12/15/80	REVISED PER DCP 538.1E REV. 1	TJ			
A	12/04/80	ISSUED FOR CONSTRUCTION	SG			
NO.	DATE	REVISIONS	BY	CHK.	ENGR.	APP'D

SCALE NONE | DESIGNED B. CHOW | DRAWN R. FONG | CHK.

PENNSYLVANIA POWER & LIGHT COMPANY
ALLENTOWN, PENNSYLVANIA
SUSQUEHANNA STEAM ELECTRIC STATION – UNIT 1, UNIT 2
BECHTEL – SAN FRANCISCO

SCHEMATIC DIAGRAM
FEEDWATER INLET CHECK VALVES
UNIT 1

JOB No.	DRAWING No.	REV.
9850	E-181 SH 3	7
D-107330 SH 3		

Docket # 50-387
Control # 8303220117-52
Date 3/10/83 of Document:
REGULATORY DOCKET FILE

PRC APERTURE CARD

UNCONTROLLED DOCUMENT FOR REFERENCE ONLY

EDWARD K. KANG REGISTERED 17530 4/6/83

I hereby attest the microfilmed image contained on this microform were made in the normal and regular course of business. This is a true, full, correct and complete reproduction and replacement for and/or in lieu of original documents of the Bechtel group of companies.

DANNY Date 2-24-83 Camera Type MRG 1

24X

D

This drawing and the design it covers are the property of BECHTEL. They are issued upon the borrower's express agreement that they will not be reproduced, copied, loaned, exhibited, nor used except in the limited way and private use permitted by any written consent given by this borrower.

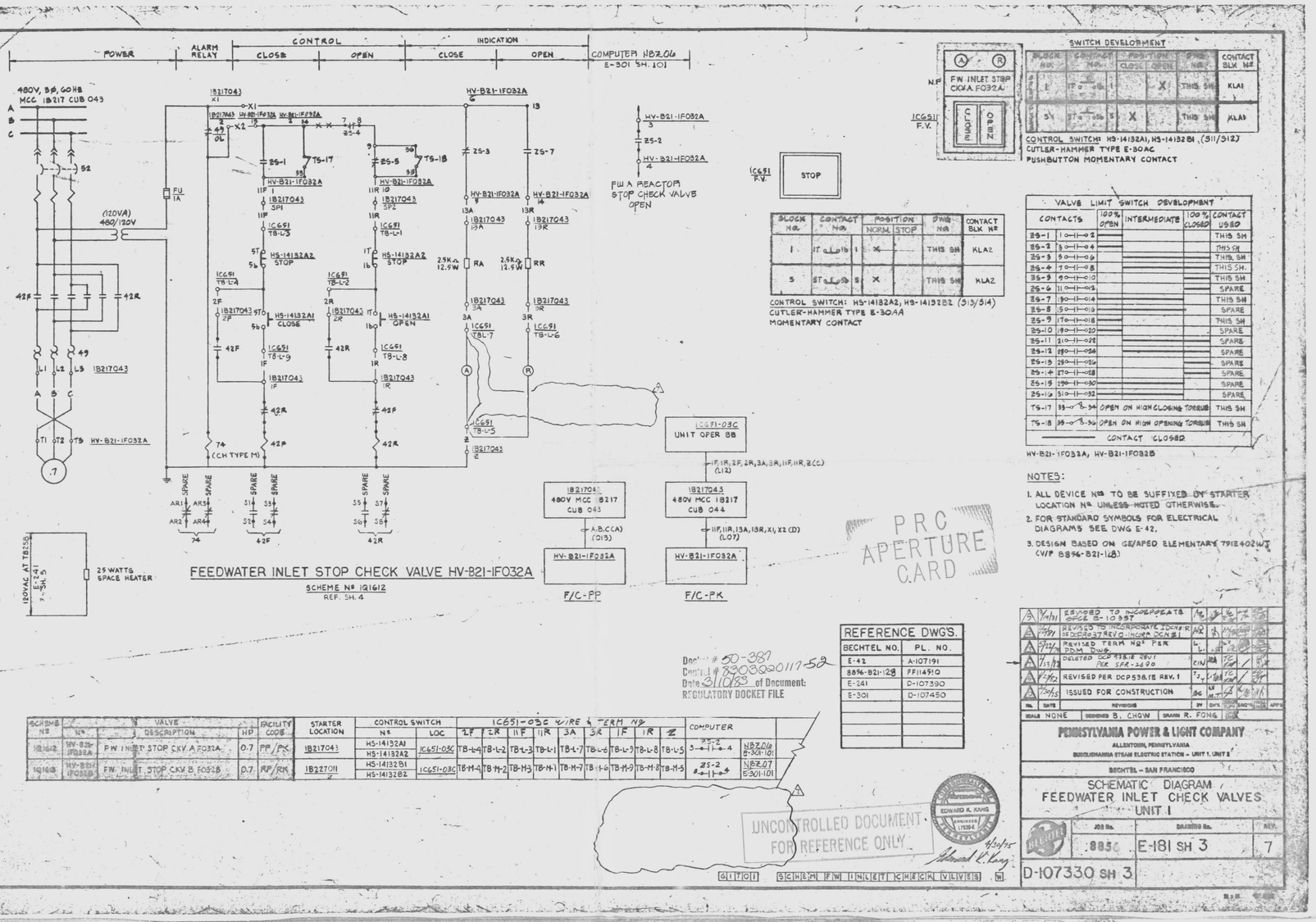

BLOCK Nº	CONTACT Nº	POSITION CLOSE	POSITION OPEN	THIS Nº	CONTACT BLK Nº
1	1T to 1b		X	THIS SH.	KLA1
5	5T to 5b	X		THIS SH.	KLA1

CONTROL SWITCH: HS-14132A1, HS-14132B1 (511/512)
CUTLER-HAMMER TYPE E-30AC
PUSHBUTTON MOMENTARY CONTACT

BLOCK Nº	CONTACT Nº	POSITION NORM.	POSITION STOP	THIS Nº	CONTACT BLK Nº
1	1T to 1b	X		THIS SH.	KLA2
5	5T to 5b	X		THIS SH.	KLA2

CONTROL SWITCH: HS-14132A2, HS-14132B2 (513/514)
CUTLER-HAMMER TYPE E-30AA
MOMENTARY CONTACT

VALVE LIMIT SWITCH DEVELOPMENT

CONTACTS		100% OPEN	INTERMEDIATE	100% CLOSED	CONTACT USED
Z5-1	1O—1—O2				THIS SH
Z5-2	3O—1—O4				THIS SH
Z5-3	5O—1—O6				THIS SH.
Z5-4	7O—1—O8				THIS SH.
Z5-5	9O—1—O10				THIS SH
Z5-6	11O—1—O12				SPARE
Z5-7	13O—1—O14				THIS SH
Z5-8	15O—1—O16				SPARE
Z5-9	17O—1—O18				THIS SH
Z5-10	19O—1—O20				SPARE
Z5-11	21O—1—O22				SPARE
Z5-12	23O—1—O24				SPARE
Z5-13	25O—1—O26				SPARE
Z5-14	27O—1—O28				SPARE
Z5-15	29O—1—O30				SPARE
Z5-16	31O—1—O32				SPARE
TS-1T	33—O 3—34	OPEN ON HIGH CLOSING TORQUE			THIS SH
TS-1B	35—O 3—36	OPEN ON HIGH OPENING TORQUE			THIS SH
	CONTACT CLOSED				

HV-B21-1F032A, HV-B21-1F032B

NOTES:

1. ALL DEVICE Nºs TO BE SUFFIXED BY STARTER LOCATION Nº UNLESS NOTED OTHERWISE.
2. FOR STANDARD SYMBOLS FOR ELECTRICAL DIAGRAMS SEE DWG E-42.
3. DESIGN BASED ON GE/APED ELEMENTARY 791E402WJ CWP B896-B21-1(B)

SCHEME Nº	Nº	VALVE DESCRIPTION	HP	FACILITY CODE	STARTER LOCATION	CONTROL SWITCH Nº	CONTROL SWITCH LOC	IC651-03C WIRE & TERM Nº 1F	2R	11F	11R	3A	3R	1F	1R	2E	COMPUTER	
1G1612	HV-B21-1F032A	FW INLET STOP CKV A F032A	0.7	PP/PK	1B217043	HS-14132A1 HS-14132A2	IC651-03C	TB-L4	TB-L2	TB-L3	TB-L1	TB-L7	TB-L6	TB-L9	TB-L8	TB-L5	3—1—4 Z5-2	N8Z06 E-301-101
1G1613	HV-B21-1F032B	FW INLET STOP CKV B F032B	0.7	PP/PK	1B227011	HS-14132B1 HS-14132B2	IC651-03C	TB-M-4	TB-M-2	TB-M-3	TB-M-1	TB-M-7	TB-M-6	TB-M-9	TB-M-8	TB-M-5	5—1—6 Z5-2	N8Z07 E-301-101

REFERENCE DWGS.	
BECHTEL NO.	PL. NO.
E-42	A-107191
B896-B21-128	FF114910
E-241	D-107390
E-301	D-107450

A	9/10/81	REVISED TO INCORPORATE DCP 538	KE			
A	7/7/81	REVISED TO INCORPORATE DCP 538 REV. 1 & DCN 37 REVO. INCOR. DCN 81	MK			
A	5/22/81	REVISED TERM Nºs PER PDM DWG.	L			
A	1/15/81	DELETED DCP 538.1E REV. 1 PER SPR-2690	CIN			
A	12/15/80	REVISED PER DCP 538.1E REV. 1	TJ			
A	12/04/80	ISSUED FOR CONSTRUCTION	SG			
NO.	DATE	REVISIONS	BY	CHK.	ENGR.	APP'D

SCALE NONE | DESIGNED B. CHOW | DRAWN R. FONG | CHK.

PENNSYLVANIA POWER & LIGHT COMPANY
ALLENTOWN, PENNSYLVANIA
SUSQUEHANNA STEAM ELECTRIC STATION – UNIT 1, UNIT 2
BECHTEL – SAN FRANCISCO

SCHEMATIC DIAGRAM
FEEDWATER INLET CHECK VALVES
UNIT 1

JOB No.	DRAWING No.	REV.
9850	E-181 SH 3	7
D-107330 SH 3		

Docket # 50-387
Control # 8303220117-52
Date 3/10/83 of Document:
REGULATORY DOCKET FILE

PRC APERTURE CARD

UNCONTROLLED DOCUMENT FOR REFERENCE ONLY

EDWARD K. KANG REGISTERED 17530 4/6/83

I hereby attest the microfilmed image contained on this microform were made in the normal and regular course of business. This is a true, full, correct and complete reproduction and replacement for and/or in lieu of original documents of the Bechtel group of companies.

DANNY Date 2-24-83 Camera Type MRG 1

24X

D

This drawing and the design it covers are the property of BECHTEL. They are merely loaned and on the borrower's express agreement that they will not be reproduced, copied, loaned, exhibited, nor used except in the limited way and private use permitted by any written consent given by the lender or his borrower.

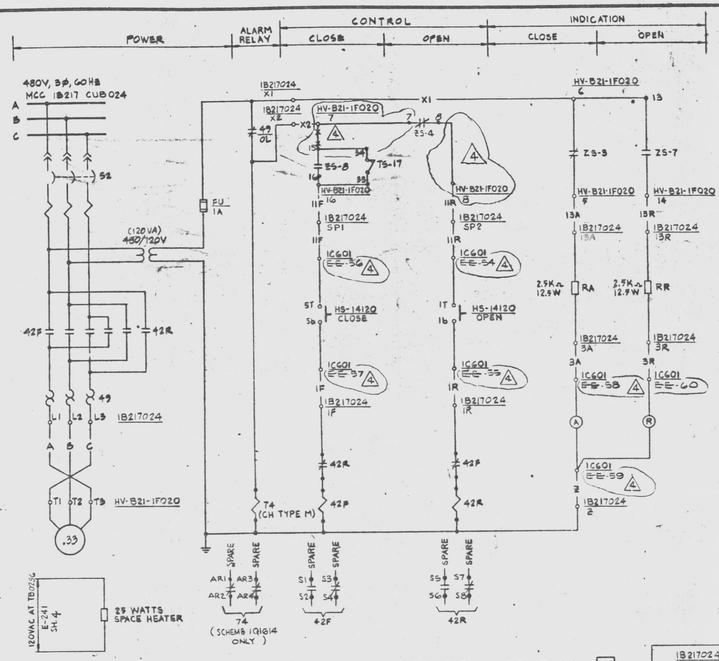

STEAM LINE WARM UP HV-B21-1F020 [1]

SCHEME Nº 1Q1614
REF. SH. 4

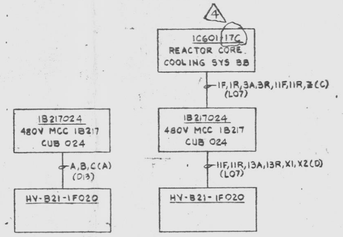

SCHEME Nº	VALVE NO.	VALVE DESCRIPTION	HP	FACILITY CODE	STARTER LOC.	CONTROL SWITCH Nº	CONTROL SWITCH LOC.	1C601 WIRE (TERMINAL NOS.) 1F	1R	3A	3R	11F	11R	2	COMPUTER
1Q1614	HV-B21-1F020	STM LINE WARM UP FO20	.33	EP/EK	1B217024	HS-14120	1C601-117C	EE-57	EE-55	EE-58	EE-60	EE-56	EE-54	EE-59	3-25-2 4 E-501 SH.101 NB204
1Q1615	HV-B21-1F021	STM LINE DRAIN TO CDSR FO21	.33	NP/NR	1B262082	HS-14121	1C601-202C	LL-38	LL-36	LL-39	LL-41	LL-37	LL-35	LL-40	4-25-6 12 E-501 SH.101 NB205

COMPUTER NB204 [1]
E-301, SH.101

HV-B21-1F020 3
ZS-2
HV-B21-1F020 4
MAIN STEAM WARMUP VALVE OPEN

NP
STEAM LINE WARM UP FO20
1C601 F.V.
CLOSE
OPEN

SWITCH DEVELOPMENT

BLOCK NO.	CONTACT NO.	POSITION - CLOSE	POSITION - OPEN	DWG NO.	CONTACT 3LK Nº
1	1T o o 6		X	THIS SH	KLA1
5	5T o o 8	X		THIS SH	KLA1

CONTROL SWITCH: HS-14120, HS-14121
CUTLER-HAMMER TYPE E-30AC
PUSHBUTTON MOMENTARY CONTACT

VALVE LIMIT SWITCH DEVELOPMENT

CONTACTS	100% OPEN	INTERMEDIATE	100% CLOSED	CONTACT USED
ZS-1	1 o—o 2			SPARE
ZS-2	3 o—o 4			THIS SH
ZS-3	5 o—o 6			THIS SH
ZS-4	7 o—o 8			THIS SH
ZS-5	9 o—o 10			SPARE [4]
ZS-6	11 o—o 12			SPARE [4]
ZS-7	13 o—o 14			THIS SH
ZS-8	15 o—o 16			THIS SH
ZS-9	17 o—o 18			SPARE
ZS-10	19 o—o 20			SPARE
ZS-11	21 o—o 22			SPARE
ZS-12	23 o—o 24			SPARE
ZS-13	25 o—o 26			SPARE
ZS-14	27 o—o 28			SPARE
ZS-15	29 o—o 30			SPARE
ZS-16	31 o—o 32			SPARE
TS-17	33 o—o 34			OPEN ON HIGH CLOSING TORQUE THIS SH
TS-18	33 o—o 36			OPEN ON HIGH OPENING TORQUE SPARE [4]

CONTACT CLOSED

HV-B21-1F020, HV-B21-1F021

NOTES:

1. ALL DEVICE Nº TO BE SUFFIXED BY STARTER LOCATION Nº UNLESS NOTED OTHERWISE.
2. FOR STANDARD SYMBOLS FOR ELECTRICAL DIAGRAMS SEE DWG E-42.
3. DESIGN BASED ON GE/APED ELEMENTARY 791E402WJ (W/P 8856-B21-128).

PRC APERTURE CARD

UNCONTROLLED DOCUMENT FOR REFERENCE ONLY

REFERENCE DWG'S.	
BECHTEL NO.	PL. NO.
E-42	A-107191
8856-B21-128 [4]	FF114910

NO.	DATE	REVISIONS	BY	CHK	ENG'G	APP'D
5	3/6/14	INC IDCN 1 (GEP 008-42, ROSFER E-2044 & E-3715; DCN 1 OF 1 &2)	SS			
4	3/3/14	PER PSR & E. E&M. DIAG FOS NO WJ&L	LL			
3	2/27/14	REVISED NAMEPLATE AND ADDED PER DWG	MDS			
2	1/4/14	ADDED LIMIT SW. TO OPEN CKT.	SS			
1	12/3/13	ISSUED FOR CONSTRUCTION	BC			

SCALE NONE | DESIGNED B. CHOW | DRAWN R. FONG

PENNSYLVANIA POWER & LIGHT COMPANY
ALLENTOWN, PENNSYLVANIA
SUSQUEHANNA STEAM ELECTRIC STATION – UNIT 1, UNIT 2

BECHTEL – SAN FRANCISCO

SCHEMATIC DIAGRAM
STEAM LINE EQUALIZER AND DRAIN VALVES UNIT 1

JOB No.	DRAWING No.	REV.
8856	E-181 SH 5	4

D-107330 SH 5

Docket #50-387
Control #8308300117-83
Date 8/10/83 of Document:
REGULATORY DOCKET FILE

EDWARD K. KANG
REGISTERED 17530

G1T01 SCHEM STM LINE EQUALIZER V

24X

I certify that the microfilmed image contained on this microform were made in the normal and regular course of business. This is a true, full, correct and complete reproduction and replacement for and/or in lieu of original documents generated by the Bechtel group of companies.
Signed DANNY Date 8-10-91 Camera Type
Camera Operator

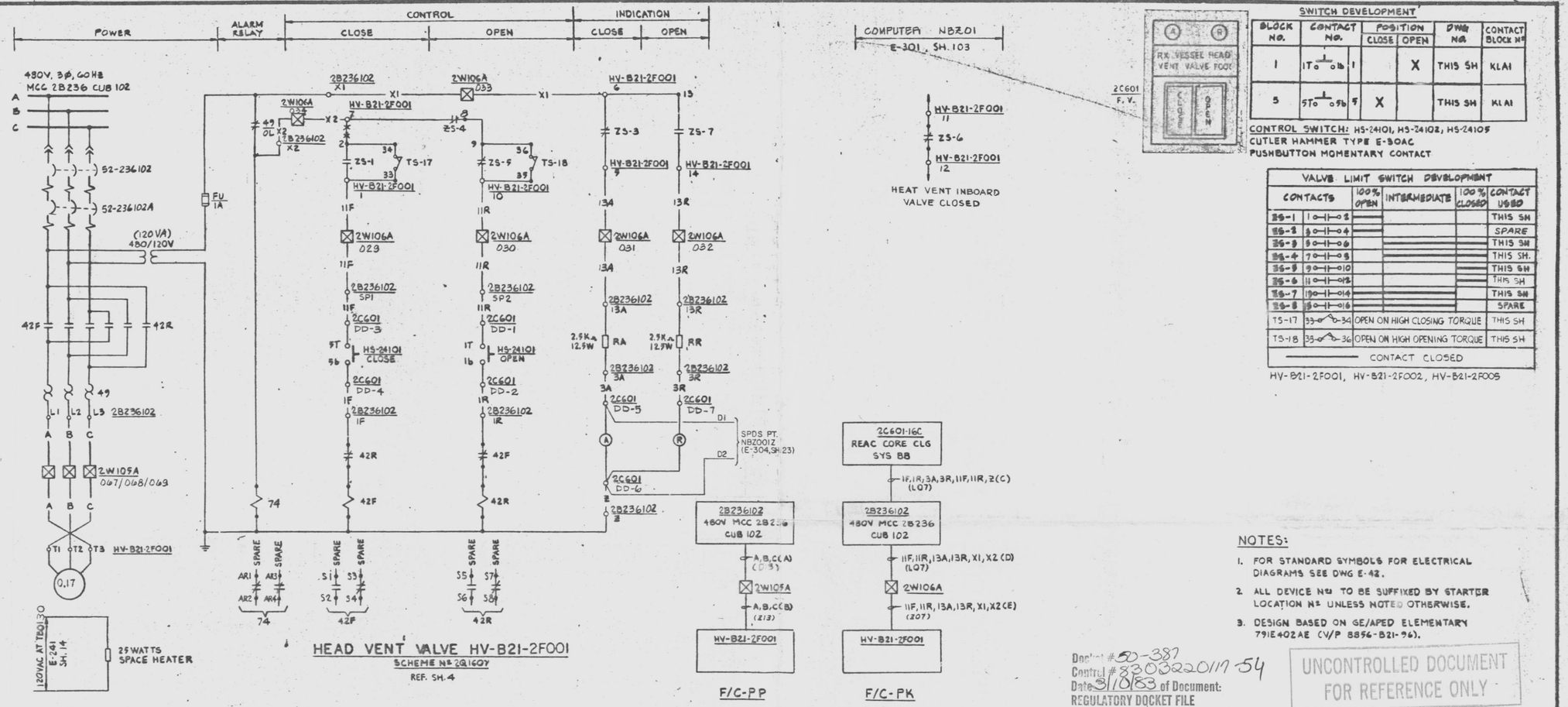

SWITCH DEVELOPMENT

BLOCK NO.	CONTACT NO.	POSITION CLOSE	POSITION OPEN	DWG NO.	CONTACT BLOCK Nº
1	1T o—o 1b	1	X	THIS SH	KLA1
5	5T o—o 5b	5	X	THIS SH	KLA1

CONTROL SWITCH: HS-24101, HS-24102, HS-24105
CUTLER HAMMER TYPE E-30AC
PUSHBUTTON MOMENTARY CONTACT

VALVE LIMIT SWITCH DEVELOPMENT

CONTACTS		100% OPEN	INTERMEDIATE	100% CLOSED	CONTACT USED
Z5-1	1o—o2	—		—	THIS SH
Z5-2	3o—o4	—		—	SPARE
Z5-3	5o—o6	—		—	THIS SH
Z5-4	7o—o8	—		—	THIS SH.
Z5-5	9o—o10	—		—	THIS SH
Z5-6	11o—o12	—		—	THIS SH
Z5-7	13o—o14	—		—	THIS SH
Z5-8	15o—o16	—		—	SPARE
TS-17	33o—o34	OPEN ON HIGH CLOSING TORQUE			THIS SH
TS-18	35o—o36	OPEN ON HIGH OPENING TORQUE			THIS SH
	CONTACT CLOSED				

HV-B21-2F001, HV-B21-2F002, HV-B21-2F005

NOTES:

1. FOR STANDARD SYMBOLS FOR ELECTRICAL DIAGRAMS SEE DWG E-42.
2. ALL DEVICE Nº TO BE SUFFIXED BY STARTER LOCATION Nº UNLESS NOTED OTHERWISE.
3. DESIGN BASED ON GE/APED ELEMENTARY 791E402AE (V/P 8856-B21-96).

SCHEME Nº	VALVE Nº	VALVE DESCRIPTION	HP	FACILITY CODE	STARTER LOCATION	CONTROL SWITCH Nº	CONTROL SWITCH LOC	2C601-16C WIRE & TERMINAL Nºs 1F	1R	3A	3R	11F	11R	Z	PENETRATION CONTROL	TERMINAL Nº.	POWER	TERM Nº.
2Q1607	HV-B21-2F001	RX VESSEL HEAD VENT VALVE FOOI	.17	PP/PK	2B236102	HS-24101	2C601-16C	DD-04	DD-02	DD-05	DD-07	DD-03	DD-01	DD-06	2W106A	029 030 031 032 033 034	2W105A	067 068 069
2Q1608	HV-B21-2F002	RX VESSEL HEAD VENT VALVE FOO2	.17	RP/RK	2B246112	HS-24102	2C601-16C	AA-31	AA-29	AA-34	AA-33	AA-30	AA-28	AA-32	2W106B	043 044 045 046 047 048	2W105B	070 071 072
2Q1609	HV-B21-2F005	RX VESSEL HEAD VENT VALVE FOO5	.17	RP/RK	2B246113	HS-24105	2C601-16C	AA-38	AA-36	AA-39	AA-43	AA-37	AA-35	AA-44	2W106B	050 051 052 053 054 055	2W105B	073 074 075

COMPUTER	CKT. BREAKER		MOTOR HEATER POWER SUPPLY	SPDS PT.	SPDS WIRE NO.	SPDS REF. NO.
NBZ01 / E-301-103 HV-B21-2F001/Z5-6	52-236102	52-236102A	TB0130 E-241 SH.14	NBZ001Z	D1, D2	E-304,SH.23
NBZ02/E-301-103 HV-B21-2F002/Z5-6	52-246112	52-246112A	TB0130 E-241 SH.14	NBZ002Z	J1, J2	E-304,SH.23
NBZ03/E-301-103 HV-B21-2F005/Z5-6	52-246113	52-246113A	TB0130 E-241 SH.14	NBZ003Z	J3, J4	E-304,SH.23

REFERENCE DWG'S. BECHTEL NO.	PL. NO.
E-42	A-107191
8856-B21-96	FF114510
E-241	D-107390
E-301	D-107450

NO.	DATE	REVISIONS	BY	CHKD	NUCLEAR SUPV	ENGR	PROJ ENGR	APPD
3	11/4/82	REVISED PER DCP 538-2E REV.1 INCORP FCR E-6745 CLARIFIED HV-B21-2F001 CONN. FROM TB0141 TO TB0130 PER E-241 SH 14 (DCN-9)	NG					
4	4/14/82	IN REV. 4 FCN. E-3383 SHOULD READ FCN. E-3381 (FOR DOC ONLY DRAWN	VAK					
5	4/15/82	REV TO INCORP FCN E-3383	JAC					
6	3/3/83	ISSUED FOR CONSTRUCTION	SAV	GW	GW			

SCALE NONE | DESIGNED S. SHIM | DRAWN M.H YOUNG | CHIEF ENGR

PENNSYLVANIA POWER & LIGHT COMPANY
ALLENTOWN, PENNSYLVANIA
SUSQUEHANNA STEAM ELECTRIC STATION - UNIT 1, UNIT 2
BECHTEL - SAN FRANCISCO

SCHEMATIC DIAGRAM NUCLEAR BOILER HEAD VENT VALVES UNIT 2

JOB No.	DRAWING No.	REV.
8856	E-181 SH. 8	5

D-107330 SH.8

G2T01 SCHEME HEAD VENT VALVES W

Docket #50-387
Control #8303220117-54
Date 3/18/83 of Document:
REGULATORY DOCKET FILE

UNCONTROLLED DOCUMENT FOR REFERENCE ONLY

PRC APERTURE CARD

This drawing and the design it covers are the property of BECHTEL. They are merely loaned and on the borrower's express agreement that they will not be reproduced, copied, loaned, exhibited, nor used except in the limited way and private use permitted by any written consent given by the lender to the borrower.

D

24X
I certify that the microfilmed image contained on this microform were made in the normal and regular course of business. This is a true, full, correct and complete reproduction and replacement for and/or in lieu of original documents prepared by the Bechtel group of companies.
Camera Operator P.AKINS Date 10-19-82 Camera Type MRG 1

This drawing and the design it covers are the property of BECHTEL. They are merely loaned and on the borrower's express agreement that they will not be reproduced, copied, loaned, exhibited, nor used except in the limited way and private use permitted by any written consent given by the lender to the borrower.

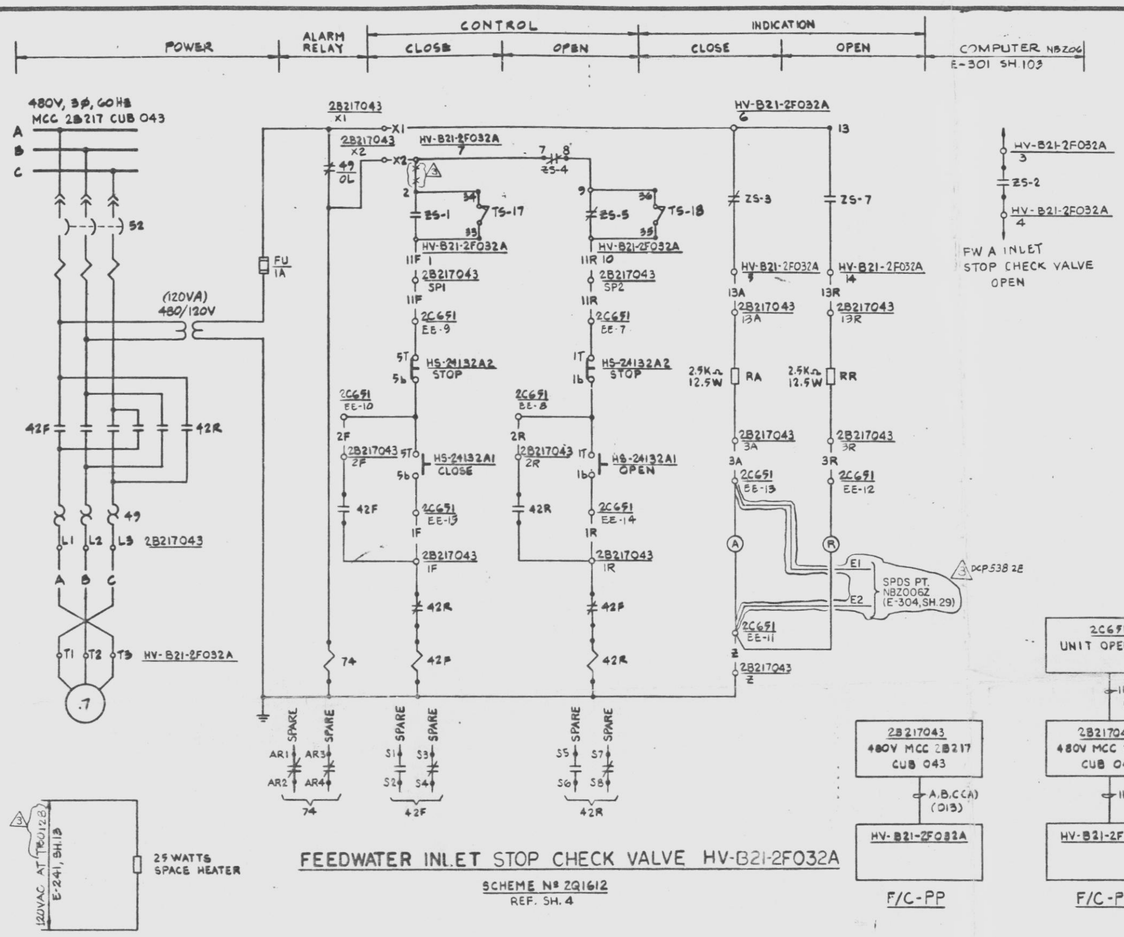

NOTES:

1. ALL DEVICE Nºs TO BE SUFFIXED BY STARTER LOCATION Nº UNLESS NOTED OTHERWISE.
2. FOR STANDARD SYMBOLS FOR ELECTRICAL DIAGRAMS SEE DWG E-42.
3. DESIGN BASED ON GE/APED ELEMENTARY 791E402AE (V/P 8856-B21-96)

UNCONTROLLED DOCUMENT FOR REFERENCE ONLY

Docket # 50-387
Control # 8303220117-55
Date 3/10/83 of Document:
REGULATORY DOCKET FILE

REFERENCE DWG'S.	
BECHTEL NO.	PL. NO.
E-42	A-107191
8856-B21-96	FF114510
E-241	D-107390
E-301	D-107450

SCHEME Nº	VALVE Nº	VALVE DESCRIPTION	HP	FACILITY CODE	STARTER LOCATION	CONTROL SWITCH Nº	CONTROL SWITCH LOC	2C651-03C WIRING & TERM. Nº'S 2F	2R	11F	11R	3A	3R	1F	1R	Z	COMPUTER	SPACE HTR POWER SUPPLY
2Q1612	HV-B21-2F032A	FW INLET STOP CKV A F032A	0.7	PP/PK	2B217043	HS-24132A1 HS-24132A2	2C651-03C	EE-10	EE-8	EE-9	EE-7	EE-13	EE-12	EE-15	EE-14	EE-11	ZS-2 3-11-04	NBZ06 E-301-103	TB0942 E-241 SH.13
2Q1613	HV-B21-2F032B	FW INLET STOP CKV B F032B	0.7	RP/RK	2B227011	HS-24132B1 HS-24132B2	2C651-03C	TB-E-3	TB-E-4	TB-E-7	TB-E-8	TB-E-5	TB-E-6	TB-E-1	TB-E-2	TB-E-9	ZS-2 3-11-04	NBZ07 E-301-103	TB0942 E-241 SH.13

3 DCP 5388 2B

SPDS		
PT.	WIRE NO.	REF. NO.
NBZ006Z	E1, E2	E-304, SH 29
NBZ007Z	D1, D2	E-304, SH 29

PRC APERTURE CARD

4	7/21/82	REVISED PER DCP 5388 2B, REV. J, DCP 5388 2B, REV. K	TAK NG				
3	12/29/81	REVISED TERMINAL NO. (DCR 9)	PK				
2	11/4/81	ADDED COMPUTER INPUT AND HTR SPACE HTR REF DWG. (DCR 9)	MB	BBL			
1	3/3/77	ISSUED FOR CONSTRUCTION	SS				
No.	DATE	REVISIONS	BY	CHK'D	ENG'R	CHIEF	APP'D

SCALE NONE DESIGNED J. SHIM DRAWN M.H. YOUNG

PENNSYLVANIA POWER & LIGHT COMPANY
ALLENTOWN, PENNSYLVANIA
SUSQUEHANNA STEAM ELECTRIC STATION – UNIT 1, UNIT 2

BECHTEL – SAN FRANCISCO

SCHEMATIC DIAGRAM
FEEDWATER INLET CHECK VALVES
UNIT 2

JOB No.	DRAWING No.	REV.
8856	E-181 SH. 10	3

D-107330 SH10

G2T01 SCHEM FW INLET CHECK VLVES W

D

24X

I certify that the microfilmed image contained on this microform were made in the normal and regular course of business. This is a true, full, correct and complete reproduction and replacement for and/or in lieu of original documents generated by the Bechtel group of companies.
Signed DANNY Camera Operator Date 2/23/82 Camera Type MRG I

This drawing and the design it covers are the property of BECHTEL. They are merely loaned and on the borrower's express agreement that they will not be reproduced, copied, loaned, exhibited, or used except in the limited way and private use permitted by any written consent given by the lender to the borrower.

UNCONTROLLED DOCUMENT
FOR REFERENCE ONLY

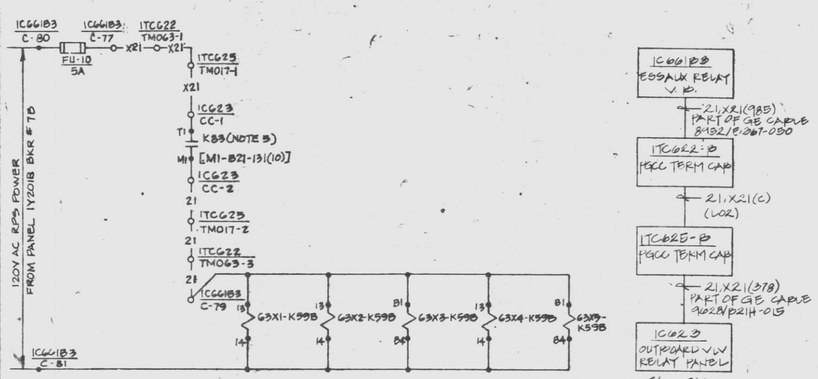

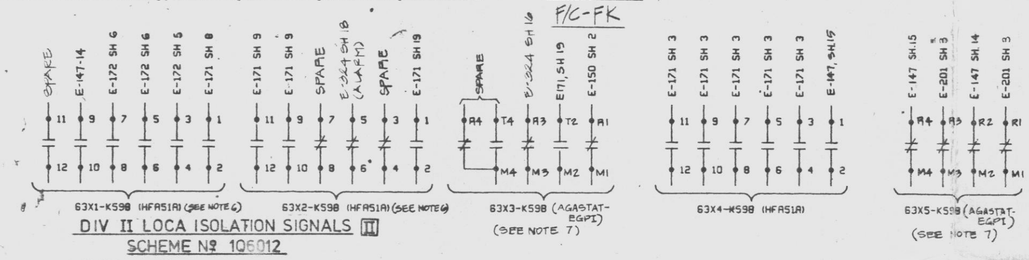

DIV II LOCA ISOLATION SIGNALS [II]
SCHEME Nº 106012

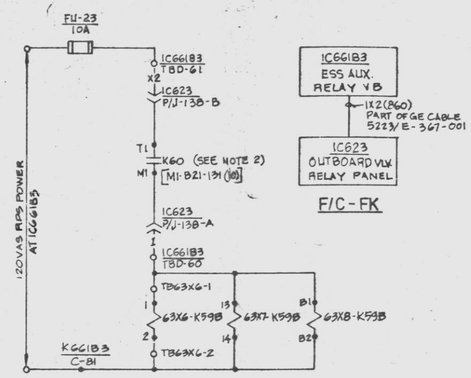

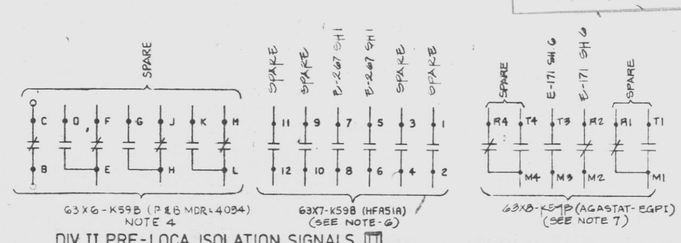

DIV II PRE-LOCA ISOLATION SIGNALS [II]
SCHEME Nº 106002

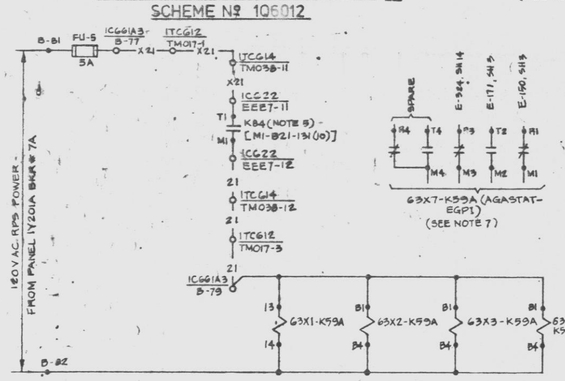

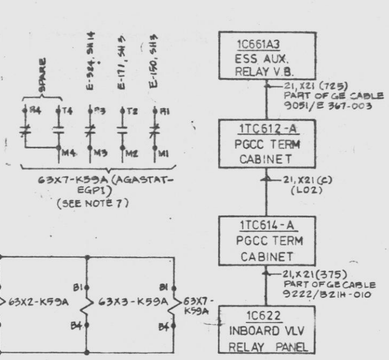

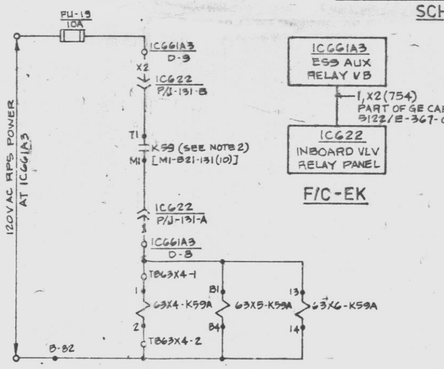

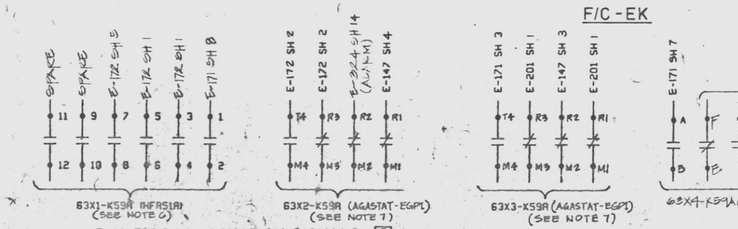

DIV I LOCA ISOLATION SIGNALS [I]
SCHEME Nº 106011

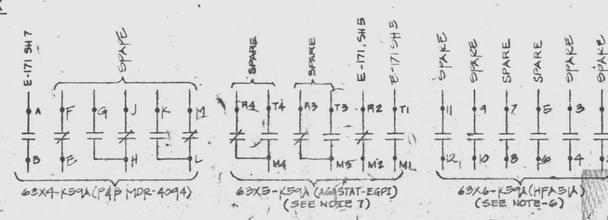

DIV I PRE-LOCA ISOLATION SIGNALS [I]
SCHEME Nº 106001

NOTES:
1. FOR STANDARD SYMBOLS FOR ELECTRICAL DIAGRAMS SEE 8856-E-42
2. RELAY K59 / K60 DE-ENERGIZE ON
   (1) LOW WATER REACTOR LEVEL (TRIP LEVEL 3)
   (2) HIGH DRYWELL PRESSURE
   (3) MANUAL ISOLATION OR
   (4) SWITCH IN TEST MODE
3. DESIGN LOGIC LOGIC BASED ON GE FLD 76B2784AE (V/P 8856-M1-B21-92)
4. NON CLASS 1E WIRING & TERMINATIONS TO BE SEPARATED FROM CLASS 1E WIRING & TERMINATIONS WITH A MINIMUM OF 6 INCHES OR AN APPROVED BARRIER INSTALLED.
5. RELAY K83 & K84 DE-ENERGIZE ON
   (1) MANUAL ISOLATION
   (2) LO-LO WATER REACTOR LEVEL (TRIP LEVEL 2)
   (3) HI DRYWELL PRESSURE (1.69 PSIG) OR
   (4) SWITCH IN "TEST" MODE
6. CAUTION: DO NOT USE N.C. CONTACT OF THIS RELAY FOR CONTROL CIRCUIT INTERLOCK.

7 FIELD TO PURCHASE AND INSTALL RELAY AGASTAT TYPE-EGPI, REF. E-40 SH BW

Docket #50-387
Control # 8303290117-56
Date 3/10/83 of Document:
REGULATORY DOCKET FILE

THIS DOCUMENT IS UNDER PP&L ADMINISTRATIVE CONTROL. NO CHANGES CAN BE MADE WITHOUT PRIOR PP&L APPROVAL.

REFERENCE DWG'S.	
BECHTEL NO.	PL. NO.
E-42	A-107131
MI-B21-101	FF-114510
E-159	D-107308
E-172	D-107281
E-171	D-107320
E-201	D-107358
E-147	D-107298
E-150	D-107235
B-324	D-107473
MI-B21-131(10)	FF11 4510

NO.	DATE	REVISIONS	BY	CHK'D	DESIGN SUPV	ENG'G	PROJ. ENGR	APP'D
5	2/25/83	INCORP PER CCN'S 2CN-1182-P43 / 2CN-1182-P44 & 2CN-1182-P45 / 2CN-1182-P46 & 2CN-1182-P47	EAR	MJ	TC	GWM		
4	1/14/83	RE-ISSUED "AS BUILT" INCORP. FOR E-11239	VL	PJ	JB	LC		
3	9/17/81	ISSUED AS BUILT REVISED PER FCN E-11174 & DCR 42	PM	KH		JH		
2	1/13/81	BFI-28 WAS INCORP IN REV. 3 (W.A. 70)	PM	GT	TC	GWM		
1	10-14-75	ISSUED FOR CONSTRUCTION	AV	ED MIT	AB	GWM JR	MD. EK	

SCALE NONE | DESIGNED A. VAUSE | DRAWN

PENNSYLVANIA POWER & LIGHT COMPANY
ALLENTOWN, PENNSYLVANIA
SUSQUEHANNA STEAM ELECTRIC STATION – UNIT 1, UNIT 2

BECHTEL – SAN FRANCISCO

SCHEMATIC DIAGRAM
LOCA ISOLATION SIGNALS
UNIT 1

JOB No.	DRAWING No.	REV.
8856	E-184 SH 1	7

D-107333 SH 1

G1L20 SCHEM LOCA ISOLATION SIGS W

PRC APERTURE CARD
EDWARD K. KARN ENGINEER 17538

124X

I certify that the microfilmed image contained on this microform were made in the normal and regular course of business. This is a true, full, correct and complete reproduction and replacement for and/or in lieu of original documents generated by the Bechtel group of companies.
Signed: JACINTO Date 1/26/83 Camera Type MRC I
Camera Operator

8/75 DIP ARRANGEMENT NO. 2180.W009

This drawing and the design it covers are the property of BECHTEL. They are merely loaned and on the borrower's express agreement that they will not be reproduced, copied, loaned, exhibited, nor used except in the limited way and private use permitted by any written consent given by the lender to the borrower.

UNCONTROLLED DOCUMENT FOR REFERENCE ONLY

PRC APERTURE CARD

UNIT 1 AND COMMON PORTIONS OF THIS DRAWING ARE UNDER PP&L ADMINISTRATIVE CONTROL. NO CHANGES CAN BE MADE TO THESE PORTIONS WITHOUT PRIOR PP&L APPROVAL.

D.G."A" AUTO START RELAY PRIMARY CIRCUIT [A]

D.G."B" AUTO START RELAY PRIMARY CIRCUIT [B]

D.G."C" AUTO START RELAY PRIMARY CIRCUIT [C]

D.G."D" AUTO START RELAY PRIMARY CIRCUIT [D]

SCHEME 0Q6003

SCHEME 0Q6004

SCHEME 0Q6005

SCHEME 0Q6006

D.G."A" AUTO START RELAY BACK-UP CIRCUIT [A]

D.G."B" AUTO START RELAY BACK-UP CIRCUIT [B]

D.G."C" AUTO START RELAY BACK-UP CIRCUIT [C]

D.G."D" AUTO START RELAY BACK-UP CIRCUIT [D]

SCHEME 0Q6007

SCHEME 0Q6008

SCHEME 0Q6009

SCHEME 0Q6010

NOTES:

1. FOR STANDARD SYMBOLS FOR ELECTRICAL DIAGRAMS SEE 8856-E-42
2. RELAY CONTACTS OPEN ON EITHER (1) MANUAL INITIATION, (2) LOW REACTOR WATER LEVEL (3) HIGH DRYWELL PRESSURE THEN REMAIN(S) OPEN UNTIL SIGNAL DISAPPEARS AND "RESET" BUTTON IS PRESSED. REF. GE ELEMENTARY 791E419AE (V/P-8856-M1-E21-20). & GE FCD 7296E613AE (V/P-8856-M1-E21-3).
3. SAME AS NOTE 2 EXCEPT REF. GE ELEMENTARY 791E418AE (V/P-8856-M1-E11-29) & GE FCD 7296E630 (V/P-8856-M1-E11-1).
4. FOR D/G ENGINE CONTROL PANEL INTERNALS SEE V/P-8856-M30-124 (1) & (2).
5. DEVICE NO. IN PARENTHESES ARE VENDOR'S NO.
6. ROUTE THESE CABLES IN DUCT BANKS BETWEEN DG BLDG AND CONTROL BLDG.
7. JUMPER TO BE REMOVED WHEN UNIT 2 IS OPERATIONAL.

REFERENCE DWGS.	
BECHTEL NO.	PL NO.
E-42	A-107191
E-26	E-107175
E-259	D-107408
E-105	D-107254
M1-E21-20	FF-126510
M1-E21-3	FF-126510
M1-E11-29	FF-124510
M1-E11-1	FF-124510
M30-1240(1)(2)	FF-105800

NO.	DATE	REVISIONS	BY	CHK	DESIGN SUPV.	ENG.	PROJ. MGR.	APP'D
A	7/31/84	ADD'D SCH 0Q6010 (SCR 42), INC. ALT. & 4160 V BUS TRANSFER & 4160 V BUS "A2-B" & "A2-C" TRANSFER & 4160 V BUS "A2-D" TRANSFER, ISSUED UNIT 1 & COMMON	ENG	[illegible]	TC			
A	7/12/84	REV TO INCORP ECR E-4341	RS	[illegible]	TC			
A	7/27/84	REV'D PGCC TERM CAB (SCR 42,	R.A.	[illegible]	[illegible]			
A	1/18/84	ADDED TERMINAL N2S	[illegible]	[illegible]	[illegible]			
A	3/14/83	ISSUED FOR CONSTRUCTION	[illegible]	[illegible]	[illegible]			

SCALE NONE | DESIGNED A. VRUSE | DRAWN J. GEE

PENNSYLVANIA POWER & LIGHT COMPANY

ALLENTOWN, PENNSYLVANIA

SUSQUEHANNA STEAM ELECTRIC STATION – UNIT 1, UNIT 2

BECHTEL – SAN FRANCISCO

SCHEMATIC DIAGRAM

DIESEL GEN AUTO START SIGNALS COMMON

JOB No.	DRAWING No.	REV.
8856	E-184 SH 2	8

D-107333 SH 2

24X

I certify that the microfilmed image contained on this microform was made in the normal and regular course of business. This is a true, full, correct and complete reproduction and replacement for and/or in lieu of originals documents generated by the Bechtel Group of companies.

Signed [illegible] Camera Operator

Camera Type MRG-1

Control #5803201

Date 3/10/83 of Document

REGULATORY DOCKET FILE

D

This drawing and the design it covers are the property of BECHTEL. They are merely loaned and on the borrower's express agreement that they will not be reproduced, copied, loaned, exhibited, nor used except in the limited way and private use permitted by any written consent given by the lender to the borrower.

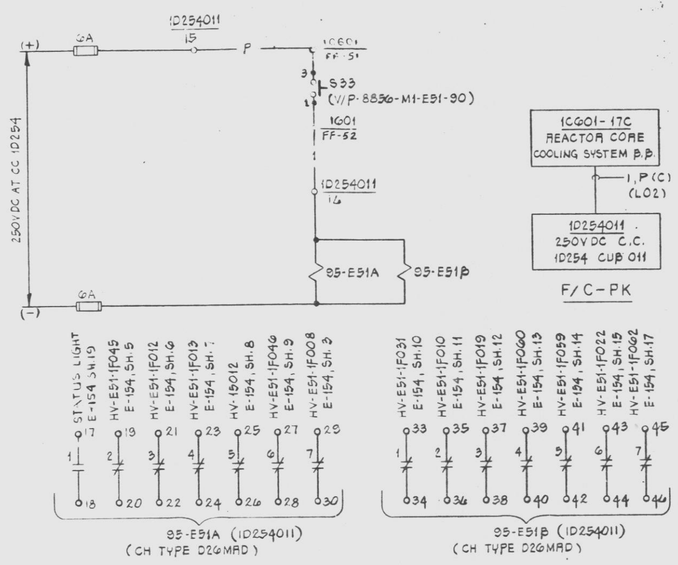

RCIC SYSTEM BYPASS AUX CONTROL

SCHEME : 1Q0900

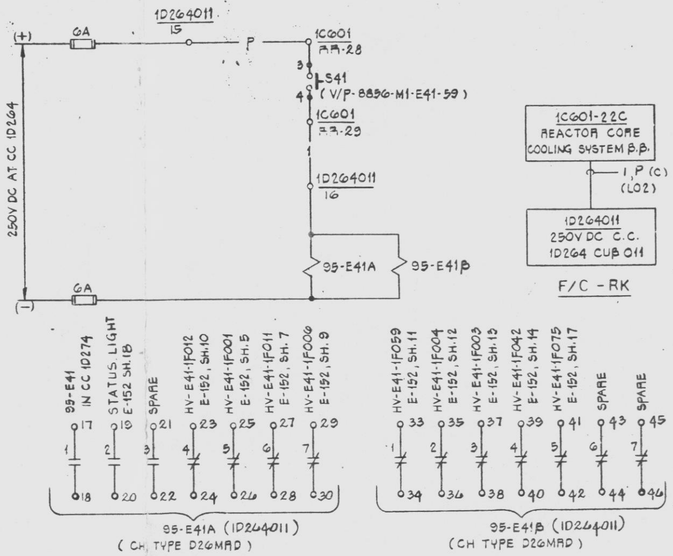

HPCI SYSTEM BYPASS AUX CONTROL

SCHEME : 1Q0901

NOTES:

1. FOR STANDARD SYMBOLS FOR ELECTRICAL DIAGRAMS SEE DWG. 8856-E-42.
2. ALL DEVICE NOS. TO BE SUFFIXED BY CONTROL CENTER CUBICLE NO.

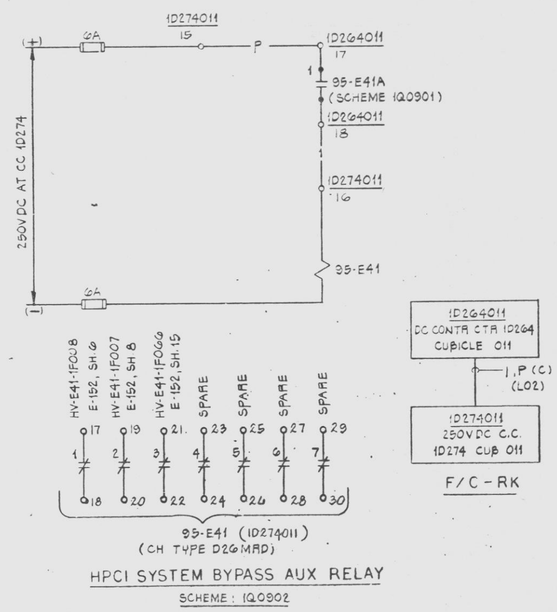

HPCI SYSTEM BYPASS AUX RELAY

SCHEME : 1Q0902

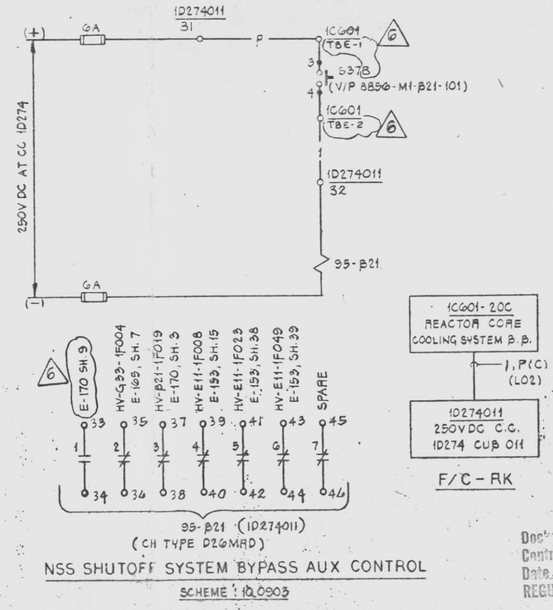

NSS SHUTOFF SYSTEM BYPASS AUX CONTROL

SCHEME : 1Q0903

PRC APERTURE CARD

UNCONTROLLED DOCUMENT FOR REFERENCE ONLY

THIS DOCUMENT IS UNDER PP&L ADMINISTRATIVE CONTROL. NO CHANGES CAN BE MADE WITHOUT PRIOR PP&L APPROVAL.

REFERENCE DWG'S.	
BECHTEL NO.	PL. NO.
E-42	A-107191
V/P 8856-M1-B21-101	FF114540
V/P 8856-M1-E41-20	FF127250
V/P 8856-M1-E41-90	FF125010
E-152	D-107301
E-153	D-107302
E-154	D-107303
E-169	D-107314
E-170	D-107319
V/P 8856-E41-20 (31)	FF103210

NO.	DATE	REVISIONS	BY	CHK'D	DESIGN SUPV'G	ENG'G	PROJ. ENGR	APP'D
A	8/10/82	REV TO INCORP FCR E-10668	VA	MH RS	TF	/	GP 8/10	
A	8/5/82	INCORP IDCN # 1R(OCP 8639 Rev 0)	APL	VTG	TF	/	GP 8/5	
A	7/27/82	REISSUED "AS BUILT" & REVISED TO INCORP IDCN # 3(OCP 8733 R/O)	RS	MH	TF	/	GP 7/27	
A	7/21/82	ISSUED AS BUILT"	RS	MH	TF	/	GP 7/21	
A	12/7/76	ISSUED FOR CONSTRUCTION	NSS	ML TF	TF	/	GP 12/7	

SCALE: — DESIGNED W.SZCZEPANSKI DRAWN M.PSANTOS

PENNSYLVANIA POWER & LIGHT COMPANY
ALLENTOWN, PENNSYLVANIA
SUSQUEHANNA STEAM ELECTRIC STATION — UNIT 1, UNIT 2

BECHTEL — SAN FRANCISCO

SCHEMATIC DIAGRAM
BYPASS INDICATION SYSTEM
UNIT 1

JOB No.	DRAWING No.	REV.
8856	E-185 SH 1	6

D-107334 SH 1

Docket # 50-387
Control # 8309220117-58
Date 3/10/83 of Document:
REGULATORY DOCKET FILE

GIP35 SCHEM BYPASS INDICATION SY W

24X

I certify that this microfilmed image contained on this microform was made in the normal and regular course of business. This is a true, full, correct and complete reproduction and replacement for and/or in lieu of original documents generated by the Bechtel group of companies.
Signature DANNY Date 8-13-82 MRG 1
Camera Operator

D

This drawing and the design it covers are the property of BECHTEL. They are merely loaned and on the borrower's express agreement that they will not be reproduced, copied, loaned, exhibited, nor used except in the limited way and private use permitted by any written consent given by the lender to the borrower.

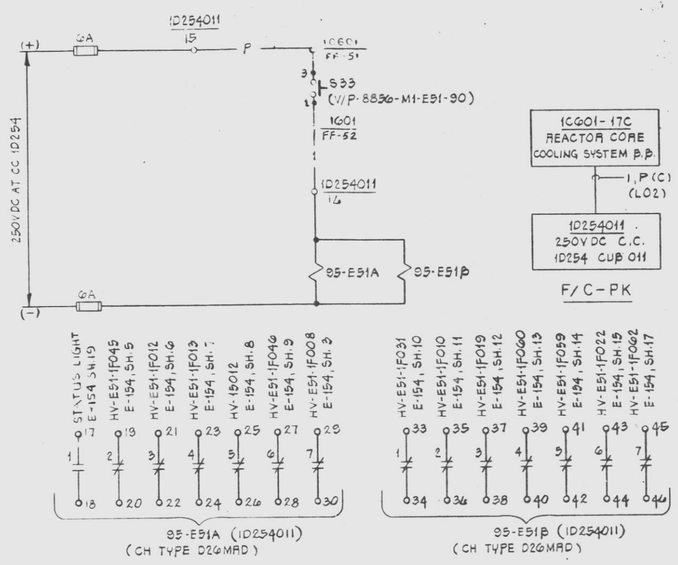

RCIC SYSTEM BYPASS AUX CONTROL

SCHEME : 1Q0900

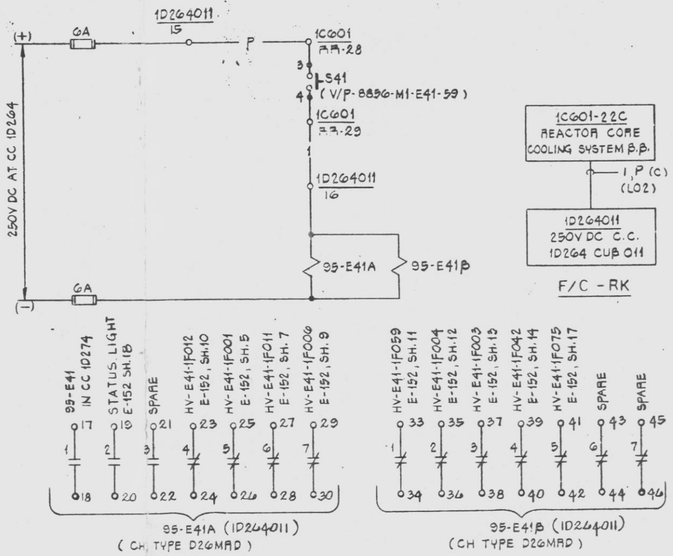

HPCI SYSTEM BYPASS AUX CONTROL

SCHEME : 1Q0901

NOTES:

1. FOR STANDARD SYMBOLS FOR ELECTRICAL DIAGRAMS SEE DWG. 8856-E-42.
2. ALL DEVICE NOS. TO BE SUFFIXED BY CONTROL CENTER CUBICLE NO.

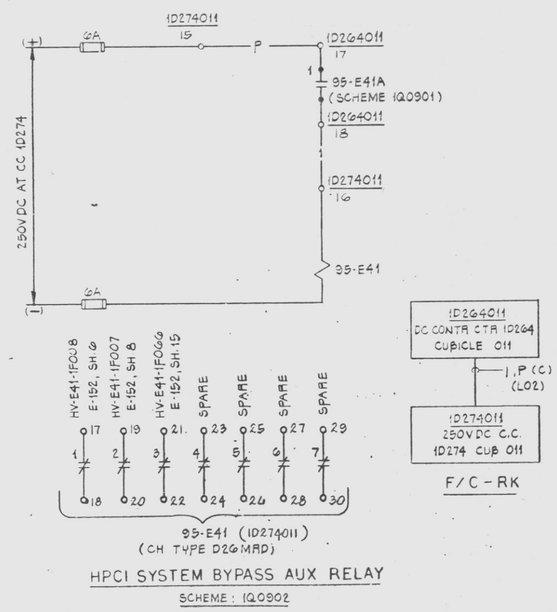

HPCI SYSTEM BYPASS AUX RELAY

SCHEME : 1Q0902

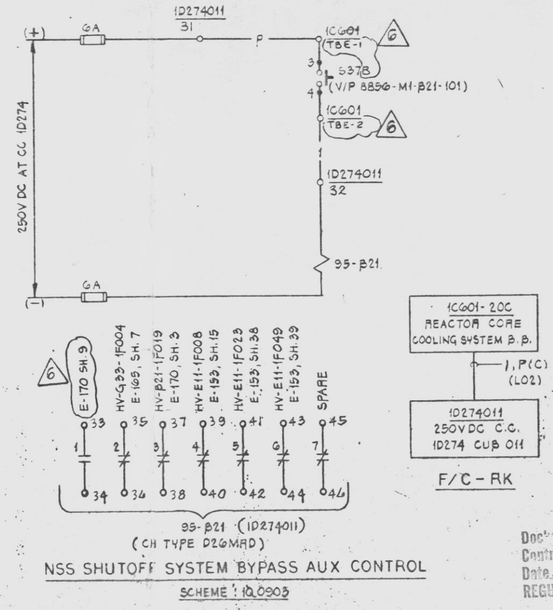

NSS SHUTOFF SYSTEM BYPASS AUX CONTROL

SCHEME : 1Q0903

PRC APERTURE CARD

UNCONTROLLED DOCUMENT FOR REFERENCE ONLY

THIS DOCUMENT IS UNDER PP&L ADMINISTRATIVE CONTROL. NO CHANGES CAN BE MADE WITHOUT PRIOR PP&L APPROVAL.

REFERENCE DWG'S.	
BECHTEL NO.	PL. NO.
E-42	A-107191
V/P 8856-M1-B21-101	FF114540
V/P 8856-M1-E41-20	FF127250
V/P 8856-M1-E41-90	FF125010
E-152	D-107301
E-153	D-107302
E-154	D-107303
E-169	D-107314
E-170	D-107319
V/P 8856-E41-20 (31)	FF103210

NO.	DATE	REVISIONS	BY	CHK'D	DESIGN SUPV'G	ENG'G	PROJ. ENGR	APP'D
A	8/10/82	REV TO INCORP FCR E-10668	VA	MH RS	TF	/	GP 8/10	
A	8/5/82	INCORP IDCN # 1R(OCP 8639 Rev 0)	APL	VTG	TF	/	GP 8/5	
A	7/27/82	REISSUED "AS BUILT" & REVISED TO INCORP IDCN # 3(OCP 8733 R/O)	RS	MH	TF	/	GP 7/27	
A	7/21/82	ISSUED AS BUILT"	RS	MH	TF	/	GP 7/21	
A	12/7/76	ISSUED FOR CONSTRUCTION	NSS	ML TF	TF	/	GP 12/7	

SCALE: — DESIGNED W.SZCZEPANSKI DRAWN M.PSANTOS

PENNSYLVANIA POWER & LIGHT COMPANY
ALLENTOWN, PENNSYLVANIA
SUSQUEHANNA STEAM ELECTRIC STATION — UNIT 1, UNIT 2

BECHTEL — SAN FRANCISCO

SCHEMATIC DIAGRAM
BYPASS INDICATION SYSTEM
UNIT 1

JOB No.	DRAWING No.	REV.
8856	E-185 SH 1	6

D-107334 SH 1

Docket # 50-387
Control # 8309220117-58
Date 3/10/83 of Document:
REGULATORY DOCKET FILE

GIP35 SCHEM BYPASS INDICATION SY W

24X

I certify that this microfilmed image contained on this microform was made in the normal and regular course of business. This is a true, full, correct and complete reproduction and replacement for and/or in lieu of original documents generated by the Bechtel group of companies.
Signature DANNY Date 8-13-82 MRG 1
Camera Operator

D

This drawing and the design it covers are the property of BECHTEL. They are merely loaned and on the borrower's express agreement that they will not be reproduced, copied, loaned, exhibited, nor used except in the limited way and private use permitted by any written consent given by the lender to the borrower.

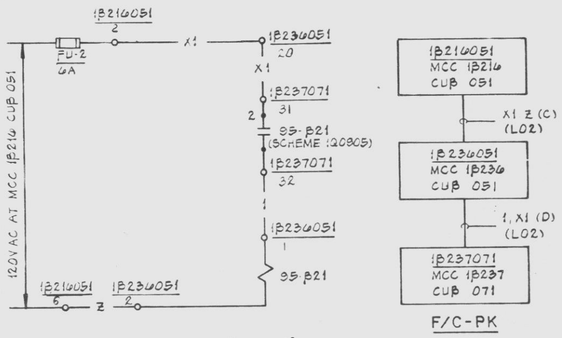

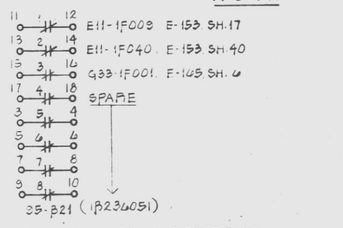

BYPASS INDICATION SYSTEM-AUX CONTROL

SCHEME Nº: 1Q0804

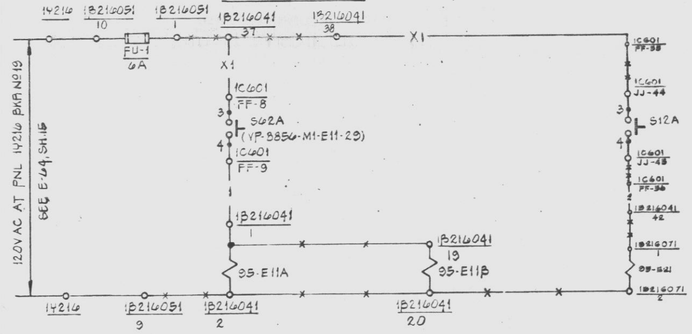

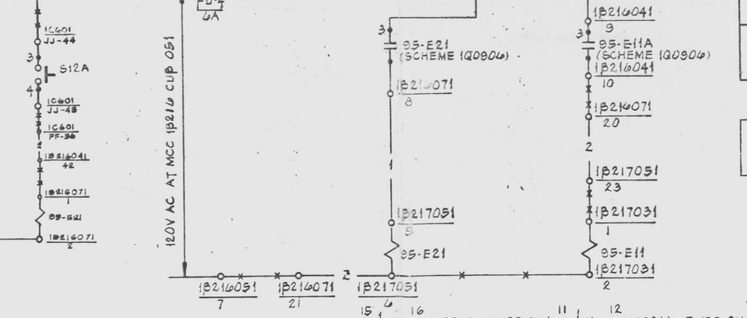

BYPASS INDICATION SYSTEM-AUX CONTROL

SCHEME Nº: 1Q0805

NOTES:

1. FOR STANDARD SYMBOLS FOR ELECTRICAL DIAGRAMS SEE DWG 8856-E-42.
2. ALL DEVICE NOS TO BE SUFFIXED BY MOTOR CONTROL CENTER CUBICLE NO.
3. ALL 95 RELAYS ARE CUTLER-HAMMER TYPE D20MA.

UNCONTROLLED DOCUMENT
FOR REFERENCE ONLY
Docket # 50-387
Control # 8303220117-59
Date 3/10/83 of Document
REGULATORY DOCKET FILE
THIS DOCUMENT IS UNDER PP&L ADMINISTRATIVE CONTROL. NO CHANGES CAN BE MADE WITHOUT PRIOR PP&L APPROVAL.

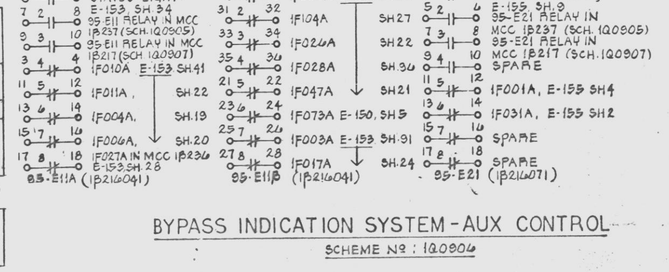

BYPASS INDICATION SYSTEM-AUX CONTROL

SCHEME Nº: 1Q0806

BYPASS INDICATION SYSTEM-AUX CONTROL

SCHEME Nº: 1Q0807

REFERENCE DWG'S.	
BECHTEL NO.	PP. NO.
E-42	A-107194
V/P 8856-M1-B21-101	FF114510
V/P 8856-M1-E41-59	FF127250
E-150	D-107299
E-152	D-107301
E-153	D-107302
E-155	D-107304
E-165	D-107314
V/P8856-E118	FF103180
E-44	D-107213
V/P8856-M1-E11-28	FF124510
E-170	D-107313

PRC APERTURE CARD

NO.	DATE	REVISIONS	BY	CHK'R	DESIGN SUPV	ENG'R	PROJ ENGR	APP'D
6	7/12/76	ISSUED FOR CONSTRUCTION	TJPS	[illegible]	HW	[illegible]		
5	11/4/77	ISSUED "AS BUILT"	RS	[illegible]	HW	/	[illegible]	
4	"AS BUILT" REVISED TO INCORP. TOUCH-UP (DCR 398 & REV. 1) 2/28/78		PA	[illegible]	TC	/	[illegible]	
3	3/7/79	REVISED PER PCR-E-5128, (DCR-432)	GM	[illegible]	TC	[illegible]	[illegible]	
2	7/10/82	REV. TO INCORP. EDCN# 2 R OF DCP 8035 REV. 0, EDCN#3 OF DCP 5337 REV. 0 & EDCN#1 R OF DCP 8034 REV. 0	VA	[illegible]	TC	[illegible]	[illegible]	

SCALE: NONE | DESIGNED: K.SZCZEPANSKI | DRAWN: T.SANTOS

PENNSYLVANIA POWER & LIGHT COMPANY
ALLENTOWN, PENNSYLVANIA
SUSQUEHANNA STEAM ELECTRIC STATION – UNIT 1, UNIT 2

BECHTEL – SAN FRANCISCO

SCHEMATIC DIAGRAM
BYPASS INDICATION SYSTEM
UNIT 1

JOB No.	DRAWING No.	REV.
8856	E-185 SH 2	6

D-107334 SH 2

G1P35 SCHEM BYPASS INDICATION SY W

7/78 D.P. ARKWRIGHT NO. 2102 W65
24X
I certify that the microfilmed image contained on this microform were made in the normal and regular course of business. This is a true, full, correct and complete reproduction and replacement for and/or in lieu of original documents generated by the Bechtel group of companies.
DANNY Date 8-13-82 MRG 1
Signature of Camera Operator

This drawing and the design it covers are the property of BECHTEL. They are merely loaned and on the borrower's express agreement that they will not be reproduced, copied, loaned, exhibited, nor used except in the limited way and private use permitted by any written consent given by the lender to the borrower.

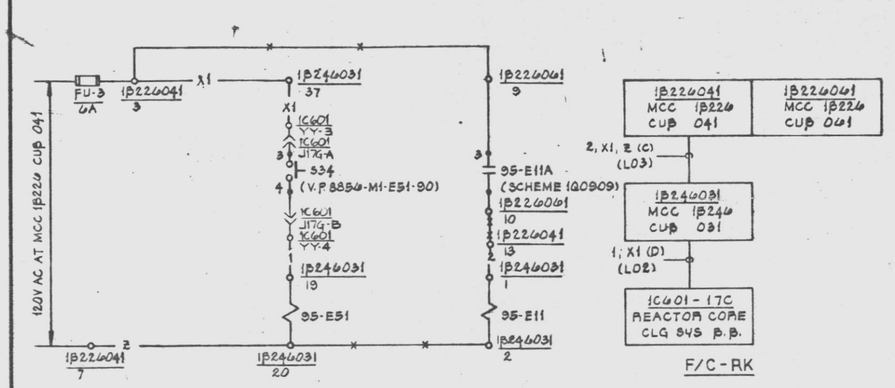

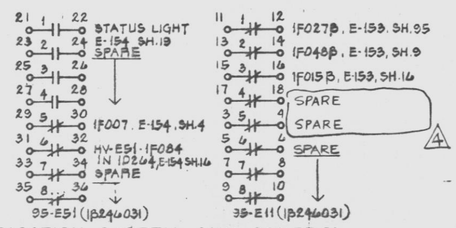

BYPASS INDICATION SYSTEM - AUX CONTROL

SCHEME NO.: 1Q0908

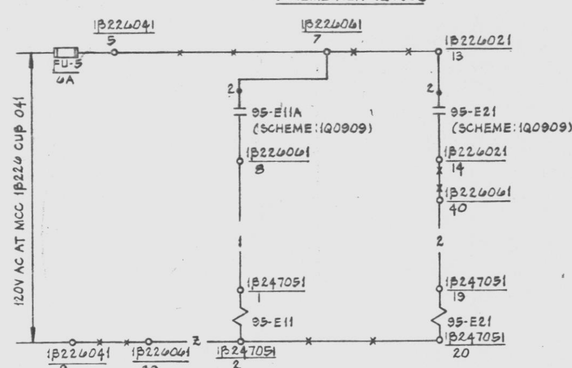

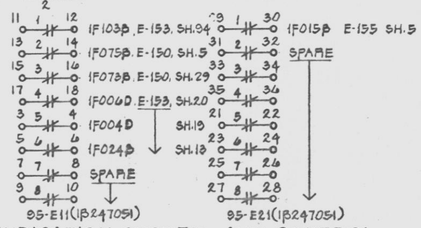

BYPASS INDICATION SYSTEM - AUX CONTROL

SCHEME NO.: 1Q0910

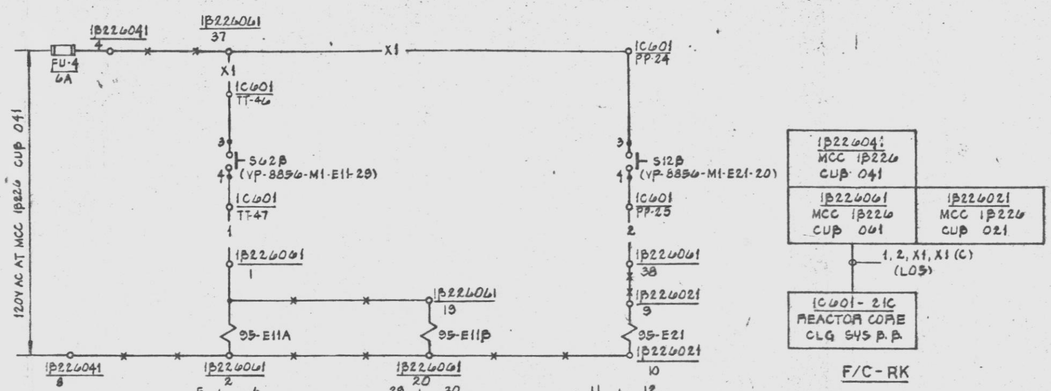

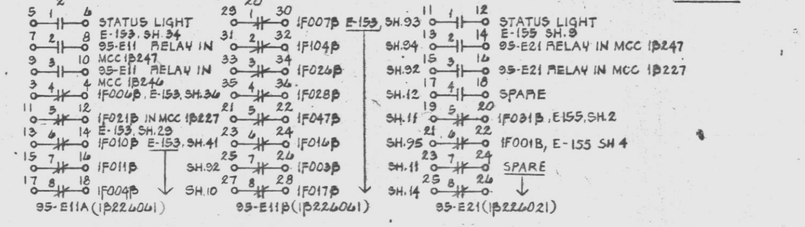

BYPASS INDICATION SYSTEM - AUX CONTROL

SCHEME NO.: 1Q0909

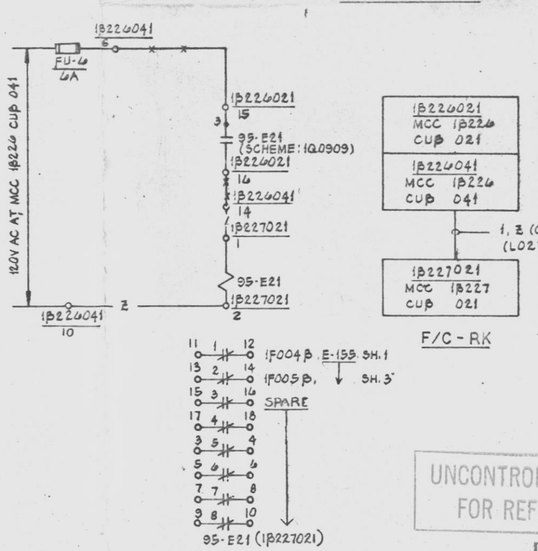

BYPASS INDICATION SYSTEM - AUX CONTROL

SCHEME NO.: 1Q0911

NOTES:

1. FOR STANDARD SYMBOL FOR ELECTRICAL DIAGRAM SEE DWG 8856-E-42.
2. ALL DEVICE NOS. TO BE SUFFIXED BY MOTOR CONTROL CENTER CUBICLE NO.
3. ALL 95 RELAYS ARE CUTLER-HAMMER TYPE D26MA.

PRC APERTURE CARD

THIS DOCUMENT IS UNDER PP&L ADMINISTRATIVE CONTROL. NO CHANGES CAN BE MADE WITHOUT PRIOR PP&L APPROVAL.

REFERENCE DWG'S.	
BECHTEL NO.	PL NO.
E-42	A-107191
V/P 8856-E11B	FF114510
V/P 8856-E11A	FF127250
E-153	D-107302
E-154	D-107303
E-155	D-107304
E-150	D-107299
V/P 8856-E11B	FF-103180
V/P 8856-M1-E11-28	FF124510

NO.	DATE	REVISIONS	BY	CHK	DESIGN SUPV	ENG	PROJ ENGR	APP
4	7/19/82	(DWG #E-11(1B246031) REF CONTACTS (DCR#42) ISSUED "AS BUILT"	ES	MCK	RKJ		SHT	
3	2/27/78	REVISED PER DCR #42	MCA		RKJ		SHT	
2	12/1/77	ADDED 1C601 TERMINAL NO3	L	CHK	MPS		SHT	
1	11/11/77	ADDED TERMINAL NO AND REVISED AS SHOWN	MPS	GW	RKJ		SHT	
0	7/29/76	ISSUED FOR CONSTRUCTION	MPS	RH CGC	RKJ		SHT	

SCALE: NONE | DESIGNED W.J. ZEPANSKI | DRAWN M.P. SANTOS

PENNSYLVANIA POWER & LIGHT COMPANY

ALLENTOWN, PENNSYLVANIA

SUSQUEHANNA STEAM ELECTRIC STATION – UNIT 1, UNIT 2

BECHTEL – SAN FRANCISCO

SCHEMATIC DIAGRAM
BYPASS INDICATION SYSTEM
UNIT 1

JOB No.	DRAWING No.	REV.
8856	E-185 SH 3	4
D-107334 SH 3		

UNCONTROLLED DOCUMENT FOR REFERENCE ONLY

Docket #50-387
Control #8303290117-60
Date 3/10/83 of Document:
REGULATORY DOCKET FILE

G I P 3 5 SCHEM BYPASS INDICATION SYS W

7/78 D/F ADVANCE NO. 3158-W009

24X

I certify that the microfilmed image contained on this microform was made in the normal and regular course of business. This is a true, full, correct and complete reproduction and replacement for and/or in lieu of original documents owned by the Bechtel group of companies.

DANNY Date 5-7-83 Camera Type MRG 1

D

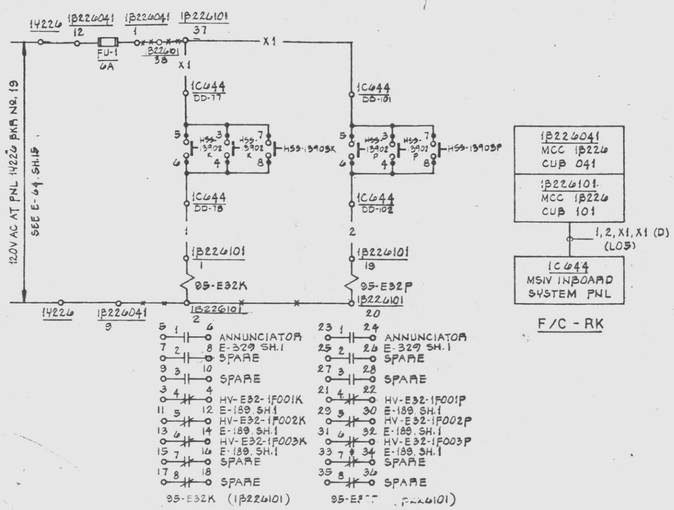

BYPASS INDICATION SYSTEM - AUX CONTROL

SCHEME NO.: 1Q0912

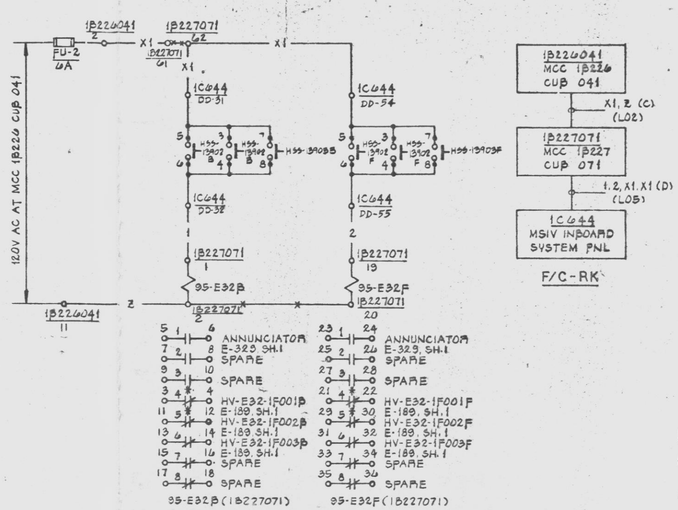

BYPASS INDICATION SYSTEM - AUX CONTROL

SCHEME NO.: 1Q0913

NOTES:

1. FOR STANDARD SYMBOL FOR ELECTRICAL DIAGRAM SEE DWG 8856-E-42.
2. ALL DEVICE NOS. TO BE SUFFIXED BY MOTOR CONTROL CENTER CUBICLE NO.
3. ALL 95 RELAYS ARE CUTLER-HAMMER TYPE D26MA.
4. * INDICATES FIELD TO CHANGE CONTACT FROM N.O. TO N.C.

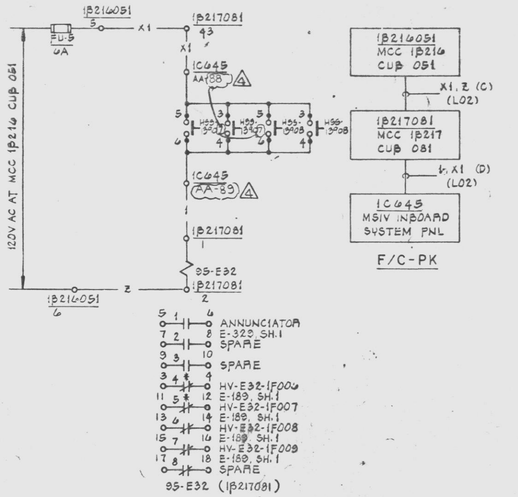

BYPASS INDICATION SYSTEM - AUX CONTROL

SCHEME NO.: 1Q0914

REFERENCE DWG'S.	
BECHTEL NO.	PL. NO.
E-42	A-107181
VF3856-M	FF1127030
E-189	D-107338
E-329	D-107478
VF3856-E18	FF109180

NO.	DATE	REVISIONS	BY	CHK'R	DESIGN SUPV'G ENG'R	PROJ. ENG'R	APP'D
4	1/16/84	REISSUED "AS BUILT" INCLUDE PCR-E-1127, REV. HSS (DCR 82)	EAZ	RDM	MB	JPS	
3	12/21/83	ADDED PNL 1C644 TERM. (DCR 42) & ISSUED "AS BUILT"	RS	HCB	RM		
2	5/1/79	REVISED PER SCR 1B3H-102	LL	RAS	RM		
1	11/1/77	ADDED TERMINAL NO. AND REVISED AS SHOWN	TPS	RDM	MB	JPS	
0	1/15/76	ISSUED FOR CONSTRUCTION.	TPS	RDM	MB	JPS	

SCALE: NONE — DESIGNED W.DZIEDZIEJANSKI — DRAWN M.P.SANTOS

PENNSYLVANIA POWER & LIGHT COMPANY

ALLENTOWN, PENNSYLVANIA

SUSQUEHANNA STEAM ELECTRIC STATION — UNIT 1, UNIT 2

BECHTEL — SAN FRANCISCO

SCHEMATIC DIAGRAM
BYPASS INDICATION SYSTEM
UNIT 1

JOB No.	DRAWING No.	REV.
8856	E-185 SH 4	4

D-107334 SH 4

GIP35 SCHEM BYPASS INDICATION SYN W

This drawing and the design it covers are the property of BECHTEL. They are merely loaned and on the borrower's express agreement that they will not be reproduced, copied, loaned, exhibited, or used except in the limited way and private use permitted by any written consent given by the lender to the borrower.

PRC APERTURE CARD

Docket #50-387
Control #8303220117-61
Date 3/10/83 of Document:
REGULATORY DOCKET FILE

THIS DOCUMENT IS UNDER PP&L ADMINISTRATIVE CONTROL. NO CHANGES CAN BE MADE WITHOUT PRIOR PP&L APPROVAL.

UNCONTROLLED DOCUMENT
FOR REFERENCE ONLY

24X

I certify that the microfilmed image contained on this microform were made in the normal and regular course of business. This is a true, full, correct and complete reproduction and replacement for and/or in lieu of original documents generated by the Bechtel group of companies.

Signed _____ Date 1-14-83 Camera Type MRC 1
Camera Operator

D

This drawing and the design it covers are the property of BECHTEL. They are merely loaned and are the borrower's express agreement that they will not be reproduced, copied, loaned, exhibited, per mit design to

This drawing and the design it covers are the property of BECHTEL. They are merely loaned and on the borrower's express agreement that they will not be reproduced, copied, loaned, exhibited, nor used except in the limited way and private use permitted by any written consent given by the lender to the borrower.

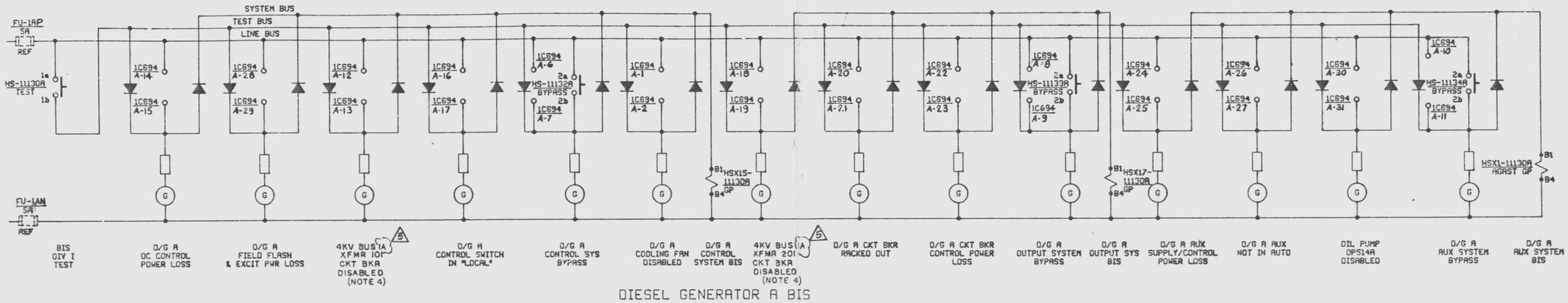

DIESEL GENERATOR A BIS

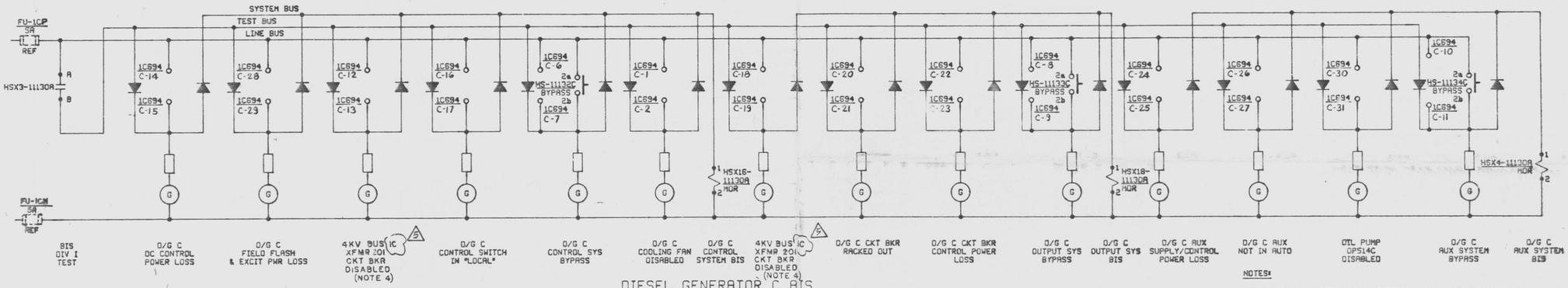

DIESEL GENERATOR C BIS

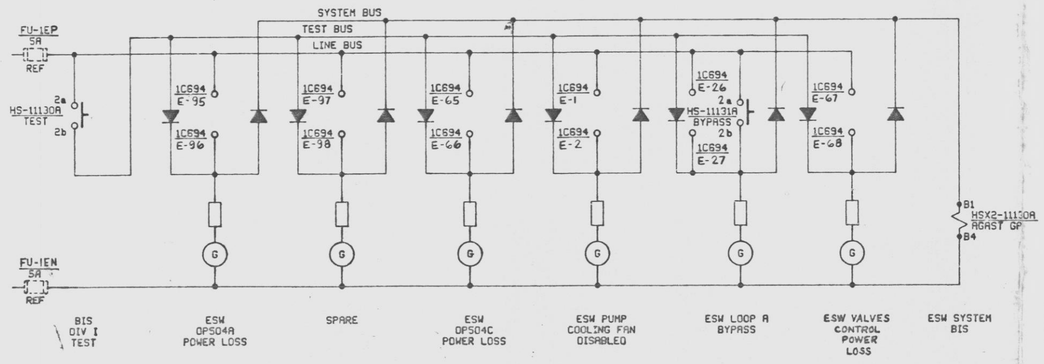

DIV I ESW BIS

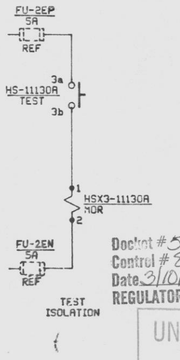

NOTES:

1. FOR GENERAL NOTES, POWER DISTRIBUTION, SWITCH AND RELAY DEVELOPMENTS SEE E-185 SHEET 5.
2. BLOCKING DIODES TO BE TYPE 1N459A OR EQUAL.
3. FOR INPUTS TO THESE DISPLAYS SEE E-185 SH 11.
4. ENGRAVING BY FIELD.

PRC APERTURE CARD

THIS DOCUMENT IS UNDER PP&L ADMINISTRATIVE CONTROL. NO CHANGES CAN BE MADE WITHOUT PRIOR PP&L APPROVAL.

Docket # 50-387
Control # 8303290117 63
Date 3/10/83 of Document:
REGULATORY DOCKET FILE

UNCONTROLLED DOCUMENT FOR REFERENCE ONLY

NO.	DATE	REVISIONS	BY	CH'K	DESIGN SUPV.	ENGR	PROJ ENGR	APP'D
5	9/12/82	ISSUED "AS BUILT"	KS					
4	5/4/79	ADDED ENGRAVINGS TO INDICATING LIGHTS AS SHOWN	L.					
3	2/6/79	REVISED LINE BUS WIRING AS SHOWN	KB					
2	1/4/79	RE-ISSUED "AS BUILT" REVD 4KV BUS NOS. (DCR 653)	KB					
1	9/24/77	ISSUED FOR CONSTRUCTION	DW	KB	DW			

SCALE NONE | DESIGNED R. VAUSE | DRAWN

PENNSYLVANIA POWER & LIGHT COMPANY
ALLENTOWN, PENNSYLVANIA
SUSQUEHANNA STEAM ELECTRIC STATION – UNIT 1, UNIT 2

BECHTEL – SAN FRANCISCO

SCHEMATIC DIAGRAM BYPASS INDICATION SYSTEM (BOP) UNIT 1

JOB No.	DRAWING No.	REV.
8856	E-185 SH 6	5

D-107334 SH 6

GIP35 BYPASS INDICATION SYS BOP W

T/G D/P ARCHITECT NO. 3102-W-08

22 x 34 "D" SIZE

94X

I certify that the microfilmed image contained on this microform were made in the normal and regular course of business. This is a true, full, correct and complete reproduction and replacement for and/or in lieu of original documents generated by the Bechtel group of companies.
Signature DANNY Date 2-23-82 Camera Type MRG 1
Camera Operator

D

This drawing and the design it covers are the property of BECHTEL. They are merely loaned and on the borrower's express agreement that they will not be reproduced, copied, loaned, exhibited, nor used except in the limited way permitted by any written consent given by the lender to the borrower.

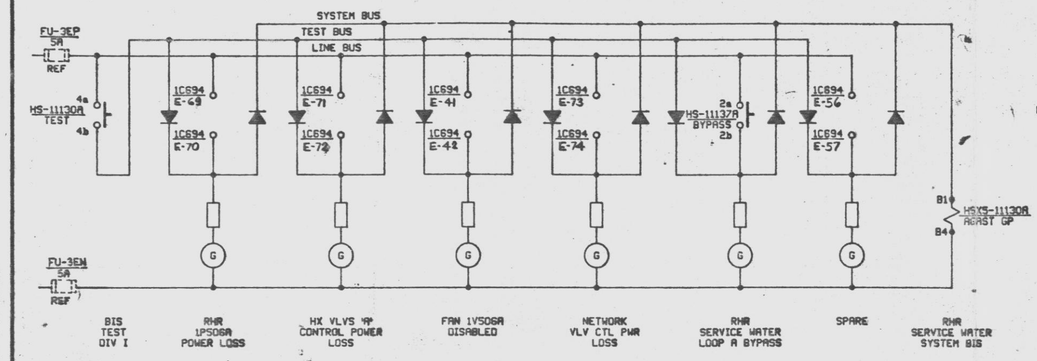

LOOP A RHR SERVICE WATER BIS

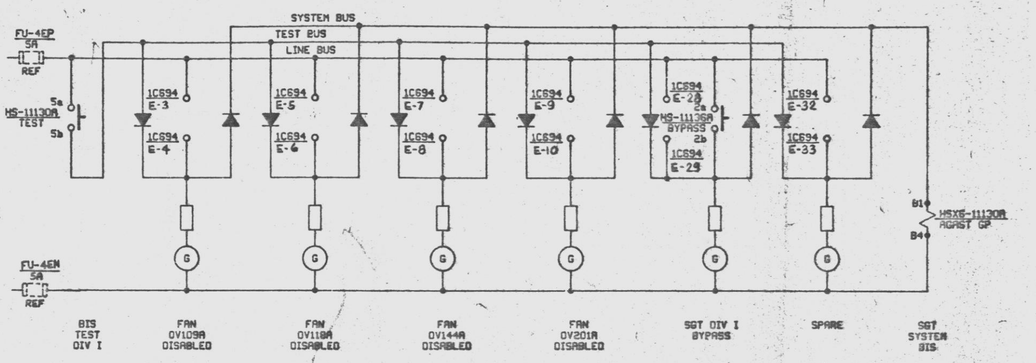

DIV I STANDBY GAS TREATMENT BIS

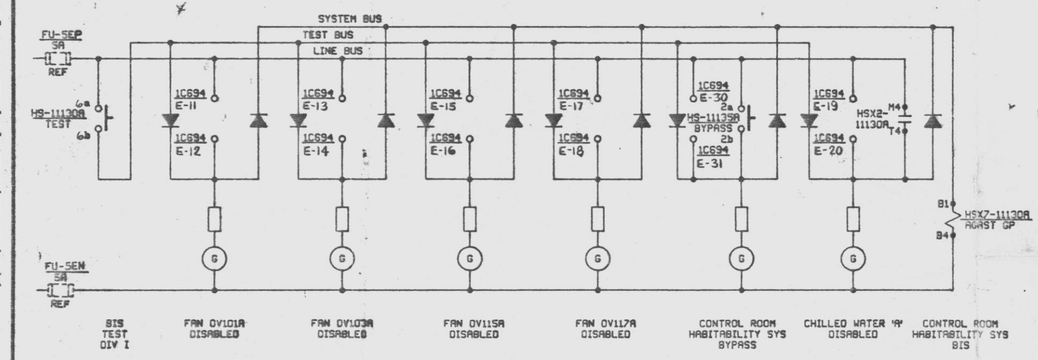

DIV I CONTROL ROOM HABITABILITY BIS

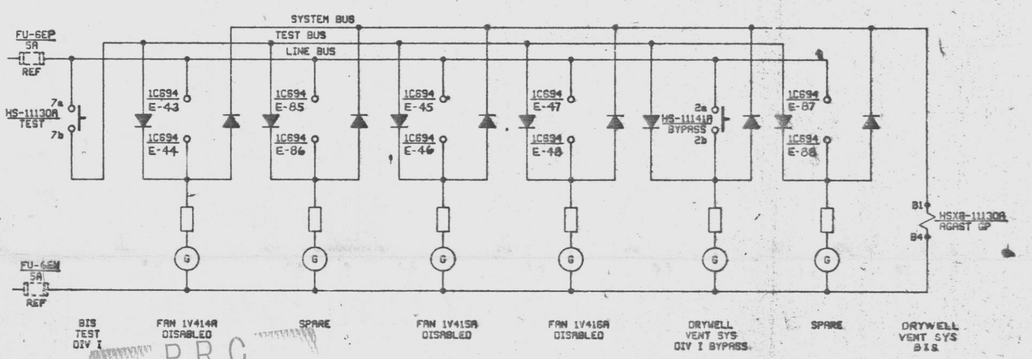

DIV I DRYWELL VENT BIS

PRC APERTURE CARD

NOTES:
1. FOR GENERAL NOTES, POWER DISTRIBUTION, SWITCH AND RELAY DEVELOPMENTS SEE E-185 SHEET 5.
2. BLOCKING DIODES TO BE TYPE 1N459A OR EQUAL.
3. FOR INPUTS TO THESE DISPLAYS SEE E-185 SH 11.

Document # 50-387
Control # 8303220117 64
Date 3/10/83 of Document.
REGULATORY DOCKET FILE

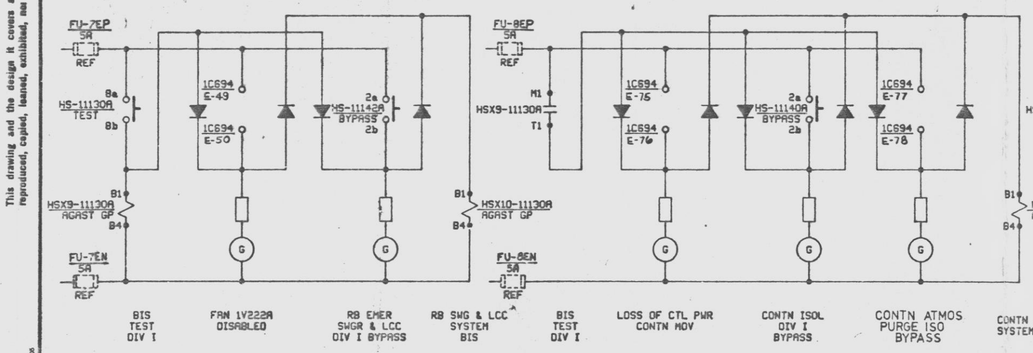

DIV I RB SWG & LCC BIS

DIV I CONTN ISOL BIS

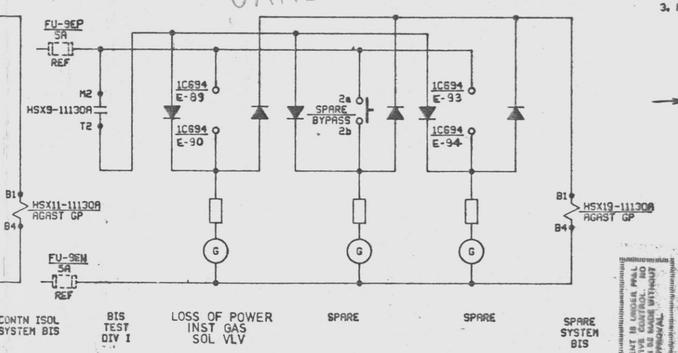

DIV I CONTN INSTR GAS BIS

UNCONTROLLED DOCUMENT
FOR REFERENCE ONLY

No.	DATE	REVISIONS	BY	CHK	OPER SUPV	ENG	PROJ ENGR	APP'D
4	7/24/84	ISSUED "AS BUILT"	RS	MM	MM			
3	7/10/84	INCORP. IDCN #1 (DCP 9251 REV 0)	DCR	SSC	MM			
2	11/17/78	REVISED TERM NOS AS SHOWN	LW	WB	LW			
1	9/26/78	ISSUED FOR CONSTRUCTION	LW	JZ	BWH			

SCALE NONE | DESIGNED R. VRUSE | DRAWN

PENNSYLVANIA POWER & LIGHT COMPANY
ALLENTOWN, PENNSYLVANIA
SUSQUEHANNA STEAM ELECTRIC STATION – UNIT 1, UNIT 2

BECHTEL – SAN FRANCISCO

SCHEMATIC DIAGRAM
BYPASS INDICATION SYSTEM (BOP)
UNIT 1

JOB No.	DRAWING No.	REV.
8856	E-185 SH 7	3

D-107334 SH 7

GIP35 BYPASS INDICATION SYS BOP W

THIS DOCUMENT INCORPORATES SIGNIFICANT ADMINISTRATIVE CONTROL AND CHANGES CAN BE MADE WITHOUT REVISING THE DRAWING

7/78 0/P ARCHIVIGHT NO. 3100-9005
22 x 34 "D" SIZE

74X
I certify that the microfilmed image contained on this microfilm were made in the normal and regular course of business. This is a true, full, correct and complete reproduction and replacement, for and/or in lieu of original documents generated by the Bechtel group of companies.
Signature Camera Operator DANNY Date 5-7- Camera Type MRG 1

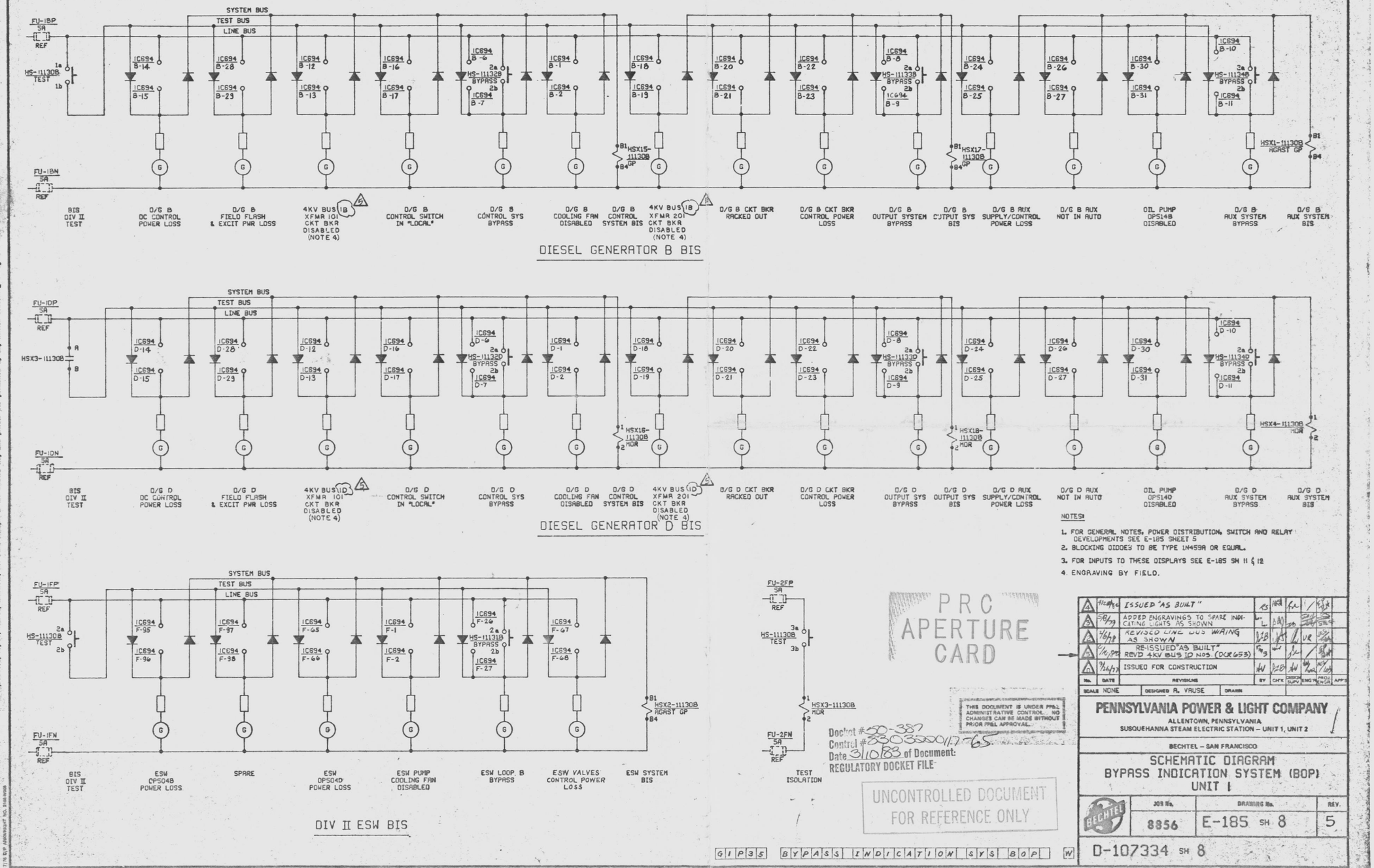

NOTES:

1. FOR GENERAL NOTES, POWER DISTRIBUTION, SWITCH AND RELAY DEVELOPMENTS SEE E-185 SHEET 5
2. BLOCKING DIODES TO BE TYPE 1N459A OR EQUAL.
3. FOR INPUTS TO THESE DISPLAYS SEE E-185 SH 11 & 12
4. ENGRAVING BY FIELD.

PRC APERTURE CARD

No.	DATE	REVISIONS	BY	CHK	DESIGN SUPV	ENG'R	PROJ ENGR	APP'S
4	4/20/84	ISSUED "AS BUILT"	RS	[illegible]	[illegible]	[illegible]	[illegible]	
3	5/8/79	ADDED ENGRAVINGS TO SPARE INDICATING LIGHTS AS SHOWN	L. L.	[illegible]	[illegible]	[illegible]	[illegible]	
2	2/6/78	REVISED LINE BUS WIRING AS SHOWN	[illegible]	[illegible]	[illegible]	UR	[illegible]	
1	6/16/80	RE-ISSUED "AS BUILT" REVD 4KV BUS ID NOS. (DCR653)	[illegible]	[illegible]	[illegible]	[illegible]	[illegible]	
0	9/26/77	ISSUED FOR CONSTRUCTION	[illegible]	[illegible]	[illegible]	[illegible]	[illegible]	

SCALE NONE | DESIGNED R. VRUSE | DRAWN

THIS DOCUMENT IS UNDER PP&L ADMINISTRATIVE CONTROL. NO CHANGES CAN BE MADE WITHOUT PRIOR PP&L APPROVAL.

Docket #50-387
Control #8303200117-65
Date 3/10/83 of Document:
REGULATORY DOCKET FILE

UNCONTROLLED DOCUMENT FOR REFERENCE ONLY

PENNSYLVANIA POWER & LIGHT COMPANY
ALLENTOWN, PENNSYLVANIA
SUSQUEHANNA STEAM ELECTRIC STATION – UNIT 1, UNIT 2

BECHTEL – SAN FRANCISCO

SCHEMATIC DIAGRAM
BYPASS INDICATION SYSTEM (BOP)
UNIT 1

JOB No.	DRAWING No.	REV.
8856	E-185 SH 8	5

D-107334 SH 8

G1P35 BYPASS INDICATION SYS BOP W

22 x 34 "D" SIZE

This drawing and the design it covers are the property of BECHTEL. They are merely loaned and on the borrower's express agreement that they will not be reproduced, copied, loaned, exhibited, nor used except in the limited way and private use permitted by any written consent given by the lender to the borrower.

24X

I certify that the microfilmed image contained on this microform were made in the normal and regular course of business. This is a true, full, correct and complete reproduction and replacement for and/or in lieu of original documents generated by the Bechtel group of companies.

Signed RHEY Date 6-25-83 Camera Type MRG-1
Camera Operator

D

This drawing and the design it covers are the property of BECHTEL. They are merely loaned and on the borrower's express agreement that they will not be reproduced, copied, loaned, exhibited, nor used except in the limited way and private use permitted by any written consent given by the lender to the borrower.

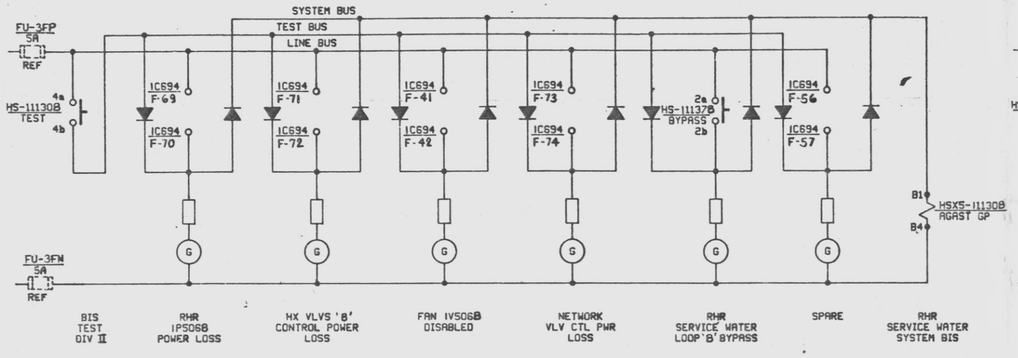

LOOP B RHR SERVICE WATER BIS

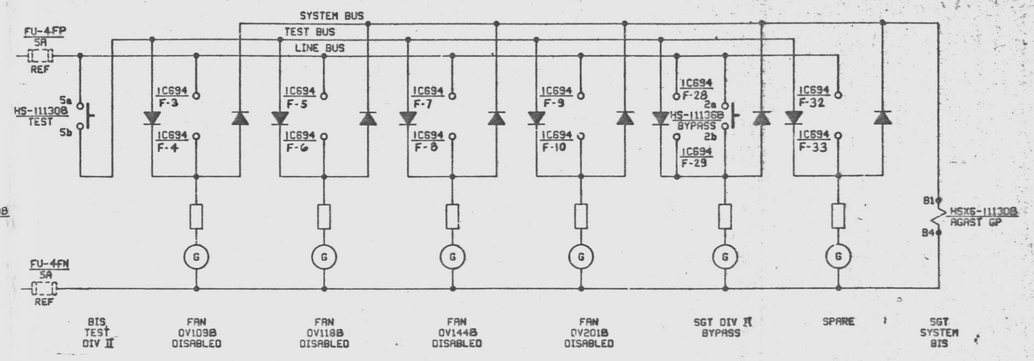

DIV II STANDBY GAS TREATMENT BIS

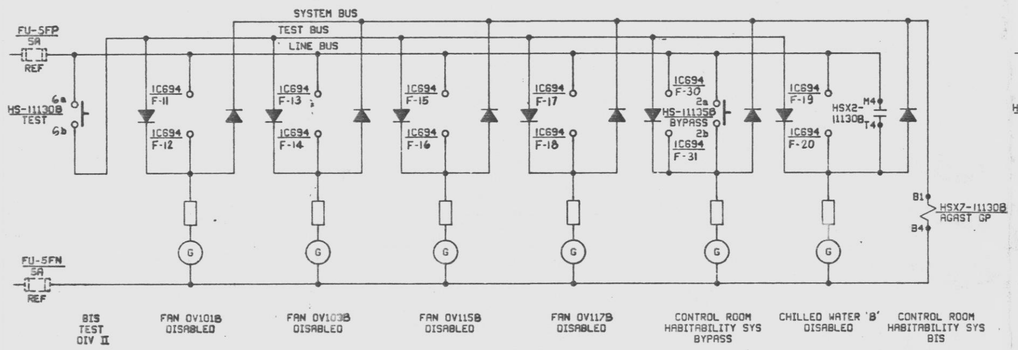

DIV II CONTROL ROOM HABITABILITY BIS

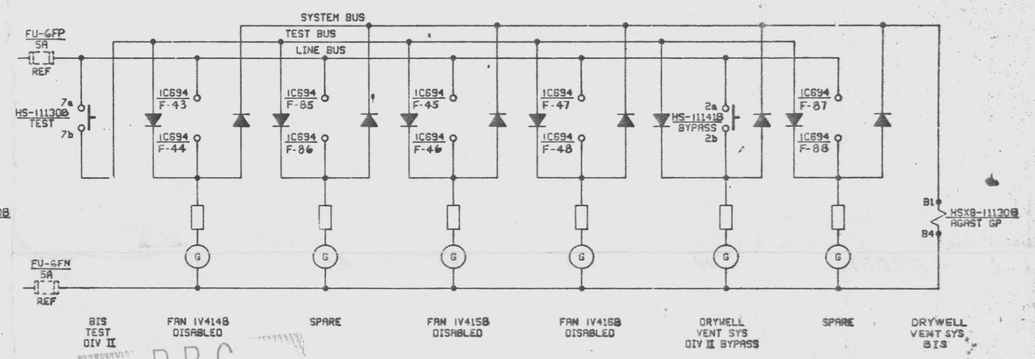

DIV II DRYWELL VENT BIS

PRC APERTURE CARD

NOTES:

1. FOR GENERAL NOTES, POWER DISTRIBUTION, SWITCH AND RELAY DEVELOPMENTS SEE E-185 SHEET 5.
2. BLOCKING DIODES TO BE TYPE 1N459A OR EQUAL.
3. FOR INPUTS TO THESE DISPLAYS SEE E-185 SH 12.

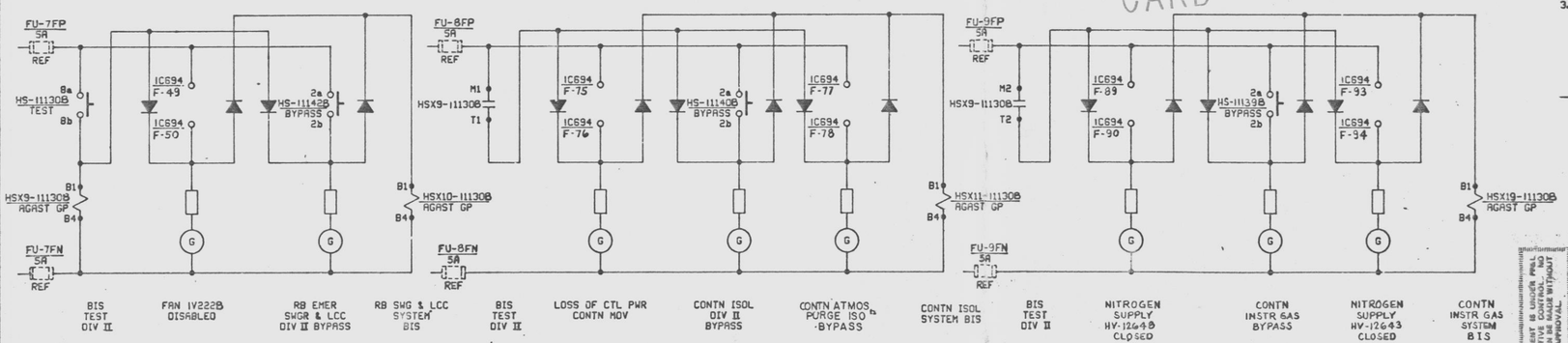

DIV II RB SWG & LCC BIS

DIV II CONTN ISOL BIS

DIV II CONTN INSTR GAS BIS

UNCONTROLLED DOCUMENT FOR REFERENCE ONLY

Docket # 50-387
Control # 8308250117
Date 8/10/83 of Document:
REGULATORY DOCKET FILE

No.	DATE	REVISIONS	BY	CH'K	SYSTEM SUPV	ENGTG	PROJ ENGR	APP'D
4	12/82	ISSUED "AS BUILT"	RS	KB				
3	7/30/80	REV. TO INCORP IDCR 1 (DCP NO 025.1 REV. 0)	VTC					
2	1/1/78	REVISED TERM NOS AS SHOWN	W					
1	8/4/77	ISSUED FOR CONSTRUCTION	W					

SCALE NONE | DESIGNED R. VAUSE | DRAWN

PENNSYLVANIA POWER & LIGHT COMPANY
ALLENTOWN, PENNSYLVANIA
SUSQUEHANNA STEAM ELECTRIC STATION – UNIT 1, UNIT 2

BECHTEL – SAN FRANCISCO

SCHEMATIC DIAGRAM BYPASS INDICATION SYSTEM (BOP) UNIT 1

JOB No.	DRAWING No.	REV.
8856	E-185 SH 9	3

D-107334 SH 9

G I P 3 5 | B Y P A S S | I N D I C A T I O N | S Y S | B O P | W

22 x 34 "D" SIZE

7/79 DIP ADVANCEMENT NO. 8103-0006
88107

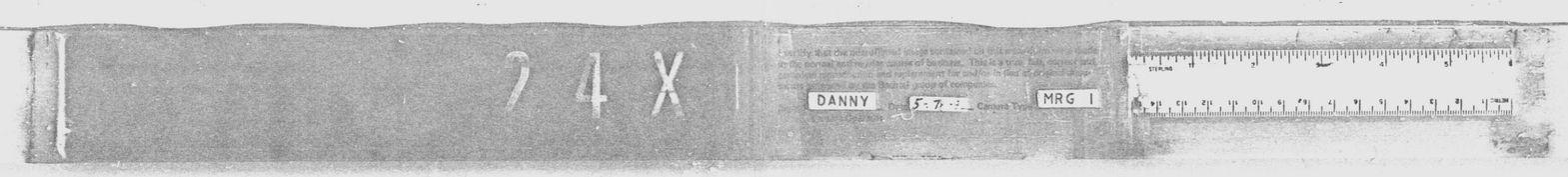

D

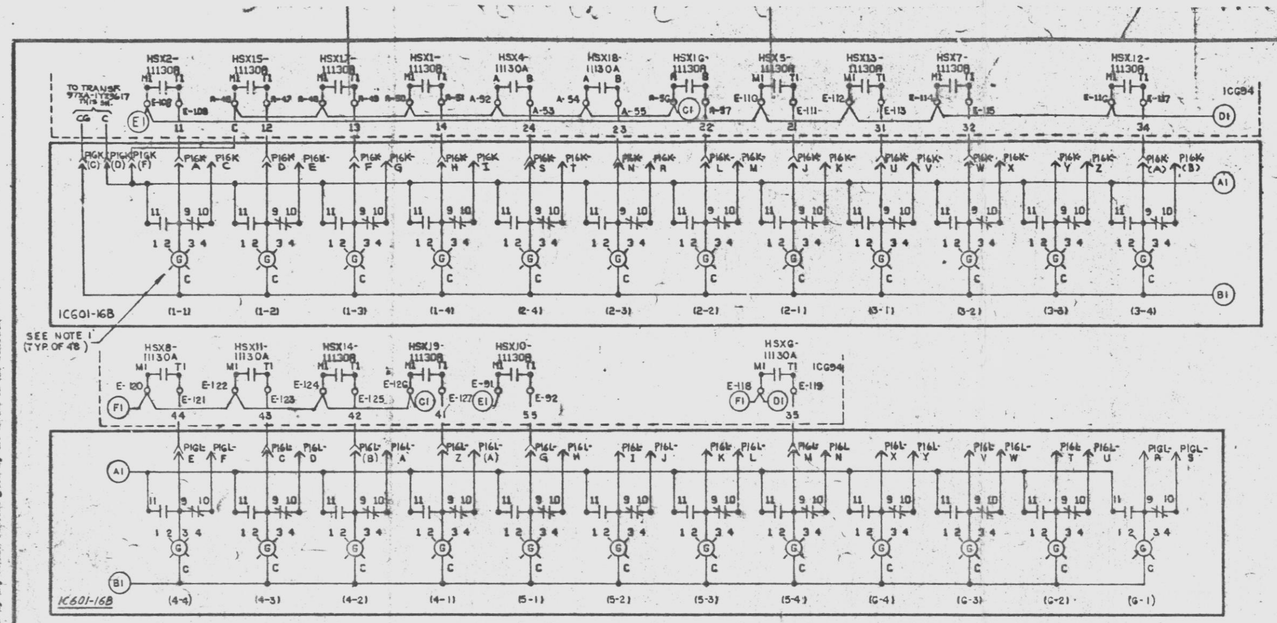

DIV I BIS DISPLAY

SCHEME 1Q7001

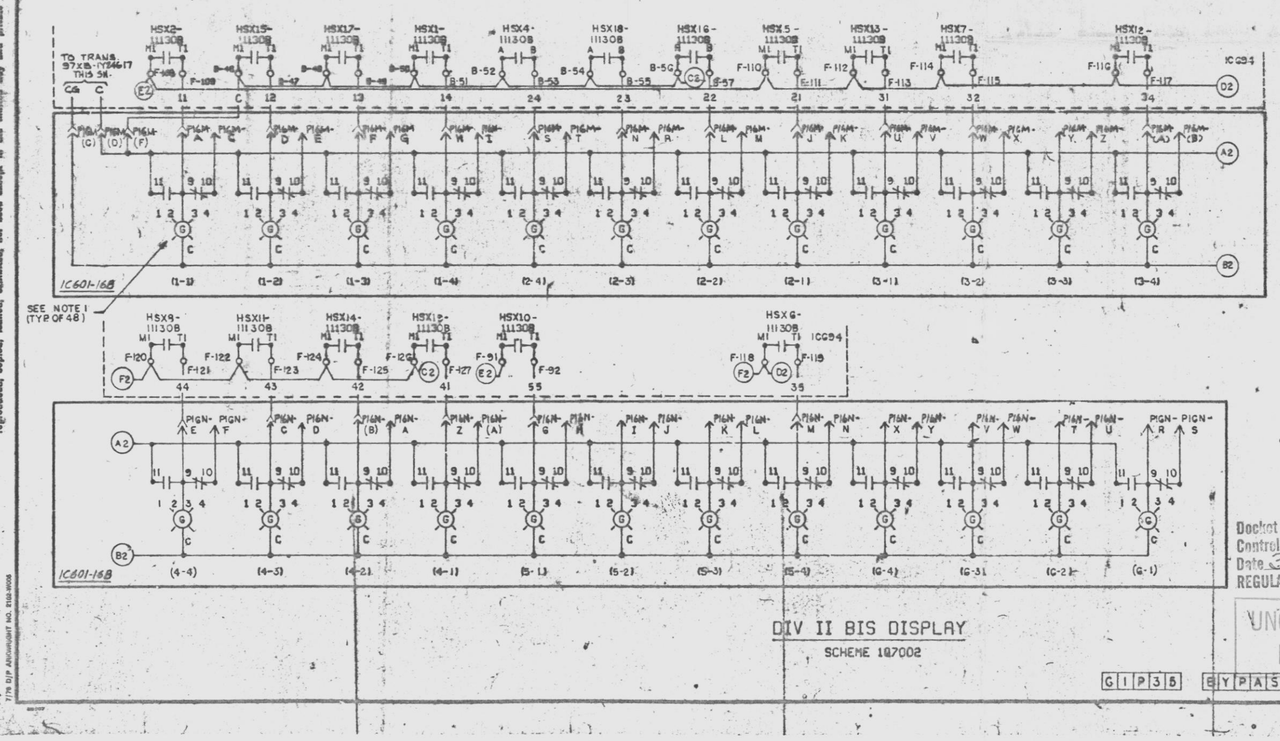

DIV II BIS DISPLAY

SCHEME 1Q7002

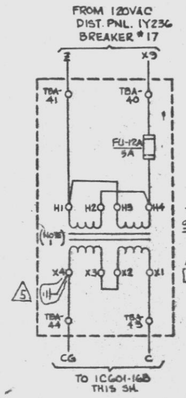

TRANSFORMER 97XA-1Y23617 120-24VAC 150VA AT PNL. IC694 [FOR DIV. I BIS DISPLAY- SCHEME 1Q7001]

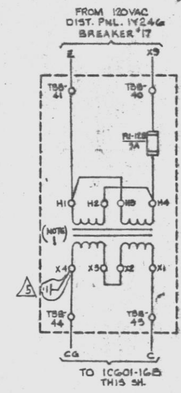

TRANSFORMER 97XB-1Y24617 120-24VAC 150VA AT PNL. IC694 [FOR DIV. II BIS DISPLAY- SCHEME 1Q7002]

	1	2	3	4
1	EMERG SERVICE WATER SYSTEM	DIESEL-GEN A CONTROL SYSTEM	DIESEL-GEN A OUTPUT SYSTEM	DIESEL-GEN A AUX SYSTEM
2	RHR SERVICE WATER SYSTEM	DIESEL-GEN C CONTROL SYSTEM	DIESEL-GEN C OUTPUT SYSTEM	DIESEL-GEN C AUX SYSTEM
3	REMOTE SHTDWN PANEL SWITCH	CONTROL ROOM HABIT SYSTEM		BATTERY ROOM EXHAUST FANS
4	CONTN INSTR GAS SYSTEM	CONTN H_2 RECOMB	CONTN ISO SYSTEM	DRYWELL VENTIL SYSTEM
5	RX-BLDG SWGR-LC COOLING SYSTEM			STANDBY GAS TREAT SYSTEM
6				

DIV I BIS DISPLAY (LEFT)

BARRIER

	1	2	3	4
1	EMERG SERVICE WATER SYSTEM	DIESEL-GEN B CONTROL SYSTEM	DIESEL-GEN B OUTPUT SYSTEM	DIESEL-GEN B AUX SYSTEM
2	RHR SERVICE WATER SYSTEM	DIESEL-GEN D CONTROL SYSTEM	DIESEL-GEN D OUTPUT SYSTEM	DIESEL-GEN D AUX SYSTEM
3	REMOTE SHTDWN PANEL SWITCH	CONTROL ROOM HABIT SYSTEM		BATTERY ROOM EXHAUST FANS
4	CONTN INSTR GAS SYSTEM	CONTN H_2 RECOMB	CONTN ISO SYSTEM	DRYWELL VENTIL SYSTEM
5	RX-BLDG SWGR-LC COOLING SYSTEM			STANDBY GAS TREAT SYSTEM
6				

DIV II BIS DISPLAY (RIGHT)

IC601-16B DISPLAY LIGHT BOX ARRANGEMENT

SEE NOTE 3

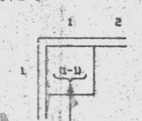

DISPLAY WINDOW CO-ORDINATE

NOTES:

1. JAY-EL PRODUCTS INC. 2 POLE MOMENTARY SWITCH. CAT. #851E603PM2SPDT10G PER GE DWG #851E603 (8856-MHH12-402-1). LAMPS ARE G.E. TYPE 387 INCANDESCENT. TRANSFORMERS ARE ELMA ENGINEERING TYPE #ZT1928, 120-24VAC 150VA. FOR PURCHASE OF DEVICES SEE E-40 SH. 5.
2. LIGHT BOX COORDINATES SHOWN IN PARENTHESIS ARE NOT INCLUDED IN INSCRIPTIONS.
3. FOR CABLE BLOCK DIAGRAM SEE E-185 SHEET 1.
4. FOR RELAY DEVELOPMENT SEE E-185 SHEET 5.

	DATE	REVISIONS	BY	CHK'D
5	11/1/82	REVISED TO INCORP. FOR #E-10809	RJE	MJ
4	5/20	REVISED NOTE 1 (DCR 85)	DEL	JB
3	4/30	ADDED JUMPERS IN PANEL IC694, A.C. POWER FROM 1Y234 & 1Y246 AND TERM. NUMBERS TO PNL IC601	RE	JB
2	11/29/81	REVISED PER SCHEME OF 97XA-1Y24617 & 97XB-1Y24617 "AS BUILT"	RS	JB
1	3/4/77	ISSUED FOR CONSTRUCTION	JW	JB

SCALE NONE | DESIGNED PAUSE | DRAWN

PENNSYLVANIA POWER & LIGHT COMPANY

ALLENTOWN, PENNSYLVANIA

SUSQUEHANNA STEAM ELECTRIC STATION – UNIT 1, UNIT 2

BECHTEL – SAN FRANCISCO

SCHEMATIC DIAGRAM BYPASS INDICATION SYSTEM (BOP) UNIT 1

JOB No.	DRAWING No.	REV.
8856	E-185 SH 10	5

D-107334 SH 10

G I P 3 5 | B Y P A S S I N D I C A T I O N S Y S B O P | W

This drawing and the design it covers are the property of BECHTEL. They are loaned and as the borrower's express agreement that they will not be reproduced, copied, loaned, exhibited, nor used except in the limited way and private use permitted by any written consent given by the lender to the borrower.

PRC APERTURE CARD

Docket #50-387
Control # 8303220117-07
Date 3/10/83 of Document:
REGULATORY DOCKET FILE

THIS DOCUMENT IS UNDER PNL ADMINISTRATIVE CONTROL. NO CHANGES CAN BE MADE WITHOUT PRIOR PNL APPROVAL.

UNCONTROLLED DOCUMENT FOR REFERENCE ONLY

I certify that the microfilmed image contained on this microform was made in the normal and regular course of business. This is a true, full, correct and complete reproduction and replacement for and/or in lieu of original documents generated by the Bechtel group of companies.

Signature DANNY Date 5-7- Camera Type MRG 1
Camera Operator

24X

D

This drawing and the design it covers are the property of BECHTEL. They are merely loaned and on the borrower's express agreement that they will not be reproduced, copied, loaned, exhibited, and used except in the limited way and private use permitted by any written consent given by the lender to the borrower.

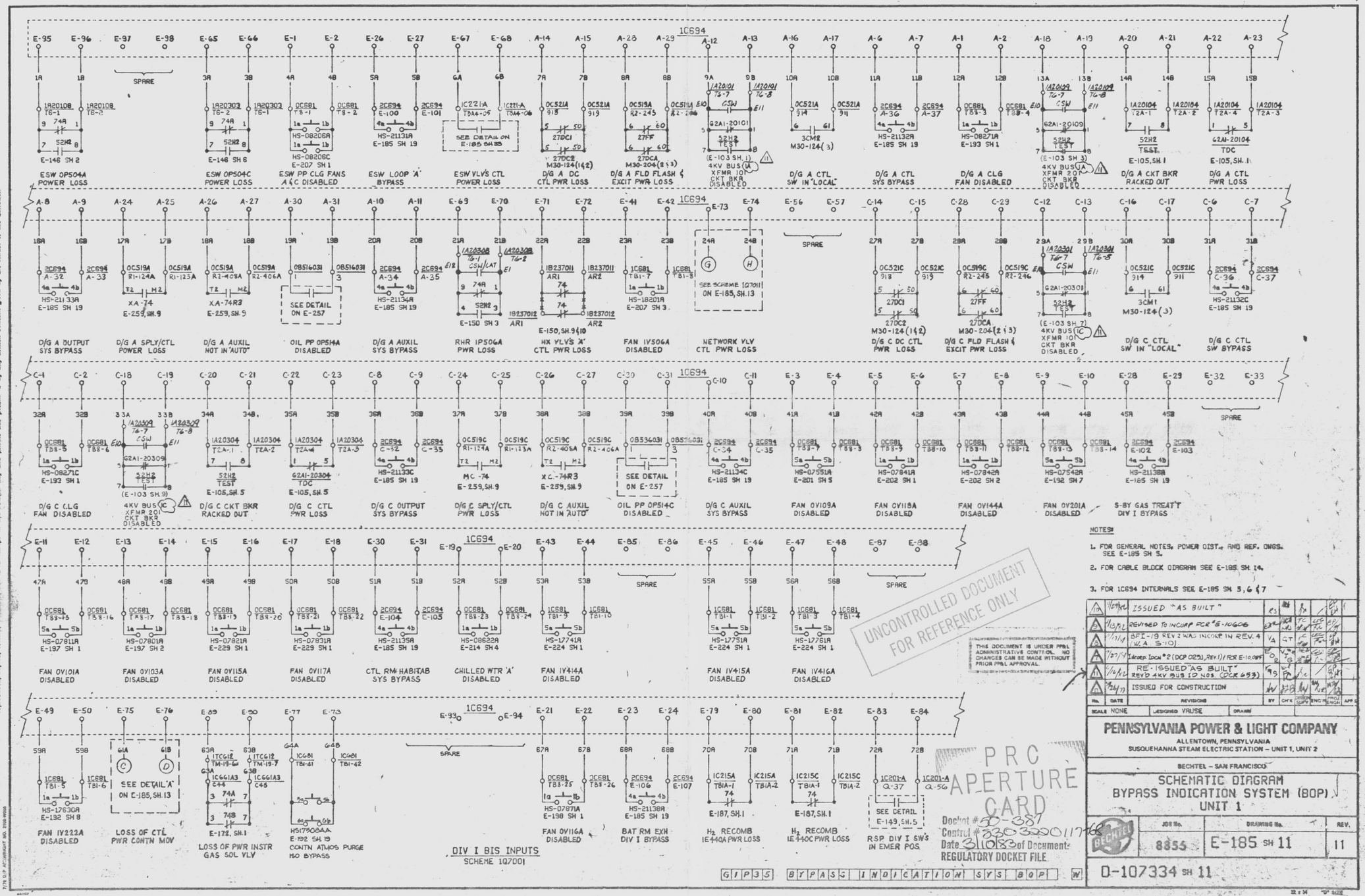

NOTES:

1. FOR GENERAL NOTES, POWER DIST., AND REF. DWGS. SEE E-185 SH 5.
2. FOR CABLE BLOCK DIAGRAM SEE E-185 SH 14.
3. FOR 1C694 INTERNALS SEE E-185 SH 5, 6 & 7

UNCONTROLLED DOCUMENT FOR REFERENCE ONLY

THIS DOCUMENT IS UNDER PP&L ADMINISTRATIVE CONTROL. NO CHANGES CAN BE MADE WITHOUT PRIOR PP&L APPROVAL.

No.	DATE	REVISIONS	BY	CH'K	ENG'G SUPV	PROJ ENGR	APP'D
A	11/6/74	ISSUED "AS BUILT"	RS	RS			
B	12/2/81	REVISED TO INCORP FCR 81-10606	EKK		TC		
C	1/11/84	BFE-19 REV 2 WAS INCORP IN REV. 4 (W.A. 5-10)	VA	GT			
D	1/27/94	Incorp. Ltr. #2 (DCP 0251, Rev 1) for E-10095	DO	VA			
E	1/4/95	RE-ISSUED "AS BUILT" REVD 4KV BUS 1D NOS. (DCR 653)	TAS	DO			
F	3/24/97	ISSUED FOR CONSTRUCTION	MW	MW			

SCALE: NONE | DESIGNED: VAUSE | DRAWN:

PENNSYLVANIA POWER & LIGHT COMPANY

ALLENTOWN, PENNSYLVANIA

SUSQUEHANNA STEAM ELECTRIC STATION – UNIT 1, UNIT 2

BECHTEL – SAN FRANCISCO

SCHEMATIC DIAGRAM BYPASS INDICATION SYSTEM (BOP) UNIT 1

JOB No.	DRAWING No.	REV.
8855	E-185 SH 11	11

D-107334 SH 11

GIP35 BYPASS INDICATION SYS BOP W

PRC APERTURE CARD

Docket # 50-387
Control # 8303220117 08
Date 3/10/83 of Document
REGULATORY DOCKET FILE

24X

I certify that the microfilmed image contained on this microform were made in the normal and regular course of business. This is a true, full, correct and complete reproduction and replacement for and/or in lieu of original documents generated by the Bechtel group of companies.

Signed RHEY Camera Operator Date 5-25-82 Camera Type MRG-1

D

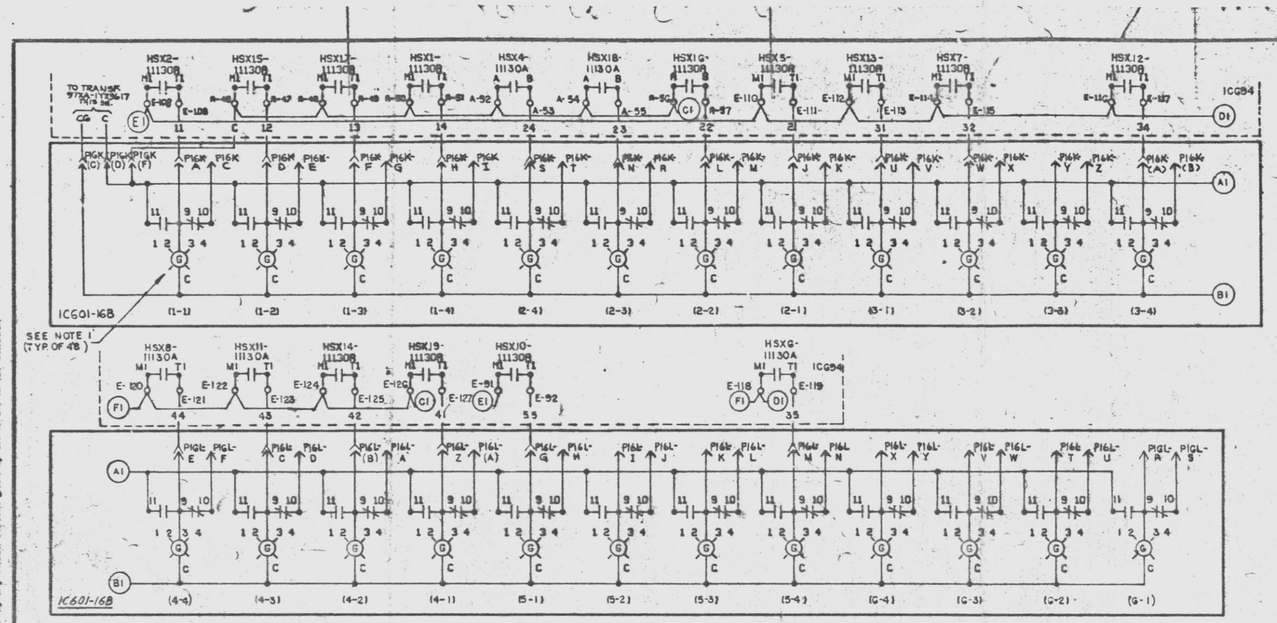

DIV I BIS DISPLAY

SCHEME 1Q7001

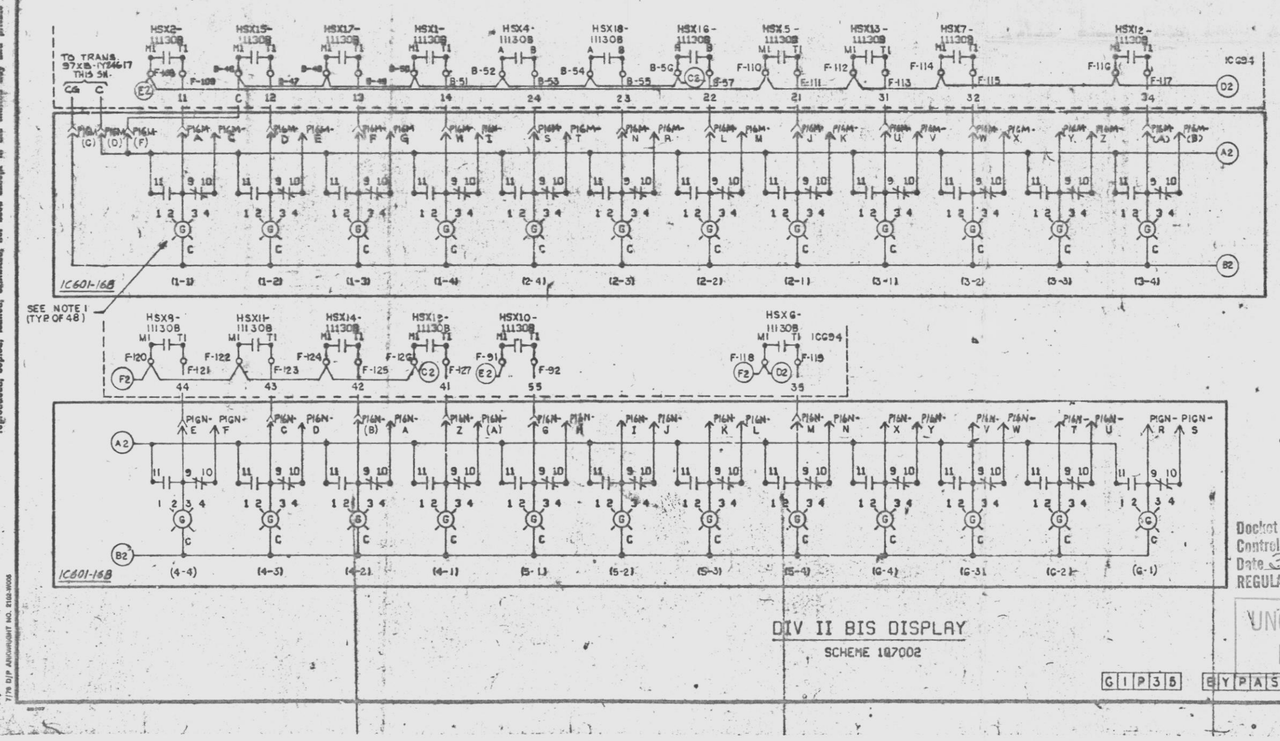

DIV II BIS DISPLAY

SCHEME 1Q7002

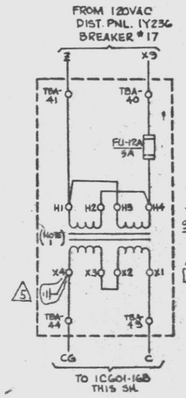

TRANSFORMER 97XA-1Y23617 120-24VAC 150VA AT PNL. IC694 [FOR DIV. I BIS DISPLAY- SCHEME 1Q7001]

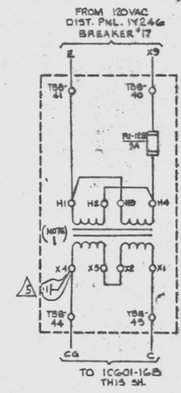

TRANSFORMER 97XB-1Y24617 120-24VAC 150VA AT PNL. IC694 [FOR DIV. II BIS DISPLAY- SCHEME 1Q7002]

	1	2	3	4
1	EMERG SERVICE WATER SYSTEM	DIESEL-GEN A CONTROL SYSTEM	DIESEL-GEN A OUTPUT SYSTEM	DIESEL-GEN A AUX SYSTEM
2	RHR SERVICE WATER SYSTEM	DIESEL-GEN C CONTROL SYSTEM	DIESEL-GEN C OUTPUT SYSTEM	DIESEL-GEN C AUX SYSTEM
3	REMOTE SHTDWN PANEL SWITCH	CONTROL ROOM HABIT SYSTEM		BATTERY ROOM EXHAUST FANS
4	CONTN INSTR GAS SYSTEM	CONTN H_2 RECOMB	CONTN ISO SYSTEM	DRYWELL VENTIL SYSTEM
5	RX-BLDG SWGR-LC COOLING SYSTEM			STANDBY GAS TREAT SYSTEM
6				

DIV I BIS DISPLAY (LEFT)

BARRIER

	1	2	3	4
1	EMERG SERVICE WATER SYSTEM	DIESEL-GEN B CONTROL SYSTEM	DIESEL-GEN B OUTPUT SYSTEM	DIESEL-GEN B AUX SYSTEM
2	RHR SERVICE WATER SYSTEM	DIESEL-GEN D CONTROL SYSTEM	DIESEL-GEN D OUTPUT SYSTEM	DIESEL-GEN D AUX SYSTEM
3	REMOTE SHTDWN PANEL SWITCH	CONTROL ROOM HABIT SYSTEM		BATTERY ROOM EXHAUST FANS
4	CONTN INSTR GAS SYSTEM	CONTN H_2 RECOMB	CONTN ISO SYSTEM	DRYWELL VENTIL SYSTEM
5	RX-BLDG SWGR-LC COOLING SYSTEM			STANDBY GAS TREAT SYSTEM
6				

DIV II BIS DISPLAY (RIGHT)

IC601-16B DISPLAY LIGHT BOX ARRANGEMENT

SEE NOTE 3

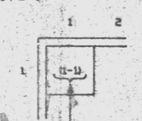

DISPLAY WINDOW CO-ORDINATE

NOTES:

1. JAY-EL PRODUCTS INC. 2 POLE MOMENTARY SWITCH. CAT. #851E603PM2SPDT10G PER GE DWG #851E603 (8856-MHH12-402-1). LAMPS ARE G.E. TYPE 387 INCANDESCENT. TRANSFORMERS ARE ELMA ENGINEERING TYPE #ZT1928, 120-24VAC 150VA. FOR PURCHASE OF DEVICES SEE E-40 SH. 5.
2. LIGHT BOX COORDINATES SHOWN IN PARENTHESIS ARE NOT INCLUDED IN INSCRIPTIONS.
3. FOR CABLE BLOCK DIAGRAM SEE E-185 SHEET 1.
4. FOR RELAY DEVELOPMENT SEE E-185 SHEET 5.

	DATE	REVISIONS	BY	CHK'D
5	11/1/82	REVISED TO INCORP. FOR #E-10809	RJE	MJ
4	5/20	REVISED NOTE 1 (DCR 85)	DEL	JB
3	4/30	ADDED JUMPERS IN PANEL IC694, A.C. POWER FROM 1Y234 & 1Y246 AND TERM. NUMBERS TO PNL IC601	RE	JB
2	11/29/81	REVISED PER SCHEME OF 97XA-1Y24617 & 97XB-1Y24617 "AS BUILT"	RS	JB
1	3/4/77	ISSUED FOR CONSTRUCTION	JW	JB

SCALE NONE | DESIGNED PAUSE | DRAWN

PENNSYLVANIA POWER & LIGHT COMPANY

ALLENTOWN, PENNSYLVANIA

SUSQUEHANNA STEAM ELECTRIC STATION – UNIT 1, UNIT 2

BECHTEL – SAN FRANCISCO

SCHEMATIC DIAGRAM BYPASS INDICATION SYSTEM (BOP) UNIT 1

JOB No.	DRAWING No.	REV.
8856	E-185 SH 10	5

D-107334 SH 10

G I P 3 5 | B Y P A S S I N D I C A T I O N S Y S B O P | W

This drawing and the design it covers are the property of BECHTEL. They are loaned and as the borrower's express agreement that they will not be reproduced, copied, loaned, exhibited, nor used except in the limited way and private use permitted by any written consent given by the lender to the borrower.

PRC APERTURE CARD

Docket #50-387
Control # 8303220117-07
Date 3/10/83 of Document:
REGULATORY DOCKET FILE

THIS DOCUMENT IS UNDER PNL ADMINISTRATIVE CONTROL. NO CHANGES CAN BE MADE WITHOUT PRIOR PNL APPROVAL.

UNCONTROLLED DOCUMENT FOR REFERENCE ONLY

I certify that the microfilmed image contained on this microform was made in the normal and regular course of business. This is a true, full, correct and complete reproduction and replacement for and/or in lieu of original documents generated by the Bechtel group of companies.

Signature DANNY Date 5-7- Camera Type MRG 1
Camera Operator

24X

D

This drawing and the design it covers are the property of BECHTEL. They are merely loaned and on the borrower's express agreement that they will not be reproduced, copied, loaned, exhibited, and used except in the limited way and private use permitted by any written consent given by the lender to the borrower.

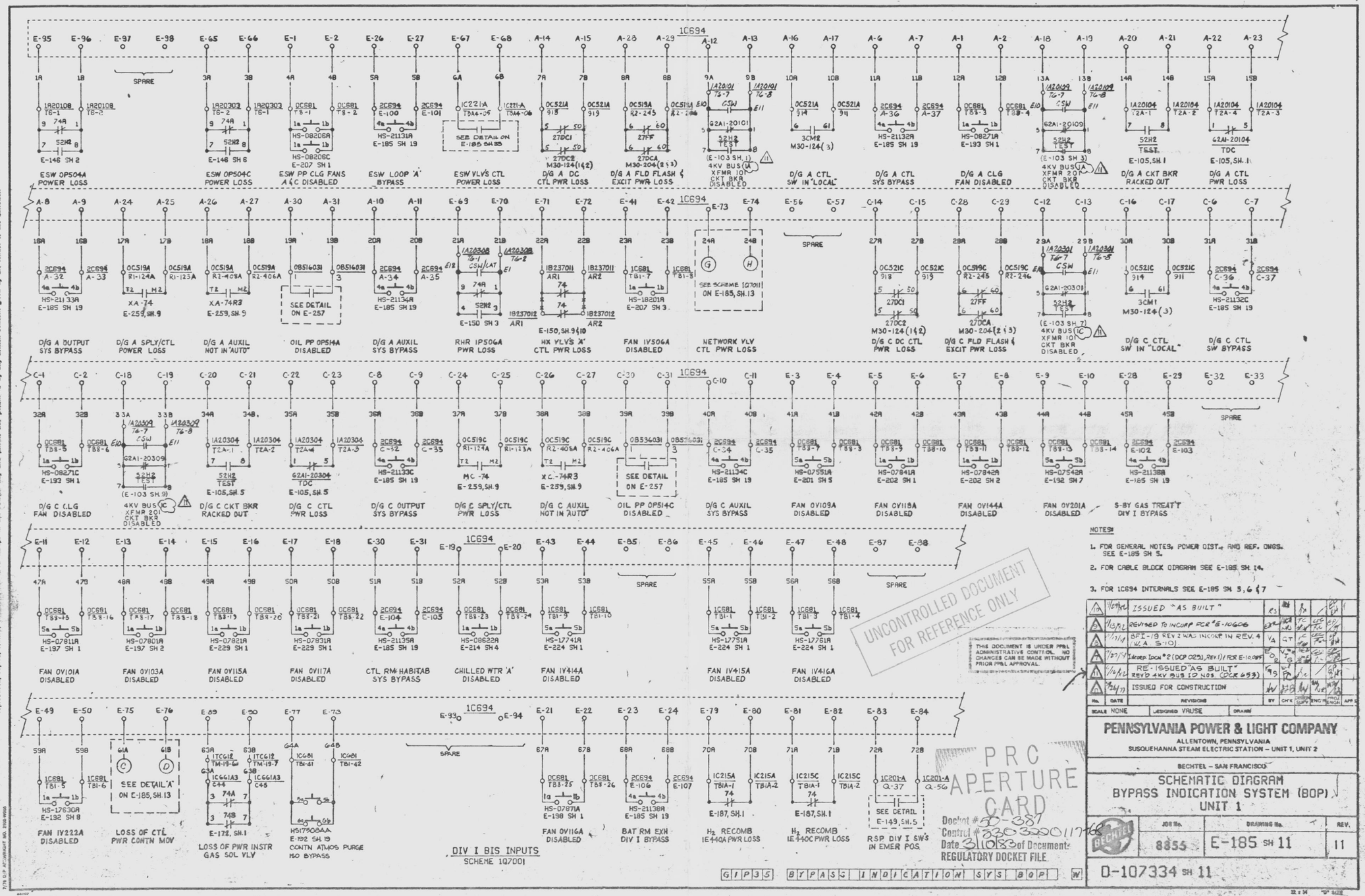

NOTES:

1. FOR GENERAL NOTES, POWER DIST., AND REF. DWGS. SEE E-185 SH 5.
2. FOR CABLE BLOCK DIAGRAM SEE E-185 SH 14.
3. FOR 1C694 INTERNALS SEE E-185 SH 5, 6 & 7

UNCONTROLLED DOCUMENT FOR REFERENCE ONLY

THIS DOCUMENT IS UNDER PP&L ADMINISTRATIVE CONTROL. NO CHANGES CAN BE MADE WITHOUT PRIOR PP&L APPROVAL.

No.	DATE	REVISIONS	BY	CH'K	ENG'G SUPV	PROJ ENGR	APP'D
A	11/6/74	ISSUED "AS BUILT"	RS	RS			
B	12/2/81	REVISED TO INCORP FCR 81-10606	EKK		TC		
C	1/11/84	BFE-19 REV 2 WAS INCORP IN REV. 4 (W.A. 5-10)	VA	GT			
D	1/27/94	Incorp. Ltr. #2 (DCP 0251, Rev 1) for E-10095	DO	VA			
E	1/4/95	RE-ISSUED "AS BUILT" REVD 4KV BUS 1D NOS. (DCR 653)	TAS	DO			
F	3/24/97	ISSUED FOR CONSTRUCTION	MW	MW			

SCALE: NONE | DESIGNED: VAUSE | DRAWN:

PENNSYLVANIA POWER & LIGHT COMPANY

ALLENTOWN, PENNSYLVANIA

SUSQUEHANNA STEAM ELECTRIC STATION – UNIT 1, UNIT 2

BECHTEL – SAN FRANCISCO

SCHEMATIC DIAGRAM BYPASS INDICATION SYSTEM (BOP) UNIT 1

JOB No.	DRAWING No.	REV.
8855	E-185 SH 11	11

D-107334 SH 11

GIP35 BYPASS INDICATION SYS BOP W

PRC APERTURE CARD

Docket # 50-387
Control # 8303220117 08
Date 3/10/83 of Document
REGULATORY DOCKET FILE

24X

I certify that the microfilmed image contained on this microform were made in the normal and regular course of business. This is a true, full, correct and complete reproduction and replacement for and/or in lieu of original documents generated by the Bechtel group of companies.

Signed RHEY Camera Operator Date 5-25-82 Camera Type MRG-1

D

This drawing and the design it covers are the property of BECHTEL. They are merely loaned and on the borrower's express agreement that they will not be reproduced, copied, loaned, exhibited, nor used except in the limited way and private use permitted by any written consent given by the lender to the borrower.

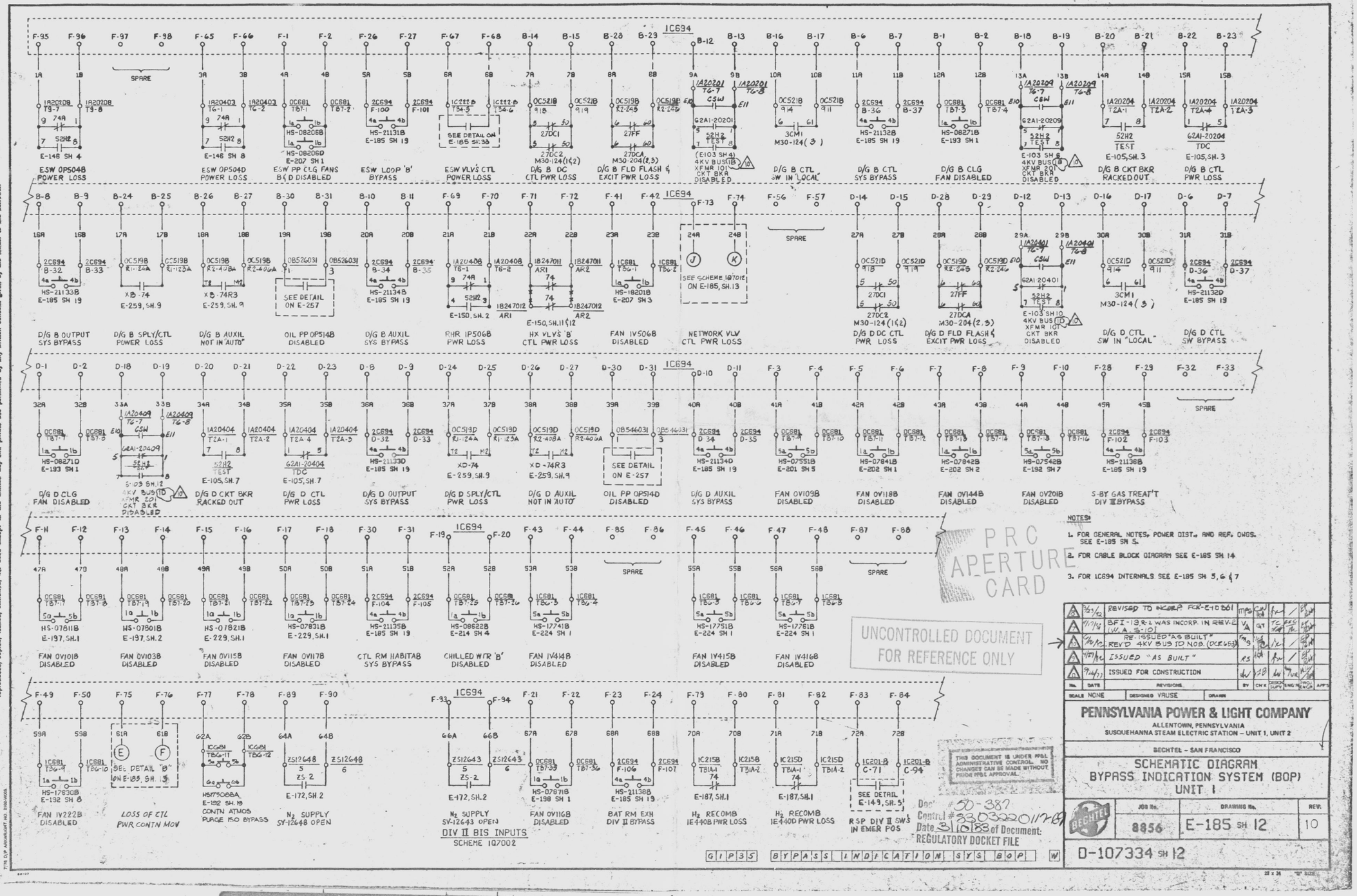

24X

I certify that the microfilmed image contained on this microform were made in the normal and regular course of business. This is a true, full, correct and complete reproduction and replacement for and/or in lieu of original documents generated by the Bechtel group of companies.
Signed RHEY Camera Operator Date 6-25-88 Camera Type MRG-1

This drawing and the design it covers are the property of BECHTEL. They are merely loaned and on the borrower's express agreement that they will not be reproduced, copied, loaned, exhibited, or used except in the limited way and private use permitted by any written consent given by the lender to the borrower.

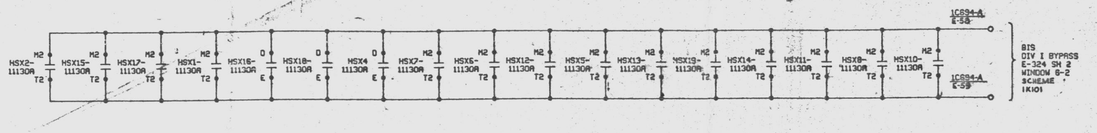

BIS ANNUNCIATION INPUT DIV I

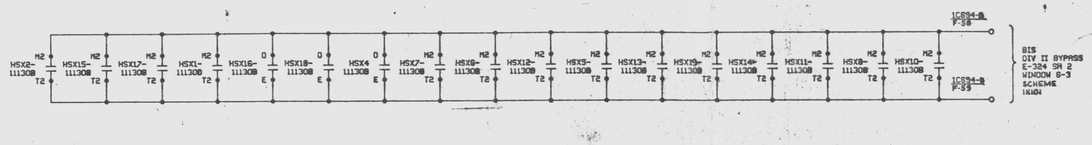

BIS ANNUNCIATION INPUT DIV II

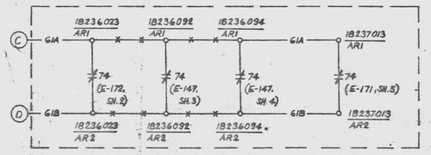

DETAIL "A"
(REF: E-185,SH.11)

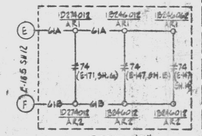

DETAIL "B"
(REF: E-185, SH.12)

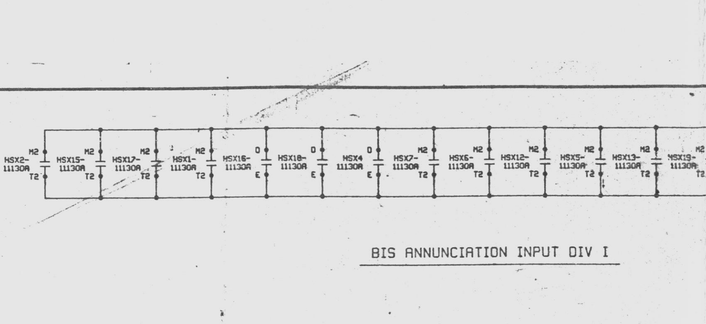

F/C-PK
SCHEME NO 1Q7011

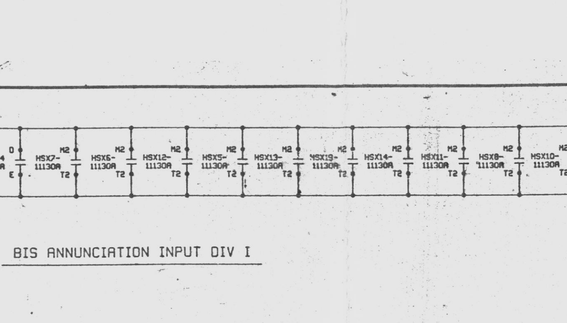

F/C-RK
SCHEME NO 1Q7012

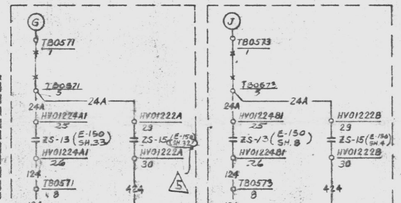

PRC APERTURE CARD

UNCONTROLLED DOCUMENT FOR REFERENCE ONLY

NOTES:
1. FOR GENERAL NOTES AND RELAY DEVELOPMENTS SEE E-185 SHEET 5.

THIS DOCUMENT IS UNDER PSP&L CONTROL AGAINST NATIVE CONTROL. NO CHANGES CAN BE MADE WITHOUT PRIOR PSP&L APPROVAL.

Docket # 50-387
Control # 8303220117-70
Date 3/10/83 of Document:
REGULATORY DOCKET FILE

A	12/19	REVISED PER DCR 42	VTS			
A	5/16	REVISED AS BUILT	SK	JD	LL	
A	3/19	REVISED BLOCK DIAGRAM 35 SHOWN & ADDED DETAIL "B"				
A	12/19	REVD DWG REF FOR 42 & ISSUED "AS BUILT"	GS	RK		
A	7/17	ISSUED FOR CONSTRUCTION				
NO.	DATE	REVISIONS	BY	CHK'D	ENG'G	APP'D

SCALE NONE | DESIGNED R. VRUSE | DRAWN

PENNSYLVANIA POWER & LIGHT COMPANY
ALLENTOWN, PENNSYLVANIA
SUSQUEHANNA STEAM ELECTRIC STATION – UNIT 1, UNIT 2

BECHTEL – SAN FRANCISCO

SCHEMATIC DIAGRAM BYPASS INDICATION SYSTEM (BOP) UNIT 1

JOB No.	DRAWING No.	REV.
8856	E-185 SH 13	5

D-107334 SH 13

Q1P35 BYPASS INDICATION SYS BOP

24X

I certify that the microfilmed image contained on this microform were made in the normal and regular course of business. This is a true, full, correct and complete reproduction and replacement for and/or in lieu of original documents generated by the Bechtel group of companies.
Signature DANNY Date 5-7 Camera Type MRG 1
Camera Operator

D

This drawing and the design it covers are the property of BECHTEL. They are merely loaned and on the borrower's express agreement that they will not be reproduced, copied, loaned, exhibited, or used except in the limited way and private use permitted by any written consent given by the lender to the borrower.

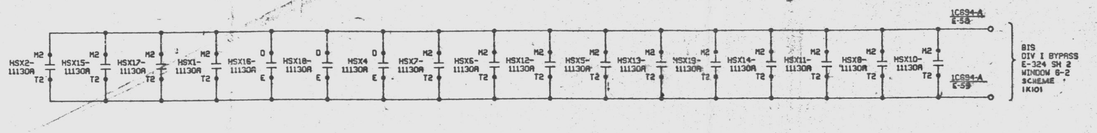

BIS ANNUNCIATION INPUT DIV I

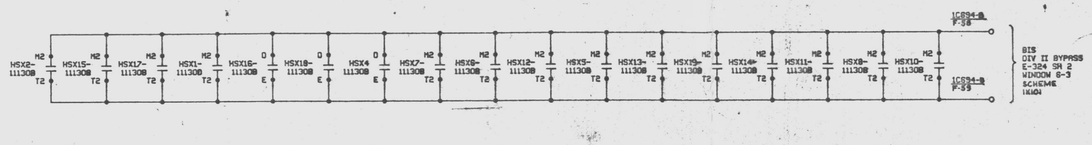

BIS ANNUNCIATION INPUT DIV II

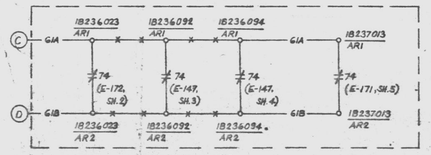

DETAIL "A"
(REF: E-185,SH.11)

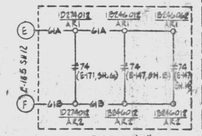

DETAIL "B"
(REF: E-185, SH.12)

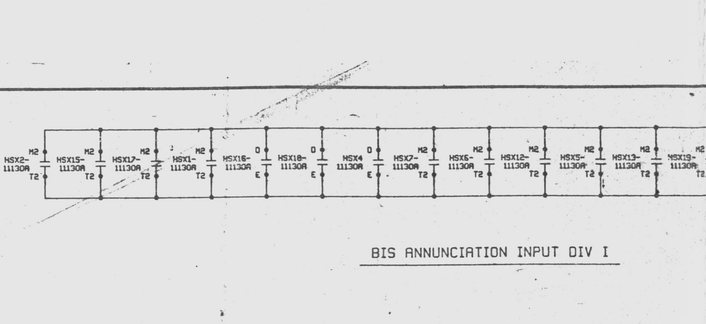

F/C-PK
SCHEME NO 1Q7011

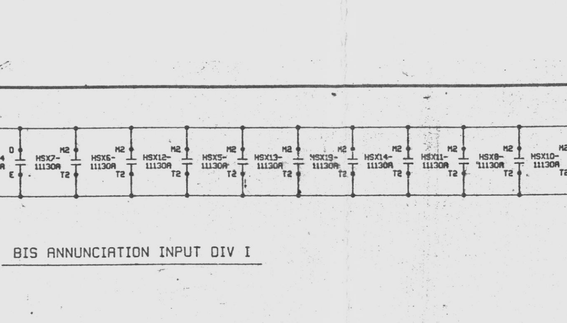

F/C-RK
SCHEME NO 1Q7012

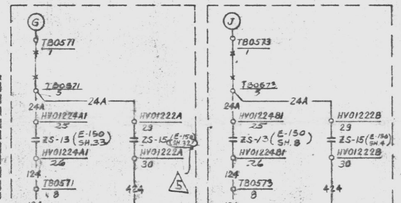

PRC APERTURE CARD

UNCONTROLLED DOCUMENT FOR REFERENCE ONLY

NOTES:
1. FOR GENERAL NOTES AND RELAY DEVELOPMENTS SEE E-185 SHEET 5.

THIS DOCUMENT IS UNDER PSP&L CONTROL AGAINST NATIVE CONTROL. NO CHANGES CAN BE MADE WITHOUT PRIOR PSP&L APPROVAL.

Docket # 50-387
Control # 8303220117-70
Date 3/10/83 of Document:
REGULATORY DOCKET FILE

A	12/19	REVISED PER DCR 42	VTS			
A	5/16	REVISED AS BUILT	SK	JD	LL	
A	3/19	REVISED BLOCK DIAGRAM 35 SHOWN & ADDED DETAIL "B"				
A	12/19	REVD DWG REF FOR 42 & ISSUED "AS BUILT"	GS	RK		
A	7/17	ISSUED FOR CONSTRUCTION				
NO.	DATE	REVISIONS	BY	CHK'D	ENG'G	APP'D

SCALE NONE | DESIGNED R. VRUSE | DRAWN

PENNSYLVANIA POWER & LIGHT COMPANY
ALLENTOWN, PENNSYLVANIA
SUSQUEHANNA STEAM ELECTRIC STATION – UNIT 1, UNIT 2

BECHTEL – SAN FRANCISCO

SCHEMATIC DIAGRAM BYPASS INDICATION SYSTEM (BOP) UNIT 1

JOB No.	DRAWING No.	REV.
8856	E-185 SH 13	5

D-107334 SH 13

Q1P35 BYPASS INDICATION SYS BOP

24X

I certify that the microfilmed image contained on this microform were made in the normal and regular course of business. This is a true, full, correct and complete reproduction and replacement for and/or in lieu of original documents generated by the Bechtel group of companies.
Signature DANNY Date 5-7 Camera Type MRG 1
Camera Operator

D

This drawing and the design it covers are the property of BECHTEL. They are merely loaned and on the borrower's express agreement that they will not be reproduced, copied, loaned, exhibited, nor used except in the limited way and private use permitted by any written consent given by the lender to the borrower.

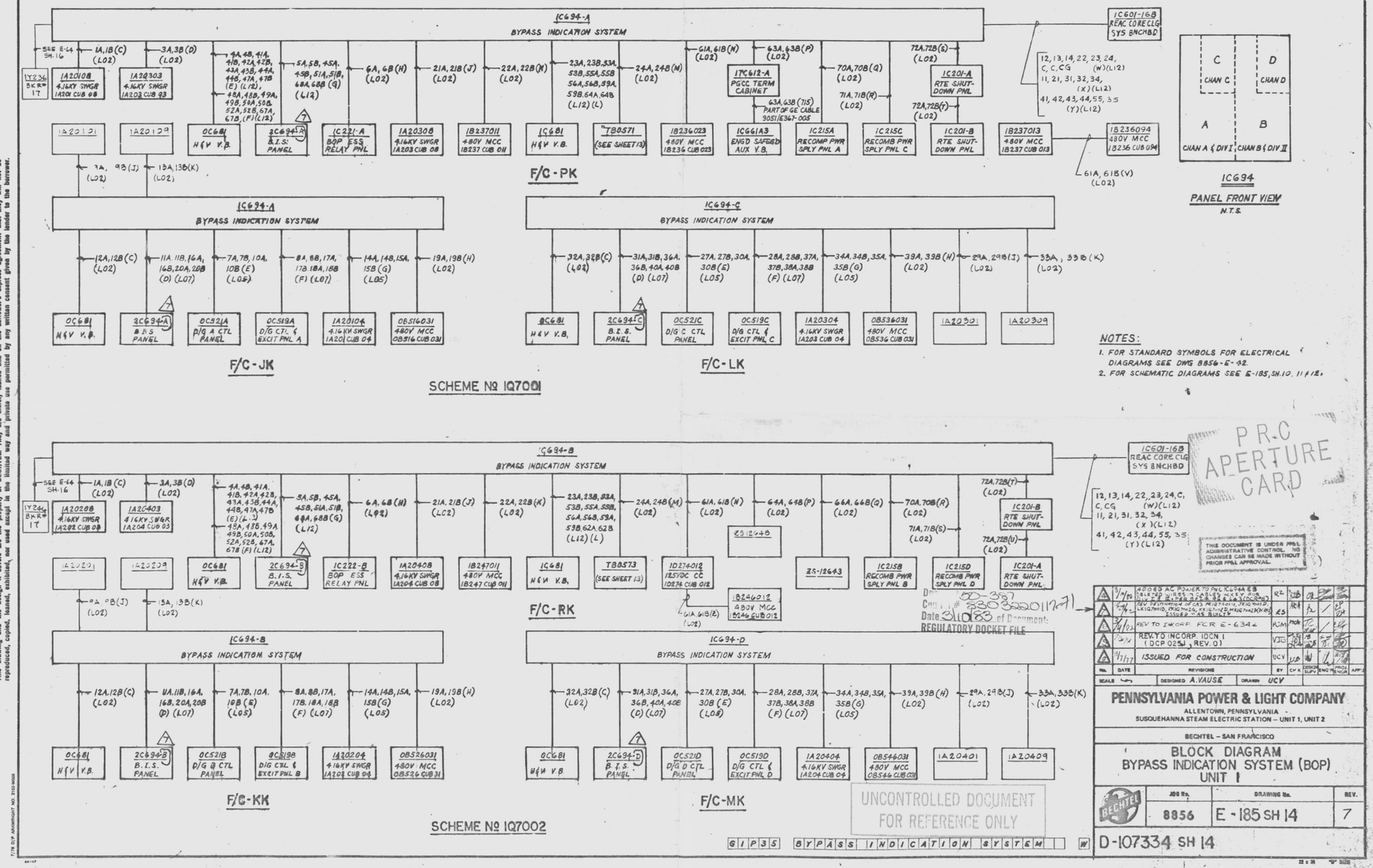

P.R.C APERTURE CARD

THIS DOCUMENT IS UNDER PP&L ADMINISTRATIVE CONTROL. NO CHANGES CAN BE MADE WITHOUT PRIOR PP&L APPROVAL.

Document # 50-387 8308220117-7
Date 8/10/83 of Document:
REGULATORY DOCKET FILE

UNCONTROLLED DOCUMENT FOR REFERENCE ONLY

No.	DATE	REVISIONS	BY	CH'K	DESIGN SUPV	PROJ ENG'R	PROJ MGR	APP'D
4	3/9/90	ADDED AC POWER TO PNL C694A EB 2A1202 & EB 2B1202 & 2A1203 & 2B1203 CHANGED 2C694-A TO 2C694-C	RZ	MB	DB			
3	8/4/87	REV DESTINATION OF CAS PKG7301H, 7302H(U1) LK1Q7001D, PKG7402G, K5 (U2) AND PKG7401H, 7402K (U1&2) ISSUED AS-BUILTS	KLS	NCH	RL			
2	3/4/87	REV TO INCORP. FCR E-634	RJM	PCH	DB			
1	3/4/87	REV TO INCORP. IDCN 1 (DCP 025J, REV. 0)	VJC	MB	DB			
0	7/11/17	ISSUED FOR CONSTRUCTION	UCV	MB	MB			

SCALE — DESIGNED A.VAUSE DRAWN UCV

PENNSYLVANIA POWER & LIGHT COMPANY
ALLENTOWN, PENNSYLVANIA
SUSQUEHANNA STEAM ELECTRIC STATION – UNIT 1, UNIT 2

BECHTEL – SAN FRANCISCO

BLOCK DIAGRAM BYPASS INDICATION SYSTEM (BOP) UNIT 1

JOB No.	DRAWING No.	REV.
8856	E-185 SH 14	7

D-107334 SH 14

G I P 3 5 | B Y P A S S | I N D I C A T I O N | S Y S T E M | W

7/78 DLP ARCHIVIST NO. 2102-M005

D

This drawing and the design it covers are the property of BECHTEL. They are not to be reproduced, copied, loaned, exhibited, used except in the limited way and for the purpose for which they have been furnished, without the written permission of Bechtel. Any such reproduction, copying, loaning, exhibiting or other use without such permission, or for any purpose not specifically authorized by Bechtel, will be wrongful and a copyright and property infringement. Ownership of all rights in the design and drawings, and in any modifications thereof, including any rights to patents, copyrights or trade secrets, shall remain with Bechtel. Any use of this design or drawing on any project other than that for which it is expressly prepared and furnished by Bechtel, or any extension of use on the project beyond that agreed upon by Bechtel, or any publication of the design or drawing without the express written consent of Bechtel, shall be wrongful and a copyright and property infringement, and Bechtel shall be entitled to compensation and damages for any such use, extension or publication. Any recipient of this design or drawing, by his acceptance or use thereof, expressly consents that any such use, extension or publication thereof shall constitute an infringement and that damages may be assessed therefor against him in favor of Bechtel. Nothing herein shall be construed to limit any other rights or remedies available to Bechtel under the laws pertaining to the protection of its property and rights in the design and drawings.

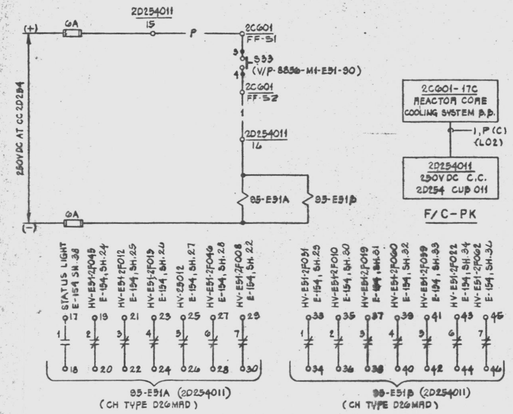

RCIC SYSTEM BYPASS AUX CONTROL

SCHEME: 2Q0900

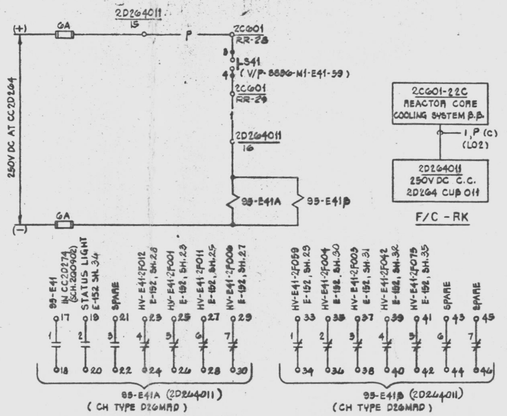

HPCI SYSTEM BYPASS AUX CONTROL

SCHEME: 2Q0901

NOTES:

1. FOR STANDARD SYMBOLS FOR ELECTRICAL DIAGRAMS SEE DWG. 8856-E-41.
2. ALL DEVICE NOS. TO BE SUFFIXED BY CONTROL CENTER CUBICLE NO.

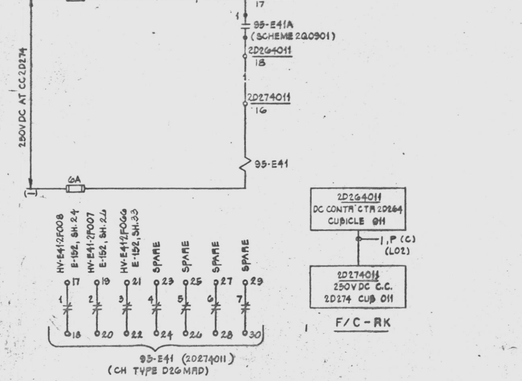

HPCI SYSTEM BYPASS AUX RELAY

SCHEME: 2Q0802

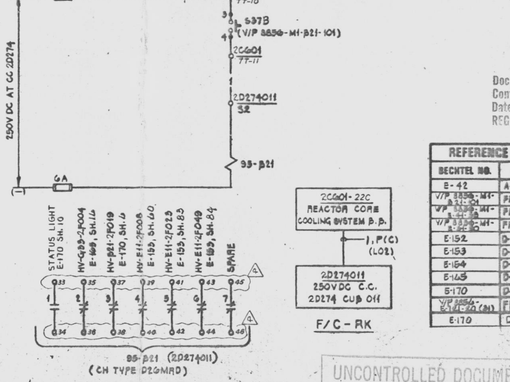

NSS SHUTOFF SYSTEM BYPASS AUX CONTROL

SCHEME: 2Q0903

Document # 50-387
Control # 8803220017-702
Date 3/10/88 of Document:
REGULATORY DOCKET FILE

PRC APERTURE CARD

REFERENCE DWG'S.	
BECHTEL NO.	PL. NO.
E-42	A-107194
V/P 8856-M1-B21-30	FP167290
V/P 8856-M1-B21-101	FP167290
V/P 8856-M1-E91-30	FP125010
E-152	D-107301
E-153	D-107302
E-154	D-107303
E-165	D-107314
E-170	D-107313
V/P 8856-M1-E51-30 (3H)	FP103810
E-170	D-107313

NO.	DATE	REVISIONS	BY	CHK'D	ENGR'G APPR'D	BECHTEL APPR'D	NRC APPR'D
4	9/16/87	REV TO INCORP PCR E-7770	JJW	MK	[illegible]	[illegible]	[illegible]
3	5/4/87	INCLUDE PCR E-8760	JJW	[illegible]	[illegible]	[illegible]	[illegible]
2	3/4/87	REV. PER DCP #650	JJW	[illegible]	[illegible]	[illegible]	[illegible]
1	1/20/87	REV. PNL TERM. (DCR 42)	DG	[illegible]	[illegible]	[illegible]	[illegible]
0	11/17	ISSUED FOR CONSTRUCTION	MPS	JMH	[illegible]	[illegible]	[illegible]

SCALE ~ DESIGNED J.WONG DRAWN MPSANTOS

PENNSYLVANIA POWER & LIGHT COMPANY
ALLENTOWN, PENNSYLVANIA
SUSQUEHANNA STEAM ELECTRIC STATION — UNIT 1, UNIT 2

BECHTEL — SAN FRANCISCO

SCHEMATIC DIAGRAM
BYPASS INDICATION SYSTEM
UNIT 2

JOB No.	DRAWING No.	REV.
8856	E-185 SH 15	4
D-107334 SH 15		

UNCONTROLLED DOCUMENT
FOR REFERENCE ONLY

GEPDB SCHEM DV PASS INDICATION DV W

24X

I certify that the microfilmed images contained on this microform were made in the normal and regular course of business. This is a true, full, correct and complete reproduction and replacement for and/or in lieu of original documents prepared by the Bechtel system of companies.
Signed P.C. AKINS Date 12-2-87 Camera Type MRG 1
Camera Operator

D

This drawing and the design it covers are the property of BECHTEL. They are merely loaned and on the borrower's express agreement that they will not be reproduced, copied, loaned, exhibited, nor used except in the limited way and private use permitted by any written consent given by the lender to the borrower.

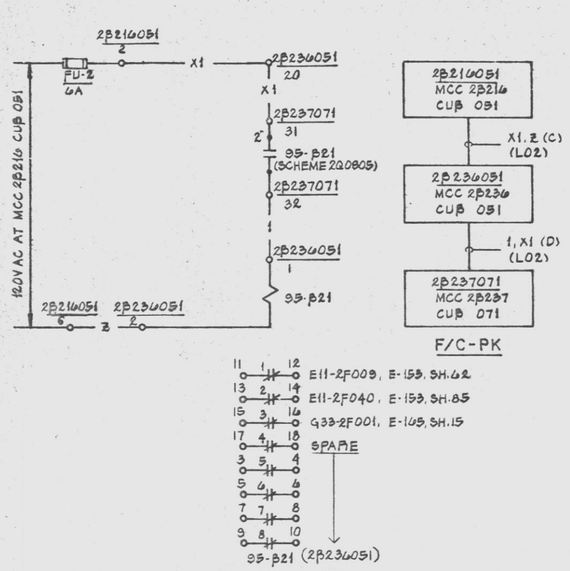

BYPASS INDICATION SYSTEM-AUX CONTROL

SCHEME NO: 2Q0804

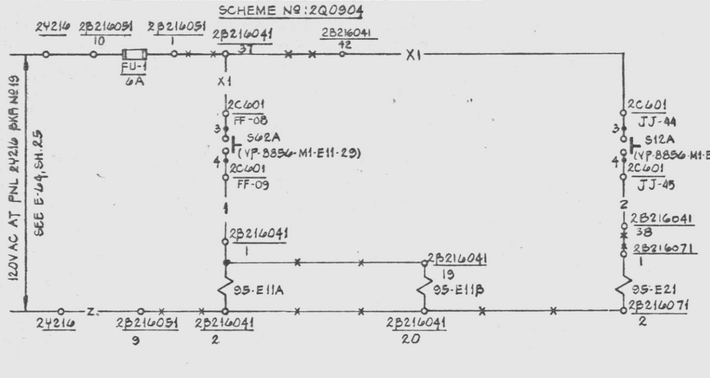

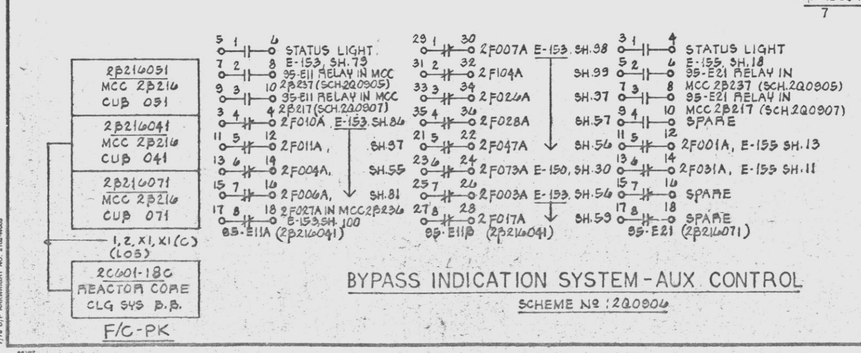

BYPASS INDICATION SYSTEM-AUX CONTROL

SCHEME NO: 2Q0806

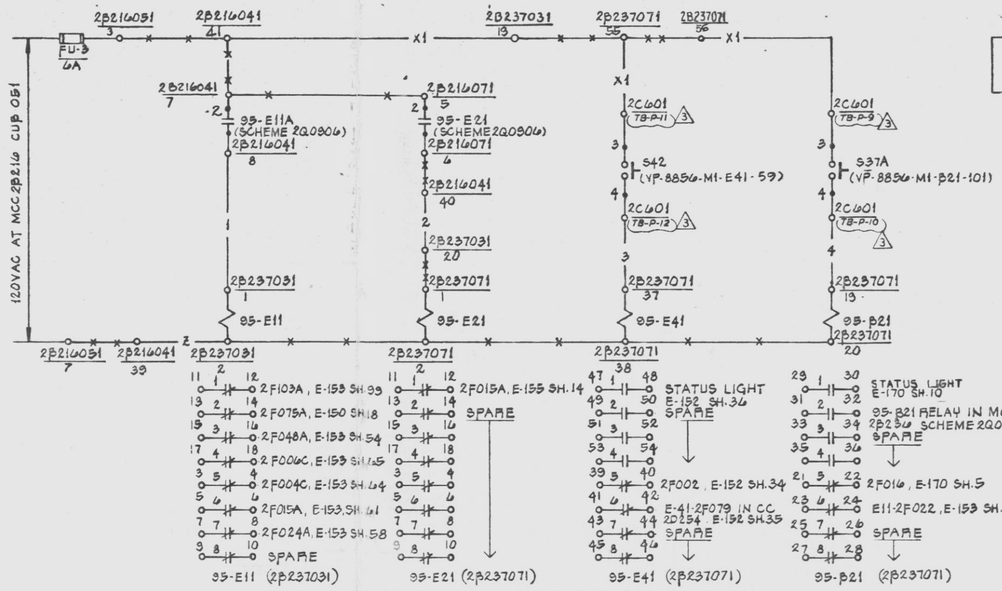

BYPASS INDICATION SYSTEM-AUX CONTROL

SCHEME NO: 2Q0805

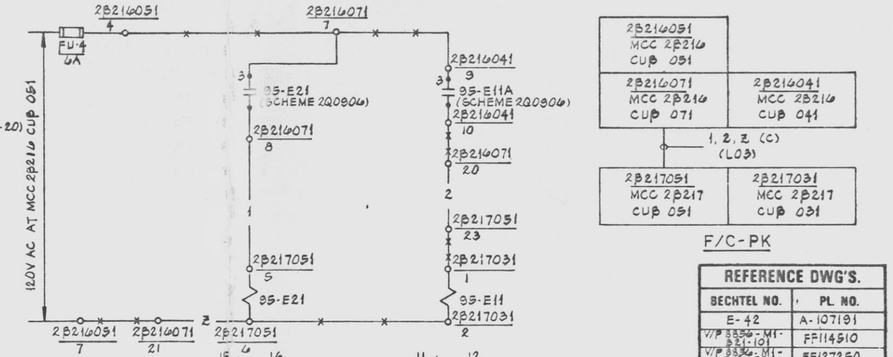

BYPASS INDICATION SYSTEM-AUX CONTROL

SCHEME NO: 2Q0807

NOTES:

1. FOR STANDARD SYMBOLS FOR ELECTRICAL DIAGRAMS SEE DWG. 8856-E-42.
2. ALL DEVICE NOS TO BE SUFFIXED BY MOTOR CONTROL CENTER CUBICLE NO.
3. ALL 95 RELAYS ARE CUTLER-HAMMER TYPE D26MA.

REFERENCE DWG'S.	
BECHTEL NO.	PL. NO.
E-42	A-107191
W/P 8856-M1-B21-101	FF114510
W/P 8856-M1-E41-59	FF127250
E-150	D-107299
E-152	D-107301
E-153	D-107302
E-155	D-107304
E-165	D-107314
W/P8856-E118	FF103180
E-64	D-107213
W/P 8856-M1-B11-29	FF-124510
E-170	D-107319

5	5/14/82	REV. PER FCR-E-8748	JK	RCS		
4	3/3/82	REV. PER DCP. 650	YAK	WSH		
3	1/5/82	REV. PNL TERM & ADDED JUMPER (DCR 42)	P.S	RS		
2	11/1/77	ISSUED FOR CONSTRUCTION	mps			
NO.	DATE	REVISIONS	BY	CHK'K	DESIGN ENGR'G	PROJ'T MGR. APP'D

SCALE: C=0 | DESIGNED J.WONG | DRAWN M.SANTOS

PENNSYLVANIA POWER & LIGHT COMPANY

ALLENTOWN, PENNSYLVANIA

SUSQUEHANNA STEAM ELECTRIC STATION — UNIT 1, UNIT 2

BECHTEL — SAN FRANCISCO

SCHEMATIC DIAGRAM
BYPASS INDICATION SYSTEM
UNIT 2

JOB No.	DRAWING No.	REV.
8856	E-185 SH 16	3

D-107334 SH16

G2P35 SCHEM BYPASS INDICATION SY W

UNCONTROLLED DOCUMENT
FOR REFERENCE ONLY

PRC APERTURE CARD
Docket # 50-387
Control # 8303220177-73
Date 3/10/83 of Docu...
REGULATORY DOCKET FI...

D

24X

I certify that the microfilmed image contained on this microform were made in the normal and regular course of business. This is a true, full, correct and complete reproduction and replacement for and/or in lieu of original documents generated by the Bechtel group of companies.
Signed DANNY Date 3-20-83 Camera Type MRC 1
Camera Operator

This drawing and the design it covers are the property of BECHTEL. They are merely loaned and on the borrower's express agreement that they will not be reproduced, copied, loaned, exhibited, nor used except in the limited way and purpose permitted by any written consent given by the lender to the borrower.

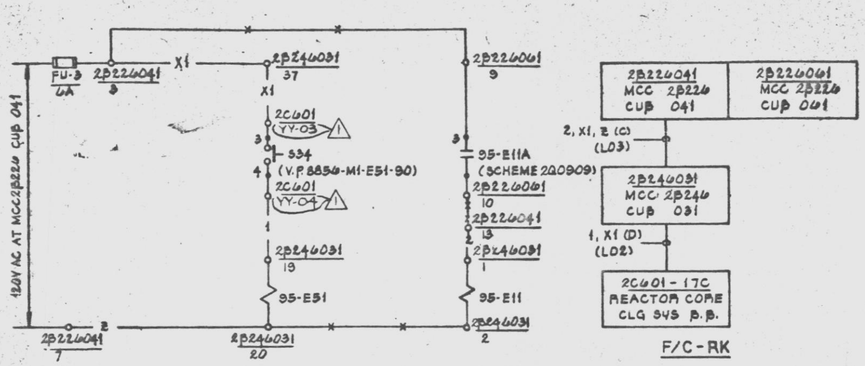

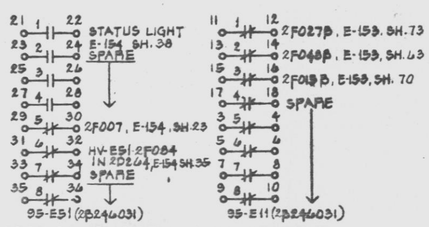

BYPASS INDICATION SYSTEM - AUX CONTROL

SCHEME NO.: 2Q0908

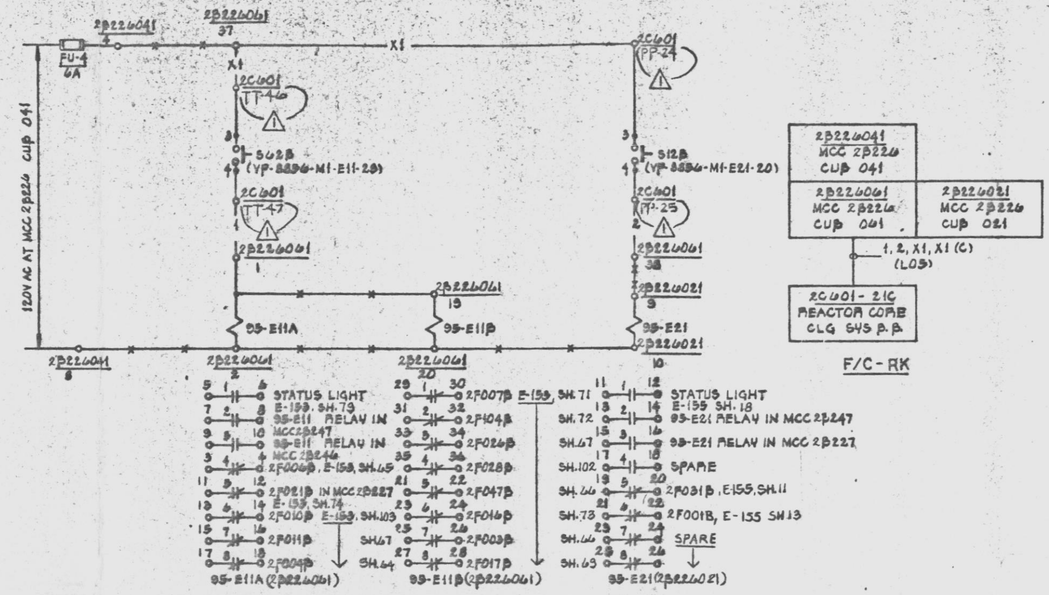

BYPASS INDICATION SYSTEM - AUX CONTROL

SCHEME NO.: 2Q0909

NOTES:

1. FOR STANDARD SYMBOL FOR ELECTRICAL DIAGRAM SEE DWG 8856-E-42.
2. ALL DEVICE NOS. TO BE SUFFIXED BY MOTOR CONTROL CENTER CUBICILE NO.
3. ALL 95 RELAYS ARE CUTLER-HAMMER TYPE DB(MA.

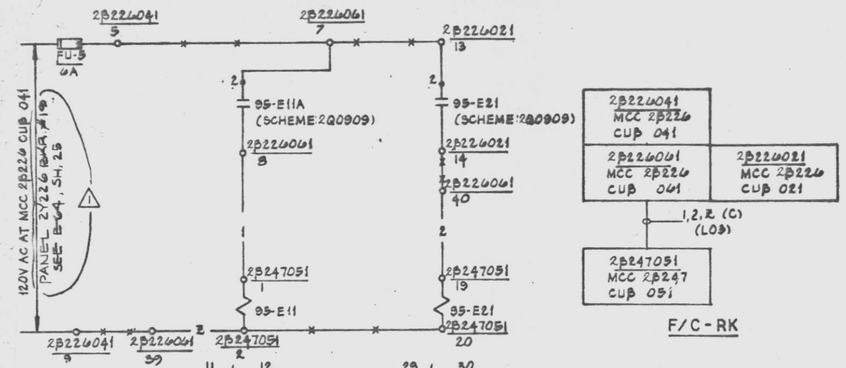

BYPASS INDICATION SYSTEM - AUX CONTROL

SCHEME NO.: 2Q0910

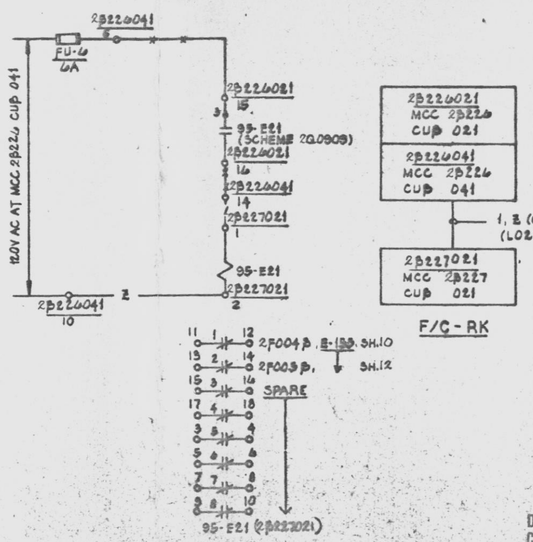

BYPASS INDICATION SYSTEM - AUX CONTROL

SCHEME NO. 2Q0911

PRC APERTURE CARD

UNCONTROLLED DOCUMENT FOR REFERENCE ONLY

REFERENCE DWG'S.	
BECHTEL NO.	PL. NO.
E-42	A-107191
V/P 8856-M1-E11	FF114810
V/P 8856-M1-E21	FF127230
E-153	D-107302
E-154	D-107303
E-155	D-107304
E-150	D-107299
V/P 8856-E118	FF-109180
V/P 8856-M1-E21	FF-124910

NO.	DATE	REVISIONS	BY	CHK'D	ENGR SUPV	ENGR MGR	APP'D
	2/24/82	REV. PNL. TERM. & DWG. REF. (DCR 42)	PG	RS	LA		
	11/1/77	ISSUED FOR CONSTRUCTION	TPS	RJH	LA		

SCALE: 3/4" | DESIGNED: J. WONG | DRAWN: TP SANTOS

PENNSYLVANIA POWER & LIGHT COMPANY
ALLENTOWN, PENNSYLVANIA
SUSQUEHANNA STEAM ELECTRIC STATION – UNIT 1, UNIT 2

BECHTEL – SAN FRANCISCO

SCHEMATIC DIAGRAM
BYPASS INDICATION SYSTEM
UNIT 2

ASS No.	DRAWING No.	REV.
8856	E-185 SH 17	1

D-107334 SH 17

Docket # 50-387
Control # 8303220174
Date 3/10/83 of Document
REGULATORY DOCKET FILE

G2P33 SCHEM BYPASS INDICATION SYS W

24X

I certify that the microfilmed image contained on this microform were made in the normal and regular course of business. This is a true, full, correct and complete reproduction and replacement for and/or in lieu of original documents generated by the Bechtel group of companies.
Signed JACINTO Camera Operator Date 3-22 Camera Type MRC I

D

This drawing and the design it covers are the property of BECHTEL. They are merely loaned and on the borrower's express agreement that they will not be reproduced, copied, loaned, exhibited, nor used except in the limited way and private use permitted by any written consent given by the lender to the borrower.

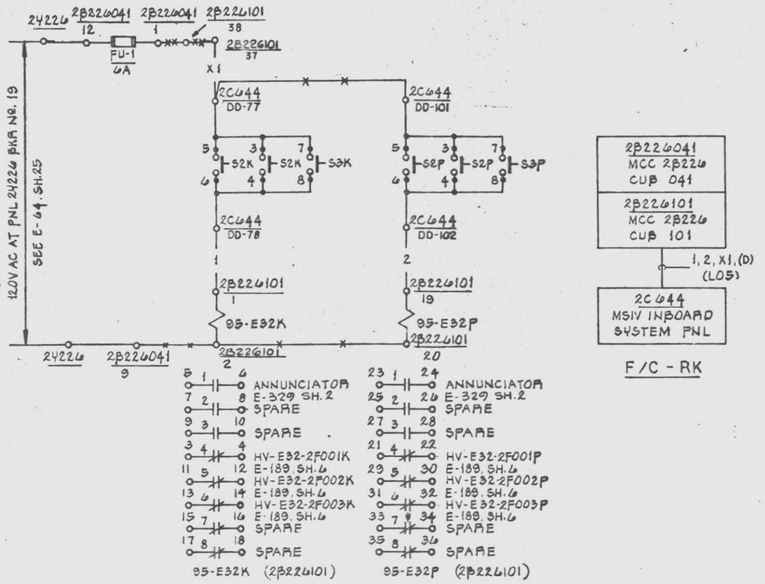

BYPASS INDICATION SYSTEM - AUX CONTROL

SCHEME NO.: 2Q0912

F/C - RK

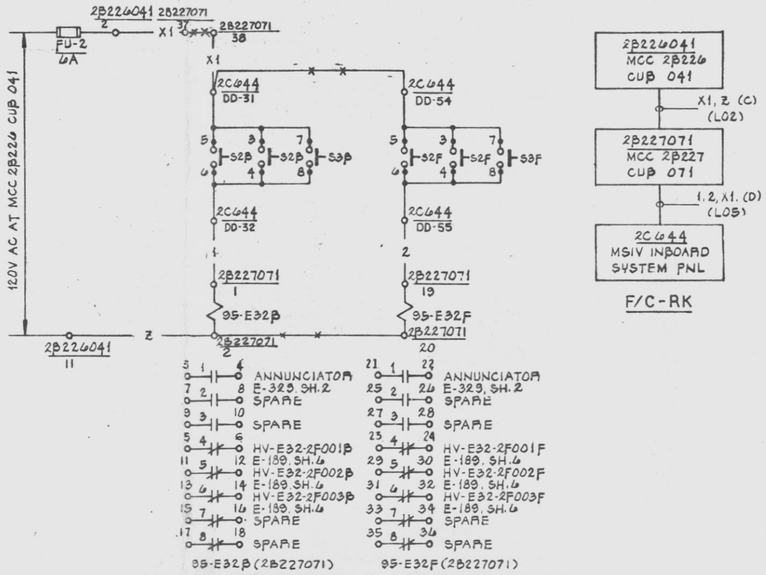

BYPASS INDICATION SYSTEM - AUX CONTROL

SCHEME NO.: 2Q0913

F/C-RK

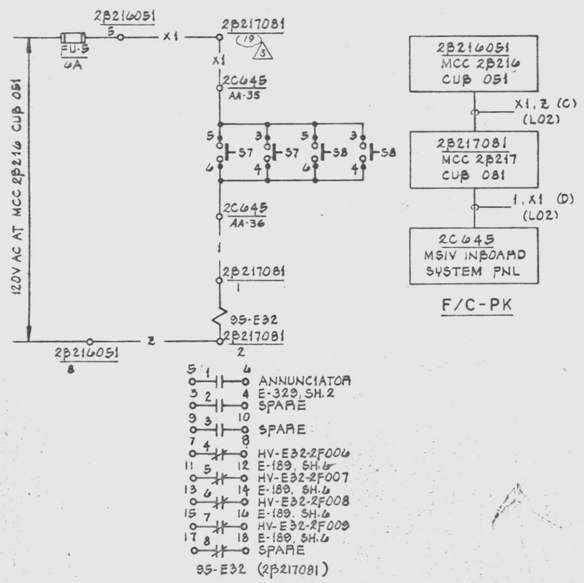

BYPASS INDICATION SYSTEM - AUX CONTROL

SCHEME NO.: 2Q0914

F/C-PK

NOTES:

1. FOR STANDARD SYMBOL FOR ELECTRICAL DIAGRAM SEE DWG 8856-E-42.
2. ALL DEVICE NOS. TO BE SUFFIXED BY MOTOR CONTROL CENTER CUBICLE NO.
3. ALL 95 RELAYS ARE CUTLER-HAMMER TYPE D26MA.
4. * INDICATES FIELD TO CHANGE CONTACT FROM N.O. TO N.C.

PRC APERTURE CARD

UNCONTROLLED DOCUMENT FOR REFERENCE ONLY

REFERENCE DWG'S.	
BECHTEL NO.	PL. NO.
E-42	A-107181
W/P8856-E32-1	FF127050
E-189	D-107338
E-329	D-107478
W/P8856-E118	FF103180

NO.	DATE	REVISIONS	BY	CHK'R	ENG'R SUPV	ENG'R	PROJ ENGR	APP'D
3	12/8/82	REV TO INCORP PCR E-7704	JC	MK	MK	EC	EC	
2	5/3/82	REV TERM. NOS (DCR 42)	JC	JW	M	EC	EC	
1	1/20/82	REV. TO INCORP DCN #1 (DCR 9) & ADDED JUMPERS (DCR 42)	RG	KS	M	EC	EC	
0	11/1/77	ISSUED FOR CONSTRUCTION.	MPS	GW	MK TJD	EC	EC	

SCALE: NONE | DESIGNED J WONG | DRAWN MPSANTOS

PENNSYLVANIA POWER & LIGHT COMPANY

ALLENTOWN, PENNSYLVANIA

SUSQUEHANNA STEAM ELECTRIC STATION – UNIT 1, UNIT 2

BECHTEL – SAN FRANCISCO

SCHEMATIC DIAGRAM
BYPASS INDICATION SYSTEM
UNIT 2

JOB No.	DRAWING No.	REV.
8856	E-185 SH 18	3

D-107334 SH18

Doc'mt # 50-387
Contrl # 8308290117-75
Date 8/10/83 of Document:
REGULATORY DOCKET FILE

G2P35 SCHEM BYPASS INDICATION SY W

22 x 34 "D" SIZE

24X

I certify that the microfilmed image contained on this microform were made in the normal and regular course of business. This is a true, full, correct and complete reproduction and replacement for and/or in lieu of original documents generated by the Bechtel group of companies.
Signed _____ Date 12-13-82 Camera Type _____
Camera Operator

D

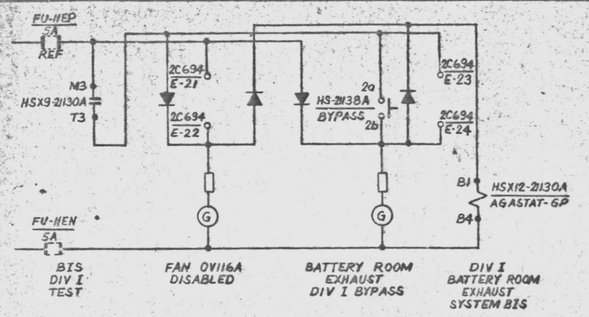

DIV I BATTERY ROOM EXHAUST BIS

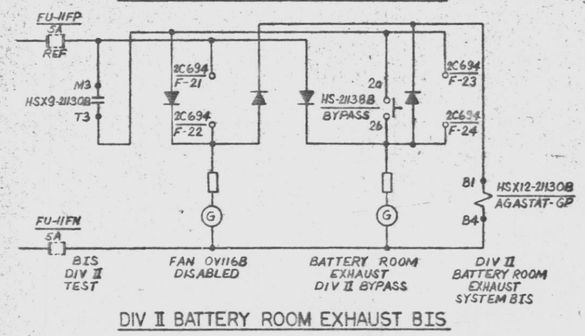

DIV II BATTERY ROOM EXHAUST BIS

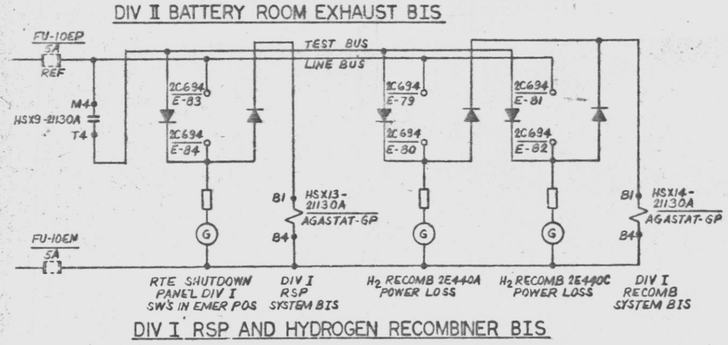

DIV I RSP AND HYDROGEN RECOMBINER BIS

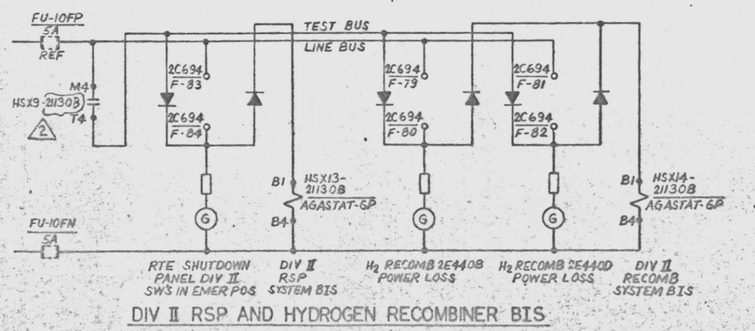

DIV II RSP AND HYDROGEN RECOMBINER BIS

SWITCH NUMBER	NAMEPLATE	CONTACT REF DWG 1a–1b	2a–2b	3a–3b	4a–4b
HS-21131A	ESW LOOP 'A' BYPASS	SP	SH.20	SP	SH.11
32A	D/G A CONTROL SW BYPASS				
33A	D/G A OUTPUT SYS BYPASS				
34A	D/G A AUX SYS BYPASS				
37A	RHR SW LOOP A BYPASS		SH.21		SP
32C	D/G C CONTROL SW BYPASS		SH.20		SH.11
33C	D/G C OUTPUT SYS BYPASS				
34C	D/G C AUX SYS BYPASS				
36A	SGT DIV I BYPASS		SH.21		
35A	CTL ROOM HABITAB SYS BYPASS				
41A	DRYWELL VENT SYS BYPASS				SP
42A	RB SWGR & LCC BYPASS				
40A	CONTN ISOL BYPASS				
38A	BATTERY ROOM EXH BYPASS		SH.19		SH.11
SPARE	SPARE		SH.21		SP
HS-21132B	D/G B CONTROL SW BYPASS	SP	SH.22	SP	SH.12
33B	D/G B OUTPUT SYS BYPASS				
34B	D/G B AUX SYS BYPASS				
37B	RHR SW LOOP B BYPASS		SH.23		SP
32D	D/G D CONTROL SW BYPASS		SH.22		SH.12
33D	D/G D OUTPUT SYS BYPASS				
34D	D/G D AUX SYS BYPASS				
36B	SGT DIV II BYPASS		SH.23		
35B	CTL ROOM HABITAB SYS BYPASS				
41B	DRYWELL VENT SYS BYPASS				SP
42B	RB SWGR & LCC BYPASS				
40B	CONTN ISOL BYPASS				
38B	BATTERY ROOM EXH BYPASS		SH.19		SH.12
31B	ESW LOOP 'B' BYPASS		SH.22		SH.12
39B	CONTN INSTR GAS BYPASS		SH.23		SP

TABLE A - GE CR2940 SWITCH
(SEE NOTE 2)

RELAY NUMBER	REFERENCE DWG 1 o–o 2	A-B-C	D-E-F	G-H-J	K-L-M
HSX3-21130A	SH.20	SH.20	SP	SP	SP
HSX4		SH.24	SH.27		
HSX16					
HSX18					
HSX3-21130B	SH.22	SH.22	SP		
HSX4		SH.24	SH.27		
HSX16					
HSX18					

POTTER & BRUMFIELD MDR 5062
(SEE NOTE 2)

RELAY NUMBER	REFERENCE DWG B1 o–o B4	M1-T1-R1	M2-T2-R2	M3-T3-R3	M4-T4-R4
HSX1-21130A	SH.20	SH.24	SH.27	SP	SP
HSX2	SH.20				SH.21
HSX5	SH.21				SP
HSX6					
HSX7					
HSX8		↓	↓	↓	↓
HSX9		SH.21	SH.21	SH.19	SH.19
HSX10		SH.24	SH.27	SP	SP
HSX11	↓				
HSX12	SH.19				
HSX13	↓				
HSX14					
HSX15	SH.20				
HSX17	SH.20				
HSX19 ↓	SH.21	↓	SH.27		
HSX1-21130B	SH.22	SH.24	SH.27		↓
HSX2	SH.22				SH.23
HSX5	SH.23				SP
HSX6					
HSX7					
HSX8		↓	↓	↓	↓
HSX9		SH.23	SH.23	SH.19	SH.19
HSX10		SH.24	SH.27	SP	SP
HSX11	↓				
HSX12	SH.19				
HSX13	↓				
HSX14					
HSX15	SH.22				
HSX17	SH.22				
HSX19 ↓	SH.23	↓	↓	↓	↓

AGASTAT GPD RELAY (SEE NOTE 2)

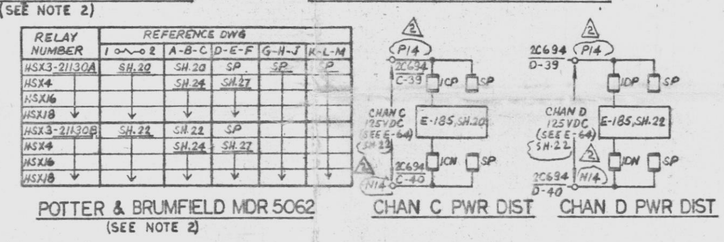

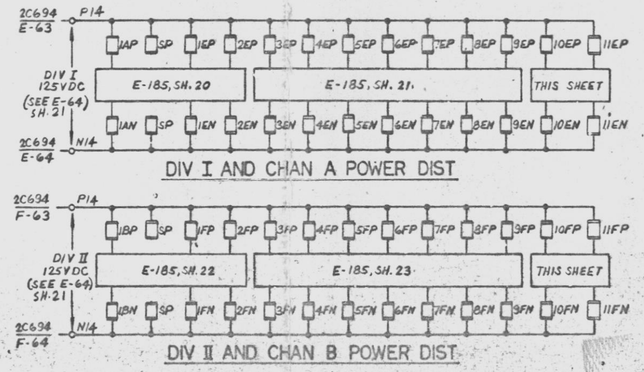

BIS TEST DIV I

2C694 F.V. TEST

BLOCK No.	CONTACT No.		POSITION TEST	DRAWING No. E-185 SH.	CONTACT BLOCK CAT. No.
1	1a–1b	1	X	A 20, B 22	KLA4
	2a–2b	2	X	B 22	
3	3a–3b	3	X	A 20, B 22	KLA4
	4a–4b	4	X	A 21, B 23	
5	5a–5b	5	X	A 21, B 23	KLA4
	6a–6b	6	X	A 21, B 23	
7	7a–7b	7	X	A 21, B 23	KLA4
	8a–8b	8	X	A 21, B 23	

CONTROL SWITCH: HS-21130A & B
CUTLER HAMMER TYPE E-30
MOMENTARY CONTACTS

G SEE TABLE A

2C694 F.V. NORMAL BYPASS

BLOCK No.	CONTACT No.		POSITION NORMAL	POSITION BYPASS	DRAWING No.
TOP	1a–1b	P	X		SEE TABLE A
	2a–2b	B		X	
BTM	3a–3b	P	X		
	4a–4b	B		X	

CONTROL SWITCH: SEE TABLE A
GENERAL ELECTRIC TYPE CR2940
MAINTAINED CONTACTS

NOTES:

1. FOR STANDARD SYMBOLS FOR ELECTRICAL DIAGRAMS REFER TO 8856-E-42.
2. SPARE CONTACTS REQUIRED TO WIRE OUT ARE INDICATED BY TERMINATION POINT IN PLACE OF CONTACT REF DWG.
3. BLOCKING DIODES TO BE TYPE IN459A OR EQUAL.
4. FOR BIS INPUTS SEE E-185, SH. 25 & 26

Doc. # 50-387
Control # 8303220117-76
Date 3/10/83 of Document:
REGULATORY DOCKET FILE

UNCONTROLLED DOCUMENT FOR REFERENCE ONLY

NO.	DATE	REVISIONS	BY	CHK	DESIGN SUPV	ENG'R	PROJ ENGR	APP'D
3	9/26/72	REV. RLY CONTACT, ADDED WIRE CODES & DWG REF (DCR 42)	WL	RB	MJ	[illegible]		
2	11/4/77	REVISED TERM NOS AS SHOWN	MJ	WB	MJ	[illegible]		
1	9/29/77	ISSUED FOR CONSTRUCTION	MJ	WB	MJ	[illegible]		

SCALE | DESIGNED A. VAUSE | DRAWN UCV

PENNSYLVANIA POWER & LIGHT COMPANY
ALLENTOWN, PENNSYLVANIA
SUSQUEHANNA STEAM ELECTRIC STATION – UNIT 1, UNIT 2

BECHTEL – SAN FRANCISCO

SCHEMATIC DIAGRAM
BYPASS INDICATION SYSTEM (BOP)
UNIT 2

JOB No.	DRAWING No.	REV.
8856	E-185 SH 19	2

D-107334 SH 19

G2P35 BYPASS INDICATION SYS BOP W

D

This drawing and the design it covers are the property of BECHTEL. They are merely loaned and on the borrower's express agreement that they will not be reproduced, copied, loaned, exhibited, nor used except in the limited way and private use permitted by any written consent given by the lender to the borrower.

PRC APERTURE CARD

24X
I certify that the microfilmed image contained on this microform was made in the normal and regular course of business. This is a true, full, correct and complete reproduction and replacement for and/or in lieu of original documents generated by the Bechtel group of companies.
Signed JACINTO Date 2-5-82 Camera Type MRG I
Camera Operator

This drawing and the design it covers are the property of BECHTEL. They are merely loaned and on the borrower's express agreement that they will not be reproduced, copied, loaned, exhibited, nor used except in the limited way and private use permitted by any written consent given by the borrower.

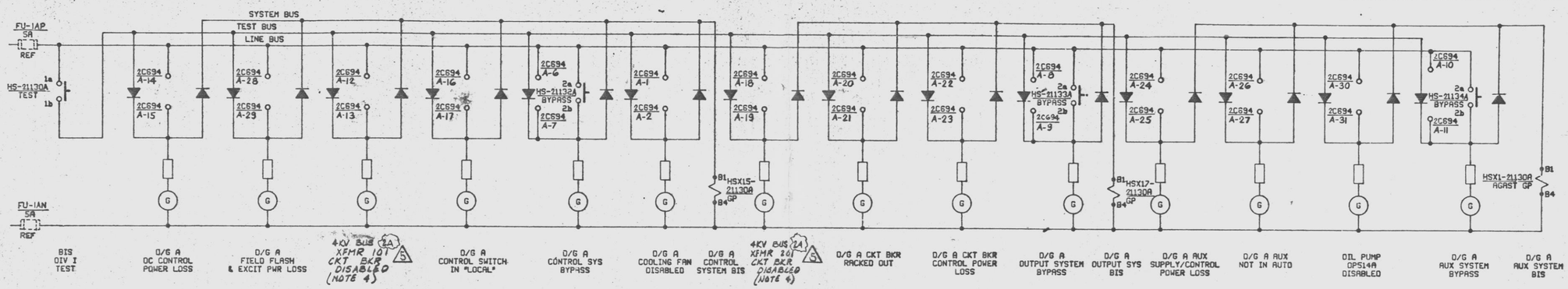

DIESEL GENERATOR A BIS

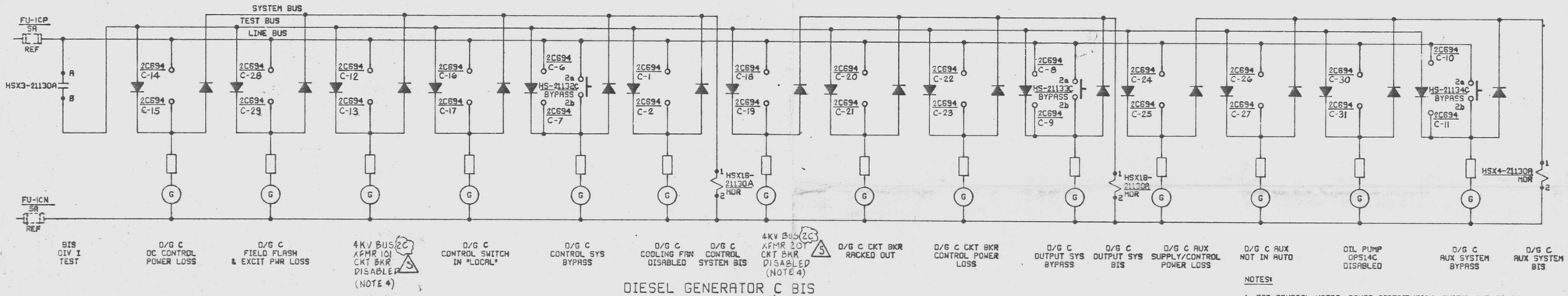

DIESEL GENERATOR C BIS

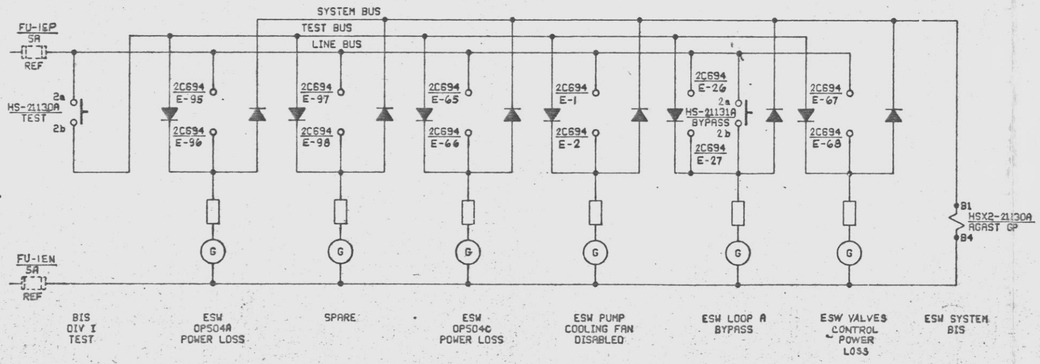

DIV I ESW BIS

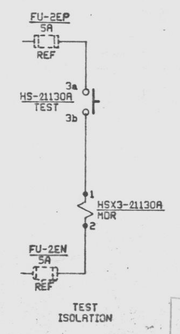

NOTES:

1. FOR GENERAL NOTES, POWER DISTRIBUTION, SWITCH AND RELAY DEVELOPMENTS SEE E-185 SHEET 19.
2. BLOCKING DIODES TO BE TYPE 1N459A OR EQUAL.
3. FOR INPUTS TO THESE DISPLAYS SEE E-185 SH 25.
4. ENGRAVING BY FIELD

Docket # 50-387
Control # 8308220117 77
Date 3/10/83 of Document:
REGULATORY DOCKET FILE

PRC APERTURE CARD

UNCONTROLLED DOCUMENT FOR REFERENCE ONLY

No.	DATE	REVISIONS	BY	CHK'D	DESIGN SUPV	ENG	PROJ ENGR	APP'D
5	11/8/84	REV PER DCR G93.	PC	RAH	HK			
4	1/14/82	REV. RLY DESCRIPTION (DCR 42)	JL	RS	JJ			
3	7/29/81	REV. PER PLB-9929 (DCR #9)	JKJ	RS	HK			
2	2/6/79	REVISED LINE BUS WIRING AS SHOWN	WB	RH	TG			
1	8/21/77	REVISED TERMINALS AS SHOWN	WW	RB	WW			
0	3/24/77	ISSUED FOR CONSTRUCTION	WW	WB	WW			

SCALE NONE | DESIGNED A. VAUSE | DRAWN

PENNSYLVANIA POWER & LIGHT COMPANY
ALLENTOWN, PENNSYLVANIA
SUSQUEHANNA STEAM ELECTRIC STATION – UNIT 1, UNIT 2

BECHTEL – SAN FRANCISCO

SCHEMATIC DIAGRAM BYPASS INDICATION SYSTEM (BOP) UNIT 2

JOB No.	DRAWING No.	REV.
8856	E-185 SH 20	5

D-107334 SH 20

G 2 P 3 5 | BYPASS INDICATION SYS BOP | W

D

24X

I certify that the microfilmed image contained on this microform were made in the normal and regular course of business. This is a true, full, correct and complete reproduction and replacement prior notice in lieu of original documents. [illegible]
JACINTO 9-6-82 Camera Type MRG I

This drawing and the design it covers are the property of BECHTEL. They are merely loaned and on the borrower's express agreement that they will not be reproduced, copied, loaned, exhibited, nor used except in the limited way and private use permitted by any written consent given by the lender to the borrower.

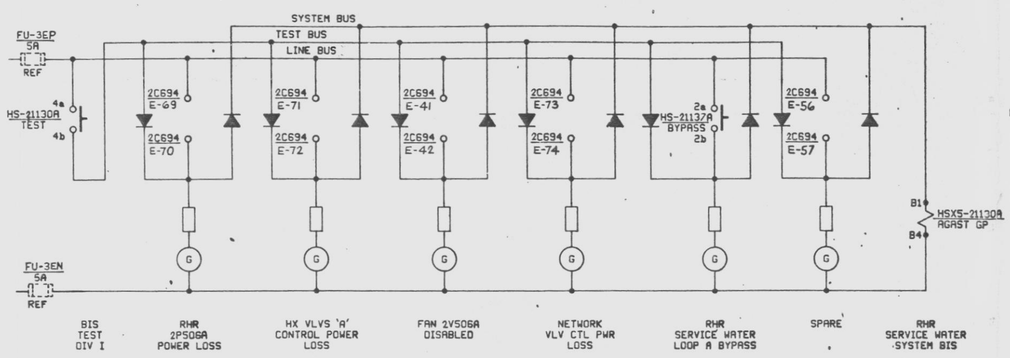

LOOP A RHR SERVICE WATER BIS

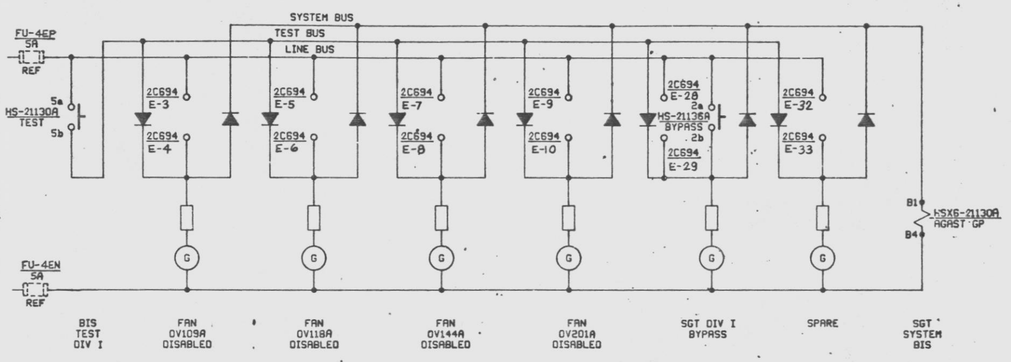

DIV I STANDBY GAS TREATMENT BIS

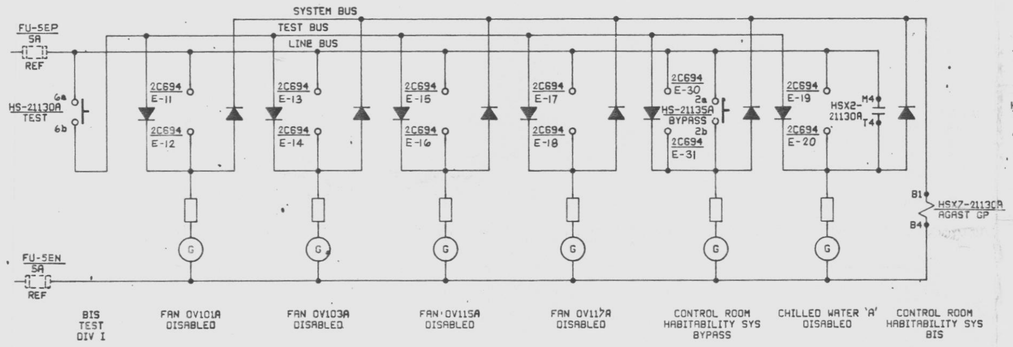

DIV I CONTROL ROOM HABITABILITY BIS

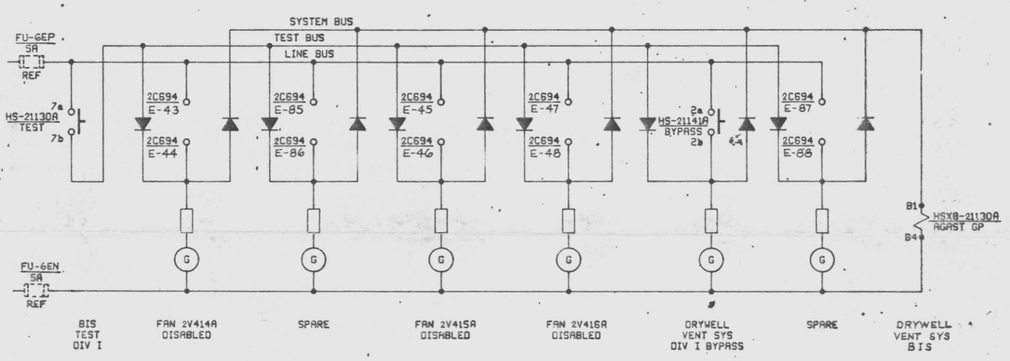

DIV I DRYWELL VENT BIS

Docket # 50-387
Control # 8303220011 7-78
Date 3/10/83 of Document:
REGULATORY DOCKET FILE

NOTES:

1. FOR GENERAL NOTES, POWER DISTRIBUTION, SWITCH AND RELAY DEVELOPMENTS SEE E-185 SHEET 19.
2. BLOCKING DIODES TO BE TYPE 1N459A OR EQUAL.
3. FOR INPUTS TO THESE DISPLAYS SEE E-185 SH 25.

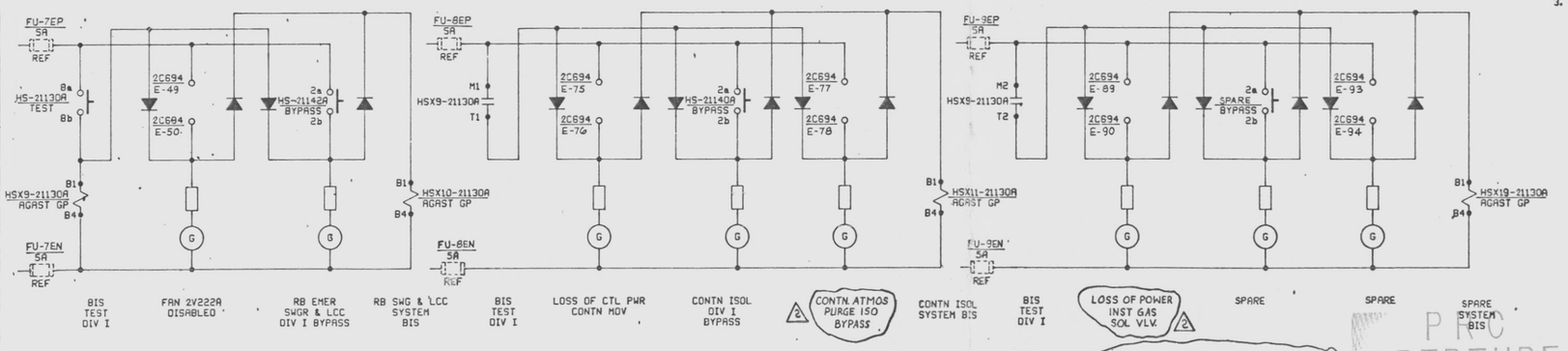

DIV I RB SWG & LCC BIS

DIV I CONTN ISOL BIS

DIV I CONTN INSTR GAS BIS

UNCONTROLLED DOCUMENT
FOR REFERENCE ONLY

PRC APERTURE CARD

2	11/28/81	REV. PER DCP 025-2.	DH	RS	MW	-	
1	9/14/77	REVISED TERM NOS AS SHOWN	JW	JLB	JW		
0	9/6/77	ISSUED FOR CONSTRUCTION	JW	JLB	JW	MW	MW
NO.	DATE	REVISIONS	BY	CHK	DESIGN SUPV	ENGR	PROJ MNGR APP'D

SCALE NONE | DESIGNED R. VAUSE | DRAWN

PENNSYLVANIA POWER & LIGHT COMPANY
ALLENTOWN, PENNSYLVANIA
SUSQUEHANNA STEAM ELECTRIC STATION – UNIT 1, UNIT 2

BECHTEL – SAN FRANCISCO

SCHEMATIC DIAGRAM BYPASS INDICATION SYSTEM (BOP) UNIT 2

JOB No.	DRAWING No.	REV.
8856	E-185 SH 21	2.

D-107334 SH 21

G2P35 BYPASS INDICATION SYS BOP W

22 x 34 "D" SIZE

7.78 D-P ARCHIVIGHT NO. 2102-W005

24X

I certify that the microfilmed image contained on this microform were made in the normal and regular course of business. This is a true, full, correct and complete reproduction and replacement for and/or in lieu of original documents generated by the Bechtel group of companies.

Signed _____ Date 11-9-81 Camera Type MRG I
Camera Operator JACINTO

This drawing and the design it covers are the property of BECHTEL. They are merely loaned and on the borrower's express agreement that they will not be reproduced, copied, loaned, exhibited, nor used except in the limited way and private use permitted by any written consent given by the lender to the borrower.

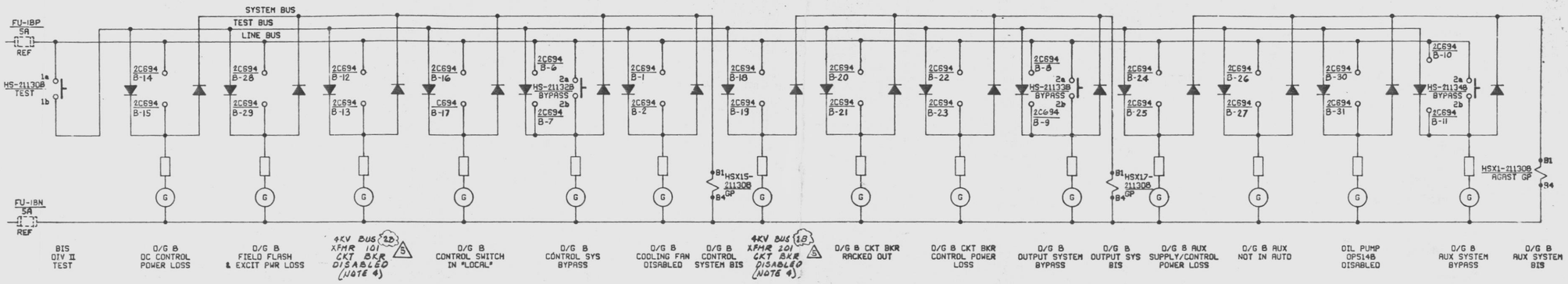

DIESEL GENERATOR B BIS

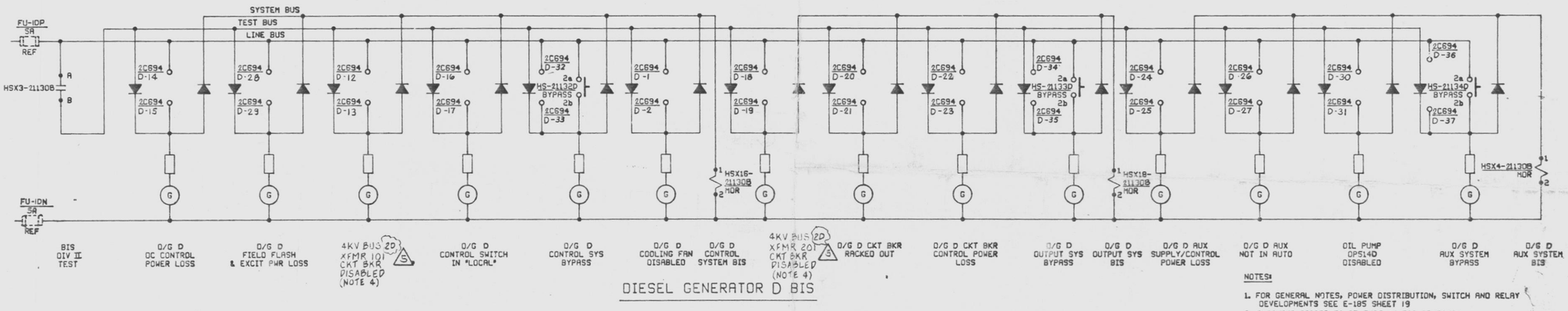

DIESEL GENERATOR D BIS

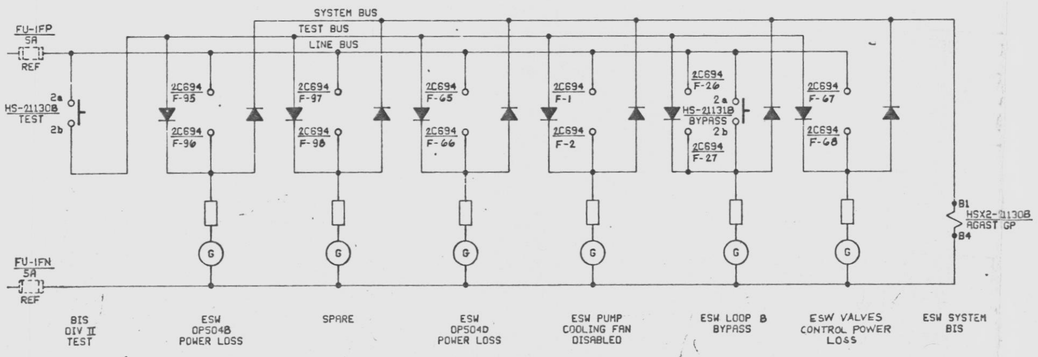

DIV II ESW BIS

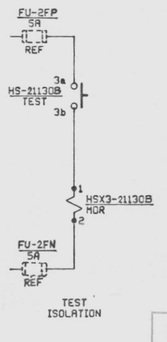

NOTES:

1. FOR GENERAL NOTES, POWER DISTRIBUTION, SWITCH AND RELAY DEVELOPMENTS SEE E-185 SHEET 19
2. BLOCKING DIODES TO BE TYPE 1N459A OR EQUAL.
3. FOR INPUTS TO THESE DISPLAYS SEE E-185 SH 25 & 26
4. ENGRAVING BY FIELD.

Docket # 50-387
Control # 8203220117-79
Date 3/10/83 of Document:
REGULATORY DOCKET FILE

PRC APERTURE CARD

UNCONTROLLED DOCUMENT FOR REFERENCE ONLY

No.	DATE	REVISIONS	BY	CHK	DESIGN SUPV	ENG PM	PROJ MGR	APP'D
6	9/11/84	REV PER DCR 693	PC					
5	5/7/82	INCORP FCR E-8725	DL					
4	12/4/80	REV. PER PLB-9929 (DCR #9)	WJ					
3	2/4/79	REVISED LINE BUS WIRING AS SHOWN	LSB					
2	1/1/79	REVISED TERMINOS AS SHOWN	W					
1	8/14/77	ISSUED FOR CONSTRUCTION	W					

SCALE NONE | DESIGNED R. VAUSE | DRAWN

PENNSYLVANIA POWER & LIGHT COMPANY

ALLENTOWN, PENNSYLVANIA

SUSQUEHANNA STEAM ELECTRIC STATION – UNIT 1, UNIT 2

BECHTEL – SAN FRANCISCO

SCHEMATIC DIAGRAM BYPASS INDICATION SYSTEM (BOP) UNIT 2

JOB No.	DRAWING No.	REV.
8856	E-185 SH 22	5

D-107334 SH 22

G2P35 BYPASS INDICATION SYS BOP W

22 x 34 "D" SIZE

24X

I certify that the microfilmed image contained on this microform were made in the normal and regular course of business. This is a true, full, correct and complete reproduction and replacement for and/or in lieu of original documents generated by the Bechtel Companies.
Signed JACINTO Camera Operator Date 6-20-82 Camera Type MRD I

D

This drawing and the design it covers are the property of BECHTEL. They are merely loaned and on the borrower's express agreement that they will not be reproduced, copied, loaned, exhibited, nor used except in the limited way and private use permitted by any written consent given by the lender to the borrower.

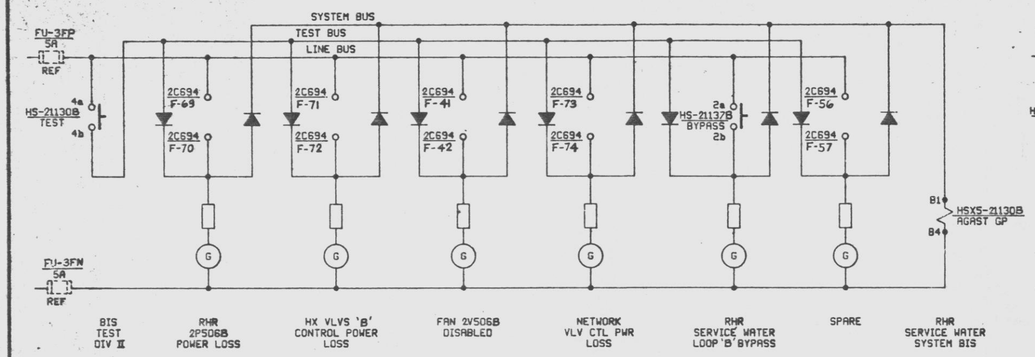

LOOP B RHR SERVICE WATER BIS

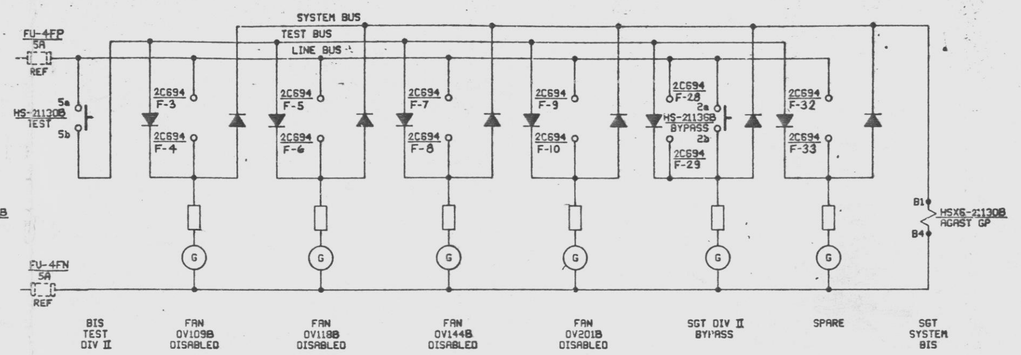

DIV II STANDBY GAS TREATMENT BIS

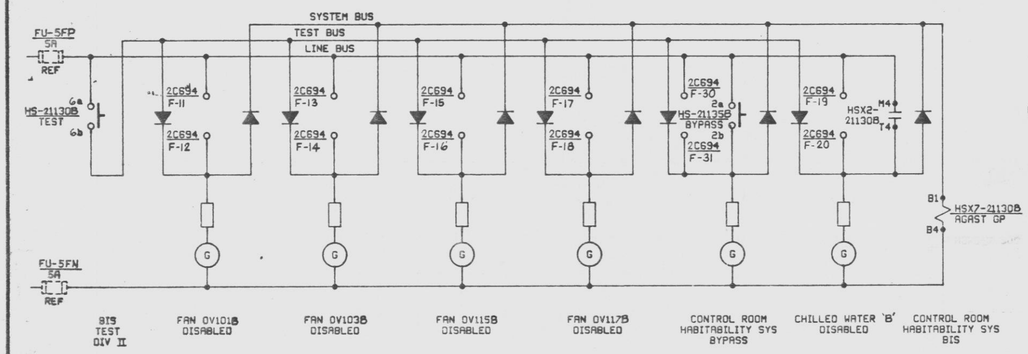

DIV II CONTROL ROOM HABITABILITY BIS

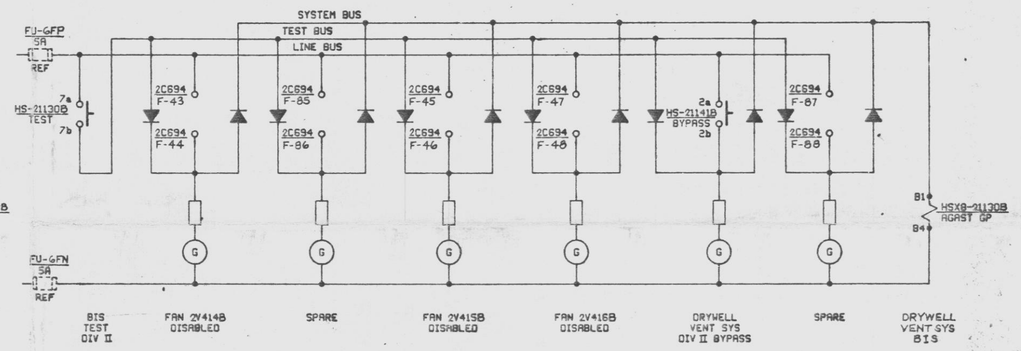

DIV II DRYWELL VENT BIS

Doc # 50-387
Control # 8305220117 80
Date 5/10/83 of Document:
REGULATORY DOCKET FILE

NOTES:

1. FOR GENERAL NOTES, POWER DISTRIBUTION, SWITCH AND RELAY DEVELOPMENTS SEE E-185 SHEET 19.
2. BLOCKING DIODES TO BE TYPE 1N459A OR EQUAL.
3. FOR INPUTS TO THESE DISPLAYS SEE E-185 SH 26.

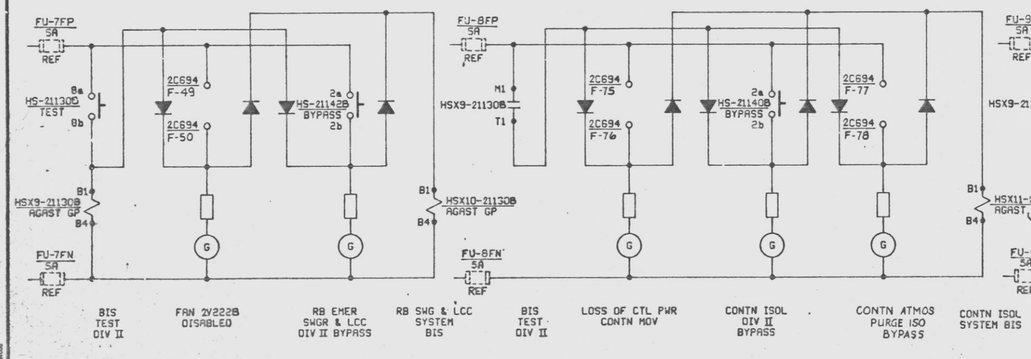

DIV II RB SWG & LCC BIS

DIV II CONTN ISOL BIS

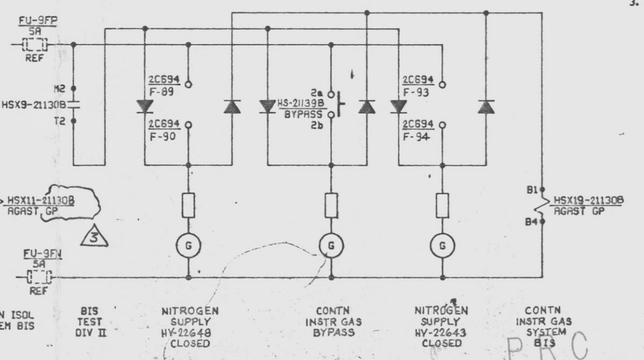

DIV II CONTN INSTR GAS BIS

4	4/20/84	REV. RLY DESCRIPTION (DCR 42)	LL	RS	LL			
3	11/7/83	REV. PER DCP 025.2.	DG	RS	DG			
2	4/7/77	REVISED TERM NOS & REF SHEET NO AS SHOWN	JW	WB	JW			
1	7/24/77	ISSUED FOR CONSTRUCTION	JW	WB	JW			
No.	DATE	REVISIONS	BY	CH'K.	DESIGN SUPV.	ENG'R	PROJ ENG'R	APP'D

SCALE NONE | DESIGNED R. VRUSE | DRAWN

PENNSYLVANIA POWER & LIGHT COMPANY
ALLENTOWN, PENNSYLVANIA
SUSQUEHANNA STEAM ELECTRIC STATION – UNIT 1, UNIT 2

BECHTEL – SAN FRANCISCO

SCHEMATIC DIAGRAM BYPASS INDICATION SYSTEM (BOP) UNIT 2

JOB No.	DRAWING No.	REV.
8856	E-185 SH 23	3

D-107334 SH 23

G2P35 BYPASS INDICATION SYS BOP W

UNCONTROLLED DOCUMENT
FOR REFERENCE ONLY

PRC APERTURE CARD

24X

I certify that the microfilmed image contained on this microform were made in the normal and regular course of business. This is a true, full, correct and complete reproduction and replacement for and/or in lieu of original documents generated by the Bechtel group of companies.
Signed JACINTO Date 1-23-85 Camera Type MRC I
Camera Operator

This drawing and the design it covers are the property of BECHTEL. They are merely loaned and on the borrower's express agreement that they will not be reproduced, copied, loaned, exhibited, nor used except in the limited way and private use permitted by any written consent given by the lender to the borrower.

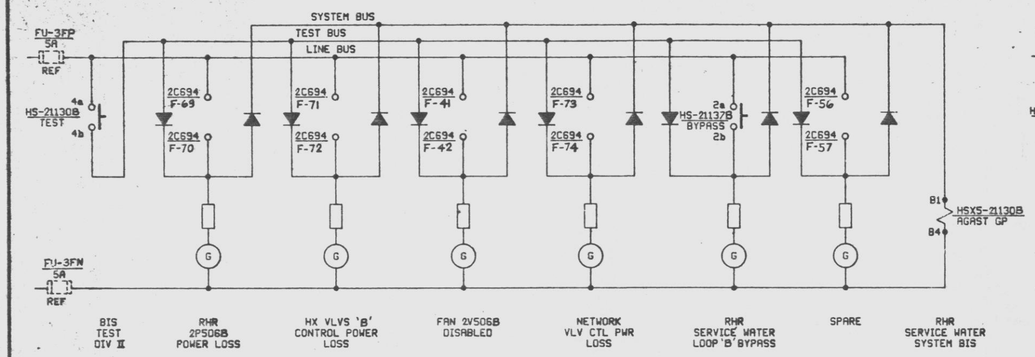

LOOP B RHR SERVICE WATER BIS

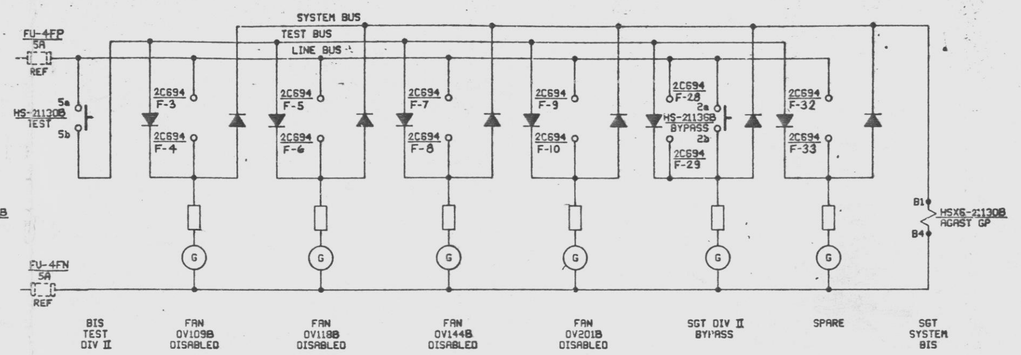

DIV II STANDBY GAS TREATMENT BIS

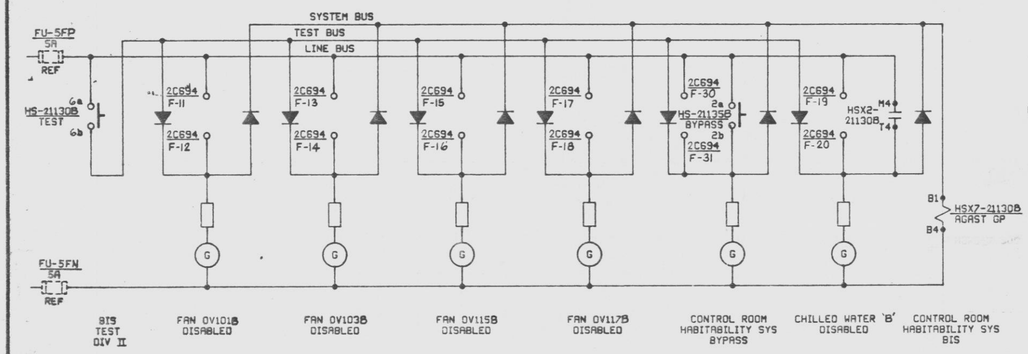

DIV II CONTROL ROOM HABITABILITY BIS

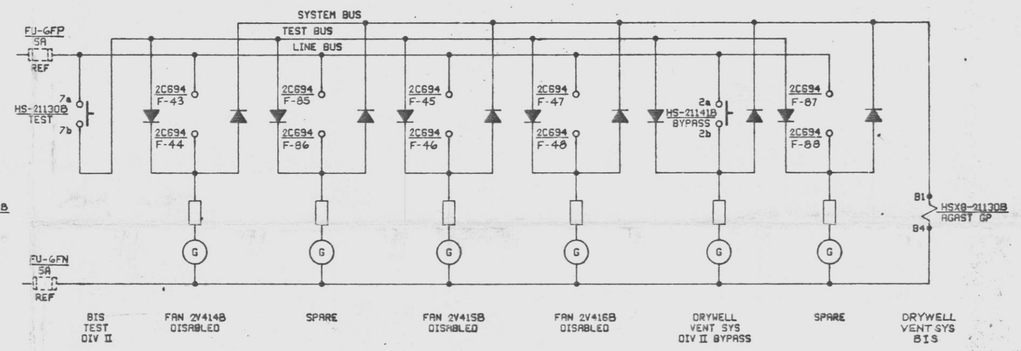

DIV II DRYWELL VENT BIS

Doc # 50-387
Control # 8305220117 80
Date 5/10/83 of Document:
REGULATORY DOCKET FILE

NOTES:

1. FOR GENERAL NOTES, POWER DISTRIBUTION, SWITCH AND RELAY DEVELOPMENTS SEE E-185 SHEET 19.
2. BLOCKING DIODES TO BE TYPE 1N459A OR EQUAL.
3. FOR INPUTS TO THESE DISPLAYS SEE E-185 SH 26.

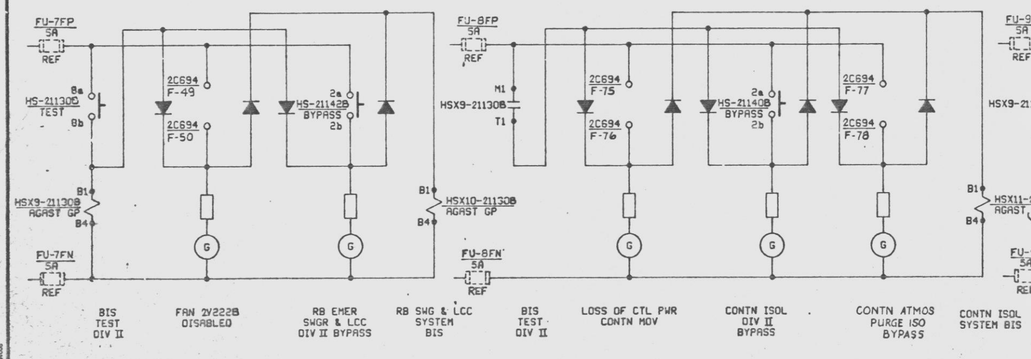

DIV II RB SWG & LCC BIS

DIV II CONTN ISOL BIS

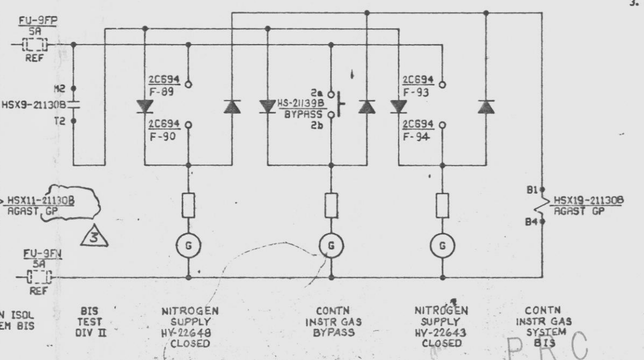

DIV II CONTN INSTR GAS BIS

4	4/20/84	REV. RLY DESCRIPTION (DCR 42)	LL	RS	LL			
3	11/7/83	REV. PER DCP 025.2.	DG	RS	DG			
2	4/7/77	REVISED TERM NOS & REF SHEET NO AS SHOWN	JW	WB	JW			
1	7/24/77	ISSUED FOR CONSTRUCTION	JW	WB	JW			
No.	DATE	REVISIONS	BY	CH'K.	DESIGN SUPV.	ENG'R	PROJ ENG'R	APP'D

SCALE NONE | DESIGNED R. VRUSE | DRAWN

PENNSYLVANIA POWER & LIGHT COMPANY
ALLENTOWN, PENNSYLVANIA
SUSQUEHANNA STEAM ELECTRIC STATION – UNIT 1, UNIT 2

BECHTEL – SAN FRANCISCO

SCHEMATIC DIAGRAM BYPASS INDICATION SYSTEM (BOP) UNIT 2

JOB No.	DRAWING No.	REV.
8856	E-185 SH 23	3

D-107334 SH 23

G2P35 BYPASS INDICATION SYS BOP W

UNCONTROLLED DOCUMENT
FOR REFERENCE ONLY

PRC APERTURE CARD

24X

I certify that the microfilmed image contained on this microform were made in the normal and regular course of business. This is a true, full, correct and complete reproduction and replacement for and/or in lieu of original documents generated by the Bechtel group of companies.
Signed JACINTO Date 1-23-85 Camera Type MRC I
Camera Operator

This drawing and the design it covers are the property of BECHTEL. They are merely loaned and on the borrower's express agreement that they will not be reproduced, copied, loaned, exhibited, nor used except in the limited way and for the limited purpose permitted by any written consent given by the lender to the borrower.

OC697 F.V.

RHR SW SYS COMMON DIV I

OPERATE | TEST

SWITCH DEVELOPMENT

BLOCK No.	CONTACT No.		POSITION OPERATE	POSITION TEST	DRAWING No.	REMARKS
TOP	1a 1b	F	X			SPARE
	2a 2b	B		X	E-150 SH 32	HV-01222A
BTM	3a 3b	F	X			SPARE
	4a 4b	B		X	E-150 SH 33	HV-01224A1
TOP	5a 5b	F	X			SPARE
	6a 6b	B		X	E-150 SH 33	HV-01224A2
BTM	7a 7b	F	X			SPARE #
	8a 8b	B		X		SPARE

CONTROL SWITCH : HS-01222A1
GENERAL ELECTRIC TYPE CR2940
MAINTAINED CONTACTS

2

MOTOR OVERLOAD BYPASS
RHR SW SYSTEM - COMMON [I]

OC697 F.V.

RHR SW SYS COMMON DIV II

OPERATE | TEST

SWITCH DEVELOPMENT

BLOCK No.	CONTACT No.		POSITION OPERATE	POSITION TEST	DRAWING No.	REMARKS
TOP	1a 1b	F	X			SPARE #
	2a 2b	B		X	E-150, SH. 4	HV-01222B
BTM	3a 3b	F	X			SPARE
	4a 4b	B		X	E-150, SH. 8	HV-01224B1
TOP	5a 5b	F	X			SPARE
	6a 6b	B		X	E-150, SH. 8	HV-01224B2
BTM	7a 7b	F	X			SPARE #
	8a 8b	B		X		SPARE

CONTROL SWITCH : HS-01222B1
GENERAL ELECTRIC TYPE CR2940
MAINTAINED CONTACTS

2

MOTOR OVERLOAD BYPASS
RHR SW SYSTEM - COMMON [II]

OC697 F.V.

ESW SYS LOOP A COMMON CHAN A

OPERATE | TEST

SWITCH DEVELOPMENT

BLOCK No.	CONTACT No.		POSITION OPERATE	POSITION TEST	DRAWING No.	REMARKS
TOP	1a 1b	F	X		E-146 SH. 3	HV-01112A
	2a 2b	B		X		SPARE #
BTM	3a 3b	F	X		E-146 SH. 3	HV-01122A
	4a 4b	B		X		SPARE
TOP	5a 5b	F	X			SPARE #
	6a 6b	B		X		SPARE
BTM	7a 7b	F	X			SPARE #
	8a 8b	B		X		SPARE

CONTROL SWITCH : HS-01112A1
GENERAL ELECTRIC TYPE CR2940
MAINTAINED CONTACTS

MOTOR OVERLOAD BYPASS
ESW SYS LOOP A - COMMON [A]

OC697 F.V.

ESW SYS LOOP A COMMON CHAN B

OPERATE | TEST

SWITCH DEVELOPMENT

BLOCK No.	CONTACT No.		POSITION OPERATE	POSITION TEST	DRAWING No.	REMARKS
TOP	1a 1b	F	X		E-146 SH. 3	HV-01112B
	2a 2b	B		X		SPARE #
BTM	3a 3b	F	X		E-146 SH. 3	HV-01122B
	4a 4b	B		X		SPARE
TOP	5a 5b	F	X			SPARE #
	6a 6b	B		X		SPARE
BTM	7a 7b	F	X			SPARE #
	8a 8b	B		X		SPARE

CONTROL SWITCH : HS-01112B1
GENERAL ELECTRIC TYPE CR2940
MAINTAINED CONTACTS

MOTOR OVERLOAD BYPASS
ESW SYS LOOP A - COMMON [B]

OC697 F.V.

ESW SYS LOOP A COMMON CHAN C

OPERATE | TEST

SWITCH DEVELOPMENT

BLOCK No.	CONTACT No.		POSITION OPERATE	POSITION TEST	DRAWING No.	REMARKS
TOP	1a 1b	F	X		E-146 SH. 3	HV-01112C
	2a 2b	B		X		SPARE #
BTM	3a 3b	F	X		E-146 SH. 3	HV-01122C
	4a 4b	B		X		SPARE
TOP	5a 5b	F	X			SPARE #
	6a 6b	B		X		SPARE
BTM	7a 7b	F	X			SPARE #
	8a 8b	B		X		SPARE

CONTROL SWITCH : HS-01112C1
GENERAL ELECTRIC TYPE CR2940
MAINTAINED CONTACTS

MOTOR OVERLOAD BYPASS
ESW SYS LOOP A - COMMON [C]

OC697 F.V.

ESW SYS LOOP A COMMON CHAN D

OPERATE | TEST

SWITCH DEVELOPMENT

BLOCK No.	CONTACT No.		POSITION OPERATE	POSITION TEST	DRAWING No.	REMARKS
TOP	1a 1b	F	X		E-146 SH. 3	HV-01112D
	2a 2b	B		X		SPARE #
BTM	3a 3b	F	X		E-146 SH. 3	HV-01122D
	4a 4b	B		X		SPARE
TOP	5a 5b	F	X			SPARE #
	6a 6b	B		X		SPARE
BTM	7a 7b	F	X			SPARE #
	8a 8b	B		X		SPARE

CONTROL SWITCH : HS-01112D1
GENERAL ELECTRIC TYPE CR2940
MAINTAINED CONTACTS

MOTOR OVERLOAD BYPASS
ESW SYS LOOP A - COMMON [D]

NOTES:

1. FOR STANDARD SYMBOLS FOR ELECTRICAL DIAGRAM SEE DWG 8856-E 42.
2. # INDICATES SPARE CONTACTS TO BE WIRED OUT TO TERMINAL BLOCK

PRC APERTURE CARD

Docket # 50-387
Control # 8303220117-86
Date 3/10/83 of Document:
REGULATORY DOCKET FILE

REFERENCE DWG'S.	
BECHTEL NO.	PL NO.
E-42	A-107191
E-146	D-107235
E-150	D-107239

NO.	DATE	REVISIONS	BY	CHK	DESIGN SUPV	ENG	PROJ ENGR	APP'D
3	7/1/11	INCORPORATED IDCN #2-DCP #396 11 REV 1 & IDCN #1-DCP # 396.12 REV 1						
2	5/6/78	REVISED NOTE 2 & AS SHOWN	MPS					
1	9/4/77	ISSUED FOR CONSTRUCTION	MPS					

SCALE — | DESIGNED J. WONG | DRAWN MPSANTOS

PENNSYLVANIA POWER & LIGHT COMPANY
ALLENTOWN, PENNSYLVANIA
SUSQUEHANNA STEAM ELECTRIC STATION — UNIT 1, UNIT 2

BECHTEL - SAN FRANCISCO

SCHEMATIC DIAGRAM
MOTOR OVERLOAD BYPASS SYSTEM
COMMON

JOB No.	DRAWING No.	REV.
8856	E-185 SH 29	2

D-107334 SH 29

UNCONTROLLED DOCUMENT
FOR REFERENCE ONLY

G½P35 SCHEM MTR OVERLOAD BYPSS SY W

7/78 O/P ADVANCE NO. 3150-W05

22 x 34 "D" SIZE

24X

I certify that the microfilmed image contained on this microform was made in the normal and regular course of business. This is a true, full, correct and complete reproduction and representation for and/or in lieu of original documents presented by the Bechtel group of companies.

Jacinto
Camera Operator

Date 7-6-84

Camera Type MRG 1

D

This drawing and the design it covers are the property of BECHTEL. They are merely loaned and on the borrower's express agreement that they will not be reproduced, copied, loaned, exhibited, nor used except in the limited way and for the limited purpose permitted by any written consent given by the lender to the borrower.

OC697 F.V.

RHR SW SYS COMMON DIV I

OPERATE | TEST

SWITCH DEVELOPMENT

BLOCK No.	CONTACT No.		POSITION OPERATE	POSITION TEST	DRAWING No.	REMARKS
TOP	1a 1b	F	X			SPARE
	2a 2b	B		X	E-150 SH 32	HV-01222A
BTM	3a 3b	F	X			SPARE
	4a 4b	B		X	E-150 SH 33	HV-01224A1
TOP	5a 5b	F	X			SPARE
	6a 6b	B		X	E-150 SH 33	HV-01224A2
BTM	7a 7b	F	X			SPARE #
	8a 8b	B		X		SPARE

CONTROL SWITCH : HS-01222A1
GENERAL ELECTRIC TYPE CR2940
MAINTAINED CONTACTS

2

MOTOR OVERLOAD BYPASS
RHR SW SYSTEM - COMMON [I]

OC697 F.V.

RHR SW SYS COMMON DIV II

OPERATE | TEST

SWITCH DEVELOPMENT

BLOCK No.	CONTACT No.		POSITION OPERATE	POSITION TEST	DRAWING No.	REMARKS
TOP	1a 1b	F	X			SPARE #
	2a 2b	B		X	E-150, SH. 4	HV-01222B
BTM	3a 3b	F	X			SPARE
	4a 4b	B		X	E-150, SH. 8	HV-01224B1
TOP	5a 5b	F	X			SPARE
	6a 6b	B		X	E-150, SH. 8	HV-01224B2
BTM	7a 7b	F	X			SPARE #
	8a 8b	B		X		SPARE

CONTROL SWITCH : HS-01222B1
GENERAL ELECTRIC TYPE CR2940
MAINTAINED CONTACTS

2

MOTOR OVERLOAD BYPASS
RHR SW SYSTEM - COMMON [II]

OC697 F.V.

ESW SYS LOOP A COMMON CHAN A

OPERATE | TEST

SWITCH DEVELOPMENT

BLOCK No.	CONTACT No.		POSITION OPERATE	POSITION TEST	DRAWING No.	REMARKS
TOP	1a 1b	F	X		E-146 SH. 3	HV-01112A
	2a 2b	B		X		SPARE #
BTM	3a 3b	F	X		E-146 SH. 3	HV-01122A
	4a 4b	B		X		SPARE
TOP	5a 5b	F	X			SPARE #
	6a 6b	B		X		SPARE
BTM	7a 7b	F	X			SPARE #
	8a 8b	B		X		SPARE

CONTROL SWITCH : HS-01112A1
GENERAL ELECTRIC TYPE CR2940
MAINTAINED CONTACTS

MOTOR OVERLOAD BYPASS
ESW SYS LOOP A - COMMON [A]

OC697 F.V.

ESW SYS LOOP A COMMON CHAN B

OPERATE | TEST

SWITCH DEVELOPMENT

BLOCK No.	CONTACT No.		POSITION OPERATE	POSITION TEST	DRAWING No.	REMARKS
TOP	1a 1b	F	X		E-146 SH. 3	HV-01112B
	2a 2b	B		X		SPARE #
BTM	3a 3b	F	X		E-146 SH. 3	HV-01122B
	4a 4b	B		X		SPARE
TOP	5a 5b	F	X			SPARE #
	6a 6b	B		X		SPARE
BTM	7a 7b	F	X			SPARE #
	8a 8b	B		X		SPARE

CONTROL SWITCH : HS-01112B1
GENERAL ELECTRIC TYPE CR2940
MAINTAINED CONTACTS

MOTOR OVERLOAD BYPASS
ESW SYS LOOP A - COMMON [B]

OC697 F.V.

ESW SYS LOOP A COMMON CHAN C

OPERATE | TEST

SWITCH DEVELOPMENT

BLOCK No.	CONTACT No.		POSITION OPERATE	POSITION TEST	DRAWING No.	REMARKS
TOP	1a 1b	F	X		E-146 SH. 3	HV-01112C
	2a 2b	B		X		SPARE #
BTM	3a 3b	F	X		E-146 SH. 3	HV-01122C
	4a 4b	B		X		SPARE
TOP	5a 5b	F	X			SPARE #
	6a 6b	B		X		SPARE
BTM	7a 7b	F	X			SPARE #
	8a 8b	B		X		SPARE

CONTROL SWITCH : HS-01112C1
GENERAL ELECTRIC TYPE CR2940
MAINTAINED CONTACTS

MOTOR OVERLOAD BYPASS
ESW SYS LOOP A - COMMON [C]

OC697 F.V.

ESW SYS LOOP A COMMON CHAN D

OPERATE | TEST

SWITCH DEVELOPMENT

BLOCK No.	CONTACT No.		POSITION OPERATE	POSITION TEST	DRAWING No.	REMARKS
TOP	1a 1b	F	X		E-146 SH. 3	HV-01112D
	2a 2b	B		X		SPARE #
BTM	3a 3b	F	X		E-146 SH. 3	HV-01122D
	4a 4b	B		X		SPARE
TOP	5a 5b	F	X			SPARE #
	6a 6b	B		X		SPARE
BTM	7a 7b	F	X			SPARE #
	8a 8b	B		X		SPARE

CONTROL SWITCH : HS-01112D1
GENERAL ELECTRIC TYPE CR2940
MAINTAINED CONTACTS

MOTOR OVERLOAD BYPASS
ESW SYS LOOP A - COMMON [D]

NOTES:

1. FOR STANDARD SYMBOLS FOR ELECTRICAL DIAGRAM SEE DWG 8856-E 42.
2. # INDICATES SPARE CONTACTS TO BE WIRED OUT TO TERMINAL BLOCK

PRC APERTURE CARD

Docket # 50-387
Control # 8303220117-86
Date 3/10/83 of Document:
REGULATORY DOCKET FILE

REFERENCE DWG'S.	
BECHTEL NO.	PL NO.
E-42	A-107191
E-146	D-107235
E-150	D-107239

NO.	DATE	REVISIONS	BY	CHK	DESIGN SUPV	ENG	PROJ ENGR	APP'D
3	7/1/11	INCORPORATED IDCN #2-DCP #396 11 REV 1 & IDCN #1-DCP # 396.12 REV 1						
2	5/6/78	REVISED NOTE 2 & AS SHOWN	MPS					
1	9/4/77	ISSUED FOR CONSTRUCTION	MPS					

SCALE — | DESIGNED J. WONG | DRAWN MPSANTOS

PENNSYLVANIA POWER & LIGHT COMPANY
ALLENTOWN, PENNSYLVANIA
SUSQUEHANNA STEAM ELECTRIC STATION — UNIT 1, UNIT 2

BECHTEL - SAN FRANCISCO

SCHEMATIC DIAGRAM
MOTOR OVERLOAD BYPASS SYSTEM
COMMON

JOB No.	DRAWING No.	REV.
8856	E-185 SH 29	2

D-107334 SH 29

UNCONTROLLED DOCUMENT
FOR REFERENCE ONLY

G½P35 SCHEM MTR OVERLOAD BYPSS SY W

7/78 O/P ADVANCE NO. 3150-W05

22 x 34 "D" SIZE

24X

I certify that the microfilmed image contained on this microform was made in the normal and regular course of business. This is a true, full, correct and complete reproduction and representation for and/or in lieu of original documents presented by the Bechtel group of companies.

Jacinto
Camera Operator

Date 7-6-84

Camera Type MRG 1

D

This drawing and the design it covers are the property of BECHTEL. They are merely loaned and on the borrower's express agreement that they will not be reproduced, copied, loaned, exhibited, nor used except in the limited way and private use permitted by any written consent given by the lender to the borrower.

7176 D/P ANNOWRIGHT NO. 3100-9005

OC697 F.V.

RHR SW. SYS. UNIT 1 DIV 1

OPERATE | TEST

SWITCH DEVELOPMENT

BLOCK No.	CONTACT No.		POSITION OPERATE	POSITION TEST	DRAWING No.	REMARK
TOP	1a 1b	F	X		E-150 SH.10	HV-11210A
	2a 2b	B		X		SPARE #
BTM	3a 3b	F	X		E-150 SH.9	HV-11215A
	4a 4b	B		X		SPARE
TOP	5a 5b	F	X			SPARE #
	6a 6b	B		X		SPARE
BTM	7a 7b	F	X			SPARE #
	8a 8b	B		X		SPARE

CONTROL SWITCH: HS-11210A1
GENERAL ELECTRIC TYPE CR2940
MAINTAINED CONTACTS

MOTOR OVERLOAD BYPASS
RHR SW SYSTEM UNIT 1 [I]

OC697 F.V.

RHR SW SYS UNIT 1 DIV II

OPERATE | TEST

SWITCH DEVELOPMENT

BLOCK No.	CONTACT No.		POSITION OPERATE	POSITION TEST	DRAWING No.	REMARK
TOP	1a 1b	F	X		E-150 SH.11	HV-11210B
	2a 2b	B		X		SPARE #
BTM	3a 3b	F	X		E-150 SH.12	HV-11215B
	4a 4b	B		X		SPARE
TOP	5a 5b	F	X			SPARE #
	6a 6b	B		X		SPARE
BTM	7a 7b	F	X			SPARE #
	8a 8b	B		X		SPARE

CONTROL SWITCH: HS-11210B3
GENERAL ELECTRIC TYPE CR2940
MAINTAINED CONTACTS

MOTOR OVERLOAD BYPASS
RHR SW SYSTEM UNIT 1 [II]

OC697 F.V.

CONT ISO SYS UNIT 1 DIV 1

OPERATE | TEST

SWITCH DEVELOPMENT

BLOCK No.	CONTACT No.		POSITION OPERATE	POSITION TEST	DRAWING No.	REMARK
TOP	1a 1b	F	X		E-171 SH.5	HV-15766
	2a 2b	B		X		SPARE #
BTM	3a 3b	F	X		E-172 SH.2	HV-12603
	4a 4b	B		X		SPARE
TOP	5a 5b	F	X		E-147 SH.4	HV-11313
	6a 6b	B		X		SPARE
BTM	7a 7b	F	X		E-147 SH.3	HV-11314
	8a 8b	B		X		SPARE

CONTROL SWITCH: H3HS766A
GENERAL ELECTRIC TYPE CR2940
MAINTAINED CONTACTS

MOTOR OVERLOAD BYPASS
CONTAINMENT ISO SYS UNIT 1 [I]

OC697 F.V.

RHR ISO SYS UNIT 1 DIV II

OPERATE | TEST

SWITCH DEVELOPMENT

BLOCK No.	CONTACT No.		POSITION OPERATE	POSITION TEST	DRAWING No.	REMARK
TOP	1a 1b	F	X		E-171 SH.6	HV-15768
	2a 2b	B		X		SPARE #
BTM	3a 3b	F	X		E-147 SH.5	HV-11345
	4a 4b	B		X		SPARE
TOP	5a 5b	F	X		E-147 SH.14	HV-11346
	6a 6b	B		X		SPARE
BTM	7a 7b	F	X			SPARE #
	8a 8b	B		X		SPARE

CONTROL SWITCH: H3-15768A
GENERAL ELECTRIC TYPE CR2940
MAINTAINED CONTACTS

MOTOR OVERLOAD BYPASS
CONTAINMENT ISO SYS UNIT 1 [II]

NOTES:
1. FOR STANDARD SYMBOLS FOR ELECTRICAL DIAGRAM, SEE DWG. 8856-E-42.
2. # INDICATES SPARE CONTACTS TO BE WIRED OUT TO TERMINAL BLOCK.

PRC APERTURE CARD

Docket # 50-387
Control # 8303220117-87
Date 3/10/83 of Document:
REGULATORY DOCKET FILE

D

REFERENCE DWG'S.	
BECHTEL NO.	PL. NO.
E-42	A-107191
E-147	D-107296
E-150	D-107299
E-171	D-107320
E-172	D-107321

NO.	DATE	REVISIONS	BY	CHK	DESIGN SUPV	ENG	PROJ ENGR	APP'D
3	2/10/14	REVISED - HS-15768A TH NO REFERENCED (U.R.R.)	VLT	[illegible]	MS [illegible]	[illegible]	[illegible]	[illegible]
2	6/6/13	REVISED NOTE 2 & AS SHOWN	TPS	[illegible]	[illegible]	[illegible]	[illegible]	[illegible]
1	12/1/17	ISSUED FOR CONSTRUCTION	M.Y.	DN	[illegible]	[illegible]	[illegible]	[illegible]

SCALE NONE | DESIGNED J. WONG | DRAWN M.YOUNG

PENNSYLVANIA POWER & LIGHT COMPANY
ALLENTOWN, PENNSYLVANIA
SUSQUEHANNA STEAM ELECTRIC STATION – UNIT 1, UNIT 2

BECHTEL – SAN FRANCISCO

SCHEMATIC DIAGRAM
MOTOR OVERLOAD BYPASS SYSTEM
UNIT 1

JOB No.	DRAWING No.	REV.
8856	E-185 SH. 31	2

D-107334 SH.31

UNCONTROLLED DOCUMENT
FOR REFERENCE ONLY

GIP35 SCHEM MTR OVERLOAD BYPS SY W

22 x 34 "D" SIZE

24X

I certify that the microfilmed image contained on this microform were made in the normal and regular course of business. This is a true, full, correct and complete reproduction and representation for and/or in lieu of original documents owned by the Bechtel group of companies.
Signature DANNY Date 8-10-81 Camera Type
Camera Operator

This drawing and the design it covers are the property of BECHTEL. They are merely loaned and on the borrower's express agreement that they will not be reproduced, copied, loaned, exhibited, nor used except in the limited way and private use permitted by any written consent given by the lender to the borrower.

RHR SW. SYS. UNIT 2 DIV. I

OPERATE | TEST

OC697 F.V.

SWITCH DEVELOPMENT

BLOCK No.	CONTACT No.		POSITION OPERATE	POSITION TEST	DRAWING No.	REMARKS
TOP	1a 1b	F	X		E-150 SH.23	HV-21210A
	2a 2b	B		X		SPARE *
BTM	3a 3b	F	X		E-150 SH.22	HV-21215A
	4a 4b	B		X		SPARE
TOP	5a 5b	F	X			SPARE *
	6a 6b	B		X		SPARE
BTM	7a 7b	F	X			SPARE *
	8a 8b	B		X		SPARE

CONTROL SWITCH: HS-21210AB
GENERAL ELECTRIC TYPE CR2940
MAINTAINED CONTACTS

MOTOR OVERLOAD BYPASS
RHR SW SYSTEM UNIT 2 I

RHR SW. SYS. UNIT 2 DIV. II

OPERATE | TEST

OC697 F.V.

SWITCH DEVELOPMENT

BLOCK No.	CONTACT No.		POSITION OPERATE	POSITION TEST	DRAWING No.	REMARKS
TOP	1a 1b	F	X		E-150 SH.24	HV-21210B
	2a 2b	B		X		SPARE *
BTM	3a 3b	F	X		E-150 SH.25	HV-21215B
	4a 4b	B		X		SPARE
TOP	5a 5b	F	X			SPARE *
	6a 6b	B		X		SPARE
BTM	7a 7b	F	X			SPARE *
	8a 8b	B		X		SPARE

CONTROL SWITCH: HS-21210BI
GENERAL ELECTRIC TYPE CR2940
MAINTAINED CONTACTS

MOTOR OVERLOAD BYPASS
RHR SW SYSTEM UNIT 2 II

CONT ISO SYS UNIT 2 DIV I

OPERATE | TEST

OC697 F.V.

SWITCH DEVELOPMENT

BLOCK No.	CONTACT No.		POSITION OPERATE	POSITION TEST	DRAWING No.	REMARKS
TOP	1a 1b	F	X		E-171 SH.14	HV-25766
	2a 2b	B		X		SPARE *
BTM	3a 3b	F	X		E-172 SH.4	HV-22603
	4a 4b	B		X		SPARE
TOP	5a 5b	F	X		E-147 SH.10	HV-21313
	6a 6b	B		X		SPARE
BTM	7a 7b	F	X		E-147 SH.9	HV-21314
	8a 8b	B		X		SPARE

CONTROL SWITCH: HS-25766A
GENERAL ELECTRIC TYPE CR2940
MAINTAINED CONTACTS

MOTOR OVERLOAD BYPASS
CONTAINMENT ISO SYS UNIT 2 I

CONT ISO SYS UNIT 2 DIV II

OPERATE | TEST

OC697 F.V.

SWITCH DEVELOPMENT

BLOCK No.	CONTACT No.		POSITION OPERATE	POSITION TEST	DRAWING No.	REMARKS
TOP	1a 1b	F	X		E-171 SH.16	HV-25768
	2a 2b	B		X		SPARE *
BTM	3a 3b	F	X		E-147 SH.15	HV-21345
	4a 4b	B		X		SPARE
TOP	5a 5b	F	X		E-147 SH.14	HV-21346 2
	6a 6b	B		X		SPARE
BTM	7a 7b	F	X			SPARE *
	8a 8b	B		X		SPARE

CONTROL SWITCH: HS-25768A
GENERAL ELECTRIC TYPE CR2940
MAINTAINED CONTACTS

MOTOR OVERLOAD BYPASS
CONTAINMENT ISO SYS UNIT 2 II

NOTES:
1 FOR STANDARD SYMBOLS FOR ELECTRICAL DIAGRAM SEE DWG. 8856-E-42.
2. * INDICATES SPARE CONTACTS TO BE WIRED OUT TO TERMINAL BLOCK.

PRC APERTURE CARD

REFERENCE DWG'S.	
BECHTEL NO.	PL. NO.
E-42	A-107191
E-147	D-107296
E-150	D-107299
E-171	D-107320
E-172	D-107321

Docket # 50-387
Control # 8330 322011 7-88
Date 3/10/83 of Document:
REGULATORY DOCKET FILE

UNCONTROLLED DOCUMENT
FOR REFERENCE ONLY

NO.	DATE	REVISIONS	BY	CHK	TECH SUPV	ENG MGR	PROJ MGR	APP'S
3	12/1/82	REVISED DWG REF (DCR 42)	JL	RS				
2	9/6/78	REVISED NOTE 2 & AS SHOWN	MPS					
1	9/1/77	ISSUED FOR CONSTRUCTION	MY.	JM				

SCALE NONE | DESIGNED J. WONG | DRAWN M. YOUNG

PENNSYLVANIA POWER & LIGHT COMPANY
ALLENTOWN, PENNSYLVANIA
SUSQUEHANNA STEAM ELECTRIC STATION – UNIT 1, UNIT 2

BECHTEL – SAN FRANCISCO

SCHEMATIC DIAGRAM
MOTOR OVERLOAD BYPASS SYSTEM
UNIT 2

JOB No.	DRAWING No.	REV.
8856	E-185 SH 32	2
D-107334 SH32		

G2P35 SCHEM MTR OVERLOAD BYPS SY W

22 x 34

24X

I certify that the microfilmed image contained on this microform were made in the normal and regular course of business. This is a true, full, correct and complete reproduction and replacement for and/or in lieu of original documents generated by the Bechtel group of companies.
Signed JACINTO Camera Operator Date 3-23-83 Camera Type MRG I

D

This drawing and the design it covers are the property of BECHTEL. They are merely lent and on the borrower's express agreement that they will not be reproduced, copied, loaned, exhibited, nor used except in the limited way and private use permitted by any written consent given by the lender to the borrower.

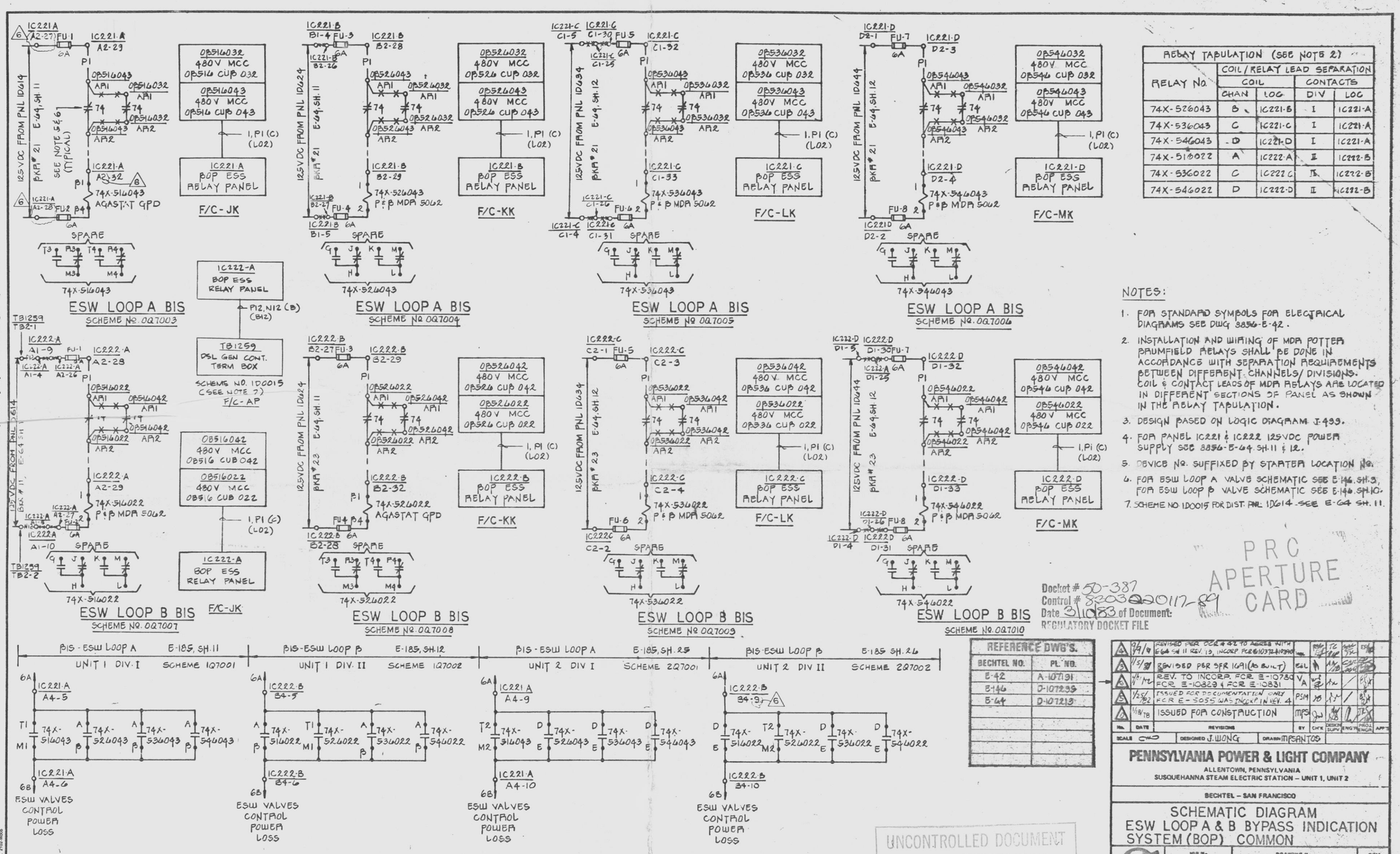

RELAY TABULATION (SEE NOTE 2)				
RELAY No.	COIL/RELAY LEAD SEPARATION			
	COIL		CONTACTS	
	CHAN	LOC	DIV	LOC
74X-526043	B	IC221-B	I	IC221-A
74X-536043	C	IC221-C	I	IC221-A
74X-546043	D	IC221-D	I	IC221-A
74X-516022	A	IC222-A	II	IC222-B
74X-536022	C	IC222-C	II	IC222-B
74X-546022	D	IC222-D	II	IC222-B

NOTES:

1. FOR STANDARD SYMBOLS FOR ELECTRICAL DIAGRAMS SEE DWG 8856-E-42.
2. INSTALLATION AND WIRING OF MDR POTTER BRUMFIELD RELAYS SHALL BE DONE IN ACCORDANCE WITH SEPARATION REQUIREMENTS BETWEEN DIFFERENT CHANNELS/DIVISIONS. COIL & CONTACT LEADS OF MDR RELAYS ARE LOCATED IN DIFFERENT SECTIONS OF PANEL AS SHOWN IN THE RELAY TABULATION.
3. DESIGN BASED ON LOGIC DIAGRAM J-493.
4. FOR PANEL IC221 & IC222 125VDC POWER SUPPLY SEE 8856-E-64 SH. 11 & 12.
5. DEVICE NO. SUFFIXED BY STARTER LOCATION NO.
6. FOR ESW LOOP A VALVE SCHEMATIC SEE E-146 SH.3, FOR ESW LOOP B VALVE SCHEMATIC SEE E-146 SH.10.
7. SCHEME NO. 1D0015 FOR DIST. PNL 1D614 - SEE E-64 SH. 11.

REFERENCE DWG'S.	
BECHTEL NO.	PL. NO.
E-42	A-107191
E-146	D-107235
E-64	D-107213

No.	DATE	REVISIONS	BY	CH'K	DESIGN ENGR	PROJ ENGR	APP'D
6	9/9/82	REVISED PER DCA # 82-10 AGREE WITH E-64 SH 11 REV. 13, INCORP. PER 610372-419390	WB	JW	TC	ESW	
5	1/5/82	REVISED PER SFR 1C91 (AS BUILT)	EGL		MB	ESW	
4	1/4/82	REV. TO INCORP. FOR E-10783 FCR E-10829 & FCR E-10831	VA	WB	MB		
3	12/5/80	ISSUED FOR DOCUMENTATION ONLY FOR E-5055 WAS INCORP IN REV. 4	PSM	JW	MB		
2	11/18/78	ISSUED FOR CONSTRUCTION	MPS	JW	MB		

SCALE: NO | DESIGNED J. WONG | DRAWN M. SANTOS

PENNSYLVANIA POWER & LIGHT COMPANY
ALLENTOWN, PENNSYLVANIA
SUSQUEHANNA STEAM ELECTRIC STATION – UNIT 1, UNIT 2

BECHTEL – SAN FRANCISCO

SCHEMATIC DIAGRAM
ESW LOOP A & B BYPASS INDICATION SYSTEM (BOP) COMMON

JOB No.	DRAWING No.	REV.
8856	E-185 SH.33	6
	D-107334 SH 33	

UNCONTROLLED DOCUMENT FOR REFERENCE ONLY

PRC APERTURE CARD

Docket # 50-387
Control # 8203220117-89
Date 3/10/83 of Document:
REGULATORY DOCKET FILE

24X

I certify that the microfilmed image contained on this microform were made in the normal and regular course of business. This is a true, full, correct and complete reproduction and replacement for and/or in lieu of original documents generated by the Bechtel group of companies.
Signed DANNY Camera Operator Date 2-28-82 Camera Type MRG 1

This drawing and the design it covers are the property of BECHTEL. They are merely loaned and on the borrower's express agreement that they will not be reproduced, copied, loaned, exhibited, nor used except in the limited way and private use permitted by any written consent given by the lender to the borrower.

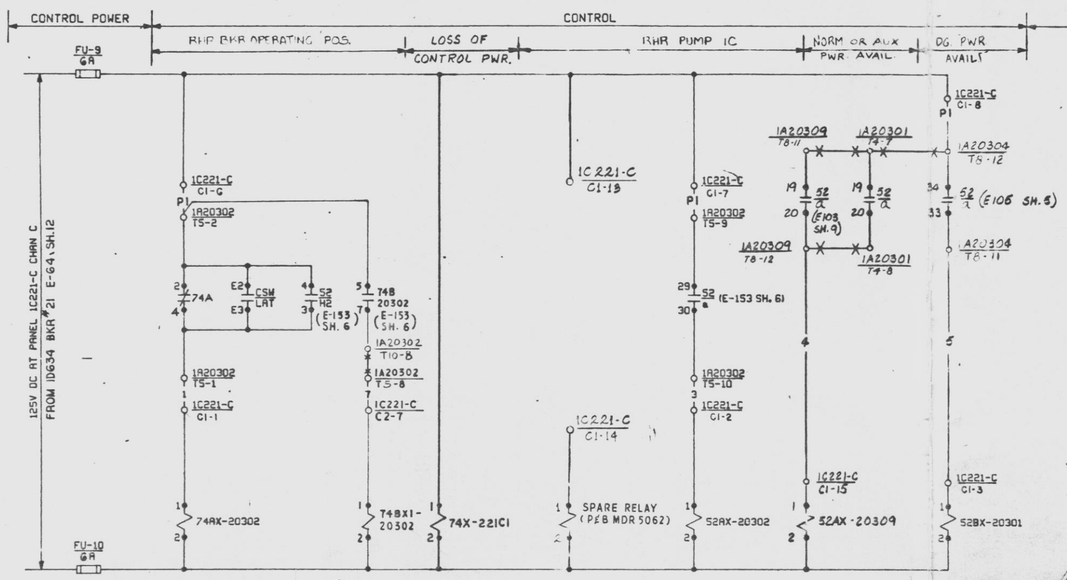

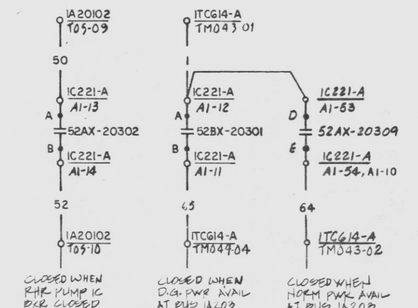

RELAY TABULATION (SEE NOTE 2)				
RELAY NO	COIL/RELAY LEAD SEPARATION			
	COIL		CONTACTS	
	CHAN	LOC	DIV	LOC
74AX-20302	C	1C221-C	I	1C221-A
74X-221C1	C	1C221-C	I	1C221-A
52AX-20302	C	1C221-C	I	1C221-A
52BX-20301	C	1C221-C	I	1C221-A
52AX-20309	C	1C221-C	I	1C221-A

ALL RELAYS ARE P & B MDR 5062

NOTES:

1. FOR STANDARD SYMBOLS FOR ELECTRICAL DIAGRAMS SEE DWG 8856-E-42.
2. INSTALLATION AND WIRING OF MDR POTTER BRUMFIELD RELAYS SHALL BE DONE IN ACCORDANCE WITH SEPARATION REQUIREMENTS BETWEEN DIFFERENT CHANNELS/DIVISIONS. COIL & CONTACT LEADS OF MDR RELAYS ARE LOCATED IN DIFFERENT SECTIONS OF PANEL AS SHOWN IN THE RELAY TABULATION.

REFERENCE DWGS.	
BECHTEL NO.	PL NO.
E-42	A-107191
E-103	D-107252
E-105	D-107254
E-153	D-107302
E-223	D-107372
E-64	D-107213
MI-E11-66	FF1247510

NO.	DATE	REVISIONS	BY	CHK	DESIGN SUPV	ENG	PROJ ENGR	APP'D
5	10/5/84	BFHG(W.A. 5-95) WAS INCORPORATED ON REV 3	RS	RR				
4	9/11/84	REVISED TO INCORPORATE DCP 4120 & DCN 4104, 4141, 4150, 4155, 4156 & 4157 (LOCKING DEVICES) & DCN 4148	EMR					
3	7/27/84	ISSUED AS BUILT REVD TO INCORP IDCN 4 (DCP C44-118 IDCN 4 & DCP B85-123)	EMR					
2	4/19/84	REVISED TO INCORP PCR # E-10867 & PCR # E-10952	EMR	NPJ				
1	1/11/84	REVISED TO INCORPORATE FCN-E-10752 & FCR-E-6326	EMR	CJN				
0	11/21/83	ISSUED FOR CONSTRUCTION	PJ	WJ				

SCALE NONE | DESIGNED J. WONG | DRAWN

PENNSYLVANIA POWER & LIGHT COMPANY
ALLENTOWN, PENNSYLVANIA
SUSQUEHANNA STEAM ELECTRIC STATION – UNIT 1, UNIT 2

BECHTEL – SAN FRANCISCO

SCHEMATIC DIAGRAM
CHAN C / DIV I ISOLATION
RHR SYS UNIT 1

JOB No.	DRAWING No.	REV.
8856	E-185 SH 34	8

D-107334 SH 34

PRC APERTURE CARD

THIS DOCUMENT IS UNDER PP&L ADMINISTRATIVE CONTROL. NO CHANGES CAN BE MADE WITHOUT PRIOR PP&L APPROVAL.

Docket # 50-387
Control # 8302220117-90
Date 3/10/83 of Document:
REGULATORY DOCKET FILE

UNCONTROLLED DOCUMENT FOR REFERENCE ONLY

GIPSS CHAN C/DIV I ISO RHR SYS W

24X

I certify that the microfilmed image contained on this microform was made in the normal and regular course of business. This is a true, full, correct and complete reproduction and replacement for and/or in lieu of original documents. Camera Operator MRG-H

This drawing and the design it covers are the property of BECHTEL. They are merely loaned and on the borrower's express agreement that they will not be reproduced, copied, loaned, exhibited, nor used except in the limited way and private use permitted by any written consent given by the lender to the borrower.

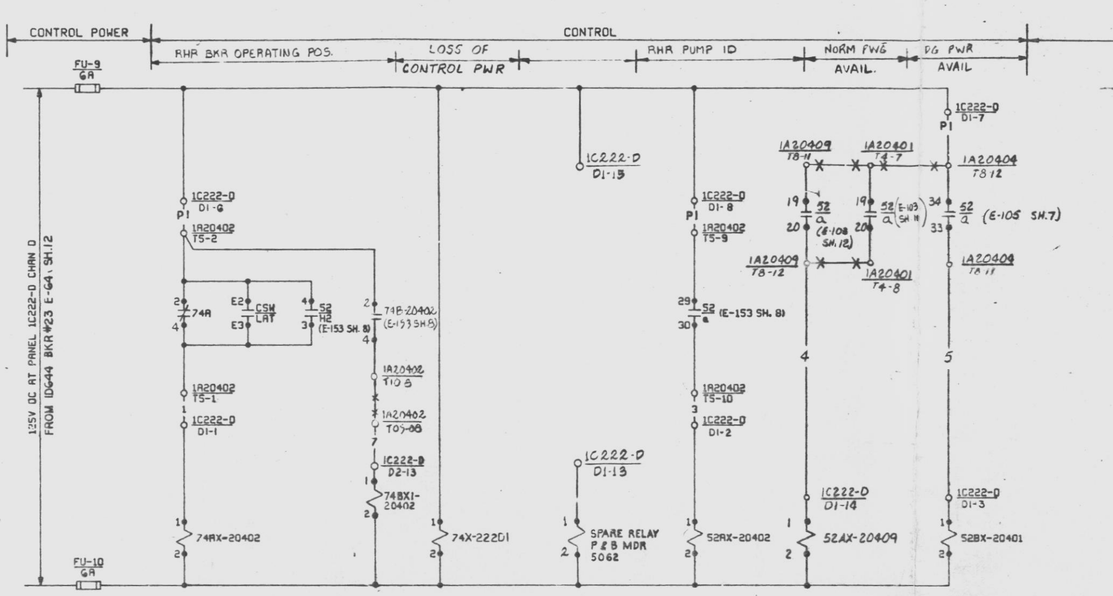

CHAN D / DIV II ISOLATION
RHR SYS
SCHEME NO. IQ7052

RELAY TABULATION (SEE NOTE 2)				
RELAY NO	COIL/RELAY LEAD SEPARATION			
	COIL		CONTACTS	
	CHAN	LOC	DIV	LOC
74AX-20402	D	1C222-D	II	1C222-B
74X-222D1	D	1C222-D	II	1C222-B
52AX-20402	D	1C222-D	II	1C222-B
52BX-20401	D	1C222-D	II	1C222-B
52AX-20409	D	1C222-D	II	1C222-B

ALL RELAYS ARE P & B MDR 5062

NOTES:

1. FOR STANDARD SYMBOLS FOR ELECTRICAL DIAGRAMS SEE DWG 8856-E-42.
2. INSTALLATION AND WIRING OF MDR POTTER BRUMFIELD RELAYS SHALL BE DONE IN ACCORDANCE WITH SEPARATION REQUIREMENTS BETWEEN DIFFERENT CHANNELS/DIVISIONS. COIL & CONTACT LEADS OF MDR RELAYS ARE LOCATED IN DIFFERENT SECTIONS OF PANEL AS SHOWN IN THE RELAY TABULATION.

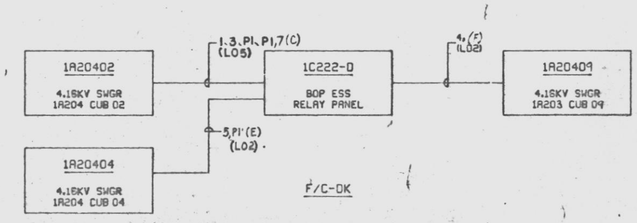

REFERENCE DWGS.	
BECHTEL NO.	PL NO.
E-42	A-107191
E-103	D-107252
E-105	D-107254
E-153	D-107302
E-223	D-107372
E-G4	D-107213
MI-E11-66	FF124510

Docket #50-387
Control #8303220117-91
Date 3/10/83 of Document:
REGULATORY DOCKET FILE

UNCONTROLLED DOCUMENT FOR REFERENCE ONLY

PRC APERTURE CARD

THIS DOCUMENT IS UNDER PP&L ADMINISTRATIVE CONTROL. NO CHANGES CAN BE MADE WITHOUT PRIOR PP&L APPROVAL.

NO.	DATE	REVISIONS	BY	CHK	DESIGN SUPV.	ENG'G	PROJ. ENGR.	APP'D
A	7/18/84	REVISED TO INCORPORATE DCP 046, IDO, [illegible]	JRH					
A	2/1/84	REV. #3 ISSUED AS BUILT" REV'D TO INCORP. DCN NO.4 DCP # 046, IDO	[illegible]					
B	1/24/83	REV'D TO INCORP. IDCN #3 DCP 8016 & 8316 FOR E-5337	[illegible]					
A	3/22/82	REVISED TO INCORPORATE PCR E-10075	DRS	CJN				
A	9/18/78	ISSUED FOR CONSTRUCTION						

SCALE NONE | DESIGNED J. WONG | DRAWN

PENNSYLVANIA POWER & LIGHT COMPANY
ALLENTOWN, PENNSYLVANIA
SUSQUEHANNA STEAM ELECTRIC STATION – UNIT 1, UNIT 2

BECHTEL – SAN FRANCISCO

SCHEMATIC DIAGRAM
CHAN D / DIV II ISOLATION
RHR SYS UNIT 1

JOB No.	DRAWING No.	REV.
8856	E-185 SH 35	7

D-107334 SH 35

G|P|3|5 | C|H|A|N| D/D|I|V| II | I|S|O| A|H|R| S|Y|S | W

22 x 34 "D" SIZE

24X

I certify that the microfilmed images contained on this microforms were made in the normal and regular course of business. This is a true, full, correct and complete reproductions and replacements made in lieu of original documents.

JACINTO MRG I

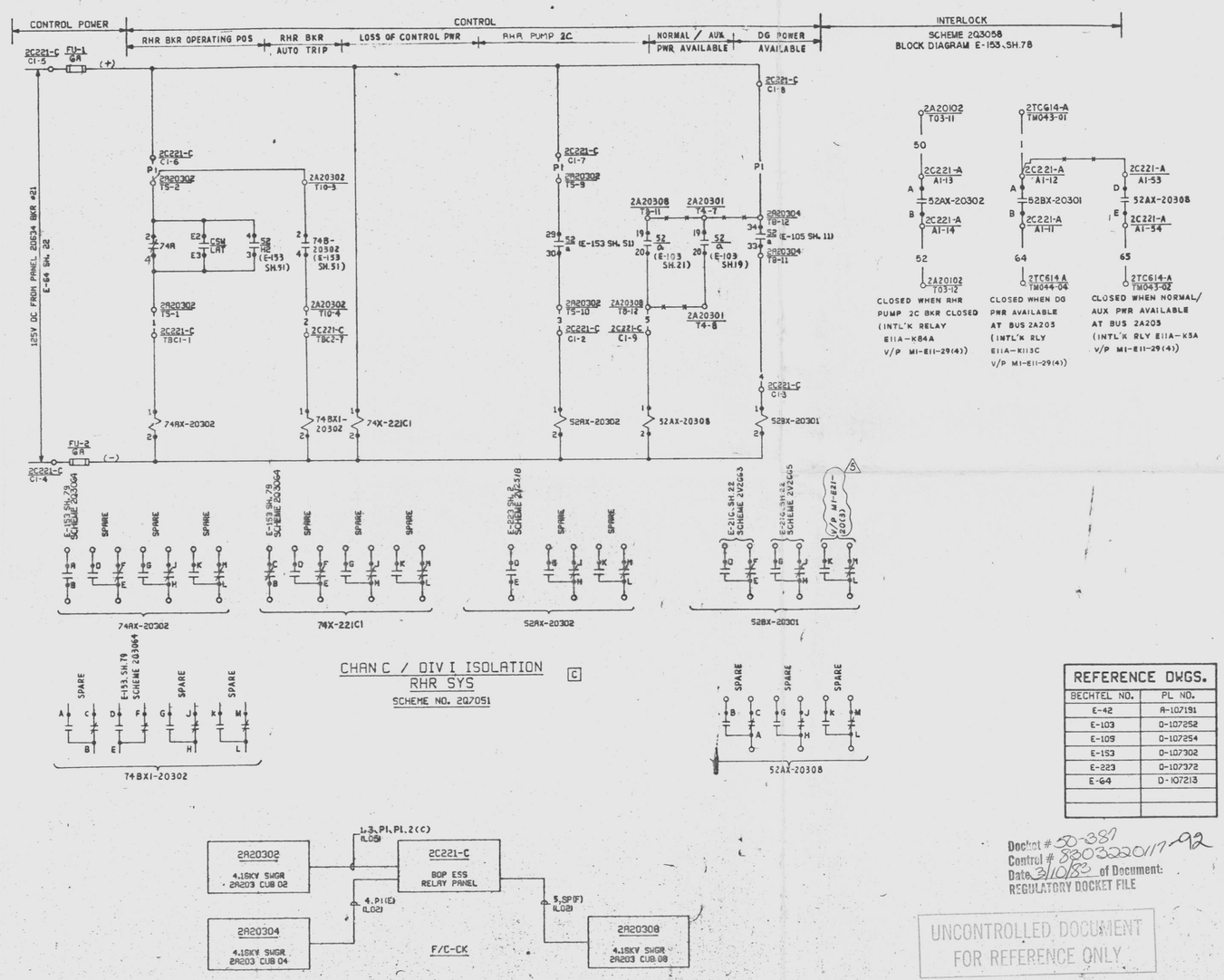

RELAY TABULATION (SEE NOTE 2)				
RELAY NO	COIL/RELAY LEAD SEPARATION			
	COIL		CONTACTS	
	CHAN	LOC	DIV	LOC
74AX-20302	C	2C221-C	I	2C221-A
74-221C1	C	2C221-C	I	2C221-A
52AX-20302	C	2C221-C	I	2C221-A
52BX-20301	C	2C221-C	I	2C221-A
52AX-20308	C	2C221-C	I	2C221-A
74BX1-20302	C	2C221-C	I	2C221-A

ALL RELAYS ARE P & B MDR 5062

CLOSED WHEN RHR PUMP 2C BKR CLOSED (INTL'K RELAY E11A-K84A V/P M1-E11-29(4))

CLOSED WHEN DG PWR AVAILABLE AT BUS 2A203 (INTL'K RLY E11A-K113C V/P M1-E11-29(4))

CLOSED WHEN NORMAL/AUX PWR AVAILABLE AT BUS 2A203 (INTL'K RLY E11A-K3A V/P M1-E11-29(4))

NOTES:

1. FOR STANDARD SYMBOLS FOR ELECTRICAL DIAGRAMS SEE DWG 8856-E-42.
2. INSTALLATION AND WIRING OF MDR POTTER BRUMFIELD RELAYS SHALL BE DONE IN ACCORDANCE WITH SEPARATION REQUIREMENTS BETWEEN DIFFERENT CHANNELS/DIVISIONS. COIL & CONTACT LEADS OF MDR RELAYS ARE LOCATED IN DIFFERENT SECTIONS OF PANEL AS SHOWN IN THE RELAY TABULATION.

PRC APERTURE CARD

REFERENCE DWGS.	
BECHTEL NO.	PL NO.
E-42	A-107191
E-103	D-107252
E-109	D-107254
E-153	D-107302
E-223	D-107372
E-64	D-107213

NO.	DATE	REVISIONS	BY	CHK	DESIGN SUPV	ENG'G	PROJ ENGR	APP'D
4	10/16/81	REVISED 74A-TERM NO PER DCP451.6.						
3	9/23/81	REVISED PER DCP451.6, REV 0 (DCR451) DCP 523 REV 0 (SFR1576); DCP 585 (FDT MDR)	JL					
2	5/6/79	REV. PER LOGIC DIAG. V-187, SH.15 AND ADDED TERMINAL NO. S	MPS	BW				
1	5/11/82	REV PER DCP 644.2	JL					
0	1/18/78	ISSUED FOR CONSTRUCTION						

SCALE NONE | DESIGNED J. WONG | DRAWN

PENNSYLVANIA POWER & LIGHT COMPANY
ALLENTOWN, PENNSYLVANIA
SUSQUEHANNA STEAM ELECTRIC STATION – UNIT 1, UNIT 2

BECHTEL – SAN FRANCISCO

SCHEMATIC DIAGRAM
CHAN C / DIV I ISOLATION
RHR SYS UNIT 2

JOB No.	DRAWING No.	REV.
8856	E-185 SH 36	5

D-107334 SH 36

Docket # 50-387
Control # 8303220117-92
Date 3/10/83 of Document:
REGULATORY DOCKET FILE

UNCONTROLLED DOCUMENT
FOR REFERENCE ONLY

G2P35 CHAN C/DIV I ISO RHR SYS W

D

This drawing and the design it covers are the property of BECHTEL. They are merely loaned and on the borrower's express agreement that they will not be reproduced, copied, loaned, exhibited, nor used except in the limited way and private use permitted by any written consent given by the lender to the borrower.

24X

I certify that the microfilmed image contained on this microform were made in the normal and regular course of business. This is a true, full, correct and complete reproduction and replacement for and/or in lieu of original document. Signature RHEY Date Camera Type MRG-II

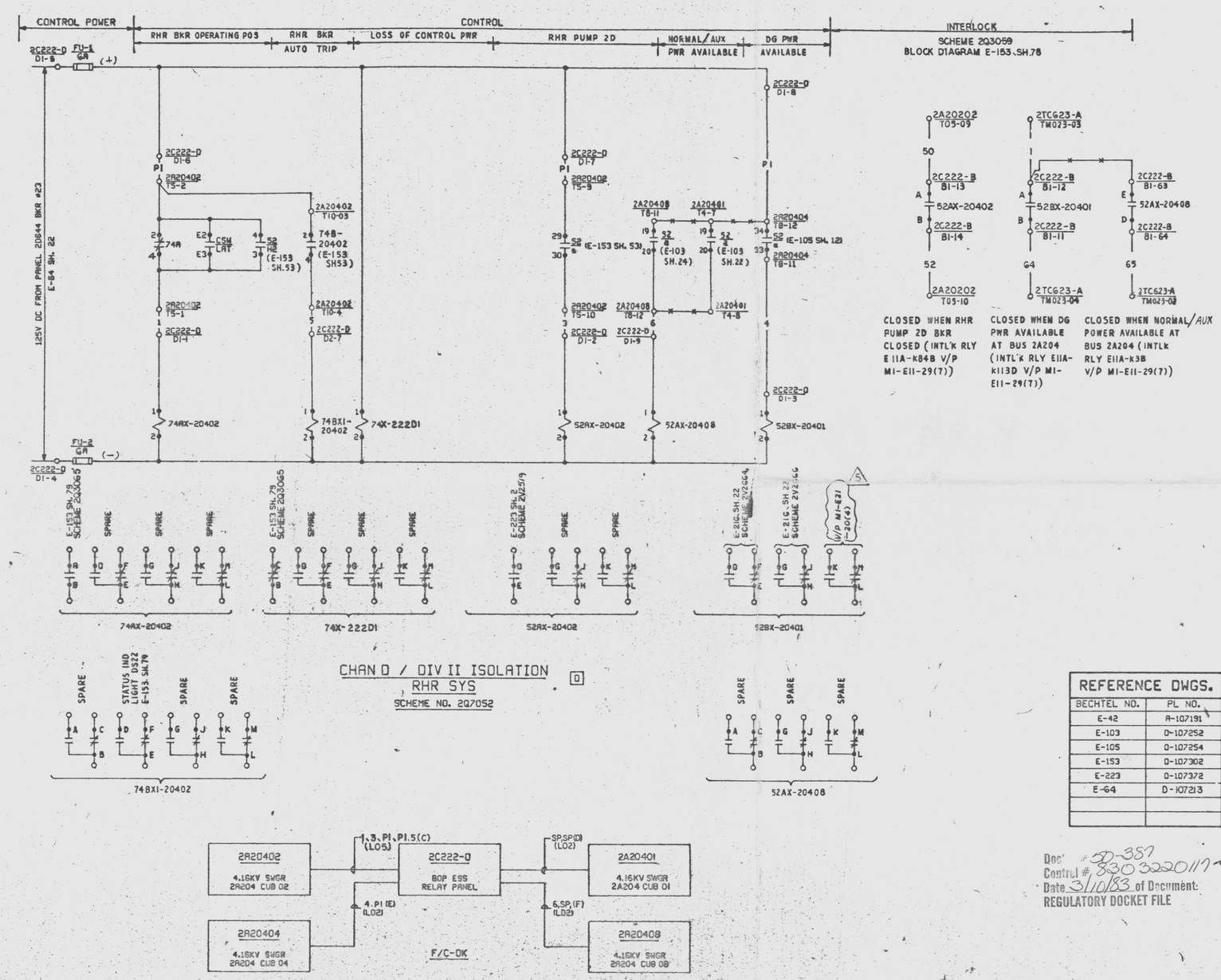

CLOSED WHEN RHR PUMP 2D BKR CLOSED (INTL'K RLY E11A-K84B V/P M1-E11-29(7))

CLOSED WHEN DG PWR AVAILABLE AT BUS 2A204 (INTL'K RLY E11A-K113D V/P M1-E11-29(7))

CLOSED WHEN NORMAL/AUX POWER AVAILABLE AT BUS 2A204 (INTLK RLY E11A-K3B V/P M1-E11-29(7))

RELAY TABULATION (SEE NOTE 2)				
RELAY NO	COIL/RELAY LEAD SEPARATION			
	COIL		CONTACTS	
	CHAN	LOC	DIV	LOC
74AX-20402	D	2C222-D	II	2C222-B
74X-222D1	D	2C222-D	II	2C222-B
52AX-20402	D	2C222-D	II	2C222-B
52BX-20401	D	2C222-D	II	2C222-B
74BX1-20402	D	2C222-D	II	2C222-B
52AX-20408	D	2C222-D	II	2C222-B

ALL RELAYS ARE P & B MDR 5062

NOTES:

1. FOR STANDARD SYMBOLS FOR ELECTRICAL DIAGRAMS SEE DWG 8856-E-42.
2. INSTALLATION AND WIRING OF MDR POTTER BRUMFIELD RELAYS SHALL BE DONE IN ACCORDANCE WITH SEPARATION REQUIREMENTS BETWEEN DIFFERENT CHANNELS/DIVISIONS. COIL & CONTACT LEADS OF MDR RELAYS ARE LOCATED IN DIFFERENT SECTIONS OF PANEL AS SHOWN IN THE RELAY TABULATION.

PRC APERTURE CARD

UNCONTROLLED DOCUMENT FOR REFERENCE ONLY

REFERENCE DWGS.	
BECHTEL NO.	PL NO.
E-42	A-107191
E-103	D-107252
E-105	D-107254
E-153	D-107302
E-223	D-107372
E-64	D-107213

No.	DATE	REVISIONS	BY	CHK	DESIGN SUPV	ENG'R	PROJ ENGR	APP'D
4	10/16/81	REVISED 74A TERM NO PER DCP 451.6						
3	9/23/81	REVISED PER DCP 451.6 REV.0 (DCR451), DCP525 REV.0 (SFR1576) & DCP 565 REV.0 (FDI MDBL-R0)						
2	5/6/79	REVISED PER LOGIC DIAG. V-187 SH.15 AND ADDED TERMINAL NOS	MPS	SW				
1	7/11/82	REV PER DCP 644-2						
0	1/18/78	ISSUED FOR CONSTRUCTION						

SCALE NONE DESIGNED J. WONG DRAWN

PENNSYLVANIA POWER & LIGHT COMPANY
ALLENTOWN, PENNSYLVANIA
SUSQUEHANNA STEAM ELECTRIC STATION – UNIT 1, UNIT 2

BECHTEL – SAN FRANCISCO

SCHEMATIC DIAGRAM
CHAN D / DIV II ISOLATION
RHR SYS UNIT 2

JOB No.	DRAWING No.	REV.
8856	E-185 SH 37	5

D-107334 SH 37

Doc # 50-387
Control # 8303220117-93
Date 3/10/83 of Document:
REGULATORY DOCKET FILE

G2P35 CHAN D/DIV II ISO RHR SYS W

D

This drawing and the design it covers are the property of BECHTEL. They are merely loaned and on the borrower's express agreement that they will not be reproduced, copied, loaned, exhibited, nor used except in the limited way and private use permitted by any written consent given by the lender to the borrower.

24X
I certify that the microfilmed image contained on this microform were made in the normal and regular course of business. This is a true, full, correct and complete reproduction and replacement for and/or in lieu of original documents
RHEY
MRG-H

This drawing and the design it covers are the property of BECHTEL. They are merely loaned and on the borrower's express agreement that they will not be reproduced, copied, loaned, exhibited, nor used except in the limited way and private use permitted by any written consent given by the lender to the borrower.

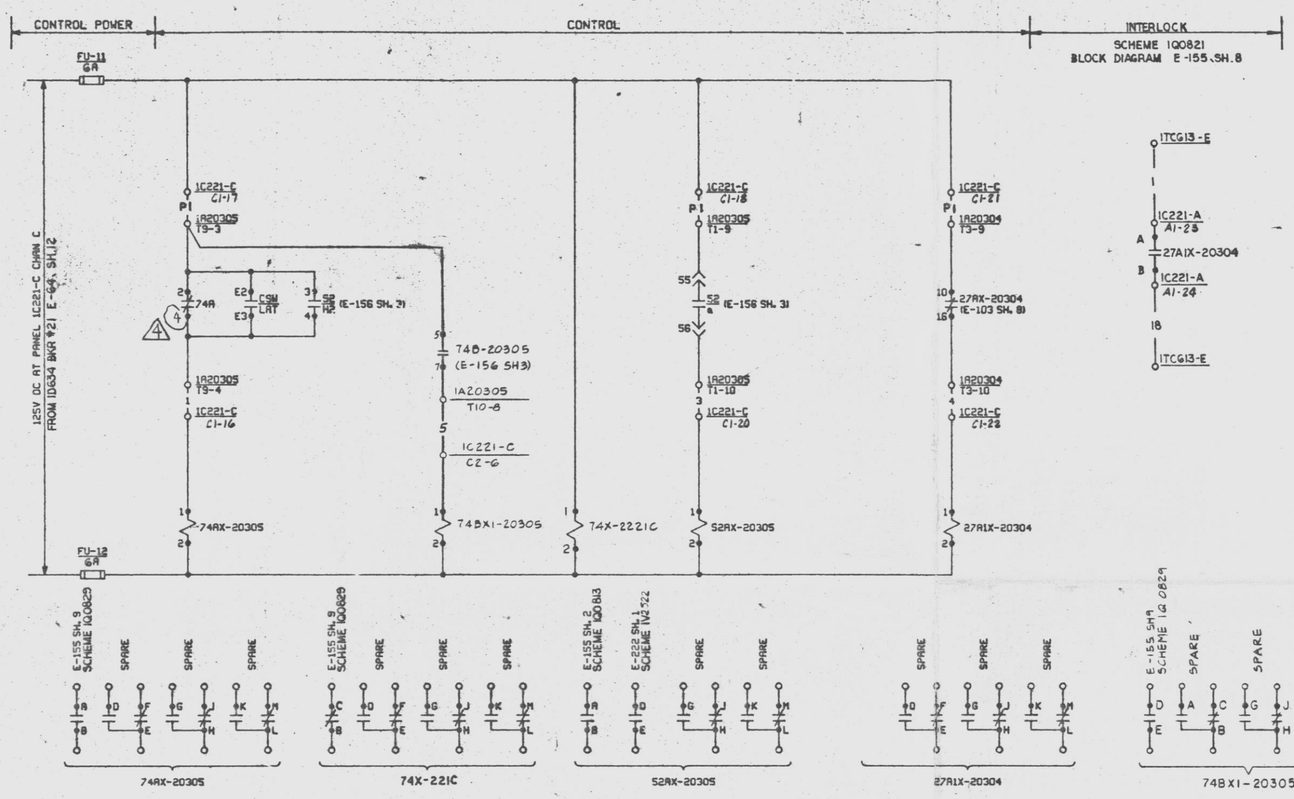

CHAN C / DIV I ISOLATION
CORE SPRAY SYS
SCHEME NO. 1Q7053 [C]

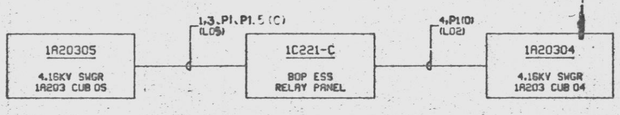

F/C-CK

RELAY TABULATION (SEE NOTE 2)				
RELAY NO	COIL/RELAY LEAD SEPARATION			
	COIL		CONTACTS	
	CHAN	LOC	DIV	LOC
74AX-20305	C	1C221-C	I	1C221-A
74X-221C	C	1C221-C	I	1C221-A
52AX-20305	C	1C221-C	I	1C221-A
27A1X-20304	C	1C221-C	I	1C221-A

ALL RELAYS ARE P & B MDR 5062

NOTES:

1. FOR STANDARD SYMBOLS FOR ELECTRICAL DIAGRAMS SEE DWG 8856-E-42.
2. INSTALLATION AND WIRING OF MDR POTTER BRUMFIELD RELAYS SHALL BE DONE IN ACCORDANCE WITH SEPARATION REQUIREMENTS BETWEEN DIFFERENT CHANNELS/DIVISIONS. COIL & CONTACT LEADS OF MDR RELAYS ARE LOCATED IN DIFFERENT SECTIONS OF PANEL AS SHOWN IN THE RELAY TABULATION.

REFERENCE DWGS.	
BECHTEL NO.	PL NO.
E-42	A-107191
E-103	D-107252
E-155	D-107304
E-156	D-107305
E-222	D-107371
E-64	D-107213

PRC APERTURE CARD

UNCONTROLLED DOCUMENT FOR REFERENCE ONLY

NO.	DATE	REVISIONS	BY	CHK	DESIGN SUPV	ENG MGR	PROJ MGR	APP'D
A	7/15/81	INCORP IDCN #3 (DCP N3 451.3 REV.0) INCORP IDCN #4 (DCP NO 8016 REV.3) REV 27AX-20304 CONTACT (DCR-92)	MPS	DWC				
A	7/22/80	ADDED TERM. #33, DCR 8	JCJ					
A	7/11/80	REVD TO INCORP FCR-E-10844	MPS	CW	TC	/		
0	7/8/78	ISSUED FOR CONSTRUCTION						

SCALE NONE | DESIGNED J. WONG | DRAWN

PENNSYLVANIA POWER & LIGHT COMPANY
ALLENTOWN, PENNSYLVANIA
SUSQUEHANNA STEAM ELECTRIC STATION – UNIT 1, UNIT 2

BECHTEL – SAN FRANCISCO

SCHEMATIC DIAGRAM
CHAN C / DIV I ISOLATION
CORE SPRAY SYS UNIT 1

JOB No.	DRAWING No.	REV.
8856	E-185 SH 38	4

D-107334 SH 38

Docket # 50-387
Control # 8303220117-94
Date 3/10/83 of Document:
REGULATORY DOCKET FILE

GIPSS CHAN C/DIV I ISO CORE SPRY -W

24X

I certify that the microfilmed image contained on this microform was made in the normal and regular course of business. This is a true, full, correct and complete microfilm and replacement for and/or in lieu of original documents. Signature of Recipient or Custodian.
RHEY
MRG-1

D

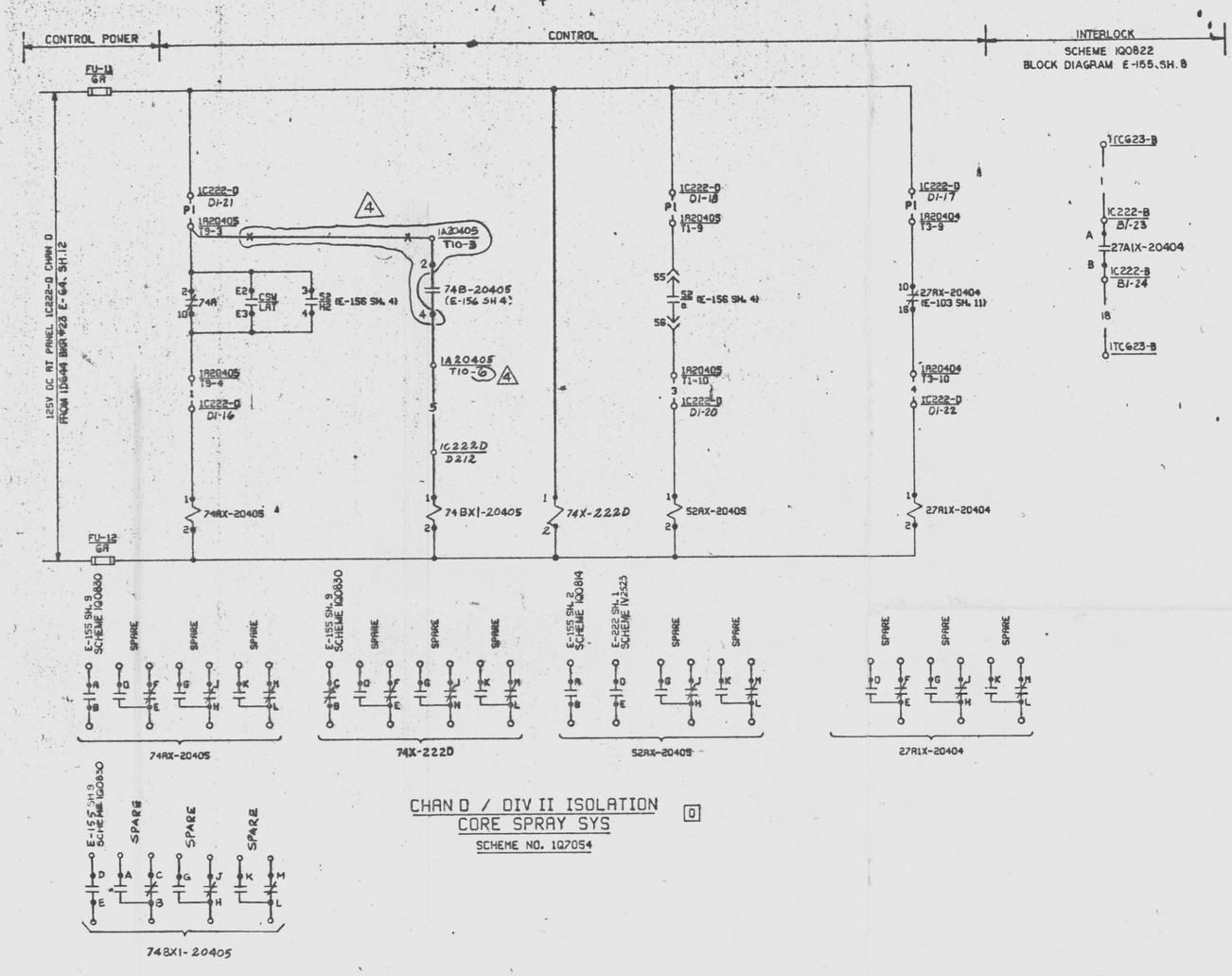

CHAN D / DIV II ISOLATION
CORE SPRAY SYS
SCHEME NO. 1Q7054

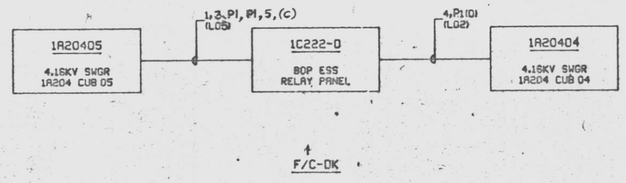

F/C-DK

RELAY TABULATION (SEE NOTE 2)				
RELAY NO	COIL/RELAY LEAD SEPARATION			
	COIL		CONTACTS	
	CHAN	LOC	DIV	LOC
74AX-20405	D	1C222-D	II	1C222-B
74X-222D	D	1C222-D	II	1C222-B
52AX-20405	D	1C222-D	II	1C222-B
27A1X-20404	D	1C222-D	II	1C222-B

ALL RELAYS ARE P & B MDR 5062

NOTES

1. FOR STANDARD SYMBOLS FOR ELECTRICAL DIAGRAMS SEE DWG 8856-E-42.
2. INSTALLATION AND WIRING OF MDR POTTER BRUMFIELD RELAYS SHALL BE DONE IN ACCORDANCE WITH SEPARATION REQUIREMENTS BETWEEN DIFFERENT CHANNELS/DIVISIONS. COIL & CONTACT LEADS OF MDR RELAYS ARE LOCATED IN DIFFERENT SECTIONS OF PANEL AS SHOWN IN THE RELAY TABULATION.

Docket # 50-387
Control # 8303220117-95
Date 3/10/83 of Document:
REGULATORY DOCKET FILE

UNCONTROLLED DOCUMENT
FOR REFERENCE ONLY

REFERENCE DWGS.	
BECHTEL NO.	PL NO.
E-42	A-107191
E-103	D-107252
E-155	D-107304
E-156	D-107305
E-222	D-107371
E-64	D-107213

No.	DATE	REVISIONS	BY	CH'K	DESIGN SUPV	ENG'R	PROJ ENG'R	APP'S
4	9/12/82	REV'D. TO INCORP. FCR # E-10841	EAR	[illegible]	[illegible]	/	[illegible]	
3	7/22/81	INCORP IDCN #3 (DCP 4514) IDCN #4 (DCP 8016 REV 3) & REV CONTACT PER DCR #4	[illegible]	[illegible]	[illegible]	[illegible]	[illegible]	
2	1/22/80	ADDED TERM Nos (DCR 8)	JGJ	[illegible]	[illegible]	[illegible]	[illegible]	
1	[illegible]	REVISED AS SHOWN	MPS	[illegible]	[illegible]	[illegible]	[illegible]	
0	1/28/78	ISSUED FOR CONSTRUCTION	[illegible]	[illegible]	[illegible]	[illegible]	[illegible]	

SCALE NONE | DESIGNED J. HONG | DRAWN

PENNSYLVANIA POWER & LIGHT COMPANY
ALLENTOWN, PENNSYLVANIA
SUSQUEHANNA STEAM ELECTRIC STATION – UNIT 1, UNIT 2

BECHTEL – SAN FRANCISCO

SCHEMATIC DIAGRAM
CHAN D / DIV II ISOLATION
CORE SPRAY SYS UNIT 1

JOB No.	DRAWING No.	REV.
8856	E-185 SH 39	4

D-107334 SH 39

PRC APERTURE CARD

G1P35 CHAN D/DIV II ISO CORE SPRY W

This drawing and the design it covers are the property of BECHTEL. They are merely loaned and on the borrower's express agreement that they will not be reproduced, copied, loaned, exhibited, nor used except in the limited way and private use permitted by any written consent given by the lender to the borrower.

24X

I certify that the microfilmed image contained on this microform were made in the normal and regular course of business. This is a true, full, correct and complete reproduction and replacement for and/or in lieu of original documents generated by the Bechtel group of companies.
Signed DANNY Camera Operator Date 4-21-82 Camera Type MRG 1

D

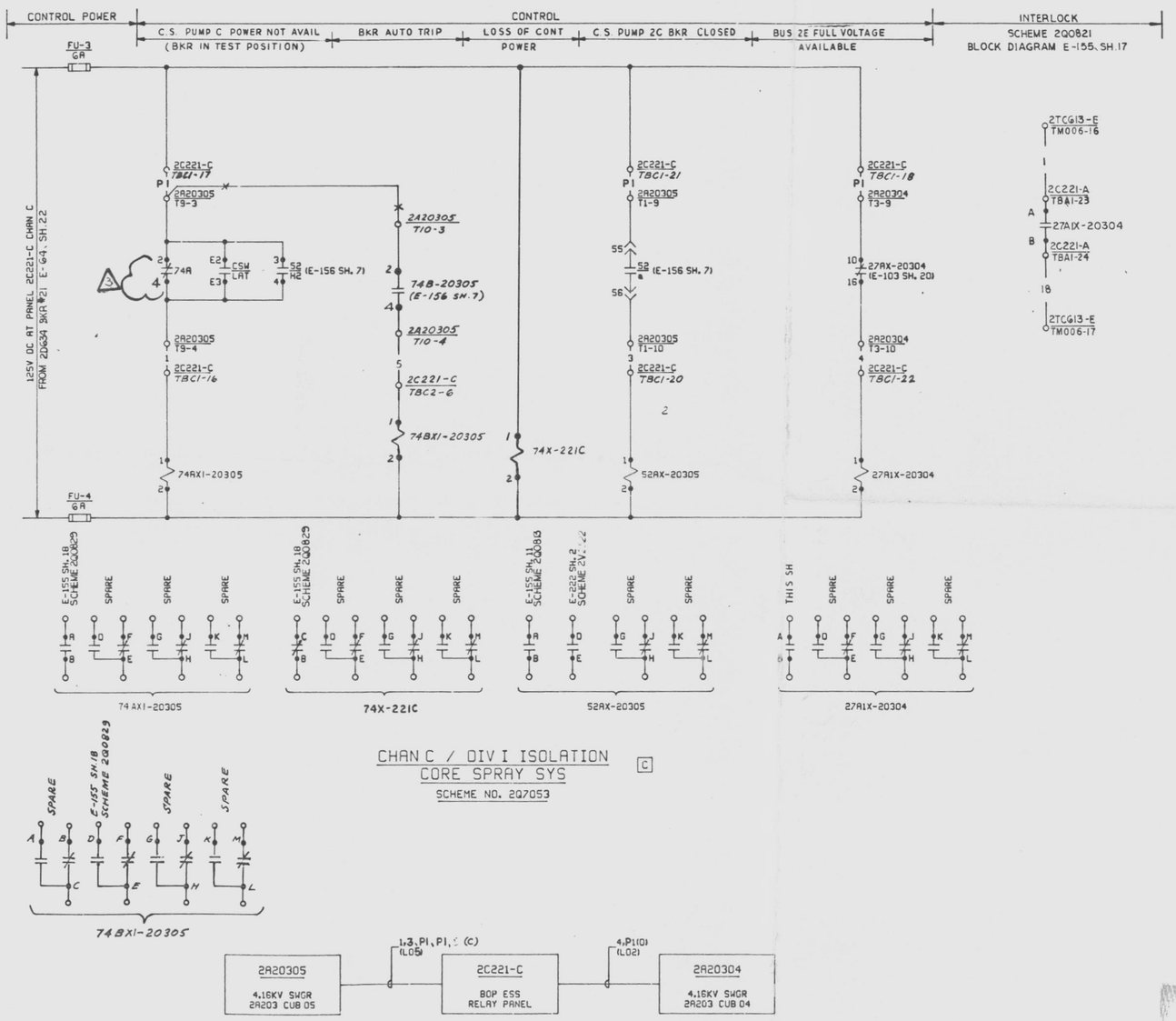

CHAN C / DIV I ISOLATION
CORE SPRAY SYS
SCHEME NO. 2Q7053

F/C-CK

RELAY TABULATION (SEE NOTE 2)				
RELAY NO	COIL/RELAY LEAD SEPARATION			
	COIL		CONTACTS	
	CHAN	LOC	DIV	LOC
74AX1-20305	C	2C221-C	I	2C221-A
74X-221C	C	2C221-C	I	2C221-A
52AX-20305	C	2C221-C	I	2C221-A
27A1X-20304	C	2C221-C	I	2C221-A
74BX1-20305	C	2C221-C	I	2C221-A

ALL RELAYS ARE P & B MDR 5062

NOTES:

1. FOR STANDARD SYMBOLS FOR ELECTRICAL DIAGRAMS SEE DWG 8856-E-42.
2. INSTALLATION AND WIRING OF MDR POTTER BRUMFIELD RELAYS SHALL BE DONE IN ACCORDANCE WITH SEPARATION REQUIREMENTS BETWEEN DIFFERENT CHANNELS/DIVISIONS. COIL & CONTACT LEADS OF MDR RELAYS ARE LOCATED IN DIFFERENT SECTIONS OF PANEL AS SHOWN IN THE RELAY TABULATION.

Docket # 50-387
Control # 8303220117-96
Date 3/10/83 of Document:
DOCKET FILE

UNCONTROLLED DOCUMENT
FOR REFERENCE ONLY

REFERENCE DWGS.	
BECHTEL NO.	PL NO.
E-42	A-107191
E-103	D-107252
E-155	D-107304
E-156	D-107305
E-222	D-107371
E-64	D-107213

No.	DATE	REVISIONS	BY	CH'K	DESIGN SUPV	ENG'R	PROJ ENGR	APP'S
3	10/16/81	REVISED 74A-TERM NO PER DCP 451.6	NSB	NO	RPT			
2	9/21/81	ADDED TERMINAL NO'S (DCR 9); RLY. 74B INTLK DCP 451.6, REV. 0 (DCR 451); ADDED RLY 74BX1-20305 (DCP 523, REV. 0-SPR 1262)	NSB	NPS MH				
1	4/14/81	REVISED AS SHOWN	MPS					
0	7/8/78	ISSUED FOR CONSTRUCTION						

SCALE NONE | DESIGNED J. WONG | DRAWN NSB

PENNSYLVANIA POWER & LIGHT COMPANY
ALLENTOWN, PENNSYLVANIA
SUSQUEHANNA STEAM ELECTRIC STATION – UNIT 1, UNIT 2

BECHTEL – SAN FRANCISCO

SCHEMATIC DIAGRAM
CHAN C / DIV I ISOLATION
CORE SPRAY SYS UNIT 2

JOB No.	DRAWING No.	REV.
8856	E-185 SH 40	3

D-107334 SH 40

PRC APERTURE CARD

G2P35 CHAN C/DIV I ISO CORE SPRY W

22 x 34 "D" SIZE

This drawing and the design it covers are the property of BECHTEL. They are merely loaned and on the borrower's express agreement that they will not be reproduced, copied, loaned, exhibited, nor used except in the limited way and private use permitted by any written consent given by the lender to the borrower.

24X

D

This drawing and the design it covers are the property of BECHTEL. They are merely loaned and on the borrower's express agreement that they will not be reproduced, copied, loaned, exhibited, nor used except in the limited way and private use permitted by any written consent given by the lender to the borrower.

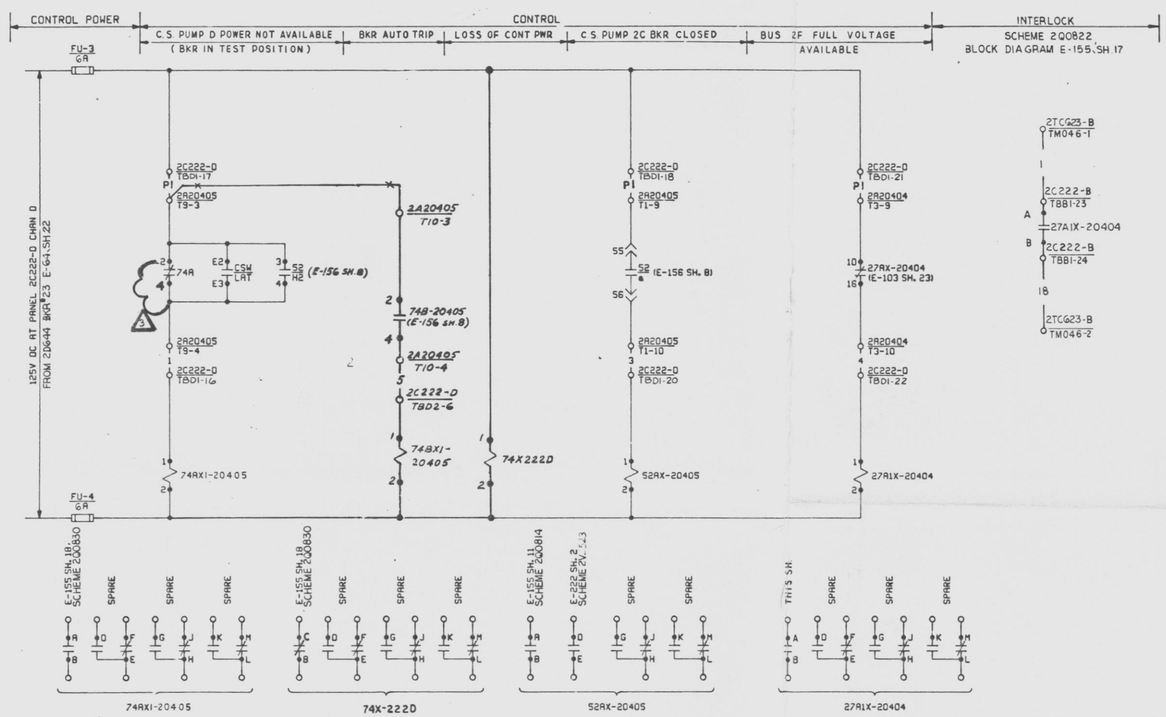

RELAY TABULATION (SEE NOTE 2)				
RELAY NO	COIL/RELAY LEAD SEPARATION			
	COIL		CONTACTS	
	CHAN	LOC	DIV	LOC
74AX1-20405	D	2C222-D	II	2C222-B
74X-222D	D	2C222-D	II	2C222-B
52AX-20405	D	2C222-D	II	2C222-B
27AIX-20404	D	2C222-D	II	2C222-B
74BX1-20405	D	2C222-D	II	2C222-B

ALL RELAYS ARE P & B MDR 5062

NOTES:

1. FOR STANDARD SYMBOLS FOR ELECTRICAL DIAGRAMS SEE DWG 8856-E-42.
2. INSTALLATION AND WIRING OF MDR POTTER BRUMFIELD RELAYS SHALL BE DONE IN ACCORDANCE WITH SEPARATION REQUIREMENTS BETWEEN DIFFERENT CHANNELS/DIVISIONS. COIL & CONTACT LEADS OF MDR RELAYS ARE LOCATED IN DIFFERENT SECTIONS OF PANEL AS SHOWN IN THE RELAY TABULATION.

REFERENCE DWGS.	
BECHTEL NO.	PL NO.
E-42	A-107191
E-103	D-107252
E-155	D-107304
E-156	D-107305
E-222	D-107371
E-64	D-107213

Docket # 50-387
Control # 8303220117-97
Date 3/18/83 of Document:
REGULATORY DOCKET FILE

PRC APERTURE CARD

UNCONTROLLED DOCUMENT FOR REFERENCE ONLY

NO.	DATE	REVISIONS	BY	CHK.	SUPV. ENGR.	ENGR.	APP'D
4	10/4/11	REVISED 74A TERM NO. PER DCP 4516	JSB	WFJ	WFJ		
3	1/1/08	ADDED 74BX1 INTLK & RELAY TABLE PER DCP 4511-G REV 0 (DCP 4140 & DCP 4218 REV 0 SUPS) ADDED TB INFO. (CODE 3)	JSB	NFS	WFJ		
2	9/19/91	REVISED AS SHOWN	MPS	JSB			
1	1/6/13	ISSUED FOR CONSTRUCTION	JSB	WFJ			

SCALE NONE | DESIGNED J. WONG | DRAWN

PENNSYLVANIA POWER & LIGHT COMPANY
ALLENTOWN, PENNSYLVANIA
SUSQUEHANNA STEAM ELECTRIC STATION – UNIT 1, UNIT 2

BECHTEL – SAN FRANCISCO

SCHEMATIC DIAGRAM
CHAN D / DIV II ISOLATION
CORE SPRAY SYS UNIT 2

JOB No.	DRAWING No.	REV.
8856	E-185 SH 41	3

D-107334 SH 41

G2P35 CHAN D/DIV II ISO CORE SPRY W

22 x 34 "D" SIZE

D

24X

I certify that this microfilmed image contained on this aperture card is an exact reproduction of the original engineering drawing. This is a true, fully, correct and complete microfilm and replacement for and/or in lieu of original document. Camera operated by the Bechtel group of companies.
Operator Danny 10-20-81 Camera Type MRC I

This drawing and the design it covers are the property of BECHTEL. They are merely loned and on the borrower's express agreement that they will not be reproduced, copied, loaned, exhibited, nor used except in the limited way and private use permitted by any written consent given by the lender to the borrower.

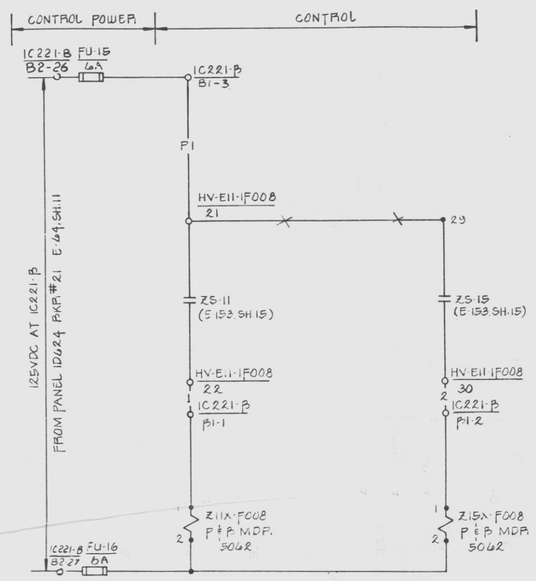

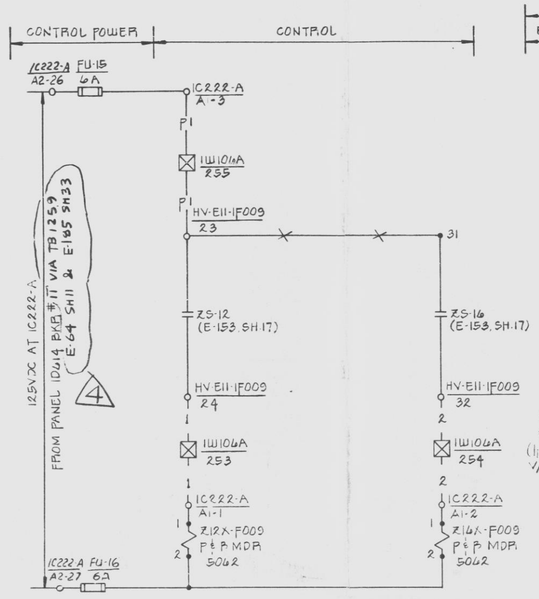

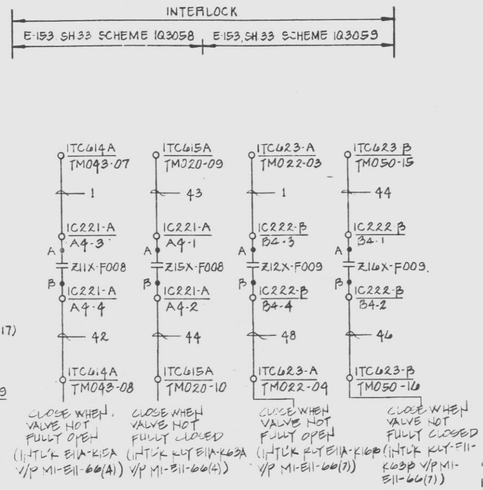

RELAY TABULATION (SEE NOTE 2)				
RELAY NO.	COIL/RELAY LEAD SEPARATION			
	COIL		CONTACT	
	DIV	LOC	DIV	LOC
Z11X-F008	II	1C221-B	I	1C221-A
Z15X-F008	II	1C221-B	I	1C221-A
Z12X-F009	I	1C222-A	II	1C222-B
Z16X-F009	I	1C222-A	II	1C222-B

NOTES:

1. FOR STANDARD SYMBOLS FOR ELECTRICAL DIAGRAMS SEE 8856-E-42.
2. INSTALLATION AND WIRING OF MDR POTTER BRUMFIELD RELAYS SHALL BE DONE IN ACCORDANCE WITH SEPARATION REQUIREMENTS BETWEEN DIVISIONS COIL & CONTACT LEADS OF MDR RELAYS ARE LOCATED IN DEFFERENT SECTIONS OF PANEL AS SHOWN IN THE RELAY TABULATION.

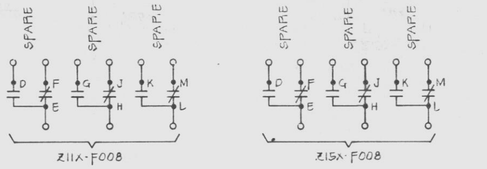

RHR LOGIC DIV II / DIV I ISOLATION II
SCHEME NO. 1Q7055

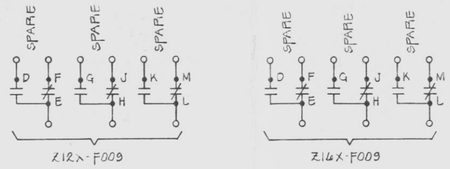

RHR LOGIC DIV I / DIV II ISOLATION I
SCHEME NO. 1Q7056

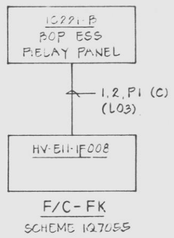

F/C-FK
SCHEME 1Q7055

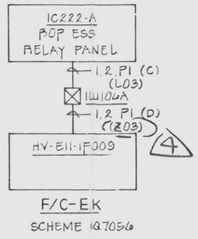

F/C-EK
SCHEME 1Q7056

PRC APERTURE CARD

Docket #50-387
Control #8303220117-98
Date 3/10/83 of Document:
REGULATORY DOCKET FILE

THIS DOCUMENT IS UNDER PP&L ADMINISTRATIVE CONTROL. NO CHANGES CAN BE MADE WITHOUT PRIOR PP&L APPROVAL

D

REFERENCE DWG'S.	
BECHTEL NO.	PL. NO.
E-42	A-107191
E-64	D-107213
E-153	D-107302
MI-E11-66	FF124510

No.	DATE	REVISIONS	BY	CHK	DESIGN SUPV	ENG	PROJ ENGR	APP'D
5	7/19/82	ISSUED AS BUILT/ NCR# FCN-E-3198 REVD PWR DESCRIP LOGIC 42	CJN	RCA				
4	9/1/81	INCORPORATE LDG MARK-UPS, REF DWG 5 YEL DCR #42 FOR RBS	EPK					
3	1/15/81	REVISED PER SCR 1767	RCA					
2	5/14/79	ADDED TERMINAL NO'S						
1	7/6/78	ISSUED FOR CONSTRUCTION	MPS					

SCALE — DESIGNED J. WONG DRAWN MPSANTOS

PENNSYLVANIA POWER & LIGHT COMPANY
ALLENTOWN, PENNSYLVANIA
SUSQUEHANNA STEAM ELECTRIC STATION — UNIT 1, UNIT 2

BECHTEL — SAN FRANCISCO

SCHEMATIC DIAGRAM
DIV I / DIV II ISOLATION RHR SYSTEM
UNIT 1

JOB No.	DRAWING No.	REV.
8856	E-185 SH 42	4

D-107334 SH 42

UNCONTROLLED DOCUMENT FOR REFERENCE ONLY

G I P 3 5 D I V I / D I V II I S O A H A S T Y S W

4/76, D P ARMWRIGHT NO. 3183-W005

22 X 34 "D" SIZE

This drawing and the design it covers are the property of BECHTEL. They are merely loaned and on the borrower's express agreement that they will not be reproduced, copied, loaned, exhibited, nor used except in the limited way and private use permitted by any written consent given by the lender to the borrower.

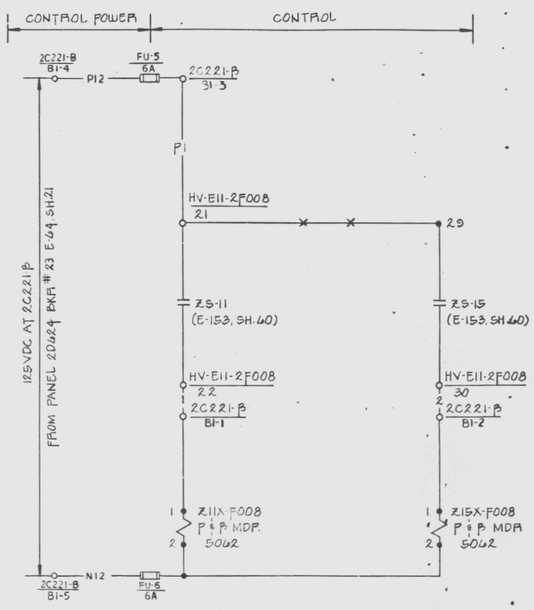

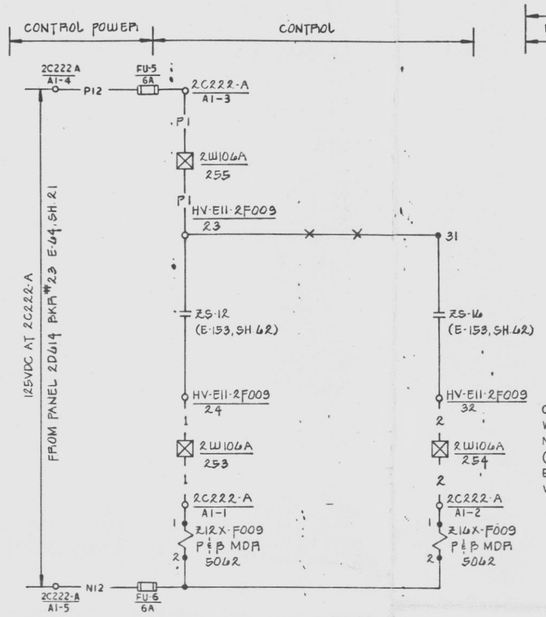

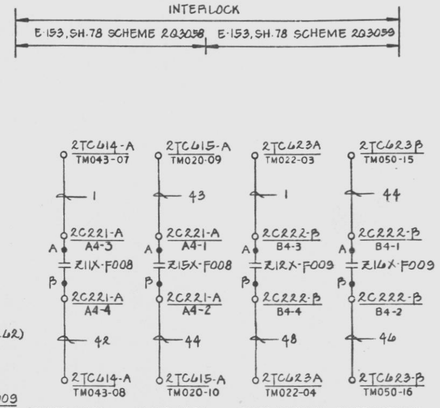

RELAY TABULATION (SEE NOTE 2)				
RELAY NO.	COIL/RELAY LEAD SEPARATION			
	COIL		CONTACT	
	DIV	LOC	DIV	LOC
Z11X-F008	II	2C221-B	I	2C221-A
Z15X-F008	II	2C221-B	I	2C221-A
Z12X-F009	I	2C222-A	II	2C222-B
Z16X-F009	I	2C222-A	II	2C222-B

NOTES:

1. FOR STANDARD SYMBOLS FOR ELECTRICAL DIAGRAMS SEE 8856-E-42.
2. INSTALLATION AND WIRING OF MDR POTTER BRUMFIELD RELAYS SHALL BE DONE IN ACCORDANCE WITH SEPARATION REQUIREMENTS BETWEEN DIVISIONS. COIL & CONTACT LEADS OF MDR RELAYS ARE LOCATED IN DEFFERENT SECTIONS OF PANEL AS SHOWN IN THE RELAY TABULATION.

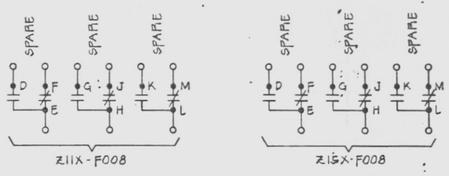

RHR LOGIC DIV II / DIV I ISOLATION II

SCHEME NO 2Q7055

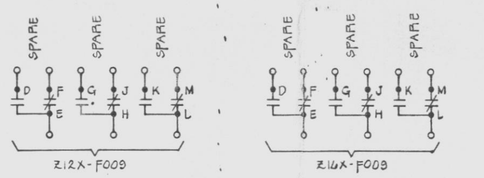

RHR LOGIC DIV I / DIV II ISOLATION I

SCHEME NO 2Q7056

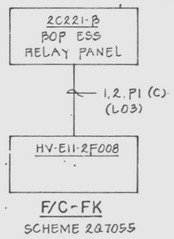

SCHEME 2Q7055

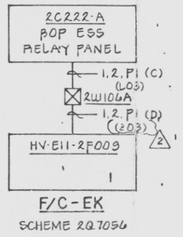

SCHEME 2Q7056

REFERENCE DWG'S.	
BECHTEL NO.	PL. NO.
E-42	A-107131
E-64	D-107213
E-153	D-107302

NO.	DATE	REVISIONS	BY	CHK	DESIGN SUPV	ENG M	PROJ ENGR	APP'D
3	9/6/83	REV TO INCORP FCN E-3382	JK	JW	JW	BMS
2	12/28/81	REVISED AS PER DCP 505 RVD (FOI MOBL-20). & SFR 1769	PC	WH	JW	CMS
1	5/14/81	ISSUED FOR CONSTRUCTION	MPS	JW	JW	LK

SCALE NONE | DESIGNED J. WONG | DRAWN MPSANTOS

PENNSYLVANIA POWER & LIGHT COMPANY

ALLENTOWN, PENNSYLVANIA

SUSQUEHANNA STEAM ELECTRIC STATION – UNIT 1, UNIT 2

BECHTEL -- SAN FRANCISCO

SCHEMATIC DIAGRAM
DIV I / DIV II ISOLATION RHR SYSTEM
UNIT 2

JOB No.	DRAWING No.	REV.
8856	E-185 SH 43	2

D-107334 SH 43

G2P35 DIV I/DIV II ISO RHR SYS W

Docket #50-387
Control # 8303220117-99
Date 3/10/83 of Document:
REGULATORY DOCKET FILE

PRC APERTURE CARD

UNCONTROLLED DOCUMENT
FOR REFERENCE ONLY

D

24X
P.C. Akins 10-1-82 MRC I

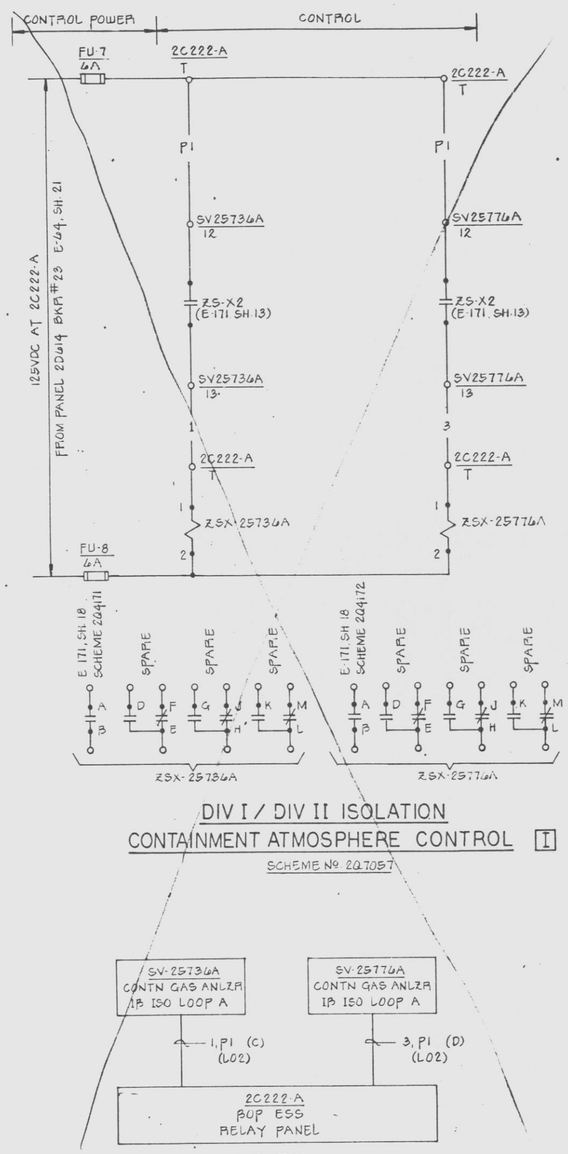

DIV I / DIV II ISOLATION
CONTAINMENT ATMOSPHERE CONTROL [I]
SCHEME No 2Q7057

F/C-EK
SCHEME 2Q7057

RELAY TABULATION (SEE NOTE 2)				
RELAY NO.	COIL/RELAY LEAD SEPARATION			
	COIL		CONTACT	
	DIV	LOC	DIV	LOC
ZSX-25736A	I	2C222-A	II	2C222-B
ZSX-25776A	I	2C222-A	II	2C222-B

ALL RELAYS ARE P & B MDR 5062

NOTES:

1. FOR STANDARD SYMBOLS FOR ELECTRICAL DIAGRAMS SEE DWG 8856-E-42.
2. INSTALLATION AND WIRING OF MDR POTTER BRUMFIELD RELAYS SHALL BE DONE IN ACCORDANCE WITH SEPARATION REQUIREMENTS BETWEEN DIFFERENT DIVISIONS. COIL & CONTACT LEADS OF MDR RELAYS ARE LOCATED IN DIFFERENT SECTIONS OF PANEL AS SHOWN IN THE RELAY TABULATION.

PRC APERTURE CARD

Docket # 50-387
Control # 8303220117-100
Date 3/10/83 of Document:
REGULATORY DOCKET FILE

D

REFERENCE DWG'S.	
BECHTEL NO.	PL. NO.
E-42	D-107191
E-64	D-107213
E-171	D-107320

VOID

No.	DATE	REVISIONS	BY	CHK	DESIGN SUPV	ENG	PROJ ENGR	APP'S
1	1/18/82	ISSUED FOR CANCELLATION (D-R42)	NG	TN	[illegible]	[illegible]	[illegible]	
0	5/16/79	ISSUED FOR CONSTRUCTION	MPS	[illegible]	[illegible]	[illegible]	[illegible]	

SCALE [illegible] DESIGNED C.S. HOU DRAWN MPS ANTOS

PENNSYLVANIA POWER & LIGHT COMPANY
ALLENTOWN, PENNSYLVANIA
SUSQUEHANNA STEAM ELECTRIC STATION – UNIT 1, UNIT 2

BECHTEL – SAN FRANCISCO

SCHEMATIC DIAGRAM
DIV I/DIV II ISOLATION
CONTAINMENT ATMOSPHERE CONTROL UNIT 2

JOB No.	DRAWING No.	REV.
8856	E-185 SH 45	1

D-107334 SH45

UNCONTROLLED DOCUMENT FOR REFERENCE ONLY

G2P35 DIV. I/DIV II ISO CONTN ATMOS W

22 X 34 "D" SIZE

This drawing and the design it covers are the property of BECHTEL. They are merely loaned and on the borrower's express agreement that they will not be reproduced, copied, loaned, exhibited, nor used except in the limited way and private use permitted by any written consent given by the lender to the borrower.

4/76 D P ARKWRIGHT NO 2102-W005

24X

This drawing and the design it covers are the property of BECHTEL. They are merely loaned and on the borrower's express agreement that they will not be reproduced, copied, loaned, exhibited, nor used except in the limited way and private use permitted by any written consent given by the lender to the borrower.

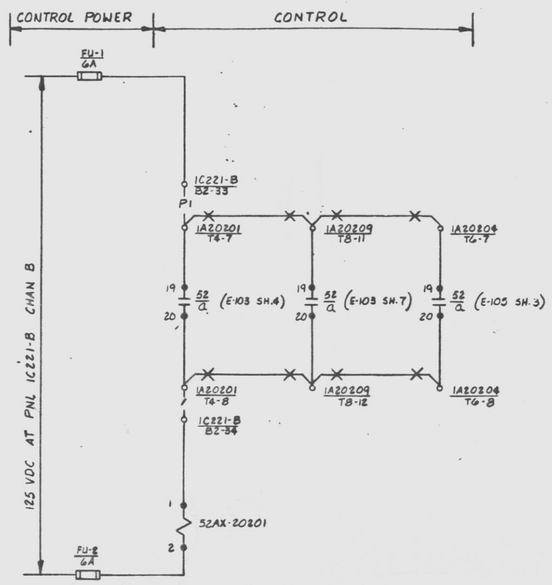

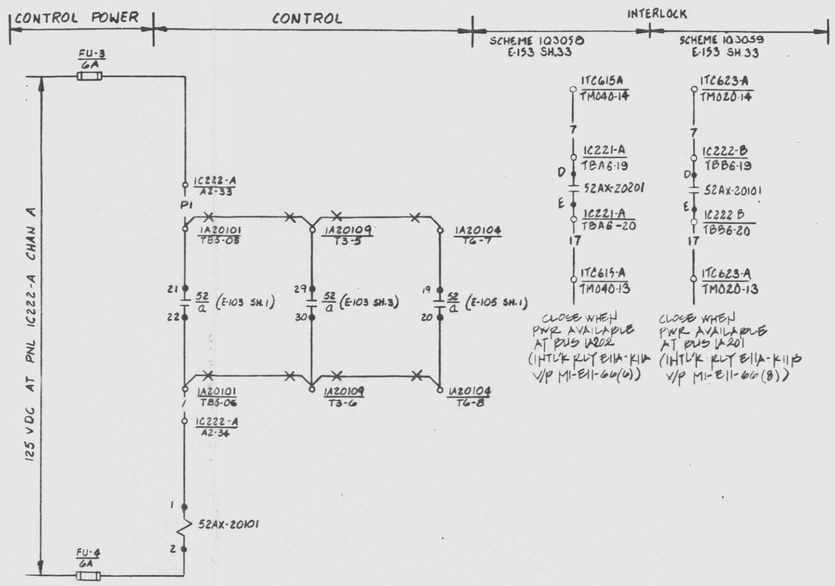

RELAY TABULATION (SEE NOTE 2.)				
RELAY No.	COIL/RELAY LEAD SEPARATION			
	COIL		CONTACT	
	.CHAN	LOC	DIV	LOC
52AX-20101	A	1C 222-A	II	1C 222-B
52AX-20201	B	1C 221-B	I	1C 221-A

ALL RELAYS ARE P & B MDR5062

NOTES:

1. FOR STANDARD SYMBOLS FOR ELECTRICAL DIAGRAMS SEE DWG 8856-E-42.
2. INSTALLATION AND WIRING OF MDR POTTER BRUMFIELD RELAYS SHALL BE DONE IN ACCORDANCE WITH SEPARATION REQUIREMENTS BETWEEN DIFFERENT CHANNELS/DIVISIONS. COIL & CONTACT LEADS OF MDR RELAYS ARE LOCATED IN DIFFERENT SECTIONS OF PANEL AS SHOWN IN THE RELAY TABULATION.

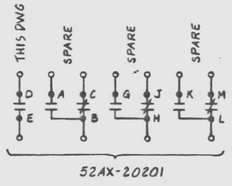

CHAN B / DIV I ISOLATION
RHR SYS [B]
SCHEME NO 1Q7060

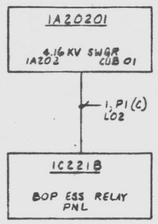

F/C BK

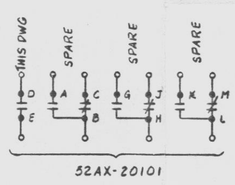

CHAN A / DIV II ISOLATION
RHR SYS [A]
SCHEME NO 1Q7061

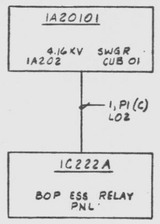

F/C AK

REFERENCE DWG'S.	
BECHTEL NO.	PL NO.
E-42	A-107191
E-103	D-107252
E-105	D-107254
M1-E11-66	FF1Z4510

PRC APERTURE CARD

NO.	DATE	REVISIONS	BY	CHK	ENG	APP'D
5	7/24/84	BF1B 014 (WAPG 33) WAS INCORP ON REV. 0	TC	RR	TC	
4	7/5/84	BF1B16 (WA S-95) WAS INCORPORATED ON REV 0.	RS	RR	PSC	
3	7/11/83	ADDED INTERLOCK CIRCUIT PER DCR 42 INCORPORATED DETAILS & DCR #3	BJR			
2	7/13/83	REVISED TERMINAL BOARD & TERMINAL TITLES (DCR 42)	KR	RR		
1	3/18/83	ISSUED FOR CONSTRUCTION	SCJ			

SCALE NONE | DESIGNED V SCHEMBRI | DRAWN J. JOHNSON

PENNSYLVANIA POWER & LIGHT COMPANY
ALLENTOWN, PENNSYLVANIA
SUSQUEHANNA STEAM ELECTRIC STATION – UNIT 1, UNIT 2

BECHTEL – SAN FRANCISCO

SCHEMATIC DIAGRAM
ISOLATION CIRCUITS RHR SYS UNIT 1

JOB No.	DRAWING No.	REV.
8856	E185 SH. 46	4

D-107334 SH. 46

Docket # 50-387
Control # 8303220117-101
Date 3/10/83 of Document:
REGULATORY DOCKET FILE

UNCONTROLLED DOCUMENT FOR REFERENCE ONLY

GIP35 ISO CKTS RHR SYS W

10/77 D/F ARKWRIGHT NO. 3102-W005

24X
I certify that the microfilmed image contained on this microform was made in the normal and regular course of business. This is a true, full, correct and complete reproduction and replacement for and/or in lieu of original documents produced by the Bechtel group of companies.
Signature of Camera Operator Danny Date 10-26-81 Camera Type MRG I

D

This drawing and the design it covers are the property of BECHTEL. They are merely loaned and on the borrower's express agreement that they will not be reproduced, copied, loaned, exhibited, nor used except in the limited way and private use permitted by any written consent given by the lender to the borrower.

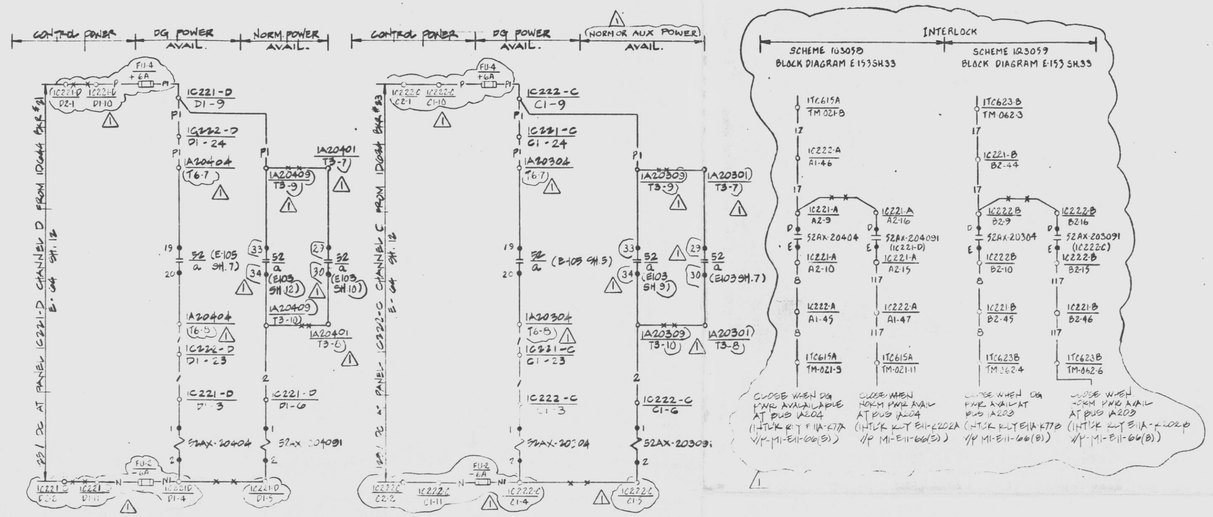

This drawing and the design it covers are the property of BECHTEL. They are merely loaned and on the borrower's express agreement that they will not be reproduced, copied, loaned, exhibited, nor used except in the limited way and purpose was permitted by any written consent given by the lender to the borrower.

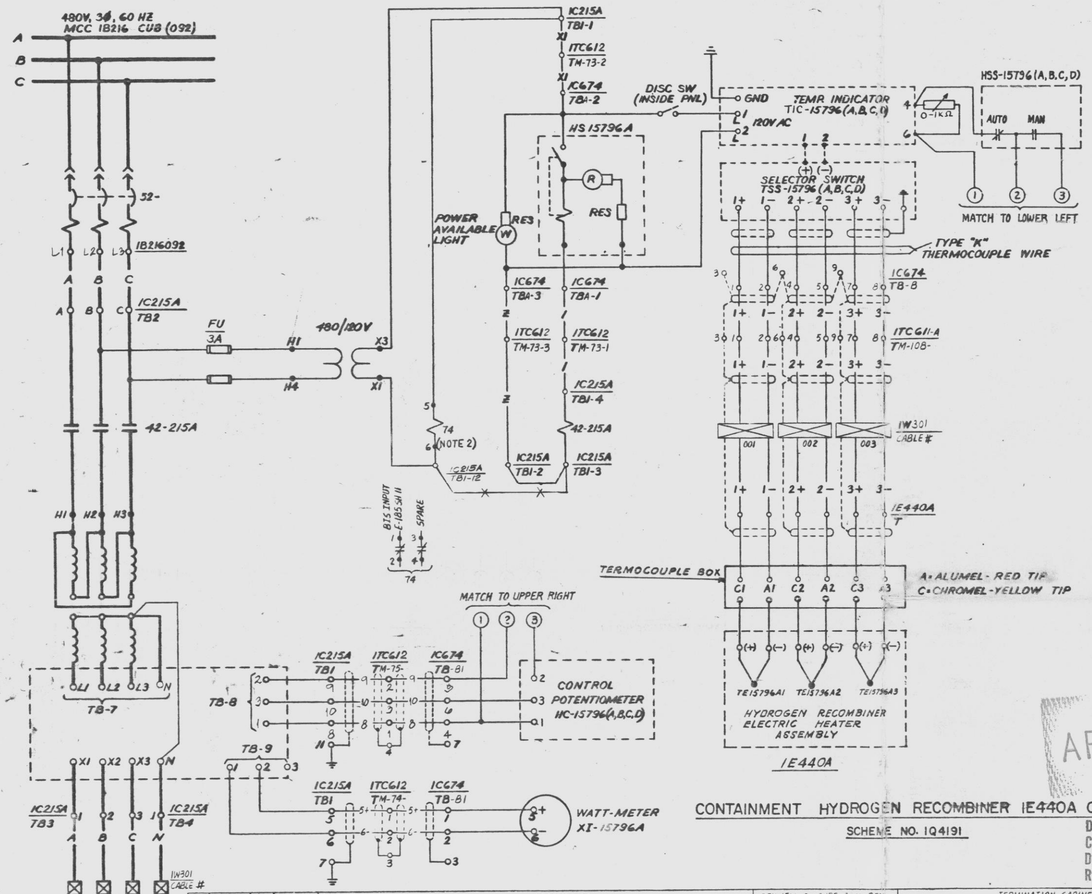

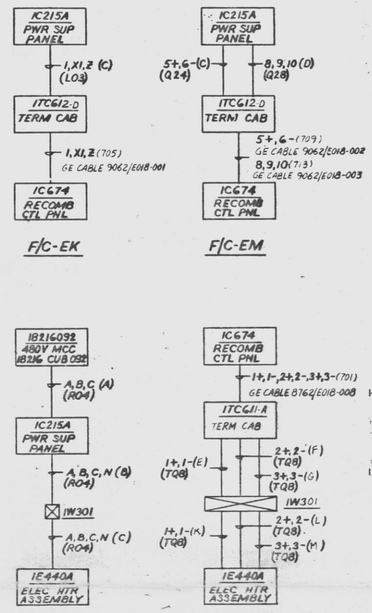

UNCONTROLLED DOCUMENT FOR REFERENCE ONLY

NOTES:
1. FOR STANDARD SYMBOLS FOR ELECTRICAL DIAGRAMS SEE DWG. 8856-E-42.
2. FIELD TO PURCHASE AND INSTALL 74 RELAYS FOR EACH PANEL. RELAYS SHALL BE CUTLER-HAMMER CAT. Nº D26MR02A OR EQUAL. SEE DWG. 8856-E-40 SH 5a.
3. CABLES N,P,Q,R,S,&T WILL BE CONNECTED TO THE SAME TERMINALS AS CABLES E,F,G,K,L,&M AT ITC611A & IE440A DURING PHASE 2 (PCP 272.2) WHEN PHASE 1 CABLES E,F,G,K L&M ARE DISCONNECTED.
4. CABLES U,W,X,Y,&Z WILL BE CONNECTED TO THE SAME TERMINAL A, CABLES E,F,G,K,L&M AT ITC622E & IE440B DURING PHASE 2(PCP 272.2) WHEN PHASE 1 CABLES E,F,G,K L&M ARE DISCONNECTED.

REFERENCE DWG'S.	
BECHTEL NO.	PL NO.
J-600	E-103340
M-1207	E-106202
E-42	A-107191

PRC APERTURE CARD

CONTAINMENT HYDROGEN RECOMBINER IE440A CONTROL

SCHEME NO. 104191

Docket # 50-387
Control # 8303220117-10
Date 3/10/83 of Document:
REGULATORY DOCKET FILE

DIV NO.	SCHEME NO.	F/C	480V POWER SUPPLY	ELEC HTR ASSY LOC	RECOMBINER POWER SUPPLY PANEL NO.	TB NO.	TERM NOS.	RECOMBINER CONTROL PANEL NO.	TB NO.	TERM NOS.	DRYWELL & SUPP POOL PEN 480V POWER	CABLE NO.	INSTR	CABLE NO.	TERMINATION CABINET LINE CODE	NO.-SEC	T-MOD NO.	TERM MOD POINTS	CABLE NO.	BIS INPUT	TEMP ELEMENTS
I	104191	EK	1B216092	1E440A	IC215A	TBI	1 2 3 4 5 6 7 8 9 10 11 12	IC674	TB-A	1 2 3 4 5 6 7	1W30	263	1W301	1	705		73	1 2 3 4 7	9062/E018-001	E-185 SH.11	1T596 A1
		EP				TB2	A B C		TB-B	1 2 3 4 5 6 7 8 9 10 11 12		264		2	709	ITC612-D	74	1 2 3	9062/E018-002		1T596 A2
		EM				TB3	1 2 3		TB-B1	1 2 3 4 5 6 7 8		265		3	113		75	1 2 3 4	9062/E018-003		1T596 A3
		NM				TB4	1					266			701	ITC611-A	108	1 2 3 4 5 6 7 8 9 10 11 12	8762/E018-008		
II	104192	FK	1B226103	1E440B	IC215B	TBI	1 2 3 4 5 6 7 8 9 10 11 12	IC675	TB-A	1 2 3 4 5 6 7	1W30	261	1W301	5	706		44	1 2 3 4 7	8963/E018-001	E-185 SH.12	1T596 B1
		FP				TB2	A B C		TB-B	1 2 3 4 5 6 7 8 9 10 11 12		262		6	710	ITC622-D	45	1 2 3	8963/E018-002		1T596 B2
		FM				TB3	1 2 3		TB-B1	1 2 3 4 5 6 7 8		263		7	714		46	1 2 3 4	8963/E018-003		1T596 B3
		NM				TB4	1					264			702	ITC622-E	61	1 2 3 4 5 6 7 8 9 10 11 12	8963/E018-008		
I	104193	EK	1B236103	1E440C	IC215C	TBI	1 2 3 4 5 6 7 8 9 10 11 12	IC674	TB-C	1 2 3 4 5 6 7	1W10	185	1W103A	36	717		105	1 2 3 4 5 6 7	9062/E018-005	E-185 SH.11	1T596 C1
		EP				TB2	A B C		TB-D	1 2 3 4 5 6 7 8 9 10 11 12		186		37	718	ITC612-D	09	1 2 3	9062/E018-009		1T596 C2
		EM				TB3	1 2 3		TB-D1	1 2 3 4 5 6 7 8		187		38	719		107	1 2 3 4	9062/E018-007		1T596 C3
		NM				TB4	1					180			720	ITC611-A	106	1 2 3 4 5 6 7 8 9 10 11 12	8762/E018-006		
II	104194	FK	1B246033	1E440D	IC215D	TBI	1 2 3 4 5 6 7 8 9 10 11 12	IC675	TB-C	1 2 3 4 5 6 7	1W10	185	1W103B	36	721		58	1 2 3 4 5 6 7	8963/E018-005	E-185 SH.12	1T596 D1
		FP				TB2	A B C		TB-D	1 2 3 4 5 6 7 8 9 10 11 12		186		37	722	ITC622-D	62	1 2 3	8963/E018-009		1T596 D2
		FM				TB3	1 2 3		TB-D1	1 2 3 4 5 6 7 8		187		38	723		60	1 2 3 4	8963/E018-007		1T596 D3
		NM				TB4	1					188			724	ITC622-E	59	1 2 3 4 5 6 7 8 9 10	8963/E018-006		

THIS DOCUMENT IS UNDER PP&L ADMINISTRATIVE CONTROL. NO CHANGES CAN BE MADE WITHOUT PRIOR PP&L APPROVAL.

COMMONWEALTH OF PENNSYLVANIA REGISTERED PROFESSIONAL EDWARD K. KANG 17304 E

MARK	DATE	DESCRIPTION	DRAWN	CHK'D	ENG'G	SUPV	PROJ ENGR	MGR
3	7/11/83	DELETE REFERENCE TO FCR E-2759 PER ECN-9771	TJK	MB	PAK	/	DJH	
2	7/1/83	ISSUED AS BUILT	SJ	ARA	RT	/	DJH	
1	3/31/83	REV TO INCORP FCR E-10351	RS	ARA	PK	/	DJH	
0	3/1/83	REVISED TO INCORP FCR E-10085	RS	CJN	PK	/	DJH	
	2/1/83	ISSUED FOR CONSTRUCTION	WR	WB	RT	/	DJH	
DES.	CHK'D	REVISIONS	BY	CHK'D	SUPV	ENG'G	PROJ ENGR	MGR

SCALE: NONE | DRAWING NO. SHEET | CAL/ORD | UNIT W

PENNSYLVANIA POWER & LIGHT COMPANY
ALLENTOWN, PENNSYLVANIA
SUSQUEHANNA STEAM ELECTRIC STATION – UNIT 1, UNIT 2
BECHTEL – SAN FRANCISCO

SCHEMATIC DIAGRAM CONTAINMENT HYDROGEN RECOMBINER CONTROL UNIT 1

APPD	DRAWING No.	REV.
	E-187 SH 1	11
	D-107336 SH 1	

GIKIS SCHEM CNT

24X

I certify that the microfilmed image contained on this microform were made in the normal and regular course of business. This is a true, full, correct and complete reproduction and replacement for and/or in lieu of original documents generated by the Bechtel group of companies.
Signed JACINTO Date 6-14-83 Camera Type MRO 1
Camera Operator

D

This drawing and the design it covers are the property of BECHTEL. They are loaned and on the borrower's express agreement that they will not be reproduced, copied, loaned, exhibited, or used except in the bidding by and performance of work by the borrower.

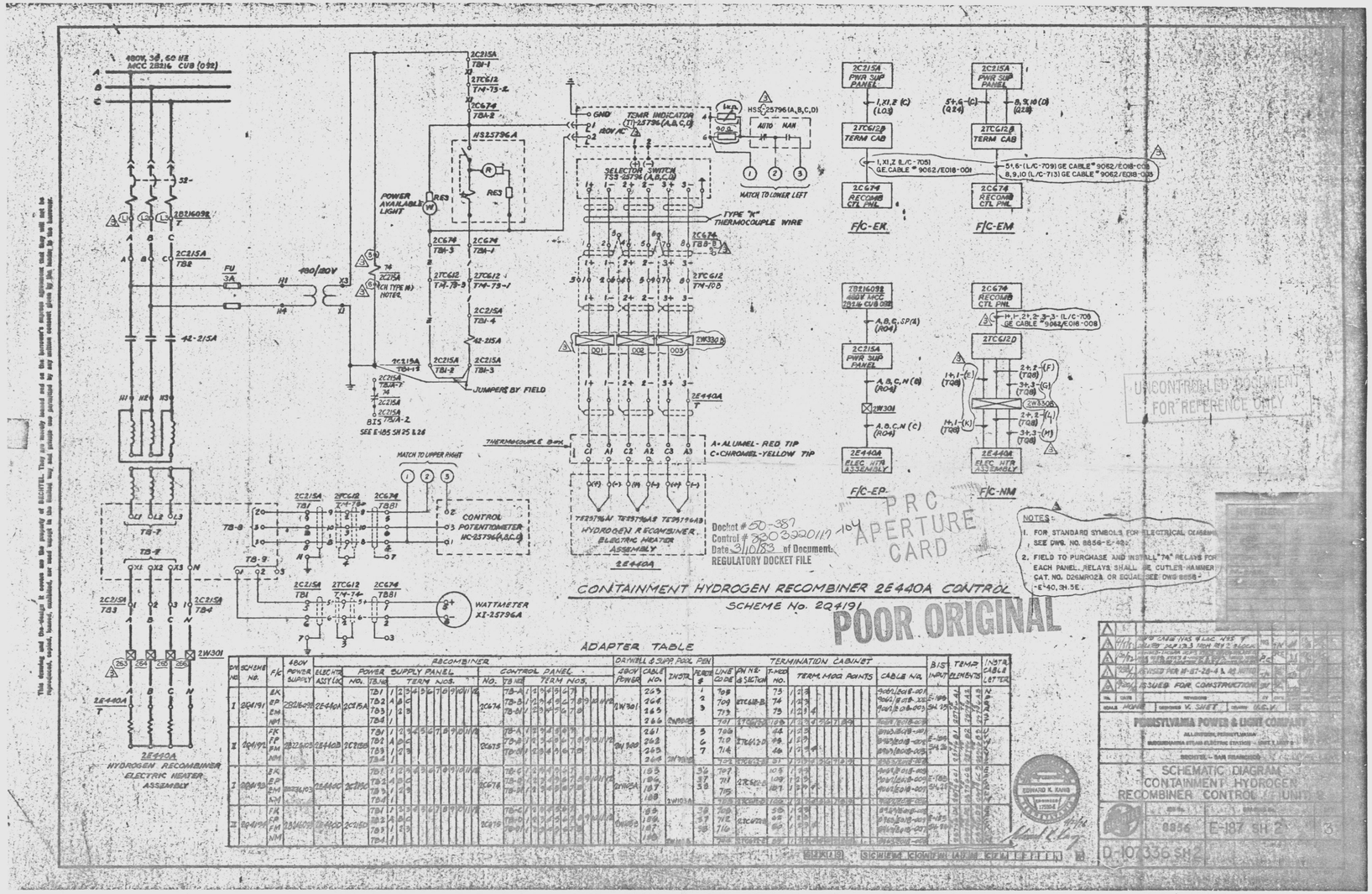

ADAPTER TABLE

DWG NO.	SCHEME NO.	F/C	480V POWER SUPPLY	RECOMBINER: ELEC HTR ASSY (2E)	POWER SUPPLY PANEL: NO.	TB NO.	TERM NOS.	CONTROL PANEL: NO.	TB NO.	TERM NOS.	DRYWELL & SUPP POOL PEN: 480V POWER	CABLE NO.	INSTR.	TERMINATION CABINET: PENETR #	LINE CODE	PN NO. & SECTION	T-MOD NO.	TERM. MOD POINTS	CABLE NO.	BIST INPUT	TEMP ELEMENTS	INSTR CABLE & CT TER.
I	2Q4191	EK EP EM NM	2B216092	2E440A	2C215A	TB1 TB2 TB3 TB4	1 2 3 4 5 6 7 8 9 10 11 12 A B C 1 2	2C674	TB-A TB-B TB-C TB-D	1 2 3 4 5 6 7 8 9 10 11 12	2W301	263 264 265 266		1 2 3	708 709 713	ETC612-B	73 74 75	1 2 3 1 2 3 4	9062/E018-009 9062/E018-010 9062/E018-013	1-198 2-198	3H 1B	N
II	2Q4191	FK FP FM NM	2B216093	2E440B	2C215B	TB1 TB2 TB3 TB4	1 2 3 4 5 6 7 8 9 10 11 12 A B C 1 2	2C675	TB-A TB-B TB-C TB-D	1 2 3 4 5 6 7 8 9 10 11 12	2W300	261 262 263 264	2W300	5 6 7	710 711 714	2TC612-D	68 98 46	1 2 3 1 2 3 4	9062/E018-011 9062/E018-012 9062/E018-015	1-198 2-198	3H 1B	N
I	2Q4192	EK EP EM NM	2B216093	2E440C	2C215C	TB1 TB2 TB3 TB4	1 2 3 4 5 6 7 8 9 10 11 12 A B C 1 2	2C676	TB-C TB-D TB-A TB-B	1 2 3 4 5 6 7 8 9 10 11 12	2W301A	185 186 187 188	2W301A	32 37 38	707 711 715	2TC612-C	105 109 107	1 2 3 1 2 3 4	9062/E018-005 9062/E018-006 9062/E018-007	1-198 2-198	3H 1B	N
II	2Q4192	FK FP FM NM	2B216093	2E440D	2C215D	TB1 TB2 TB3 TB4	1 2 3 4 5 6 7 8 9 10 11 12 A B C 1 2	2C676	TB-C TB-D TB-A TB-B	1 2 3 4 5 6 7 8 9 10 11 12	2W300A	189 190 191 192	2W300A	38 37 39	708 712 716	2TC612-D	56 68 69	1 2 3 1 2 3 4	9062/E018-011 9062/E018-012 9062/E018-015	1-198 2-198	3H 1B	N

24X

I certify that the microfilmed image contained on this microform were made in the normal and regular course of business. This is a true, full, correct and complete reproduction and replacement for and/or in lieu of original documents generated by the Bechtel group of companies.
Signed DANNY Camera Operator Date 4-19-82 Camera Type MRC 1

D

This drawing and the design it covers are the property of BECHTEL. They are merely loaned and on the borrower's express agreement that they will not be reproduced, copied, loaned, exhibited, nor used except in the limited way and private use permitted by any written consent given by the lender to the borrower.

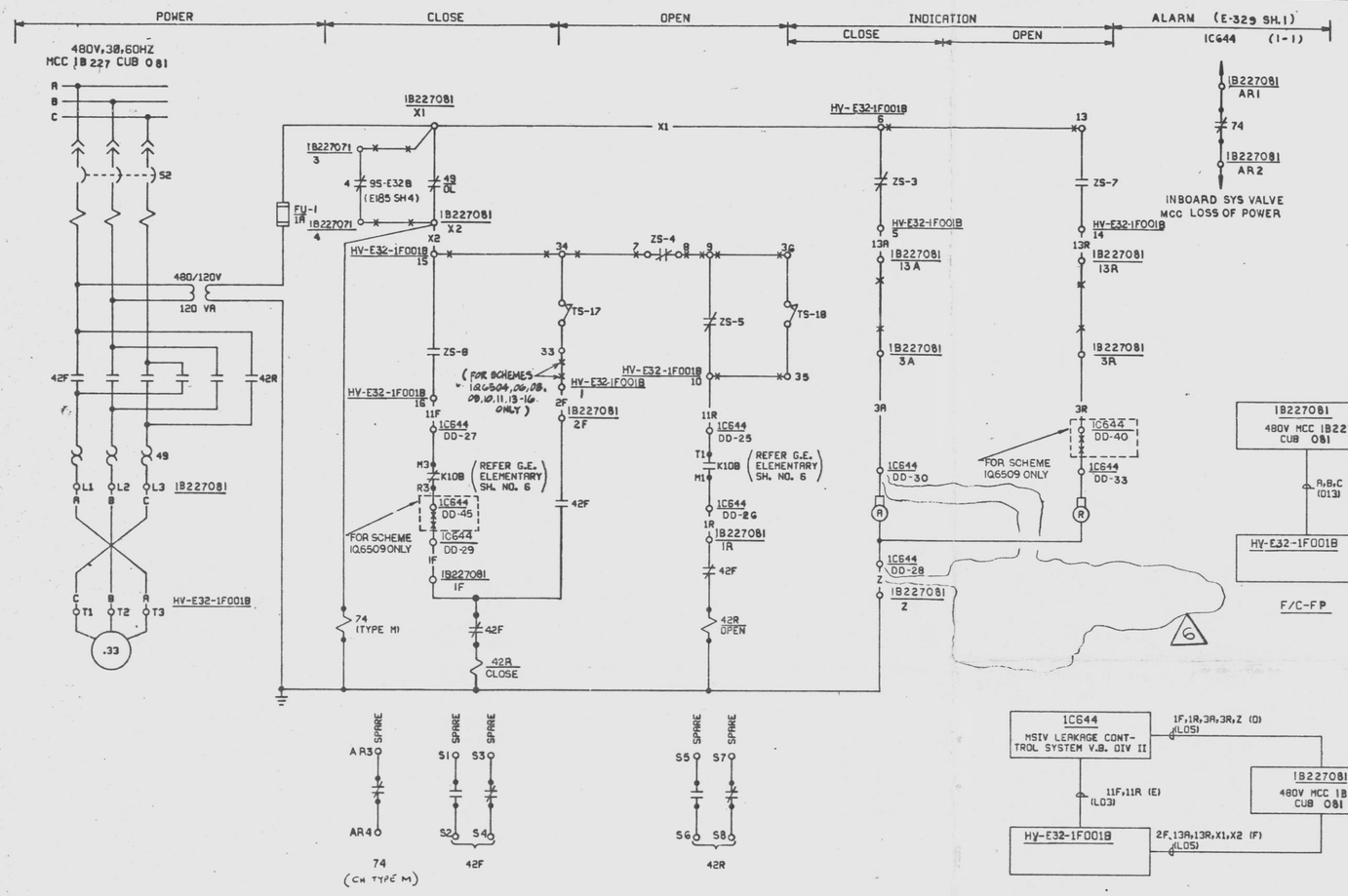

VALVE LIMIT SWITCH DEVELOPMENT

CONTACTS		100% OPEN	INTERMEDIATE	100% CLOSED	CONTACT USED
ZS-1	1Ø-11-Ø1				SPARE
ZS-2	2Ø-11-Ø4				SPARE
ZS-3	3Ø-11-Ø6				THIS SH
ZS-4	7Ø-11-Ø8				THIS SH
ZS-5	9Ø-11-Ø10				THIS SH
ZS-6	11Ø-11-Ø12				E-189 SH 6
ZS-7	13Ø-11-Ø14				THIS SH
ZS-8	15Ø-11-Ø16				THIS SH
ZS-9	17Ø-11-Ø18				SPARE
ZS-10	19Ø-11-Ø20				
ZS-11	21Ø-11-Ø22				
ZS-12	23Ø-11-Ø24				
ZS-13	25Ø-11-Ø26				
ZS-14	27Ø-11-Ø28				
ZS-15	29Ø-11-Ø30				
ZS-16	31Ø-11-Ø32				
TS-17	33-or-3-34	OPEN ON HIGH CLOSING TORQUE			THIS SH
TS-18	35-or-3-36	OPEN ON HIGH OPENING TORQUE			THIS SH
CONTACT CLOSED					

MOTOR OPERATED VALVE : SEE TABLE

NOTES:

1. FOR STANDARD SYMBOLS FOR ELECTRICAL DWGS. SEE E-42
2. ALL DEVICE NUMBERS TO BE SUFFIXED BY STARTER LOCATION NUMBER UNLESS OTHERWISE NOTED
3. DESIGN BASED ON GE-APED ELEMENTARY 851E708AE (8856-M1-E32-2
4. FOR SPACE HEATER SEE E 24H SH 4

PRC APERTURE CARD

MSIV LEAKAGE CONTROL INBOARD SYSTEM VLV HV-E32-1F001B II

SCHEME NO 1Q6501
REFER SH. NO. 6

F/C-FK

F/C	SCHEME NO	MOTOR OPERATED VALVE NO	MOTOR OPERATED VALVE DESCRIPTION	HP	STARTER LOCATION	ESS DIV	INTERLOCK RLY NO	INTERLOCK TEST SW	INTERLOCK LOC	INTERLOCK BYPASS	INTERLOCK LOC	TERMINAL NO'S MSIV LEAKAGE CONTROL SYSTEM VB								MCC O/L BYPASS	
FK/FP	1Q6501	HV-E32-1F001B	INBOARD SYSTEM VALVE	0.33	1B227081	II	K10B	HS6-3901B	1C644	95-E32B (4)	1B227071	DD-25	DD-26	DD-27	DD-28	DD-33	DD-30	DD 29	3	4
FK/FP	1Q6502	HV-E32-1F001F	INBOARD SYSTEM VALVE	0.33	1B227091	II	K10F	HS6-3901F		95-E32F (4)		DD-47	DD-48	DD-49	DD-50	DD-52	DD-53	DD-51	21	22
FK/FP	1Q6503	HV-E32-1F001K	INBOARD SYSTEM VALVE	0.33	1B226111	II	K10K	HS6-3901K		95-E32K (4)	1B226101	DD-71	DD-72	DD-73	DD-74	DD-79	DD-76	DD-75	3	4
FK/FP	1Q6504	HV-E32-1F001P	INBOARD SYSTEM VALVE	0.33	1B226121	II	K10P	HS6-3901P		95-E32P (4)		DD-95	DD-96	DD-97	DD-98	DD-103	DD-100	DD-99	21	22
FK/FP	1Q6505	HV-E32-1F002B	INBOARD SYSTEM VALVE	0.33	1B227082	II	K11B	HS6-3901B		95-E32B (5)	1B227071	BB-28	BB-29	BB-30	BB-31	BB-34	BB-33	BB-32	11	12
FK/FP	1Q6506	HV-E32-1F002F	INBOARD SYSTEM VALVE	0.33	1B227092	II	K11F	HS6-3901F		95-E32F (5)		BB-35	BB-36	BB-37	BB-38	BB-41	BB-40	BB-39	29	30
FK/FP	1Q6507	HV-E32-1F002K	INBOARD SYSTEM VALVE	0.33	1B226112	II	K11K	HS6-3901K		95-E32K (5)	1B226101	BB-42	BB-43	BB-44	BB-45	BB-48	BB-47	BB-46	11	12
FK/FP	1Q6508	HV-E32-1F002P	INBOARD SYSTEM VALVE	0.33	1B226122	II	K11P	HS6-3901P		95-E32P (5)		BB-49	BB-50	BB-51	BB-52	BB-55	BB-54	BB-53	29	30
FK/FP	1Q6509	HV-E32-1F003B	FLOW XMTR BYPASS VALVE	0.33	1B227083	II	K12B	HS6-3903B		95-E32B (6)	1B227071	DD-41	DD-42	DD-43	DD-44	DD-124	DD-46	DD-123	13	16
FK/FP	1Q6510	HV-E32-1F003F	FLOW XMTR BYPASS VALVE	0.33	1B227093	II	K12F	HS6-3903F		95-E32F (6)		DD-64	DD-65	DD-66	DD-67	DD-70	DD-69	DD-68	31	32
FK/FP	1Q6511	HV-E32-1F003K	FLOW XMTR BYPASS VALVE	0.33	1B226113	II	K12K	HS6-3903K		95-E32K (6)	1B226101	DD-88	DD-89	DD-90	DD-91	DD-94	DD-93	DD-92	13	16
FK/FP	1Q6512	HV-E32-1F003P	FLOW XMTR BYPASS VALVE	0.33	1B226123	II	K12P	HS6-3903P		95-E32P(3)		DD-111	DD-112	DD-113	DD-114	DD-117	DD-116	DD-115	31	32
EK/EP	1Q6513	HV-E32-1F006	OUTBOARD SYS BLEED VALVE	0.33	1B217091	I	K20	HS6-3906	1C645	95-E32 (4)	1B217081	AA-82	AA-83	AA-84	AA-85	AA-86	AA-87	AA-81	3	4
EK/EP	1Q6514	HV-E32-1F007	OUTBOARD SYS BLEED VALVE	0.33	1B217092	I	K21			95-E32 (5)		AA-38	AA-39	AA-40	AA-41	AA-42	AA-43	AA-44	11	12
EK/EP	1Q6515	HV-E32-1F008	OUTBOARD SYS DEPRESSURE VALVE	0.33	1B217093	I	K18	HS6-3908		95-E32 (6)		AA-91	AA-92	AA-93	AA-94	AA-95	AA-96	AA-90	13	14
EK/EP	1Q6516	HV-E32-1F009	OUTBOARD SYS DEPRESSURE VALVE	0.33	1B217094	I	K19			95-E32 (7)		AA-52	AA-53	AA-54	AA-55	AA-56	AA-57	AA-58	15	16

REFERENCE DWGS.	
BECHTEL NO.	PL NO.
E-42	A-107191
8856-M1-E32-2	FF127050
E-185	D-107334
E-329	D-107478

Docket #50-387
Control #8303220112 105
Date 3/10/83 of Document:
REGULATORY DOCKET FILE

UNCONTROLLED DOCUMENT FOR REFERENCE ONLY

No.	DATE	REVISIONS	BY	CHK'D	DESIGN SUPV	ENGR	PROJ ENGR	APP'D
6	11/7/84	REVISED TO INCORP DCN # 1 (SFR 2699)	LR	MS	TC	PS		
5	7/21/83	REVISED TERM. NO. AND INCORP PCR-E-2584, SCE-E-2679	KW	W	MS			
4	1/28/83	REVISED TO DELETE PCP 538 IE, REV 1 (SCE-E)	ONF	MS NPS	TC			
3	1/28/83	REVISED PER PCP 538 IE R-EV 1 SCE-E-1037A	KW	MS NPS	TC			
2	3/1/82	ISSUED FOR CONSTRUCTION	MPS	JC	MS			

SCALE: C-4 | DESIGNED: I.B./C.HOU | DRAWN | CHK'R ENGR

PENNSYLVANIA POWER & LIGHT COMPANY
ALLENTOWN, PENNSYLVANIA
SUSQUEHANNA STEAM ELECTRIC STATION – UNIT 1, UNIT 2

BECHTEL – SAN FRANCISCO

SCHEMATIC DIAGRAM
MSIV LEAKAGE CONTROL SYSTEM
INBOARD SYSTEM VALVE UNIT 1

JOB No.	DRAWING No.	REV.
8856	E-189 SH 1	6

D-107338 SH 1

24 X

DANNY 2-26-82 MRG 1

D

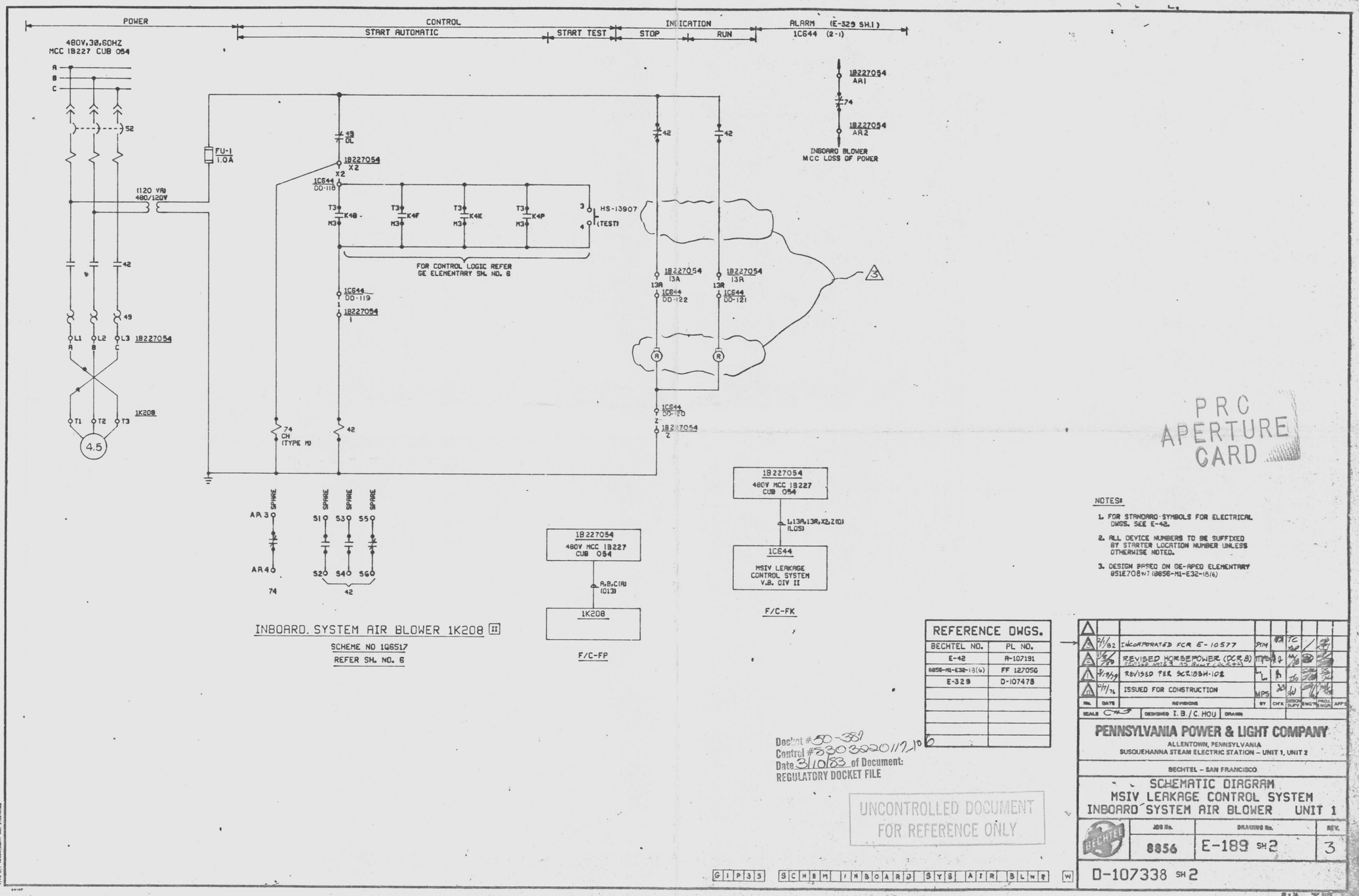

NOTES:

1. FOR STANDARD SYMBOLS FOR ELECTRICAL DWGS. SEE E-42.
2. ALL DEVICE NUMBERS TO BE SUFFIXED BY STARTER LOCATION NUMBER UNLESS OTHERWISE NOTED.
3. DESIGN BASED ON GE-APED ELEMENTARY 851E708WJ (8856-M1-E32-18(6)

REFERENCE DWGS.	
BECHTEL NO.	PL NO.
E-42	A-107191
8856-M1-E32-18(6)	FF 127050
E-329	D-107478

NO.	DATE	REVISIONS	BY	CHK	DESIGN SUPV	ENG'R	PROJ ENGR	APP'D
3	2/1/82	INCORPORATED FCR E-10577	PYM		TC	/		
2	11/3/80	REVISED HORSEPOWER (DCR 8) REVISED NOTE 3 AS BUILT (DCR 4)	MPS					
1	3/19/79	REVISED PER SCR18BH-102	L					
0	2/7/76	ISSUED FOR CONSTRUCTION	MPS					

SCALE — DESIGNED I. B./C. HOU — DRAWN

PENNSYLVANIA POWER & LIGHT COMPANY
ALLENTOWN, PENNSYLVANIA
SUSQUEHANNA STEAM ELECTRIC STATION – UNIT 1, UNIT 2

BECHTEL – SAN FRANCISCO

SCHEMATIC DIAGRAM
MSIV LEAKAGE CONTROL SYSTEM
INBOARD SYSTEM AIR BLOWER UNIT 1

JOB No.	DRAWING No.	REV.
8856	E-189 SH 2	3

D-107338 SH 2

G1P35 SCHEM INBOARD SYS AIR BLWR W

This drawing and the design it covers are the property of BECHTEL. They are merely loaned and on the borrower's express agreement that they will not be reproduced, copied, loaned, exhibited, nor used except in the limited way and private use permitted by any written consent given by the lender to the borrower.

PRC APERTURE CARD

Docket #50-389
Control #8303220112-106
Date 3/10/83 of Document:
REGULATORY DOCKET FILE

UNCONTROLLED DOCUMENT
FOR REFERENCE ONLY

24X

I certify that the microfilmed image contained on this microform were made in the normal and regular course of business. This is a true, full, correct and complete reproduction and replacement for and/or in lieu of original documents prepared by the Bechtel group of companies.
Signed RHEY Date 2-3-82 Camera Type MRG-1
Camera Operator

D

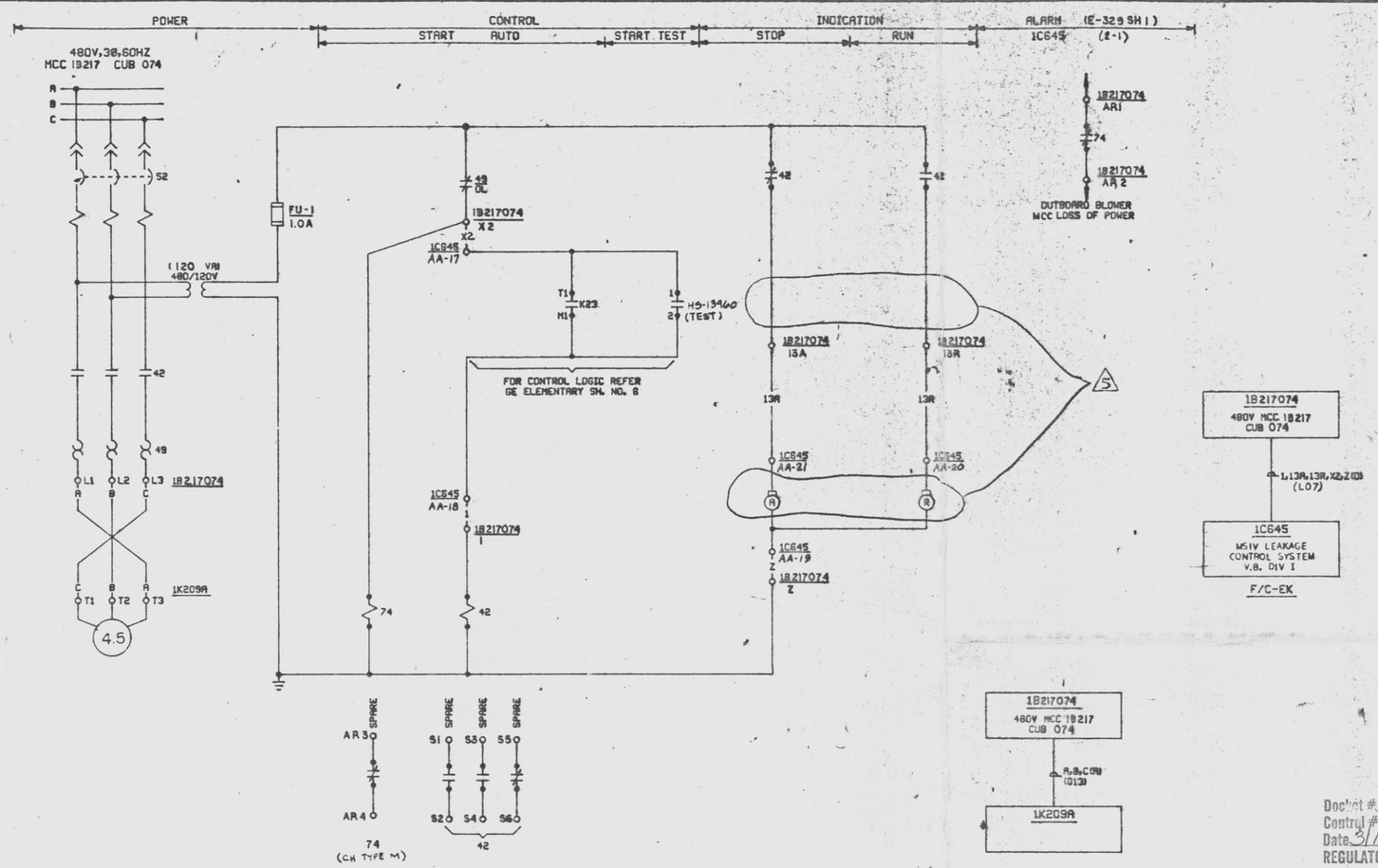

OUTBOARD SYSTEM AIR BLOWER 1K209A [I]

SCHEME NO 1Q6518

REFER. SH. NO. 6

F/C	SCHEME NO	AIR BLOWER NO	AIR BLOWER DESCRIPTION	AIR BLOWER HP	STARTER LOCATION	ESS DIV	INTERLOCK RELAY NO.	INTERLOCK CONTACT	INTERLOCK LOCATION	1C645 TERMINAL NO'S						ALARM
EK/EP	1Q6518	1K209A	OUTBOARD SYSTEM AIR BLOWER	4.5	1B217074	I	K23	T1, M1	1C645	AA-18	AA-21	AA-20	AA-17	AA-19		E-329 SH. 1
EK/EP	1Q6528	1K209B	OUTBOARD SYSTEM AIR BLOWER	4.5	1B236073	I	K23	T3, M3	1C645	AA-24	AA-27	AA-26	AA-23	AA-25		E-329 SH. 1

NOTES:

1. FOR STANDARD SYMBOLS FOR ELECTRICAL DWGS. SEE E-42
2. ALL DEVICE NUMBERS TO BE SUFFIXED BY STARTER LOCATION NUMBER UNLESS OTHERWISE NOTED
3. DESIGN BASED ON GE-APED ELEMENTARY 8S1E708WJ(8856-M1-E32-18(6))

Docket #50-387
Control #8303220112107
Date 3/10/83 of Document:
REGULATORY DOCKET FILE

REFERENCE DWGS.	
BECHTEL NO.	PL NO.
E-42	R-107191
8856-M1-E32-18(6)	FF-127050
E-185	D-107334
E-329	D-107478

No.	DATE	REVISIONS	BY	CHK	SUPV	ENGR	PROJ ENGR	APP'D
4	11/5/78	REVISED HORSEPOWER (PCR 8) REVISE NOTE 3 AS BUILT (SCR 4)	MPS					
3	5/19/79	REV PER SCR-183H-102	L					
2	7/19/77	REVISED MCC CUBICLE NO.	MPS					
1	2/2/82	REV TO INKOR FOR E-10576	JSM					
0	12/7/76	ISSUED FOR CONSTRUCTION	MPS					

SCALE CHAD DESIGNED I.B./C. HOU DRAWN

PENNSYLVANIA POWER & LIGHT COMPANY
ALLENTOWN, PENNSYLVANIA
SUSQUEHANNA STEAM ELECTRIC STATION – UNIT 1, UNIT 2

BECHTEL – SAN FRANCISCO

SCHEMATIC DIAGRAM
MSIV LEAKAGE CONTROL SYSTEM
OUTBOARD SYSTEM AIRBLOWER UNIT 1

JOB No.	DRAWING No.	REV.
8856	E-189 SH 3	5

D-107338 SH 3

UNCONTROLLED DOCUMENT
FOR REFERENCE ONLY

PRC APERTURE CARD

This drawing and the design it covers are the property of BECHTEL. They are merely loaned and on the borrower's express agreement that they will not be reproduced, copied, loaned, exhibited, nor used except in the limited way and private use permitted by any written consent given by the lender to the borrower.

24X

I certify that the microfilmed image contained on this microform were made in the normal and regular course of business. This is a true, full, correct and complete reproduction and replacement for and/or in lieu of original documents generated by the Bechtel group of companies.
Signed JACINTO Date 2-11-83 Camera Type MRG I
Camera Operator

D

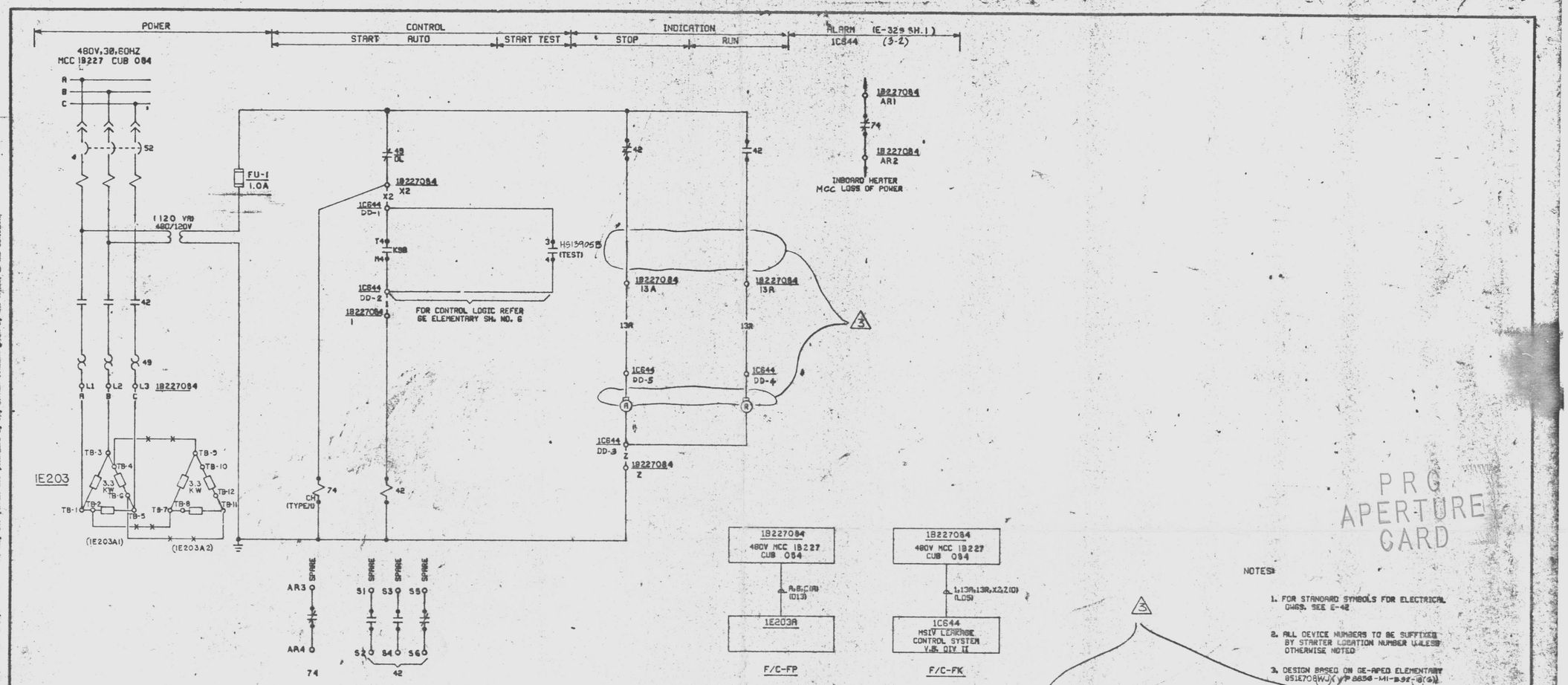

PRG
APERTURE
CARD

NOTES:

1. FOR STANDARD SYMBOLS FOR ELECTRICAL DWGS. SEE E-42
2. ALL DEVICE NUMBERS TO BE SUFFIXED BY STARTER LOCATION NUMBER UNLESS OTHERWISE NOTED
3. DESIGN BASED ON GE-APED ELEMENTARY 851E708WJ (Y/P 8856-M1-B32-18(G))

REVISED PER DCN1 & DCR8

PIPE HEATER - 1E203A [II]

SCHEME NO 1Q6519

REFER SH. NO. 6

F/C	ESS DIV	SCHEME NO	PIPE HEATER NO	PIPE HEATER DESCRIPTION	PIPE HEATER KW	STARTER LOCATION	INTERLOCK RELAY NO.	INTERLOCK CONTACT	INTERLOCK LOCATION	INTERLOCK TEST SWITCH	1C644 TERMINAL NO'S					ALARM
FK/FP	II	1Q6519	1E203A	PIPE HEATER E32-B001B	G.G	1B227084	K9B	T4, M4	1C644	HS13905B	DD-1	DD-2	DD-3	DD-4	DD-5	E329-1
FK/FP	II	1Q6520	1E203B	PIPE HEATER E32-B001F	G.G	1B227094	K9F	T4, M4	1C644	HS13905F	DD-7	DD-8	DD-9	DD-10	DD-11	E329-1
FK/FP	II	1Q6521	1E203C	PIPE HEATER E32-B001K	G.G	1B226114	K9K	T4, M4	1C644	HS13905K	DD-13	DD-14	DD-15	DD-16	DD-17	E329-1
FK/FP	II	1Q6522	1E203D	PIPE HEATER E32-B001P	G.G	1B226124	K9P	T4, M4	1C644	HS13905P	DD-19	DD-20	DD-21	DD-22	DD-23	E329-1

REFERENCE DWGS.	
BECHTEL NO.	PL NO.
E-42	A-107191
8856-M1-E32-18(G)	FF 127050
E-329	D-107478

NO.	DATE	REVISIONS	BY	CHK	DESIGN SUPV	ENG'R	PROJ ENGR	APP'D
3	2/1/82	REVISED TO INCORPORATE FCR E-10579 & DCN NO. 1 (DCR 42)	[illegible]	[illegible]	TC	[illegible]	[illegible]	[illegible]
2	8/3/80	REVISED HTR LOAD PER FCR-E-2564 (REM 8674) (DCR 42)	R.R.	[illegible]	[illegible]	[illegible]	[illegible]	[illegible]
1	3/19/79	REVISED PER SCR188H102	L.L.	[illegible]	[illegible]	[illegible]	[illegible]	[illegible]
0	9/7/76	ISSUED FOR CONSTRUCTION	MPS	[illegible]	[illegible]	[illegible]	[illegible]	[illegible]

SCALE — DESIGNED I. B./C. HOU — DRAWN

PENNSYLVANIA POWER & LIGHT COMPANY
ALLENTOWN, PENNSYLVANIA
SUSQUEHANNA STEAM ELECTRIC STATION – UNIT 1, UNIT 2

BECHTEL – SAN FRANCISCO

SCHEMATIC DIAGRAM
MSIV LEAKAGE CONTROL SYSTEM
PIPE HEATERS UNIT 1

JOB No.	DRAWING No.	REV.
8856	E-189 SH 4	3

D-107338 SH 4

Docket #50-387
Control #8303220112108
Date 3/10/83 of Document:
REGULATORY DOCKET FILE

UNCONTROLLED DOCUMENT
FOR REFERENCE ONLY

Q1P35 SCHEM PIPE HEATERS

This drawing and the design it covers are the property of BECHTEL. They are merely loaned and on the borrower's express agreement that they will not be reproduced, copied, loaned, exhibited, nor used except in the limited way and private use permitted by any written consent given by the lender to the borrower.

24X

I certify that the microfilmed image contained on this microform were made in the normal and regular course of business. This is a true, full, correct and complete reproduction and replacement for and/or in lieu of original documents generated by the Bechtel group of companies.

Signed JACINTO Date 2-11-83 Camera Type MRG I
Camera Operator

D

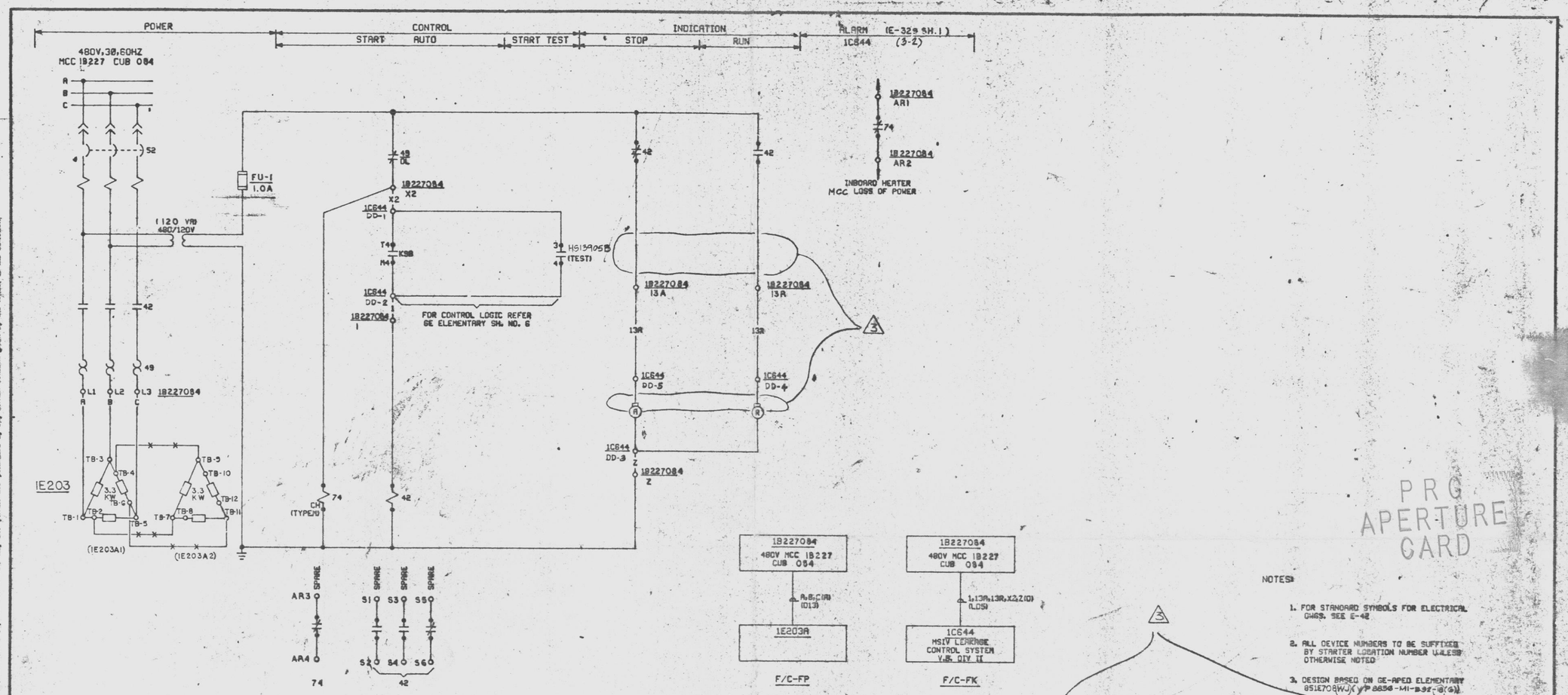

PRG
APERTURE
CARD

NOTES:

1. FOR STANDARD SYMBOLS FOR ELECTRICAL DWGS. SEE E-42
2. ALL DEVICE NUMBERS TO BE SUFFIXED BY STARTER LOCATION NUMBER UNLESS OTHERWISE NOTED
3. DESIGN BASED ON GE-APED ELEMENTARY 851E708WJ (Y/P 8856-M1-B32-18(G))

REVISED PER DCN1 & DCR8

PIPE HEATER - 1E203A [II]

SCHEME NO 1Q6519

REFER SH. NO. 6

F/C	ESS DIV	SCHEME NO	PIPE HEATER NO	PIPE HEATER DESCRIPTION	PIPE HEATER KW	STARTER LOCATION	INTERLOCK RELAY NO.	INTERLOCK CONTACT	INTERLOCK LOCATION	INTERLOCK TEST SWITCH	1C644 TERMINAL NO'S					ALARM
FK/FP	II	1Q6519	1E203A	PIPE HEATER E32-B001B	G.G	1B227084	K9B	T4, M4	1C644	HS13905B	DD-1	DD-2	DD-3	DD-4	DD-5	E329-1
FK/FP	II	1Q6520	1E203B	PIPE HEATER E32-B001F	G.G	1B227094	K9F	T4, M4	1C644	HS13905F	DD-7	DD-8	DD-9	DD-10	DD-11	E329-1
FK/FP	II	1Q6521	1E203C	PIPE HEATER E32-B001K	G.G	1B226114	K9K	T4, M4	1C644	HS13905K	DD-13	DD-14	DD-15	DD-16	DD-17	E329-1
FK/FP	II	1Q6522	1E203D	PIPE HEATER E32-B001P	G.G	1B226124	K9P	T4, M4	1C644	HS13905P	DD-19	DD-20	DD-21	DD-22	DD-23	E329-1

REFERENCE DWGS.	
BECHTEL NO.	PL NO.
E-42	A-107191
8856-M1-E32-18(G)	FF 127050
E-329	D-107478

NO.	DATE	REVISIONS	BY	CHK	DESIGN SUPV	ENG'R	PROJ ENGR	APP'D
3	2/1/82	REVISED TO INCORPORATE FCR E-10579 & DCN NO. 1 (DCR 42)	[illegible]	[illegible]	[illegible]	[illegible]	[illegible]	[illegible]
2	8/3/80	REVISED HTR LOAD PER FCR-E-2564 (REM 8674) (DCR 42)	R.R.	[illegible]	[illegible]	[illegible]	[illegible]	[illegible]
1	3/19/79	REVISED PER SCR188H102	L.L.	[illegible]	[illegible]	[illegible]	[illegible]	[illegible]
0	9/7/76	ISSUED FOR CONSTRUCTION	MPS	[illegible]	[illegible]	[illegible]	[illegible]	[illegible]

SCALE — DESIGNED I. B./C. HOU — DRAWN

PENNSYLVANIA POWER & LIGHT COMPANY
ALLENTOWN, PENNSYLVANIA
SUSQUEHANNA STEAM ELECTRIC STATION – UNIT 1, UNIT 2

BECHTEL – SAN FRANCISCO

SCHEMATIC DIAGRAM
MSIV LEAKAGE CONTROL SYSTEM
PIPE HEATERS UNIT 1

JOB No.	DRAWING No.	REV.
8856	E-189 SH 4	3

D-107338 SH 4

Docket #50-387
Control #8303220112108
Date 3/10/83 of Document:
REGULATORY DOCKET FILE

UNCONTROLLED DOCUMENT
FOR REFERENCE ONLY

Q1P35 SCHEM PIPE HEATERS

This drawing and the design it covers are the property of BECHTEL. They are merely loaned and on the borrower's express agreement that they will not be reproduced, copied, loaned, exhibited, nor used except in the limited way and private use permitted by any written consent given by the lender to the borrower.

24X

I certify that the microfilmed image contained on this microform were made in the normal and regular course of business. This is a true, full, correct and complete reproduction and replacement for and/or in lieu of original documents generated by the Bechtel group of companies.

Signed JACINTO Camera Operator Date 2-11-83 Camera Type MRG I

D

This drawing and the design it covers are the property of BECHTEL. They are merely loaned and on the borrower's express agreement that they will not be reproduced, copied, loaned, exhibited, nor used except in the limited way and private use permitted by any written consent given by the lender to the borrower.

HV-E32-1F001B ZS-6 (E-189, SH.1)

1, X1 (C) (L02)

TYPICAL, FOR CABLE D THRU P SEE TABLE BELOW

1C044 MSIV LEAKAGE CONTROL SYSTEM V.P. DIV. II

X1, X2, X3, X4, Z (B) (L05)

FLOW XMTR FT-E32-1N053B | FLOW XMTR FT-E32-1N053F | FLOW XMTR FT-E32-1N053K | FLOW XMTR FT-E32-1N053P

1C074 MSIV LEAKAGE CONTROL SYSTEM PANEL DIV II

F/C-FK
POWER SUPPLY TO FLOW TRANSMITTERS [II]
SCHEME NO. 1Q6523
REF. SH. 3 & 5, 5A

HV-E32-1F006 ZS-6 | HV-E32-1F007 ZS-6

1, 2 (C) (L02) | 3, 4 (D) (L02)

1C045 MSIV LEAKAGE CONTROL SYS V.P. DIV I

5, 6 (E) (L02) | 7, 8 (F) (L02)

HV-E32-1F008 ZS-6 | HV-E32-1F009 ZS-6

F/C-EK
MSIV LEAKAGE CONTROL SYSTEM INTERLOCK [I]
SCHEME NO. 1Q6529
REF. SH 7

1C043 MSIV LEAKAGE CONTROL SYSTEM V.P. DIV. I

1, 2, 3, 4, 5, 6 (C) (Q26) | 7, 8 (D) (Q24)

PRESS XMTR PT-E32-1N055 | PRESS XMTR PT-E32-1N056 | DIFF PRESS XMTR FT-E32-1N059

1C073 MSIV LEAKAGE CONTROL SYSTEM PANEL DIV I

TB1C004-C1: PRESS XMTR PT-E32-1N058 — REAC VESSEL LEVEL & PRESS 'A' PANEL

F/C-EM
MSIV LEAKAGE CONTROL SYSTEM INSTRUMENTATION [I]
SCHEME NO. 1Q6525
REF. SH. 4

TE-E32-1N005B | TE-E32-1N005F | TE-E32-1N005K | TE-E32-1N005P — BY VENDOR

TB0348 (SEE NOTE 5)

1, 2 (C) (TQ8) (NOTE 2) | 3, 4 (D) (TQ8) (NOTE 2) | 5, 6 (E) (TQ8) (NOTE 2) | 7, 8 (F) (TQ8) (NOTE 2)

TB1C003-A3: PRESS XMTR PT-E32-1N030 | PRESS XMTR PT-E32-1N040 — REAC VESSEL LEVEL & PRESS 'B' PANEL

9, 10, 11, 12 (G) (Q25)

1C044 MSIV LEAKAGE CONTROL SYSTEM V.P. DIV II

13, 14, 15, 16 (H) (Q25) | 17, 18, 19, 20 (J) (Q25) | 35, 36, 37, 38 (L) (Q25) | 38, 39 (R) (Q24) | 21, 22, 23, 24, 25, 26, 27, 28, 29, 30, 31, 32, 33, 34 (K) (Q27)

TB0521 — BY FIELD

FLOW XMTR FT-E32-1N053B | FLOW XMTR FT-E32-1N053F | FLOW XMTR FT-E32-1N053K | FLOW XMTR FT-E32-1N053P | DIFF. P. XMTR FT-E32-1N034

1C074

PRESS XMTR PT-E32-1N051B | PRESS XMTR PT-E32-1N051F | PRESS XMTR PT-E32-1N051K | PRESS XMTR PT-E32-1N051P | PRESS XMTR PT-E32-1N061B | PRESS XMTR PT-E32-1N061F | PRESS XMTR PT-E32-1N061K | PRESS XMTR PT-E32-1N061P

MSIV LEAKAGE CONTROL SYSTEM PANEL

39, 40, 41 (M) (Q28) | 42, 43, 44 (N) (Q28) | 45, 46, 47 (P) (Q28) | 48, 49, 50 (Q) (Q28)

FLOW ELEMENT FE-E32-1N006B | FLOW ELEMENT FE-E32-1N006F | FLOW ELEMENT FE-E32-1N006K | FLOW ELEMENT FE-E32-1N006P

F/C-FM
MSIV LEAKAGE CONTROL SYSTEM INSTRUMENTATION [II]
SCHEME NO. 1Q6527
REF. SHT 4 & 7

HV-B21-1F022A (ZS-13) | HV-B21-1F022B (ZS-13) | HV-B21-1F022C (ZS-13) | HV-B21-1F022D (ZS-13)

1, 2 (C) (Z02) | 3, 4 (E) (Z02) | 5, 6 (G) (Z02) | 7, 8 (J) (Z02)

IW106B

1, 2 (D) (L02) | 3, 4 (F) (L02) | 5, 6 (H) (L02) | 7, 8 (K) (L02)

1C044 MSIV LEAKAGE CONTROL V.P. DIV II

F/C-FK
MSIV LEAKAGE CONTROL SYTEM CONTROL [I]
SCHEME NO. 1Q6531
SEE NOTE 6

F/C	SCHEME NO.	MOTOR OPERATED VALVE NO.	DESCRIPTION	CABLE NO.	WIRE NO.
FK	1Q6523	HV-E32-1F001B	MSIV INBOARD STM LINE A	C	1, X1
		1F	B	D	4, X2
		1K	C	E	7, X3
		1P	D	F	10, X4
		HV-E32-1F002B	MSIV INBOARD STM LINE A	G	2, X1
		2F	B	H	5, X2
		2K	C	J	8, X3
		2P	D	K	11, X4
		HV-E32-1F003B	MSIV BLEEDER BYPASS VLV. A	L	3, X1
		3F	B	M	6, X2
		3K	C	N	9, X3
		3P	D	P	12, X4

NOTES:

1. FOR STANDARD SYMBOLS FOR ELECTRICAL DIAGRAM SEE DWG E-42.
2. THERMOCOUPLE CABLE SHIELD SHOULD BE GROUNDED AT TERMINAL BOX ONLY.
3. DESIGN BASED ON GE-APED ELEMENTARY 851E708WJ(8856-M1-E32-1).
4. FOR 120VAC POWER SUPPLY SEE DWG. E-64, SH. 15.
5. FIELD SUPPLIED CHROMEL ALUMEL TERMINAL BLOCK.
6. FOR LIMIT SWITCH DEVELOPMENT SEE DWG E-170 SH 1.

REFERENCE DWG'S.

BECHTEL NO.	PL. NO.
E-42	A-107191
8856-M1-E32-1	FE107050

Docket #50-387
Control #8303220117-109
Date 3/10/83 of Document:
REGULATORY DOCKET FILE

UNCONTROLLED DOCUMENT
FOR REFERENCE ONLY

NO.	DATE	REVISIONS	BY	CHK'R	DESIGN SUPV	ENG'R	PROJ ENGR	APP'D
5	7/27/83	REV. BLOCK DIAGRAM (DCR 42)	SKL					
4	6/3/83	REV. PER FCR 82395 & 2323 (AS BUILT)	RE	BB	LL			
3	2/4/83	ADDED NOTE 5 (DCR 8)	RL	CW	LL			
2	11/8/82	REV. TO INCORP ECN #1 (DCP 659.1 REV. 1) AND FCN E-3476	SK AR	KA	TC LL			
1	7/27/82	INCORP FCR E-5006	LL	LL	TC LL			
0	5/14/82	ISSUED FOR CONSTRUCTION	MPS	SK	LL			

SCALE — | DESIGNED C. S. HOU | DRAWN MPSANTOS

PENNSYLVANIA POWER & LIGHT COMPANY
ALLENTOWN, PENNSYLVANIA
SUSQUEHANNA STEAM ELECTRIC STATION – UNIT 1, UNIT 2

BECHTEL – SAN FRANCISCO

SCHEMATIC DIAGRAM MSIV LEAKAGE CONTROL SYSTEM INSTRUMENTATION UNIT 1

JOB No.	DRAWING No.	REV.
8856	E-189 SH 5	7

D-107338 SH 5

GIPAB SCHEM MSIV LEAKAGE CON SYS W

PRC APERTURE CARD

24X

I certify that the microfilmed image contained on this microform were made in the normal and regular course of business. This is a true, full, correct and complete reproduction and replacement for and/or in lieu of original documents generated by the Bechtel group of companies.
Signature DANNY Camera Operator Date 8-13-82 MRG 1

D

This drawing and the design it covers are the property of BECHTEL. They are merely loaned and on the borrower's express agreement that they will not be reproduced, copied, loaned, exhibited, nor used except in the limited way and private use permitted by any written consent given by the lender to the borrower.

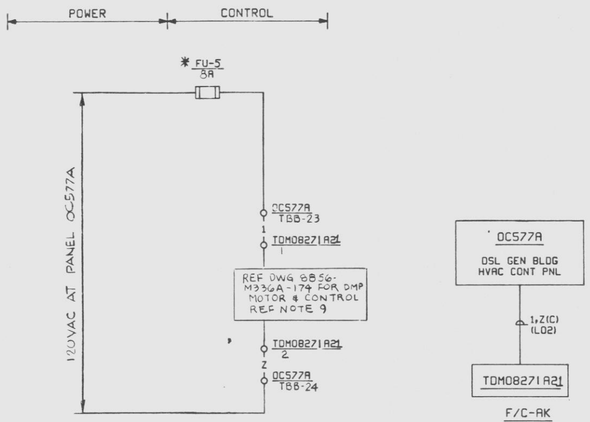

DSL GEN A VENT RECIRC AIR DAMPER MOTOR TDM08271A21

SCHEME NO OV5138 [A]

(SEE TABLE A & B)

TABLE A

SCHEME NO.	DAMPER OPERATOR		FUSE *		ESS CHAN	F/C	TERMINAL NUMBERS	
	NUMBER	DESCRIPTION	NO.	LOC.				
OV5138	TDM08271A21	DSL GEN A VENT RECIRC AIR DAMPER A21 MOTOR	FU-5	OC577A	A	AK	B-23	B-24
OV5139	TDM08271A22	DSL GEN A VENT RECIRC AIR DAMPER A22 MOTOR	FU-6	OC577A	A	AK	B-25	B-26
OV5148	TDM08271B21	DSL GEN B VENT RECIRC AIR DAMPER B21 MOTOR	FU-5	OC577B	B	BK	B-23	B-24
OV5149	TDM08271B22	DSL GEN B VENT RECIRC AIR DAMPER B22 MOTOR	FU-6	OC577B	B	BK	B-25	B-26
OV5158	TDM08271C21	DSL GEN C VENT RECIRC AIR DAMPER C21 MOTOR	FU-5	OC577C	C	CK	B-23	B-24
OV5159	TDM08271C22	DSL GEN C VENT RECIRC AIR DAMPER C22 MOTOR	FU-6	OC577C	C	CK	B-25	B-26
OV5178	TDM08271D21	DSL GEN D VENT RECIRC AIR DAMPER D21 MOTOR	FU-5	OC577D	D	DK	B-23	B-24
OV5179	TDM08271D22	DSL GEN D VENT RECIRC AIR DAMPER D22 MOTOR	FU-6	OC577D	D	DK	B-25	B-26

TABLE B

SCHEME NO	DAMPER OPERATOR		FUSE *		ESS CHAN	F/C	TERMINAL NUMBERS	
	NUMBER	▲ DESCRIPTION	NO.	LOC				
OV5134	TDM08271A1	DSL GEN A VENT OUTSIDE AIR INTAKE DAMPER A11 MOTOR	FU-1	OC577A	A	AK	B-27	B-28
OV5140	TDM08271A3	DSL GEN A VENT EXHAUST AIR OUTLET DAMPER A31 MOTOR	FU-7	OC577A	A	AK	B-29	B-30
OV5144	TDM08271B1	DSL GEN B VENT OUTSIDE AIR INTAKE DAMPER B11 MOTOR	FU-1	OC577B	B	BK	B-27	B-28
OV5150	TDM08271B3	DSL GEN B VENT EXHAUST AIR OUTLET DAMPER B31 MOTOR	FU-7	OC577B	B	BK	B-29	B-30
OV5154	TDM08271C1	DSL GEN C VENT OUTSIDE AIR INTAKE DAMPER C11 MOTOR	FU-1	OC577C	C	CK	B-27	B-28
OV5170	TDM08271C3	DSL GEN C VENT EXHAUST AIR OUTLET DAMPER C31 MOTOR	FU-7	OC577C	C	CK	B-29	B-30
OV5174	TDM08271D1	DSL GEN D VENT OUTSIDE AIR INTAKE DAMPER D11 MOTOR	FU-1	OC577D	D	DK	B-27	B-28
OV5180	TDM08271D3	DSL GEN D VENT EXHAUST AIR OUTLET DAMPER D31 MOTOR	FU-7	OC577D	D	DK	B-29	B-30

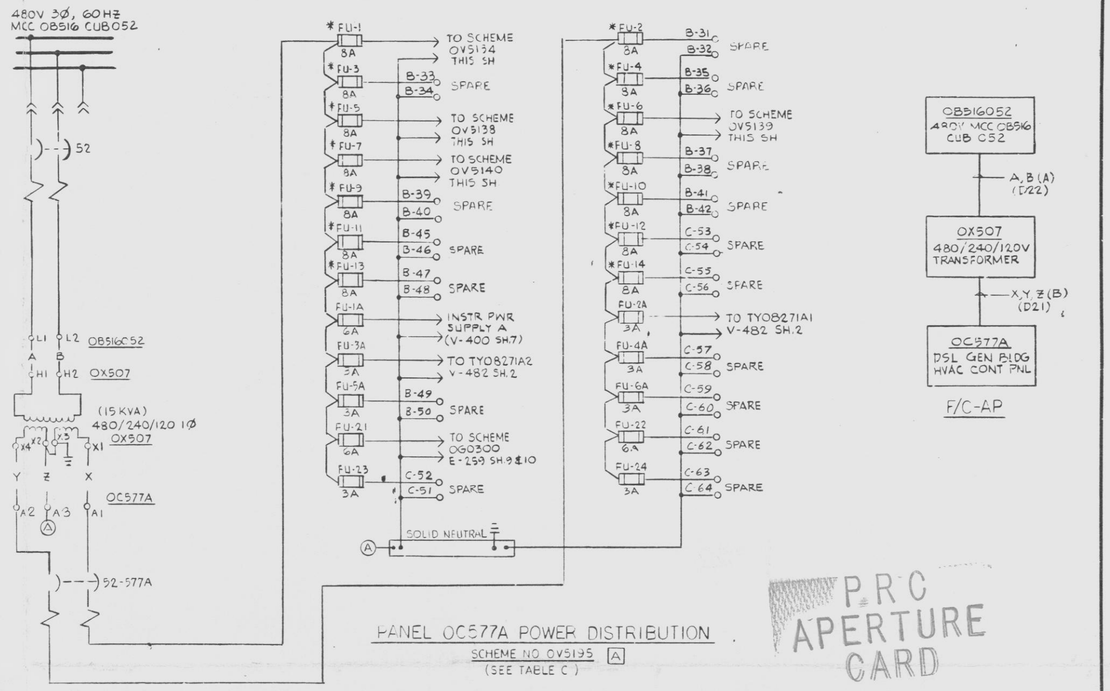

PANEL OC577A POWER DISTRIBUTION

SCHEME NO OV5135 [A]

(SEE TABLE C)

TABLE C

SCHEME NO	PANEL	ESS CHAN	F/C	CIRC BKR LOC	XMER	TO SCHEME'S	INSTR POWER FUSES						CONTROL FUSE		
							NO.	PWR SUPPLY	NO.	INSTR.	NO.	INSTR.	NO.	SCHEME	DWG
OV5195	OC577A	A	AP	OB516052	OX507	OV5134,38,39&40	FU-1A	A	FU-2A	TY08271A1	FU-3A	TY08271A2	FU-21	OG0300	E-259 SH.9&10
OV5196	OC577B	B	BP	OB526052	OX508	OV5144,48,49&50	FU-1B	B	FU-2B	TY08271B1	FU-3B	TY08271B2	FU-21	OG0302	E-259 SH.10
OV5197	OC577C	C	CP	OB536052	OX509	OV5154,58,59&70	FU-1C	C	FU-2C	TY08271C1	FU-3C	TY08271C2	FU-21	OG0304	E-259 SH.10
OV5198	OC577D	D	DP	OB546052	OX510	OV5174,78,79&80	FU-1D	D	FU-2D	TY08271D1	FU-3D	TY08271D2	FU-21	OG0306	E-259 SH.10

NOTES:

1. FOR STANDARD SYMBOLS FOR ELECTRICAL DIAGRAM SEE DWG 8855-E-42.
2. PANEL OC577A B,C & D SHALL HAVE BUCHANAN TYPE NO. 362 FUSE BLOCK WITH TUBULAR SCREW CONTACT.
3. FUSES SHOWN WITH ASTERISK (*) SHALL BE FUSETRON DUAL-ELEMENT MIDGET FUSES TYPE FNM, RATED AT 250V.
4. ALL OTHER FUSES SHALL BE LIMITRON TYPE KTK RATED AT 600V.
5. TERMINAL BLOCK FOR THE EXTERNAL 3-1/C #2 COPPER CABLES SHALL HAVE SCREW TYPE TERMINALS FOR RING TYPE CONNECTORS, RATED 50A AT 600V.
6. WIRING FROM TERMINAL BLOCK TO CIRCUIT BREAKER AND SOLID NEUTRAL BUS SHALL BE #8 AWG TYPE SIS OR TA COPPER CONDUCTOR RATED 600V.
7. WIRING FROM CIRCUIT BREAKER TO FUSE BLOCKS AND FUSE BLOCK JUMPERS SHALL BE #8 AWG TYPE SIS OR TA COPPER CONDUCTOR RATED 600V.
8. CIRCUIT BREAKER 52-577A,B,C & D SHALL BE ITE TYPE EE2-3050 MOLDED CASE, 2 POLE, 50A, RATED 240VAC.
9. ALL DAMPERS ON THIS SHEET ARE OF THE MODULATING TYPE. THEY ARE CONTROLLED BY AN ANALOG SIGNAL AS SHOWN ON INSTRUMENT LOOP V-482 SH 2.

REFERENCE DWGS.	
BECHTEL NO.	PL NO.
E-42	A-107191
V-182	B-106522
V-482	D-106282
V-400	D-106200
V-482	D-106532
8856 M336A-174	FF-108860

1 UNIT 1 AND COMMON PORTIONS OF THIS DRAWING ARE UNDER PP&L ADMINISTRATIVE CONTROL. 2 NO CHANGES CAN BE MADE TO THESE PORTIONS WITHOUT PRIOR PP&L APPROVAL

P.R.C APERTURE CARD

UNCONTROLLED DOCUMENT FOR REFERENCE ONLY

NO.	DATE	REVISIONS	BY	CHK	DESIGN SUPV	ENG	PROJ MGR	APP'D
5	7/1/83	ISSUED "AS-BUILT"	UN	JH	TC		BH	
4	7/6/83	REVISED TERMINOS TO AGREE WITH CONNECTION LIST (SPR 2112) (DCR # 2)	HA	JH			BH	
3	6/17/83	REVISED MCC & PWR. DIST TO DAMPER OPERATORS	KL	JH			BH	
2	3/3/83	REMOVED HOLD. REVISED NOTE 2 & ADDED NOTE 9.	JB	JB	DC		BH	
1	11-1-74	ISSUED FOR CONSTRUCTION	ETG 79	MT WSS	AB		UR EKK	OP HNR

SCALE NONE | DESIGNED J. BURROR | DRAWN

PENNSYLVANIA POWER & LIGHT COMPANY

ALLENTOWN, PENNSYLVANIA

SUSQUEHANNA STEAM ELECTRIC STATION – UNIT 1, UNIT 2

BECHTEL – SAN FRANCISCO

SCHEMATIC DIAGRAM HVAC DIESEL GENERATOR BLDG VENT SYS MOTOR OPER DAMPERS - COMMON

JOB No.	DRAWING No.	REV.
8856	E-193 SH 2	8

D-107342 SH 2

22 X 34 "D" SIZE

Doc# 50-387
Control # 8303220117-116
Date 3/10/83 of Document:
REGULATORY DOCKET FILE

GV2R93 SCHEM DGB VENT SYS W

4/76 D-P ADVANCUT NO. 2310-9005

24X

I certify that the microfilmed image contained on this microform were made in the normal and regular course of business. This is a true, full, correct and complete reproduction and replacement for and/or in lieu of origin al documents generated by the Bechtel group of companies.
Signed DANNY Date 4-15-82 Camera Type MRG I
Camera Operator

D

This drawing and the design it covers are the property of BECHTEL. They are merely loaned and on the borrower's express agreement that they will not be reproduced, copied, loaned, exhibited, nor used except in the limited way and private use permitted by any written consent given by the lender to the borrower.

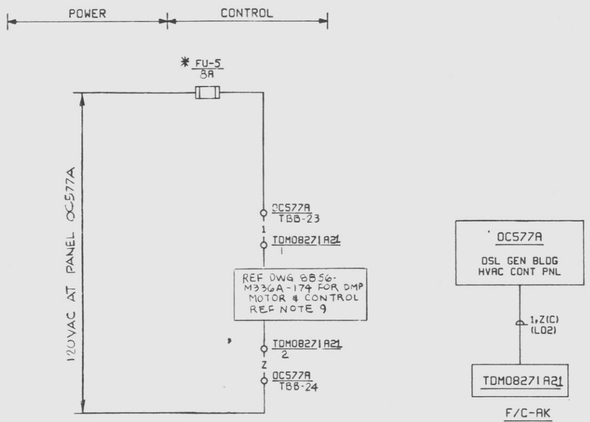

DSL GEN A VENT RECIRC AIR DAMPER MOTOR TDM08271A21

SCHEME NO OV5138 [A]

(SEE TABLE A & B)

TABLE A

SCHEME NO.	DAMPER OPERATOR		FUSE *		ESS CHAN	F/C	TERMINAL NUMBERS	
	NUMBER	DESCRIPTION	NO.	LOC.				
OV5138	TDM08271A21	DSL GEN A VENT RECIRC AIR DAMPER A21 MOTOR	FU-5	OC577A	A	AK	B-23	B-24
OV5139	TDM08271A22	DSL GEN A VENT RECIRC AIR DAMPER A22 MOTOR	FU-6	OC577A	A	AK	B-25	B-26
OV5148	TDM08271B21	DSL GEN B VENT RECIRC AIR DAMPER B21 MOTOR	FU-5	OC577B	B	BK	B-23	B-24
OV5149	TDM08271B22	DSL GEN B VENT RECIRC AIR DAMPER B22 MOTOR	FU-6	OC577B	B	BK	B-25	B-26
OV5158	TDM08271C21	DSL GEN C VENT RECIRC AIR DAMPER C21 MOTOR	FU-5	OC577C	C	CK	B-23	B-24
OV5159	TDM08271C22	DSL GEN C VENT RECIRC AIR DAMPER C22 MOTOR	FU-6	OC577C	C	CK	B-25	B-26
OV5178	TDM08271D21	DSL GEN D VENT RECIRC AIR DAMPER D21 MOTOR	FU-5	OC577D	D	DK	B-23	B-24
OV5179	TDM08271D22	DSL GEN D VENT RECIRC AIR DAMPER D22 MOTOR	FU-6	OC577D	D	DK	B-25	B-26

TABLE B

SCHEME NO	DAMPER OPERATOR		FUSE *		ESS CHAN	F/C	TERMINAL NUMBERS	
	NUMBER	▲ DESCRIPTION	NO.	LOC				
OV5134	TDM08271A1	DSL GEN A VENT OUTSIDE AIR INTAKE DAMPER A11 MOTOR	FU-1	OC577A	A	AK	B-27	B-28
OV5140	TDM08271A3	DSL GEN A VENT EXHAUST AIR OUTLET DAMPER A31 MOTOR	FU-7	OC577A	A	AK	B-29	B-30
OV5144	TDM08271B1	DSL GEN B VENT OUTSIDE AIR INTAKE DAMPER B11 MOTOR	FU-1	OC577B	B	BK	B-27	B-28
OV5150	TDM08271B3	DSL GEN B VENT EXHAUST AIR OUTLET DAMPER B31 MOTOR	FU-7	OC577B	B	BK	B-29	B-30
OV5154	TDM08271C1	DSL GEN C VENT OUTSIDE AIR INTAKE DAMPER C11 MOTOR	FU-1	OC577C	C	CK	B-27	B-28
OV5170	TDM08271C3	DSL GEN C VENT EXHAUST AIR OUTLET DAMPER C31 MOTOR	FU-7	OC577C	C	CK	B-29	B-30
OV5174	TDM08271D1	DSL GEN D VENT OUTSIDE AIR INTAKE DAMPER D11 MOTOR	FU-1	OC577D	D	DK	B-27	B-28
OV5180	TDM08271D3	DSL GEN D VENT EXHAUST AIR OUTLET DAMPER D31 MOTOR	FU-7	OC577D	D	DK	B-29	B-30

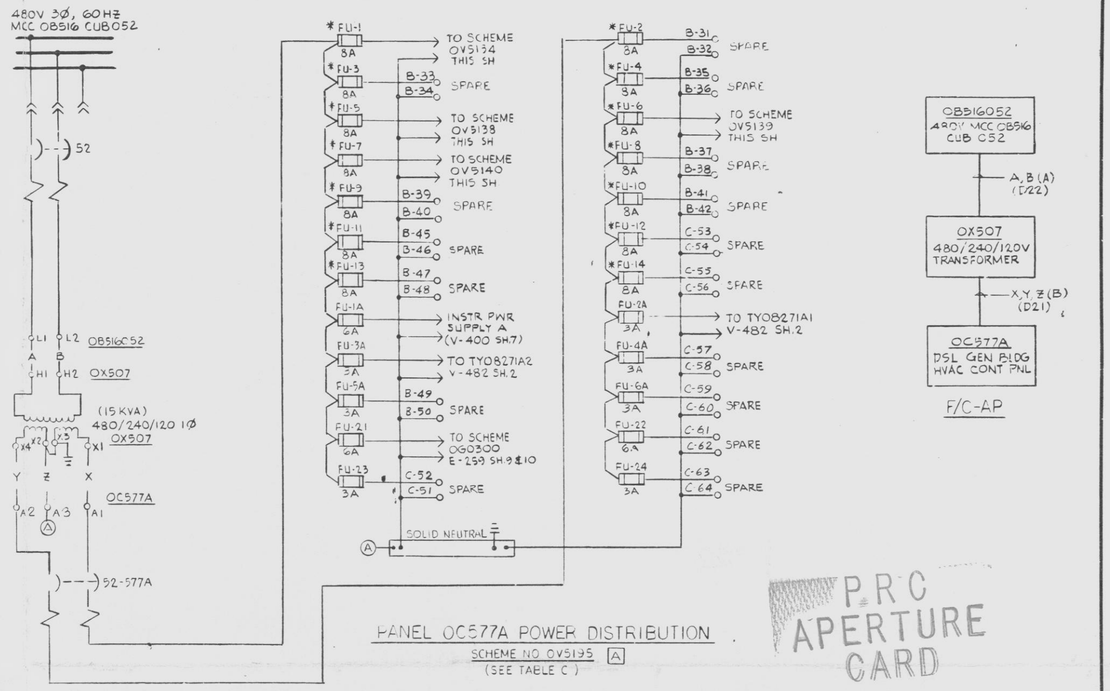

PANEL OC577A POWER DISTRIBUTION

SCHEME NO OV5135 [A]

(SEE TABLE C)

TABLE C

SCHEME NO	PANEL	ESS CHAN	F/C	CIRC BKR LOC	XMER	TO SCHEME'S	INSTR POWER FUSES						CONTROL FUSE		
							NO.	PWR SUPPLY	NO.	INSTR.	NO.	INSTR.	NO.	SCHEME	DWG
OV5195	OC577A	A	AP	OB516052	OX507	OV5134,38,39&40	FU-1A	A	FU-2A	TY08271A1	FU-3A	TY08271A2	FU-21	OG0300	E-259 SH.9&10
OV5196	OC577B	B	BP	OB526052	OX508	OV5144,48,49&50	FU-1B	B	FU-2B	TY08271B1	FU-3B	TY08271B2	FU-21	OG0302	E-259 SH.10
OV5197	OC577C	C	CP	OB536052	OX509	OV5154,58,59&70	FU-1C	C	FU-2C	TY08271C1	FU-3C	TY08271C2	FU-21	OG0304	E-259 SH.10
OV5198	OC577D	D	DP	OB546052	OX510	OV5174,78,79&80	FU-1D	D	FU-2D	TY08271D1	FU-3D	TY08271D2	FU-21	OG0306	E-259 SH.10

NOTES:

1. FOR STANDARD SYMBOLS FOR ELECTRICAL DIAGRAM SEE DWG 8855-E-42.
2. PANEL OC577A B,C & D SHALL HAVE BUCHANAN TYPE NO. 362 FUSE BLOCK WITH TUBULAR SCREW CONTACT.
3. FUSES SHOWN WITH ASTERISK (*) SHALL BE FUSETRON DUAL-ELEMENT MIDGET FUSES TYPE FNM, RATED AT 250V.
4. ALL OTHER FUSES SHALL BE LIMITRON TYPE KTK RATED AT 600V.
5. TERMINAL BLOCK FOR THE EXTERNAL 3-1/C #2 COPPER CABLES SHALL HAVE SCREW TYPE TERMINALS FOR RING TYPE CONNECTORS, RATED 50A AT 600V.
6. WIRING FROM TERMINAL BLOCK TO CIRCUIT BREAKER AND SOLID NEUTRAL BUS SHALL BE #8 AWG TYPE SIS OR TA COPPER CONDUCTOR RATED 600V.
7. WIRING FROM CIRCUIT BREAKER TO FUSE BLOCKS AND FUSE BLOCK JUMPERS SHALL BE #8 AWG TYPE SIS OR TA COPPER CONDUCTOR RATED 600V.
8. CIRCUIT BREAKER 52-577A,B,C & D SHALL BE ITE TYPE EE2-3050 MOLDED CASE, 2 POLE, 50A, RATED 240VAC.
9. ALL DAMPERS ON THIS SHEET ARE OF THE MODULATING TYPE. THEY ARE CONTROLLED BY AN ANALOG SIGNAL AS SHOWN ON INSTRUMENT LOOP V-482 SH 2.

REFERENCE DWGS.	
BECHTEL NO.	PL NO.
E-42	A-107191
V-182	B-106522
V-482	D-106282
V-400	D-106200
V-482	D-106532
8856 M336A-174	FF-108860

1 UNIT 1 AND COMMON PORTIONS OF THIS DRAWING ARE UNDER PP&L ADMINISTRATIVE CONTROL. 2 NO CHANGES CAN BE MADE TO THESE PORTIONS WITHOUT PRIOR PP&L APPROVAL

P.R.C APERTURE CARD

UNCONTROLLED DOCUMENT FOR REFERENCE ONLY

NO.	DATE	REVISIONS	BY	CHK	DESIGN SUPV	ENG	PROJ MGR	APP'D
5	7/1/83	ISSUED "AS-BUILT"	UN	JH	TC		BH	
4	7/6/83	REVISED TERMINOS TO AGREE WITH CONNECTION LIST (SPR 2112) (DCR # 2)	HA	JH			BH	
3	6/17/83	REVISED MCC & PWR. DIST TO DAMPER OPERATORS	KL	JH			BH	
2	3/3/83	REMOVED HOLD. REVISED NOTE 2 & ADDED NOTE 9.	JB	JB	DC		BH	
1	11-1-74	ISSUED FOR CONSTRUCTION	ETG 79	MT WSS	AB		UR EKK	OP HNR

SCALE NONE | DESIGNED J. BURROR | DRAWN

PENNSYLVANIA POWER & LIGHT COMPANY

ALLENTOWN, PENNSYLVANIA

SUSQUEHANNA STEAM ELECTRIC STATION – UNIT 1, UNIT 2

BECHTEL – SAN FRANCISCO

SCHEMATIC DIAGRAM HVAC DIESEL GENERATOR BLDG VENT SYS MOTOR OPER DAMPERS - COMMON

JOB No.	DRAWING No.	REV.
8856	E-193 SH 2	8

D-107342 SH 2

22 X 34 "D" SIZE

Doc# 50-387
Control # 8303220117-116
Date 3/10/83 of Document:
REGULATORY DOCKET FILE

GV2R93 SCHEM DGB VENT SYS W

4/76 D-P ADVANCUT NO. 2310-9005

24X

I certify that the microfilmed image contained on this microform were made in the normal and regular course of business. This is a true, full, correct and complete reproduction and replacement for and/or in lieu of origin al documents generated by the Bechtel group of companies.
Signed DANNY Date 4-15-82 Camera Type MRG I
Camera Operator

D

This drawing and the design it covers are the property of BECHTEL. They are merely loaned and on the borrower's express agreement that they will not be reproduced, copied, loaned, exhibited, nor used except in the limited way and private use permitted by any written consent given by the lender to the borrower.

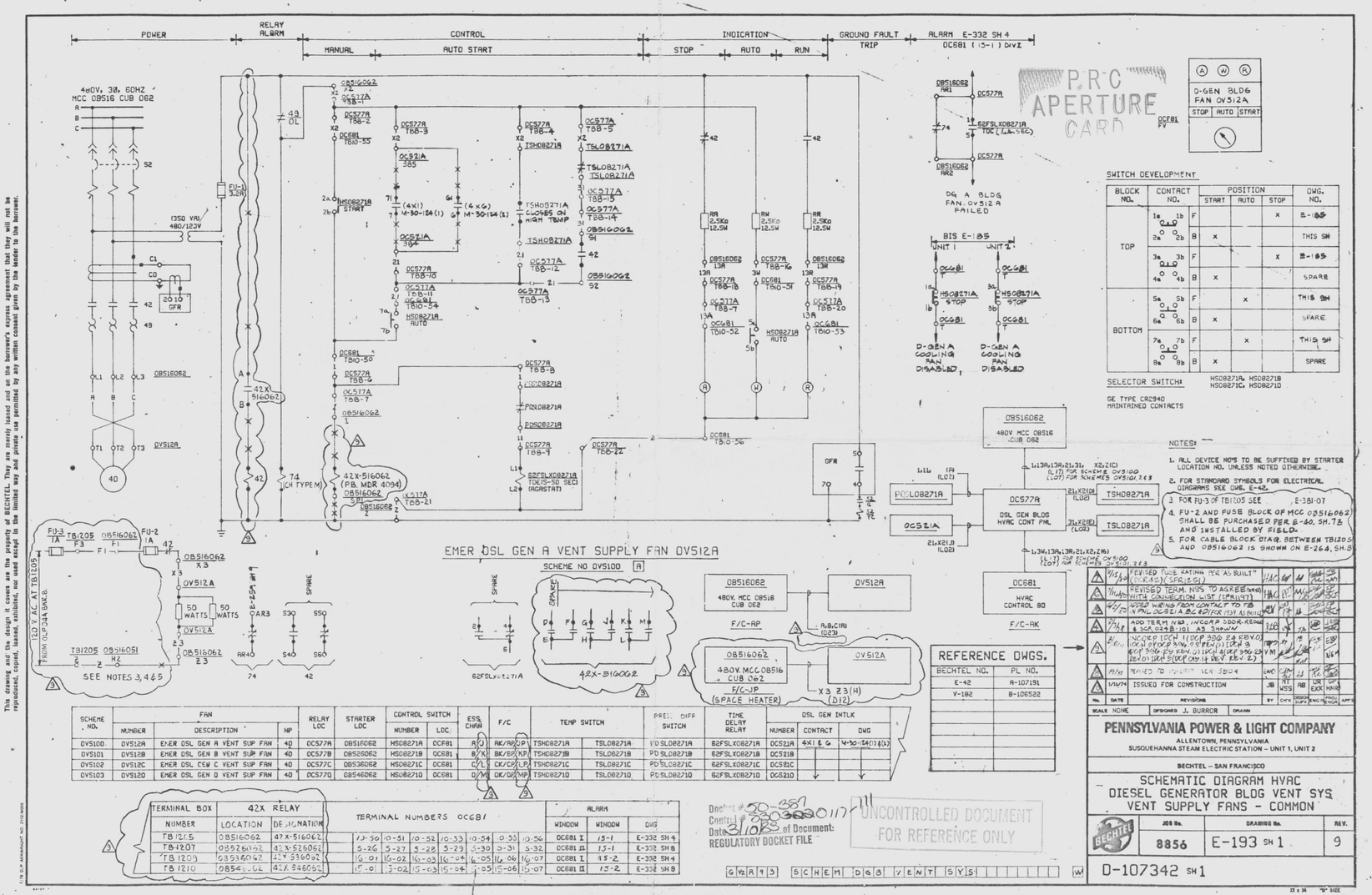

BLOCK NO.	CONTACT NO.		POSITION START	POSITION AUTO	POSITION STOP	DWG. NO.
TOP	1a 1b / 2a 2b	F			X	E-185
		B	X			THIS SH
	3a 3b / 4a 4b	F			X	E-185
		B	X			SPARE
BOTTOM	5a 5b / 6a 6b	F		X		THIS SH
		B	X			SPARE
	7a 7b / 8a 8b	F		X		THIS SH
		B	X			SPARE

SCHEME NO.	FAN NUMBER	FAN DESCRIPTION	FAN HP	RELAY LOC	STARTER LOC	CONTROL SWITCH NUMBER	CONTROL SWITCH LOC.	ESS CHAN	F/C	TEMP SWITCH		PRESS. DIFF SWITCH	TIME DELAY RELAY	DSL GEN INTLK NUMBER	DSL GEN INTLK CONTACT	DSL GEN INTLK DWG
OV5100	OV512A	EMER DSL GEN A VENT SUP FAN	40	OC577A	08516062	HS08271A	OC681	A/G	AK/AP/GP	TSH08271A	TSL08271A	PDSL08271A	62FSLXD8271A	OC521A	4X1 & 6	4-30-124(1)(5)
OV5101	OV512B	EMER DSL GEN B VENT SUP FAN	40	OC577B	08526062	HS08271B	OC681	B/K	BK/BP/KP	TSH08271B	TSL08271B	PDSL08271B	62FSLXD8271B	OC521B		
OV5102	OV512C	EMER DSL GEN C VENT SUP FAN	40	OC577C	08536062	HS08271C	OC681	C/L	CK/CP/LP	TSH08271C	TSL08271C	PDSL08271C	62FSLXD8271C	OC521C		
OV5103	OV512D	EMER DSL GEN D VENT SUP FAN	40	OC577D	08546062	HS08271D	OC681	D/M	DK/DP/MP	TSH08271D	TSL08271D	PDSL08271D	62FSLXD8271D	OC521D		

TERMINAL BOX NUMBER	42X RELAY LOCATION	42X RELAY DESIGNATION	TERMINAL NUMBERS OC681								ALARM WINDOW	ALARM WINDOW	ALARM DWG
TB1215	08516062	42X-516062	10-50	10-51	10-52	10-53	10-54	10-55	10-56		OC681 I	15-1	E-332 SH 4
TB1207	08526062	42X-526062	5-26	5-27	5-28	5-29	5-30	5-31	5-32		OC681 II	15-1	E-332 SH 8
TB1209	08536062	42X-536062	16-01	16-02	16-03	16-04	16-05	16-06	16-07		OC681 I	15-2	E-332 SH 4
TB1210	08546062	42X-546062	15-01	15-02	15-03	15-04	15-05	15-06	15-07		OC681 II	15-2	E-332 SH 8

REFERENCE DWGS.	
BECHTEL NO.	PL NO.
E-42	A-107191
V-102	B-106522

NO.	DATE	REVISIONS	BY	CHK	DESIGN ENG'G	CHKD ENG'G	APP'D
9	9/5/79	REVISED FUSE RATING PER 'AS BUILT' (DCR 431) (SPR 1259)	JJC	KM	MM		
8	7/16/79	REVISED TERM. NOS TO AGREE WITH CONNECTION LIST (SPR 1147)	JJC	KM	MM		
7	4/27/79	ADD WIRING FROM CONTACT TO TB (PNL OC521A,B,C,D) PER ITEM 10 BELOW	JJC	KM	MM		
6	3/7/78	ADD TERM NOS., INCORP SDDR-REQ'S & SCR 0248 & 3101 AS SHOWN	JJC	KM	MM		
5	6/6/77	INCORP DCN 1 (DCP 309 & REV 0) (DCP 309 REV 1) & DCP 309 REV (2) (DCP 309 REV 3) & (DCP 309 REV 4) (DCP 309 REV 5) & (DCP 309 REV 6)	JJC	KM	MM		
4	4/1/77	REVISED TO INCORP VEN 3804	GWD	KM	JJ	TC	
3	1/14/74	ISSUED FOR CONSTRUCTION	JB	NT WSS	RB	DR EXX	DR MNR

SCALE	DESIGNED	DRAWN	CHECKED
NONE	J. BURROR		

PENNSYLVANIA POWER & LIGHT COMPANY
ALLENTOWN, PENNSYLVANIA
SUSQUEHANNA STEAM ELECTRIC STATION – UNIT 1, UNIT 2

BECHTEL – SAN FRANCISCO

SCHEMATIC DIAGRAM HVAC DIESEL GENERATOR BLDG VENT SYS VENT SUPPLY FANS - COMMON

JOB No.	DRAWING No.	REV.
8856	E-193 SH 1	9

D-107342 SH 1

P.R.C. APERTURE CARD

Docket # 50-387 50-388 0117
Control # 8001
Date 3/10/80 of Document:
REGULATORY DOCKET FILE

UNCONTROLLED DOCUMENT FOR REFERENCE ONLY

GWARD SCHEMDGBVENTSYS

24X

I certify that the microfilmed image contained on this microform were made in the normal and regular course of business. This is a true, full, correct and complete reproduction and replacement for and/or in lieu of original documents generated by the Bechtel group of companies.

Signed: DANNY Camera Operator Date 8-13-80 Camera Type

D

This drawing and the design it covers are the property of BECHTEL. They are merely loaned and on the borrower's express agreement that they will not be reproduced, copied, loaned, exhibited, nor used except in the limited way and private use permitted by any written consent given by the lender to the borrower.

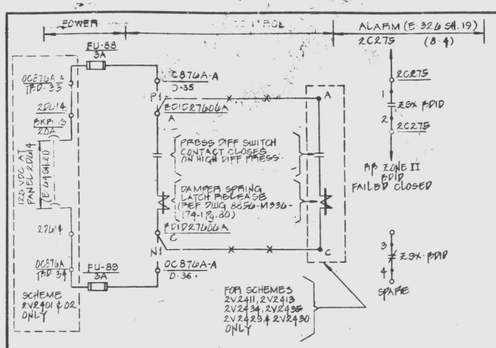

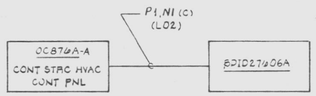

F/C - EK

BACKDRAFT ISOLATION DAMPERS BDID27606A (3)

SCHEME NO. 2V2401 (I)

SCHEME NO.	DAMPER	FUSE NO.	FUSE LOC	ESS DIV	F/C	TERM NOS
2V2401	BDID27606A	FU-88, 89	0C876A-A	I	EK	D-35 D-36
02	06B	82, 83	0C876B-A	II	FK	D-35 D-36
03	05A	90, 91	0C876A-A	I	EK	D-37 D-38
04	05B	84, 85	0C876B-A	II	FK	D-37 D-38
05	03A	92, 93	0C876A-A	I	EK	D-39 D-40
06	04A	94, 95				D-41 D-42
07	10A	96A, 97A				D-43 D-44
08	08A	98, 99				D-45 D-46
09	09A	100, 101	↓	↓	↓	D-47 D-48
10	03B	86, 87	0C876B-A	II	FK	D-39 D-40
11	07B	88, 89	↓	↓	↓	D-41 D-42
12	11B	90, 91	↓	↓	↓	D-43 D-44
13	07A	102, 103	0C876A-A	I	EK	D-49 D-50
14	11A	104, 105	↓	↓	↓	D-51 D-52
15	12A	106, 107	↓	↓	↓	D-53 D-54
16	12B	92, 93	0C876B-A	II	FK	D-45 D-46
17	13A	108, 109	0C876A-A	I	EK	D-55 D-56
↓ 18	↓ 13B	↓ 94, 95	0C876B-A	II	FK	D-47 D-48
2V2423	BDID27606A	FU-114, 115	0C876A-A	I	EK	D-57 D-58
24	13B	100, 101	0C876B-A	II	FK	D-49 D-50
25	03B	102, 103	↓	↓	↓	D-51 D-52
26	04B	104, 105	↓	↓	↓	D-53 D-54
35	7A	110, 111	0C876A-A	I	EK	D-59 D-60
36	15A	112, 113	↓	↓	↓	D-61 D-62
29	14B	110, 111	0C876B-A	II	FK	D-55 D-56
30	15B	112, 113				D-57 D-58
31	10B	114, 115				D-59 D-60
↓ 32	↓ 68A	↓ 116, 117	↓	↓	↓	D-61 D-62

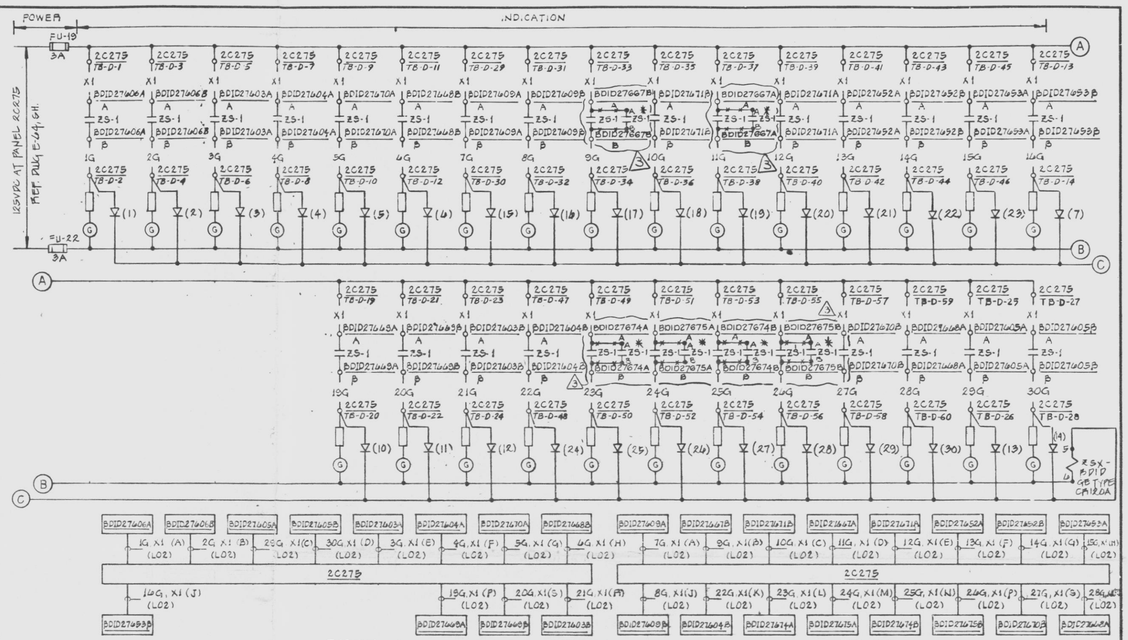

F/C - NK

BACKDRAFT ISOLATION DAMPERS

SCHEME NO. 2V2400

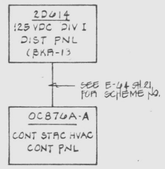

F/C - EK

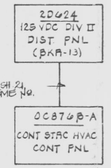

F/C - FK

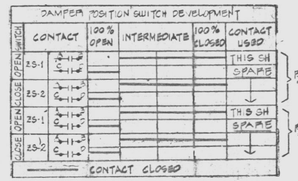

TYPICAL ALL DAMPERS THIS SH.

* FOR BDID27606A & B, 27674A & B AND 27675A & B ONLY (3)

UNCONTROLLED DOCUMENT FOR REFERENCE ONLY

REFERENCE DWG'S.	
BECHTEL NO.	PL. NO.
A-42	A-107191
V-146	B-104916
E-40	A-107189

NOTES:
1. TOM STANDARD SYMBOL FROM ELECTRICAL DWG SPEC 8850-E-92.
2. ADDED TERMINAL BLOCKS, DIODES & FUSES PURCHASED FROM E-40 SH.82.
3. RELAY 2SX-PBID PURCHASED FROM E-40 SH.54.

F/C - NK

BACKDRAFT ISOLATION DAMPERS

SCHEME NO. 2V2433

PRC APERTURE CARD
Docket # 50-387
Control # 8303220117-12
Date 2/10/83 of Document
REGULATORY DOCKET FILE

D

NO.	DATE	REVISIONS	BY	CHK	DESIGN SUPV.	ENG MGR	APP'D
4	11/2/87	REMOVED TERMINAL PT. 8 ADDED JUMPER. 4 MISC. CHANGES (DCR 42)	KEN GRAY	MP			
3	7/14/87	ADDED DIODES & TERMINAL BLOCKS, REVISED DETAIL 10S, & ADDED 2SX-PBID. REMOVED HOLD OR PRESS. SCHEME (DCR 84 & 87)	TPS	MP	DE		
2	9/9/87	DELETE 2V2419, 20, 21, 22, 27 & 28. ADD 2V2433 & 34. REVISED AS SHOWN PER LOGIC DWG V-176 SH 10/1	MPS				
1	4/1/86	ISSUED FOR CONSTRUCTION	MPS	JW			

SCALE: NONE — DESIGNED: J. BURROR — DRAWN: M. P. SANTOS

PENNSYLVANIA POWER & LIGHT COMPANY
ALLENTOWN, PENNSYLVANIA
SUSQUEHANNA STEAM ELECTRIC STATION – UNIT 1, UNIT 2

BECHTEL – SAN FRANCISCO

SCHEMATIC DIAGRAM HVAC REACTOR BLDG VENT SYSTEM BDID'S UNIT 2

JOB No.	DRAWING No.	REV.
8856	E-192 SH40	3

G2C21 SCHEM REAC BLDG VENT SYS W D-107341 SH40

22 x 34 "D" SIZE

24X

I certify that the microfilmed image contained on this microform were made in the normal and regular course of business. This is a true, full, correct and complete reproduction and replacement for and/or in lieu of original documents generated by the Bechtel group of companies.
Signed _____ Date 12-3-87 Camera Type _____
Camera Operator

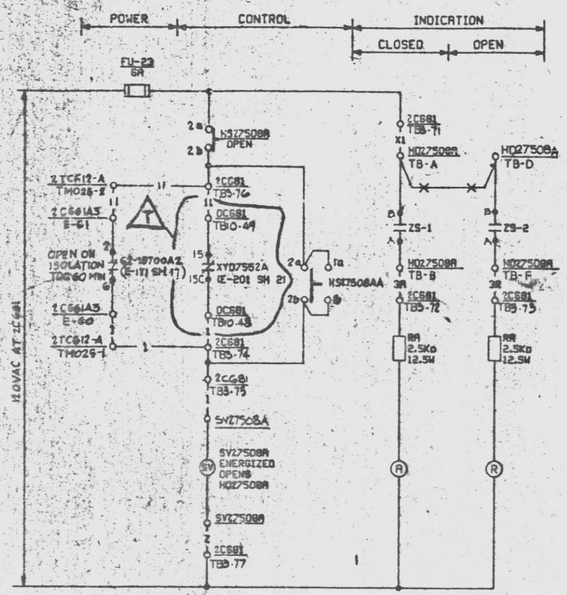

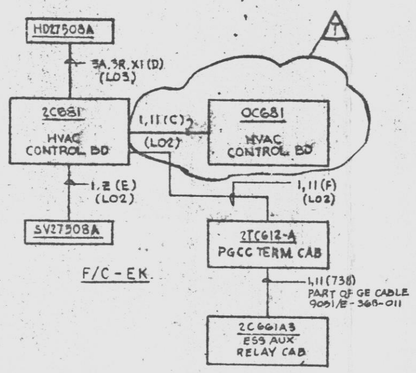

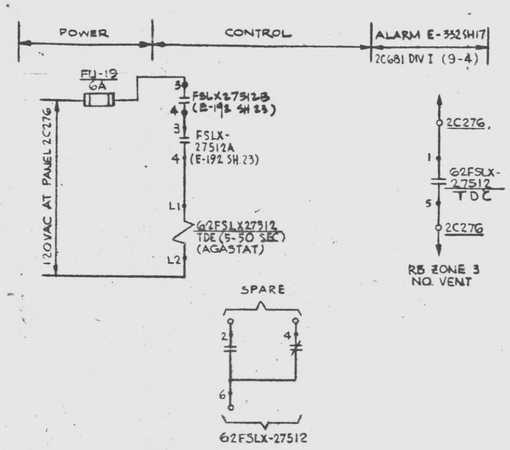

REACTOR BLDG ZONE III AIR FLOW

SCHEME 2V2657
(SEE TABLE A)

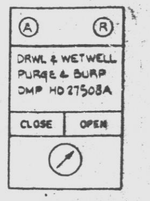

SWITCH DEVELOPMENT

BLOCK NO.	CONTACT NO.		POSITION OPEN	POSITION CLOSE	DWG. NO.
TOP	1a 1b / 2a 2b	F		X	SPARE
		B	X		THIS DWG.

SELECTOR SWITCH: HS27508A, HS27508B

GE TYPE CR2940
MAINTAINED CONTACTS

DAMPER POSITION SWITCH DEVELOPMENT

SWITCH	CONTACT NO.	100% OPEN	INTERMEDIATE	100% CLOSED	CONTACT USED
ZS-1	A 1 2 B / C 3 4 D / E 5 6 F				THIS SH.
					SPARE
ZS-2	G 7 8 H / J 9 10 K / L 11 12 M				SPARE
					THIS SH.

CONTACT CLOSED

AIR OPERATED DAMPER : HD27508A, HD27508B

DRYWELL & SUPPCHAM DAMPER HD27508A ISO SIGNAL BYPASS

SWITCH DEVELOPMENT

BLOCK NO.	CONTACT NO.		SC	NORM	DW	DWG. NO.
TOP	1a 1b / 2a 2b	F			X	THIS DWG.
		B	X			THIS DWG.
BTM	3a 3b / 4a 4b	F			X	E-171 SH. 17 ○
		B	X			E-171 SH. 17 ○
TOP	5a 5b / 6a 6b	F			X	E-185 SH. 29 △
		B	X			E-185 SH. 25 △
BTM	7a 7b / 8a 8b	F			X	E-332 SH. 16 □
		B	X			E-332 SH. 16 □

DW | NORMAL | SC

2C681 FV

CONTROL SWITCH: HS-27508AA, HS-27508BA
GE TYPE CR2940
MAINTAINED CONTACTS
KEY REMOVABLE IN NORMAL POSITION

○ E-171 SH. 20
△ E-185 SH. 24 } FOR HS-27508BA
□ E-332 SH. 19

DRYWELL BURP & PURGE LINE ISOLATION DAMPER HD27508A

SCHEME NO. 2V2542 [I]
(SEE TABLE B)

NOTES:
1. FOR STANDARD SYMBOLS FOR ELECTRICAL DIAGRAMS SEE DWG. E-42.

PRC APERTURE CARD

UNCONTROLLED DOCUMENT FOR REFERENCE ONLY

UNIT 1 AND COMMON PORTIONS OF THIS DRAWING ARE UNDER PP&L ADMINISTRATIVE CONTROL. NO CHANGES CAN BE MADE TO THESE PORTIONS WITHOUT PRIOR PP&L APPROVAL.

TABLE A

SCHEME NO.	ZONE	FUSE NO.	FUSE LOC.	TIME DELAY RELAY	INTERLOCKS RELAY	CONTACTS	DWG	RELAY	CONTACTS	DWG	PANEL	WINDOW	DWG
2V2657	III	FU-19	2C276	62FSLX27512	FSLX27512A	3, 4	E-192 SH.23	FSLX27512B	3, 4	E-192 SH.23	2C681 DIV I	9-4	E-332 SH 17
2V2658	II	FU-20	2C276	62FSLX27522	FSLX27522A	1, 2	E-192 SH41	FSLX27522B	1, 2	E-192 SH.41	2C681 DIV I	9-3	E-332 SH.17

TABLE B

SCHEME NO.	DAMPER	CONTROL SWITCH NUMBER	CONTROL SWITCH LOC	FUSE NO.	ESS DIV	F/C	SOLENOID VALVE	INTLKS RELAY	INTLKS LOC	INTLKS CONTACTS	INTLKS DWG	TERMINAL NUMBERS 2C681								OCGBI	
2V2542	HD27508A	HS27508A	2C681	FU-23	I	EK	SV27508A	XY07552A	OC681	15,15C	E-201 SH 2	TB3-71	TB3-72	TB3-73	TB3-74	TB3-75	TB3-76	TB3-77	TB10-48	TB10-49	
2V2543	HD27508B	HS27508B	2C681	FU-24	II	FK	SV27508B	XY07552B	OC681	15,15C	E-201 SH 4	TB8-71	TB8-72	TB8-73	TB8-74	TB8-75	TB8-76	TB8-77	TB5-24	TB5-23	

INTERLOCKS RELAY	LOC	CONTACTS	SEL SW	LOC	CONTACTS	PANEL	TERMINAL NO.		TERMINAL CAB.	TERMINAL	G.E. CABLE
62-18700A2	2C66IA3	2,6	HS-27508AA	2C681	1a 1b 2a 2b	2C66IA3	E-61	E-60	2TC612-A	TM025-2 TM025-1	9051/E368-011
62-18700B2	2C66IB3	2,6	HS-27508BA	2C681	1a 1b 2a 2b	2C66IB3	B-43	B-42	2TC622-D	TM052-1 TM052-11	8952/E368-059

T

Doc # 50-387
Control # 830322011 7-112
Date 3/18/83 of Document:
REGULATORY DOCKET FILE

REFERENCE DWGS.

BECHTEL NO.	PL NO.
E-42	A-107191
V-175	B-106515
E-201	D-107350

NO.	DATE	REVISIONS	BY	CHK	DESIGN SUPV	ENGR	PROJ ENGR	APP
5	3/21/83	REV PER DCP 23.2 & REV WIRE # / TERM TO TB5-24, 23	JL					
4	12/4/81	REV PER DCP 23.2 & FOR B-2760 AND ADDED TB7 TO TERM NOS (DCP 3)	JC					
3	4/4/81	ADDED TERMINAL NUMBERS & RELEASED HOLD	BJD	BJB				
2	11/19/80	ISSUED "AS BUILT"	JLD	JD				
1	1/10/80	ISSUED FOR CONSTRUCTION	MLT	BJB				

SCALE NONE | DESIGNED J. BURROR | DRAWN

PENNSYLVANIA POWER & LIGHT COMPANY
ALLENTOWN, PENNSYLVANIA
SUSQUEHANNA STEAM ELECTRIC STATION – UNIT 1, UNIT 2

BECHTEL – SAN FRANCISCO

SCHEMATIC DIAGRAM HVAC
REACTOR BLDG VENT SYSTEM
DRYWELL BURP & PURGE – UNIT 2

JOB No.	DRAWING No.	REV.
8856	E-192 SH 39	5

D-107341 SH 39

G2C21 | SCHEM REAC BLDG VENT SYS | W

This drawing and the design it covers are the property of BECHTEL. They are mutually loaned and on the borrower's express agreement that they will not be reproduced, copied, loaned, assigned, sold, given, pledged to the United Way and patents, nor used in any manner detrimental to the interest of BECHTEL, nor used on any work not performed by BECHTEL, nor used for any purpose other than that for which they are furnished, except as may be permitted by any written consent given to the holder by BECHTEL.

24X

I certify that the microfilmed image contained on this microform were made in the normal and regular course of business. This is a true, full, correct and complete reproduction and replacement for and/or in lieu of original documents created by the Bechtel group of companies.
Signed J. RHEY Date 3/17/83 Camera Type MRG-1
Camera Operator

D

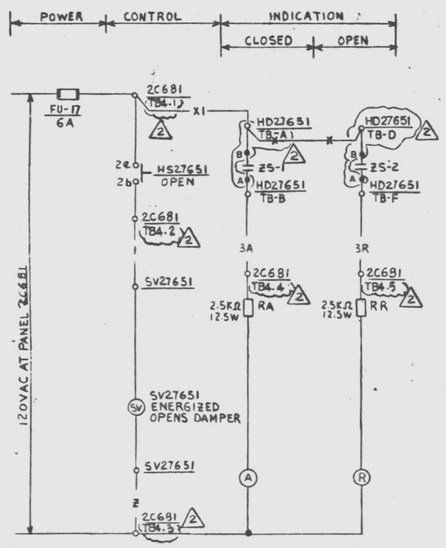

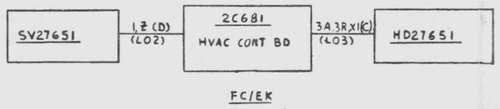

PRIMARY CONTAINMENT ISOLATION DAMPER HD27651

SCHEME NO 2V2570 I

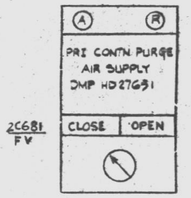

SWITCH DEVELOPMENT

BLOCK LOC	CONTACT NO.		POSITION OPEN	POSITION CLOSE	DWG NO.
TOP	1a 1b	F		X	SPARE
	2a 2b	B	X		THIS SH

SELECTOR SWITCH: HS27651
GE TYPE CR2940
MAINTAINED CONTACTS

DAMPER POSITION SWITCH DEVELOPMENT

SWITCH	CONTACT NO	100% OPEN	INTERMEDIATE	100% CLOSED	CONTACT USED
OPEN	ZS-1				THIS SH
					SPARE
CLOSED	ZS-2				SPARE
					THIS SH

2 —— CONTACT CLOSED

AIR OPERATED DAMPER: HD27651

NOTE:

1. FOR STANDARD SYMBOLS FOR ELECTRICAL DIAGRAM SEE E-42

PRC APERTURE CARD

UNCONTROLLED DOCUMENT FOR REFERENCE ONLY

REFERENCE DWG'S.	
BECHTEL NO.	PL. NO.
E-42	A-107191
V-175	B-106516

NO.	DATE	REVISIONS	BY	CH'K	DESIGN SUPV	ENG'R	PROJ. ENGR	APP'S
2	12/4/81	REV. LIMIT SW DEVELOPMENT AND ADD. "TB" TO TERM. NO.'S (DCR 42)	RBL	JLB				
1	10/20/79	ADDED TERMINAL NUMBERS & RELEASED HOLD	BW	JLB				
0	11/1/76	ISSUED FOR CONSTRUCTION	JB					

SCALE NONE | DESIGNED J.BURROR | DRAWN | CHIEF ENGR.

PENNSYLVANIA POWER & LIGHT COMPANY
ALLENTOWN, PENNSYLVANIA
SUSQUEHANNA STEAM ELECTRIC STATION – UNIT 1, UNIT 2

BECHTEL – SAN FRANCISCO

SCHEMATIC DIAGRAM HVAC
REACTOR BLDG VENT SYSTEM
PRI CONTAINMENT ISO DAMP UNIT 2

JOB No.	DRAWING No.	REV.
8856	E-192 SH 36	2

D-107341 SH36

Docket # 50-387
Control # 8303220117-114
Date 3/10/83 of Document:
REGULATORY DOCKET FILE

62C21 SCHEM REAC BLDG VENT SYS

This drawing and the design it covers are the property of BECHTEL. They are merely loaned and on the borrower's express agreement that they will not be reproduced, copied, loaned, exhibited, nor used except in the limited way and private use permitted by any written consent given by the lender to the borrower.

24X

I certify that the microfilmed image contained on this microform were made in the normal and regular course of business. This is a true, full, correct and complete reproduction and replacement for and/or in lieu of original document generated by the Bechtel group of companies.
Signed: [signature] Date: 12-15-81 Camera Type: MRG I
Camera Operator

D

This drawing and the design it covers are the property of BECHTEL. They are merely loaned and on the borrower's express agreement that they will not be reproduced, copied, loaned, exhibited, nor used except in the limited way and private use permitted by, any written consent given by the lender to the borrower.

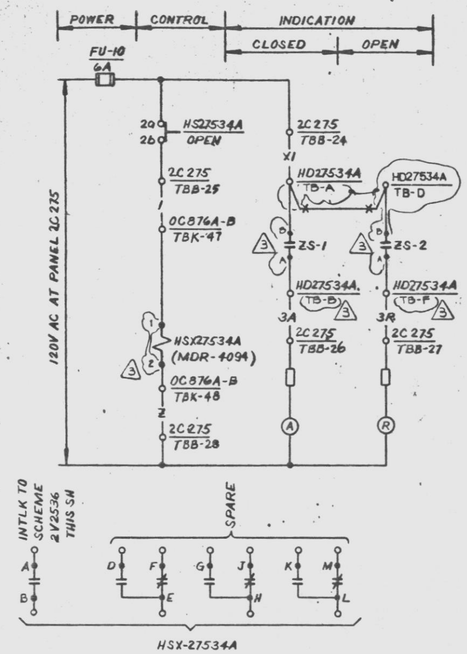

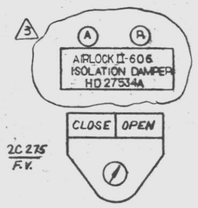

SWITCH DEVELOPMENT

BLOCK LOC	CONTACT Nº		POSITION OPEN	POSITION CLOSE	DWG Nº
TOP	1a 1b	F		X	SPARE
	2a 2b	B	X		THIS SH

SELECTOR SWITCH: HS-27534A,B,C,D,E,F,G,HI
GE TYPE CR2940
MAINTAINED CONTACT

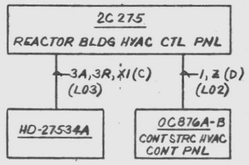

F/C-NK

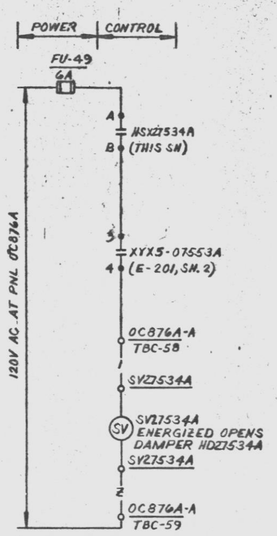

AIRLOCK ISOLATION DAMPER SV-27534A

SCHEME Nº 2V2536 [1]
(SEE TABLE B)

DAMPER POSITION SWITCH DEVELOPMENT

	CONTACT Nº	100% OPEN	INTERMEDIATE	100% CLOSED	CONTACT USED
OPEN	ZS-1 A-B, C-D				THIS SH
					SPARE
CLOSED	ZS-2 C-D, A-B				SPARE
					THIS SH

CONTACT CLOSED

AIR OPERATED DAMPER: HD-27534A,B,C,D,E,F,G,HI

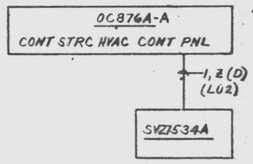

F/C-EK

RB ZONE III AIRLOCK II-606 ISOLATION DAMPER CONTROL

SCHEME Nº 2V2589
(SEE TABLE A)

NOTE:
1. FOR STANDARD SYMBOLS FOR ELECTRICAL DIAGRAM SEE E-42

TABLE A

SCHEME Nº	AIR LOCK	DAMPER	CONTROL SWITCH Nº	CONTROL SWITCH LOC	FUSE Nº	FUSE LOC	INTLK'S Nº	INTLK'S CONTACTS	INTLK'S SCHEME	INTLK'S DWG	TERMINAL Nºs								
2V2589	II-606	HD27534A	HS27534A	2C275	FU-10	2C275	HSX27534A	A,B	2V2536	THIS SH	2C275	B-24	B-25	B-26	B-27	B-28	0C876A-B	K-47	K-48
2V2590	II-611	B	B	↓	11	↓	B		2V2537		↓	B-29	B-30	B-31	B-32	B-33		K-49	K-50
2V2591	II-707	C	C	2C276	22	2C276	C		2V2538		2C276	D-13	D-14	D-15	D-16	D-17		K-51	K-52
2V2592	II-803	D	D	↓	23	↓	D		2V2539		↓	D-18	D-19	D-20	D-21	D-22		K-53	K-54
2V2593	II-805	E	E	↓	24	↓	E		2V2567		↓	D-23	D-24	D-25	D-26	D-27		K-55	K-56
2V2594	II-617	F	F	2C275	15	2C275	F		2V2568		2C275	B-34	B-35	B-36	B-37	B-38		K-57	K-58
2V2900	C-806	G	G	2C276	25	2C276	G		2V2910		2C276	B-49	B-50	B-51	B-52	B-53		K-59	K-60
2V2901	II-618	H	H	2C275	12	2C275	H		2V2911		2C275	B-39	B-40	B-41	B-42	B-43	↓	K-61	K-62
2V2902	II-609	HD27534I	HS27534I	2C276	FU-26	2C276	HSX27534I	↓	2V2912	↓	2C276	B-56	B-55	B-57	B-58	B-54	0C876A-B	K-67	K-68

[4]

TABLE B

SCHEME Nº	DAMPER	SOLENOID VALVE	FUSE Nº	FUSE LOC	ESS DIV	F/C	INTLKS RELAY	INTLKS CONTACTS	INTLKS DWG	INTLKS RELAY	INTLKS CONTACTS	INTLKS DWG	TERM. Nºs 0C876A	
2V2536	HD27534A	SV27534A	FU-49	0C876A-B	I	EK	HSX27534A	A,B	THIS SH	XYX5-07553A	3,4	E-201, SH. 2	C-58	C-59
2V2537	B	B	50				B				5,6		C-60	C-61
2V2538	C	C	51				C				7,8		C-62	C-63
2V2539	D	D	52				D				9,10		C-64	C-65
2V2567	E	E	53				E			↓	11,12		C-66	C-67
2V2568	F	F	54				F			XYX6-07554	1,2		C-68	C-69
2V2910	G	G	59				G			↓	5,6		C-70	C-71
2V2911	↓ H	↓ H	↓ 60				H			↓	7,8		D-63	D-64
2V2912	HD27534I	SV27534I	FU-150	↓	↓	↓	HSX27534I	↓	↓	XYX5-07553A	1,2	↓	B-70	B-71

PRC APERTURE CARD

UNCONTROLLED DOCUMENT FOR REFERENCE ONLY

REFERENCE DWG'S.	
BECHTEL NO.	PL. NO.
V-175	B-106515
E-201	D-107350
E-42	A-107191
[3] M-336A-58	FF108860
M334-52	FF108840

NO.	DATE	REVISIONS	BY	CHK	DESIGN SUPV	ENG	PROJ MGR	APP'D
[3]	11/1/83	REVISED TO ADD NAMEPLATE, REV. AIRLOCK LOCATION, INCORP DCN #1 (DCR 9)	SRM	EJV	DAS			
[2]	3/22/77	ADDED SCHEMES 2V2902 & 2V2912, ADDED TERM. Nºs & REVISED AS SHOWN	FAT	JAB				
[1]	10/29/77	REVISED AS SHOWN	MPS	KEB	WJ			
[0]	7/1/76	ISSUED FOR CONSTRUCTION	JB	WJ				

SCALE NONE | DESIGNED J. BURROR | DRAWN

PENNSYLVANIA POWER & LIGHT COMPANY
ALLENTOWN, PENNSYLVANIA
SUSQUEHANNA STEAM ELECTRIC STATION — UNIT 1, UNIT 2

BECHTEL — SAN FRANCISCO

SCHEMATIC DIAGRAM-HVAC
REACTOR BLDG VENT SYSTEM
AIRLOCK ISOLATION DAMPERS UNIT-2

JOB No.	DRAWING No.	REV.
8856	E-192 SH35	3

D-107341 SH 35

Docket # 50-387
Control # 8303220117 8115
Date 3/10/83 of Document:
REGULATORY DOCKET FILE

G2C21 SCHEM REAC BLDG VENT SYS W

24X

I certify that the microfilmed image contained on this microform were made in the normal and regular course of business. This is a true, full, correct and complete reproduction and replacement for and/or in lieu of original documents generated by the Bechtel group of companies.
Signed _____ Camera Operator Date 3-4-83 Camera Type MRC I

D

This drawing and the design it covers are the property of BECHTEL. They are merely loaned and on the borrower's express agreement that they will not be reproduced, copied, loaned, exhibited, nor used except in the limited way and private use permitted by any written consent given by the lender to the borrower.

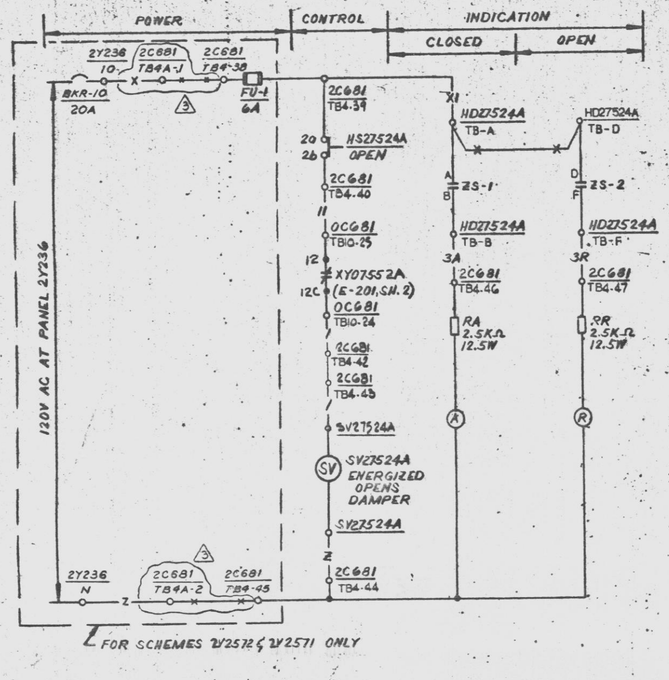

RB ZONE II ISOLATION DAMPER HD-27524A [I]

SCHEME Nº 2V2572

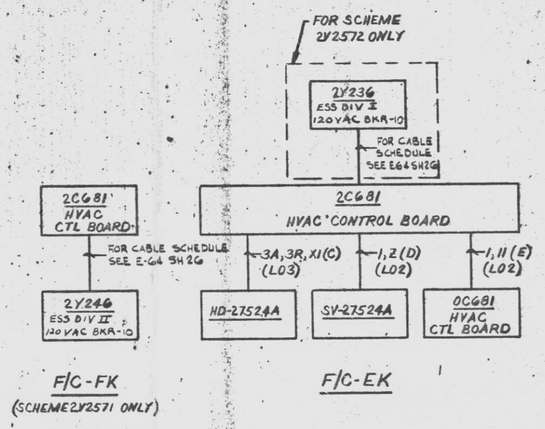

F/C-FK
(SCHEME 2Y2571 ONLY)

F/C-EK

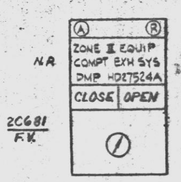

SWITCH DEVELOPMENT

BLOCK LOC	CONTACT Nº		POSITION OPEN	POSITION CLOSE	DWG Nº
TOP	1a, 1b	P		X	SPARE
	2a, 2b	B	X		THIS SH

SELECTOR SWITCH: HS-27524A & B
HS-27576A & B
HS-27586A & B
HS-27502A & B
HS-27514A & B
HS-27564A & B

GE TYPE CR2940
MAINTAINED CONTACTS

DAMPER POSITION SWITCH DEVELOPMENT

DAMPER	CONTACT Nº		100% OPEN	INTERMEDIATE	100% CLOSED	CONTACT USED
OPEN ZS-1	A	B				THIS SH
	C					SPARE
CLOSED ZS-2	D	E				SPARE
	F					THIS SH

CONTACT CLOSED

AIR OPERATED DAMPER:
TYPICAL FOR ALL ON THIS SHEET

NOTE:
1. FOR STANDARD SYMBOLS FOR ELECTRICAL DIAGRAM SEE DWG E-42

SCHEME Nº	DAMPER Nº	DAMPER	CONTROL SWITCH Nº	CONTROL SWITCH LOC	FUSE	ESS DIV	F/C	SOLENOID VALVE	INTLK'S RELAY	INTLK'S CONTACTS	INTLK'S DWG	TERMINAL Nº'S
2V2572	HD27524A		HS27524A	2C681	FU-1	I	EK	SV27524A	XY07552A	12,12C	E-201 SH. 2	TB4A-1 / 2C681 / TB4-38
1	24B		24B		2	II	FK	24B		B	12,12C	4
3	76A		76A		3	I	EK	76A		A	13,13C	2
4	76B		76B		4	II	FK	76B		B	13,13C	4
6	86A		86A		5	I	EK	86A		A	14-14C	2
5	86B		86B		6	II	FK	86B		B	14-14C	4
8	02A	RB ZONE III ISOLATION DAMPER	02A		7	I	EK	02A	XY07553A	A	13-13C	2
7	02B		02B		8	II	FK	02B		B	13-13C	4
2V2580	14A		14A		9	I	EK	14A		A	14-14C	2
2V2579	14B		14B		10	II	FK	14B		B	14-14C	4
2V2382	64A		64A		11	I	EK	64A		A	15-15C	2
1	64B		64B		12	II	FK	64B		B	15-13C	4

TERMINAL Nº'S																							
3	2C681																					OC681	
TB4A-1	TB4-39	TB4-40	TB4-41	TB4-42	TB4-43	TB4-44	TB4A-2	TB4-45	TB4-46	TB4-47	TB10-24	TB10-25
TB9A-1	9-39	9-40	9-41	9-42	9-43	9-44	TB9A-2	9-45	9-46	9-47	5-12	5-13
	4-39	4-40	4-41	4-42	4-43	4-44		4-45	6-57	6-58	10-26	10-27
	9-50	9-51	9-52	9-53	9-54	9-55		9-56	9-57	9-58	5-14	5-15
	3-2	3-3	3-4	3-5	3-6	3-7		3-8	3-9	3-10	10-28	10-29
	8-2	8-3	8-4	8-5	8-6	8-7		8-8	8-9	8-10	TB9-22	TB9-23
	2-30	2-31	2-32	2-33	2-34	2-35		2-36	2-37	2-38	TB10-30	TB10-31
	7-30	7-31	7-32	7-33	7-34	7-35		7-36	7-37	7-38	5-16	5-17
	3-50	3-51	3-52	3-53	3-54	3-55		3-56	3-57	3-58	10-32	10-33
	8-50	8-51	8-52	8-53	8-54	8-55		8-56	8-57	8-58	5-18	5-19
	3-29	3-26	3-28	3-29	3-30				3-32	3-33	10-34	10-35
	18-25	18-26	18-28	18-29	18-30				18-32	18-33	TB9-20	TB9-21

REFERENCE DWG'S.	
BECHTEL NO.	PL. NO.
V-2175	B-177266
E-42	A-107191
E-201	D-107350

	DATE	REVISIONS	BY	CHK	DESIGN SUPV	ENGR	PROJ ENGR	APPR
5	4/15/82	REVISED TO INCORP. FCR-2-7695 AND PER DCR 42	ABL	TH				
4	8/1/81	ADDED TERM. NOS. (PCR 48)	TMA					
3	5/5/81	ADDED TERMINAL NUMBERS & RELEASED HOLD	BJO					
2	7/1/76	ISSUED FOR CONSTRUCTION	JB					

SCALE NONE | DESIGNED J. BURROR | DRAWN

PENNSYLVANIA POWER & LIGHT COMPANY
ALLENTOWN, PENNSYLVANIA
SUSQUEHANNA STEAM ELECTRIC STATION – UNIT 1, UNIT 2

BECHTEL – SAN FRANCISCO

SCHEMATIC DIAGRAM-HVAC
REACTOR BLDG VENT SYSTEM
ZONE II & III ISOLATION DAMPER UNIT 2

JOB No.	DRAWING No.	REV.
8856	E-192 SH 34	3

D-107341 SH 34

P.R.C APERTURE CARD

UNCONTROLLED DOCUMENT FOR REFERENCE ONLY

Docket # 50-387
Control # 8303220172
Date 3/10/83 of Document:
REGULATORY DOCKET FILE

G2C21 SCHEM REAC BLDG VENT SYS W

24X

I certify that the microfilmed image contained on this microform were made in the normal and regular course of business. This is a true, full, correct and complete reproduction and replacement for and/or in lieu of original documents generated by the Bechtel group of companies.
Signed DANNY Date 12-20-82 Camera Type MRG1
Camera Operator

D

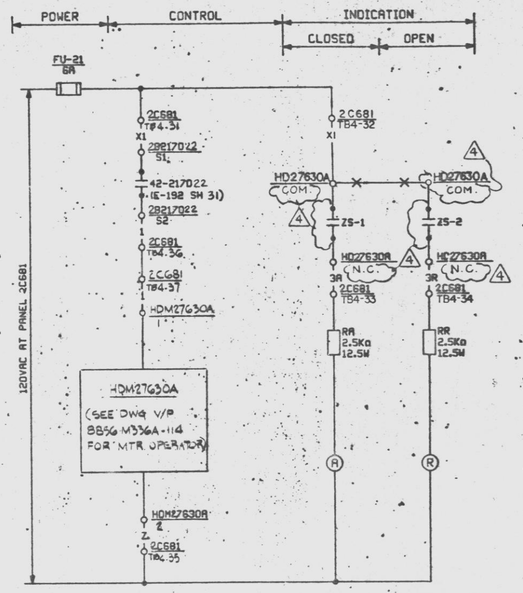

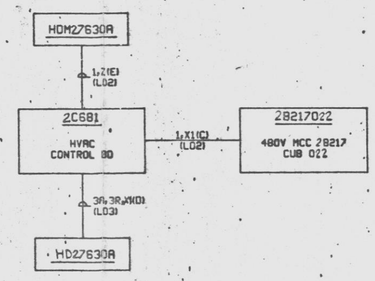

F/C-EK

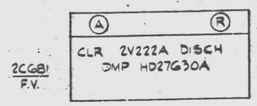

DAMPER POSITION SWITCH DEVELOPMENT

SWITCH	CONTACT NO.	100% OPEN	INTERMEDIATE	100% CLOSED	CONTACT USED
OPEN	ZS-1				THIS SH
					SPARE
CLOSED	ZS-2				SPARE
					THIS SH

CONTACT CLOSED

MOTOR OPERATED DAMPER: HD27630A, HD27630B

EMER SWGR COOLING DAMPER HD27630A

SCHEME NO. 2V2544 I

NOTES:

1. FOR STANDARD SYMBOLS FOR ELECTRICAL DIAGRAMS SEE DWG. E-42.

PRC APERTURE CARD

UNCONTROLLED DOCUMENT FOR REFERENCE ONLY

REFERENCE DWGS.	
BECHTEL NO.	PL NO.
E-42	A-107191
V-176	B-106516
V/P8856-M336A-114	FF-108860
V/P8856-M336A-58	FF-108860

SCHEME NO.	DAMPER	DAMPER MOTOR	FUSE NUMBER	FUSE LOC	ESS DIV	F/C	INTLKS STARTER LOC	INTLKS CONTACT	INTLKS DWG	TERMINAL NUMBERS 2C681						
2V2544	HD27630A	HDM27630A	FU-21	2C681	I	EK	2B217022	S1,S2	E-192 SH 31	TB4-31	TB4-32	TB4-33	TB4-34	TB4-35	TB4-36	TB4-37
2V2545	HD27630B	HDM27630B	FU-22	2C681	II	FK	2B227052	S1,S2	E-192 SH 31	TB9-31	TB9-32	TB9-33	TB9-34	TB9-35	TB9-36	TB9-37

No.	DATE	REVISIONS	BY	CHK	DESIGN SUPV	ENG'R	PROJ ENGR	APP'D
4	11/5/82	REVISED TO INCORP FCR-E-7725	RBL					
3	4/9/82	REVISED TO INCORP. FCR E-6839 AND DCR 42	NG					
2	12/2/81	REVISED TERM NOS. POS SW. DEVELOP (DCR 42), & INCORP. FCR E-5818.						
1	6/2/79	ADDED TERMINAL NUMBERS & RELEASED HOLDS	BW					
0	11/4/76	ISSUED FOR CONSTRUCTION	JB					

SCALE NONE | DESIGNED J. BURROR | DRAWN

PENNSYLVANIA POWER & LIGHT COMPANY
ALLENTOWN, PENNSYLVANIA
SUSQUEHANNA STEAM ELECTRIC STATION – UNIT 1, UNIT 2

BECHTEL – SAN FRANCISCO

SCHEMATIC DIAGRAM HVAC
REACTOR BLDG VENT SYSTEM
SWGR COOL DAMPERS – UNIT 2

JOB No.	DRAWING No.	REV.
8856	E-192 SH 32	4

D-107341 SH 32

Doc. #50-387
Control #8303220117-117
Date 4/10/83 of Document:
REGULATORY DOCKET FILE

G2C21 SCHEM REAC BLDG VENT SYS W

This drawing and the design it covers are the property of BECHTEL. They are merely loaned and on the borrower's express agreement that they will not be reproduced, copied, loaned, exhibited, nor used except in the limited way and private use permitted by any written consent given by the lender to the borrower.

4/76 D/P ARKWRIGHT NO. 2100-W005

22 X 34 "D" SIZE

24X

P.C. AKINS 11-10-82 MRG 1

D

This drawing and the design it covers are the property of BECHTEL. They are merely loaned and on the borrower's express agreement that they will not be reproduced, copied, loaned, exhibited, nor used except in the limited way and private use permitted by any written consent given by the lender to the borrower.

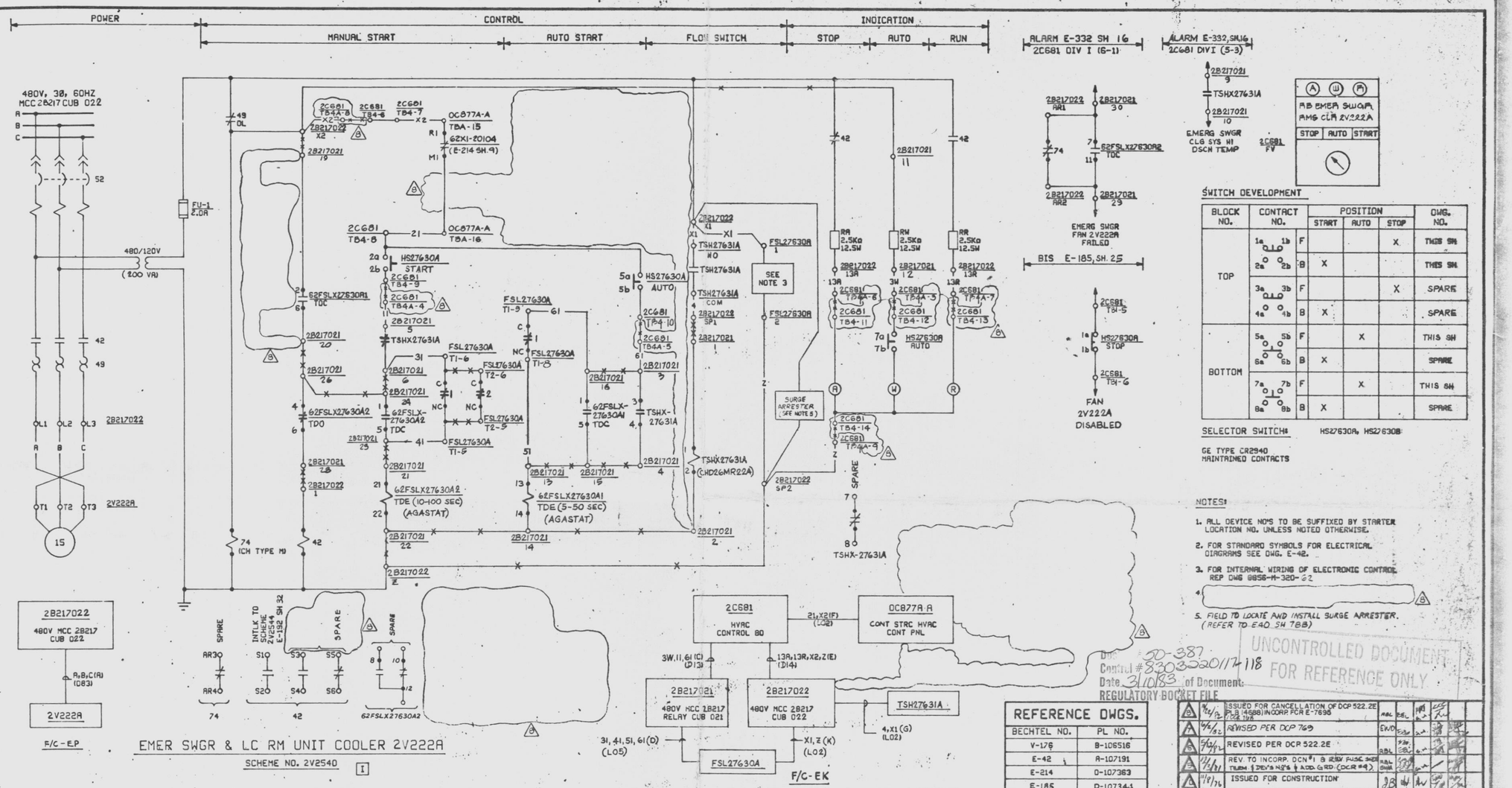

SWITCH DEVELOPMENT

BLOCK NO.	CONTACT NO.		POSITION START	POSITION AUTO	POSITION STOP	DWG. NO.
TOP	1a 1b	F			X	THIS SH
	2a 2b	B	X			THIS SH
	3a 3b	F			X	SPARE
	4a 4b	B	X			SPARE
BOTTOM	5a 5b	F		X		THIS SH
	6a 6b	B	X			SPARE
	7a 7b	F		X		THIS SH
	8a 8b	B	X			SPARE

SELECTOR SWITCH: HS27630A, HS27630B

GE TYPE CR2940
MAINTAINED CONTACTS

NOTES:

1. ALL DEVICE NO'S TO BE SUFFIXED BY STARTER LOCATION NO. UNLESS NOTED OTHERWISE.
2. FOR STANDARD SYMBOLS FOR ELECTRICAL DIAGRAMS SEE DWG. E-42.
3. FOR INTERNAL WIRING OF ELECTRONIC CONTROL REF DWG 8856-M-320-62
4.
5. FIELD TO LOCATE AND INSTALL SURGE ARRESTER. (REFER TO E40 SH 7B8)

SCHEME NO.	FAN NUMBER	FAN DESCRIPTION	FAN HP	STARTER LOC	CONTROL SWITCH NUMBER	CONTROL SWITCH LOC	ESS DIV	F/C	FLOW SWITCH	TIME DELAY RELAY NUMBER	TIME DELAY RELAY NUMBER	TIME DELAY RELAY LOC	AUX RELAY NUMBER	AUX RELAY LOC	TEMP SWITCH	CABLE CODES CABLE C	CABLE CODES CABLE E
2V2540	2V222A	EMER SWGR & LC RM UNIT CLR A	15	2B217022	HS27630A	2C681	I	EK/EP	FSL27630A	62FSLX27630A1	62FSLX27630A2	2B217021	TSHX27631A	2B217021	TSH27631A	D13	D14
2V2541	2V222B	EMER SWGR & LC RM UNIT CLR B	15	2B227052	HS27630B	2C681	II	FK/PP	FSL27630B	62FSLX27630B1	62FSLX27630B2	2B227051	TSHX27631B	2B227051	TSH27631B	L03	L05

SCHEMES INTLK'S STARTER	CONTACTS	SCHEME	DWG	INTLKS RELAY	LOC	CONTACTS	DWG	ALARM PANEL	WINDOW	DWG	TERMINAL NUMBERS 2C681										TERMINAL NUMBERS		BIS DWG	TERMINAL NOS 2C681	
2B217022	S1,S2	2V2544	E-192 SH 32	262XI-20104	OC877A-A	R1,M1	E-214 SH 9	2C681	(6-1) (5-3)	E-332 SH 16	TB4-6	TB4-7	TB4-8	TB4-9	TB4-10	TB4-11	TB4-12	TB4-13	TB4-14	TB4-15	OC877A-A	TBA-15	TBA-16	E-185 SH.25	TB1-5	TB1-6
2B227052	S1,S2	2V2545	E-192 SH 32	262XI-20204	OC877B-A	R1,M1	E-214 SH 9	2C681	(6-1) (5-3)	E-332 SH 19	TB9-6	TB9-7	TB9-8	TB9-9	TB9-10	TB9-11	TB9-12	TB9-13	TB9-14	OC877B-A	TBA-15	TBA-16	E-185 SH.26	TB6-9	TB6-10

REFERENCE DWGS. BECHTEL NO.	PL NO.
V-176	B-106516
E-42	A-107191
E-214	D-107363
E-185	D-10734-1
E118-84	FF1031B0

NO.	DATE	REVISIONS	BY	CHK'D	DESIGN SUPV	ENG'G	PROJ ENGR	APP'D
5	4/4/82	ISSUED FOR CANCELLATION OF DCP 522.2E PLS (4688) INCORP FOR E-7696	RBL	DBL	HM	DCF		
4	4/4/82	REVISED PER DCP 769	EWO					
3	5/4/81	REVISED PER DCR 522.2E	RBL	DBL	WJH			
2	11/1/81	REV. TO INCORP. DCN #1 & #2 REV FUSE SIZE TERM. IDENT'S NO'S & ADD GRD (DCR #4)	RBL	DWK				
1	11/1/76	ISSUED FOR CONSTRUCTION	JB					

SCALE NONE | DESIGNED J. BURROR | DRAWN

PENNSYLVANIA POWER & LIGHT COMPANY
ALLENTOWN, PENNSYLVANIA
SUSQUEHANNA STEAM ELECTRIC STATION – UNIT 1, UNIT 2

BECHTEL – SAN FRANCISCO

SCHEMATIC DIAGRAM HVAC REACTOR BLDG VENT SYS EMER SWGR RM UNIT COOLERS UNIT2

JOB NO.	DRAWING NO.	REV.
8856	E-192 SH 31	8

D-107341 SH 31

UNCONTROLLED DOCUMENT
FOR REFERENCE ONLY
50-387
Control # 8303220117-118
Date 3/10/83 of Document
REGULATORY DOCKET FILE

PRC
APERTURE
CARD

24X

This drawing and the design it covers are the property of BECHTEL. They are merely loaned and on the borrower's express agreement that they will not be reproduced, copied, loaned, exhibited, nor used except in the manner expressly permitted by any written consent given by Bechtel to the borrower.

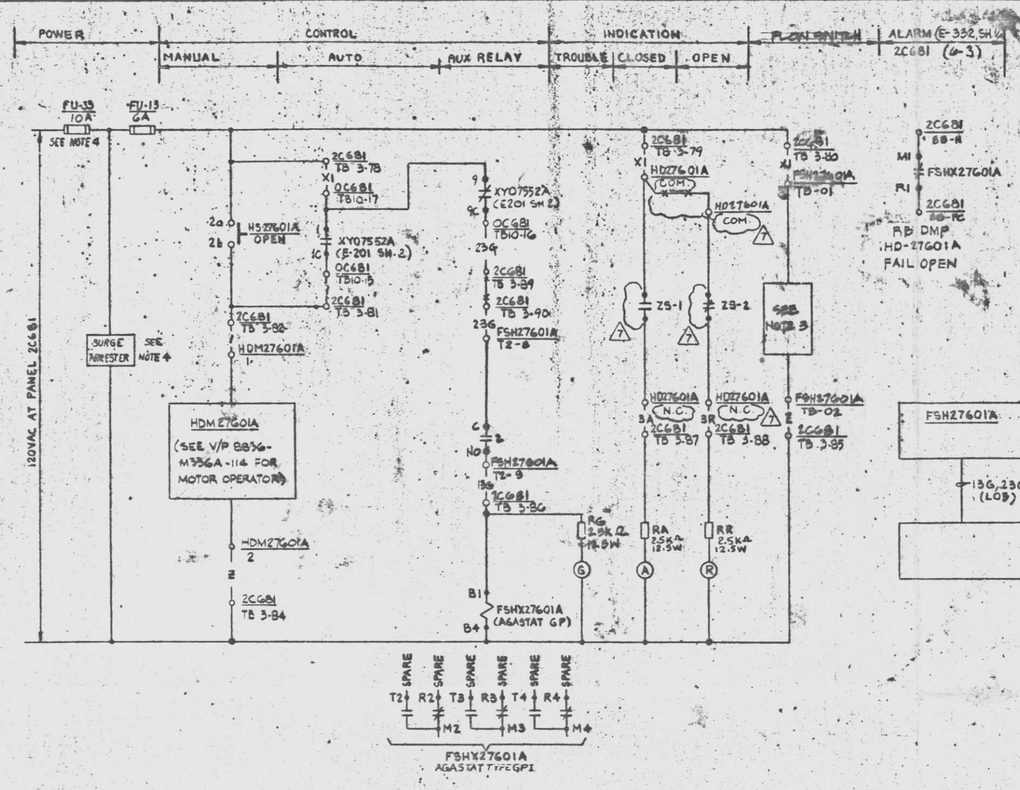

DMP HD27601A FAILED OPEN

A R

ZONE II FILT EXH TO RECIRC SYS DMP HD27601A

CLOSE | OPEN

SWITCH DEVELOPMENT

BLOCK No.	CONTACT No.	POSITION OPEN	POSITION CLOSE	DRAWING No.
TOP	1a 1b	F	X	SPARE
	2a 2b	S : X		THIS SH

SELECTOR SWITCH: HS-27601A, HS-27601B
GENERAL ELECTRIC TYPE CR2940
MAINTAINED CONTACT.

DAMPER POSITION SWITCH DEVELOPMENT

SWITCH	CONTACT	100% OPEN	INTERMEDIATE	100% CLOSED	CONTACT USED
OPEN	Z9-1				THIS SH
					SPARE
CLOSED	Z9-2				SPARE
					THIS SH

CONTACT CLOSED

MOTOR OPERATED DAMPER: HD27601A, HD27601B
HD27602A, HD27602B
HD27657A, HD27657B

RB ZONE 1 & 2 RECIRC ISOLATION DAMPER HD27601A

SCHEME № 2V2583 [II]

SCHEME №	DAMPER	MOTOR OPERATOR	ESS DIV	F/C	FUSE №	CONTROL SWITCH NUMBER	CONTROL SWITCH LOC	FUSE №	FLOW SWITCH	AUX RELAY	INTLK'S RELAY	INTLK'S CONTACTS	INTLK'S LOC	INTLK'S DWG	ALARM PNL	ALARM WINDOW	ALARM DWG
2V2583	HD27601A	HDM27601A	I	EK	FU-13	HS27601A	2C681	FU-33	FSH27601A	FSHX27601A	XY07552A	1.1C/3,9C	OC681	E-201 SH 2	2C681	G-3	E-332, SH.1C
2V2584	HD27601B	HDM27601B	II	FK	FU-14	HS27601B	2C681	FU-34	FSH27601B	FSHX27601B	XY07552B	↓	OC681	E-201 SH 4		↓	19
2V2585	HD27602A	HDM27602A	I	EK	FU-15	HS27602A	2C681	FU-33	FSH27602A	FSHX27602A	XY07552A	2.2C/10.0C	OC681	E-201 SH 2		G-4	1C
2V2586	HD27602B	HDM27602B	II	FK	FU-16	HS27602B	2C681	FU-34	FSH27602B	FSHX27601B	XY07552B	↓	OC681	E-201 SH 4		↓	19
2V2587	HD27657A	HDM27657A	I	EK	FU-17	HS27657A	2C681	FU-33	FSH27657A	FSHX27657A	XY07552A	8.3C/11.1C	OC681	E-201 SH 2		G-2	1C
2V2588	HD27657B	HDM27657B	II	FK	FU-18	HS27657B	2C681	FU-34	FSH27657B	FSHX27657B	XY07552B	↓	OC681	E-201 SH 4	↓	↓	19

TERMINAL NUMBERS

2C681												OC681	
TB3-78	TB3-79	TB3-80	TB3-81	TB3-82	TB3-84	TB3-85	TB3-86	TB3-87	TB3-88	TB3-89	TB3-90	TB10-15	TB10-16	TB10-17
TB8-78	TB8-79	TB8-80	TB8-81	TB8-82	TB8-84	TB8-85	TB8-86	TB8-87	TB8-88	TB8-89	TB8-90	TB9-1	TB9-2	TB9-3
TB2-14	TB2-15	TB2-16	TB2-17	TB2-13	TB2-20	TB2-21	TB2-22	TB2-23	TB2-24	TB2-25	TB2-26	TB10-18	TB10-19	TB10-20
TB7-14	TB7-15	TB7-16	TB7-17	TB7-18	TB7-20	TB7-21	TB7-22	TB7-23	TB7-24	TB7-25	TB7-26	TB9-4	TB9-5	TB9-6
TB2-40	TB2-41	TB2-42	TB2-43	TB2-44	TB2-46	TB2-47	TB2-48	TB2-49	TB2-50	TB2-51	TB2-52	TB10-21	TB10-22	TB10-23
TB7-40	TB7-41	TB7-42	TB7-43	TB7-44	TB7-46	TB7-47	TB7-48	TB7-49	TB7-50	TB7-51	TB7-52	TB9-7	TB9-8	TB9-9

NOTES:

1. FOR STANDARD SYMBOLS FOR ELECTRICAL DIAGRAM SEE E-42.
2. FOR PLAN SWITCH ELECTRONIC CONTROL SEE DWG 8856-M320-42.
4. FUSE FU-33 & SURGE ARRESTER COMMON TO SCHEMES 2V2583, 2V2585 & 2V2587. FUSE FU-34 & SURGE ARRESTER COMMON TO SCHEMES 2V2584, 2V2586 & 2V2588.

PRC APERTURE CARD

Docket #50-387
Control #8303220117-19
Date 3/10/83 of Document:
REGULATORY DOCKET FILE

REFERENCE DWG'S.	
BECHTEL NO.	PL. NO.
V-176	B-106516
E-42	A-107191
E-201	D-107350

A	11/17/77	REV'D TO INCORP DCN #1 & SFR 2096 & REV'D ALM CONTACT & L.S. CONTACTS PER SFR 2231	AC	DCC	LW / WH
A	11/4/77	REVISED PER SFR 1373	ACH	KB	LW
A	6/5/77	ADDED TERM NOS. & RELEASED HOLD.	BWJ	JB	LW
A	9/8/82	REVISED TO INCORP FCR-E-7725.	ADL	DCC	WH / LW
A	5/27/83	REVISED TO INCORP FCR E-6839 & REVISED PER DCP 762 & DCP 4E	NG	DCC	LW
A	7/13/76	ISSUED FOR CONSTRUCTION	JB	JB	WH
NO.	DATE	REVISIONS	BY	CHK	DESIGN SUPV / ENGR / PROJ ENGR / APP'D

SCALE NONE | DESIGNED J. BURROR | DRAWN UCV | CHIEF ENGR

PENNSYLVANIA POWER & LIGHT COMPANY

ALLENTOWN, PENNSYLVANIA

SUSQUEHANNA STEAM ELECTRIC STATION – UNIT 1, UNIT 2

BECHTEL – SAN FRANCISCO

SCHEMATIC DIAGRAM HVAC REACTOR BLDG VENT SYSTEM RECIRC. ISOLATION DAMPERS UNIT 2

JOB No.	DRAWING No.	REV.
8856	E-192 SH 27	7

D-107341 SH 27

UNCONTROLLED DOCUMENT FOR REFERENCE ONLY

EDWARD K. KANG PROFESSIONAL ENGINEER 17538-E COMMONWEALTH OF PENNSYLVANIA

C2C21 : SCHEM REAC BLDG VENT SYSTEM [V]

D

24X

I certify that the microfilmed image contained on this microforms were made in the normal and regular course of business. This is a true, full, correct and complete copy of the original document and/or of the original document as modified by the subsequent amendments thereto.

P.C. AKINS M-1082 Camera Type MRG 1

This drawing and the design it covers are the property of BECHTEL. They are merely loaned and on the borrower's express agreement that they will not be reproduced, copied, loaned, exhibited, nor used except in the limited way and purposes given by the lender to the borrower.

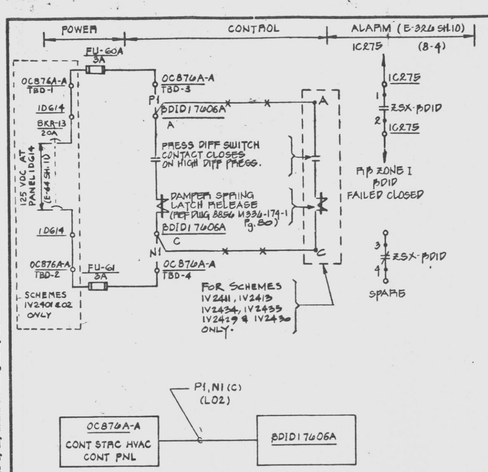

F/C-EK

BACKDRAFT ISOLATION DAMPERS BDID17606A

SCHEME NO. IV2401 I

SCHEME NO.	DAMPER	FUSE NO.	FUSE LOC	ESS DIV	F/C	TERM NOS	
IV2401	BDID17606A	FU-60A, 61	0C876A-A	I	EK	D-3	D-4
02	06B	46, 47	0C876B-A	II	FK	D-3	D-4
03	05A	62, 63	0C876A-A	I	EK	D-5	D-6
04	05B	48, 49	0C876B-A	II	FK	D-5	D-6
05	03A	64, 65	0C876A-A	I	EK	D-7	D-8
06	04A	66, 67				D-9	D-10
07	10A	68, 69				D-11	D-12
08	08A	70, 71				D-13	D-14
09	09A	72, 73	↓	↓	↓	D-15	D-16
10	09B	50, 51	0C876B-A	II	FK	D-7	D-8
11	07B	52, 53				D-9	D-10
12	11B	54, 55	↓	↓	↓	D-11	D-12
13	07A	74, 75	0C876A-A	I	EK	D-17	D-18
14	11A	76, 77				D-19	D-20
15	02A	78, 79		↓	↓	D-21	D-22
16	02B	56, 57	0C876B-A	II	FK	D-13	D-14
17	03A	80, 81	0C876A-A	I	EK	D-23	D-24
18	03B	58, 59	0C876B-A	II	FK	D-15	D-16
19	08A	82, 83	0C876A-A	I	EK	D-25	D-26
↓ 20	08B	60, 61	0C876B-A	II	FK	D-17	D-18
IV2423	BDID17608A	86, 87	0C876A-A	I	EK	D-27	D-28
24	09B	64, 65	0C876B-A	II	FK	D-19	D-20
25	03B	66, 67				D-21	D-22
26	04B	68, 69	↓	↓	↓	D-23	D-24
33	14A	62A, 63A	0C876A-A	I	EK	D-29	D-30
34	15A	96, 97	0C876A-A	I	EK	D-31	D-32
28	14B	74, 75	0C876B-A	II	FK	D-25	D-26
30	15B	76, 77				D-27	D-28
31	10B	78, 79				D-29	D-30
↓ 32	↓ 68P	↓ 80, 81	↓	↓	↓	D-31	D-32

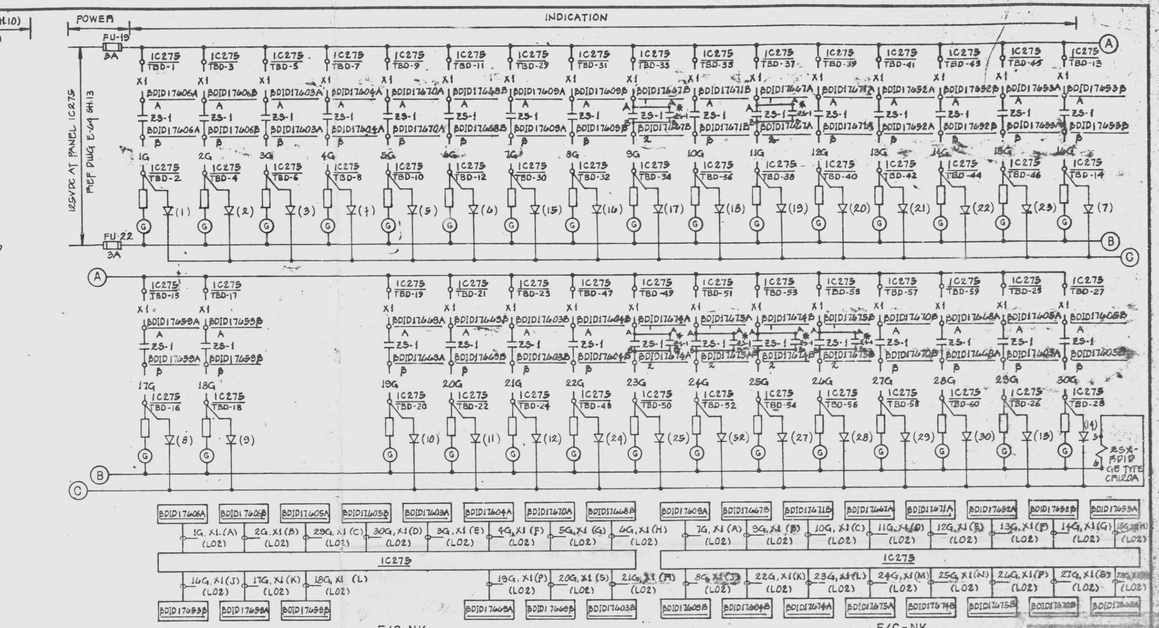

F/C-NK

BACKDRAFT ISOLATION DAMPERS

SCHEME NO. IV2400

F/C-NK

BACKDRAFT ISOLATION DAMPERS

SCHEME NO. IV2433

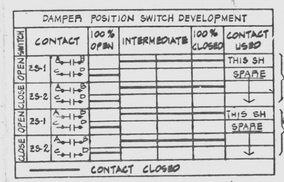

TYPICAL ALL DAMPERS THIS SH.
FOR BDID 17667A & B, 17674A & B AND 17673A & B ONLY.

NOTES:
1. FOR STANDARD SYMBOL FOR ELECTRICAL DIAG SEE 8886-E-82.
2. ADDED TERMINAL BLOCKS, DIODES AND FUSES PURCHASED FROM E-40 SH 62.
3. *RELAY ZSX-BDID PURCHASED FROM E-40 SH 54.

REFERENCE DWG'S.	
BECHTEL NO.	PL. NO.
A-42	A-107191
V-176	B-106516
E-40	A-107189

NO.	DATE	REVISIONS	BY	CHK	DESIGN ENG'R	PROJ ENG'R	APP'D
5	9/9/10	RFF 2060 WAS INTERIM REV 3 (W.O. A 5-66) & REV. REP (SEE 4)	GT	BH	TG	TG	
4	4/4/79	REVISED CONTROL & PROG. SYS. DEV OF BDID 17607A & B, 17A & B & 75A & B	MJ	RS	DZ		
3	7/17/78	ADDED BDID 17607 & 17608 DIODES, FUSES, RELAY & NOTES	MB	RS	RL		
2	5/4/77	ADDED SECTION "LETTERS TO DCS" & ADDED TERM NOS & EC 1563 AS SHOWN	KT	DJD	RL		
1	9/12/72	ISSUED "AS BUILT"	VA	FRM	LC		
0	7/14/72	ISSUED FOR CONSTRUCTION	MPS	RS	RL	RL	

SCALE — DESIGNED J. BURROR — DRAWN MPSANTOS

PENNSYLVANIA POWER & LIGHT COMPANY
ALLENTOWN, PENNSYLVANIA
SUSQUEHANNA STEAM ELECTRIC STATION — UNIT 1, UNIT 2

BECHTEL — SAN FRANCISCO

SCHEMATIC DIAGRAM HVAC REACTOR BLDG VENT SYSTEM BDID'S UNIT 1

JOB No.	DRAWING No.	REV.
8856	E-192 SH 20	G

D-107341 SH 20

PRC APERTURE CARD

THIS DOCUMENT IS UNDER ADMINISTRATIVE CONTROL. CHANGES CAN BE MADE WITHOUT PRIOR FORMAL APPROVAL.

Docket # 50-387
Control # 8303280117
Date 4/1083 of Document:
REGULATORY DOCKET FILE

UNCONTROLLED DOCUMENT FOR REFERENCE ONLY

G|C|2|1 | SCHEM MEAC BLDG VENT SYS | W

24X

I certify that the microfilmed image contained on this microform were made in the normal and regular course of business. This is a true, full, correct and complete reproduction and replacement for and/or in lieu of original documents generated by the Bechtel group of companies.
Signed: J. ACCINTO Date 6-17-82 Camera Type XRU 2
Camera Operator

D

This drawing and the design it covers are the property of BECHTEL. They are merely loaned and on the borrower's express agreement that they will not be reproduced, copied, loaned, exhibited, nor used except in the limited way and purposes given by the lender to the borrower.

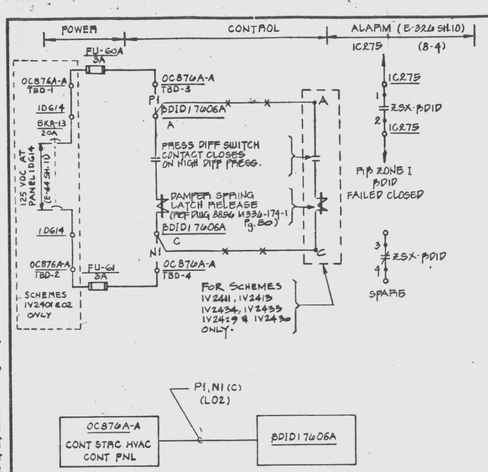

F/C-EK

BACKDRAFT ISOLATION DAMPERS BDID17606A

SCHEME NO. IV2401 I

SCHEME NO.	DAMPER	FUSE NO.	FUSE LOC	ESS DIV	F/C	TERM NOS	
IV2401	BDID17606A	FU-60A, 61	0C876A-A	I	EK	D-3	D-4
02	06B	46, 47	0C876B-A	II	FK	D-3	D-4
03	05A	62, 63	0C876A-A	I	EK	D-5	D-6
04	05B	48, 49	0C876B-A	II	FK	D-5	D-6
05	03A	64, 65	0C876A-A	I	EK	D-7	D-8
06	04A	66, 67				D-9	D-10
07	10A	68, 69				D-11	D-12
08	08A	70, 71				D-13	D-14
09	09A	72, 73	↓	↓	↓	D-15	D-16
10	09B	50, 51	0C876B-A	II	FK	D-7	D-8
11	07B	52, 53				D-9	D-10
12	11B	54, 55	↓	↓	↓	D-11	D-12
13	07A	74, 75	0C876A-A	I	EK	D-17	D-18
14	11A	76, 77				D-19	D-20
15	02A	78, 79		↓	↓	D-21	D-22
16	02B	56, 57	0C876B-A	II	FK	D-13	D-14
17	03A	80, 81	0C876A-A	I	EK	D-23	D-24
18	03B	58, 59	0C876B-A	II	FK	D-15	D-16
19	08A	82, 83	0C876A-A	I	EK	D-25	D-26
↓ 20	08B	60, 61	0C876B-A	II	FK	D-17	D-18
IV2423	BDID17608A	86, 87	0C876A-A	I	EK	D-27	D-28
24	09B	64, 65	0C876B-A	II	FK	D-19	D-20
25	03B	66, 67				D-21	D-22
26	04B	68, 69	↓	↓	↓	D-23	D-24
33	14A	62A, 63A	0C876A-A	I	EK	D-29	D-30
34	15A	96, 97	0C876A-A	I	EK	D-31	D-32
28	14B	74, 75	0C876B-A	II	FK	D-25	D-26
30	15B	76, 77				D-27	D-28
31	10B	78, 79				D-29	D-30
↓ 32	↓ 68P	↓ 80, 81	↓	↓	↓	D-31	D-32

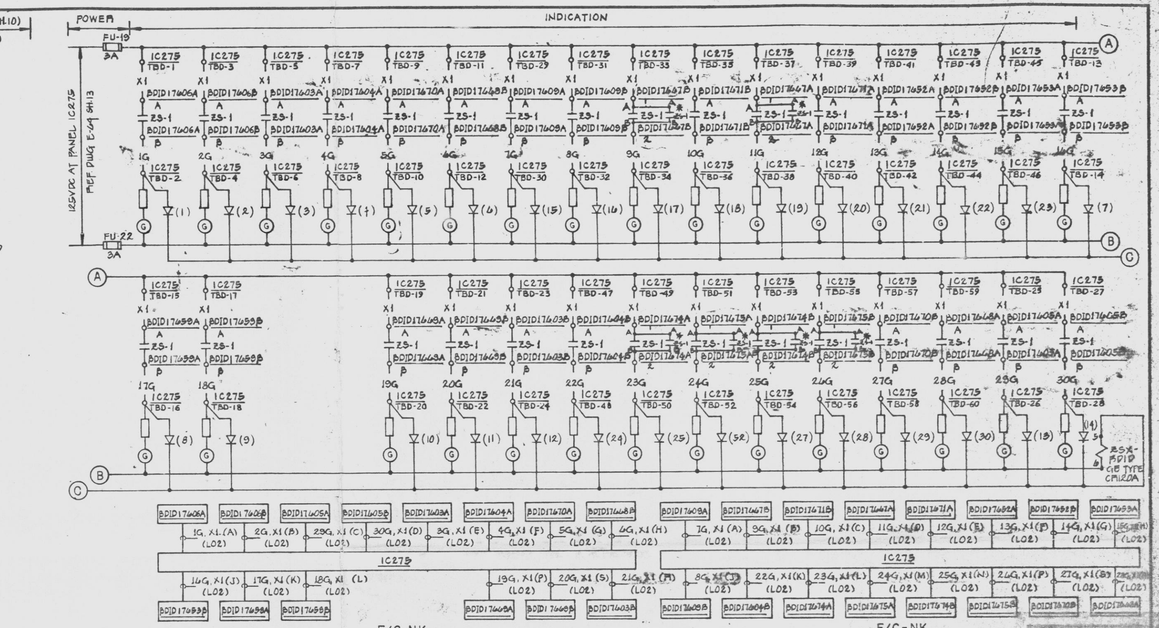

F/C-NK

F/C-NK

BACKDRAFT ISOLATION DAMPERS

SCHEME NO. IV2400

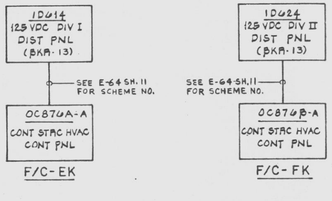

DAMPER POSITION SWITCH DEVELOPMENT

CONTACT	100% OPEN	INTERMEDIATE	100% CLOSED	CONTACT USED	
ZS-1 OPEN				THIS SH	BLADE #1
ZS-2				SPARE	
ZS-1 CLOSE				THIS SH	BLADE #2
ZS-2				SPARE	

CONTACT CLOSED

TYPICAL ALL DAMPERS THIS SH. # FOR BDID 17667A & B, 17674A & B AND 17673A & B ONLY.

NOTES:
1. FOR STANDARD SYMBOL FOR ELECTRICAL DIAG SEE 8886-E-82.
2. ADDED TERMINAL BLOCKS, DIODES AND FUSES PURCHASED FROM E-40 SH 62.
3. *RELAY ZSX-BDID PURCHASED FROM E-40 SH 54.

REFERENCE DWG'S.	
BECHTEL NO.	PL. NO.
A-42	A-107191
V-176	B-106516
E-40	A-107189

PRC APERTURE CARD

Docket # 50-387
Control # 8303280117
Date 4/08/83 of Document:
REGULATORY DOCKET FILE

UNCONTROLLED DOCUMENT FOR REFERENCE ONLY

THIS DOCUMENT IS UNDER ADMINISTRATIVE CONTROL. CHANGES CAN BE MADE WITHOUT PRIOR PSPL APPROVAL.

NO.	DATE	REVISIONS	BY	CHK	DESIGN ENG'G	PROJ MGR	APPR
5	7/9/18	REF DWG WAS INTERIM REV 8 (W.O. A 5-66) & REV. REP (SLE-18)	GT	BH	TG	TG	
4	7/4/79	REVISED CONTROL & PWR. SUB. DEV OF BDID 17607A & B, 17A & B & 75A & B	MJ	MS	DE		
3	7/1/79	ADDED BDID 17607 & BDID 17609 DIODES, FUSES, RELAY & NOTES	MB	MS	RL		
2	5/4/77	ADDED SECTION "LETTERS TO DESIGN" ADDED TERM NOS & REVISED AS SHOWN	RT	DJJ	RL		
1	9/12/72	ISSUED "AS BUILT"	VA	FRM	GL		
0	7/14/72	ISSUED FOR CONSTRUCTION	MPS	RS	MM	TG	

SCALE — DESIGNED J. BURROR — DRAWN MPSANTOS

PENNSYLVANIA POWER & LIGHT COMPANY
ALLENTOWN, PENNSYLVANIA
SUSQUEHANNA STEAM ELECTRIC STATION — UNIT 1, UNIT 2

BECHTEL — SAN FRANCISCO

SCHEMATIC DIAGRAM HVAC REACTOR BLDG VENT SYSTEM BDID'S UNIT 1

JOB No.	DRAWING No.	REV.
8856	E-192 SH 20	G

D-107341 SH 20

G|C|2|1 | S|C|H|E|M | R|E|A|C | B|L|D|G | V|E|N|T | S|Y|S | | W

24X

I certify that the microfilmed image contained on this microform were made in the normal and regular course of business. This is a true, full, correct and complete reproduction and replacement for and/or in lieu of original documents generated by the Bechtel group of companies.
Signed: J. ACOSTO Date 6-17-82 Camera Type XRU 2
Camera Operator

D

This drawing and the design it covers are the property of BECHTEL. They are merely loaned and on the borrower's express agreement that they will not be reproduced, copied, loaned, exhibited, nor used except in the limited way and private use permitted by any written consent given by the lender to the borrower.

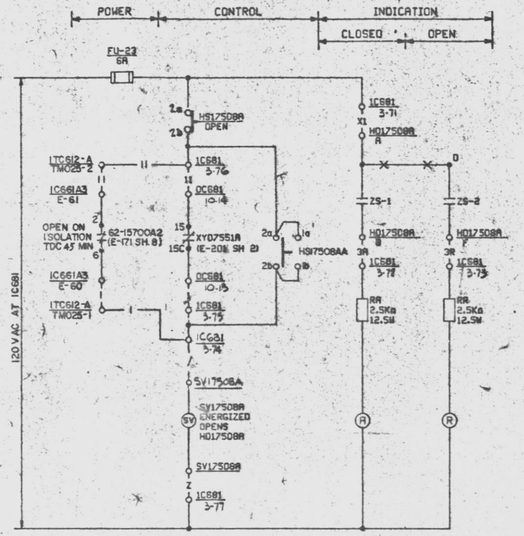

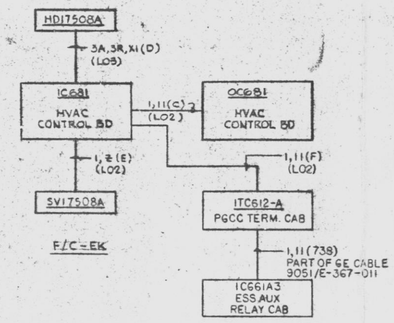

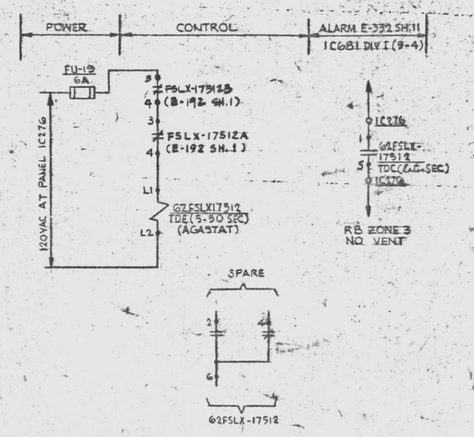

REACTOR BLDG ZONE III AIR FLOW
SCHEME 1V2657
(SEE TABLE A)

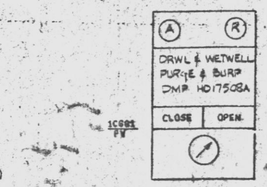

SWITCH DEVELOPMENT

BLOCK NO.	CONTACT NO.		POSITION OPEN	POSITION CLOSE	DWG. NO.
TOP	1a 1b / 2a 2b	F		X	SPARE
		B	X		THIS SH

SELECTOR SWITCH: HS17508A, HS17508B
GE TYPE CR2940
MAINTAINED CONTACTS

DAMPER POSITION SWITCH DEVELOPMENT

SWITCH	CONTACT NO.	100% OPEN	INTERMEDIATE	100% CLOSED	CONTACT USED
OPEN	ZS-1 A a b				THIS SH.
					SPARE
CLOSED	ZS-2 D d c				SPARE
					THIS SH.

CONTACT CLOSED

AIR OPERATED DAMPER: HD17508A, HD17508B

DRYWELL & SUPPCHAM DAMPER HD17508A ISO SIGNAL BYPASS

DRYWELL BURP & PURGE LINE ISOLATION DAMPER HD17508A
SCHEME NO. 1V2542 [I]
(SEE TABLE B)

SWITCH DEVELOPMENT

BLOCK NO.	CONTACT NO.		POSITION SC	POSITION NORM	POSITION DW	DWG. NO.	
TOP	1a 1b / 2a 2b	F	—		X	THIS DWG.	
		B	X			THIS DWG.	
BTM	3a 3b / 4a 4b	F			X	E-171 SH. 8	○
		B	X			E-171 SH. 8	○
TOP	5a 5b / 6a 6b	F			X	E-185 SH. 11	△
		B	X			E-185 SH. 11	△
BTM	7a 7b / 8a 8b	F			X	E-332 SH. 10	□
		B	X			E-332 SH. 10	□

CONTROL SWITCH: HS-17508AA, HS-17508BA
GE TYPE CR2940
MAINTAINED CONTACTS
KEY REMOVABLE IN NORMAL POSITION
○ E-171 SH. 19
△ E-185 SH. 12 } FOR HS-17508BA
□ E-332 SH. 13

TABLE A

SCHEME NO.	ZONE	FUSE NO.	FUSE LOC.	TIME DELAY RELAY	INTERLOCKS RELAY	CONTACTS	DWG	RELAY	CONTACTS	DWG	PANEL	WINDOW	DWG
1V2657	III	FU-19	IC276	G2FSLX17512	FSLX17512A	3, 4	E-192 SH.1	FSLX17512B	3,4	E-192 SH.1	IC681 DIV I	9-4	E-332 SH.11
1V2658	I	FU-20	IC276	G2FSLX17522	FSLX17522A	1, 2	E-192 SH.21	FSLX17522B	1, 2	E-192 SH.21	IC684 DIV I	9-3	E-332 SH.11

TABLE B

SCHEME NO.	DAMPER	CONTROL SWITCH NUMBER	CONTROL SWITCH LOC	FUSE NO.	ESS DIV	F/C		INTERLOCKS RELAY	LOC	CONTACTS	SEL SW	LOC	CONTACTS	TERMINAL NO. PANEL	TERMINAL		TERMINAL CAB.	TERMINAL		G.E. CABLE
1V2542	HD17508B	HS17508A	IC681	FU-23	I	EK		62-15700A2	IC661A3	2,6	HS-17508AA	IC681	1a 1b 2a 2b	IC661A3	E-61	E-60	ITC612-A	TM025-2	TM025-1	9051/E367-011
1V2543	HD17508B	HS17508B	IC681	FU-24	II	FK		62-15700B2	IC661B3	2,6	HS-17508BA	IC681	1a 1b 2a 2b	IC661B3	B-43	B-42	ITC622-B	TM052-2	TM052-1	8952/E367-039

SOLENOID VALVE	INTLKS RELAY	LOC	CONTACTS	DWG.	TERMINAL NUMBERS IC681							OC681	
SV17508A	XY07551A	OC681	15,15C	E-201 SH.2	3-71	3-72	3-73	3-74	3-75	3-76	3-77	10-13	10-14
SV17508B	XY07551B	OC681	15,15C	E-201 SH.4	8-71	8-72	8-73	8-74	8-75	8-76	8-77	5-10	5-11

Docket # 50-387
Control # 8306300117 T= 121
Date 6/1/83 of Document:
REGULATORY DOCKET FILE

REFERENCE DWGS.

BECHTEL NO.	PL NO.
V-42	A-107191
V-175	B-108515
E-201	D-107350

NOTES:
1. FOR STANDARD SYMBOLS FOR ELECTRICAL DIAGRAMS SEE DWG. E-42.

PRC APERTURE CARD

THIS DOCUMENT IS UNDER BECHTEL ADMINISTRATIVE CONTROL. NO CHANGES CAN BE MADE WITHOUT PRIOR PP&L APPROVAL.

NO.	DATE	REVISIONS	BY	CHK'D	DESIGN SUPV'R	PROJ ENGR	PROJ MGR	APP'D
5	4/16/84	REV TO INCORP FCR E-10718 REV TO AGREE WITH CONNECT LIST (DCR 42)	RS	MHF				
4	7/31/81	INCORP FCR E-6861 AND DCP028.1 IDCN NO.1 (REV. 0)	NG	JB				
3	7/1/81	REVISED TO INCORPORATE FCR E-10096	TTY	JB				
2	9/1/79	ADDED TERM. NOS & RELEASED NOTE	DW	JB				
1	3/4/77	AS SHOWN	CL					
0	11/1/76	ISSUED "AS BUILT"	VA					
	9/17/76	ISSUED FOR CONSTRUCTION	ITB					

SCALE NONE | DESIGNED J. BURROR | DRAWN

PENNSYLVANIA POWER & LIGHT COMPANY
ALLENTOWN, PENNSYLVANIA
SUSQUEHANNA STEAM ELECTRIC STATION – UNIT 1, UNIT 2

BECHTEL – SAN FRANCISCO

SCHEMATIC DIAGRAM HVAC
REACTOR BLDG VENT SYSTEM
DRYWELL BURP & PURGE – UNIT 1

JOB No.	DRAWING No.	REV.
8856	E-192 SH 19	7

D-107341 SH 19

UNCONTROLLED DOCUMENT FOR REFERENCE ONLY

G1C21 SCHEM REAC BLDG VENT SYS 1 W

24X

I certify that the microfilmed image contained on this microform were made in the normal and regular course of business. This is a true, full, correct and complete reproduction and replacement for and/or in lieu of original documents generated by the Bechtel group of companies.
Signed ____ Date 6-17-82 Camera Type ____
Camera Operator

D

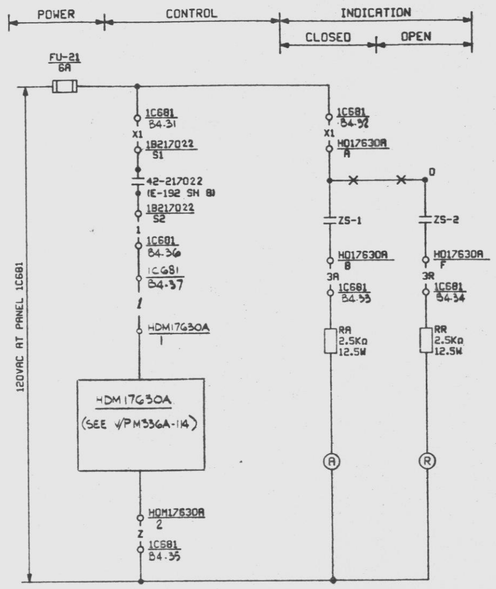

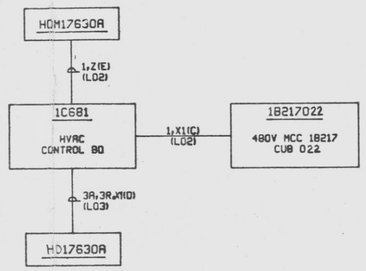

F/C-EK

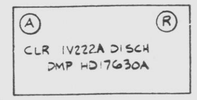

1C681
FV

DAMPER POSITION SWITCH DEVELOPMENT					
SWITCH	CONTACT NO.	100% OPEN	INTERMEDIATE	100% CLOSED	CONTACT USED
OPEN	ZS-1				THIS SH
					SPARE
CLOSED	ZS-2				SPARE
					THIS SH
	CONTACT CLOSED				

MOTOR OPERATED DAMPER: HD17630A, HD17630B

EMER SWGR COOLING DAMPER HD17630A

SCHEME NO. 1V2544 I

NOTES:

1. FOR STANDARD SYMBOLS FOR ELECTRICAL DIAGRAMS SEE DWG. E-42.

PRC APERTURE CARD

THIS DOCUMENT IS UNDER PP&L ADMINISTRATIVE CONTROL. NO CHANGES CAN BE MADE WITHOUT PRIOR PP&L APPROVAL.

REFERENCE DWGS.	
BECHTEL NO.	PL NO.
V-42	A-107191
V-176	B-106516

SCHEME NO.	DAMPER	DAMPER MOTOR	FUSE NUMBER	FUSE LOC	ESS DIV	F/C	INTLKS STARTER LOC	INTLKS CONTACT	INTLKS DWG	TERMINAL NUMBERS 1C681						
1V2544	HD17630A	HDM17630A	FU-21	1C681	I	EK	1B217022	S1,S2	E-192 SH 8	4-31	4-32	4-33	4-34	4-35	4-36	4-37
1V2545	HD17630B	HDM17630B	FU-22	1C681	II	FK	1B227052	S1,S2	E-192 SH 8	9-31	9-32	9-33	9-34	9-35	9-36	9-37

Docket # 50-387
Control # 8303220117-122
Date 3/10/83 of Document:
REGULATORY DOCKET FILE

UNCONTROLLED DOCUMENT FOR REFERENCE ONLY

No.	DATE	REVISIONS	BY	CH'K	DESIGN SUPV	ENG'R	PROJ ENGR	APP'D
3	6/11/82	ISSUED "AS BUILT"	VA	EMM				
2	6/17/79	ADDED TERM. NOS & RELEASED HOLD.	BW	LZB				
1	2/14/78	REVISED MCC CUB NR AS SHOWN	LZB					
0	9/9/76	ISSUED FOR CONSTRUCTION	YB	LZB M.T.				

SCALE NONE | DESIGNED J. BURROR | DRAWN

PENNSYLVANIA POWER & LIGHT COMPANY
ALLENTOWN, PENNSYLVANIA
SUSQUEHANNA STEAM ELECTRIC STATION – UNIT 1, UNIT 2

BECHTEL – SAN FRANCISCO

SCHEMATIC DIAGRAM HVAC
REACTOR BLDG VENT SYSTEM
SWGR COOL DAMPERS – UNIT 1

JOB No.	DRAWING No.	REV.
8856	E-192 SH 17	3

D-107341 SH 17

G1C21 SCHEM REAC BLDG VENT SYST W

22 X 34 "D" SIZE

This drawing and the design it covers are the property of BECHTEL. They are merely loaned and on the borrower's express agreement that they will not be reproduced, copied, loaned, exhibited, nor used except in the limited way and private use permitted by any written consent given by the lender to the borrower.

4/76 D P ARKWRIGHT NO. 2102-W005

24X

I certify that the microfilmed image contained on this microform were made in the normal and regular course of business. This is a true, full, correct and complete reproduction and replacement for and/or in lieu of original documents generated by the Bechtel group of companies.

Signed JACINTO Date 6-17-82 Camera Type MRG I
Camera Operator

D

This drawing and the design it covers are the property of BECHTEL. They are merely loaned and on the borrower's express agreement that they will not be reproduced, copied, loaned, exhibited, nor used except in the limited way and private use permitted by any written consent given by the lender to the borrower.

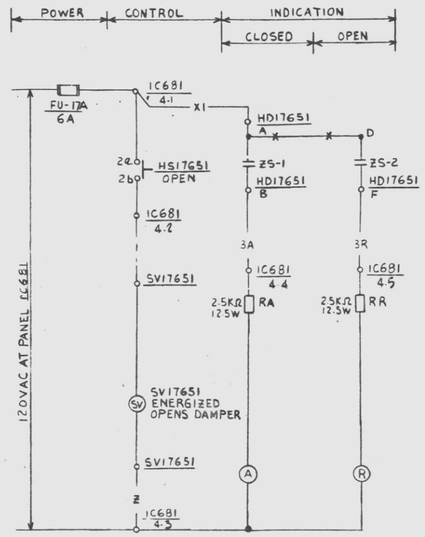

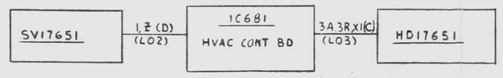

FC/EK

PRIMARY CONTAINMENT ISOLATION DAMPER HD17651

SCHEME NO 1V2570 [I]

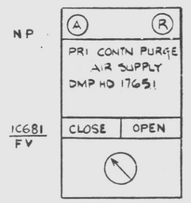

SWITCH DEVELOPMENT

BLOCK LOC	CONTACT NO.		POSITION OPEN	POSITION CLOSE	DWG NO.
TOP	1a 1b 1c	F		X	SPARE
	2a 2b	B	X		THIS SH.

SELECTOR SWITCH: HS17651
GE TYPE CR2940
MAINTAINED CONTACTS

DAMPER POSITION SWITCH DEVELOPMENT

SWITCH	CONTACT NO	100% OPEN	INTERMEDIATE	100% CLOSED	CONTACT USED
OPEN	ZS-1				THIS SH
					SPARE
CLOSED	ZS-2				SPARE
					THIS SH

CONTACT CLOSED

AIR OPERATED DAMPER: HD17651

NOTE:

1. FOR STANDARD SYMBOLS FOR ELECTRICAL DIAGRAM SEE E-42

PRC APERTURE CARD

THIS DOCUMENT IS UNDER PP&L ADMINISTRATIVE CONTROL. NO CHANGES CAN BE MADE WITHOUT PRIOR PP&L APPROVAL.

REFERENCE DWG'S.	
BECHTEL NO.	PL. NO.
E-42	A-107191
V-176	B-106516

No.	DATE	REVISIONS	BY	CH'K	DESIGN SUPV	ENG'R	PROJ ENG'R	APP'D
A	7/14/83	ISSUED "AS BUILT"	VA	JH	JK			
A	6/15/83	ADDED "ERM NOS & RELEASED NOLD"	BW	JTB	RL			
A	5/1/82	REVISED AS SHOWN PER LOGIC DIAGRAM V-176, SH.5 REV 3	JB	JTB M.T.	JH			
A	12/3/81	ISSUED FOR CONSTRUCTION	MT	JTB M.T. LOS	JH			

SCALE NONE | DESIGNED JBURROR | DRAWN W.Y. CHAN | CHIEF ENG'R

PENNSYLVANIA POWER & LIGHT COMPANY

ALLENTOWN, PENNSYLVANIA

SUSQUEHANNA STEAM ELECTRIC STATION – UNIT 1, UNIT 2

BECHTEL – SAN FRANCISCO

SCHEMATIC DIAGRAM HVAC
REACTOR BLDG VENT SYSTEM
PRI CONTAINMENT ISO DAMP UNIT 1

JOB No.	DRAWING No.	REV.
8856	E-192 SH15	D

D-107341 SH15

Docket # 50-387
Control # 8303220117-12
Date 3/10/83 of Document:
REGULATORY DOCKET FILE

UNCONTROLLED DOCUMENT
FOR REFERENCE ONLY

COMMONWEALTH OF PENNSYLVANIA REGISTERED PROFESSIONAL ENGINEER EDWARD K. KANG No. 17006-E

12/14/81

Edward K. Kang

GIK21 SCHEM REAC BLDG VENT SYS I W

22 x 36 "D" SIZE

24X

I certify that the microfilmed image contained on this microfiche were made in the normal and regular course of business. This is a true, full, correct and complete reproduction and replacement for and/or in lieu of original documents created by the Bechtel group of companies.

DANNY 6-23-82 MRG 1

STERLING

D

This drawing and the design it covers are the property of BECHTEL. They are merely loaned and on the borrower's express agreement that they will not be reproduced, copied, issued, assigned, nor used except as the limited way and private use permitted by any written consent given by the loaner to the borrower.

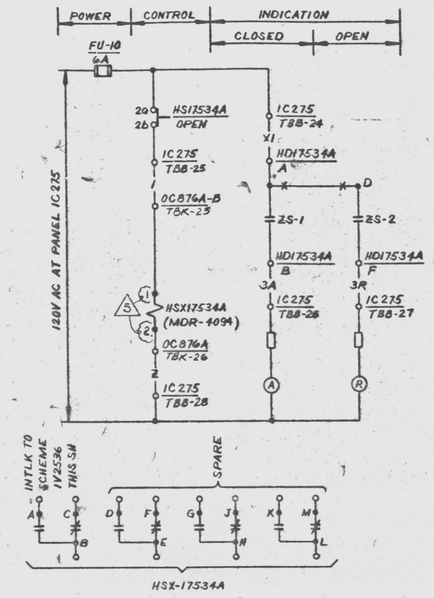

RB ZONE III AIRLOCK I-606 ISOLATION DAMPER CONTROL

SCHEME Nº IV2589

(SEE TABLE A)

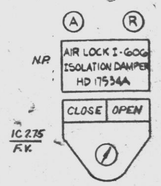

SWITCH DEVELOPMENT

BLOCK LOC	CONTACT Nº		POSITION OPEN	POSITION CLOSE	DWG Nº
TOP	1a 3a 1b	F		X	SPARE
	2a 2b	B	X		THIS SH

SELECTOR SWITCH: HS-17534A,B,C,D,E,F,H
GE TYPE CR2940
MAINTAINED CONTACT

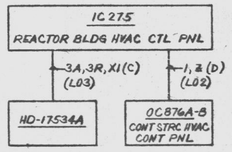

F/C-NK

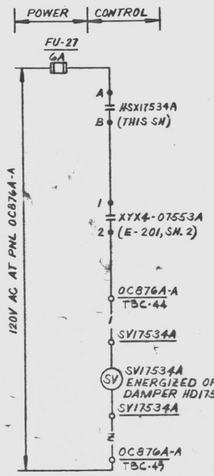

AIRLOCK ISOLATION DAMPER SV-17534A

SCHEME Nº IV2536

(SEE TABLE B)

DAMPER POSITION SWITCH DEVELOPMENT

DUPLEX OPER SWITCH	CONTACT Nº		100% OPEN	INTERMEDIATE	100% CLOSED	CONTACT USED
	ZS-1	A–B				THIS SH
		A–C				SPARE
	ZS-2	D–E				SPARE
		D–F				THIS SH

CONTACT CLOSED

AIR OPERATED DAMPER: HD-17534A,B,C,D,E,F,H

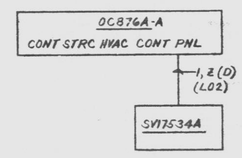

F/C-EK

NOTE:

1. FOR STANDARD SYMBOLS FOR ELECTRICAL DIAGRAM SEE E-42

TABLE A

SCHEME Nº	AIR LOCK	DAMPER	CONTROL SWITCH Nº	CONTROL SWITCH LOC	FUSE Nº	FUSE LOC	INTLK'S Nº	INTLK'S CONTACTS	INTLK'S SCHEME	INTLK'S DWG	TERMINAL Nºs LOCAL PANEL						OC876A-B
IV2589	I-606	HDI7534A	HSI7534A	IC275	FU-10	IC275	HSX17534A	A,B	IV2536	THIS SH	IC275	B-24	B-25	B-26	B-27	B-28	K-25
IV2590	I-611	B	B	5	11	IC275	B		IV2537		IC275	B-29	B-30	B-31	B-32	B-33	K-27
IV2591	I-707	C	C	6	22	IC276	C		IV2538		IC276	TB-D-13	TB-D-14	TB-D-15	TB-D-16		K-29
IV2592	I-803	D	D	6	23	IC276	D		IV2539		IC276	TB-D-18	TB-D-19	TB-D-20	TB-D-21		K-31
IV2593	I-805	E	E	6	24	IC276	E		IV2567		IC276	TB-D-23	TB-D-24	TB-D-25	TB-D-26		K-33
IV2594	I-617	F	F	5	15	IC275	F		IV2568		IC275	B-34	B-35	B-36	B-37	B-38	K-35
IV2900	I-618	↓ H	↓ H	↓5	↓ 12	IC275	↓ H	↓	IV2910	↓	IC275	B-39	B-40	B-41	B 42	B-43	K-63

	OC876A-B
	K-26
	K-28
	K-30
	K-32
	K-34
	K-36
	K-64

TABLE B

SCHEME Nº	DAMPER	SOLENOID VALVE	FUSE Nº	FUSE LOC	ESS DIV	F/C	INTLKS RELAY	INTLKS CONTACTS	INTLKS DWG	INTLKS RELAY	INTLKS CONTACTS	INTLKS DWG	TERM. Nºs OC876-A	
IV2536	HDI7534A	SV17534A	FU-27	OC876A	I	EK	HSX17534A	A,B	THIS SH	XYX4-07553A	1,2	E-201, SH. 2	C-44	C-45
IV2537	B	B	28				B				3,4		C-46	C-47
IV2538	C	C	29				C				5,6		C-48	C-49
IV2539	D	D	30				D				7,8		C-50	C-51
IV2567	E	E	31				E				9,10		C-52	C-53
IV2568	F	F	32				F			↓	11,12		C-54	C-55
IV2910	↓ H	↓ H	↓120	↓	↓	↓	↓ H	↓	↓	XYX4-07553A	3,4	↓	C-56	C-57

PRC APERTURE CARD

THIS DOCUMENT IS UNDER PP&L ADMINISTRATIVE CONTROL. NO CHANGES CAN BE MADE WITHOUT PRIOR PP&L APPROVAL.

REFERENCE DWG'S.	
BECHTEL NO.	PL. NO.
V-175	B-106515
E-201	D-107350
E-42	A-107191
5 VPM3364-58	FP-108860

NO.	DATE	REVISIONS	BY	CHK	DESIGN SUPV	ENG'G	PROJ ENGR	APP'D
5	7/24/84	REVISED PER SCR 1346-1101	SB	DWS				
4	3/14/83	INCORPORATED SDDR-RE-007, REVISED AS SHOWN	VS	MT				
3	1/31/83	REVISED AS SHOWN	MT	VS				
2	1/13/82	ISSUED "AS BUILT" ADD. CONTACT INFORM. (DCR 42)	VA					
1	4/14/81	ISSUED FOR CONSTRUCTION	VS	MT	AB	GP		

SCALE NONE | DESIGNED J. BURROR | DRAWN UCV

PENNSYLVANIA POWER & LIGHT COMPANY

ALLENTOWN, PENNSYLVANIA

SUSQUEHANNA STEAM ELECTRIC STATION – UNIT 1, UNIT 2

BECHTEL – SAN FRANCISCO

SCHEMATIC DIAGRAM-HVAC
REACTOR BLDG VENT SYSTEM
AIRLOCK ISOLATION DAMPERS UNIT 1

JOB No.	DRAWING No.	REV.
8856	E-192 SH 14	5

D-107341 SH 14

Docket #50-387
Control #8303220117-124
Date 3/10/83 of Document:
REGULATORY DOCKET FILE

UNCONTROLLED DOCUMENT FOR REFERENCE ONLY

G1C21 SCHEM REAC BLDG VENT SYST W

24X

I certify that the microfilmed image contained on this microform were made in the normal and regular course of business. This is a true, full, correct and complete reproduction and replacement for and/or in lieu of original documents generated by the Bechtel group of companies.

Signed DANNY Date 3-23- Camera Type MRC 1
Camera Operator

D

This drawing and the design it covers are the property of BECHTEL. They are merely loaned and on the borrower's express agreement that they will not be reproduced, copied, loaned, exhibited, nor used except in the limited way and private use permitted by any written consent given by the lender to the borrower.

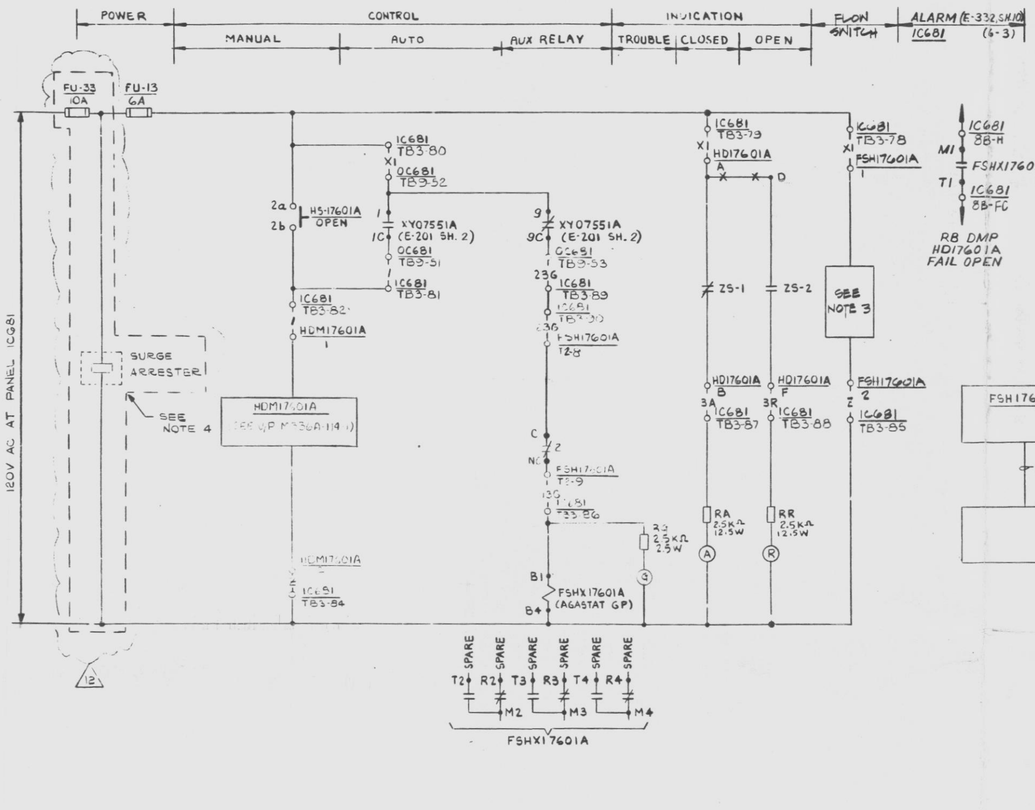

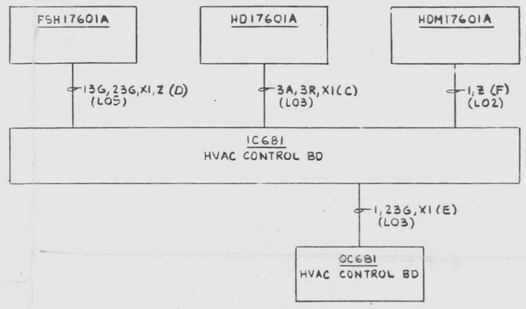

F/C-EK

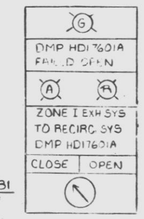

SWITCH DEVELOPMENT

BLOCK No.	CONTACT No.		POSITION OPEN	POSITION CLOSE	DRAWING No.
TOP	1a 1b	F		X	SPARE
	2a 2b	S	X		THIS SH

SELECTOR SWITCH: HS-17601A, HS-17601B
GENERAL ELECTRIC TYPE CR294U
MAINTAINED CONTACT

DAMPER POSITION SWITCH DEVELOPMENT

SWITCH	CONTACT	100% OPEN	INTERMEDIATE	100% CLOSED	CONTACT USED
CLOSED OPEN ZS-1	A→B				THIS SH
	A→C				SPARE
ZS-2	D→E				SPARE
	D→F				THIS SH
CONTACT CLOSED					

MOTOR OPERATED DAMPER: HDI7601A, HDI7601B
HDI7602A, HDI7602B
HDI7657A, HDI7657B

RB ZONE 1 & 2 RECIRC ISOLATION DAMPER HDI7601A

SCHEME Nº IV2583 [I]

SCHEME Nº	DAMPER	MOTOR OPERATOR	ESS DIV	F/C	FUSE Nº	CONTROL SWITCH NUMBER	CONTROL SWITCH LOC	FLOW SWITCH	AUX RELAY	INTLK'S RELAY	INTLK'S CONTACTS	INTLK'S LOC	INTLK'S DWG	ALARM PNL	ALARM WINDOW	ALARM D/WG
IV2583	HDI7601A	HDM17601A	I	EK	FU-13	HS17601A	IC681	FSH17601A	FSHX17601A	XY07551A	1,1C/9,9C	OC681	E-201, SH 2	IC681	6-3	E-332, SH. 10
IV2584	HDI7601B	HDM17601B	II	FK	FU-14	HS17601B	IC681	FSH17601B	FSHX17601B	XY07551B	1,1C/9,9C	OC681	E-201 SH. 4		6-3	13
IV2585	HDI7602A	HDM17602A	I	EK	FU-15	HS17602A	IC681	FSH17602A	FSHX17602A	XY07551A	2,2C/10,10C	OC681	E-201, SH 2		6-4	10
IV2586	HDI7602B	HDM17602B	II	FK	FU-16	HS17602B	IC681	FSH17602B	FSHX17602B	XY07551B	2,2C/10,10C	OC681	E-201, SH 4		6-4	13
IV2587	HDI7657A	HDM17657A	I	EK	FU-17	HS17657A	IC681	FSH17657A	FSHX17657A	XY07551A	3,3C/11,11C	OC681	E-201 SH 2		6-2	10
IV2588	HDI7657B	HDM17657B	II	FK	FU-18	HS17657B	IC681	FSH17657B	FSHX17657B	XY07551B	3,3C/11,11C	OC681	E-201, SH 4	↓	6-2	↓ 13

TERMINAL NUMBERS

IC681												OC681	
3-78	3-79	3-80	3-81	3-82	3-84	3-85	3-86	3-87	3-88	3-89	3-90	3-51	3-52	3-53
8-78	8-79	8-80	8-81	8-82	8-84	8-85	8-86	8-87	8-88	8-89	8-90	6-45	6-50	6-49
2-14	2-15	2-16	2-17	2-18	2-20	2-21	2-22	2-23	2-24	2-25	2-26	3-54	3-56	3-55
7-14	7-15	7-16	7-17	7-18	7-20	7-21	7-22	7-23	7-24	7-25	7-26	6-51	6-53	6-52
2-40	2-41	2-42	2-43	2-44	2A-2	2-47	2-48	2-49	6-50	6-51	6-52	3-57	3-59	3-58
7-40	7-41	7-42	7-43	7-44	7-46	7-47	7-48	7-49	7-50	7-51	7-52	6-54	6-56	6-55

NOTES:
1. FOR STANDARD SYMBOLS FOR ELECTRICAL DIAGRAM SEE E-42.

3. FOR FLOW SWITCH ELECTRONIC CONTROL SEE DWG. 8856-M320-62
4. FU-33 & SURGE ARRESTER COMMON TO SCHEMES IV2583, IV2585 & IV2587. FU-34 & SURGE ARRESTER COMMON TO SCHEMES IV2584, IV2586 & IV2588. SURGE ARRESTER (2) G.E. MODEL # V130PA20B (SEE E-40, SH. 10C) FUSES (FU-33 & 34) BUCHANAN FUSE HOLDERS # 351 W/10 AMP FUSETRON DUAL ELEMENT MIDGET TYPE FNM FUSES (SEE E-40, SH. 9Y)

THIS DOCUMENT IS UNDER PP&L ADMINISTRATIVE CONTROL. NO CHANGES CAN BE MADE WITHOUT PRIOR PP&L APPROVAL

PRC APERTURE CARD

No.	DATE	REVISIONS	BY	CHK	DESIGN SUPV	ENG'R	PROJ ENGR	APP'D
12	8/23	RE-ISSUED "AS BUILT" REVD TO INCORP. ECN #1 (OCP 7115, 4/01 & FCR E-11210.	VA	RPP	SC	/	RPP	RPP
11	5/1/83	ISSUED "AS BUILT"	VA	JAA	JLC	/	RPP	RPP
10	3/11/82	REVISED TO INCORP. FCR-E-10733	TJ	RPP	TC	/	RPP	RPP
9	7/27/10	REVISED PER CH 2096 AS BUILT	MCA	JJ	SC	/	RPP	RPP
8	6/11/79	REVISED PER SER 1874 AS BUILT.	MCA	JJ	DS	/	RPP	RPP
7	12/13/78	REVISED PER SER 1313 (AS BUILT)	MCA	JJ	DS	/	RPP	RPP
6	2/15/77	ISSUED FOR CONSTRUCTION	RBA	JJ	MM	/	RPP	RPP

SCALE NONE | DESIGNED J. BURROR | DRAWN DE SCHOOLEY | CHIEF ENGR

PENNSYLVANIA POWER & LIGHT COMPANY
ALLENTOWN, PENNSYLVANIA
SUSQUEHANNA STEAM ELECTRIC STATION - UNIT 1, UNIT 2
BECHTEL – SAN FRANCISCO

SCHEMATIC DIAGRAM HVAC
REACTOR BLDG VENT SYSTEM
RECIRC ISOLATION DAMPERS UNIT 1

JOB No.	DRAWING No.	REV.
8856	E-192 SH 13	12

D-107341 SH 13

REFERENCE DWG'S.

BECHTEL NO.	PP&L NO.
V-176	B-106516
E-42	A-107191
E-201	D-107350

Doc: 50-387
Cont: 1#8203220117-125
Date: 3/10/83 of Document:
REGULATORY DOCKET FILE

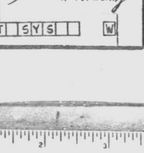

Edward K. Kang 12/8/82

UNCONTROLLED DOCUMENT FOR REFERENCE ONLY

GIC21 SCHEM REAC BLDG VENT SYS W

D

24X JACINTO MRG I

This drawing and the design it covers are the property of BECHTEL. They are merely loaned and on the borrower's express agreement that they will not be reproduced, copied, loaned, exhibited, nor used except in the limited way and private use permitted by any written consent given by the lender to the borrower.

4/76 D.P. ADMINCHART NO. 2102-M005

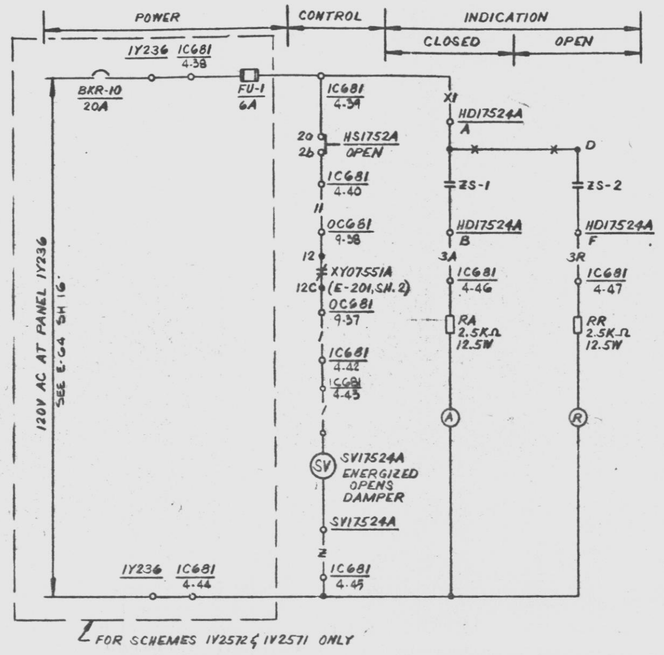

RB ZONE I ISOLATION DAMPER HD-17524A [I]

SCHEME Nº 1V2572

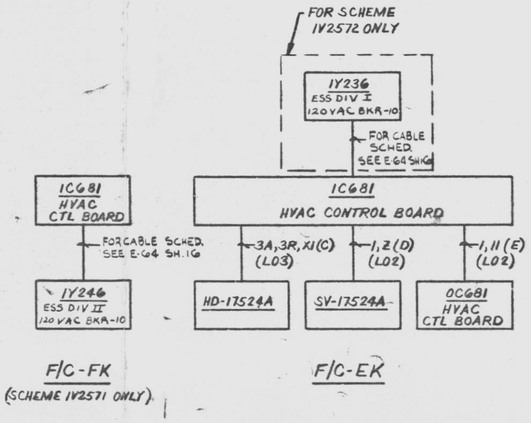

F/C-FK
(SCHEME 1V2571 ONLY)

F/C-EK

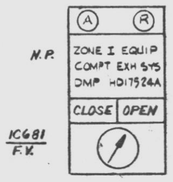

SWITCH DEVELOPMENT

BLOCK LOC	CONTACT Nº		POSITION OPEN	POSITION CLOSE	DWG Nº
TOP	1a 1b	P		X	SPARE
	2a 2b	B	X		THIS SH

SELECTOR SWITCH: HS-17524A & B
HS-17576A & B
HS-17586A & B
HS-17502A & B
HS-17514A & B
HS-17564A & B

GE TYPE CR2940
MAINTAINED CONTACTS

DAMPER POSITION SWITCH DEVELOPMENT

	CONTACT Nº		100% OPEN	INTERMEDIATE	100% CLOSED	CONTACT USED
OPEN / CLOSE SWITCH ZS-1	A	B				THIS SH
		C				SPARE
ZS-2	D	E				SPARE
		F				THIS SH

CONTACT CLOSED

AIR OPERATED DAMPER:
TYPICAL FOR ALL ON THIS SHEET

NOTE:
1. FOR STANDARD SYMBOLS FOR ELECTRICAL DIAGRAM SEE DWG E-42

SCHEME Nº	DAMPER Nº	DAMPER	CONTROL SWITCH Nº	CONTROL SWITCH LOC	FUSE	ESS DIV	F/C	SOLENOID VALVE	INTLK'S RELAY	INTLK'S CONTACTS	INTLK'S DWG	TERMINAL Nº'S IC681							TERMINAL Nº'S OC681	
1V2572	HDI7524A	RB ZONE I ISOLATION DAMPER	HS17524A	IC681	FU-1	I	EK	SV17524A	XY07551A	12,12C	E-201SH.2	4-39	4-40	4-42	4-43	4-45	4-46	4-47	9-37	9-38
1	24B		24B		2	II	FK	24B	B	12,12C	4	9-39	9-40	9-42	9-43	9-45	9-46	9-47	6-36	6-37
3	76A		76A		3	I	EK	76A	A	13,13C	2	4-50	4-51	4-53	4-54	4-55	4-57	4-58	9-39	9-40
4	76B		76B		4	II	FK	76B	B	13,13C	4	9-50	9-51	9-53	9-54	9-55	9-57	9-58	6-38	6-39
6	86A		86A		5	I	EK	86A	A	14,14C	2	3A-5	3-3	3-5	3A-1	3A-2	3A-3	3A-4	9-41	9-42
5	86B		86B		6	II	FK	86B	B	14,14C	4	8-2	8-3	8-5	8-6	8-7	8-9	8-10	6-40	6-41
8	02A	RB ZONE III ISOLATION DAMPER	02A		7	I	EK	02A	XY07553A	10,10C	2	2-30	2-31	2-33	2-34	2-35	2-37	2-38	9-43	9-44
7	02B		02B		8	II	FK	02B	B	10,10C	4	7-30	7-31	7-33	7-34	7-35	7-37	7-38	6-42	6-43
1V2580	14A		14A		9	I	EK	14A	A	11,11C	2	3-50	3-51	3-53	3-54	3-55	3-57	3-58	9-45	9-46
1V2579	14B		14B		10	II	FK	14B	B	11,11C	4	8-50	8-51	8-53	8-54	8-55	8-57	8-58	6-44	6-45
1V2582	64A		64A		11	I	EK	64A	A	12,12C	2	3-25	3-26	3-28	3-29	3-30	3-32	3-33	9-47	9-48
1	64B		64B		12	II	FK	64B	B	12,12C	4	8-25	8-26	8-28	8-29	8-30	8-32	8-33	6-46	6-47

REFERENCE DWG'S.	
BECHTEL NO.	PL. NO.
V-175	B-106515
E-42	A-107191
E-201	D-107350

No.	DATE	REVISIONS	BY	CHK	DESIGN SUPV	ENG	PROJ ENGR	APP'D
A	6/15/84	ISSUED "AS BUILT"	VA			/		
3	1/31/80	REVISED TERM NOS OF SCHEME 1V2576 PER FCR-1798	MPB					
2	2/6/79	ADDED TERM NOS & REMOVED HOLD	BWJ					
1	9/11/78	REVISED & REDRAWN PER LOGIC DIAG V-175 SH 15 & 16 REV 3	JO					
0	3/31/78	ISSUED FOR CONSTRUCTION	YS	MT WSS	AB	UR EK	GP	

SCALE NONE | DESIGNED J. BURROR | DRAWN UCV

PENNSYLVANIA POWER & LIGHT COMPANY
ALLENTOWN, PENNSYLVANIA
SUSQUEHANNA STEAM ELECTRIC STATION – UNIT 1, UNIT 2

BECHTEL – SAN FRANCISCO

SCHEMATIC DIAGRAM-HVAC
REACTOR BLDG VENT SYSTEM
ZONE I & III ISOLATION DAMPER UNIT 1

JOB No.	DRAWING No.	REV.
8856	E-192 SH 12	4

D-107341 SH 12

PRC APERTURE CARD
Doc Control # 830329011 7-136
Date 3/10/83 of Document:
REGULATORY DOCKET FILE

THIS DOCUMENT IS UNDER PP&L ADMINISTRATIVE CONTROL. NO CHANGES CAN BE MADE WITHOUT PRIOR PP&L APPROVAL.

UNCONTROLLED DOCUMENT FOR REFERENCE ONLY

I certify that the microfilmed image contained on this microform were made in the normal and regular course of business. This is a true, full, correct and complete reproduction and replacement for and/or in lieu of original documents generated by the Bechtel group of companies.
Signed DANNY Camera Operator Date 3-23- Camera Type MRG 1

24X

G I C 2 I | S C H E M | R E A C | B L D G | V E N T | S Y S | | W

D

This drawing and the design it covers are the property of BECHTEL. They are merely loaned and on the borrower's express agreement that they will not be reproduced, copied, loaned, exhibited, nor used except in the limited way and private use permitted by any written consent given by the lender to the borrower.

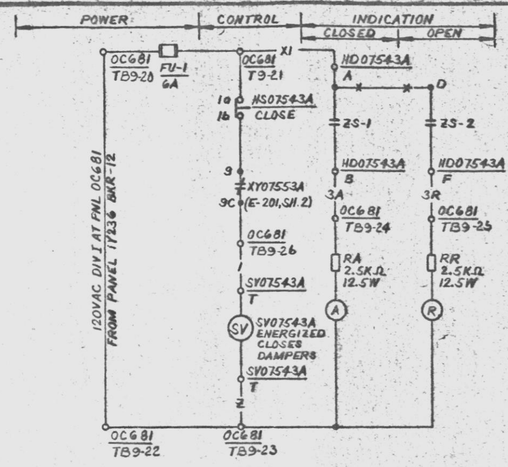

RB ZONE III RECIRC SYS DAMPER HD-07543A

SCHEME Nº 0V2152

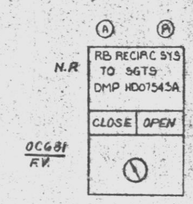

DAMPER POSITION SWITCH DEVELOPMENT

SWITCH	CONTACT Nº		100% OPEN	INTERMIDIATE	100% CLOSED	CONTACT USED
ZS-1 OPEN	ZS-1	A–B				THIS SW
		A–C				SPARE
ZS-2 CLOSED	ZS-2	D–E				SPARE
		D–F				THIS SW

CONTACT CLOSED

AIR OPERATED DAMPER: HD07543A, HD07543B

SWITCH DEVELOPMENT

BLOCK Nº	CONTACT Nº		POSITION OPEN	POSITION CLOSE	DWG Nº
TOP	10 to 16	F		X	THIS SW
	20° °26	B	X		SPARE

SELECTOR SWITCH: HS-07543A, HS-07543B
GE TYPE CR2940
MAINTAINED CONTACTS

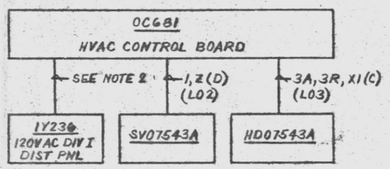

F/C-EK

SCHEME Nº	DAMPER	CONTROL SWITCH Nº	CONTROL SWITCH LOC	ESS DIV	F/C	FUSE Nº	POWER PNL	POWER BKR	SOLENOID VALVE	INTLK'S RELAY	INTLK'S CONTACTS	INTLK'S DWG	TERMINAL Nºs OC681						
0V2152	HD07543A	HS07543A	OC681	I	EK	FU-1	1Y236	12	SV07543A	XY07553A	9, 9C	E-201, SH. 2	9-20	9-21	9-27	9-23	9-24	9-25	9-26
0V2153	HD07543B	HS07543B	OC681	II	FK	FU-2	1Y246	12	SV07543B	XY07553B	9, 9C	E-201, SH. 2	6-20	6-21	6-22	6-23	6-24	6-25	6-26

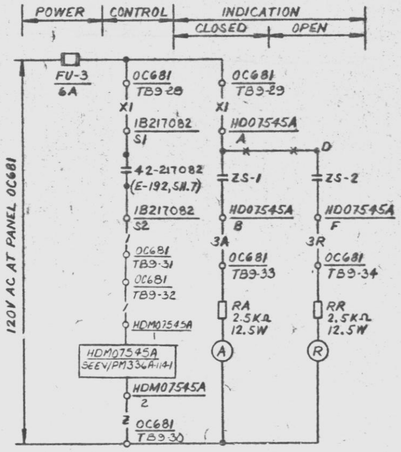

DAMPER POSITION SWITCH DEVELOPMENT

SWITCH	CONTACT Nº		100% OPEN	INTERMEDIATE	100% CLOSED	CONTACT USED
ZS-1 OPEN	ZS-1	A–B				THIS SW
		A–C				SPARE
ZS-2 CLOSED	ZS-2	D–E				SPARE
		D–F				THIS SW

CONTACT CLOSED

MOTOR OPERATED DAMPER: HD07545A & HD07545B

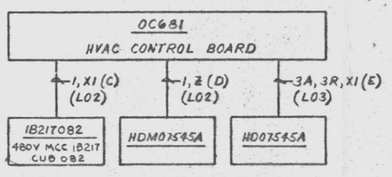

F/C-EK

SCHEME Nº	DAMPER	DAMPER MOTOR	FUSE	ESS DIV	F/C	INTLK'S STARTER LOC	INTLK'S CONTACTS	INTLK'S DWG	TERMINAL Nºs OC681						
0V2150	HD07545A	HDM07545A	FU-3	I	EK	1B217082	S1, S2	E-192, SH.7	9-28	9-29	9-30	9-31	9-32	9-33	9-34
0V2151	HD07545B	HDM07545B	FU-4	II	FK	1B227072	S1, S2	E-192, SH.7	6-28	6-29	6-30	6-31	6-32	6-33	6-34

NOTES:

1. FOR STANDARD SYMBOLS FOR ELECTRICAL DIAGRAMS SEE DWG E-42
2. FOR ESS DIV I 120VAC POWER SUPPLY (1Y236 BKR-12) TO PANEL OC681 REF DWG E-64, SH. 16.
   FOR ESS DIV II 120VAC POWER SUPPLY (1Y246 BKR-12) TO PANEL OC681 REF DWG E-64, SH. 16.

PRC APERTURE CARD

THIS DOCUMENT IS UNDER PP&L ADMINISTRATIVE CONTROL. NO CHANGES CAN BE MADE WITHOUT PRIOR PP&L APPROVAL.

REFERENCE DWG'S.	
BECHTEL NO.	PL. NO.
V-175	B-106515
E-42	A-107191
E-201	D-107350

A	12/4/81	REVISED PANEL NO. (OC682)	VS	MT	AB	UR	GP
A	5/14/79	ADD TERM NOS & REMOVED HOLD	RK	BD			
A	5/5/77	REVISED AS SHOWN	WDS	LEB	RAB		
3	9/16/76	ISSUED "AS BUILT"	VA	FMH			
A	4/14/76	ISSUED FOR CONSTRUCTION	VS JB	MT WSG	AB	UR ER	GP
NO.	DATE	REVISIONS	BY	CHK	DESIGN SUPV.	ENG'G	PROJ. ENGR.

SCALE NONE | DESIGNED J. BURROR | DRAWN UCV

PENNSYLVANIA POWER & LIGHT COMPANY
ALLENTOWN, PENNSYLVANIA
SUSQUEHANNA STEAM ELECTRIC STATION – UNIT 1, UNIT 2

BECHTEL – SAN FRANCISCO

SCHEMATIC DIAGRAM–HVAC
REACTOR BLDG VENT SYSTEM
RECIRC SYSTEM DAMPERS–COMMON

JOB No.	DRAWING No.	REV.
8856	E-192 SH 11	5

D-107341 SH 11

Docket # 50-387
Control # 8203220117-127
Date 3/10/83 of Document:
REGULATORY DOCKET FILE

UNCONTROLLED DOCUMENT FOR REFERENCE ONLY

G½C21 | SCHEM REAC BLDG VENT SYS | W

24X

I certify that the microfilmed image contained on this microform were made in the normal and regular course of business. This is a true, full, correct and complete reproduction and replacement for and/or in lieu of original documents generated by the Bechtel group of companies.
Signed _____ Date 6-17-82 Camera Type _____
Camera Operator

D

This drawing and the design it covers are the property of BECHTEL. They are issued and on the borrower's express agreement that they will not be reproduced, copied, loaned, exhibited, nor used except in the limited way and private use permitted by any written consent given by the lender to the borrower.

POWER | CONTROL: MANUAL START, AUTO START, FLOW SWITCH | INDICATION: STOP, AUTO, RUN

480V, 3Ø, 60HZ
MCC 217 CUB 022

480/120V (200 VA)

EMER SWGR & LC RM UNIT COOLER 1V222A

SCHEME NO. 1V2540 [I]

F/C-EP

F/C-EK

ALARM E-332 SH 10 1C681 DIV I (6-1)

ALARM E-332 SH.10 1C681 DIV I (5-3)

EMERG SWGR CLG SYS HI DSCH TEMP

EMERG SWGR FAN 1V222A FAILED

BIS E-185, SH. 11

FAN 1V222A DISABLED

RB EMERG SWGR RMS CLR 1V222A
AUTO
STOP START

SWITCH DEVELOPMENT

BLOCK NO.	CONTACT NO.		POSITION START	POSITION AUTO	POSITION STOP	DWG. NO.
TOP	1a 1b / 2a 2b	F			X	THIS SH
		B	X			THIS SH
	3a 3b / 4a 4b	F			X	SPARE
		B	X			SPARE
BOTTOM	5a 5b / 6a 6b	F		X		THIS SH
		B	X			SPARE
	7a 7b / 8a 8b	F		X		THIS SH
		B	X			SPARE

SELECTOR SWITCH: HS17630A, HS17630B
GE TYPE CR2940 MAINTAINED CONTACTS

PRO APERTURE CARD
UNCONTROLLED DOCUMENT FOR REFERENCE ONLY

NOTES:

1. ALL DEVICE NO'S TO BE SUFFIXED BY STARTER LOCATION NO. UNLESS NOTED OTHERWISE.
2. FOR STANDARD SYMBOLS FOR ELECTRICAL DIAGRAMS SEE DWG. E-42.
3. FOR INTERNAL WIRING OF ELECTRONIC CONTROL REF DWG 8856-M-320-GZ .
4. FIELD TO CHANGE CH AUX RELAY TAG FSLX-17630A TO TSHX-17631A IN MCC RELAY CUB 1B217021.
   FIELD TO CHANGE CH AUX RELAY TAG FSLX-17630B TO TSHX-17631B IN MCC RELAY CUB 1B227051
5. FIELD TO LOCATE & INSTALL RELAY, P & B TYPE MDR4034 REF. E-40, SH SGG
6. FIELD PURCHASED & INSTALLED SURGE ARRESTER G.E. MODEL # VI30PA20B, REF. E-40, SH.10C.

THIS DOCUMENT IS UNDER PP&L ADMINISTRATIVE CONTROL. NO CHANGES CAN BE MADE WITHOUT PRIOR PP&L APPROVAL.

REFERENCE DWGS.

BECHTEL NO.	PL NO.
V-176	B-106516
E-42	A-107191
E-214	D-107363
E-185	D-107344

SCHEME NO.	FAN NUMBER	FAN DESCRIPTION	FAN HP	STARTER LOC	CONTROL SWITCH NUMBER	CONTROL SWITCH LOC	ESS DIV	F/C	FLOW SWITCH	TIME DELAY RELAY NUMBER	TIME DELAY RELAY NUMBER	TIME DELAY RELAY LOC	AUX RELAY NUMBER	AUX RELAY LOC	TEMP SWITCH	INTLK TIMER	INTLK LOC	INTLK CONTACTS	INTLK DWG. NO
1V2540	1V222A	EMER SWGR & LC RM UNIT CLR A	15	1B217022	HS17630A	1C681	I	EK/EP	FSL17630A	62FSLX17630A1	62FSLX17630A2	1B217021	TSHX17631A	1B217021	TSH17631A	G2X4-20304	OC877A-A	5,3	E-214-SH 9
1V2541	1V222B	EMER SWGR & LC RM UNIT CLR B	>15	1B227052	HS17630B	1C681	II	FK/FP	FSL17630B	62FSLX17630B1	62FSLX17630B2	1B227051	TSHX17631B	1B227051	TSH17631B	G2X4-20404	OC878-A	5,3	E-214-SH 9

SCHEMES INTLK'S STARTER	SCHEMES INTLK'S CONTACTS	SCHEMES INTLK'S SCHEME	SCHEMES INTLK'S DWG	INTLKS RELAY	INTLKS LOC	INTLKS CONTACTS	INTLKS DWG	ALARM PANEL	ALARM WINDOW	ALARM DWG	TERMINAL NUMBERS 1C681	BIS DWG	CONTROL XFMR	INTLKS STARTER	INTLKS CONTACTS	INTLKS SCHEME	INTLKS DWG.
1B217022	S1,S2	1V2544	E-192 SH 17	G2XI-20104	OC877A-A	R2,M2	E-214 SH 9	1C681	(G-1) (5-3)	E-332 SH 10	4-6, 4-7, 4-8, 4-9, 4-10, 4-11, 4-12, 4-13, 4-14, 1-5, 1-6	E-185, SH.11	200VA	1B217022	S5,S6	0V1206	E-214 SH.4
1B227052	S1,S2	1V2545	E-192 SH 17	G2X -20204	OC878-A	R2,M2	E-214 SH 9	1C681	(G-1) (5-3)	E-332 SH 13	3-6, 3-7, 4-8, 3-9, 3-10, 3-11, 3-12, 3-13, 3-14, 6-9, 6-10	E-185, SH.12	350VA	1B227052	S5,S6	0V1207	E-214 SH.4

INTLK RELAY	LOC	CONTACTS	DWG	STARTER	LOC	CONTACTS	SWITCH	LOCATION	TERMS	DWG	CABLE
XYX4-07551A	OC877A-A	1H,1G,1H,1J	E-201 SH 2	42-136062	OB136062	S1,S2	HS0B622A	OC681	TB10-57,58	E-214 SH-4	EKOV1450L
XYX1-07551B	OC877B-A	1H,1G,1H,1J	E-201 SH 4	42-146062	OB146062	S1,S2	HS0B622B	OC681	TB5-72,73	E-214 SH 4	FKOV1451M

3	12/1/82	RE-ISSUED "AS BUILT" REV'D TO INCORP. IDCN #2 (DCP 744 REV 4 & DCP 822.1 R/1)	VA			
2	7/23/82	RE-ISSUED "AS-BUILT" INCORP IDCN #3 (DCP 744 REV 0)	VA			
1	4/1/82	ISSUED "AS BUILT"	VA			
A	9/16/82	REVISED TO INCORP FOR E-10818 (DCR 42)	VA			
A	2/1/82	REV'D TO INCORP. IDCN #1 (DCP 396.2 R/0) & DCP 822.1 R/1.	VA			
A	12-13-79	ISSUED FOR CONSTRUCTION	YHS JB	HT WSS	AB	UN EKK GP
NO.	DATE	REVISIONS	BY	CHK	DESIGN SUPV	ENG'G PROJ ENGR APP'D

SCALE NONE | DESIGNED J. BURROR | DRAWN

PENNSYLVANIA POWER & LIGHT COMPANY
ALLENTOWN, PENNSYLVANIA
SUSQUEHANNA STEAM ELECTRIC STATION – UNIT 1, UNIT 2

BECHTEL – SAN FRANCISCO

SCHEMATIC DIAGRAM-HVAC
REACTOR BLDG VENT SYS
EMER SWGR RM UNIT COOLERS UNIT 1

JOB No.	DRAWING No.	REV.
8856	E-192 SH 8	10

D-107341 SH 8

G|C|2| SCHEM REAC BLDG VENT SYS |W

24X

Docket #50-387
Control # 8303280117-128
Date 3/10/83 of Document:
REGULATORY DOCKET FILE

This drawing and the design it covers are the property of BECHTEL. They are merely loaned and on the borrower's express agreement that they will not be reproduced, copied, loaned, exhibited, nor used except in the limited way and private use permitted by any written consent given by the lender to the borrower.

POWER | ALARM RELAY | CONTROL: MANUAL START, AUTO START | INDICATION: STOP, AUTO, ST BY, RUN | GRD FAULT RELAY

480V, 3Ø, 60HZ
MCC 1B217 CUB 082

FOR SCHEME NO. OV2121 ONLY

REACTOR BLDG ZONE III RECIRC FAN OV201A

SCHEME NO. OV2100 [I]

F/C-EP

F/C-EK

ALARM E-332 SH. 3
OC681 (13-2) DIV

RB RECIRC FAN OV201A FAILED

BIS INPUT
E-185 SH.15 (2) E-185 SH.17

UNIT 2 — FAN OV201A DISABLED
UNIT 1 — FAN OV201A DISABLED

RB RECIRC SYS DWP HD74548
FAN OV201B
STOP | STBY | AUTO LEAD | START

SEE NOTE 3

SWITCH DEVELOPMENT

BLOCK NO.	CONTACT NO.		POSITION: START	AUTO	ST BY	STOP	DWG. NO.
TOP	1a 1b / 2a 2b	F		X			THIS SH
		B	X				THIS SH
	3a 3b / 4a 4b	F		X			THIS SH
		B	X				SPARE
BOTTOM	5a 5b / 6a 6b	F				X	THIS SH
		B			X		THIS SH
	7a 7b / 8a 8b	F				X	THIS SH
		B			X		THIS SH

SELECTOR SWITCH: HS07542A, HS07542B
GE TYPE CR2940
MAINTAINED CONTACTS

NOTES:
1. ALL DEVICE NO'S TO BE SUFFIXED BY STARTER LOCATION NO. UNLESS NOTED OTHERWISE.
2. FOR STANDARD SYMBOLS FOR ELECTRICAL DIAGRAMS SEE DWG. E-42.
3. FOR DAMPER DETAILS REFER TO DWG. E-192 SH. 11

SCHEME NO.	FAN: NUMBER	FAN: DESCRIPTION	FAN: HP	STARTER LOC	CONTROL SWITCH: NUMBER	CONTROL SWITCH: LOC	ESS DIV.	F/C	DIFF PRESS SWITCH	TIME DELAY RELAY: NUMBER	TIME DELAY RELAY: NUMBER	TIME DELAY RELAY: LOC	ALARM: PANEL	ALARM: WINDOW	ALARM: DWG	BIS DWG
OV2100	OV201A	REACTOR BLDG ZONE III RECIRC FAN A	75	1B217082	HS07542A	OC681	I	EK/EP	PDSL07544B	82PDSLXD7544A1	82PDSLXD7544A2	1B217081	OC681 DIV I	13-2	E-332 SH. 3	E-185 SH 11 & 28
OV2101	OV201B	REACTOR BLDG ZONE III RECIRC FAN B	75	1B227072	HS07542B	OC681	II	FK/FP	PDSL07544B	82PDSLXD7544B1	82PDSLXD7544B2	1B227071	OC681 DIV II	13-2	E-332 SH. 7	E-185 SH 12 & 26

SCHEMES INTLK'D: STARTER	CONTACTS	SCHEME	DWG	TERMINAL NOS. OC681						
1B217082	S1,S2	OV2150	E-192 SH 11	9-7	9-8	9-9	9-10	9-11	9-12	9-13
1B227072	S1,S2	OV2151	E-192 SH 11	6-7	6-8	6-9	6-10	6-11	6-12	6-13

REFERENCE DWGS.

BECHTEL NO.	PL NO.
V-175	B-106515
E-42	A-107191

NO.	DATE	REVISIONS	BY	CHK	DESIGN SUPV	ENG	PROJ ENGR	APPD
A	7/3/79	REVISED TO INCORPORATE DCN #DXP-395-20 (A.O.)	RBD	NRM	NA			
A	9/1/80	INCORPORATED FOR E-1331 AS BUILT ADDED TERM NOS & HS NAMEPLATE (OLNF)	EK	NCA				
A	12/4/81	REVISED AS SHOWN PER LOGIC DIAGRAM V-175 SH 9 REV 5	EK	WJB	WJB			
A	7/1/82	ISSUED 'AS BUILT'	VA	JB				
A	10-15-82	ISSUED FOR CONSTRUCTION	VRS JS	WSS MT	MB	ENG UA	UP	

SCALE: NONE | DESIGNED: J. BURROW | DRAWN:

PENNSYLVANIA POWER & LIGHT COMPANY
ALLENTOWN, PENNSYLVANIA
SUSQUEHANNA STEAM ELECTRIC STATION — UNIT 1, UNIT 2

BECHTEL — SAN FRANCISCO

SCHEMATIC DIAGRAM HVAC
REACTOR BLDG VENT SYS
ZONE III RECIRC FANS - COMMON

JOB No.	DRAWING No.	REV.
8856	E-192 SH 7	5

D-107341 SH 7

PRC APERTURE CARD
Docket # 50-387
Control # 8303220117-129
Date 3/10/83 of Document:
REGULATORY DOCKET FILE

THIS DOCUMENT IS UNDER PP&L ADMINISTRATIVE CONTROL. NO CHANGES CAN BE MADE WITHOUT PRIOR PP&L APPROVAL.

UNCONTROLLED DOCUMENT FOR REFERENCE ONLY

24X

I certify that the microfilmed image contained on this microform were made in the normal and regular course of business. This is a true, full, correct and complete reproduction and replacement for and/or in lieu of original documents prepared by the Bechtel group of companies.
Signed: RHEY Date: 6/10/82 Camera Type: MRG-1
Camera Operator

D

This drawing and the design it covers are the property of BECHTEL. They are issued in strict confidence and shall not be reproduced, copied, loaned, exhibited, used or otherwise disposed of in whole or in part without the written consent of BECHTEL, and any use made of them beyond the scope of the purpose for which they were obtained, or any such use not permitted by duly executed instrument or agreement, is prohibited. They are expressly issued and accepted subject to the foregoing and to the further express agreement that they will not be loaned and on the request of BECHTEL or when no longer needed for the purpose for which they were furnished, they will be returned promptly to BECHTEL. Any rights in inventions which may be disclosed in this drawing are reserved. No use of any kind may be made of such inventions except as may be expressly permitted by duly executed instrument or agreement between the parties hereto, or in the absence of such instrument or agreement, by duly executed instrument granting a license under such inventions. Neither receipt nor possession thereof confers or transfers any right in or license to use the inventions which may be disclosed therein, nor any right to reproduce this drawing or any part thereof, or to manufacture anything shown therein, or to disclose or allow anyone else to disclose the same for any purpose whatsoever, without the written permission of BECHTEL.

HV-E32-2F001B
Z5-6
(E-189, SH 6)

1, X1, (C) (NOTE 6)
(LO2)
TYPICAL, FOR CABLE D THRU P
SEE TABLE BELOW

2C644
MSIV LEAKAGE CONTROL SYSTEM V.P. DIV. II

X1, X2, X3, X4, Z (B)
(LO5)

FLOW XMTR FT-E32-2N033D | FLOW XMTR FT-E32-2N033F | FLOW XMTR FT-E32-2N033K | FLOW XMTR FT-E32-2N033P

TB-2C074-A1 MSIV LEAKAGE CONTROL SYSTEM PANEL DIV II

F/C-FK
POWER SUPPLY TO FLOW TRANSMITTERS
SCHEME NO 2Q6523
REF. SH. 3 & 5.5A

HV-E32-2F006 Z5-6 | HV-E32-2F007 Z5-6

1, 2 (C) (NOTE 6) (LO1)
3, 4 (D) (NOTE 6) (LO2)

2C644
MSIV LEAKAGE CONTROL SYSTEM V.B DIV I

5, 6 (E) (NOTE 6) (LO1)
7, 8 (F) (NOTE 6) (LO2)

HV-E32-2F008 Z5-6 | HV-E32-2F009 Z5-6

F/C - EK
MSIV LEAKAGE CONTROL SYSTEM INTERLOCK [I]
SCHEME NO 2Q6523
REF SH. 7

2C645
MSIV LEAKAGE CONTROL SYSTEM V.B. DIV. I

1, 2, 3, 4, 5, 6 (C) (Q26)
7, 8 (D) (Q24)

PRESS XMTR PT-E32-2N055 | PRESS XMTR PT-E32-2N056 | DIFF PRESS XMTR FT-E32-2N059

TB-2C073-A1 MSIV LEAKAGE CONTROL SYSTEM PANEL DIV I

TB2C004-C1
PRESS XMTR PT-E32-2N058
REAC VESSEL LEVEL & PRESS 'A' PANEL

F/C-EM
MSIV LEAKAGE CONTROL SYSTEM INSTRUMENTATION [I]
SCHEME NO 2Q6525
REF. SH. 4

TE-E32-2N005B | TE-E32-2N005F | TE-E32-2N005K | TE-E32-2N005P — BY VENDOR

TB0207 (SEE NOTE 5)

1, 2 (C) (TQ8) (NOTE 2) | 3, 4 (D) (TQ8) (NOTE 2) | 5, 6 (E) (TQ8) (NOTE 2) | 7, 8 (F) (TQ8) (NOTE 2)

TB2C003-A3
PRESS XMTR PT-E32-2N050 | PRESS XMTR PT-E32-2N060
REAC VESSEL LEVEL & PRESS 'B' PANEL

9, 10, 11, 12 (G) (Q25)

2C644
MSIV LEAKAGE CONTROL SYSTEM V.P. DIV II

13, 14, 15, 16 (H) (Q25) | 17, 18, 19, 20 (J) (Q25) | 21, 22, 23, 24, 25, 26, 27, 28, 29, 30, 31, 32, 33, 34 (K) (Q27) | 35, 36, 37, 38 (L) (Q25)

FLOW XMTR FT-E32-2N033B | FLOW XMTR FT-E32-2N033F | FLOW XMTR FT-E32-2N033K | FLOW XMTR FT-E32-2N033P | PRESS XMTR PT-E32-2N051D | PRESS XMTR PT-E32-2N051F | PRESS XMTR PT-E32-2N051K | PRESS XMTR PT-E32-2N051P | PRESS XMTR PT-E32-2N061D | PRESS XMTR PT-E32-2N061F | PRESS XMTR PT-E32-2N061K | PRESS XMTR PT-E32-2N061P | DIFF. P. XMTR FT-E32-2N054

MSIV LEAKAGE CONTROL SYSTEM PANEL — TB-2C074-A1

39, 40, 41 (M) (Q28) | 42, 43, 44 (N) (Q28) | 45, 46, 47 (P) (Q28) | 48, 49, 50 (Q) (Q28)

FLOW ELEMENT FE-E32-2N006B | FLOW ELEMENT FE-E32-2N006F | FLOW ELEMENT FE-E32-2N006K | FLOW ELEMENT FE-E32-2N006P

F/C-FM
MSIV LEAKAGE CONTROL SYSTEM INSTRUMENTATION [II]
SCHEME NO 2Q6527
REF. SHTS 4 & 7

NOTES:
1. FOR STANDARD SYMBOLS FOR ELECTRICAL DIAGRAM SEE DWG E-42...
2. THERMOCOUPLE CABLE SHIELD SHOULD BE GROUNDED AT TERMINAL BOX ONLY.
3. DESIGN BASED ON GE-APED ELEMENTARY 851E708AE(8856-M1-E32-L)
4. FOR 120VAC POWER SUPPLY SEE DWG. E-64 SH.25.
5. FIELD TO PROVIDE CHROMEL ALUMEL TERMINAL BLOCK
6. CABLES FOR FOLLOWING VALVES SHALL HAVE MINIMUM SEPARATION OF SIX INCHES OR RUN IN CONDUIT:
   - HV-E32-2F001B FROM HV-E32-2F002B
   - HV-E32-2F001F FROM HV-E32-2F002F
   - HV-E32-2F001K FROM HV-E32-2F002K
   - HV-E32-2F001P FROM HV-E32-2F002P
   - HV-E32-2F006 FROM HV-E32-2F007
   - HV-E32-2F008 FROM HV-E32-2F009

F/C	SCHEME NO.	MOTOR OPERATED VALVE NO.	MOTOR OPERATED VALVE DESCRIPTION	CABLE NO.	WIRE NO.
FK	2Q6523	HV-E32-2F001B	MSIV INBOARD STM LINE A	C	1,X1
		1F	B	D	4,X2
		1K	C	E	7,X3
		1P	D	F	10,X4
		HV-E32-2F002B	MSIV INBOARD STM LINE A	G	2,X1
		2F	B	H	5,X2
		2K	C	J	8,X3
		2P	D	K	11,X4
		HV-E32-2F003B	MSIV BLEEDER BYPASS VLV A	L	3,X1
		3F	B	M	6,X2
		3K	C	N	9,X3
		3P	D	P	12,X4

HV-B21-2F022A (25-13) | HV-B21-2F022B (25-13) | HV-B21-2F022C (25-13) | HV-B21-2F022D (25-13)

1.2 (C) (LO2) (6) | 3.4 (E) (LO2) (6) | 5.6 (G) (LO2) (6) | 7.8 (J) (LO2) (6)

2W1068

1.2 (D) (LO2) | 3.4 (F) (LO3) | 5.6 (H) (LO3) | 7.8 (K) (LO2)

2C644
MSIV LEAKAGE CONTROL V.B DIV II

F/C-FK
MSIV LEAKAGE CONTROL SYSTEM CONTROL [II]
SCHEME NO 2Q6551
REF. SH. 5

REFERENCE DWG'S.	
BECHTEL NO.	PL. NO.
E-42	A-107191
8856-M1-E32-2	FF127050

PRC APERTURE CARD

UNCONTROLLED DOCUMENT FOR REFERENCE ONLY

NO.	DATE	REVISIONS	BY	CHK	SUPV	ENG'G	PROJ ENGR	APP'D
4	10/5/82	ADDED BLOCK DIAGRAM. CABLES PER DCP 659.2	JC	JH				
3	10/5/82	ADDED NOTES. PER DCP 608	JC	CLS				
2	6/5/82	REV TO INCORP FCN E-3388	JC	JH				
1	3/5/82	REV SCHEME NO PER DCP #659.2 R1	NG	TN				
0	1/27/81	ISSUED FOR CONSTRUCTION	MS	MB				

SCALE NONE | DESIGNED A. SANCHEZ | DRAWN M.P. SANTOS

PENNSYLVANIA POWER & LIGHT COMPANY
ALLENTOWN, PENNSYLVANIA
SUSQUEHANNA STEAM ELECTRIC STATION – UNIT 1, UNIT 2

BECHTEL – SAN FRANCISCO

SCHEMATIC DIAGRAM
MSIV LEAKAGE CONTROL SYSTEM INSTRUMENTATION UNIT 2

JOB No.	DRAWING No.	REV.
8856	E-189 SH. 10	6

D-107338 SH.10

G2P3B SCHEM MSIV LEAKAGE CONT SYS W

Docket # 50-387
Control # 8303220117-130
Date 3/10/83 of Document:
REGULATORY DOCKET FILE

D

24X

I certify that the microfilmed image contained on this microform were made in the normal and regular course of business. This is a true, full, correct and complete reproduction and record made for and/or in lieu of original documents.

RHEY MRG-II

This drawing and the design it covers are the property of BECHTEL. They are merely loaned and on the borrower's express agreement that they will not be reproduced, copied, loaned, exhibited, nor used except in the limited way and private use permitted by any written consent given by the lender to the borrower.

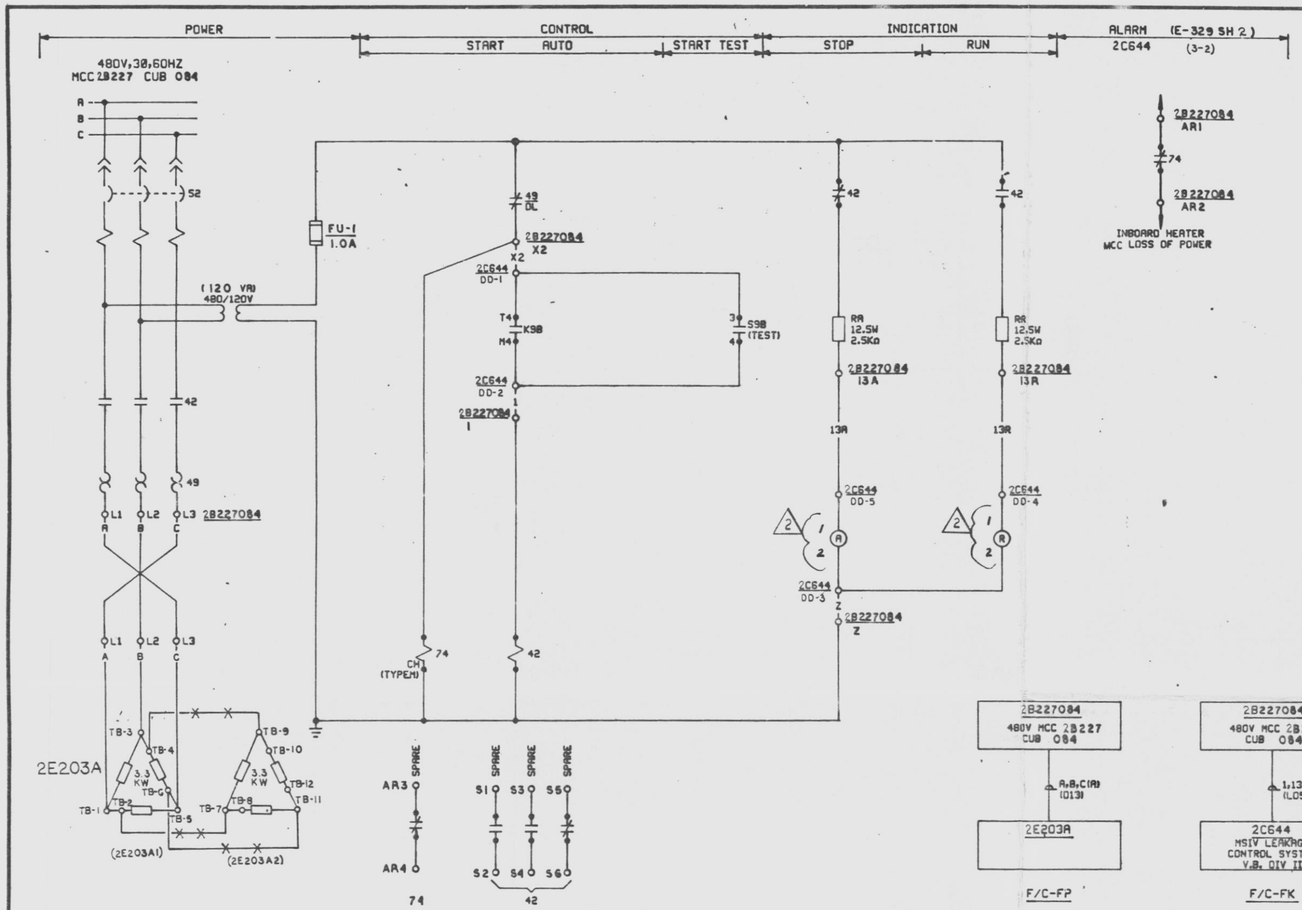

2C644 F.V.

A	R
NORMAL	E32-B001B TEST

BLOCK NO.	CONTACT NO.		POSITION NORM	POSITION TEST	DWG. NO.
TOP	1 o 1 o 2 / 3 o o 4	F	X		SPARE
		B		X	THIS SH.

TEST SWITCH (S9B)

GENERAL ELECTRIC TYPE CR2940
MAINTAINED CONTACT
(TYPICAL FOR S9F S9K S9P)

NOTES:

1. FOR STANDARD SYMBOLS FOR ELECTRICAL DWGS. SEE E-42
2. ALL DEVICE NUMBERS TO BE SUFFIXED BY STARTER LOCATION NUMBER UNLESS OTHERWISE NOTED
3. DESIGN BASED ON GE-APED ELEMENTARY 851E708AE (8856-M1-E32-2(G)-1)

PIPE HEATER A - 2E203A

SCHEME NO 2Q6519

REFER SH. NO. 6

F/C	ESS DIV	SCHEME NO	PIPE HEATER NO	PIPE HEATER DESCRIPTION	PIPE HEATER KW	STARTER LOCATION	INTERLOCK RELAY NO.	INTERLOCK CONTACT	INTERLOCK LOCATION	2C644 TERMINAL NOS DD-1	DD-2	DD-3	DD-4	DD-5	GE EQUIP. NO.	TEST SW. NO.
FK/FP	II	2Q6519	2E203A	PIPE HEATER A	6.6	2B227084	K9B	T4, M4	2C644		7	8	9	10	11	E32-B001B	S9B
FK/FP	II	2Q6520	2E203B	PIPE HEATER B	6.6	2B227094	K9F	T4, M4	2C644		13	14	15	16	17	E32-B001F	S9F
FK/FP	II	2Q6521	2E203C	PIPE HEATER C	6.6	2B226114	K9K	T4, M4	2C644		19	20	21	22	23	E32-B001K	S9K
FK/FP	II	2Q6522	2E203D	PIPE HEATER D	6.6	2B226124	K9P	T4, M4	2C644							E32-B001	S9P

REFERENCE DWGS.	
BECHTEL NO.	PL NO.
E-42	A-107191
8856-M1-E32-2(G)	FF 127050
E-329	D-107478

Docket # 50-387
Control # 8503220117
Date 3/10/83 of Document:
REGULATORY DOCKET FILE

UNCONTROLLED DOCUMENT
FOR REFERENCE ONLY

PRC APERTURE CARD

NO.	DATE	REVISIONS	BY	CHK'R	DESIGN SUPV	ENG'R	PROJ ENGR	APP'D
2	11/15/82	ADDED LOTS, TERM AND SWITCH DEV. (DCR-42)	MPS					
1	11/9/82	ADDED 2C644 & HEATER TERM NO (DCR 9)	MPS					
0	3/9/77	ISSUED FOR CONSTRUCTION						

SCALE NONE | DESIGNED A SANCHEZ | DRAWN M.H.YOUNG

PENNSYLVANIA POWER & LIGHT COMPANY
ALLENTOWN, PENNSYLVANIA
SUSQUEHANNA STEAM ELECTRIC STATION – UNIT 1, UNIT 2

BECHTEL – SAN FRANCISCO

SCHEMATIC DIAGRAM MSIV LEAKAGE CONTROL SYSTEM PIPE HEATERS UNIT 2

JOB No.	DRAWING No.	REV.
8856	E-189 SH 9	2

D-107338 SH 9

G2P35 SCHEM PIPE HEATERS W

24X
I certify that the microfilmed image contained on this microform were made in the normal and regular course of business. This is a true, full, correct and complete reproduction and replacement for and/or in lieu of original documents generated by the Bechtel group of companies.
Signed: Camera Operator Date 11-30-81 Camera Type XRG I

This drawing and the design it covers are the property of BECHTEL. They are merely loaned and on the borrower's express agreement that they will not be reproduced, copied, loaned, exhibited, nor used except in the limited way and private use permitted by any written consent given by the lender to the borrower.

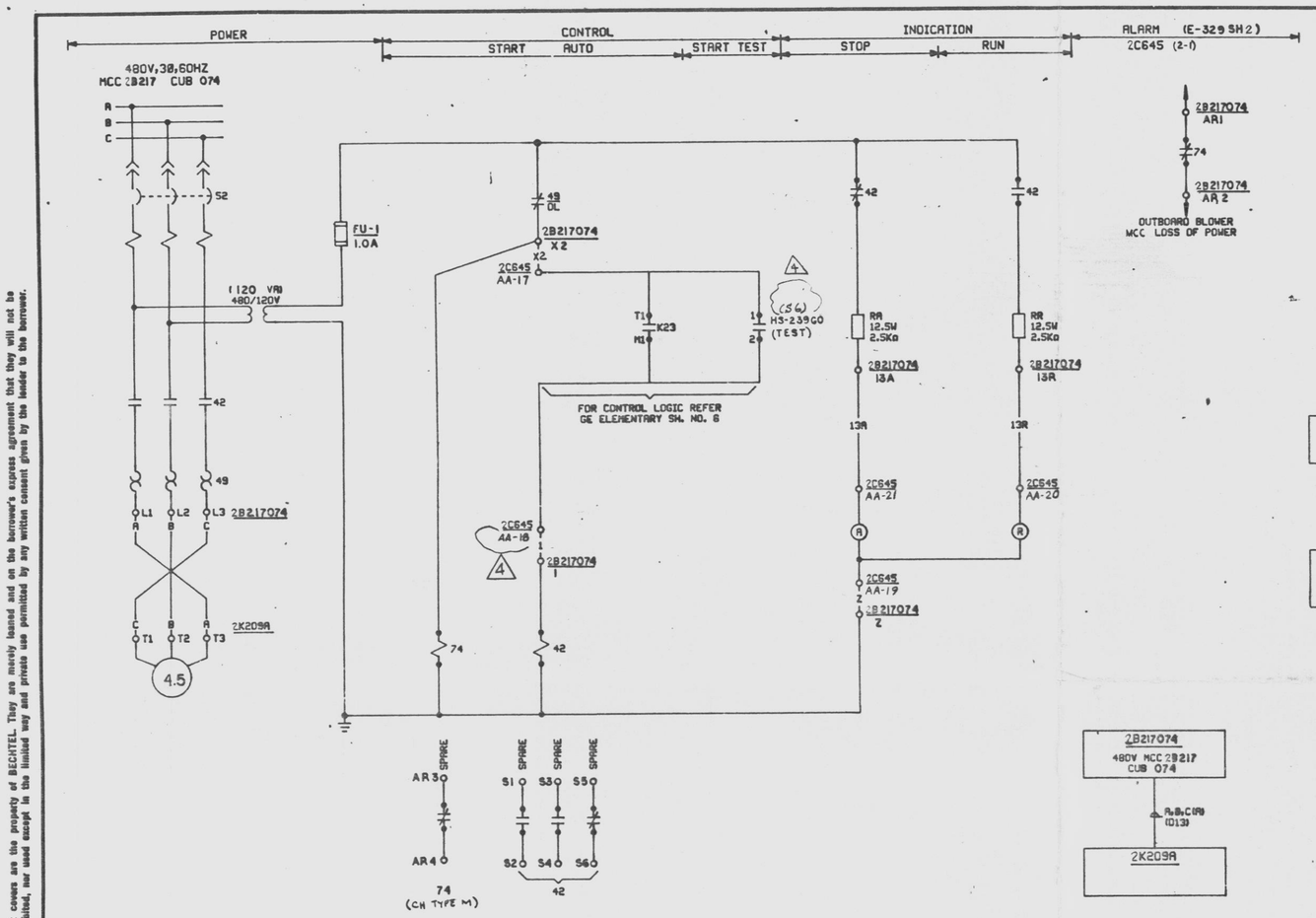

OUTBOARD SYSTEM AIR BLOWER 2K209A [I]

SCHEME NO 2Q6518
REFER. SH. NO. 6

F/C	SCHEME NO	AIR BLOWER NO	AIR BLOWER DESCRIPTION	HP	STARTER LOCATION	ESS DIV	INTERLOCK RELAY NO.	INTERLOCK CONTACT	INTERLOCK LOCATION	2C645 TERMINAL NO'S						SE SW.NO	G.E. EQUIPMENT NO.
EK/EP	2Q6518	2K209A	OUTBOARD SYSTEM AIR BLOWER	4.5	2B217074	I	K23	T1, M1	2C645	AA-18	AA-21	AA-20	AA-17	AA-19	9-11-9	SE-1	E-32-C002E
EK/EP	2Q6528	2K209B	OUTBOARD SYSTEM AIR BLOWER	4.5	2B236073	I	K23	T3, M3	2C645	AA-24	AA-27	AA-26	AA-23	AA-24	2-11-8	SE-2	E-32-C002A

REFERENCE DWGS.	
BECHTEL NO.	PL NO.
E-42	A-107191
8856-M1-E32-2(4)	FF-127050
E-185	D-107334
E-329	D-107478

NOTES:

1. FOR STANDARD SYMBOLS FOR ELECTRICAL DWGS. SEE E-42
2. ALL DEVICE NUMBERS TO BE SUFFIXED BY STARTER LOCATION NUMBER UNLESS OTHERWISE NOTED
3. DESIGN BASED ON GE-APED ELEMENTARY 851E708AE (8856-M1-E32-216)

NO.	DATE	REVISIONS	BY	CHK	DESIGN SUPV	ENG MGR	PROJ MNGR	APP'S
5	11/21/91	REVISED TERM. POINTS & INCORP SCH #1 (DCR 9)	KB	EE	RB	/		
4	1/9/90	CHANGED S6 TO HS-23960 (DCR 9)	MPS	RP	MK			
3	7/18/88	REVISED MCC CUBICLE NO.	mps	TH	RB			
2	7/7/88	ADDED CABLE CODE	MS	TH	TH			
1	7/7/87	ISSUED FOR CONSTRUCTION	MS	TH	RB			

SCALE NONE | DESIGNED A. SANCHEZ | DRAWN M.H.YOUNG

PENNSYLVANIA POWER & LIGHT COMPANY
ALLENTOWN, PENNSYLVANIA
SUSQUEHANNA STEAM ELECTRIC STATION – UNIT 1, UNIT 2

BECHTEL – SAN FRANCISCO

SCHEMATIC DIAGRAM MSIV LEAKAGE CONTROL SYSTEM OUTBOARD SYSTEM AIRBLOWER UNIT 2

JOB No.	DRAWING No.	REV.
8856	E-189 SH 8	4

D-107338 SH 8

G2P35 SCHEM OUTBOARD SYS AIRBLWR W

PRC APERTURE CARD

UNCONTROLLED DOCUMENT FOR REFERENCE ONLY

Docket #50-387
Control #8803220117-130
Date 3/10/88 of Document:
REGULATORY DOCKET FILE

24X

I certify that the microfilmed image contained on this microform were made in the normal and regular course of business. This is a true, full, correct and complete reproduction and replacement for and/or in lieu of original documents generated by the Bechtel group of companies.
Signed: [illegible] Camera Operator Date 11-30-21 Camera Type MRC I

D

This drawing and the design it covers are the property of BECHTEL. They are merely loaned and on the borrower's express agreement that they will not be reproduced, copied, loaned, exhibited, nor used except in the limited way and private use permitted by any written consent given by the lender to the borrower.

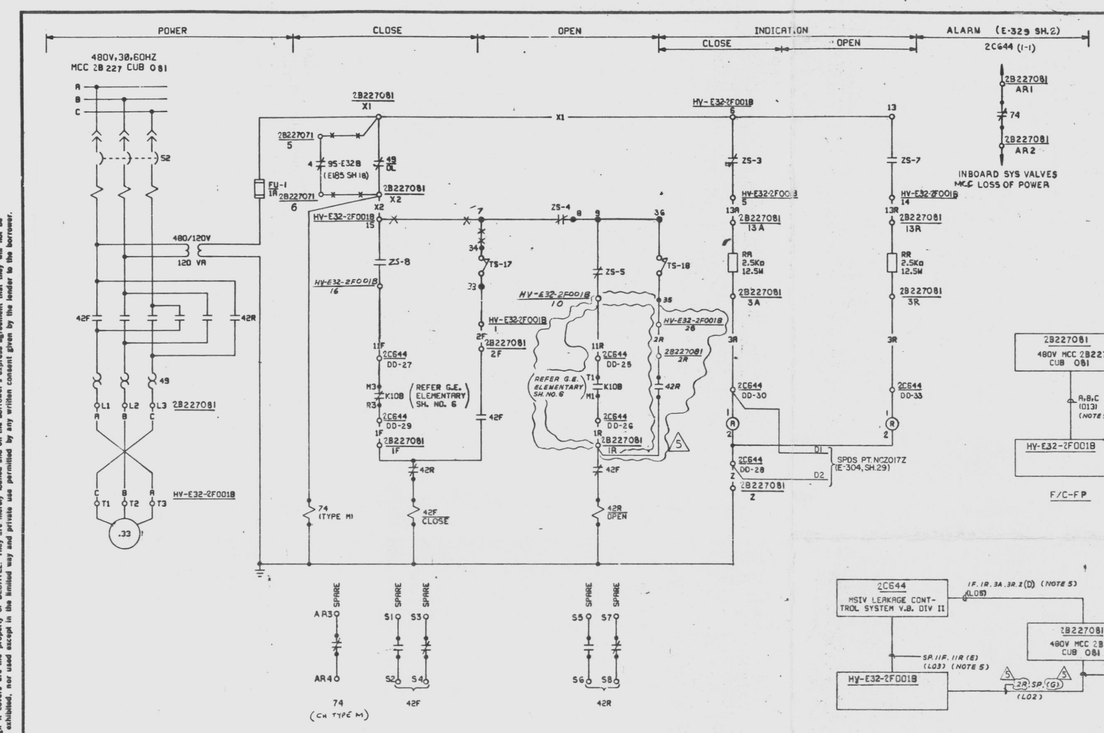

MSIV LEAKAGE CONTROL INBOARD SYSTEM VLV HV-E32-2F001B III

SCHEME NO 2Q6501

REFER SH. NO. 6

F/C	SCHEME NO	MOTOR OPERATED VALVE NO	MOTOR OPERATED VALVE DESCRIPTION	HP	STARTER LOCATION	ESS DIV	INTERLOCK RLY NO	INTERLOCK TEST SW	INTERLOCK LOC	INTERLOCK NO	INTERLOCK LOC	TERMINAL NOS IIR	IR	IIF	X	3R	3A	IF	MCC O/L BYPASS	SPDS PT.	SPDS WIRE NO.	SPDS REF. DWG.
FK/FP	2Q6501	HV-E32-2F001B	INBOARD SYSTEM VALVE	0.33	2B227081	II	K10B	2B23008	2C644	95-E32B (4)	2B227071	DD-25	DD-26	DD-27	D3-28	DD-33	DD-30	DD-29	5	6	NCZ017Z	DI,D2	E-304,SH29
FK/FP	2Q6502	HV-E32-2F001F	INBOARD SYSTEM VALVE	0.33	2B227091	II	K10F	01F		95-E32F (4)		47	48	49	50	52	53	51	23	24	NCZ019Z	D3,D4	E-304,SH29
FK/FP	2Q6503	HV-E32-2F001K	INBOARD SYSTEM VALVE	0.33	2B226111	II	K10K	01K		95-E32K (4)	2B226101	71	72	73	74	79	76	75	3	4	NCZ021Z	D5,D6	E-304,SH29
FK/FP	2Q6504	HV-E32-2F001P	INBOARD SYSTEM VALVE	0.33	2B226121	II	K10P	01P		95-E32P (4)		95	96	97	98	102	100	99	21	22	NCZ023Z	D7,D8	E-304,SH29
FK/FP	2Q6505	HV-E32-2F002B	INBOARD SYSTEM VALVE	0.33	2B227082	II	K11B	01B		95-E32B (5)	2B227071	BB-28	BB-29	BB-30	BB-31	BB-34	BB-33	BB-32	11	12	NCZ018Z	F1,F2	E-304,SH29
FK/FP	2Q6506	HV-E32-2F002F	INBOARD SYSTEM VALVE	0.33	2B227092	II	K11F	01F		95-E32F (5)		39	36	37	38	41	40	39	29	30	NCZ020Z	F3,F4	E-304,SH29
FK/FP	2Q6507	HV-E32-2F002K	INBOARD SYSTEM VALVE	0.33	2B226112	II	K11K	01K		95-E32K (5)	2B226101	42	43	44	43	48	47	46	11	12	NCZ022Z	E1,E2	E-304,SH29
FK/FP	2Q6508	HV-E32-2F002P	INBOARD SYSTEM VALVE	0.33	2B226122	II	K11P	01P		95-E32P (5)		49	50	51	52	55	54	53	29	30	NCZ024Z	E3,E4	E-304,SH29
FK/FP	2Q6509	HV-E32-2F003B	FLOW XMTR BYPASS VALVE	0.33	2B227083	II	K12B	03B		95-E32B (6)	2B227071	DD-41	DD-42	DD-43	DD-44	DD-40	DD-45	DD-45	13	14			
FK/FP	2Q6510	HV-E32-2F003F	FLOW XMTR BYPASS VALVE	0.33	2B227093	II	K12F	03F		95-E32F (6)		64	65	66	67	70	69	68	31	32			
FK/FP	2Q6511	HV-E32-2F003K	FLOW XMTR BYPASS VALVE	0.33	2B226113	II	K12K	03K		95-E32K (6)	2B226101	98	89	90	91	94	93	92	13	14			
FK/FP	2Q6512	HV-E32-2F003P	FLOW XMTR BYPASS VALVE	0.33	2B226123	II	K12P	03P	↓	95-E32P (6)		111	112	113	114	117	116	115	31	32			
EK/EP	2Q6513	HV-E32-2F006	OUTBOARD SYS BLEED VALVE	0.33	2B217091	I	K20	06	2C645	95-E32 (4)	2B217083	AA-82	AA-83	AA-84	AA-85	AA-86	AA-87	AA-81	7	8			
EK/EP	2Q6514	HV-E32-2F007	OUTBOARD SYS BLEED VALVE	0.33	2B217092	I	K21	06		95-E32 (5)		38	39	40	41	42	43	44	11	12			
EK/EP	2Q6515	HV-E32-2F008	OUTBOARD SYS DEPRESSURE VALVE	0.33	2B217093	I	K18	08		95-E32 (6)		91	92	93	94	95	96	90	13	14			
EK/EP	2Q6516	HV-E32-2F009	OUTBOARD SYS DEPRESSURE VALVE	0.33	2B217094	I	K19	08	↓	95-E32 (7)		52	53	54	53	56	57	58	15	16			

VALVE LIMIT SWITCH DEVELOPMENT

CONTACTS		100% OPEN	INTERMEDIATE	100% CLOSED	CONTACT USED
ZS-1	1 — #2				SPARE
ZS-2	3 — #4				SPARE
ZS-3	5 — #6				THIS SH.
ZS-4	7 — #8				THIS SH.
ZS-5	9 — #10				THIS SH.
ZS-6	11 — #12				E-189-10
ZS-7	13 — #14				THIS SH.
ZS-8	15 — #16				THIS SH.
ZS-9	17 — #18				SPARE
ZS-10	19 — #20				
ZS-11	21 — #22				
ZS-12	23 — #24				
ZS-13	25 — #26				
ZS-14	27 — #28				
ZS-15	29 — #30				
ZS-16	31 — #32				
TS-17	33 — 34	OPEN ON HIGH CLOSING TORQUE			THIS SH.
TS-18	35 — 36	OPEN ON HIGH OPENING TORQUE			THIS SH.

CONTACT CLOSED

MOTOR OPERATED VALVES SEE TABLE

NOTES:

1. FOR STANDARD SYMBOLS FOR ELECTRICAL DWGS, SEE E-42.
2. ALL DEVICE NUMBERS TO BE SUFFIXED BY STARTER LOCATION NUMBER UNLESS OTHERWISE NOTED.
3. DESIGN BASED ON GE-APED ELEMENTARY 851E708AE (8856-MI-E32-2(S)-1).
4. FOR SPACE HEATER SEE E-241, SH.13.
5. CABLES FOR FOLLOWING VALVES SHALL HAVE MINIMUM SEPARATION OF SIX INCHES OR RUN IN CONDUIT:
   HV-E32-2F001B FROM HV-E32-2F002B
   HV-E32-2F001F FROM HV-E32-2F002F
   HV-E32-2F001K FROM HV-E32-2F002K
   HV-E32-2F001P FROM HV-E32-2F002P
   HV-E32-2F006 FROM HV-E32-2F007
   HV-E32-2F008 FROM HV-E32-2F009

P.R.C APERTURE CARD

UNCONTROLLED DOCUMENT FOR REFERENCE ONLY

REFERENCE DWGS.	
BECHTEL NO.	PL NO.
E-42	A-107191
8856-MI-E32-2	FF127050
E-185	D-107334
E-329	D-107478

NO.	DATE	REVISIONS	BY	CHK	DESIGN SUPV.	ENGR'G MGR.	APP'D
4	4/11/83	REVISED PER DCP 538.2E (REV.1) & 411.13 ADDED NOTE 5. PER DCP 648	NG				
3	1/5/83		JC	CA			
2	11/7/82	REVISED MCC TERM PTS (DCR 42) MCC2B = 5, X2 = 1 (DCR 49)					
1	4/4/82	REV PER DCP 411-13	JC				
0	7/6/81	ISSUED FOR CONSTRUCTION					

SCALE NONE | DESIGNED A. SANCHEZ | DRAWN M.H.YOUNG | DATE 12/80

PENNSYLVANIA POWER & LIGHT COMPANY
ALLENTOWN, PENNSYLVANIA
SUSQUEHANNA STEAM ELECTRIC STATION UNIT 1, UNIT 2
BECHTEL - SAN FRANCISCO

SCHEMATIC DIAGRAM
MSIV LEAKAGE CONTROL SYSTEM
INBOARD SYSTEM VALVE UNIT 2

JOB No.	DRAWING No.	REV.
8856	E-189 SH 6	5

D-107338 SH 6

Docket #50-387
Control #830322 0117-B4
Date 3/10/83 of Document:
REGULATORY DOCKET FILE

G2P3S SCHEMTMSIV LEAKAGE CNTSYS W

24X DANNY MRG 1 D

This drawing and the design it covers are the property of BECHTEL. They are merely loaned and on the borrower's express agreement that they will not be reproduced, copied, loaned, exhibited, nor used except in the limited way and private use permitted by any written consent given by the lender to the borrower.

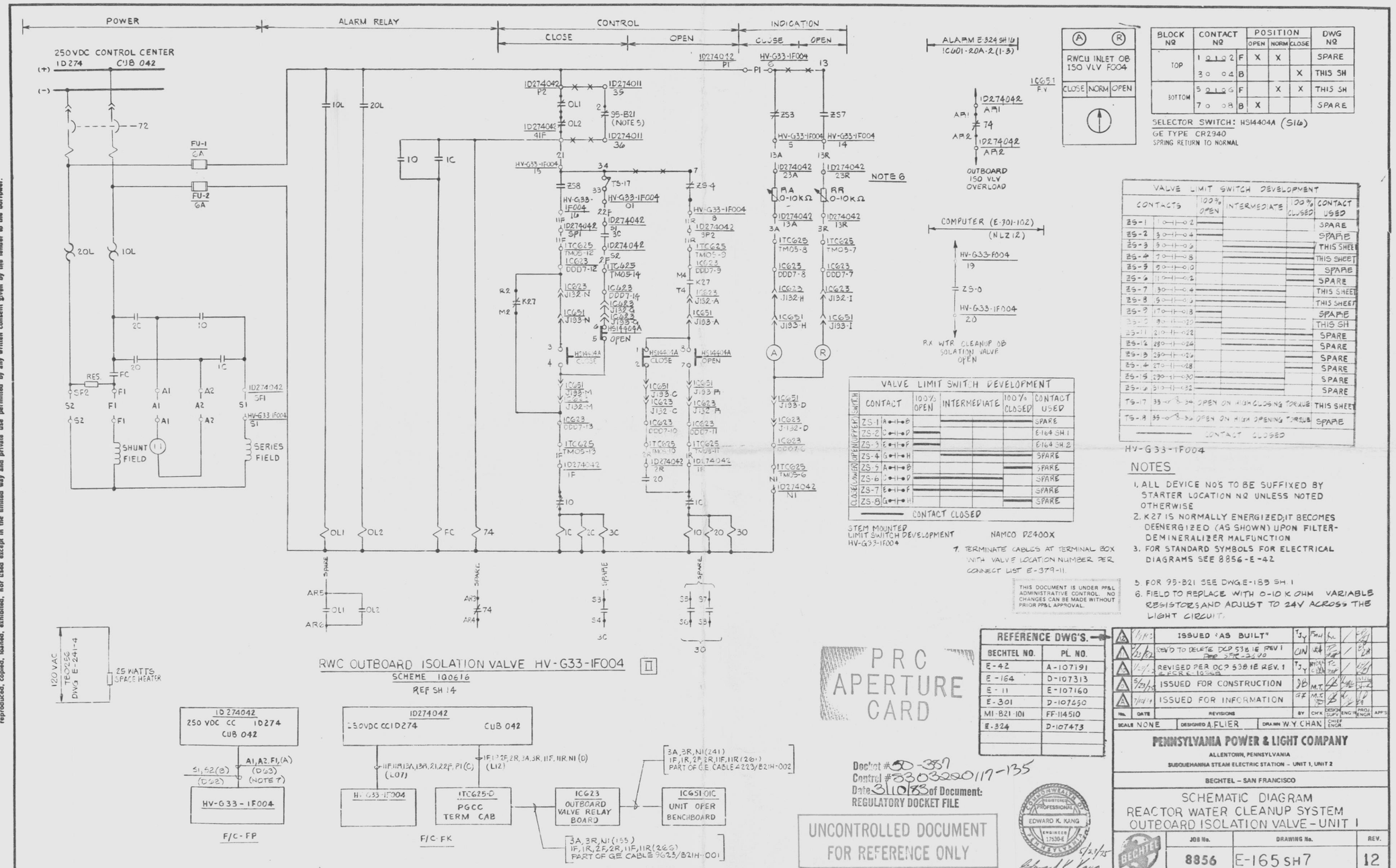
POWER
ALARM RELAY
CONTROL
CLOSE
OPEN
INDICATION
CLOSE
OPEN
250VDC CONTROL CENTER
1D274 CUB 042
(+)
(-)
72
FU-1 2A
FU-2 6A
20L
10L
2C
1C
2O
1O
RES
FC
SF2
FI
AI
A2
S2
S1
1D274042 5FI
HV-G33 1F004 S1
SHUNT FIELD
SERIES FIELD
1D274042 P2
OL1
OL2
95-B21 (NOTE 5)
1D274011 35
1D274042 41F
1D274011 36
21
HV-G33-1F004 15
ZS8
TS-17
HV-G33-1F004 01
HV-G33-1F004 16
1D274042 5P1
1D274042 3C
1D274042 5Z
ITCG625 TM05-14
ICG23 DDD7-14
ICG23 J132-G
ICG23 J132-B
HS14404A OPEN
HS14404A CLOSE
ICG51 J133-M
ICG23 J132-M
ICG23 DDD7-13
ITCG625 TM05-13
1D274042 1F
10
1C
2C
3C
FC
74
R2
K27
M2
ZS-4
HV-G33-1F004 9
1D274042 3P2
ITCG625 TM05-9
ICG23 DDD7-9
M4
K27
T4
ICG23 J132-A
ICG51 J133-A
HS14404A CLOSE
HS14404A OPEN
ICG51 J133-C
ICG23 J132-C
ICG23 DDD7-10
ITCG625 TM05-10
1D274042 2R
20
ICG51 J133-A
ICG23 J132-A
ICG23 DDD7-11
ITCG625 TM05-11
1D274042 1R
1C
10
20
30
HV-G33-1F004 5
HV-G33-1F004 14
ZS3
ZS7
13A
13R
1D274042 23A
1D274042 23R
NOTE 6
RA 0-10KΩ
RR 0-10KΩ
1D274042 13A
1D274042 13R
ITCG625 TM05-8
ITCG625 TM05-7
ICG23 DDD7-8
ICG23 DDD7-7
ICG23 J132-H
ICG23 J132-I
ICG51 J133-H
ICG51 J133-I
A
R
ICG51 J133-D
ICG23 J132-D
ICG23 DDD7-C
ITCG625 TM05-G
1D274042 N1
ALARM E-324 SH 10
1C001-20A-2 (1-3)
1D274042 AR1
AR1
74
AR2
1D274042 AR2
OUTBOARD ISO VLV OVERLOAD
ICG51 F.V.
A R
RWCU INLET OB ISO VLV F004
CLOSE NORM OPEN
COMPUTER (E-701-102) (NLZ12)
HV-G33-F004 19
ZS-0
HV-G33-1F004 20
RX WTR CLEANUP OB ISOLATION VALVE OPEN
SPARE
SPARE
SPARE

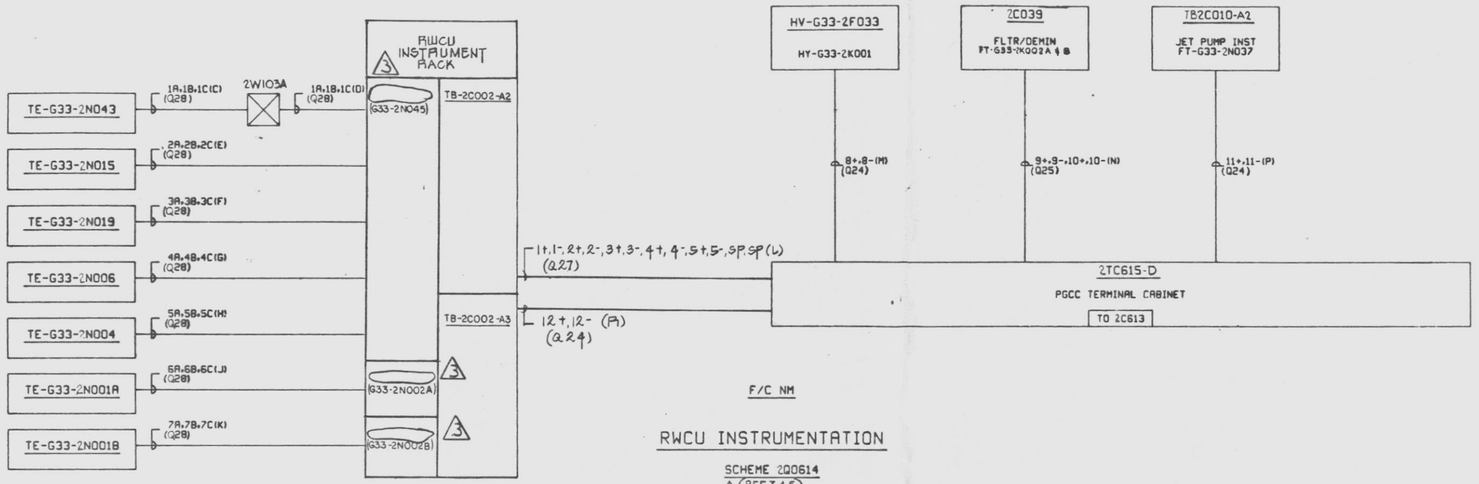

RWCU INSTRUMENTATION

SCHEME 2Q0614 (REF. 3,4,5)

NOTES

1. FOR STANDARD SYMBOLS FOR ELECTRICAL DIAGRAMS SEE 8856-E-42.
2. ENERGIZING OF SV24433 PERMITS CONTROL OF HV-G33-2F033 BY HIC-G33-2R606.
3. FOR 120V AC POWER SUPPLY SEE E-64 SH 27

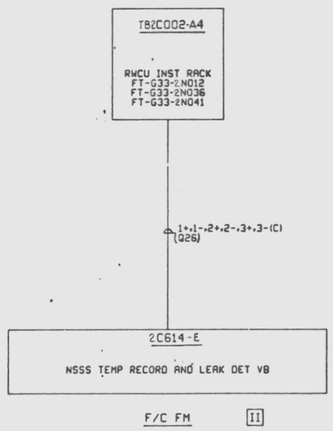

RWCU LEAK DETECTION

SCHEME 2Q0623 (REF. 4)

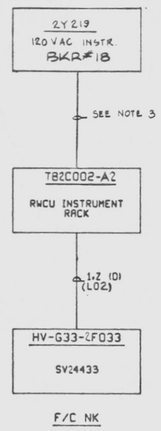

RWCU FILTER DEMIN DUMP VALVE & INSTRUMENTATION

SCHEME 2Q0618 (REF. 2,3)

PRC APERTURE CARD

UNCONTROLLED DOCUMENT FOR REFERENCE ONLY

REFERENCE DWG'S.	
BECHTEL NO.	PL. NO.
E-42	A-107191
M1-G33-140	FF-133010
E-64	D-107213

No.	DATE	REVISIONS	BY	CH'K	DESIGN SUPV	ENG'R	PROJ ENGR	APP'S
3	12/20/81	REVISED BLOCK DIAGR. FOR TB-2C002 ADDED REF. NUMBER (DCR-9)	P.G.					
2	5/12/81	ADDED REF INFO. (DCR-9)						
1	2/14/78	ADDED CABLE A AND REV. AS SHOWN	MPS					
0	7/21/77	ISSUED FOR CONSTRUCTION	M.Y.					

SCALE NONE | DESIGNED A. SANCHEZ | DRAWN M.H. YOUNG | CHIEF ENGR

PENNSYLVANIA POWER & LIGHT COMPANY

ALLENTOWN, PENNSYLVANIA

SUSQUEHANNA STEAM ELECTRIC STATION - UNIT 1, UNIT 2

BECHTEL - SAN FRANCISCO

BLOCK DIAGRAM
REACTOR WATER CLEANUP SYSTEM
INSTRUMENT CKT UNIT 2

JOB No.	DRAWING No.	REV.
8856	E-165 SH 14	3

D-107314 SH 14

Docket #50-387
Control #8303220117-136
Date 3/10/83 of Document:
REGULATORY DOCKET FILE

G2T97 SCHEM RWC INSTRUMENT CKT W

This drawing and the design it covers are the property of BECHTEL. They are merely loaned and on the borrower's express agreement that they will not be reproduced, copied, loaned, exhibited, nor used except in the limited way and private use permitted by any written consent given by the lender to the borrower.

24X

I certify that the microfilmed image contained on this microform were made in the normal and regular course of business. This is a true, full, correct and complete reproduction and replacement for and/or in lieu of original documents generated by the Bechtel group of companies.

Signed: Camera Operator Date 1-6-82 Camera Type MRG I

D

This drawing and the design it covers are the property of BECHTEL. They are merely loaned and on the borrower's express agreement that they will not be reproduced, copied, loaned, exhibited, nor used except in the limited way and private use permitted by any written consent given by the lender to the borrower.

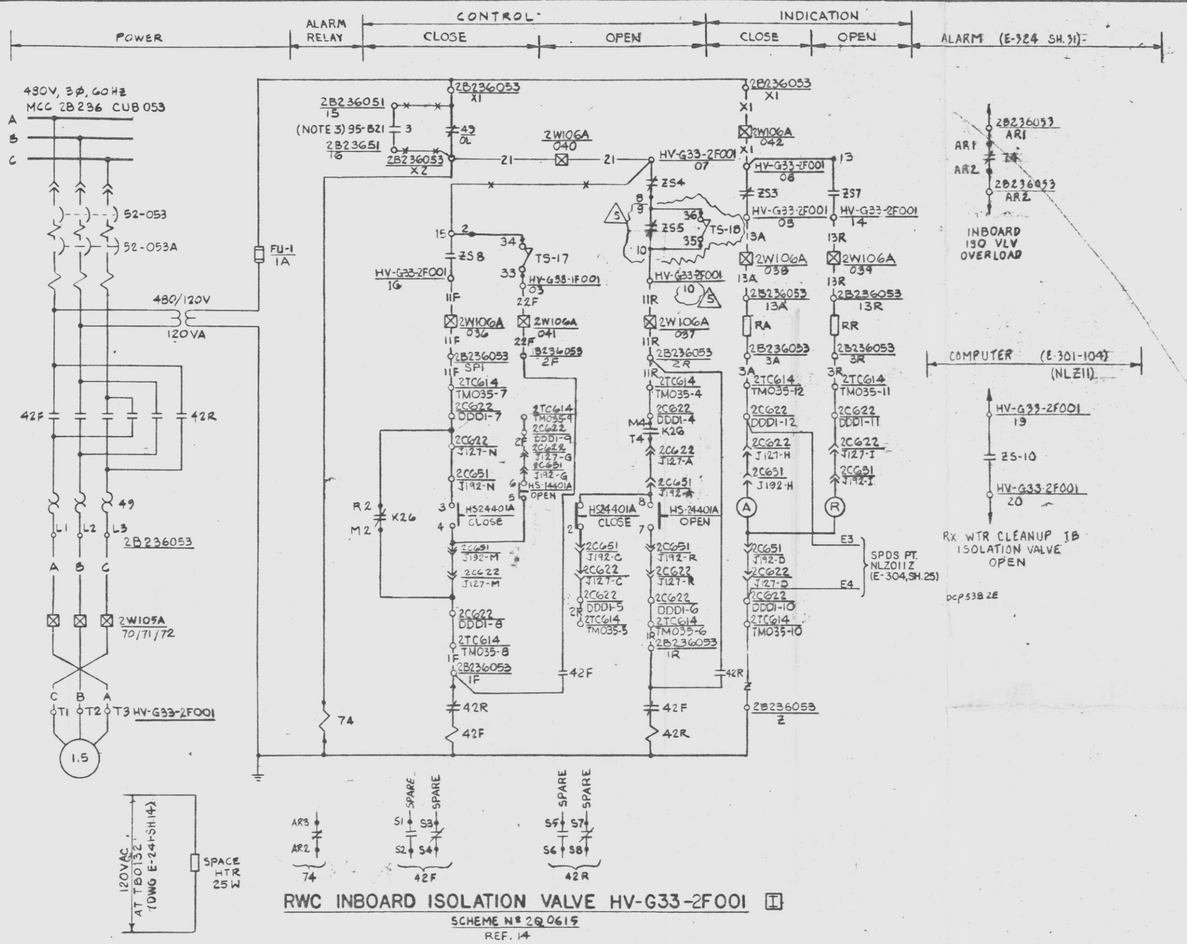

RWC INBOARD ISOLATION VALVE HV-G33-2F001 [1]

SCHEME Nº 2Q 0615
REF. 14

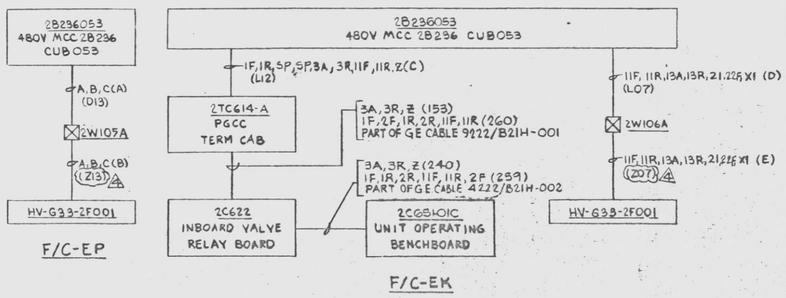

VALVE LIMIT SWITCH DEVELOPMENT

SWITCH	CONTACT		100% OPEN	INTERMEDIATE	100% CLOSED	CONTACT USED
CLOSE (LOWER) OPEN (UPPER)	ZS-1	A-1-B				SPARE
	ZS-2	C-1-D				E-164 SH.3
	ZS-3	E-1-F				E-164 SH.4
	ZS-4	G-1-H				SPARE
	ZS-5	A-1-B				SPARE
	ZS-6	C-1-D				SPARE
	ZS-7	E-1-F				SPARE
	ZS-8	G-1-H				SPARE

CONTACT CLOSED

STEM MOUNTED LIMIT SWITCH DEVELOPMENT HV-G33-2F001

NAMCO D2400X

SWITCH DEVELOPMENT

BLOCK No.	CONTACT No.		POSITION OPEN	POSITION NORMAL	POSITION CLOSE	DRAWING No.
TOP	1 2	F	X	X		THIS SH
	3 4	D			X	THIS SH
BTM	5 6	F		X	X	THIS SH
	7 8	D	X			THIS SH.

SELECTOR SWITCH: HS24401A
GENERAL ELECTRIC TYPE CR2940
KEY LOCK, KEY REMOVABLE IN NORMAL POSITION, SPRING RETURN TO NORMAL

2G651 FV

A	R
RWCU INLET IB ISO VLV F001	
CLOSE	NORMAL OPEN

VALVE LIMIT SWITCH DEVELOPMENT

CONTACTS	100% OPEN	INTERMEDIATE	100% CLOSED	CONTACT USED
1-2				SPARE
3-4				SPARE
5-6				THIS SH
7-8				THIS SH
9-10				THIS SH [TS]
11-12				SPARE
13-14				THIS SH
15-16				THIS SH
17-18				SPARE
19-20				THIS SH.
21-22				SPARE
23-24				SPARE
25-26				SPARE
27-28				SPARE
29-30				SPARE
31-32				SPARE
TS-17 95-34	OPEN ON HIGH CLOSING TORQUE			THIS SH
TS-18 95-96	OPEN ON HIGH OPENING TORQUE			THIS SH [TS]

CONTACT CLOSED

HV-G33-2F001

NOTES:

1. ALL DEVICE Nºs TO BE SUFFIXED BY STARTER LOCATION Nº UNLESS NOTED OTHERWISE.
2. FOR STANDARD SYMBOLS FOR ELECTRICAL DIAGRAMS SEE DWG E-42.
3. FOR CONTACT 95-B21 SEE DWG E-165 SH.16

PRC APERTURE CARD

UNCONTROLLED DOCUMENT FOR REFERENCE ONLY

REFERENCE DWG'S.	
BECHTEL NO.	PL NO.
E-42	A-107191
E-164	D-107313
E-185	D-107334
MI-B21-101	DF114510
E-301	D-107450
E-324	D-107473

No.	DATE	REVISIONS	BY	CHKD	DESIGN SUPV.	ENGR	PROJ ENGR	MGR.
4	4/21/83	REVISED PER DCP 538.2E REV.1	NG					
3	1/6/83	REVISED PER DCP-41.13 & INCRP FCR E5734	RBL					
2	12/8/82	REV ANNUNCIATOR ENGRAVING SER 1477. ADDED STEM MTD POSITION SW (DCR 7)	R.K.					
1	9/1/82	ADDED LIMIT SWITCH CONTACTS (DCR 9), INC FCN-E-3363	RB					
0	7/1/77	ISSUED FOR CONSTRUCTION	M.Y.					

SCALE NONE | DESIGNED A. SANCHEZ | DRAWN M.H. YOUNG | ENGR

PENNSYLVANIA POWER & LIGHT COMPANY
ALLENTOWN, PENNSYLVANIA
SUSQUEHANNA STEAM ELECTRIC STATION - UNIT 1, UNIT 2

BECHTEL - SAN FRANCISCO

SCHEMATIC DIAGRAM
REACTOR WATER CLEANUP SYSTEM
INBOARD ISOL VALVE - UNIT 2

JOB No.	DRAWING No.	REV.
8856	E-165 SH 15	5

D-107314 SH 15

Docket # 50-387
Control # 8308220117-137
Date 3/10/83 of Document:
REGULATORY DOCKET FILE

G2T99 SCHEM RWC INBOARD ISO VLVS [M]

22 x 34 "D" SIZE

124X

I certify that the microfilmed image contained on this microform were made in the normal and regular course of business. This is a true, full, correct and complete reproduction and replacement for and/or in lieu of original documents generated by the Bechtel ... companies.
Signed: JACINTO Date: 8-26-82 Camera Type: MRD I
Camera Operator

D

This drawing and the design it covers are the property of BECHTEL. They are merely loaned and on the borrower's express agreement that they will not be reproduced, copied, lapsed, exhibited, nor used except in the limited way and private use permitted by any written consent given by the lender to the borrower.

POWER | ALARM RELAY | CONTROL (CLOSE / OPEN) | INDICATION (CLOSE / OPEN) | ALARM (E-324 SH 33)

250 VDC CONTROL CENTER 2D274 CUB 042 (+) (−)

72 · FU-1 6A · FU-2 6A · 20L · 10L · 10 · 1C · 2C · 10 · 1 · 20 · 1C · RES. · FC · SF2 · F1 · A1 · A2 · S1 · 2D274042 SF1 · S2 · F1 · A1 · A2 · HV-G33-2F004 S1 · SHUNT FIELD (1.1) · SERIES FIELD

2D274042 P2 · OL1 · OL2 · 2D274011 (38) · 95-B21 (NOTE 3) · 2D274042 41F · 2D274011 (36) · 21 · 10L · 20L · 10 · 1C · 15 · Z58 · 34 · TS-17 · 33 · HVG33F004 10 · 11F · 2D274042 SM1 · 2TCG25 TM08-12 · 2CG23 DDD7-12 · 2TCG25 TM05-14 · 2CG23 DDD7-14 · 2CG23 J132-G · 2CG51 J193-G · 2CG23 J132-N · 2CG51 J193-N · K27 · 11 · 12 · 30 · 40 · HS24404A CLOSE · HS24404A OPEN · 5 · 6 · 2CG51 J193-M · 2CG23 J132-M · 2CG23 DDD7-13 · 2TCG25 TM05-13 · 1F · 2D274042 1F · 2C · 10 · OL1 · OL2 · FC · 74 · 1C · 2C · 3C

HV-G33-2F004 07 · ZS-4 · 8 · 36 · 18 · ZS-5 · 9 · 35 · HV-G33-2F004 10 · 11R · 2D274042 2R · 2TCG25 TM08-9 · 2CG23 DDD7-9 · 4 · K27 · 3 · 2CG23 J132-A · 2CG51 J193-A · HS24404A CLOSE · HS24404A OPEN · 7 · 8 · 2CG51 J193-C · 2CG23 J132-C · 2CG23 DDD7-10 · 2TCG25 TM05-10 · 2CG23 DDD7-11 · 2TCG25 TM05-11 · 1R · 2D274042 1R · 2C · 20 · 10 · 1C · 20 · 30

HV-G33-2F004 08 · 13 · P1 · 2D274042 A1 · 74 · 2D274042 A2 · OUTBOARD ISO VLV OVERLOAD · Z53 · Z57 · HV-G33-2F004 05 · HV-G33-2F004 14 · 13A · 13R · 2D274042 23A · 2D274042 23R · RA 0-10 KΩ · RR (NOTE 4) 0-10 KΩ · 2D274042 15A · 2D274042 15R · 3A · 3R · 2TCG25 TM05-8 · 2TCG25 TM05-7 · 2CG23 DDD7-8 · 2CG23 DDD7-7 · 2CG23 J132-H · 2CG23 J132-I · 2CG51 J193-H · 2CG51 J193-I · A · R · 2CG51 J193-D · D3 · 3C G23 J132-D · D4 · SPDS PT. NLZ012Z (E-304, SH.25) · RX WTR CLEANUP OB ISOLATION VALVE OPEN · 2CG23 DDD7-6 · 2TCG25 TM05-6 · N1 · 2D274042 N1

COMPUTER (E-301-104) (NLZ12) · HV-G33-2F004 19 · ZS-10 · HV-G33-2F004 20

SPARE · AR5 · OL1 · OL2 · AR6 · SPARE · AR3 · 74 · AR4 · SPARE · S1 · S8 · S2 · S4 · 3C · SPARE · S5 · S7 · S6 · S8 · 30

120 VAC @ TB-0128 (DWG. E-241-13) · SPACE HEATER 25 W

RWC OUTBOARD ISOLATION VALVE HV-G33-2F004 [II]
SCHEME 200616
REF. 14

2D 274042 250 VDC CC 2D274 CUB 042 · A1, A2, F1 (A) (D23) (SEE NOTE 5) · S1, S2 (D22) · HV-G33-2F004 · F/C-FP

2D274042 250 VDC CC 2D274 CUB 042 · 11F, 11R, 13A, 13R, 21, 22F, F1(C) (L07) · 1F, 1R, 5F, 5R, 3A, 3R, 11F, 11R, N1 (D) (L12) · HV-G33-2F004 · F/C-FK

2TCG25-D PGCC TERM CAB · 2CG23 OUTBOARD VALVE RELAY BOARD · 2CG51-01C UNIT OPEN BENCHBOARD

3A, 3R, N1 (241) · 1F, 1R, 2F, 2R, 11F, 11R (261) · PART OF G.E. CABLE 4225/B21H-002

3A, 3R, 11 (155) · 1F, 1R, 2F, 2R, 11F, 11R (262) · PART OF GE CABLE 3625/B21H-001

2CG51 F.V. · R/WCU INLET OB ISO VLV F004 · CLOSE | NORM | OPEN

BLOCK NO	CONTACT NO		POSITION OPEN	POSITION NORM	POSITION CLOSE	DWG NO
TOP	1 2 10 2	F	X	X		THIS SH
	3 0 0 4	B			X	THIS SH
BOTTOM	5 2 10 6	F		X	X	THIS SH
	7 0 0 8	B	X			THIS SH

SELECTOR SWITCH: HS24404A
GE TYPE CR2940
KEYLOCK, KEY REMOVABLE IN NORM POSITION
SPRING RETURN TO NORMAL

VALVE LIMIT SWITCH DEVELOPMENT

CONTACTS		100% OPEN	INTERMEDIATE	100% CLOSED	CONTACT USED
ZS-1	1 0 — 0 2				SPARE
ZS-2	3 0 — 0 4				SPARE
ZS-3	5 0 — 0 6				THIS SHEET
ZS-4	7 0 — 0 8				THIS SHEET
ZS-5	9 0 — 0 10				SPARE
ZS-6	11 0 — 0 12				SPARE
ZS-7	13 0 — 0 14				THIS SHEET
ZS-8	15 0 — 0 16				THIS SHEET
ZS-9	17 0 — 0 18				SPARE
ZS-10	19 0 — 0 20				THIS SHEET
ZS-11	21 0 — 0 22				SPARE
ZS-12	23 0 — 0 24				SPARE
ZS-13	25 0 — 0 26				SPARE
ZS-14	27 0 — 0 28				SPARE
ZS-15	29 0 — 0 30				SPARE
ZS-16	31 0 — 0 32				SPARE
TS-17	33 — 34	OPEN ON HIGH CLOSING TORQUE			THIS SHEET
TS-18	35 — 36	OPEN ON HIGH OPENING TORQUE			SPARE

CONTACT CLOSED

HV-G33-2F004

VALVE LIMIT SWITCH DEVELOPMENT

SWITCH	CONTACT	100% OPEN	INTERMEDIATE	100% CLOSED	CONTACT USED
TORQUE SWITCH	ZS-1 A—B				SPARE
	ZS-2 C—D				E-164 SH-3
	ZS-3 E—F				E-164 SH-4
	ZS-4 G—H				SPARE
CLOSE LIMIT SWITCH	ZS-5 A—B				SPARE
	ZS-6 C—D				SPARE
	ZS-7 E—F				SPARE
	ZS-8 G—H				SPARE

CONTACT CLOSED

STEM MOUNTED
LIMIT SWITCH DEVELOPMENT HV-G33-2F004 · NAMCO D2400X

NOTES:

1. ALL DEVICE NOS TO BE SUFFIXED BY STARTER LOCATION NO UNLESS NOTED OTHERWISE
2. FOR STANDARD SYMBOLS FOR ELECTRICAL DIAGRAMS SEE 8856-E-42
3. FOR 95-B21 SEE DWG. E-185 SH. 13
4. FIELD TO REPLACE W/ 0-10 K OHM VARIABLE RESISTORS AND ADJUST TO 24V ACROSS THE LIGHT CIRCUIT.
5. TERMINATE CABLES AT UNDESIGNATED TERMINAL BOX WITH VLV NO. LOCATED NEAR THE VLV PER CONNECT LIST, E 390-11.

REFERENCE DWG'S.	
BECHTEL NO.	PL. NO.
E-42	A-107191
E-164	D-107313
E-11	E-107160
E-241	E-107390
MI-B21-101	FF-114510
E-301	D-107450
E-324	D-107473

PRC APERTURE CARD

Docket #50-387
Control #8303220117
Date 3/10/83 of Document:
REGULATORY DOCKET FILE

UNCONTROLLED DOCUMENT FOR REFERENCE ONLY

NO.	DATE	REVISIONS	BY	CHK'D	DESIGN SUP'R	ENGR	PROJ ENGR	APP'D
5	5/4/82	REVISED PER DCP 838 2E REV 1 REV VLV LIMIT & TORQUE SW (DCR 9)	NG	TN				
4	11/30/81	REV TO INCORP FCR E-7770	UC					
3	7/14/81	ADDED NOTE 5 (DCR 42)	PC					
2	7/24/80	REV PER DCP 2000Z.1	NG	TN				
1	7/31/79	ISSUED FOR CONSTRUCTION	M.Y.					

SCALE NONE · DESIGNED A. SANCHEZ · DRAWN M. H. YOUNG · CHIEF ENGR.

PENNSYLVANIA POWER & LIGHT COMPANY
ALLENTOWN, PENNSYLVANIA
SUSQUEHANNA STEAM ELECTRIC STATION – UNIT 1, UNIT 2

BECHTEL – SAN FRANCISCO

SCHEMATIC DIAGRAM
REACTOR WATER CLEANUP SYSTEM
OUTBOARD ISOLATION VALVE – UNIT 2

JOB No.	DRAWING No.	REV.
8856	E-165 SH 16	7

D-107314 SH 16

G2T95 SCHEM RWCU OUTBOARD ISO VLV M

24X

P.C. AKINS 12-2-82 MRG 1

D

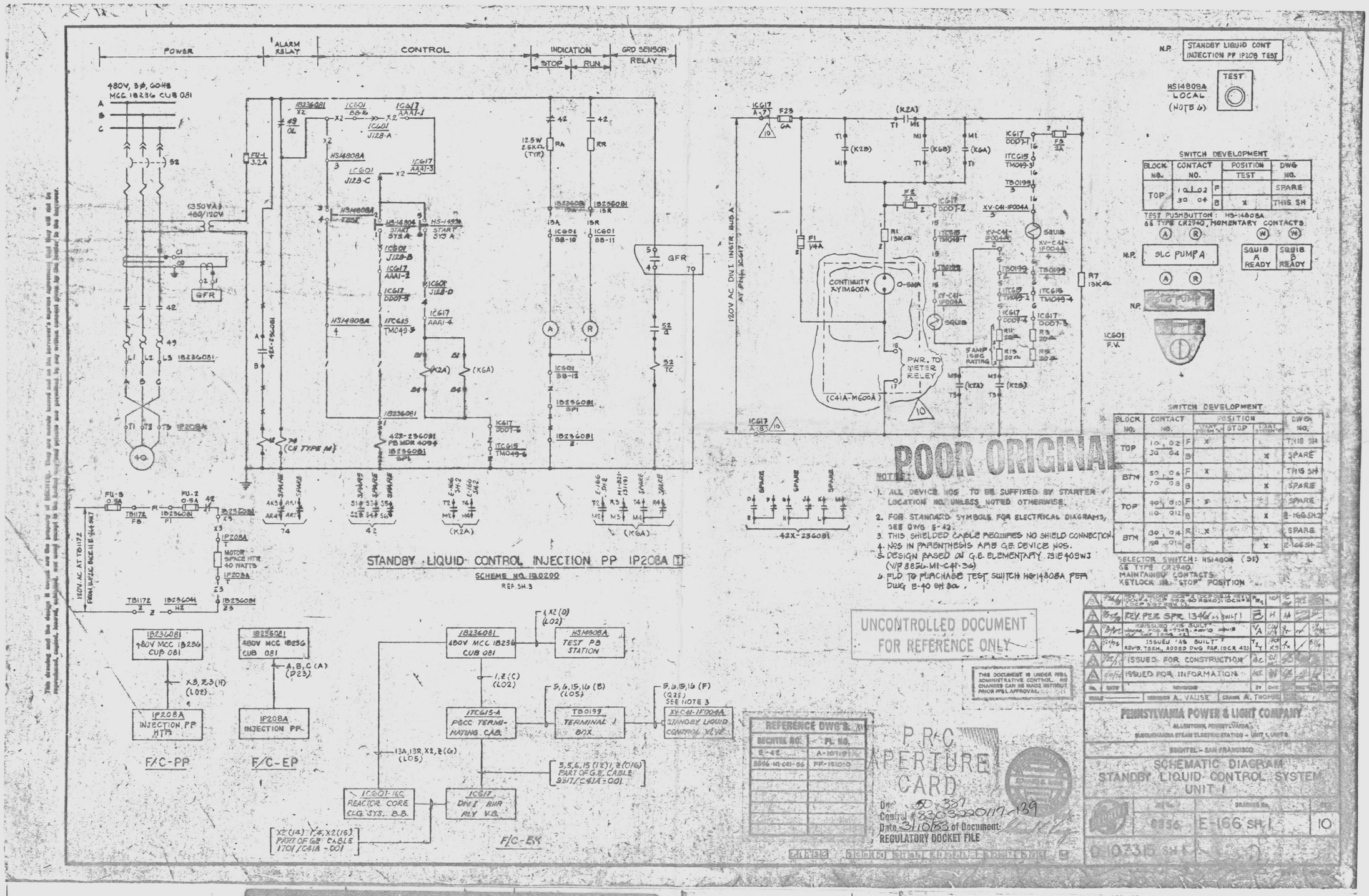

This drawing and the design it covers are the property of BECHTEL. They are merely loaned and on the borrower's express agreement, that they will not be reproduced, copied, loaned, exhibited, nor used except in the limited way and purpose for which they are specifically furnished without the permission in writing of BECHTEL. Any such use or reproduction shall be at the borrower's sole risk and without liability to BECHTEL.

I certify that the microfilmed image contained on this microform were made in the normal and regular course of business. This is a true, full, correct and complete reproduction and replacement for and/or in lieu of original documents generated by the Bechtel group of companies.
Signed: RHEY Camera Operator
Camera Type: MRG-1

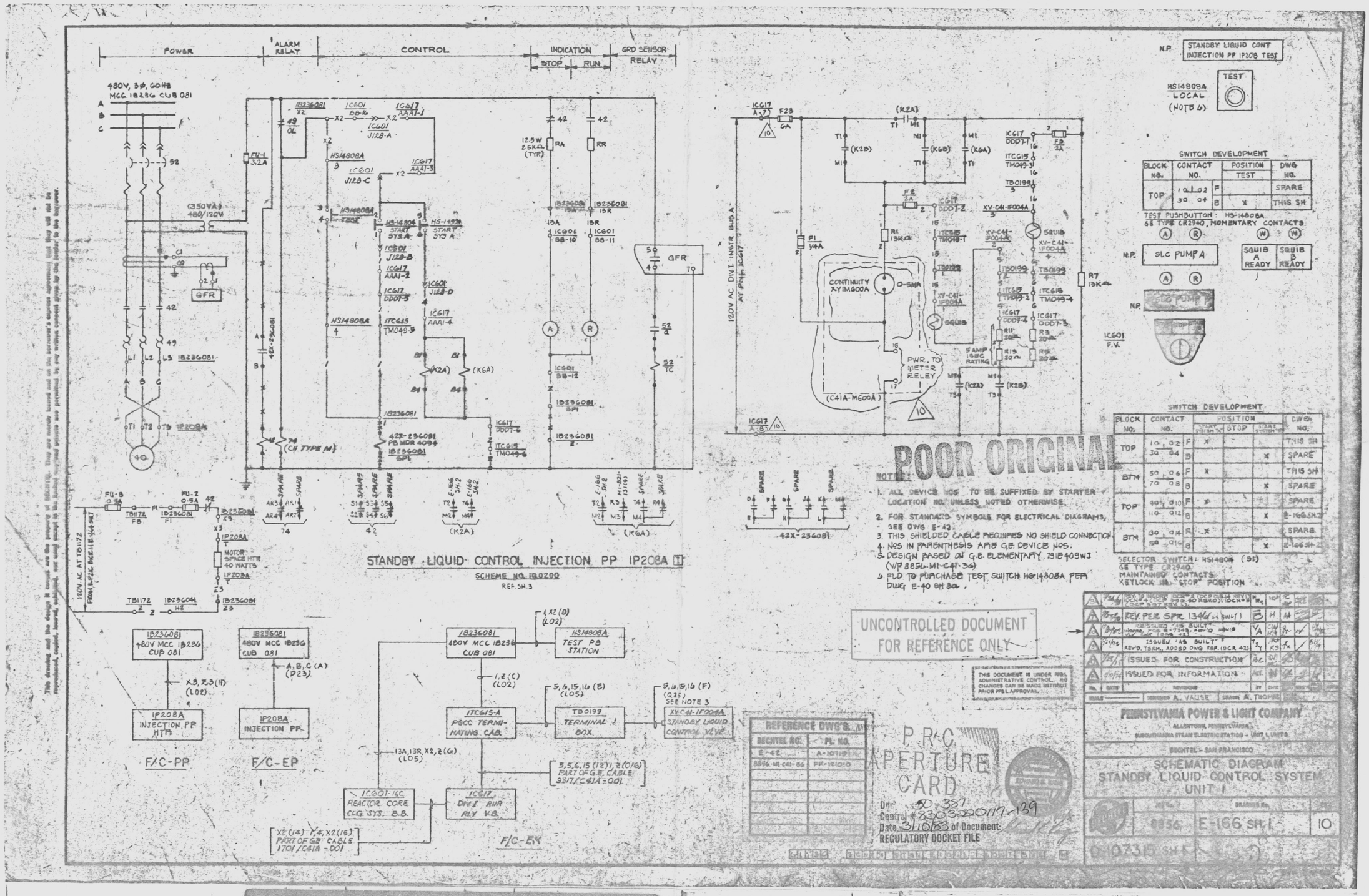

This drawing and the design it covers are the property of BECHTEL. They are merely loaned and on the borrower's express agreement, that they will not be reproduced, copied, loaned, exhibited, nor used except in the limited way and purpose for which they are specifically furnished without the permission in writing of BECHTEL. Any such use or reproduction shall be at the borrower's sole risk and without liability to BECHTEL.

I certify that the microfilmed image contained on this microform were made in the normal and regular course of business. This is a true, full, correct and complete reproduction and replacement for and/or in lieu of original documents generated by the Bechtel group of companies.
Signed: RHEY Camera Operator
Camera Type: MRG-1

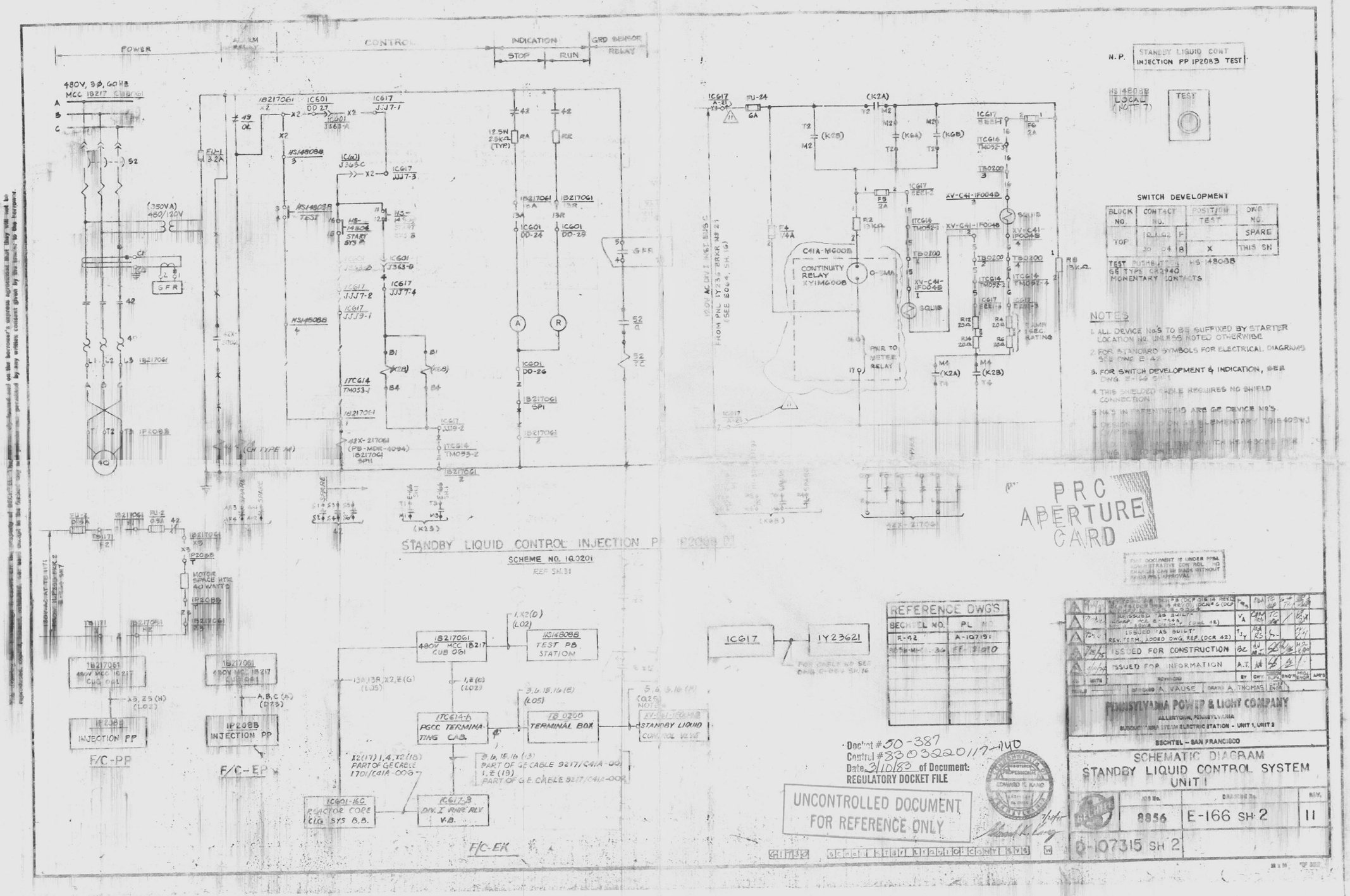
POWER
CONTROL
INDICATION
STOP
RUN
GRD SENSOR RELAY
480V, 3Ø, 60HZ
MCC 1B217 CUB061
STANDBY LIQUID CONTROL INJECTION PP 1P208B
SCHEME NO. 1Q0201
REF SH.31
CONTINUITY RELAY XY1M600B
PWR TO METER RELAY
MOTOR SPACE HTR 40 WATTS
INJECTION PP
F/C-PP
F/C-EP
F/C-EK
TEST PB STATION
PGCC TERMINATING CAB.
TERMINAL BOX
STANDBY LIQUID CONTROL VLVE
REACTOR CORE CLG SYS B.B.
DIV. I RHR RLY V.B.
N.P.
STANDBY LIQUID CONT INJECTION PP 1P208B TEST
HS148088 LOCAL (NOTE 7)
TEST
SWITCH DEVELOPMENT
BLOCK NO.
CONTACT NO.
POSITION TEST
DWG NO.
TOP
SPARE
THIS SN
TEST PUSHBUTTON HS-148088
GE TYPE CR2940
MOMENTARY CONTACTS
NOTES
1. ALL DEVICE NO'S TO BE SUFFIXED BY STARTER LOCATION NO. UNLESS NOTED OTHERWISE
2. FOR STANDARD SYMBOLS FOR ELECTRICAL DIAGRAMS SEE DWG E-42
3. FOR SWITCH DEVELOPMENT & INDICATION, SEE DWG E-166 SH 1
4. THIS SHIELDED CABLE REQUIRES NO SHIELD CONNECTION
5. NO'S IN PARENTHESIS ARE GE DEVICE NO'S.
PRC APERTURE CARD
REFERENCE DWG'S
BECHTEL NO.
PL NO.
E-42
A-107191
ISSUED FOR CONSTRUCTION
ISSUED FOR INFORMATION
REVISIONS
DESIGNED A. VAUSE
DRAWN A. THOMAS
PENNSYLVANIA POWER & LIGHT COMPANY
ALLENTOWN, PENNSYLVANIA
SUSQUEHANNA STEAM ELECTRIC STATION - UNIT 1, UNIT 2
BECHTEL - SAN FRANCISCO
SCHEMATIC DIAGRAM
STANDBY LIQUID CONTROL SYSTEM
UNIT 1
JOB No. 8856
DRAWING No. E-166 SH 2
REV. 11
D-107315 SH 2
Docket # 50-387
Control # 8303220117-140
Date 3/10/83 of Document:
REGULATORY DOCKET FILE
UNCONTROLLED DOCUMENT FOR REFERENCE ONLY
24X
DANNY
MRG 1
D

This drawing and the design it covers are the property of BECHTEL. They are merely loaned and on the borrower's express agreement that they will not be reproduced, copied, loaned, exhibited, nor used except in the manner and private use permitted by and for the benefit of BECHTEL, nor shall their contents be communicated by any written consent given by the lender to the borrower.

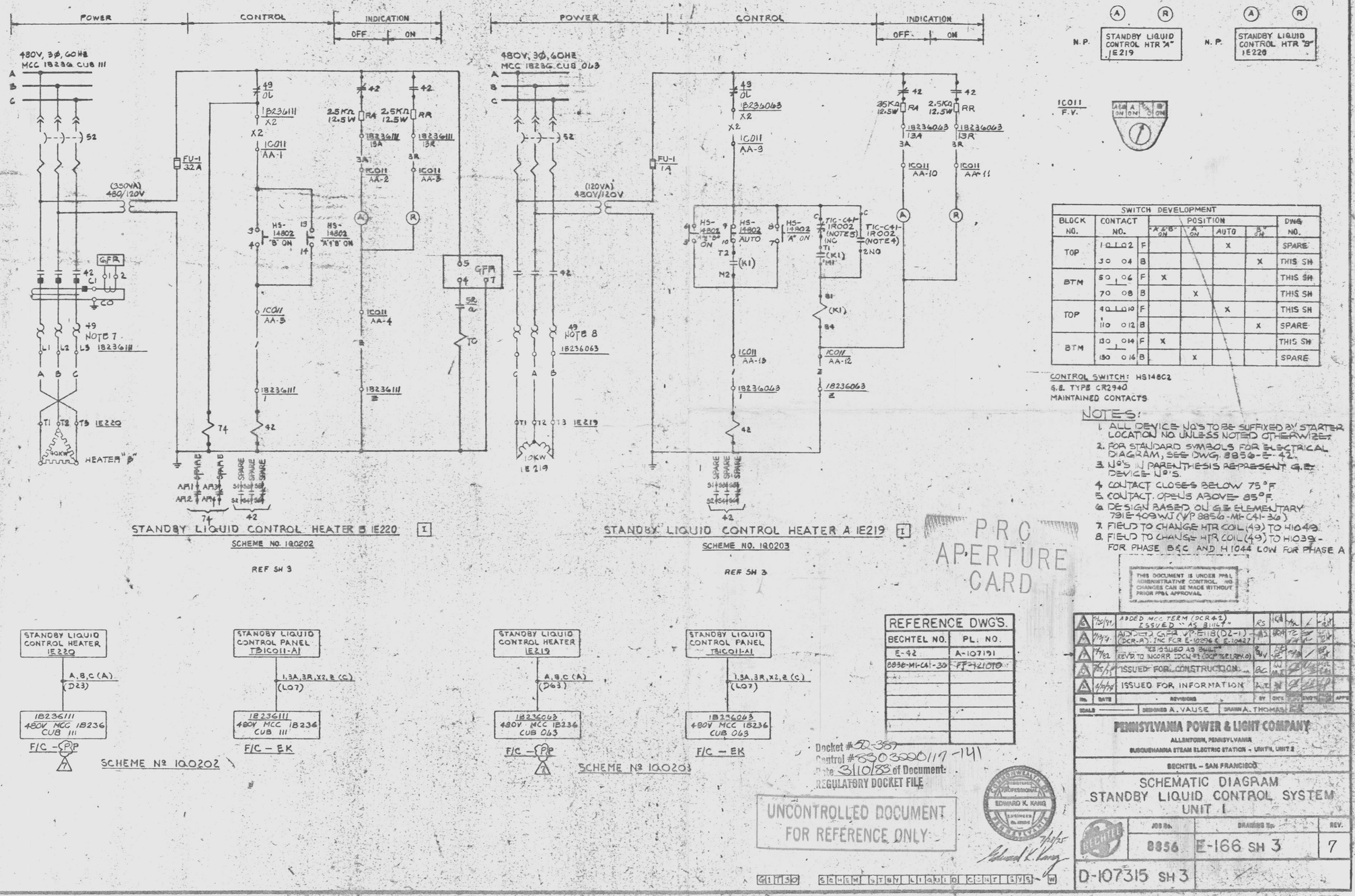

N.P. STANDBY LIQUID CONTROL HTR "A" 1E219

N.P. STANDBY LIQUID CONTROL HTR "B" 1E220

1C011 F.V.

SWITCH DEVELOPMENT							
BLOCK NO.	CONTACT NO.		POSITION "A&B" ON	"A" ON	AUTO	"B" ON	DWG NO.
TOP	1Q1Q2	F			X		SPARE
	3Q 04	B				X	THIS SH
BTM	5Q 06	F	X				THIS SH
	7Q 08	B		X			THIS SH
TOP	9Q1Q10	F			X		THIS SH
	11Q 012	B				X	SPARE
BTM	13Q 014	F	X				THIS SH
	15Q 016	B		X			SPARE

CONTROL SWITCH: HS148C2
G.E. TYPE CR2940
MAINTAINED CONTACTS

NOTES:
1. ALL DEVICE NO'S TO BE SUFFIXED BY STARTER LOCATION NO UNLESS NOTED OTHERWISE.
2. FOR STANDARD SYMBOLS FOR ELECTRICAL DIAGRAM, SEE DWG. 8856-E-42.
3. NO'S IN PARENTHESIS REPRESENT G.E. DEVICE NO'S.
4. CONTACT CLOSES BELOW 75°F
5. CONTACT OPENS ABOVE 85°F.
6. DESIGN BASED ON G.E. ELEMENTARY 731E409WJ (WP 8856-MI-C41-30)
7. FIELD TO CHANGE HTR COIL (49) TO H1049.
8. FIELD TO CHANGE HTR COIL (49) TO H1039 - FOR PHASE B&C AND H1044 LOW FOR PHASE A

THIS DOCUMENT IS UNDER PP&L ADMINISTRATIVE CONTROL. NO CHANGES CAN BE MADE WITHOUT PRIOR PP&L APPROVAL.

STANDBY LIQUID CONTROL HEATER 1E220 → A,B,C (A) (D23) → 1B236111 480V MCC 1B236 CUB III → F/C – P

STANDBY LIQUID CONTROL PANEL TBICO11-A1 → 1,3A,3R,X2,2 (C) (L07) → 1B236111 480V MCC 1B236 CUB III → F/C – EK

SCHEME Nº 1B0202

STANDBY LIQUID CONTROL HEATER 1E219 → A,B,C (A) (D63) → 1B236063 480V MCC 1B236 CUB 063 → F/C – P

STANDBY LIQUID CONTROL PANEL TBICO11-A1 → 1,3A,3R,X2,2 (C) (L07) → 1B236063 480V MCC 1B236 CUB 063 → F/C – EK

SCHEME Nº 1B0203

REFERENCE DWG'S.	
BECHTEL NO.	PL. NO.
E-42	A-107191
8856-MI-C41-30	FF-721070

PRC APERTURE CARD

Docket #50-387
Control #8303290117-141
Date 3/10/83 of Document:
REGULATORY DOCKET FILE

UNCONTROLLED DOCUMENT FOR REFERENCE ONLY

EDWARD K. KANG REGISTERED PROFESSIONAL ENGINEER No. 19004

No.	DATE	REVISIONS	BY	CHK'D	ENG'R	APP'D
A	7/30/91	ADDED MCC TERM (DCR 42) ISSUED "AS BUILT"	RS	[illegible]	MK	/
A	7/19/91	ADDED CPA VP-F118(02-1) (DCR-A). INC FOR E-10276 & E-10427	AS	[illegible]	[illegible]	[illegible]
A	7/1/82	RE-ISSUED AS BUILT" REVD TO INCORP. DCN #1 (DCP 82129-0)	BW	[illegible]	[illegible]	[illegible]
A	7/5/77	ISSUED FOR CONSTRUCTION	BC	[illegible]	[illegible]	[illegible]
A	4/8/77	ISSUED FOR INFORMATION	A.T.	[illegible]	[illegible]	[illegible]

SCALE — DESIGNED A. VAUSE — DRAWN A. THOMAS

PENNSYLVANIA POWER & LIGHT COMPANY
ALLENTOWN, PENNSYLVANIA
SUSQUEHANNA STEAM ELECTRIC STATION - UNITS 1 AND 2

BECHTEL - SAN FRANCISCO

SCHEMATIC DIAGRAM
STANDBY LIQUID CONTROL SYSTEM
UNIT 1

JOB No.	DRAWING No.	REV.
8856	E-166 SH 3	7

D-107315 SH 3

G1130 SCHEM STBY LIQUID CONT SYS W

24X

I certify that the microfilmed image contained on this microform were made in the normal and regular course of business. This is a true, full, correct and complete reproduction, and replacement for and/or in lieu of original documents owned by the Bechtel group of companies.
Camera Operator: 7AN Date: 10-4-82 Camera Type: MRG 1

D

This drawing and the design it covers are the property of BECHTEL. They are merely loaned and on the borrower's express agreement that they will not be reproduced, copied, loaned, exhibited, nor used except in the limited way and private use permitted by any written consent given by the lender to the borrower.

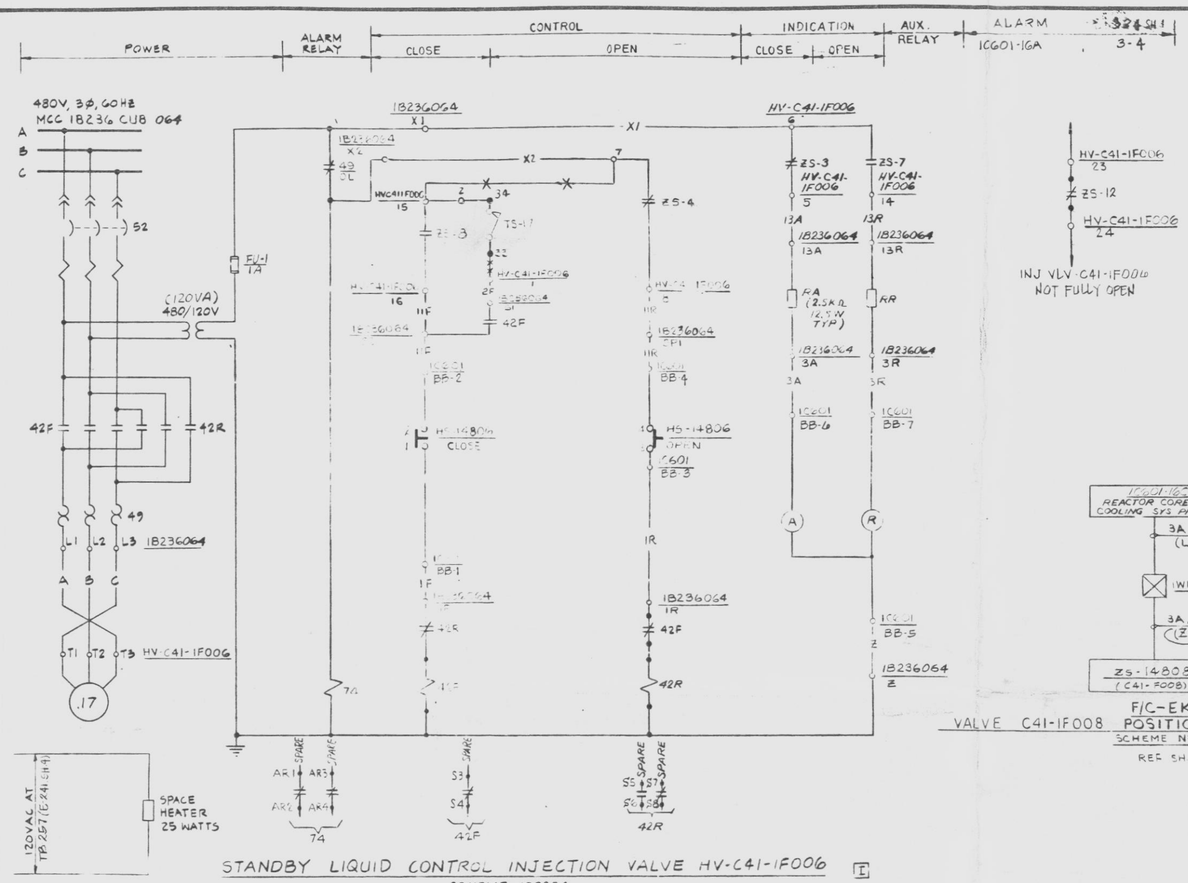

STANDBY LIQUID CONTROL INJECTION VALVE HV-C41-1F006 [I]

SCHEME 1Q0204

REF SH 2

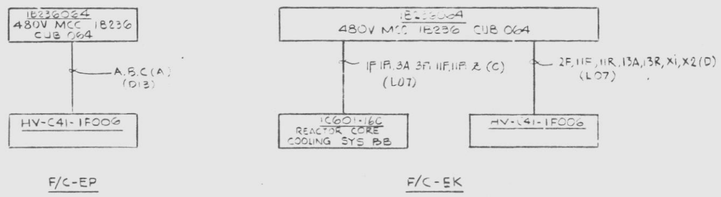

SCHEME 1Q0204

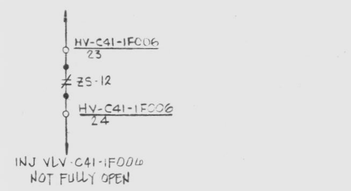

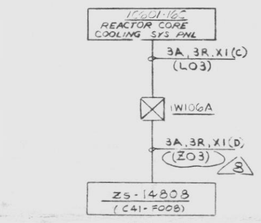

F/C-EK

VALVE C41-1F008 POSITION INDICATION [I]

SCHEME Nº 1Q0207

REF SH 2

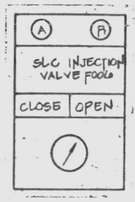

BLOCK No.	CONTACT No.		POSITION CLOSE	POSITION OPEN	DRAWING No.
TOP	1 2	F	X		THIS SH
	3 4	B		X	THIS SH
BTM	5 6	F	X		SPARE
	7 8	B		X	SPARE

CONTROL SWITCH: HS14806
GENERAL ELECTRIC TYPE CR2940
2 POSITION SWITCH MAINTAINED
CONTACTS KEY LOCKED IN OPEN

VALVE LIMIT SWITCH DEVELOPMENT

CONTACTS		100% OPEN	INTERMEDIATE	100% CLOSED	CONTACT USED
ZS-1	1-2				SPARE
ZS-2	3-4				SPARE
ZS-3	5-6				THIS SH
ZS-4	7-8				THIS SH
ZS-5	9-10				SPARE
ZS-6	11-12				SPARE
ZS-7	13-14				THIS SH
ZS-8	15-16				THIS SH
ZS-9	17-18				SPARE
ZS-10	19-20				SPARE
ZS-11	21-22				SPARE
ZS-12	23-24				THIS SH
ZS-13	25-26				SPARE
ZS-14	27-28				SPARE
ZS-15	29-30				SPARE
ZS-16	31-32				SPARE
TS-17	33-34	OPEN ON HIGH CLOSING TORQUE			THIS SH
TS-18	35-36	OPEN ON HIGH OPENING TORQUE			SPARE

CONTACT CLOSED

NOTES: HV-C41-F006

1. ALL DEVICE NO'S TO BE SUFFIXED BY STARTER LOCATION NO. UNLESS NOTED OTHERWISE.
2. FOR STANDARD SYMBOLS FOR ELECTRICAL DIAGRAMS SEE 8856-E-42.
3. DESIGN BASED ON G.E. ELEMENTARY 791E409WJ (V/P 8856-MI-C41-36).
4. NOS IN PARENTHESIS ARE GE DEVICE NOS.
5. FOR POWER SUPPLY TO PANEL 1C613 SEE DWG. E-24 SH 15

PRC APERTURE CARD

THIS DOCUMENT IS UNDER PP&L ADMINISTRATIVE CONTROL. NO CHANGES CAN BE MADE WITHOUT PRIOR PP&L APPROVAL.

Docket #50-387
Contrl #8303220117-142
Date 3/10/83 of Document:
REGULATORY DOCKET FILE

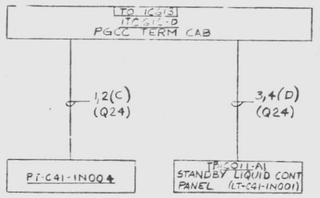

F/C-NM

STANDBY LIQUID CONTROL TANK LEVEL AND PUMP PRESSURE INDICATION

SCHEME 1Q0206

REF. SH 2

REFERENCE DWG'S.	
BECHTEL NO.	PL. NO.
E-42	A-107191
8856-MI-C41-36	FF-121010
E-241	D-107390
E-324	D-107473

No.	DATE	REVISIONS	BY	CHK	ENGR	APP'D
A	7/1/71	REVISED TO INCORPORATE FCR 71-0563	VA	RD	TC	BV
A	8/23/82	"REISSUED "AS BUILT" INCORP'D FCN-E-3242	VA	GM	TC	BV
A	7/19/82	ISSUED "AS BUILT"	RS	TFM	KM	BV
A	7/25/79	ISSUED FOR CONSTRUCTION	BZ	JW MJT	KM	BV
A	5/10/78	ISSUED FOR INFORMATION	AT	JW	KM	BV

SCALE — DESIGNED A. VAUSE DRAWN A. THOMAS CHK'D ENGR'D SUPV'D ENGR'D PROJ. ENGR APP'D

PENNSYLVANIA POWER & LIGHT COMPANY
ALLENTOWN, PENNSYLVANIA
SUSQUEHANNA STEAM ELECTRIC STATION - UNIT 1, UNIT 2
BECHTEL - SAN FRANCISCO

SCHEMATIC DIAGRAM
STANDBY LIQUID CONTROL SYSTEM
UNIT 1

JOB No.	DRAWING No.	REV.
8856	E-166 SH 4	8

D-107315 SH 4

UNCONTROLLED DOCUMENT FOR REFERENCE ONLY

GITSO ECHEN STBY LIQUID CONT SYS W

24X

I certify that the microfilmed image contained on this microform was made in the normal and regular course of business. This is a true, full, correct and complete reproduction and replacement for and/or in lieu of original documents processed by the Bechtel group of companies.
DANNY 8-25-82 MRG 1
Camera Operator

D

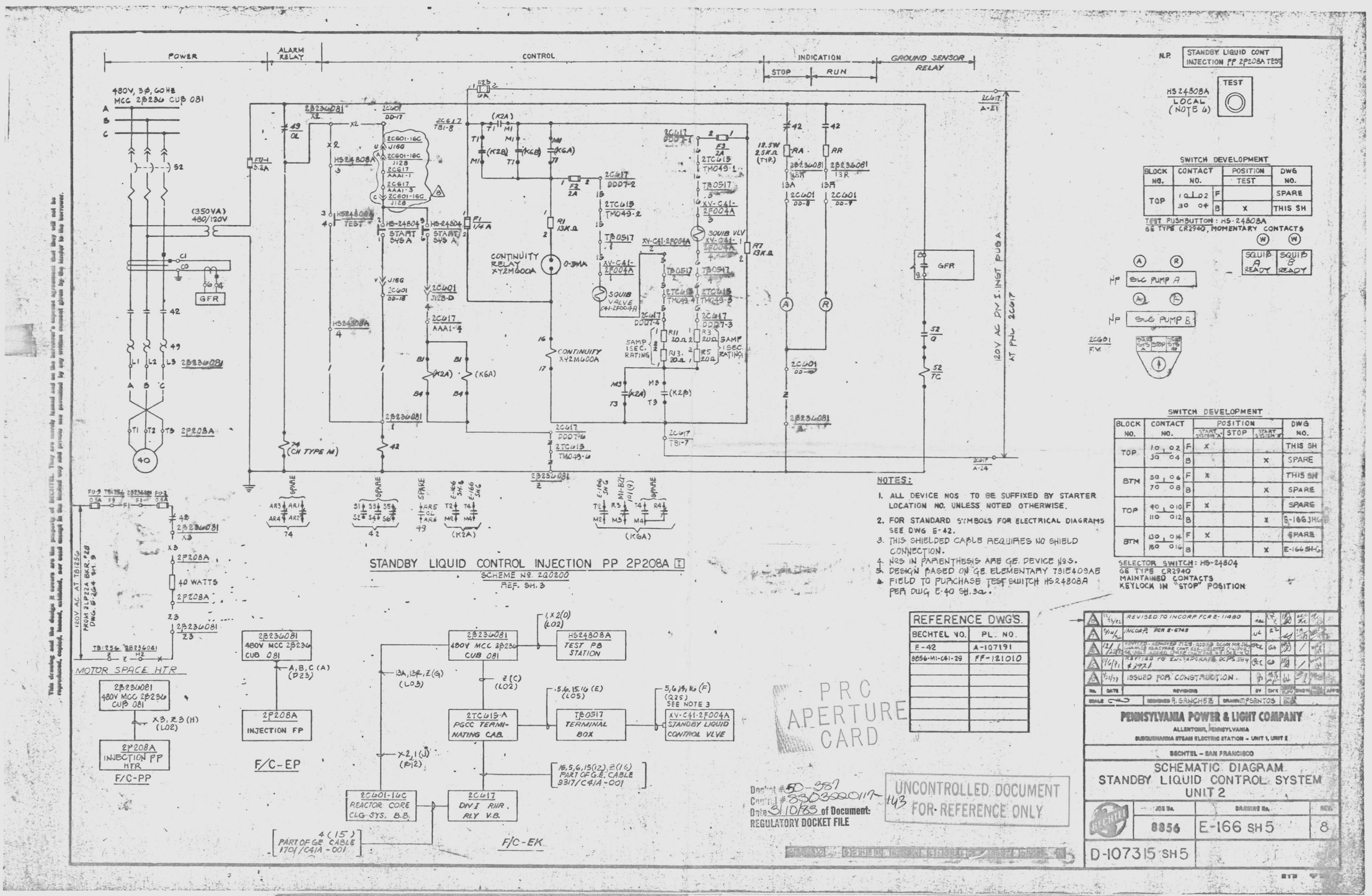

N.P. STANDBY LIQUID CONT INJECTION PP 2P208A TEST

HS24808A LOCAL (NOTE 4) — TEST

SWITCH DEVELOPMENT

BLOCK NO.	CONTACT NO.		POSITION TEST	DWG NO.
TOP	1Ø–02	F		SPARE
	3Ø–04	B	X	THIS SH

TEST PUSHBUTTON: HS-24808A
GE TYPE CR2940, MOMENTARY CONTACTS

SQUIB A READY	SQUIB B READY
(W)	(W)

NP SLC PUMP A (A) (R)

NP SLC PUMP B (A) (R)

2C601 F.M. — START SYSTEM A | STOP | START SYSTEM B

SWITCH DEVELOPMENT

BLOCK NO.	CONTACT NO.		POSITION START SYSTEM 'A'	POSITION STOP	POSITION START SYSTEM 'B'	DWG NO.
TOP	1Ø–02	F	X			THIS SH
	3Ø–04	B			X	SPARE
BTM	5Ø–06	F	X			THIS SH
	7Ø–08	B			X	SPARE
TOP	9Ø–010	F	X			SPARE
	11Ø–012	B			X	E-166 JHG
BTM	13Ø–014	F	X			SPARE
	15Ø–016	B			X	E-166 SH G

SELECTOR SWITCH: HS-24804
GE TYPE CR2940
MAINTAINED CONTACTS
KEYLOCK IN "STOP" POSITION

NOTES:

1. ALL DEVICE NOS TO BE SUFFIXED BY STARTER LOCATION NO. UNLESS NOTED OTHERWISE.
2. FOR STANDARD SYMBOLS FOR ELECTRICAL DIAGRAMS SEE DWG E-42.
3. THIS SHIELDED CABLE REQUIRES NO SHIELD CONNECTION.
4. NOS IN PARENTHESIS ARE GE DEVICE NOS.
5. DESIGN BASED ON GE ELEMENTARY 731E409AE
6. FIELD TO PURCHASE TEST SWITCH HS24808A PER DWG E-40 SH.3a.

REFERENCE DWG'S.

BECHTEL NO.	PL. NO.
E-42	A-107191
8856-MI-C41-29	FF-121010

NO.	DATE	REVISIONS	BY	CHK'D	TECH	ENGR	APPD
13	3/4/82	REVISED TO INCORP FCR E-11480	RAL	KE	RW	MC	
12	9/4/81	INCORP FCR E-6745	LC	EL			
11	1/21/81	REVISED - REMOVED FU29, ADDED JC601 FOR JHG (CABLE ADDED) SWITCH ON PNL 2C617 SH 1	SEC	GD	RW	MC	
10	11/6/81	REVISED TO INCORPORATE DCPS 5814 & 5971	SEC	GD			
9	7/1/77	ISSUED FOR CONSTRUCTION.	JH				

SCALE: NONE — DESIGNED A. SANCHEZ — DRAWN M. SANTOS

PENNSYLVANIA POWER & LIGHT COMPANY
ALLENTOWN, PENNSYLVANIA
SUSQUEHANNA STEAM ELECTRIC STATION – UNIT 1, UNIT 2
BECHTEL – SAN FRANCISCO

SCHEMATIC DIAGRAM
STANDBY LIQUID CONTROL SYSTEM
UNIT 2

JOB No.	DRAWING No.	REV.
8856	E-166 SH 5	8

D-107315 SH 5

PRC APERTURE CARD

Docket #50-387
Control #8303220117
Date 3/10/83 of Document:
REGULATORY DOCKET FILE

UNCONTROLLED DOCUMENT
FOR REFERENCE ONLY
143

This drawing and the design it covers are the property of BECHTEL. They are not to be used in connection with any work other than that specifically authorized by the agency for which they were prepared and are not to be reproduced, copied, loaned, exhibited, nor used except in the limited way and for the purpose authorized.

24X

I certify that the microfilmed image contained on this microform were made in the normal and regular course of business. This is a true, full, correct and complete reproduction and replacement for and/or in lieu of original documents generated by the Bechtel group of companies.
Signed DANNY Date 2-27-83 Camera Type MRG1
Camera Operator

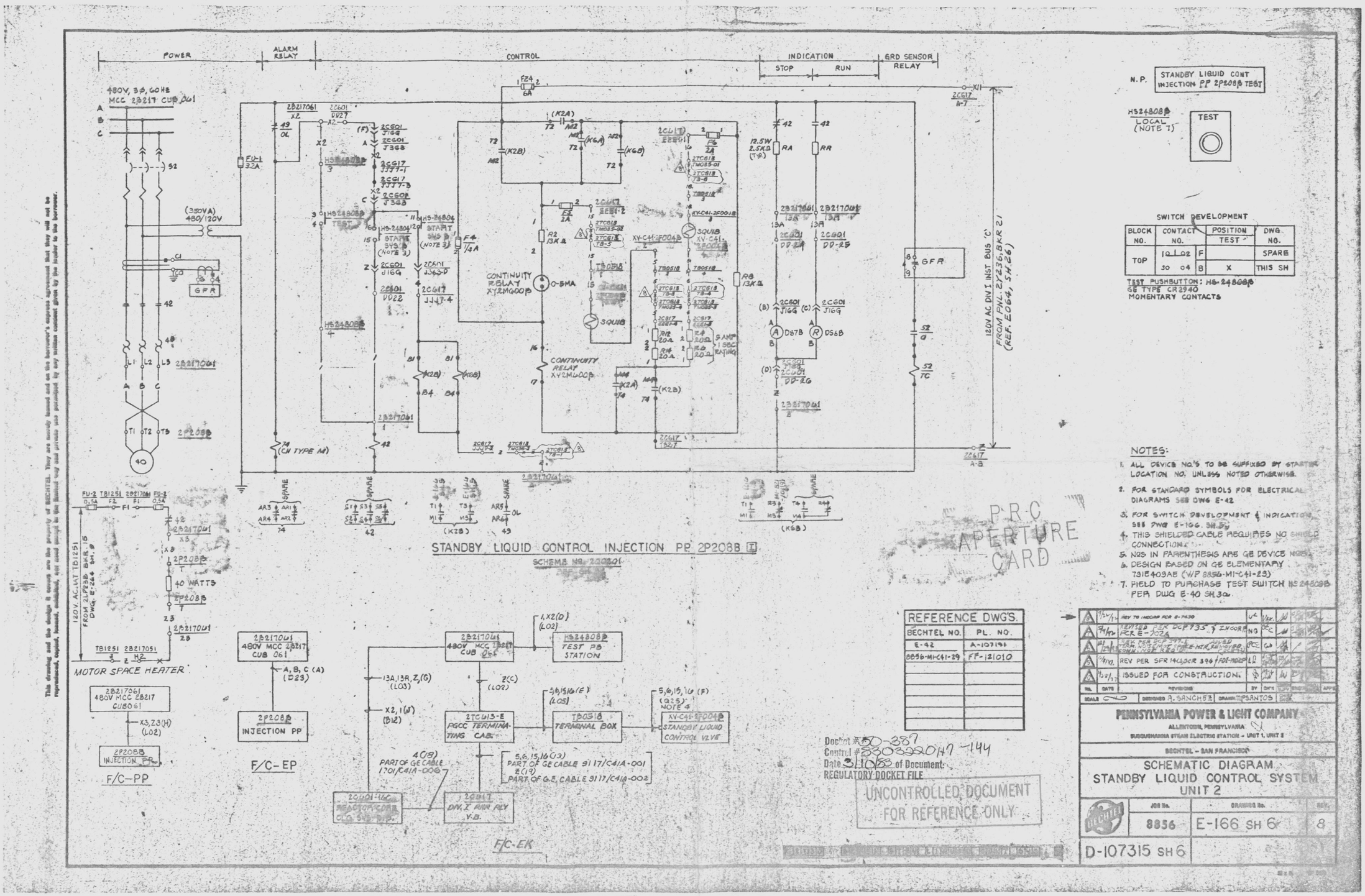

N.P. STANDBY LIQUID CONT INJECTION PP 2P208B TEST

HS24808B LOCAL (NOTE 7)

TEST

SWITCH DEVELOPMENT

BLOCK NO.	CONTACT NO.		POSITION TEST	DWG. NO.
TOP	10 02	F		SPARE
	30 04	B	X	THIS SH

TEST PUSHBUTTON: HS-24808B
GE TYPE CR2940
MOMENTARY CONTACTS

NOTES:

1. ALL DEVICE NO.'S TO BE SUFFIXED BY STARTING LOCATION NO. UNLESS NOTED OTHERWISE.
2. FOR STANDARD SYMBOLS FOR ELECTRICAL DIAGRAMS SEE DWG E-42
3. FOR SWITCH DEVELOPMENT & INDICATION SEE DWG E-166, SH. 5
4. THIS SHIELDED CABLE REQUIRES NO SHIELD CONNECTION
5. NOS IN PARENTHESIS ARE GE DEVICE NOS.
6. DESIGN BASED ON GE ELEMENTARY 731E403AE (WP 8856-MI-C41-23)
7. FIELD TO PURCHASE TEST SWITCH HS 24808B PER DWG E-40 SH 30.

REFERENCE DWG'S.	
BECHTEL NO.	PL. NO.
E-42	A-107191
8856-MI-C41-29	FF-121010

NO.	DATE	REVISIONS	BY	CH'K	ENGR	APPD
A	9/27/71	REV TO INCORP FCR E-7430	UC	VER		
A	9/14/72	REVISED PER DCP 735 & INCORP FCR E-702A	NG	RC		
A	1/5/73	ADD PER DCP 735A, REVISED CONN. NOTE & RELOCATED HTR. REVISED	RC	CD		
A	2/9/73	REV PER SFR 1413 & CR 396 / FOR RECORD	LD			
A	9/27/73	ISSUED FOR CONSTRUCTION.				

SCALE: NONE | DESIGNED: A. SANCHEZ | DRAWN: M. SANTOS

PENNSYLVANIA POWER & LIGHT COMPANY
ALLENTOWN, PENNSYLVANIA
SUSQUEHANNA STEAM ELECTRIC STATION - UNIT 1, UNIT 2
BECHTEL - SAN FRANCISCO

SCHEMATIC DIAGRAM
STANDBY LIQUID CONTROL SYSTEM
UNIT 2

JOB No.	DRAWING No.	REV.
8856	E-166 SH 6	8
D-107315 SH 6		

This drawing and the design it covers are the property of BECHTEL. They are merely loaned and on the borrower's express agreement that they will not be reproduced, copied, loaned, exhibited, nor used except to the limited way and purpose given by the lender to the borrower.

P.R.C. APERTURE CARD

Docket # 50-387
Control # 8303220147-144
Date 3/10/83 of Document:
REGULATORY DOCKET FILE
UNCONTROLLED DOCUMENT FOR REFERENCE ONLY

24X

I certify that the microfilmed image contained on this microform were made in the normal and regular course of business. This is a true, full, correct and complete reproduction and replacement for and/or in lieu of original documents generated by the Bechtel group of companies.
Signed P. Akins Date 9-28-82 Camera Type MRG 1
Camera Operator

D

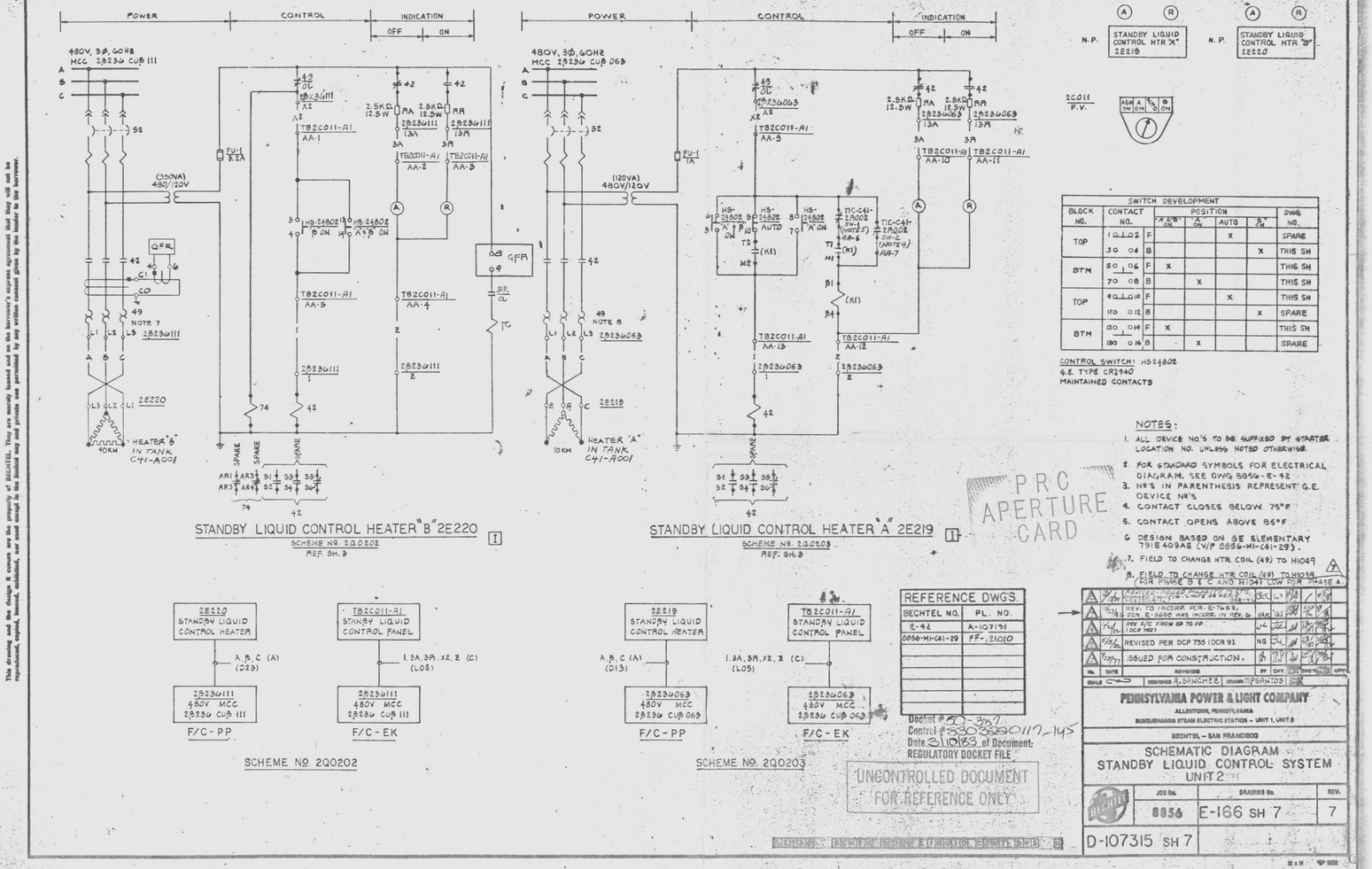

SWITCH DEVELOPMENT

BLOCK NO.	CONTACT NO.		POSITION A ON	POSITION AUTO	POSITION B ON	DWG NO.
TOP	1 — 02	F		X		SPARE
	3 — 04	B			X	THIS SH
BTM	5 — 06	F	X			THIS SH
	7 — 08	B		X		THIS SH
TOP	9 — 10	F		X		THIS SH
	11 — 12	B			X	SPARE
BTM	13 — 14	F	X			THIS SH
	15 — 16	B		X		SPARE

CONTROL SWITCH: HS24802
G.E. TYPE CR2940
MAINTAINED CONTACTS

NOTES:

1. ALL DEVICE NO'S TO BE SUFFIXED BY STARTER LOCATION NO. UNLESS NOTED OTHERWISE.
2. FOR STANDARD SYMBOLS FOR ELECTRICAL DIAGRAM, SEE DWG 8856-E-42
3. NO'S IN PARENTHESIS REPRESENT G.E. DEVICE NO'S.
4. CONTACT CLOSES BELOW 75°F
5. CONTACT OPENS ABOVE 85°F
6. DESIGN BASED ON GE ELEMENTARY 731E409AE (V/P 8856-MI-C41-29).
7. FIELD TO CHANGE HTR COIL (49) TO H1049
8. FIELD TO CHANGE HTR COIL (49) TO H1039 (FOR PHASE B & C AND H1041 FOR PHASE A)

REFERENCE DWGS.	
BECHTEL NO.	PL. NO.
E-42	A-107171
8856-MI-C41-29	FF-21010

NO.	DATE	REVISIONS	BY	CHK	ENG	PROJ	APPR
A	10/4/77	REVISED PER DCP 735 (DCR 91)	NG				
A	7/14/77	ISSUED FOR CONSTRUCTION.					

DESIGNED R.SANCHEZ | DRAWN M.SANTOS

PENNSYLVANIA POWER & LIGHT COMPANY
ALLENTOWN, PENNSYLVANIA
SUSQUEHANNA STEAM ELECTRIC STATION – UNIT 1, UNIT 2

BECHTEL – SAN FRANCISCO

SCHEMATIC DIAGRAM
STANDBY LIQUID CONTROL SYSTEM
UNIT 2

JOB No.	DRAWING No.	REV.
8856	E-166 SH 7	7

D-107315 SH 7

Docket # 50-387
Control # 8303290117-145
Date 3/10/83 of Document
REGULATORY DOCKET FILE

UNCONTROLLED DOCUMENT
FOR REFERENCE ONLY

PRC APERTURE CARD

This drawing and the design it covers are the property of BECHTEL. They are merely loaned and on the borrower's express agreement that they will not be reproduced, copied, lensed, published, nor used except in the limited way and private use permitted by any written consent given by the lender to the borrower.

24X
I certify that the microfilmed image contained on this microform were made in the normal and regular course of business. This is a true, full, correct and complete reproduction and representation for and/or in lieu of original documents maintained by the Bechtel corporate companies.
P.C. AKINS
11-1-82
Camera Type: MRG 1

D

This drawing and the design it covers are the property of BECHTEL. They are merely loaned and on the borrower's express agreement that they will not be reproduced, copied, loaned, exhibited, nor used except in the limited way and private use permitted by any written consent given by the lender to the borrower.

POWER | ALARM RELAY | CONTROL: CLOSE, OPEN | INDICATION: CLOSE, OPEN | ALARM E-324, SH.4

480V, 3Ø, 60HZ
MCC 2B236 CUB 044

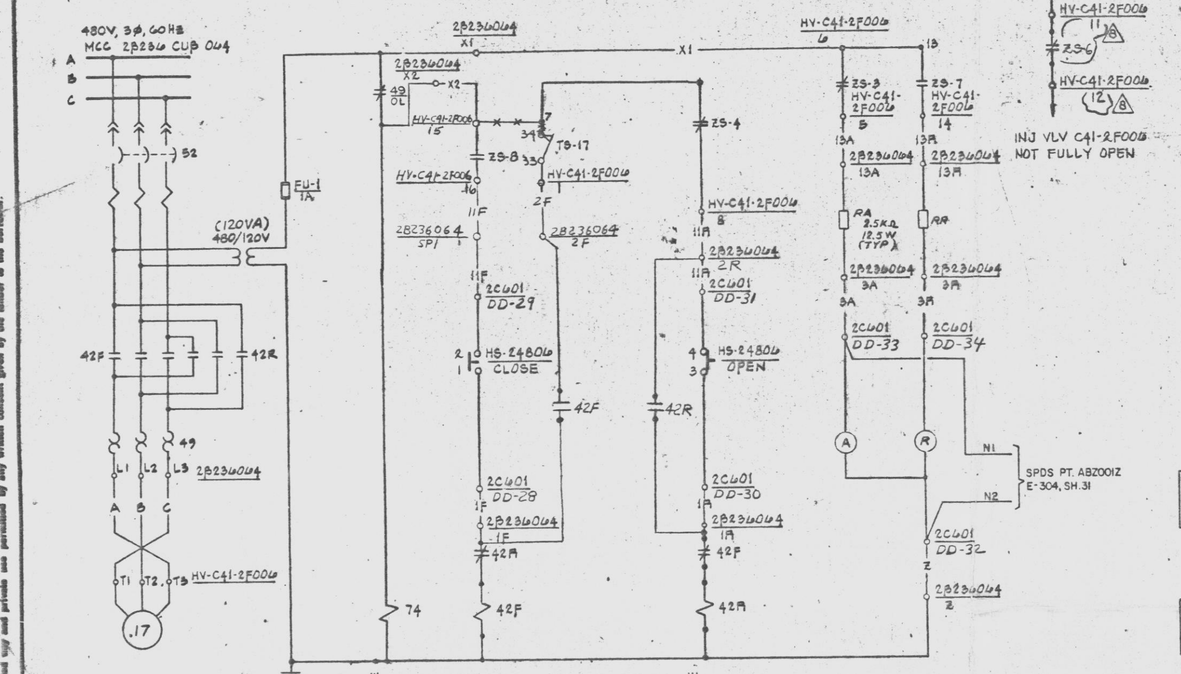

STANDBY LIQUID CONTROL INJECTION VALVE HV-C41-2F006 [1]
SCHEME NO. 220204
REF. SH. 2

HV-C41-2F006 11 ZS-6 12 HV-C41-2F006 (A) (B)
INJ VLV C41-2F006 NOT FULLY OPEN

2C601 F.V.

A	R
SLC. INJECTION VALVE F006	
CLOSE	OPEN

BLOCK No.	CONTACT No.		POSITION CLOSE	POSITION OPEN	DRAWING No.
TOP	1 o o 2	F	X		THIS SH
	3 o o 4	B		X	THIS SH
BTM	5 o o 6	F	X		SPARE
	7 o o 8	B		X	SPARE

CONTROL SWITCH: HS24806
GENERAL ELECTRIC TYPE CR2940
2 POSITION SWITCH MAINTAINED
CONTACTS KEY LOCKED IN OPEN

(B)

VALVE LIMIT SWITCH DEVELOPMENT

CONTACTS		100% OPEN	INTERMEDIATE	100% CLOSED	CONTACT USED
ZS-1	A o—o B				SPARE
ZS-2	C o—o D				E-380-12
ZS-3	E o—o F				SPARE
ZS-4	G o—o H				SPARE
ZS-5	A o—o B				SPARE
ZS-6	C o—o D				E-380-12
ZS-7	E o—o F				SPARE
ZS-8	G o—o H				SPARE

CONTACT CLOSED
FOR VLV HV-C41-2F008

VALVE LIMIT SWITCH DEVELOPMENT

CONTACTS		100% OPEN	INTERMEDIATE	100% CLOSED	CONTACT USED
ZS-1	1 o—o 2				SPARE
ZS-2	3 o—o 4				SPARE
ZS-3	5 o—o 6				THIS SH
ZS-4	7 o—o 8				THIS SH
ZS-5	9 o—o 10				SPARE
ZS-6	11 o—o 12				THIS SH
ZS-7	13 o—o 14				THIS SH
ZS-8	15 o—o 16				THIS SH
ZS-9	17 o—o 18				SPARE
ZS-10	19 o—o 20				SPARE
ZS-11	21 o—o 22				SPARE
ZS-12	23 o—o 24				SPARE
ZS-13	25 o—o 26				SPARE
ZS-14	27 o—o 28				SPARE
ZS-15	29 o—o 30				SPARE
ZS-16	31 o—o 32				SPARE
TS-17	33 o—o 34	OPEN ON HIGH CLOSING TORQUE			THIS SH
TS-18	35 o—o 36	OPEN ON HIGH OPENING TORQUE			SPARE

CONTACT CLOSED
(A) FOR VLV HV-C41-2F006

NOTES:
1. ALL DEVICE NO.'S TO BE SUFFIXED BY STARTER LOCATION NO. UNLESS NOTED OTHERWISE.
2. FOR STANDARD SYMBOLS FOR ELECTRICAL DIAGRAMS SEE 8856-E-42.
3. DESIGN BASED ON G.E. ELEMENTARY 791E409AE (W/P 8856-MI-C41-29).
4. NOS IN PARENTHESIS ARE GE DEVICE NOS.
5. FOR POWER SUPPLY TO PANEL 2TC615-B DWG. E-44, SH.27.
6. FOR HV-C41-2F006 SPACE HEATER, SEE DWG. E-241, SH.13.

2C601-16C
REAC CORE
CLG. 545 PNL
3A, 3B, X1 (C) (L03)
2W10AA
3A, 3B, X1 (D) (203)
HV-C41-2F008

F/C-EK
VALVE HV-C41-2F008 POSITION INDICATION [1]
SCHEME NO. 220207
REF. SH. 2

2B236044
480V MCC
2B236 CUB 044
A, B, C (A) (D13)
HV-C41-2F006
F/C-EP

2B236044
480V MCC
2B236 CUB 064
1F, 1A, 3A, 3B, 11F, 11A, Z (C) (L07)
2F, 11F, 4A, 13A, 13B, X1, X2 (D) (L07)
2C601-16C
REAC CORE
CLG 545 P.P.
HV-C41-2F006
F/C-EK

TO 2C613
2TC615-D
PGCC TERM CAB
1, 2 (C) (Q24)
3, 4 (D) (Q24)
PT-C41-2N004
TB2C011-A1
STANDBY LIQUID CONT PNL (LT-C41-2N001)
F/C-NM
STANDBY LIQUID CONTROL TANK LEVEL AND PUMP PRESSURE INDICATION
SCHEME NO. 220209
REF. SH. 2

REFERENCE DWG'S.	
BECHTEL NO.	PL. NO.
E-42	A-107191
8856-MI-C41-29	FP-121010
E-241	D-107390
E-324	D-107473

Docket #50-387
Control #8308220117-146
Date 3/10/83 of Document:
REGULATORY DOCKET FILE

UNCONTROLLED DOCUMENT FOR REFERENCE ONLY

PRC APERTURE CARD

3	1/6/83	REVISED TO INCORP FCN E-3873 & FOR E-7359.	NG					
2	12/17/82	REV TO INCORP FCN E-3866	JA					
1	4/1/82	REVISED PER DCP 558.2E, REV.2	NG					
0	4/14/81	REVISED PER DCP 414/3 & INCORP FCR E-4245	JA					
	1/1/77	ISSUED FOR CONSTRUCTION.						
NO.	DATE	REVISIONS	BY	CHK'D	APP'D			

SCALE: NONE | DESIGNED R. SANCHEZ | DRAWN M. PSANTOS

PENNSYLVANIA POWER & LIGHT COMPANY
ALLENTOWN, PENNSYLVANIA
SUSQUEHANNA STEAM ELECTRIC STATION – UNIT 1, UNIT 2
BECHTEL – SAN FRANCISCO

SCHEMATIC DIAGRAM
STANDBY LIQUID CONTROL SYSTEM
UNIT 2

JOB No.	DRAWING No.	REV.
8856	E-166 SH 8	8

D-107315 SH 8

24X

I certify that the microfilmed images contained on this microform were made in the normal and regular course of business. This is a true, full, correct and complete reproduction and replacement for and/or in lieu of original documents owned by the Bechtel group of companies.
Camera Operator JACINTO Date 1/21/83 Camera Type MRG I

D

This drawing and the design it covers are the property of BECHTEL. They are merely loaned and on the borrower's express agreement that they will not be reproduced, copied, loaned, exhibited, nor used except in the limited way and private use permitted by any written consent given by the lender to the borrower.

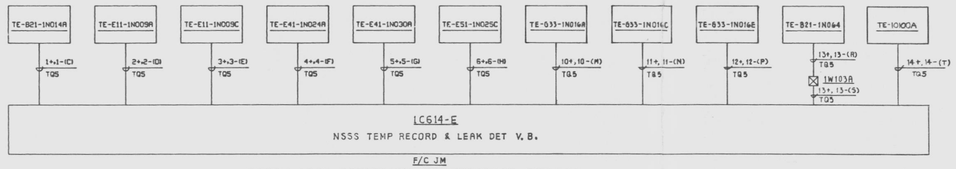

STEAM LEAK DETECTION TEMPERATURE RECORD

SCHEME NO. 1Q0707

REF. SH. 7

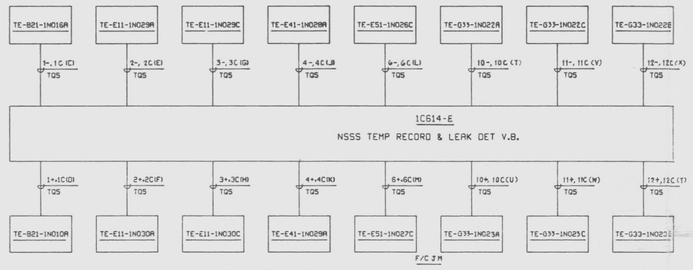

STEAM LEAK DETECTION DIFFERENTIAL TEMPERATURE RECORD

SCHEME NO. 1Q0708

REF. SH. 7

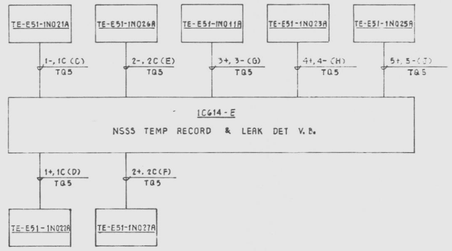

STEAM LEAK DETECTION TEMPERATURE RECORD

SCHEME NO. 1Q0711

REF. SH.7

NOTES:

1. FOR STANDARD SYMBOLS FOR ELECTRICAL DIAGRAMS SEE 8856-E-42
2. 1C614 PANEL IS TO BE DIVIDED VERTICALLY INTO TWO (2) MAIN DIVISIONS (DIV I & DIV II). WITHIN DIV I THE RCIC ITEMS ARE TO BE MOUNTED WITHIN A METAL ENCLOSURE WITH REMOVABLE COVER TERMINAL BOARDS ARE TO BE LOCATED WITHIN THE ENCLOSURE WITH ALL THE FIELD AND PANEL INTERCONNECTIONS MADE VIA CONDUITS.
3. SAME AS NOTE 2 EXCEPT RCIC ITEMS WITHIN DIVISION II.
4. DESIGN BASED ON GE-APED ELEMENTARY 79 1E425AE (V/P 8856-M1-B21-98).
5. FOR INSTR. POWERS TO PANEL 1C614 SEE DWG. E-64 SH.15,17.

PRC APERTURE CARD

THIS DOCUMENT IS UNDER PP&L ADMINISTRATIVE CONTROL. NO CHANGES CAN BE MADE WITHOUT PRIOR PP&L APPROVAL.

REFERENCE DWG'S.	
BECHTEL NO.	PL. NO.
E-12	A-107190
E-25 SH 1	E-107174 SH1
E-26 SH 2	E-107175 SH2
M1-B21-98	FF 114510

Docket # 50-387
Control # 8803220117
Date 3/10/88 of Document:
REGULATORY DOCKET FILE

No.	DATE	REVISIONS	BY	CHK	DESIGN ENG'G SUPV	ENG'G MGR	APP'D
A	7/31/91	INCORP IDCN 1 (DCP 338 REV. 0)	MT	MT			
A	2/14/91	REVISED NOTE 5	MT	MT			
A	7/9/90	ISSUED "AS BUILT"	TJY	FMH			
A	5/16/88	ISSUED FOR CONSTRUCTION	JM	MT			
A	8/1/87	ISSUED FOR INFORMATION	MT	AB			

SCALE NONE | DESIGNED H. VAUSE | DRAWN | CHK'D ENG'R

PENNSYLVANIA POWER & LIGHT COMPANY
ALLENTOWN, PENNSYLVANIA
SUSQUEHANNA STEAM ELECTRIC STATION – UNIT 1, UNIT 2

BECHTEL – SAN FRANCISCO

BLOCK DIAGRAM
STEAM LEAK DETECTION SYSTEM
UNIT 1

JOB No.	DRAWING No.	REV.
8856	E-168 SH 1	4

D-107317 SH 1

REGISTERED PROFESSIONAL ENGINEER EDWARD K. KANG

UNCONTROLLED DOCUMENT FOR REFERENCE ONLY

GIT 45 BLK DIAG STM LK DETCTN SYS W

22 x 36 "D" SIZE

24X

I certify that the microfilmed image contained on this microform were made in the normal and regular course of business. This is a true, full, correct and complete reproduction and replacement for and/or in lieu of original documents generated by the Bechtel group of companies.

Signed JACOBO Date 6-17-82 Camera Type MKO I
Camera Operator

D

This drawing and the design it covers are the property of BECHTEL. They are not to be reproduced, copied, loaned, exhibited, nor used except in the limited way and private use permitted by any written consent given by the lender to the borrower.

TE-E41-1N028A | TE-E41-1N029A | TE-E41-1N024A | TE-E41-1N030A | TE-E11-1N029A | TE-E11-1N030A | TE-E11-1N029C

1-,1C (C) TQ5 | 2+,1C (D) TQ5 | 3+,3- (E) TQ5 | 4+,4- (F) TQ5 | 5-,5C (G) TQ5 | 6+,5C (H) TQ5 | 7-,7C (J) TQ5

1C614-A
NSSS TEMP RECORD & LEAK DET V.B.

8+,7C (K) TQ5 | 9+,9- (L) TQ5 | 10+,10- (M) TQ5 | 11-,11C (N) TQ5 | 12+,11C (P) TQ5 | 13+,13- (R) TQ5 | 14-,14C (S) TQ5

TE-E11-1N030C | TE-E11-1N009A | TE-E11-1N009C | TE-C33-1N022A | TE-C33-1N023A | TE-C33-1N016A | TE-C33-1N022C

F/C SH.

STEAM LEAK DETECTION
SCHEME NO. 1Q0701
REF. SH. 4 & 5

TE-C33-1N023C | TE-C33-1N016C | TE-C33-1N022E | TE-C33-1N023E | TE-C33-1N016E | TE-B21-1N018A | TE-B21-1N010A | TE-101008

15+,14C (C) TQ5 | 16+,16- (D) TQ5 | 17-,17C (E) TQ5 | 18+,17C (F) TQ5 | 19+,19- (G) TQ5 | 20-,20C (H) TQ5 | 21+,20C (J) TQ5 | 30+,30-(U) TQ5

1C614-A
NSSS TEMP RECORD & LEAK DET V.B.

22-,22C (K) TQ5 | 23+,22C (L) TQ5 | 24+,24- (M) TQ5 | 25+,25- (N) TQ5 | 26-,26C (P) TQ5 | 27+,26C (R) TQ5 | 28+,28-(S) TQ5 | 29+,29-(T) TQ5

TE-B21-1N016B | TE-B21-1N010B | TE-B21-1N014A | TE-B21-1N014B | TE-E51-1N028C | TE-E51-1N027C | TE-E51-1N025C | TE-101004

F/C SH.

STEAM LEAK DETECTION
SCHEME NO. 1Q0702
REF. SH. 5 & 6

TE-E41-1N028B | TE-E41-1N029B | TE-E41-1N024B | TE-E41-1N030B | TE-E11-1N029B | TE-E11-1N030B | TE-E11-1N029D

1-,1C (C) TQ5 | 2+,1C (D) TQ5 | 3+,3- (E) TQ5 | 4+,4- (F) TQ5 | 5-,5C (G) TQ5 | 6+,5C (H) TQ5 | 7-,7C (J) TQ5

1C614-B
NSSS TEMP RECORD & LEAK DET V.B.

8+,7C (K) TQ5 | 9+,9- (L) TQ5 | 10+,10- (M) TQ5 | 11-,11C (N) TQ5 | 12+,11C (P) TQ5 | 13+,13- (R) TQ5 | 14-,14C (S) TQ5

TE-E11-1N030D | TE-E11-1N009B | TE-E11-1N009D | TE-C33-1N022B | TE-C33-1N023B | TE-C33-1N016B | TE-C33-1N022D

F/C SH.

STEAM LEAK DETECTION
SCHEME NO. 1Q0703
REF. SH. 4 & 5

TE-C33-1N023D | TE-C33-1N016D | TE-C33-1N022F | TE-C33-1N023F | TE-C33-1N016F | TE-B21-1N018C | TE-B21-1N010C | TE-101010

15+,14C (C) TQ5 | 16+,16- (D) TQ5 | 17-,17C (E) TQ5 | 18+,17C (F) TQ5 | 19+,19- (G) TQ5 | 20-,20C (H) TQ5 | 21+,20C (J) TQ5 | 30+,30-(U) TQ5

1C614-B
NSSS TEMP. RECORD & LEAK DET V.B.

22-,22C (K) TQ5 | 23+,22C (L) TQ5 | 24+,24- (M) TQ5 | 25+,25- (N) TQ5 | 26-,26C (P) TQ5 | 27+,26C (R) TQ5 | 29+,28-(S) TQ5 | 29+,29-(T) TQ5

TE-B21-1N016D | TE-B21-1N010D | TE-B21-1N014C | TE-B21-1N014D | TE-E51-1N028D | TE-E51-1N027D | TE-E51-1N025D | TE-101006

F/C SH.

STEAM LEAK DETECTION
SCHEME NO. 1Q0704
REF. SH. 5 & 6

Docket #50-387
Control #8303220117-148
Date 3/10/83 of Document:
REGULATORY DOCKET FILE

THIS DOCUMENT IS UNDER PP&L ADMINISTRATIVE CONTROL. NO CHANGES CAN BE MADE WITHOUT PRIOR PP&L APPROVAL.

TE-E51-1N021A | TE-E51-1N022A | TE-E51-1N011A | TE-E51-1N023A

1-,1C (C) TQ5 | 2+,1C (D) TQ5 | 3+,3- (E) TQ5 | 4+,4- (F) TQ5

1C614-C
NSSS TEMP RECORD & LEAK DET V.B.
(SEE NOTE 2 SH. 1)

5-,5C (G) TQ5 | 6+,5C (H) TQ5 | 7+,7- (J) TQ5

TE-E51-1N026A | TE-E51-1N027A | TE-E51-1N025A

F/C SH.

STEAM LEAK DETECTION
SCHEME NO. 1Q0705
REF. SH. 4 & 6

TE-E51-1N021B | TE-E51-1N022B | TE-E51-1N011B | TE-E51-1N023B

1-,1C (C) TQ5 | 2+,1C (D) TQ5 | 3+,3- (E) TQ5 | 4+,4- (F) TQ5

1C614-D
NSSS TEMP RECORD & LEAK DET V.B.
(SEE NOTE 3 SH.1)

5-,5C (G) TQ5 | 6+,5C (H) TQ5 | 7+,7- (J) TQ5

TE-E51-1N026B | TE-E51-1N027B | TE-E51-1N025B

F/C SH.

STEAM LEAK DETECTION
SCHEME NO. 1Q0706
REF. SH. 4 & 6

NOTES
1. FOR NOTES SEE E-168 SH 1.

REFERENCE DWG'S.	
SECTION NO.	FL. NO.
C-42	D-107196
B-821-96	FP. 114318

No.	DATE	REVISIONS	BY	CHK'D	DESIGN SUPV.	ENG'R	PROJ. ENGR.	APP'D
4	7/1/81	REVISED PER DCR #42	NG	MKH				
3	8/5/80	INCORP IDCN 1 (DCP 389 REV.0)						
2	5/14/80	ISSUED "AS BUILT" IDCN 1 (DCP 389) INCORP'D ON REV 2						
1	7/1/75	ISSUED FOR CONSTRUCTION						
0	3/1/74	ISSUED FOR INFORMATION			AB			

SCALE: NONE | DESIGNED: A. VRUSE | DRAWN: | CHIEF ENGR.

PENNSYLVANIA POWER & LIGHT COMPANY
ALLENTOWN, PENNSYLVANIA
SUSQUEHANNA STEAM ELECTRIC STATION - UNIT 1, UNIT 2

BECHTEL - SAN FRANCISCO

BLOCK DIAGRAM
STEAM LEAK DETECTION SYSTEM
UNIT 1

JOB No.	DRAWING No.	REV.
8856	E-168 SH 2	4

D-107317 SH 2

UNCONTROLLED DOCUMENT
FOR REFERENCE ONLY

PRC APERTURE CARD

EDWARD K. KANG
REGISTERED PROFESSIONAL ENGINEER
STATE OF CALIFORNIA

GTTES BLK CHG STM LK DETCTN SYS

24X

I certify that the microfilmed image contained on this microform work made in the normal and regular course of business. This is a true, full, exact copy of the original document or part thereof. In case of illegible, incomplete or poor quality copy, it is the best available copy.

RHEY MRG-II

D

This drawing and the design it covers are the property of BECHTEL. They are merely loaned and on the borrower's express agreement that they will not be reproduced, copied, loaned, exhibited, nor used except in the limited way and private use permitted by any written consent given by the lender to the borrower.

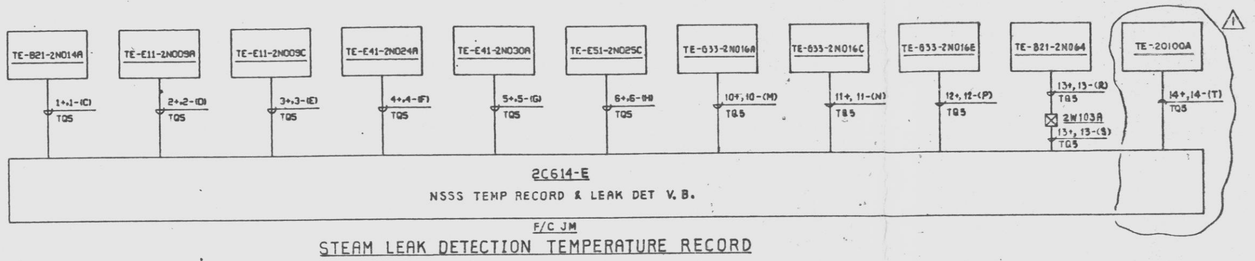

STEAM LEAK DETECTION TEMPERATURE RECORD

SCHEME NO. 200707

REF. SH. 7

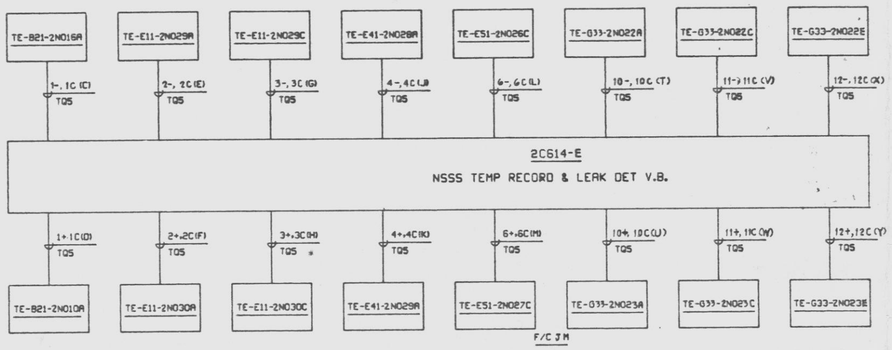

STEAM LEAK DETECTION DIFFERENTIAL TEMPERATURE RECORD

SCHEME NO. 200708

REF. SH. 7

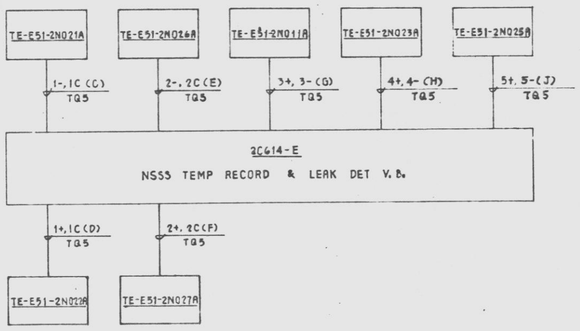

STEAM LEAK DETECTION TEMPERATURE RECORD

SCHEME NO. 200711

REF. SH. 7

NOTES:

1. FOR STANDARD SYMBOLS FOR ELECTRICAL DIAGRAMS SEE 8856-E-42.
2. 2C614 PANEL IS TO BE DIVIDED VERTICALLY INTO TWO (2) MAIN DIVISIONS (DIV I & DIV II). WITHIN DIV I THE RCIC ITEMS ARE TO BE MOUNTED WITHIN A METAL ENCLOSURE WITH REMOVABLE COVER TERMINAL BOARDS ARE TO BE LOCATED WITHIN THE ENCLOSURE WITH ALL THE FIELD AND PANEL INTERCONNECTIONS MADE VIA CONDUITS.
3. SAME AS NOTE 2 EXCEPT RCIC ITEMS WITHIN DIVISION II.
4. DESIGN BASED ON GE-APED ELEMENTARY 79 IE425AE (V/P 8856-M1-B21-98).
5. FOR INSTR. POWERS TO PANEL 2C614 SEE DWG. E-64.

Docket #50-387
Control #830302011?-149
Date 3/10/83 of Document:
REGULATORY DOCKET FILE

PRC APERTURE CARD

REFERENCE DWG'S.	
BECHTEL NO.	PL. NO.
E-42	A-107190
E-25 SH 1	E-107174 SH1
E-26 SH 2	E-107176 SH2
M1-821-98	FF-114510

No.	DATE	REVISIONS	BY	CHK'D	DESIGN SUPV.	ENG'R	PROJ ENGR.	APP'D
1	9/30/82	REV. TO INCORP. DCP 399.1	NG	TN				
0	7/30/82	ISSUED FOR CONSTRUCTION.	SS	JL				

SCALE NONE | DESIGNED SSHS | DRAWN JCB | CHK'R ENGR.

PENNSYLVANIA POWER & LIGHT COMPANY

ALLENTOWN, PENNSYLVANIA

SUSQUEHANNA STEAM ELECTRIC STATION – UNIT 1, UNIT 2

BECHTEL – SAN FRANCISCO

BLOCK DIAGRAM STEAM LEAK DETECTION SYSTEM UNIT 2

JOB No.	DRAWING No.	REV.
8856	E-168 SH 3	1

D-107317 SH 3

UNCONTROLLED DOCUMENT FOR REFERENCE ONLY

G2T4S BLK DIAG STM LK DETCTN SYS W

24X

I certify that the microfilmed image contained on this microform were made in the normal and regular course of business. This is a true, full, correct and complete reproduction and replacement for and/or in lieu of original documents generated by the Bechtel group of companies.
Signed. Danny Camera Operator Date 11-4-81 Camera Type MRC

D

This drawing and the design it covers are the property of BECHTEL. They are merely loaned and on the borrower's express agreement that they will not be reproduced, copied, loaned, exhibited, nor used except in the limited way and private use permitted by any written consent given by the holder to the borrower.

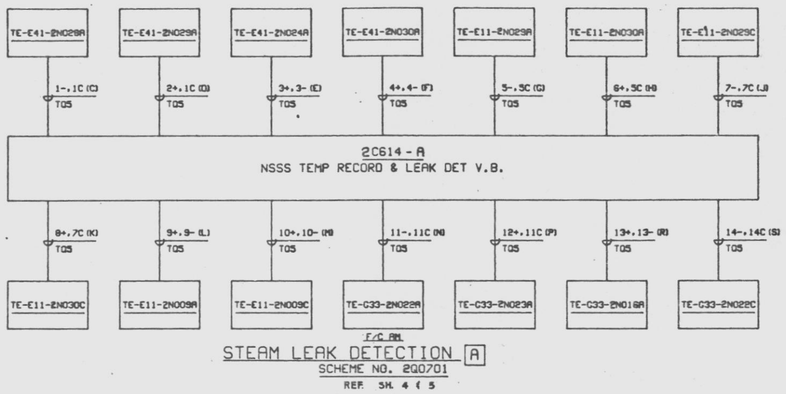

F/C RM.

STEAM LEAK DETECTION [A]

SCHEME NO. 2Q0701

REF. SH. 4 & 5

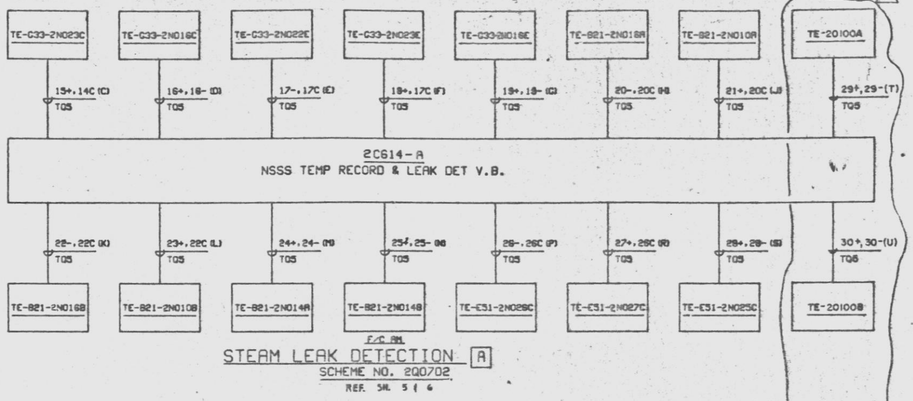

F/C RM.

STEAM LEAK DETECTION [A]

SCHEME NO. 2Q0702

REF. SH. 5 & 6

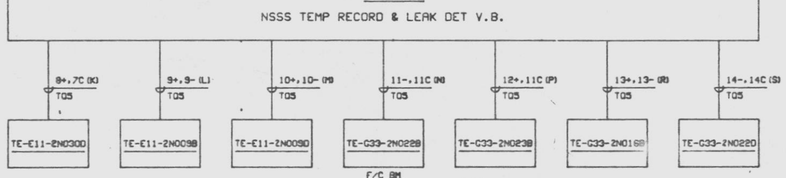

F/C RM.

STEAM LEAK DETECTION [B]

SCHEME NO. 2Q0703

REF. SH. 4 & 5

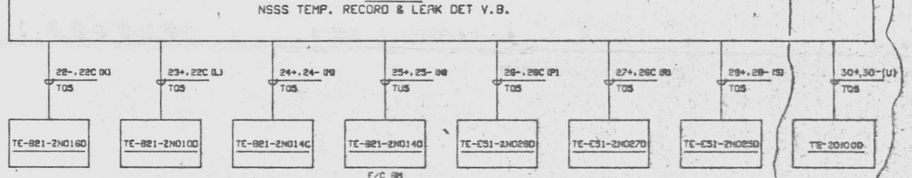

F/C RM.

STEAM LEAK DETECTION [B]

SCHEME NO. 2Q0704

REF. SH. 5 & 6

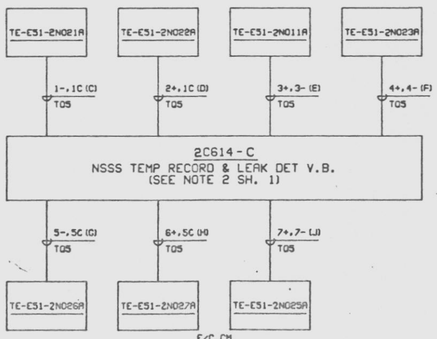

F/C CM.

STEAM LEAK DETECTION [C]

SCHEME NO. 2Q0705

REF. SH. 4 & 6

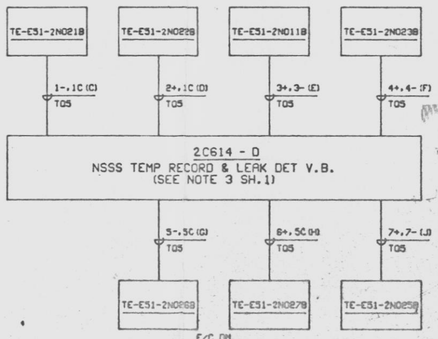

F/C CM.

STEAM LEAK DETECTION [D]

SCHEME NO. 2Q0706

REF. SH. 4 & 6

NOTES

1. FOR NOTES SEE E-168 SH 3.

REFERENCE DWGS.	
BECHTEL NO.	PL. NO.
E-42	A-107191
M1-821-98	FF 114310

No.	DATE	REVISIONS	BY	CHK	DESIGN SUPV	ENG MGR	PROJ ENGR	APP'D
2	3/4/83	REV. TO INCORR DCP 399.1	NG					
1	2/4/83	ISSUED FOR CONSTRUCTION						

SCALE NONE | DESIGNED SHIH CHIH | DRAWN J.C.B. | CHIEF ENGR.

PENNSYLVANIA POWER & LIGHT COMPANY

ALLENTOWN, PENNSYLVANIA

SUSQUEHANNA STEAM ELECTRIC STATION - UNIT 1, UNIT 2

BECHTEL - SAN FRANCISCO

BLOCK DIAGRAM
STEAM LEAK DETECTION SYSTEM
UNIT 2

JOB No.	DRAWING No.	REV.
8856	E-168 SH 4	1

D-107317 SH 4

20 x 34

GTES BLK DIAG STM LK DETCTN SYS M

PRC APERTURE CARD

Docket # 50-388
Control # 8303220112 150
Date 3/10/83 of Document:
REGULATORY DOCKET FILE

UNCONTROLLED DOCUMENT
FOR REFERENCE ONLY

24X

I certify that the microfilmed image contained on this microform were made in the normal and regular course of business. This is a true, full, correct and complete reproduction and replacement for and/or in lieu of original documents generated by the Bechtel group of companies.

Signed: Danny Camera Operator Date 11-4-91 Camera Type MRC

D

This drawing and the design it covers are the property of BECHTEL. They are expressly loaned and on the borrower's express agreement that they will not be reproduced, copied, loaned, exhibited, nor used except in the limited way and private use permitted by any written consent given by the lender to the borrower.

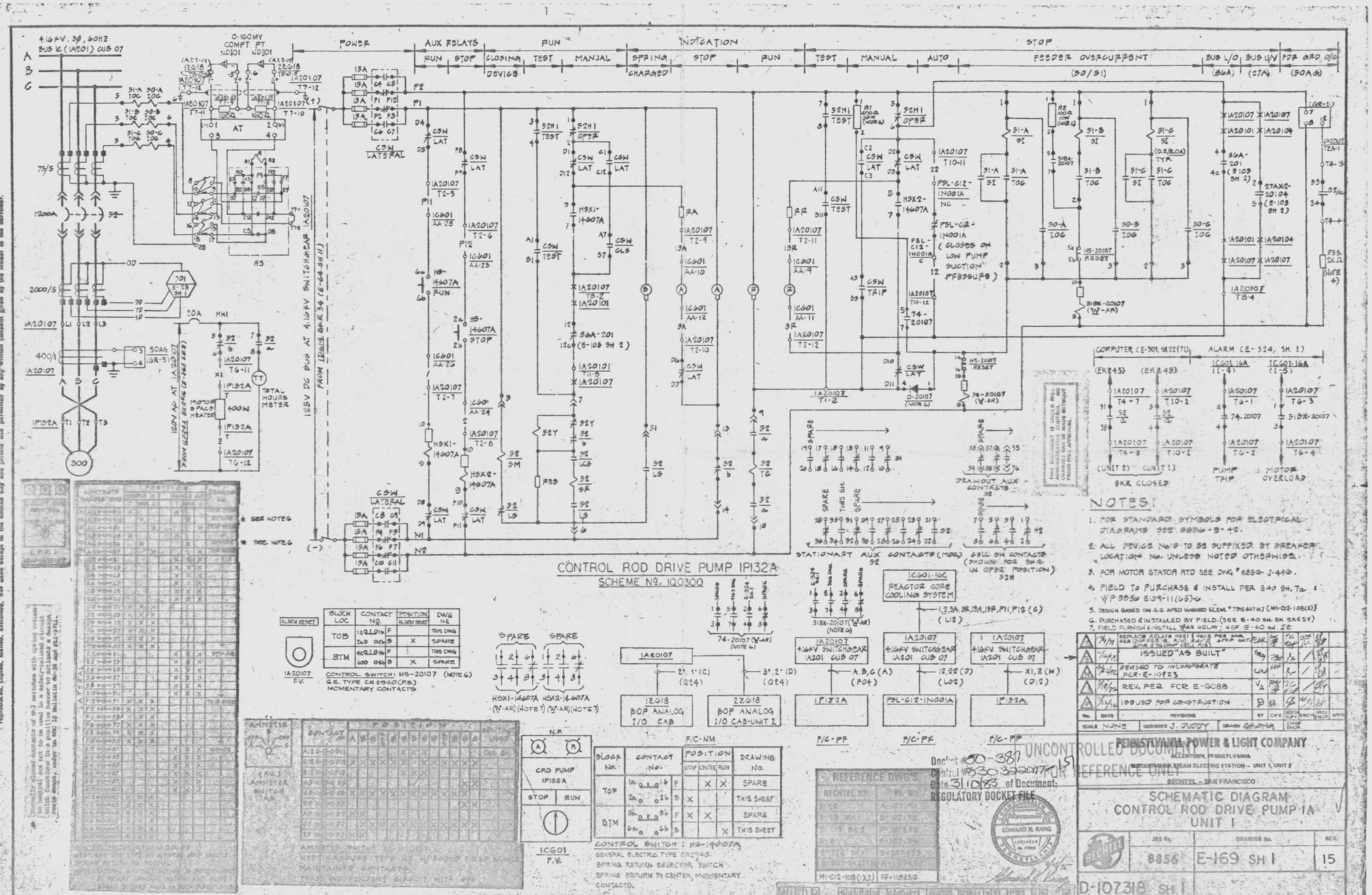

24X

I certify that the microfilmed image contained on this microform were made in the normal and regular course of business. This is a true, full, correct and complete reproduction and replacement for and/or in lieu of original documents generated by the Bechtel group of companies.
Signed RHEY Date 5-25-82 Camera Type MRG-1
Camera Operator

PRC APERTURE CARD

This drawing and the design it covers are the property of BECHTEL. They are merely loaned and on the borrower's express agreement that they will not be reproduced, copied, loaned, exhibited, nor used except in the limited way and private use permitted by any written consent given by the lender to the borrower.

CONTROL ROD DRIVE PUMP IP132B

SCHEME Nº. 1Q0301

POWER | AUX RELAYS | RUN | INDICATION | STOP

RUN | STOP | CLOSING DEVICE | TEST | MANUAL | SPRING CHARGED | STOP | RUN | TEST | MANUAL | AUTO | FEEDER OVERCURRENT (50/51) | BUS L/O (86A2) | BUS U/V (27A) | FDR GRD O/C (50A9)

4.16 KV, 3Ø, 60HZ BUS 1F (1A204) CUB 07

0-160MW COMPT PT. ND102 ND102

1200A | 2000/5 | 400/1 | 75/5 | 120V NC AT 1A20407 | 125V DC BUS AT 4.16KV SWITCHGEAR 1A20407 FROM 1D624 SHR 36 (E-64 SH 11)

IP132B | 300 | 400W | TOTAL HOURS MTR

CSW LATERAL

HSX1-14607B (W-AR) | HSX2-14607B (W-AR) | DCP 528.4E

CONTROL SWITCH: HS-20407 (NOTE 6) G.E. TYPE CR2940 (PBL) MOMENTARY CONTACTS

5181X-20407 (W-AR) (NOTE 6) | 74-20407 (W-AR) (NOTE 6)

CONTACTS HANDLE END	POSITION HANDLE IN			HANDLE OUT			DRAWING No.
	T	NORM	C	T	NORM	C	
A11 O-I-O B11	X				X		THIS SHEET
A 12 O-I-O B12		X				X	SPARE
A1 O-I-O B1			X			X	THIS SHEET
A5 O-I-O B5	X				X		SPARE
A6 O-I-O B6		X				X	SPARE
A7 O-I-O B7			X			X	THIS SHEET
C2 O-I-O C1				X	X	X	
C2 O-I-O C3				X	X	X	
C4 O-I-O C5				X	X	X	
C6 O-I-O C7				X	X	X	
C8 O-I-O C9				X	X	X	
C10 O-I-O C11				X	X	X	
D11 O-I-O D1	X	X	X				
D2 O-I-O D3	X	X	X				
D4 O-I-O D5	X	X	X				
D6 O-I-O D7	X	X	X				
D8 O-I-O D9	X	X	X				
D10 O-I-O D11	X	X	X				
S1 O-I-O S2				X	X	X	SPARE
S3 O-I-O S4				X	X	X	SPARE
S5 O-I-O S6				X	X	X	SPARE
S7 O-I-O S8				X	X	X	SPARE
S9 O-I-O S10				X	X	X	SPARE
S11 O-I-O S12				X	X	X	SPARE
P1 O-I-O P2	X	X	X				THIS SHEET
P3 O-I-O P4	X	X	X				
P5 O-I-O P6	X	X	X				
P7 O-I-O P8	X	X	X				
P9 O-I-O P10	X	X	X				
P11 O-I-O P12	X	X	X				
H1 O-I-O H2	X	X	X				
H3 O-I-O H4	X	X	X				
H5 O-I-O H6	X	X	X				
H7 O-I-O H8	X	X	X				
H9 O-I-O H10	X	X	X				
H11 O-I-O H12	X	X	X				

CONTROL SWITCH: CSW-1A20407
WESTINGHOUSE TYPE W2 W/PISTOL GRIP HANDLE SPRING RETURN TO NORMAL
NOTE: LATERAL CONTACT ACTION IS INDEPENDENT OF ROTARY CONTACT ACTION AND MUST BREAK BEFORE MAKE IN BOTH DIRECTIONS.

BLOCK LOC	CONTACT Nº	POSITION ALARM RESET		DWG. NO.
TOP	K1 Q1 O 1b	F		THIS DWG.
	2a O O 2b	B	X	SPARE
BTM	5a Q1 O 5b	F		THIS DWG.
	6a O O 6b	B	X	SPARE

* Normally closed contacts of M-2 switches with spring return to neutral are not to be used in safety related circuits which functions in a positive manner to actuate a device (single pushes, jerker to NRC IE Bulletin 80-20 and REA-9711).

AMMETER SWITCH: AS-1A20407
WESTINGHOUSE TYPE W2 W/ROUND KNOB HANDLE MAINTAINED CONTACTS
THREE INDEPENDENT CIRCUIT WITH GAP

CONTACT	POSITION A	B	C	CONTACT USED
A10 O-I-O B10		X	X	THIS SH.
C10 O-I-O D10	X	X	X	
E10 O-I-O F10		X	X	
A9 O-I-O B9				
C9 O-I-O D9	X	X	X	
E9 O-I-O F9				
A7 O-I-O B7	X			
C7 O-I-O D7	X	X	X	
E7 O-I-O F7	X	X	X	

CRD PUMP IP132B | STOP - RUN | 1CG01 F.V.

F/C-NM

BLOCK No.	CONTACT No.	POSITION STOP	CENTER	RUN	DRAWING NO.
TOP	1a O-I-O 1b	F		X	X	SPARE
	2a O O 2b	B	X			THIS SHEET
BTM	5a O-I-O 5b	F	X	X		SPARE
	6a O O 6b	B			X	THIS SHEET

CONTROL SWITCH: HS-1A20407
GENERAL ELECTRIC TYPE CR2940
SPRING RETURN SELECTOR SWITCH
SPRING RETURN TO CENTER MOMENTARY CONTACTS.

1A20407 → 2f, 1f (C) (Q24) | 3f, 2f (D) (Q24)

12G18 BOP ANALOG I/O CAB | 22G18 BOP ANALOG I/O CAB-UNIT 2

1A20407 4.16KV SWITCHGEAR 1A204 CUB 07 → A, B, C (A) (F04) | 12, 22 (B) (L02) | X1, Z (H) (D12)

1P132B F/C-RF | F9L-C12-1N001B F/C-RK | 1P132B F/C-RP

1CG01-16C REACTOR CORE COOLING SYSTEM → 1, 2, 3A, 3C, 13A, 13B, P11, P12 (C) (L12)

STATIONARY AUX CONTACTS (MOC) 52

DRAWOUT AUX. CONTACTS

52H SH CONTACTS (SHOWN FOR BKR IN OPER POSITION) 52H

COMPUTER (E-301, SH 3&4) (7B) ALARM (E-324, SH. 1)

1CG01 16A (E2G5) (2-4) | 1CG01 16A (E2G5) (2-5)

UNIT 2 | UNIT 1 | PUMP TRIP | MOTOR OVERLOAD

BKR CLOSED

NOTES:

1. FOR STANDARD SYMBOLS FOR ELECTRICAL DIAGRAMS SEE 8856-E-12.
2. ALL DEVICE NO'S TO BE SUFFIXED BY BREAKER LOCATION NO. UNLESS NOTED OTHERWISE.
3. FOR MOTOR STATOR RTD: SEE DWG # 8856 J-446.
4. FIELD TO PURCHASE AND INSTALL PER E 40 SH 7B AND V/P 8856-E103-14(61)-5.
5. DESIGN BASED ON G.E. APED MARKED ELEMENTARY #7815407 WJ [MI-C12-108(2)].
6. PURCHASED AND INSTALLED BY FIELD PER E 40 SH 3F, 3X AND 5Y.

REFERENCE DWG'S.	
BECHTEL NO.	PL NO.
E-42	A-107191
E-29 SH 1	B-107172
E-103 SH 2	D-107252
E-3	E-107134
E-324 SH 1	D-107473
E-301 SH 3&4 (7B)	D-107430
MI-C12-108(1)(2)	FF-118250

NO.	DATE	REVISIONS	BY	CHK'D	DESIGN SUPV.	PROJ. ENGR.	CHIEF ENGR.	APP'D
5	7/9/82	REPLACED 50 RELAYS (2NOR 2SW, 2NOP 2SW, ADD 2 STOP CKT (ADD 2TB 2HA 4TA & R/O	CMR					
4	1/21/82	ADDED NOTE FOR CONFORMANCE TO 2 NOR 4 NOP 2 SW 1 NOP (DCP 80-082 REV. 00) TO CKT 2 (DCP 80-082 REV. 00) TO CKT 3 (DCP 80-082 REV. 00) REVISED TYPE 74A-20407 (FOR 5"-54-523)	CMR					
3	6/7/79	ISSUED AS BUILT; CSW TO INCORP TOR 3 (DCP 45-12 R6)	CMR					
2	9/21/78	REVISED TO INCORPORATE FCR-E-1032	C.M.					
1	7/24/78	ISSUED FOR CONSTRUCTION	D					

UNCONTROLLED DOCUMENT FOR REFERENCE ONLY

PENNSYLVANIA POWER & LIGHT COMPANY
ALLENTOWN, PENNSYLVANIA
SUSQUEHANNA STEAM ELECTRIC STATION – UNIT 1, UNIT 2

BECHTEL – SAN FRANCISCO

SCHEMATIC DIAGRAM CONTROL ROD DRIVE PUMP 1B UNIT 1

JOB No.	DRAWING No.	REV.
8856	E-169 SH 2	14

D-107318 SH 2

THIS DOCUMENT IS UNDER PP&L ADMINISTRATIVE CONTROL. NO CHANGES CAN BE MADE WITHOUT PRIOR PP&L APPROVAL.

EDWARD K. KANG — REGISTERED PROFESSIONAL ENGINEER — CALIFORNIA — No. 19328

24X

I certify that the microfilmed image contained on this microform were made in the normal and regular course of business. This is a true, full, correct and complete reproduction and replacement for and/or in lieu of original documents generated by the Bechtel group of companies.
Signed DANNY Date 3-23 Camera Type MRG 1
Camera Operator

PRC APERTURE CARD

Docket # 50-387
Control # 8303220117 -152
Date 3/10/83 of Document:
REGULATORY DOCKET FILE

D

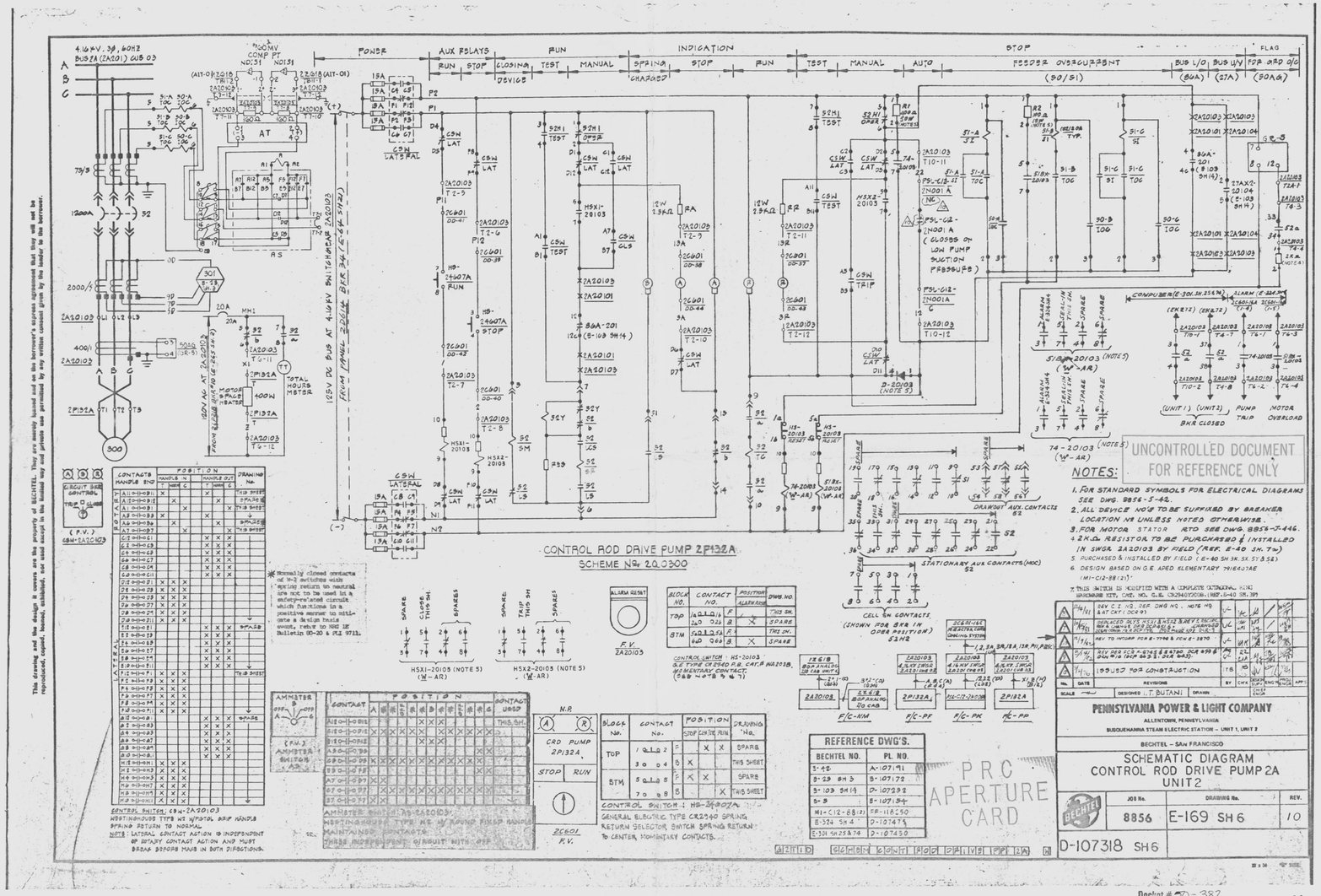

24 X

I certify that the microfilmed image contained on this microform were made in the normal and regular course of business. This is a true, full, correct and complete reproduction and replacement for and/or in lieu of original documents generated by the Bechtel group of companies.

Signed _____ Date _____ Camera Type _____
Camera Operator

Docket # 50-387
Control # 8303220117-153
Date 3/10/83 of Document:
REGULATORY DOCKET FILE

D

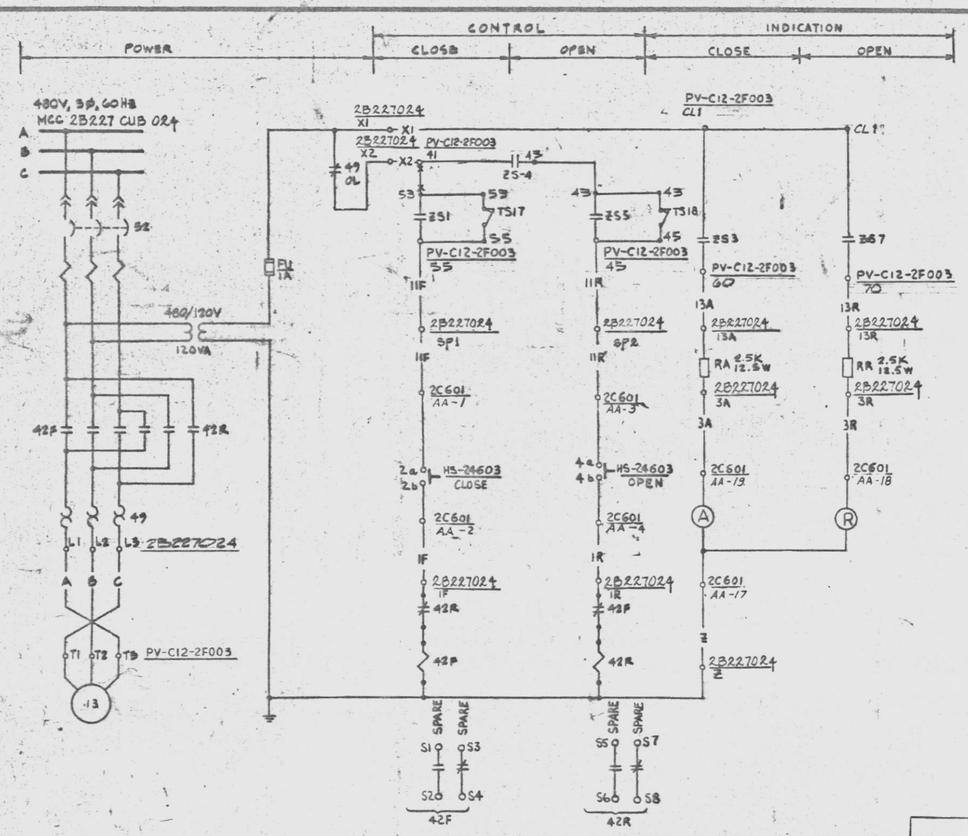

DRIVE WATER PRESSURE THROTTLING VALVE-PV-C12-2F003

SCHEME 2Q0302
(REF. SH.2)

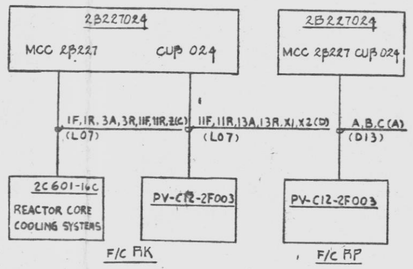

REFERENCE DWG'S.	
BECHTEL NO.	PL. NO.
E-42	A107191
MI-C12-88	FF-118250

2C601
F.V.

BLOCK No.	CONTACT No.		POSITION CLOSE	NORM	OPEN	DRAWING No.
TOP	1a 1b	F		X	X	SPARE
	2a 2b	B	X			THIS SHEET
BTM	3a 3b	F	X	X	-	SPARE
	4a 4b	B			X	THIS SHEET

CONTROL SWITCH: HS-24603.
GENERAL ELECTRIC TYPE CR2940
MOMENTARY CONTACTS WITH SPRING RETURN TO NORMAL

VALVE LIMIT SWITCH DEVELOPMENT					
CONTACTS		100% OPEN	INTERMEDIATE	100% CLOSED	CONTACT USED
ZS-1	530—1—055	———			THIS SHEET
ZS-2	0—1—0	———			SPARE
ZS-3	500—1—0CLS		———	———	THIS SHEET
ZS-4	410—1—043		———	———	THIS SHEET
ZS-5	430—1—045			———	THIS SHEET
ZS-6	0—1—0			———	SPARE
ZS-7	CLS—1—070	———	———		THIS SHEET
ZS-8	0—1—0	———	———		SPARE
TS-17	53—0—55	OPEN ON HIGH CLOSING TORQUE			THIS SHEET
TS-18	45—0—43	OPEN ON HIGH OPENING TORQUE			THIS SHEET
———	CONTACT CLOSED				

PV-C12-2F003

NOTES

1. ALL DEVICE NO.'S TO BE SUFFIXED BY STARTER LOCATION NO. UNLESS NOTED OTHERWISE.
2. FOR STANDARD SYMBOLS FOR ELECTRICAL DIAGRAMS SEE DWG. E-42.
3. DESIGN BASED ON G.E. APED ELEMENTARY DIAGRAM DWG # 791E407AE (MI-C12-88)
4. FOR SPACE HEATER POWER SUPPLY, SEE E-241, SH. 14.

PRC APERTURE CARD

Docket # 50-387
Control # 8303220117-154
Date 3/10/83 of Document:
REGULATORY DOCKET FILE

No.	DATE	REVISIONS	BY	CHKD	DESIGN ENGR	ENGR	PROJ ENGR	APPD
4	5/31/82	REVISED TO ADD NOTE 4, (DCR 42)	[illegible]	[illegible]	[illegible]	[illegible]	[illegible]	[illegible]
3	4/5/82	REVISED TERMINATIONS (DCR # 9)	[illegible]	[illegible]	[illegible]	[illegible]	[illegible]	[illegible]
2	12/4/81	REVISED TERM. NO. (DCR-42)	DG	JH	[illegible]	[illegible]	[illegible]	[illegible]
1	3/17/78	DELETED PV-C12-2F005 PER P&ID M2146 & REVISED MCC NO.	MPS	C.H.	[illegible]	[illegible]	[illegible]	[illegible]
0	4/4/77	ISSUED FOR CONSTRUCTION.	C.H.	[illegible]	[illegible]	[illegible]	[illegible]	[illegible]

SCALE NONE | DESIGNED CHENG HOU | DRAWN J. L. B.

PENNSYLVANIA POWER & LIGHT COMPANY
ALLENTOWN, PENNSYLVANIA
SUSQUEHANNA STEAM ELECTRIC STATION – UNIT 1, UNIT 2

BECHTEL – SAN FRANCISCO

SCHEMATIC DIAGRAM
CONTROL ROD DRIVE HYDRAULIC SYS.
PRESSURE THROTTLING VALVES UNIT 2

JOB No.	DRAWING No.	REV.
8856	E-169 SH 9	4

D-107318 SH 9

UNCONTROLLED DOCUMENT FOR REFERENCE ONLY

G2T10 SCHEM CRD PRESS CONT VLVES

22 x 34

This drawing and the design it covers are the property of BECHTEL. They are merely loaned and on the borrower's express agreement that they will not be reproduced, copied, loaned, exhibited, nor used except in the limited way and private use permitted by any written consent given by the lender to the borrower.

24X

I certify that the microfilmed image contained on this microform were made in the normal and regular course of business. This is a true, full, correct and complete reproduction and replacement for and/or in lieu of original documents generated by the Bechtel group of companies.

Signature RHEY Date 4-12-82 Camera Type MRG-1
Camera Operator

D

This drawing and the design it covers are the property of BECHTEL. They are merely loaned and on the borrower's express agreement that they will not be reproduced, copied, loaned, exhibited, nor used except in the limited way and private use permitted by any written consent given by the lender to the borrower.

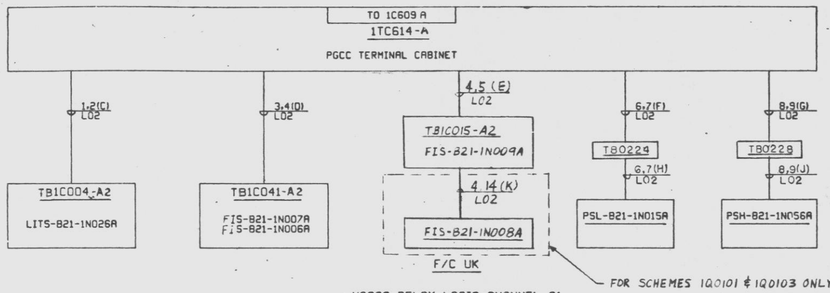

NSSSS RELAY LOGIC CHANNEL A1
SCHEME NO. 1Q0101
REF. SH. 7 & 8 — A1

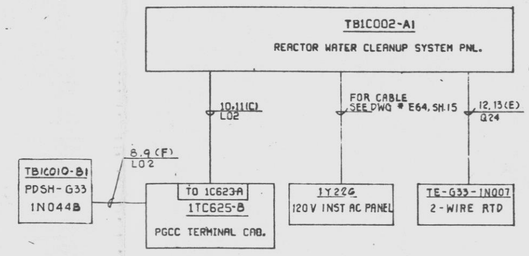

REACTOR WATER CLEANUP OUTBOARD ISOLATION LOGIC
SCHEME NO. 1Q0105 — II
REF. SH. 9 & 6

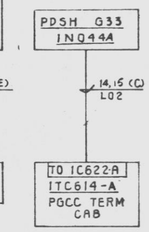

REACTOR WTR CLEANUP INBOARD ISOLATION LOGIC
SCHEME NO. 1Q0124 — I
REF. SH. 9 & 6

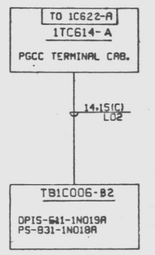

RHR INBOARD ISOLATION LOGIC
SCHEME NO. 1Q0106
REF. SH. 10 — I

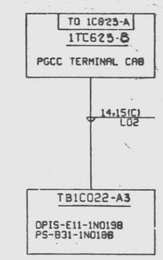

RHR OUTBOARD ISOLATION LOGIC
SCHEME NO. 1Q0107
REF. SH. 10 — II

F/C	SCHEME NO.	RPS CHAN.	PANEL	PANEL		PANEL		LOCAL	LOCAL	RELAY PANEL	PGCC TERM CAB	LOCAL
			LITS	FIS	FIS	FIS	FIS	PSL/TB	PSH/TB			
UK	1Q0101	A1	TBIC004-A2	TBIC041-A2		TBIC015-A2		B21-1N015A	B21-1N056A	1C609-A	1TC614-A	FIS-B21-1N008A
			B21-1N026A	B21-1N007A	B21-1N006A	—	B21-1N009A	TB0224	TB0228			
VK	1Q0102	A2	TBIC005-A1	TBIC042-A1		TBIC025-A1		B21-1N015C	B21-1N056C	1C609-B	1TC614-D	—
			B21-1N026C	B21-1N007C	B21-1N006C	B21-1N008C	B21-1N009C	TB0225	TB0229			
XK	1Q0103	B1	TBIC004-B2	TBIC041-B2		TBIC015-B2		B21-1N015B	B21-1N056B	1C611-A	1TC624-E	FIS-B21-1N008B
			B21-1N026B	B21-1N007B	B21-1N006B	—	B21-1N009B	TB0226	TB0731			
YK	1Q0104	B2	TBIC005-B1	TBIC042-B1		TBIC025-B1		B21-1N015D	B21-1N056D	1C611-B	1TC624D	—
			B21-1N026D	B21-1N007D	B21-1N006D	B21-1N008D	B21-1N009D	TB0227	TB0732			

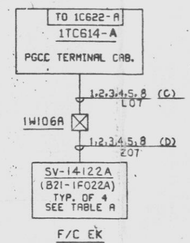

MSIV INBOARD SV-14122A (B21-1F022A)
SCHEME NO. 1Q0110
REF. SH. 6 & 12 — I

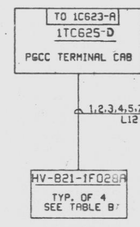

MAIN STEAM OUTBOARD ISOLATION VLV HV-B21-1F028A
SCHEME NO. 1Q0114
REF. SH. 6 & 13 — II

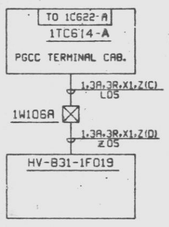

REACTOR WATER SAMPLE VLV HV-B31-1F019
SCHEME NO. 1Q0108
REF. SH. 11 — I

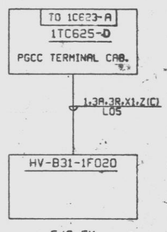

REACTOR WATER SAMPLE VLV HV-B31-1F020
SCHEME NO. 1Q0109
REF. SH. 11 — II

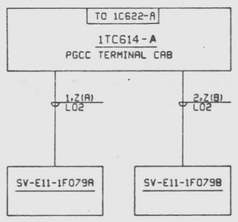

RHR SAMPLE LINE VLVS SV-E11-1F079A & B INBOARD ISOL.
SCHEME NO. 1Q0118
REF. SH. 15 — I

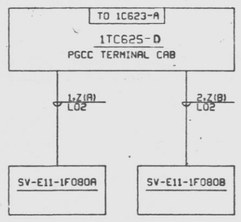

RHR SAMPLE LINE VLVS SV-E11-1F080 A & B OUTBOARD ISOL.
SCHEME NO. 1Q0119
REF. SH. 15 — II

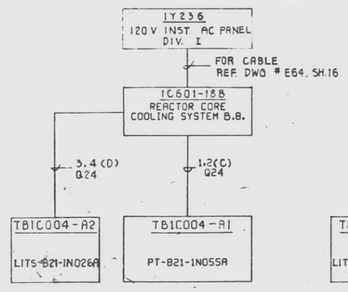

POST ACCIDENT MONITORING - "A" SYSTEM
SCHEME NO. 1Q0120
REF. SH 6 & 16 — I

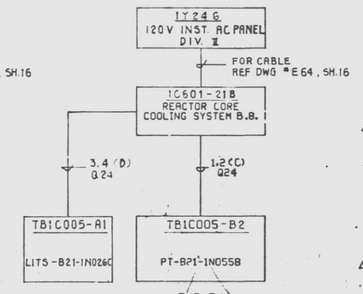

POST ACCIDENT MONITORING - "B" SYSTEM
SCHEME NO. 1Q0121
REF. SH. 6 & 16 — II

VALVE LIMIT SWITCH DEVELOPEMENT

SWITCH	CONTACT	% OPEN 0 TO 10	% OPEN 10 TO 90	% OPEN 90 TO 100	CONTACT USED
OPEN (UPPER)	ZS-1	7 O11			
	ZS-2	O12			E-170 SH.7
	ZS-3	9 O09			E-301 SH 101
	ZS-4	8 O10			
CLOSE (LOWER)	ZS-5	O17			
	ZS-6	13 O18			E-157 SH.2
	ZS-7	O15			
	ZS-8	14 O16			E-157 SH.2
OPEN (UPPER)	ZS-9	O23			
	ZS-10	19 O24			E 170 SH.7
	ZS-11	O21			
	ZS-12	20 O22			DCS COMPUT REF SH 100
CLOSE (LOWER)	ZS-13	O35			E-181 SH 5
	ZS-14	31 O36			
	ZS-15	O33			SPARE
	ZS-16	32 O34			SPARE

HV-B21-1F028A, B, C, & D
HV-B21-1F022A, B, C, & D (REF. DWG MI-B21-4)
* THESE SWITCHES ARE FOR VLV HV-B21-1F022A, B, C & D ONLY

VALVE LIMIT SWITCH DEVELOPMENT

SWITCH	CONTACT	100% OPEN	INTERMEDIATE	100% CLOSED	CONTACT USED
OPEN (UPPER)	ZS-1 A-1-B				CLOSE IND.
	ZS-2 C-1-D				SPARE
	ZS-3 E-1-F				SPARE
	ZS-4 G-1-H				SPARE
CLOSE (LOWER)	ZS-5 A-1-B				SPARE
	ZS-6 C-1-D				OPEN IND.
	ZS-7 E-1-F				SPARE
	ZS-8 G-1-H				SPARE

CONTACT CLOSED

HV-B31-1F019, HV-B31-1F020

TABLE A			
SCHEME NO	VALVE	TERM.CAB	CMPTR PT (E301-101)
1Q0110	SV-14122A (B21-1F022A)	1TC614-A	NVZ01
1Q0111	SV-14122B (B21-1F022B)		NVZ02
1Q0112	SV-14122C (B21-1F022C)		NVZ03
1Q0113	SV-14122D (B21-1F022D)	↓	NVZ04*

FOR WIRING DIAGRAM SEE SH 12

TABLE B			
SCHEME NO.	VALVE	TERM CAB	CMPTR PT (E301-101)
1Q0114	HV-B21-1F028A	1TC625D	NVZ05
1Q0115	HV-B21-1F028B		NVZ06*
1Q0116	HV-B21-1F028C		NVZ07
1Q0117	HV-B21-1F028D	↓	NVZ08*

FOR WIRING DIAGRAM SEE SH.13

PRC APERTURE CARD

Docket #50-387
Control #8309220117-5
Date 3/10/83 of Document:
REGULATORY DOCKET FILE

THIS DOCUMENT IS UNDER PP&L ADMINISTRATIVE CONTROL. NO CHANGES CAN BE MADE WITHOUT PRIOR PP&L APPROVAL.

NOTES:
1. FOR STANDARD SYMBOLS FOR ELECTRICAL DWG SEE E-42.
2. DESIGN BASED ON GE-APED ELEMENTARY 731E401WJ (V/P-8856-MI-B21-131).
3. SEPARATION IN ACCORDANCE WITH GE-APED SYSTEM DESIGN-SYSTEM DESIGN SPECIFICATION 22A3052 REV.2 (A21-4050).
4. FIELD TO GROUND CONDUITS FOR SCHEMES 1Q0101, 1Q0102, 1Q0103 & 1Q0104 AT LEAST ONE PLACE (MIDDLE POINT OF CONDUIT) FOR A SHORT CKT CURRENT RETURN.

No.	DATE	REVISIONS	BY	CHK	SUPV ENGR	PROJ ENGR	APPD
10	3/8/83	REVISED TO INCORP ECN #3210 & DCP 659-1E RE ISSUED "AS BUILT"	RM	MJS	TC	/	RM
9	7/1/82	ISSUED "AS BUILT" INCORP ECN-E-3259	CIN	MJS	RM	/	RM
8	2/24/82	INCORPORATED PER E-5806	MS	MJS	TC	/	RM
7	1/11/82	PDSHG33/1N044A IS LOCAL, PDSHG33-1N044B IS IN TBIC010 PER SFR 1318	EK	MJS	/	/	/
6	12/21/81	INCORP DCN #1 (DCR 42)	/	/	/	/	/
5	7/1/75	ISSUED FOR CONSTRUCTION	W	A.K.K.	/	/	/

SCALE NONE | DESIGNED R. VAUSE | DRAWN | CHIEF ENGR

PENNSYLVANIA POWER & LIGHT COMPANY
ALLENTOWN, PENNSYLVANIA
SUSQUEHANNA STEAM ELECTRIC STATION - UNIT 1, UNIT 2

BECHTEL - SAN FRANCISCO

BLOCK DIAGRAM
NUCLEAR STEAM SUPPLY SHUTOFF SYSTEM
ISOLATION LOGIC UNIT 1

JOB No.	DRAWING No.	REV.
8856	E-170 SH 1	10

D-107319 SH-1

REFERENCE DWG'S.	
BECHTEL NO:	PL NO.
E-42	A-107191
MI-B21-131	FF-114510
E-64	A-107213
E-157	D107306
E-301	D107450
MI-B21-4	FF-114510

UNCONTROLLED DOCUMENT FOR REFERENCE ONLY

EDWARD K. KANG — COMMONWEALTH OF PENNSYLVANIA — REGISTERED PROFESSIONAL ENGINEER

G1L20 | BLK DIAG NSSSS ISO LOGIC | M

24X

I certify that the microfilmed image contained on this microform was made in the normal and regular course of business. This is a true, full, correct and complete reproduction and replacement for and/or in lieu of original documents prepared by the Bechtel group of companies.
DANNY 8-13-82 MRG 1

D

This drawing and the design it covers are the property of BECHTEL. They are merely loaned and on the borrower's express agreement that they will not be reproduced, copied, loaned, exhibited, nor used except in the limited way and private use permitted by any written consent given by the lender to the borrower.

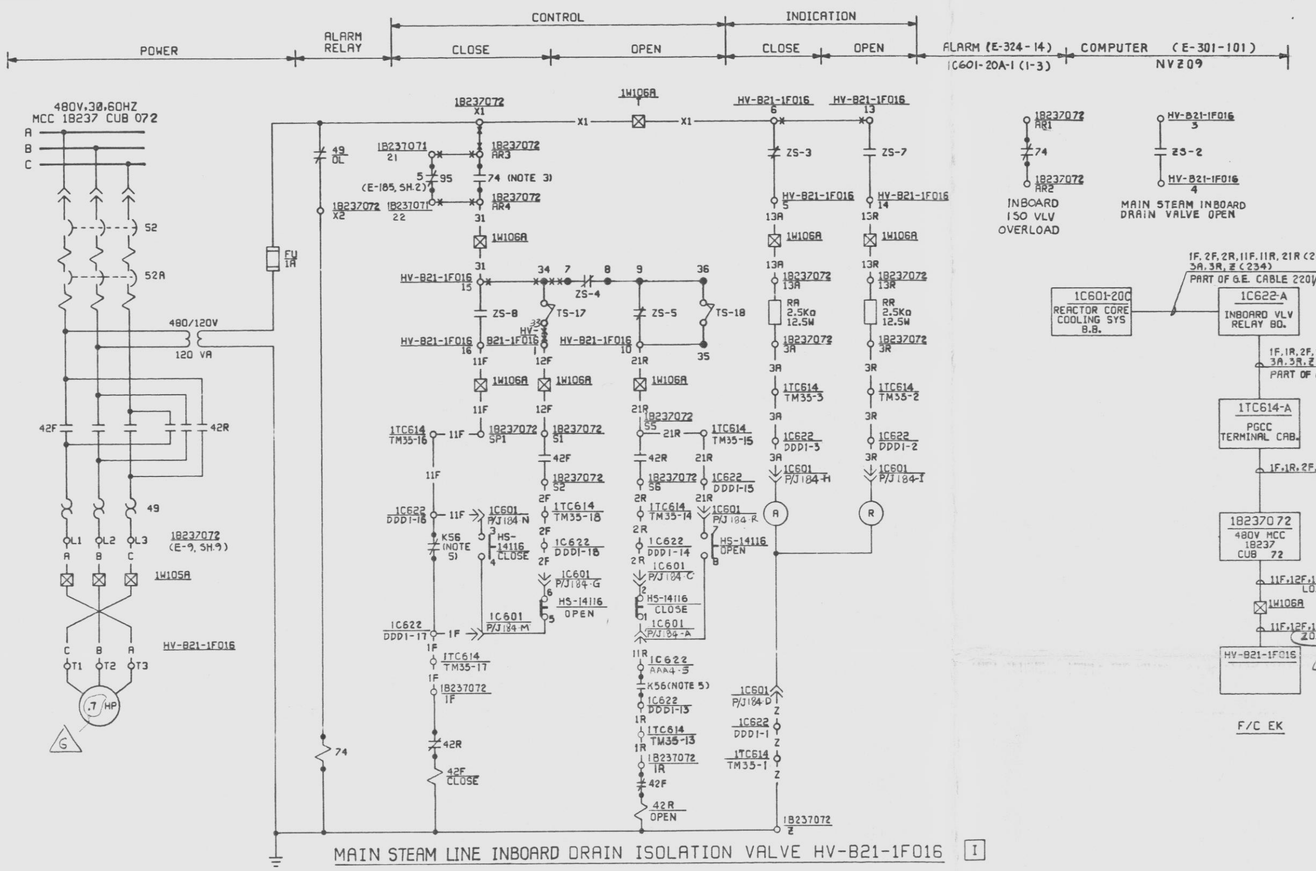

MAIN STEAM LINE INBOARD DRAIN ISOLATION VALVE HV-B21-1F016 [I]

SCHEME 1Q0122

REF. SH. 14

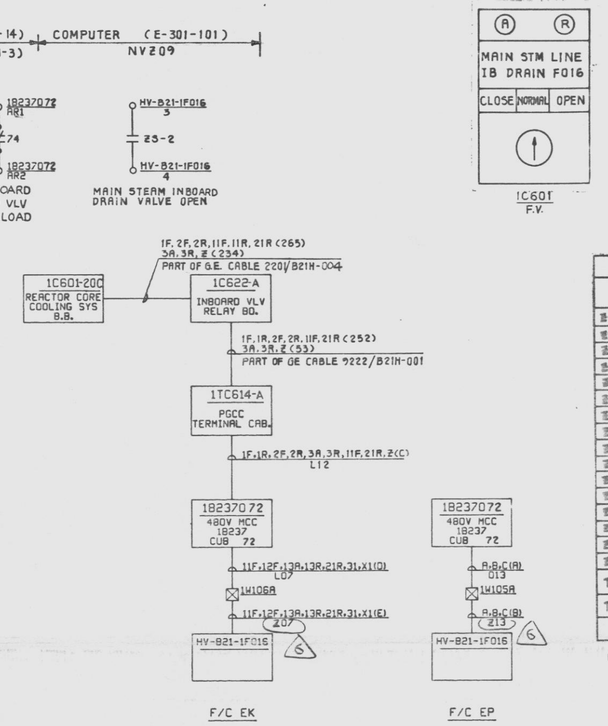

BLOCK NO.		CONTACT NO.		POSITION CLOSE	POSITION NORMAL	POSITION OPEN	DRAWING NO.
CLOSE	TOP	1 2 / 3 4	F		X	X	THIS SH.
			B	X			THIS SH.
OPEN	BTM	5 6 / 7 8	F	X	X		THIS SH.
			B			X	THIS SH.

CONTROL SWITCH# HS-14116
GENERAL ELECTRIC TYPE CR2940
KEYLOCK SELECTOR SWITCH
KEY REMOVABLE IN "NORMAL" POSITION.
SPRING RETURN TO "NORMAL".

VALVE LIMIT SWITCH DEVELOPMENT

CONTACTS		100% OPEN	INTERMEDIATE	100% CLOSED	CONTACT USED
ZS-1	1 o—| o 2				SPARE
ZS-2	3 o—| o 4				E-301-101
ZS-3	5 o—| o 6				THIS SH.
ZS-4	7 o—| o 8				THIS SH.
ZS-5	9 o—| o 10				THIS SH.
ZS-6	11 o—| o 12				SPARE
ZS-7	13 o—| o 14				THIS SH.
ZS-8	15 o—| o 16				THIS SH.
ZS-9	17 o—| o 18				SPARE
ZS-10	19 o—| o 20				SPARE
ZS-11	21 o—| o 22				SPARE
ZS-12	23 o—| o 24				SPARE
ZS-13	25 o—| o 26				SPARE
ZS-14	27 o—| o 28				SPARE
ZS-15	29 o—| o 30				SPARE
ZS-16	31 o—| o 32				SPARE
TS-17	33 o—| o 34				OPEN ON HIGH CLOSING TORQUE	THIS SH.
TS-18	35 o—| o 36				OPEN ON HIGH OPENING TORQUE	THIS SH.

CONTACT CLOSED

HV-B21-1F016

NOTES:

1. FOR STANDARD SYMBOLS FOR ELECTRICAL DWGS. SEE E-42. FOR SPACE HTR SEE DWG. E-241
2. ALL DEVICE NUMBERS TO BE SUFFIXED BY STARTER LOCATION NUMBER UNLESS OTHERWISE NOTED.
3. CONVERT TO NORMALLY OPEN CONTACTS IN FIELD.
4. DESIGN BASED ON GE-APED ELEMENTARY 791E401WJ (V/P-8856-M1-B21-131)
5. RELAY K56 DE-ENERGIZED ON NS4 ISOLATION SIGNAL.
6. FOR SPACE HEATER SEE E-241 SH.5

PRC APERTURE CARD
THIS DOCUMENT IS UNDER PP&L ADMINISTRATIVE CONTROL. NO CHANGES CAN BE MADE WITHOUT PRIOR PP&L APPROVAL.

REFERENCE DWG'S.	
BECHTEL NO.	PL. NO.
E-42	A-107191
M1-B21-131	FF-114510
E-185	D-107334
E-241	D-107390
E-301	D-107450
E-324	D-107473
E-9	E-107158
	156

No.	DATE	REVISIONS	BY	CHK'D	DESIGN SUPV.	ENGR.	PROJ. ENGR.	APP'D
1	1/11/82	REV'D PER DCN#1 & REV'D PER DCP 538,1E REV. 1	KJB TFY	TC				
2	6/14/82	REV. TO INCORP DCN#1 (DCP 538)	KJB	BS				
3	9/7/82	ISSUED "AS BUILT" INCORP F.N. E-3260. REVISED AS SHOWN	MPS	CJN				
4	1/5/82	REVD. TO INCORP DCN-E-[illegible] AND DELETED DCP 538,1B REV 1 PER [illegible]	CJN	TC				
5	9/5/75	ISSUED FOR CONSTRUCTION	JW M.T.	CHK				

SCALE NONE | DESIGNED R. VAUSE | DRAWN | CHIEF ENGR

PENNSYLVANIA POWER & LIGHT COMPANY
ALLENTOWN, PENNSYLVANIA
SUSQUEHANNA STEAM ELECTRIC STATION - UNIT 1, UNIT 2

BECHTEL - SAN FRANCISCO

SCHEMATIC DIAGRAM
NSSSS-MAIN STM LINE DRAIN ISOLATION VALVE. UNIT 1

JOB No.	DRAWING No.	REV.
8856	E-170 SH 2	6

D-107319 SH 2

Docket # 50-322
Control # 8303220117
Date 3/10/83 of Document:
REGULATORY DOCKET FILE

UNCONTROLLED DOCUMENT FOR REFERENCE ONLY

COMMONWEALTH OF PENNSYLVANIA REGISTERED PROFESSIONAL EDWARD K. KANG ENGINEER 17538-E
9/5/75

G|1|2|0 SCHEM NSSSS MS LN DRN VLV M

22 x 34 "D" SIZE

24X
I certify that the microfilmed image contained on this microform were made in the normal and regular course of business. This is a true, full, correct and complete reproduction and replacement for and/or in lieu of original documents generated by the Bechtel group of companies.
Signed JACINTO Camera Operator Date 6-17-82 Camera Type MRG I

D

This drawing and the design it covers are the property of BECHTEL. They are merely loaned and on the borrower's express agreement that they will not be reproduced, copied, loaned, exhibited, nor used except in the limited way and private use permitted by any written consent given by the lender to the borrower.

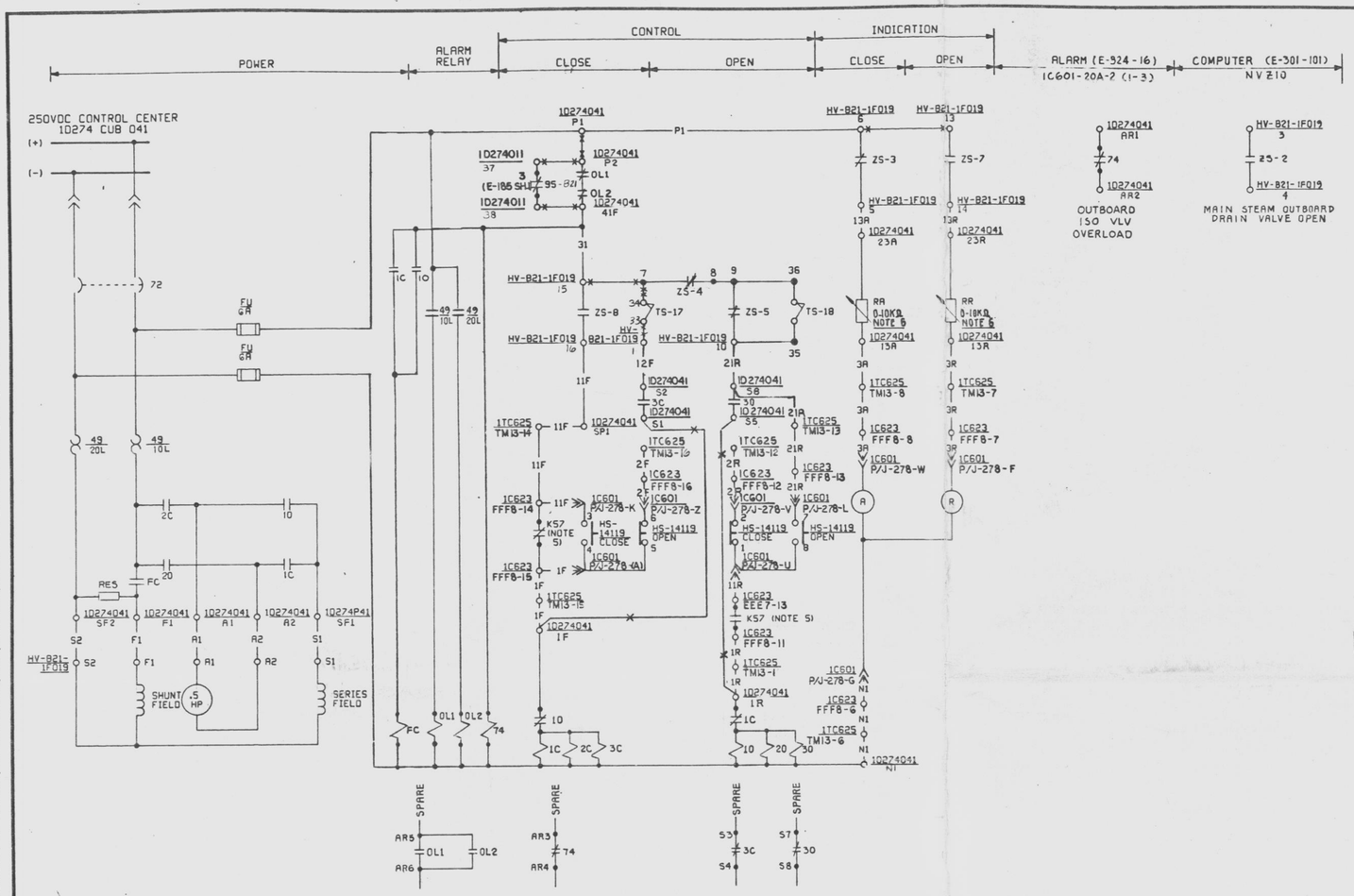

MAIN STEAM LINE OUTBOARD DRAIN ISOLATION VALVE HV-B21-1F019 II

SCHEME 1Q0123
REF. SH 14

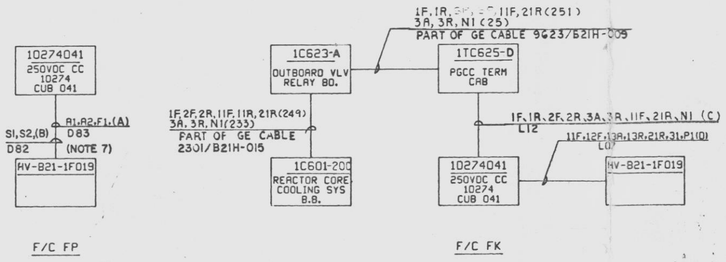

BLOCK NO.	CONTACT NO.		POSITION CLOSE	POSITION NORMAL	POSITION OPEN	DRAWING NO.
CLOSE	TOP	F		X	X	THIS SH.
		B	X			THIS SH.
OPEN	BTM	F	X	X		THIS SH.
		B			X	THIS SH

1C601 FV

CONTROL SWITCH# HS-14119
GENERAL ELECTRIC TYPE CR2940
KEYLOCK SELECTOR SWITCH
KEY REMOVABLE IN "NORMAL" POSITION.
SPRING RETURN TO "NORMAL".

VALVE LIMIT SWITCH DEVELOPMENT

CONTACTS	100% OPEN	INTERMEDIATE	100% CLOSED	CONTACT USED
ZS-1	1 0—|—0 2			SPARE
ZS-2	3 0—|—0 4			E-301-101
ZS-3	5 0—|—0 6			THIS SH.
ZS-4	7 0—|—0 8			THIS SH.
ZS-5	9 0—|—0 10			THIS SH.
ZS-6	11 0—|—0 12			SPARE
ZS-7	13 0—|—0 14			THIS SH.
ZS-8	15 0—|—0 16			THIS SH.
ZS-9	17 0—|—0 18			SPARE
ZS-10	19 0—|—0 20			SPARE
ZS-11	21 0—|—0 22			SPARE
ZS-12	23 0—|—0 24			SPARE
ZS-13	25 0—|—0 26			SPARE
ZS-14	27 0—|—0 28			SPARE
ZS-15	29 0—|—0 30			SPARE
ZS-16	31 0—|—0 32			SPARE
TS-17	33 0—|—0 34			OPEN ON HIGH CLOSING TORQUE THIS SH.
TS-18	35 0—|—0 36			OPEN ON HIGH OPENING TORQUE THIS SH.

—— CONTACT CLOSED

HV-B21-1F019

PRC APERTURE CARD

NOTES:

6. FIELD TO REPLACE WITH 0-10 KOHM VARIABLE RESISTORS AND ADJUST TO 24V ACROSS THE LIGHT CIRCUIT.
7. TERMINATE CABLES AT TERMINAL BOX WITH VALVE LOCATION NUMBER PER CONNECT. LIST E-379-10.

THIS DOCUMENT IS UNDER PP&L ADMINISTRATIVE CONTROL. NO CHANGES CAN BE MADE WITHOUT PRIOR PP&L APPROVAL.

1. FOR STANDARD SYMBOLS FOR ELECTRICAL DWGS. SEE E-42.
2. ALL DEVICE NUMBERS TO BE SUFFIXED BY STARTER LOCATION NUMBER UNLESS OTHERWISE NOTED.
3. FOR SPACE HTR SEE DWG. E-241
4. DESIGN BASED ON GE-APED ELEMENTARY 791E401WJTV/P-8856-M1-821-131) & 205B7921 (V/P-8856-E121-20(3)).
5. RELAY K57 DE-ENERGIZED ON NS4 ISOLATION SIGNAL.

REFERENCE DWG'S.	
BECHTEL NO.	PL. NO.
E-42	A-107191
M1-821-131	FF-114510
E-185	D-107334
E-301	D-107450
E-324	D-107473
E-241	D-107390

NO.	DATE	REVISIONS	BY	CH'K	DESIGN SUPV.	ENG'R	PROJ ENGR	APP'S
5	7/29/82	RE-ISSUED "AS BUILT" REVISED TO INCORP IDCN #3 (DCP 411-3, R/O)	V A	P 3	TT 8.11			
4	6/19/82	ISSUED "AS BUILT" REV'D MOTOR WP AS BUILT (DCR 42)	VA	FMH				
3	9/1/81	REISSUED AS A ISSUED FOR DOCUMENTATION IDCN #2 (DCP 4-110 R&S) WAS INCORP IN EWD	RR					
2	7/15/81	ISSUED FOR CONSTRUCTION	LW	M.T.				

SCALE NONE | DESIGNED A. VAUSE | DRAWN | CHIEF ENGR

PENNSYLVANIA POWER & LIGHT COMPANY
ALLENTOWN, PENNSYLVANIA
SUSQUEHANNA STEAM ELECTRIC STATION – UNIT 1, UNIT 2

BECHTEL – SAN FRANCISCO

SCHEMATIC DIAGRAM NSSSS - MAIN STM LINE ISOLATION VALVE UNIT 1

JOB No.	DRAWING No.	REV.
8856	E-170 SH 3	11

D-107319 SH 3

Docket # 50-387
Control # 8303220117 157
Date 3/10/83 of Document:
REGULATORY DOCKET FILE

UNCONTROLLED DOCUMENT FOR REFERENCE ONLY

COMMONWEALTH OF PENNSYLVANIA REGISTERED PROFESSIONAL EDWARD K. KANG ENGINEER 17538-E

G I L 2 0 S C H E M N S S S S M S L N O R N V L V M

I certify that the microfilmed image contained on this microform was made in the normal and regular course of business. This is a true, full, correct and complete reproduction and replacement for and/or in lieu of original documents generated by the Bechtel group of companies.
Camera Operator DANNY Date 8-25-82 MRG 1
24X

D

This drawing and the design it covers are the property of BECHTEL. They are merely loaned and on the borrower's express agreement that they will not be reproduced, copied, loaned, exhibited, or used except in the limited way and private use permitted by and within consent given by the lender to the borrower.

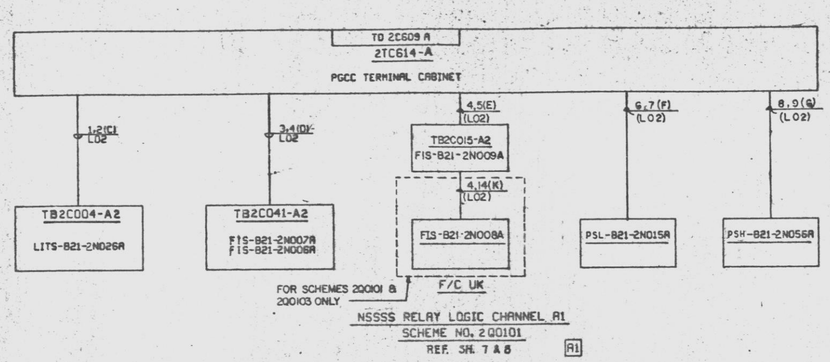

NSSSS RELAY LOGIC CHANNEL A1
SCHEME NO. 2Q0101
REF. SH. 7 & 8 [A1]

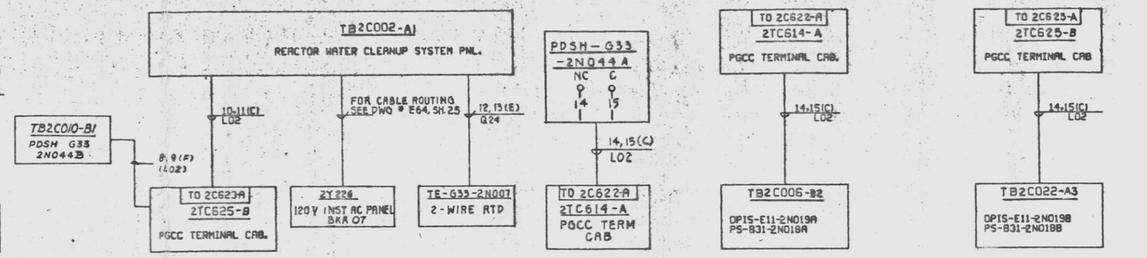

REACTOR WATER CLEANUP OUTBOARD ISOLATION LOGIC
SCHEME NO 2Q0105 [II]
REF. SH. 9 & 6

REACTOR WTR CLEANUP INBOARD ISOLATION LOGIC
SCHEME NO. 2Q0124 [I]
REF. SH. 9

RHR INBOARD ISOLATION LOGIC
SCHEME NO. 2Q0106 [I]
REF. SH. 10

RHR OUTBOARD ISOLATION LOGIC
SCHEME NO. 2Q0107 [II]
REF. SH. 10

F/C	SCHEME NO.	RPS CHAN.	PANEL LITS	PANEL FIS	PANEL FIS	PANEL FIS	PANEL FIS	LOCAL PSL	LOCAL PSH	RELAY PANEL	PGCC TERM CAB	LOCAL
UK	2Q0101	A1	TB2C004-A2	TB2C041-A2		TB2C015-A2		B21-2N015A	B21-2N056A	2C609-A	2TC614-A	FIS-B21-2N008A
			B21-2N026A	B21-2N007A	B21-2N008A		B21-2N009A					
VK	2Q0102	A2	TB2C005-A1	TB2C042-A1		TB2C025-A1		B21-2N015C	B21-2N056C	2C609-B	2TC614-D	
			B21-2N026C	B21-2N007C	B21-2N008C	B21-2N008C	B21-2N009C					
XK	2Q0103	B1	TB2C004-B2	TB2C041-B2		TB2C015-B2		B21-2N015B	B21-2N056B	2C611-A	2TC624-E	FIS-B21-2N008B
			B21-2N026B	B21-2N007B	B21-2N008B		B21-2N009B					
YK	2Q0104	B2	TB2C005-B1	TB2C042-B1		TB2C025-B1		B21-2N015D	B21-2N056D	2C611-B	2TC624-D	
			B21-2N026D	B21-2N007D	B21-2N008D	B21-2N008D	B21-2N009D					

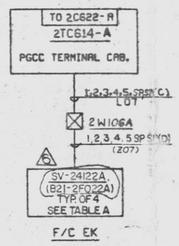

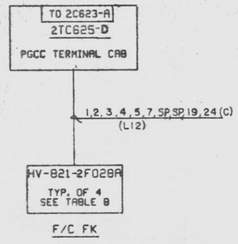

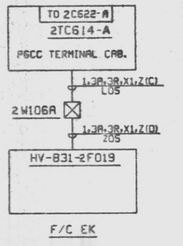

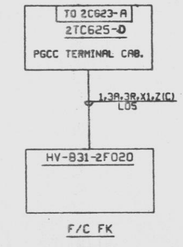

MAIN STEAM INBOARD ISOLATION VLV HV-821-2F028A
SCHEME NO. 2Q0110
REF. SH. 6 & 12 [I]

MAIN STEAM OUTBOARD ISOLATION VLV HV-821-2F028A
SCHEME NO. 2Q0114
REF. SH. 6 & 13 [II]

REACTOR WATER SAMPLE VLV HV-831-2F019
SCHEME NO. 2Q0108
REF. SH. 11 [I]

REACTOR WATER SAMPLE VLV HV-831-2F020
SCHEME NO. 2Q0109
REF. SH. 11 [II]

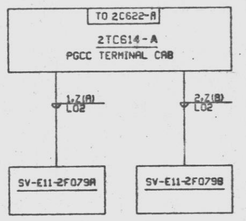

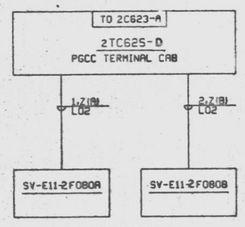

RHR SAMPLE LINE VLVS SV-E11-2F079A & B INBOARD ISOL.
SCHEME NO. 2Q0118
REF. SH. 15 [I]

RHR SAMPLE LINE VLVS SV-E11-2F080 A & B OUTBOARD ISOL.
SCHEME NO. 2Q0119
REF. SH. 15 [II]

TABLE A			
SCHEME NO.	Ⓐ VALVE	TERM. CAB.	CONT. DEV. DWG. NO.
2Q0110	SV-B21-2F022A	2TC614-A	NYE 07 (E-3031 Fn103)
2Q0111	SV-B21-2F022B		NYE 08 (E-3031 Fn103)
2Q0112	SV-B21-2F022C		NYE 09 (E-3031 Fn103)
2Q0113	SV-B21-2F022D		NYE 10 (E-3031 Fn103)

FOR WIRING DIAGRAM SEE SH. 12

TABLE B			
SCHEME NO.	VALVE	TERM CAB	CONT. DEV. DWG. NO.
2Q0114	HV-821-2F028A	2TC625D	NYE 09 (E-3031 Fn103)
2Q0115	HV-821-2F028B		NYE 08 (E-3031 Fn104)
2Q0116	HV-821-2F028C		NYE 07 (E-3031 Fn105)
2Q0117	HV-821-2F028D	↓	NYE 10 (E-3031 Fn106)

FOR WIRING DIAGRAM SEE SH. 13

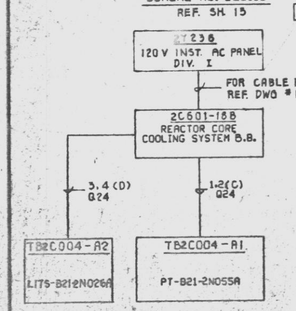

POST ACCIDENT MONITORING - "A" SYSTEM
SCHEME NO. 2Q0120
REF. SH. 6 & 16 [I]

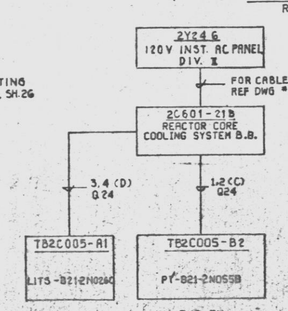

POST ACCIDENT MONITORING - "B" SYSTEM
SCHEME NO. 2Q0121
REF. SH. 6 & 16 [II]

VALVE LIMIT SWITCH DEVELOPMENT

CONTACT		% OPEN 0 TO 10	10 TO 90	90 TO 100	CONTACT USED
ZS-1	2	011			
ZS-2		012			E-170 SH. 8
ZS-3	8	09			E-301 SH. 103, 104
ZS-4		010			
ZS-5	13	017			
ZS-6		018			E-157 SH 5
ZS-7	14	015			
ZS-8		016			E-157 SH 5
ZS-9	19	023			
ZS-10		024			E-170 SH. 8
ZS-11	20	021			
ZS-12		022			
ZS-13	31	035			E-189 SH. 6
ZS-14		036			
ZS-15	32	033			
ZS-16		034			

CONTACT CLOSED

HV-821-2F022A, B, C & D
HV-821-2F028A, B, C & D (REF. DWG MI-821-4)
4 — THESE SWITCHES ARE FOR VLV. HV-821-2F022A, B, C & D ONLY

VALVE LIMIT SWITCH DEVELOPMENT

SWITCH	CONTACT	100% OPEN	INTERMEDIATE	100% CLOSED	CONTACT USED
OPEN (UPPER)	ES-1 A c-|-o B				CLOSE IND.
	ES-2 C c-|-o D				SPARE
	ES-3 E c-|-o F				SPARE
	ES-4 G c-|-o H				SPARE
CLOSE (LOWER)	ES-5 A c-|-o B				SPARE
	ES-6 C c-|-o D				OPEN IND.
	ES-7 E c-|-o F				SPARE
	ES-8 G c-|-o H				SPARE

CONTACT CLOSED

HV-831-2F019, HV-831-2F020

REFERENCE DWG'S.	
BECHTEL NO.	PL. NO.
E-42	A-107191
MI-821-101	FE-11410
E-64	A-107213
E-157	D107306
E-301	D107450

NOTES
1. FOR STANDARD SYMBOLS FOR ELECTRICAL DWGS SEE E-42.
2. DESIGN BASED ON GE-APED ELEMENTARY 791E430AE(V/P885G-MI-921-101).
3. SEPARATION IN ACCORDANCE WITH GE-APED SYSTEM DESIGN SPECIFICATION 22A3052 REV. 2(AGI-4050).
4. FIELD TO GROUND CONDUIT OF SCHEMES 2Q0101, 2Q0102, 2Q0103 & 2Q0104 AT LEAST ONE PLACE (MIDDLE POINT OF CONDUIT) FOR A SHORT CIRCUIT CURRENT RETURN.

No.	DATE	REVISIONS	BY	CHK'R	DESIGN SUPV.	ENG'R	PROJ. ENG'R	APP'D
A	5/6/82	INCORP. FCN: E-2843, FCR: E-7024.	YAK	GD				
A	11/30/81	REV. BLOCK DIAGRAM (DCR 42) & INCORP FCR E-5914 & 6942.	VK	JNL				
A	11/21/81	REVISED TO SHOW SCHEMATIC VALVE H.S. (DCR 42)	NG	TN				
A	7/14/81	INCORP FCN'S E-3287 & 3366, REV. PDSHG332N044A TO READ PDSHG332N044B (DCR 42)	VK	YAK				
A	9/5/79	ISSUED FOR CONSTRUCTION	C.H	C.H				

SCALE — DESIGNED C.S. HOU DRAWN P. SANTOS CHK'R ENGR.

PENNSYLVANIA POWER & LIGHT COMPANY
ALLENTOWN, PENNSYLVANIA
SUSQUEHANNA STEAM ELECTRIC STATION — UNIT 1, UNIT 2

BECHTEL — SAN FRANCISCO

BLOCK DIAGRAM
NUCLEAR STEAM SUPPLY SHUTOFF SYSTEM ISOLATION LOGIC UNIT 2

JOB No.	DRAWING No.	REV.
8856	E-170 SH 4	6

D-107319 SH 4

PRC APERTURE CARD
Docket # 50-387
Control # 8303220117-18
Date 3/10/83 of Document:
REGULATORY DOCKET FILE
UNCONTROLLED DOCUMENT FOR REFERENCE ONLY

24X
I certify that the microfilmed image contained on this microform were made in the normal and regular course of business. This is a true, full, correct and complete reproduction and replacement for and/or in lieu of original documents owned by the Bechtel Power Corporation.
P.C. AKINS 12-2-82 MRG 1
Camera Operator Date Camera Type

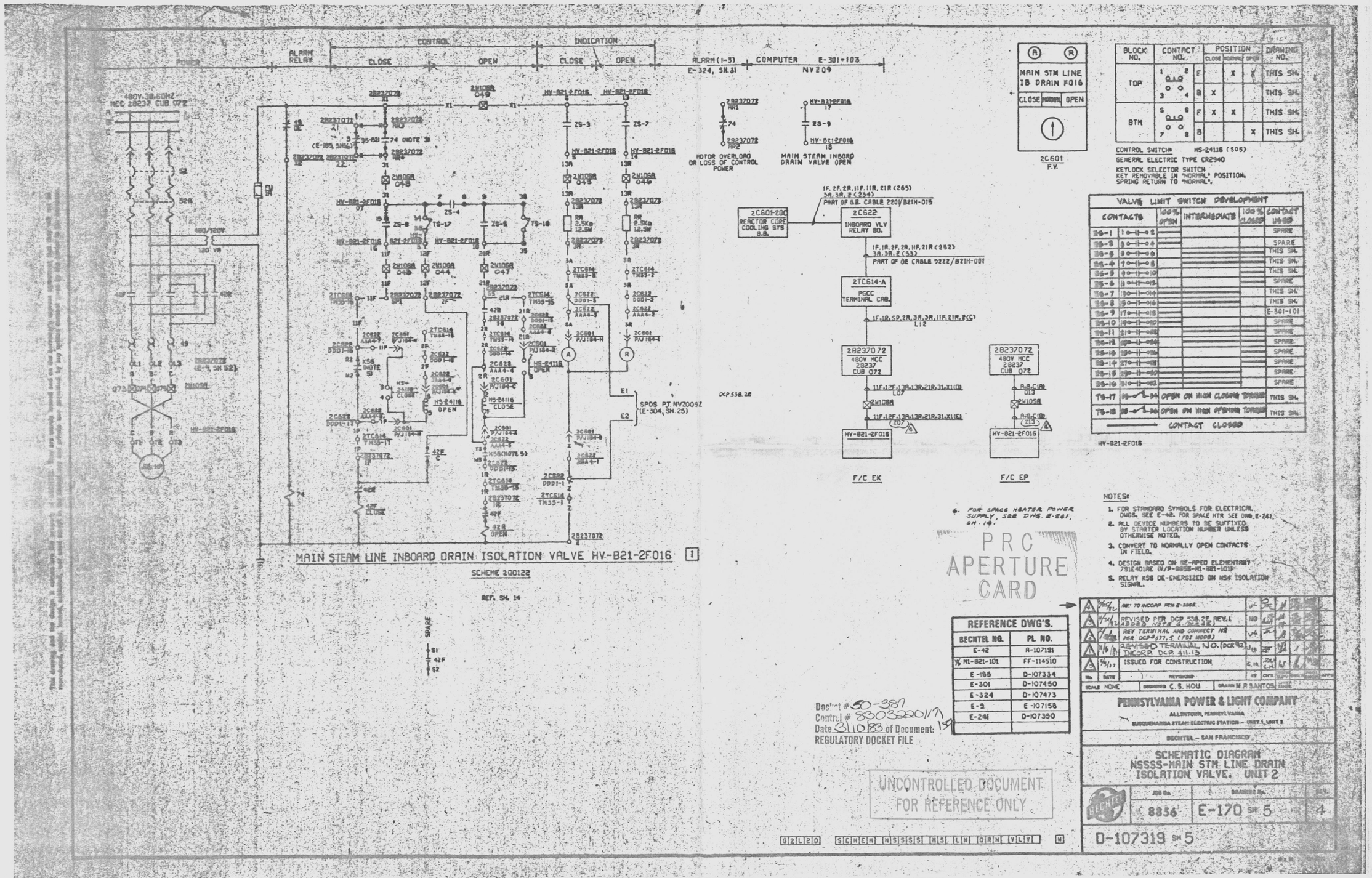

BLOCK NO.	CONTACT NO.		POSITION CLOSE	NORMAL	OPEN	DRAWING NO.
TOP	1 2 3 4	E		X	X	THIS SH.
		B	X			THIS SH.
BTM	5 6 7 8	F	X	X		THIS SH.
		B			X	THIS SH.

CONTROL SWITCH# HS-24116 (505)
GENERAL ELECTRIC TYPE CR2940
KEYLOCK SELECTOR SWITCH
KEY REMOVABLE IN "NORMAL" POSITION.
SPRING RETURN TO "NORMAL".

VALVE LIMIT SWITCH DEVELOPMENT

CONTACTS	100% OPEN	INTERMEDIATE	100% CLOSED	CONTACT USED
ZS-1	1 o—o 2			SPARE
ZS-2	3 o—o 4			SPARE
ZS-3	5 o—o 6			THIS SH.
ZS-4	7 o—o 8			THIS SH.
ZS-5	9 o—o 10			THIS SH.
ZS-6	11 o—o 12			SPARE
ZS-7	13 o—o 14			THIS SH.
ZS-8	15 o—o 16			THIS SH.
ZS-9	17 o—o 18			E-301-101
ZS-10	19 o—o 20			SPARE
ZS-11	21 o—o 22			SPARE
ZS-12	23 o—o 24			SPARE
ZS-13	25 o—o 26			SPARE
ZS-14	27 o—o 28			SPARE
ZS-15	29 o—o 30			SPARE
ZS-16	31 o—o 32			SPARE
TS-17	33 o—o 34	OPEN ON HIGH CLOSING TORQUE		THIS SH.
TS-18	35 o—o 36	OPEN ON HIGH OPENING TORQUE		THIS SH.

CONTACT CLOSED

HV-821-2F016

NOTES:
1. FOR STANDARD SYMBOLS FOR ELECTRICAL DWGS. SEE E-42. FOR SPACE HTR SEE DWG. E-241.
2. ALL DEVICE NUMBERS TO BE SUFFIXED BY STARTER LOCATION NUMBER UNLESS OTHERWISE NOTED.
3. CONVERT TO NORMALLY OPEN CONTACTS IN FIELD.
4. DESIGN BASED ON GE-APED ELEMENTARY 731E401AE (W/P-8858-M1-821-1018)
5. RELAY K56 DE-ENERGIZED ON NS4 ISOLATION SIGNAL.
6. FOR SPACE HEATER POWER SUPPLY, SEE DWG. E-241, SH. 18.

PRC APERTURE CARD

REFERENCE DWG'S.

BECHTEL NO.	PL. NO.
E-42	A-107191
M1-821-101	FF-114510
E-185	D-107334
E-301	D-107450
E-324	D-107473
E-9	E-107158
E-241	D-107390

REV.	DESCRIPTION	DRAWN	CHECKED	APPD
A	REF. TO INCORP. PCN E-3868			
B	REVISED PER DCP 538.2E, REV.1 (ADDED NOTE 6 & SPARE)	MD		
C	REV TERMINAL AND CONNECT NO PER DCP-8171.5 (FOR MODS)			
D	ASSIGNED TERMINAL NO. (DCP 82-INCORP. DCP. 611.13)			
E	ISSUED FOR CONSTRUCTION			

SCALE NONE | DESIGNED C.S. HOU | DRAWN M.P. SANTOS

PENNSYLVANIA POWER & LIGHT COMPANY
ALLENTOWN, PENNSYLVANIA
SUSQUEHANNA STEAM ELECTRIC STATION - UNIT 1, UNIT 2
BECHTEL - SAN FRANCISCO

SCHEMATIC DIAGRAM
NSSSS-MAIN STM LINE DRAIN ISOLATION VALVE, UNIT 2

JOB No. 8856 | DRAWING No. E-170 SH 5 | REV. 4

D-107319 SH 5

Docket # 50-387
Control # 8303220117
Date 3/10/83 of Document:
REGULATORY DOCKET FILE

UNCONTROLLED DOCUMENT
FOR REFERENCE ONLY

24X
I certify that the microfilmed image contained on this microform were used in the normal and regular course of business. This is a true, full, correct and complete reproduction and replacement for and/or in lieu of original documents supplied by the Bechtel group of companies.
RHEY
MRG-1
D

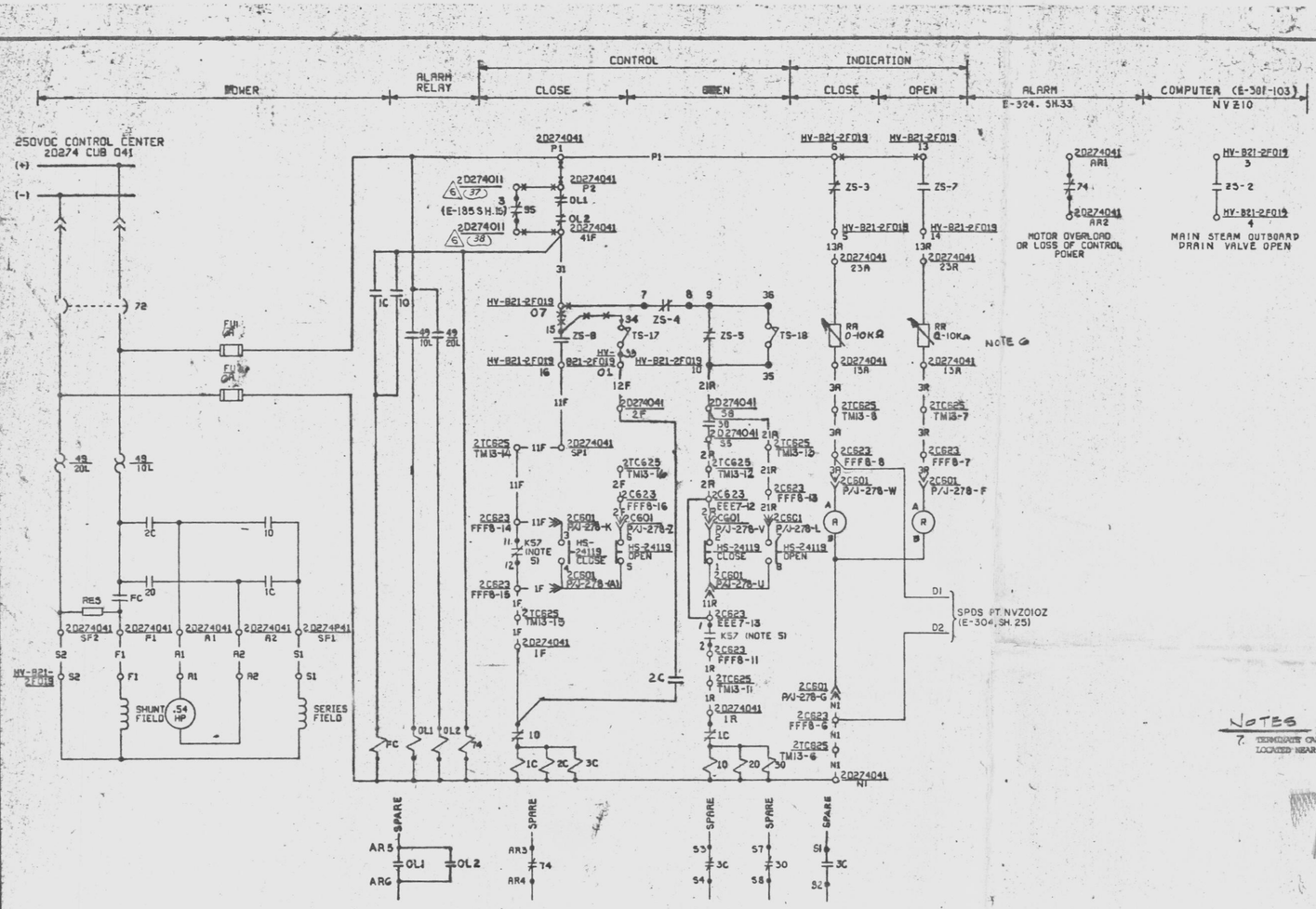

BLOCK NO.	CONTACT NO.		POSITION CLOSE	POSITION NORMAL	POSITION OPEN	DRAWING NO.
TOP	1 2 / 3 4	F		X	X	THIS SH.
		B	X			THIS SH.
BTM	5 6 / 7 8	F	X	X		THIS SH.
		B			X	THIS SH

CONTROL SWITCH HS-24119 (56)
GENERAL ELECTRIC TYPE CR2940

SPRING RETURN TO "NORMAL".

VALVE LIMIT SWITCH DEVELOPMENT

CONTACTS		100% OPEN	INTERMEDIATE	100% CLOSED	CONTACT USED
ZS-1	1 — 2				SPARE
ZS-2	3 — 4				E-301-103
ZS-3	5 — 6				THIS SH.
ZS-4	7 — 8				THIS SH.
ZS-5	9 — 10				THIS SH.
ZS-6	11 — 12				SPARE
ZS-7	13 — 14				THIS SH.
ZS-8	15 — 16				THIS SH.
ZS-9	17 — 18				SPARE
ZS-10	19 — 20				SPARE
ZS-11	21 — 22				SPARE
ZS-12	23 — 24				SPARE
ZS-13	25 — 26				SPARE
ZS-14	27 — 28				SPARE
ZS-15	29 — 30				SPARE
ZS-16	31 — 32				SPARE
TS-17	33 — 34	OPEN ON HIGH CLOSING TORQUE			THIS SH.
TS-18	35 — 36	OPEN ON HIGH OPENING TORQUE			THIS SH.

CONTACT CLOSED

HV-821-2F019

NOTES:

6. FIELD TO REPLACE WITH 0-10KΩ VARIABLE RES. AND ADJUST TO 24V ACROSS THE LIGHT CKT.
1. FOR STANDARD SYMBOLS FOR ELECTRICAL DWGS. SEE E-42.
2. ALL DEVICE NUMBERS TO BE SUFFIXED BY STARTER LOCATION NUMBER UNLESS OTHERWISE NOTED.
3. FOR SPACE HTR SEE DWG E-241 SH.13
4. DESIGN BASED ON GE-APED ELEMENTARY 791E401AE (V/P-8856-M1-821-101) & 205B7921 (V/P-8856-E-121-20(33)).
5. RELAY K57 DE-ENERGIZED ON NSS ISOLATION SIGNAL.

NOTES

7. TERMINATE CABLES AT UNSCHEDULED TERMINAL BOX WITH VEN NO. LOCATED NEAR THE VLV PER CONNECT LIST, E 380-114.

MAIN STEAM LINE OUTBOARD DRAIN ISOLATION VALVE HV-B21-2F019 II

SCHEME 2Q0123
REF. SH14

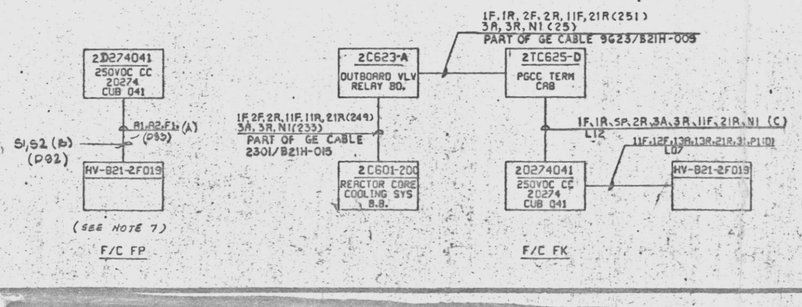

REFERENCE DWG'S.	
BECHTEL NO.	PL. NO.
E-42	A-107191
M1-B21-101	FF-114510
E-185	D-107334
E-301	D-107450
E-324	D-107473
E-241	D-107390
8856-E-121-20(33)	FF-105210

Docket #50-387
Control # 8303220117
Date 3/10/83 of Document:
REGULATORY DOCKET FILE

A	7/26/82	REV PER DCP 2000 Z.1	NG	TN			
A	5/4/82	REVISED PER DCP 538.2E, REV.1	NG				
A	4/14/82	REV TO INCORP FCR E-7770	JL	VAK			
A	2/4/82	ADDED NOTE 7 (DCR 45)	RB	EAB			
A	8/5/77	ISSUED FOR CONSTRUCTION	C.H.				
NO.	DATE	REVISIONS	BY	CHK'R	DESIGN SUPV.	ENG'R	PROJ. MGR.	APP'D

SCALE — DESIGNED C.S. HOU — DRAWN M.P. SANTOS — CHIEF ENGR.

PENNSYLVANIA POWER & LIGHT COMPANY
ALLENTOWN, PENNSYLVANIA
SUSQUEHANNA STEAM ELECTRIC STATION – UNIT 1, UNIT 2

BECHTEL – SAN FRANCISCO

SCHEMATIC DIAGRAM
NSSSS - MAIN STM LINE ISOLATION VALVE
UNIT 2

JOB No.	DRAWING No.	REV.
8856	E-170 SH 6	6

D-107319 SH 6

PRC APERTURE CARD

UNCONTROLLED DOCUMENT FOR REFERENCE ONLY

This drawing and the design it covers are the property of BECHTEL. They are not to be reproduced, copied, loaned, exhibited, or used except in the manner permitted by any written consent given by the lender to the borrower.

I certify that the microfilmed image contained on this microform were made in the normal and regular course of business. This is a true, full, correct and complete reproduction and replacement for and/or in lieu of original documents made by the Bechtel Power and Corporation.
P.C. AKINS 12-2-82 MRG 1
Camera Operator Camera Type

24X

D

This drawing and the design it covers are the property of BECHTEL. They are not to be reproduced, copied, loaned, exhibited, nor used except in the limited way and private way and private use permitted by any written consent given by the lender to the borrower.

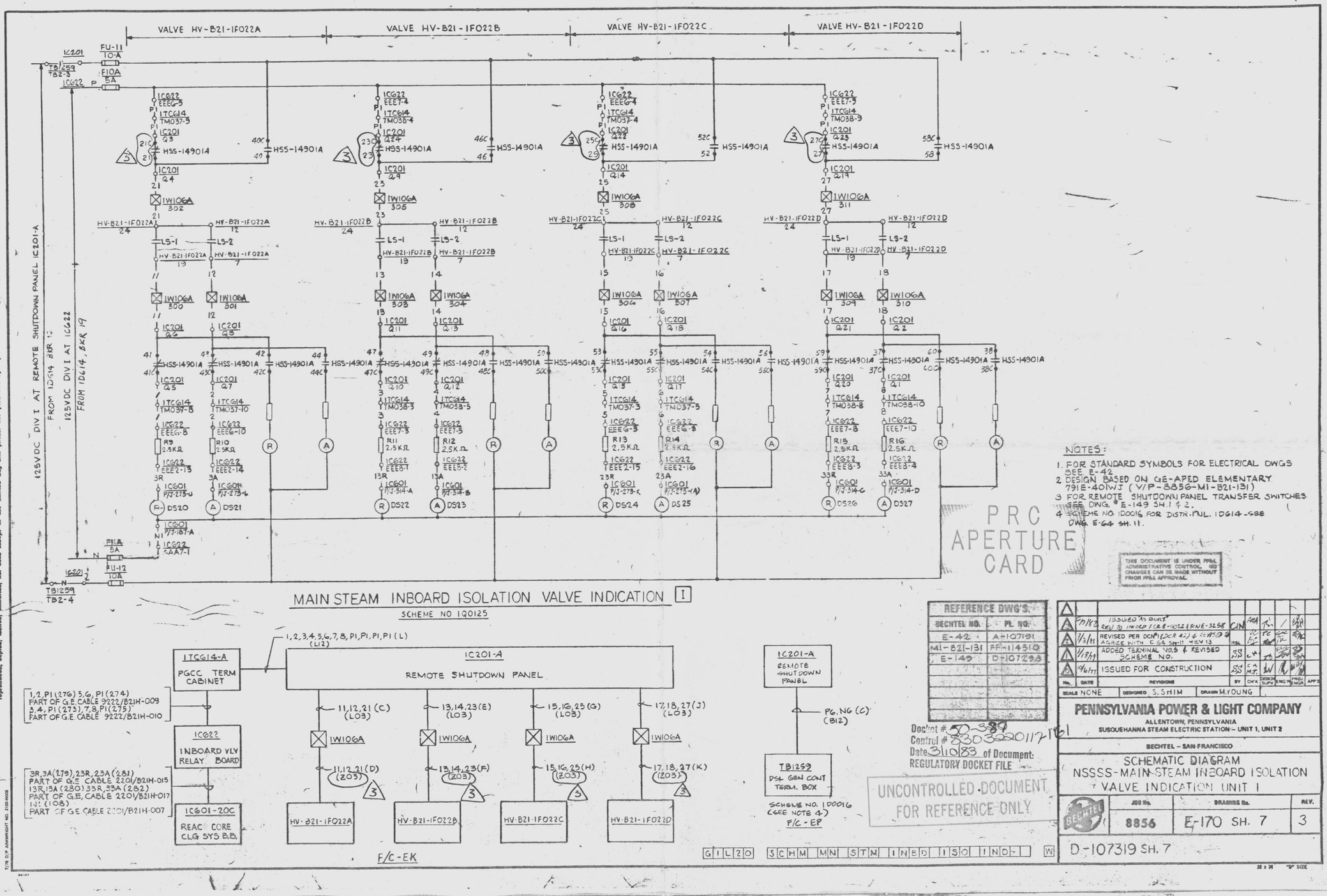

NOTES:

1. FOR STANDARD SYMBOLS FOR ELECTRICAL DWGS SEE E-42
2. DESIGN BASED ON GE-APED ELEMENTARY 791E-401WJ (W/P-8856-MI-B21-1B1)
3. FOR REMOTE SHUTDOWN PANEL TRANSFER SWITCHES SEE DWG. # E-149 SH. 1 & 2.
4. SCHEME NO. 1D0016 FOR DISTR. PNL. 1D614-SBE DWG. E-64 SH. 11.

PRC APERTURE CARD

THIS DOCUMENT IS UNDER PP&L ADMINISTRATIVE CONTROL. NO CHANGES CAN BE MADE WITHOUT PRIOR PP&L APPROVAL.

MAIN STEAM INBOARD ISOLATION VALVE INDICATION [I]

SCHEME NO 1Q0125

F/C-EK

REFERENCE DWG'S.	
BECHTEL NO.	PL. NO.
E-42	A-107191
MI-B21-131	FF-114510
E-149	D-107293

Doc/int # 50-389
Control # 8303290117 1R1
Date 3/10/83 of Document:
REGULATORY DOCKET FILE

UNCONTROLLED DOCUMENT FOR REFERENCE ONLY

NO.	DATE	REVISIONS	BY	CHK'D	DESIGN SUPV	ENG'G	PROJ ENG'R	APP'D
4	7/1/82	ISSUED AS BUILT REV. TO UNDER FIRE-11072 & RNE-3258	CJN	AHA	TS	/	D&H	
3	1/3/11	REVISED PER DCN (DCR 42) & TO AGREE WITH E-64 SH-11 REV 13	TBL	TC	TC	TC	TC	
2	11/8/11	ADDED TERMINAL NOS & REVISED SCHEME NO.	SS	C.A. M.T.	SS	C.A. M.T.	SS	
1	9/6/11	ISSUED FOR CONSTRUCTION	SS	C.A. M.T.	SS	C.A. M.T.	SS	

SCALE NONE | DESIGNED S. SHIM | DRAWN M. YOUNG

PENNSYLVANIA POWER & LIGHT COMPANY
ALLENTOWN, PENNSYLVANIA
SUSQUEHANNA STEAM ELECTRIC STATION – UNIT 1, UNIT 2

BECHTEL – SAN FRANCISCO

SCHEMATIC DIAGRAM
NSSSS-MAIN STEAM INBOARD ISOLATION VALVE INDICATION UNIT 1

JOB No.	DRAWING No.	REV.
8856	E-170 SH. 7	3

D-107319 SH. 7

22 x 34 "D" SIZE

7/78 D/P ARKWRIGHT NO. 2108-W09

24X

I certify that the microfilmed image contained on this microform were made in the normal and regular course of business. This is a true, full, correct and complete reproduction and replacement for and/or in lieu of original documents generated by the Bechtel group of companies.
Signed JACINTO Camera Operator Date 6-14-82 Camera Type MRU I

D

This drawing and the design it covers are the property of BECHTEL. They are merely loaned and on the borrower's express agreement that they will not be reproduced, copied, loaned, exhibited, nor used except in the limited way and purpose specified in writing by BECHTEL, and will be returned when requested. Any use not previously authorized by BECHTEL in writing or any use not previously authorized by any written consent given by the lender to the borrower.

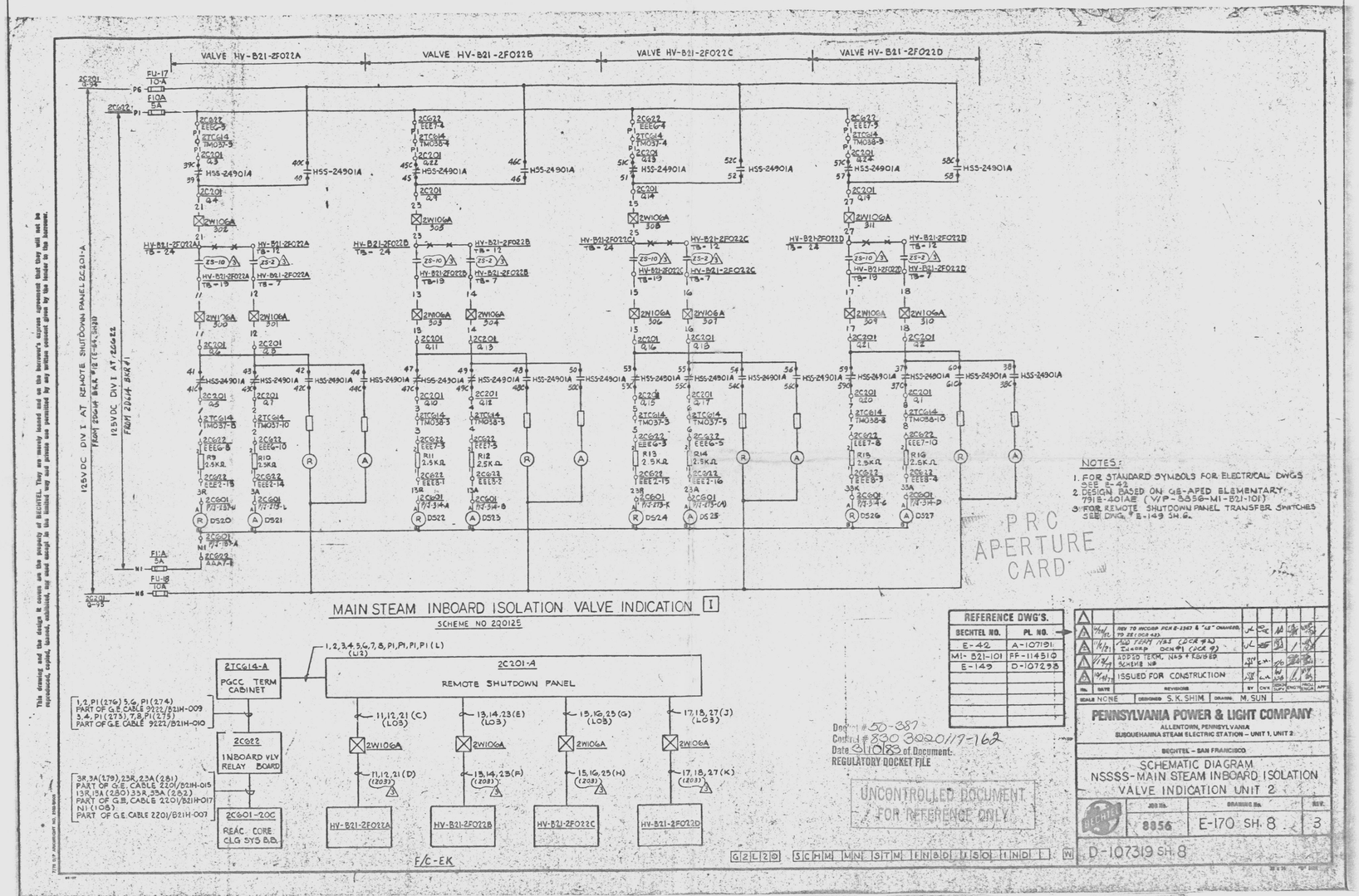

NOTES:
1. FOR STANDARD SYMBOLS FOR ELECTRICAL DWGS SEE E-42
2. DESIGN BASED ON GE-APED ELEMENTARY 7918-101AE (V.P.-8356-M1-B21-101)
3. FOR REMOTE SHUTDOWN PANEL TRANSFER SWITCHES SEE DWG. # E-149 SH. 6.

PRC APERTURE CARD

REFERENCE DWG'S.	
BECHTEL NO.	PL. NO.
E-42	A-107191
M1-B21-101	FF-114510
E-149	D-107298

NO.	DATE	REVISIONS	BY	CHK	QUAL	ENG	MGR	APP
1	10/4/77	ISSUED FOR CONSTRUCTION	JK	K.M.	MB			
2	11/8/77	ADDED TERM. NOS + REVISED SCHEME NO	JK	K.M.	MB			
3	11/14/77	ISSUED FOR CONSTRUCTION	JK	K.M.	MB			

SCALE NONE DESIGNED S.K. SHIM DRAWN M. SUN

PENNSYLVANIA POWER & LIGHT COMPANY
ALLENTOWN, PENNSYLVANIA
SUSQUEHANNA STEAM ELECTRIC STATION – UNIT 1, UNIT 2
BECHTEL – SAN FRANCISCO

SCHEMATIC DIAGRAM
NSSSS-MAIN STEAM INBOARD ISOLATION VALVE INDICATION UNIT 2

JOB NO.	DRAWING No.	REV.
8856	E-170 SH. 8	3

D-107319 SH. 8

Doc. # 50-387
Control # 830302011?-162
Date 3/10/83 of Document.
REGULATORY DOCKET FILE

UNCONTROLLED DOCUMENT
FOR REFERENCE ONLY

24X

I certify that the microfilmed image contained on this microform were made in the normal and regular course of business. This is a true, full, correct and complete reproduction and replacement for and/or in lieu of original docs. made, executed by the Bechtel companies.
Signature JACINTO Date 7-2-82 Camera Type MINI I
Camera Operator

D

This drawing and the design it covers are the property of BECHTEL. They are merely loaned and on the borrower's express agreement that they will not be reproduced, copied, loaned, exhibited, nor used except in the limited way and private use permitted by any written consent given by the lender to the borrower.

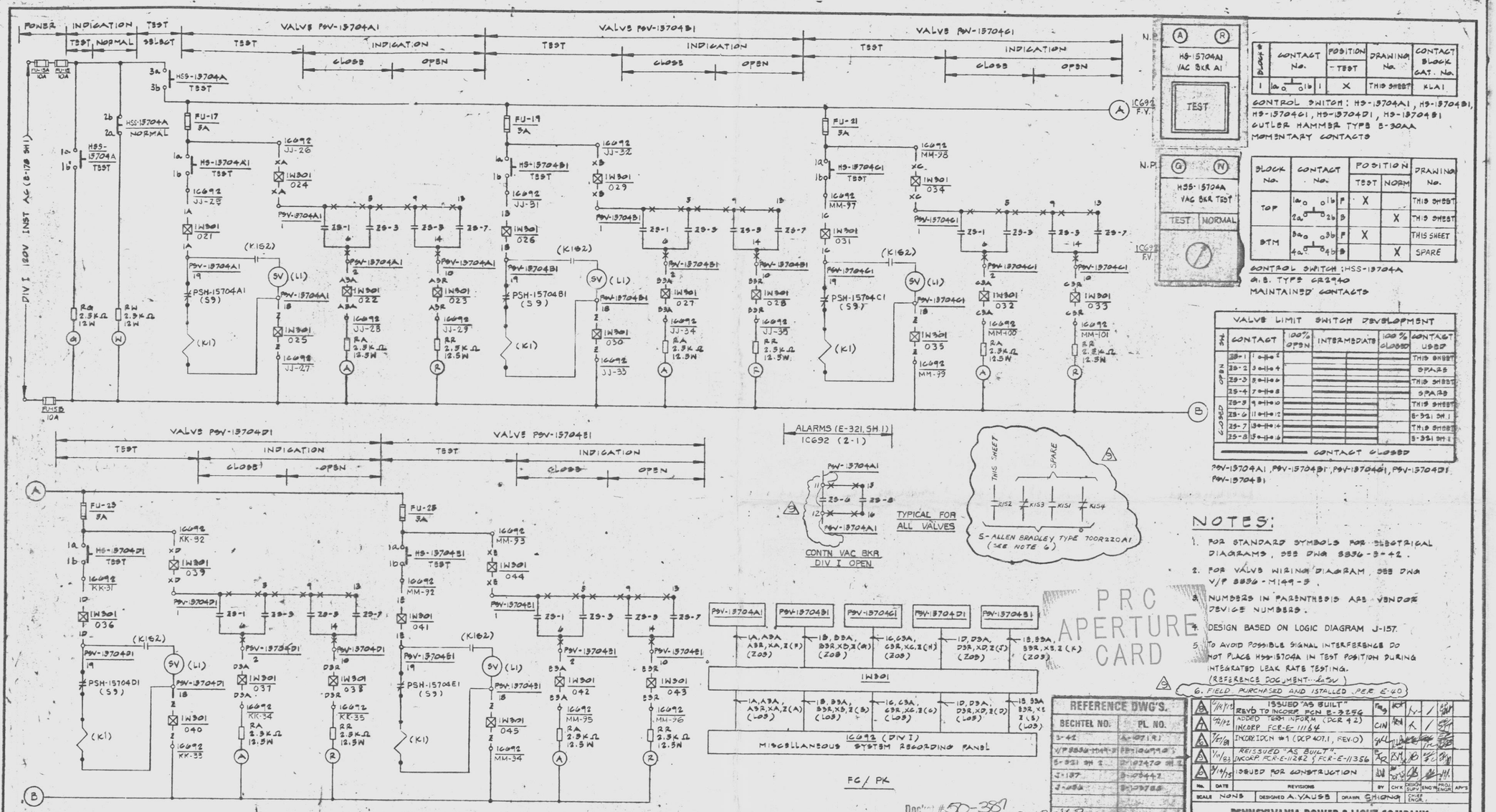

HS-15704A1 VAC BKR A1
TEST

HS5-15704A VAC BKR TEST
TEST NORMAL

BLOCK No.	CONTACT No.	POSITION - TEST	DRAWING No.	CONTACT BLOCK CAT. No.
1	1a 1b	X	THIS SHEET	KLA1

CONTROL SWITCH: HS-15704A1, HS-15704B1, HS-15704G1, HS-15704D1, HS-15704E1
CUTLER HAMMER TYPE E-30AA
MOMENTARY CONTACTS

BLOCK No.	CONTACT No.	POSITION TEST	POSITION NORM	DRAWING No.
TOP	1a 1b	X		THIS SHEET
	2a 2b		X	THIS SHEET
BTM	3a 3b	X		THIS SHEET
	4a 4b		X	SPARE

CONTROL SWITCH: HSS-15704A
G.E. TYPE CR2940
MAINTAINED CONTACTS

VALVE LIMIT SWITCH DEVELOPMENT

SW.	CONTACT	100% OPEN	INTERMEDIATE	100% CLOSED	CONTACT USED
OPEN	Z9-1 1 2				THIS SHEET
	Z9-2 3 4				SPARE
	Z9-3 5 6				THIS SHEET
	Z9-4 7 8				SPARE
CLOSED	Z9-5 9 10				THIS SHEET
	Z9-6 11 12				E-321 SH 1
	Z9-7 13 14				THIS SHEET
	Z9-8 15 16				E-321 SH 1

CONTACT CLOSED

PSV-15704A1, PSV-15704B1, PSV-15704G1, PSV-15704D1
PSV-15704E1

NOTES:

1. FOR STANDARD SYMBOLS FOR ELECTRICAL DIAGRAMS, SEE DWG 8856-E-42.
2. FOR VALVE WIRING DIAGRAM, SEE DWG V/P 8856-M149-5.
3. NUMBERS IN PARENTHESIS ARE VENDOR DEVICE NUMBERS.
4. DESIGN BASED ON LOGIC DIAGRAM J-157.
5. TO AVOID POSSIBLE SIGNAL INTERFERENCE DO NOT PLACE HS5-15704A IN TEST POSITION DURING INTEGRATED LEAK RATE TESTING. (REFERENCE DOCUMENT... Le 5V)
6. FIELD PURCHASED AND ISTALLED PER E-40

REFERENCE DWG'S.	
BECHTEL NO.	PL. NO.
3-42	A-107191
V/P 8856-M149-5	2R100998
E-321 SH 1	2N102470 SH 1
J-157	3-105447
J-454	3N103785

No.	DATE	REVISIONS	BY	CH'K	DESIGN SUPV.	ENG'G	PROJ. ENG'R	APP'D
5	7/19/79	ISSUED "AS BUILT" REVD TO INCORP PCN E-2256	RMS	KDT				
4	7/2/12	ADDED TERM INFORM (DCR 42) INCORP FCR-E 11164	CJN	KDT	K	/		
3	7/11/08	INCORPORATION #1 (DCP 407.1, REV.0)	SWL	DWB				
2	1/11/83	REISSUED "AS BUILT". INCORP FCR-E-11242 & FCR-E-11356	BR	KDT				
1	3/10/75	ISSUED FOR CONSTRUCTION						

SCALE NONE | DESIGNED A. VAUSS | DRAWN S. HONG | CHIEF ENGR.

PENNSYLVANIA POWER & LIGHT COMPANY
ALLENTOWN, PENNSYLVANIA
SUSQUEHANNA STEAM ELECTRIC STATION - UNIT 1, UNIT 2

BECHTEL - SAN FRANCISCO

SCHEMATIC DIAGRAM CONTAINMENT ATMOSPHERIC CONTROL-SUPPRESSION POOL VACU RELIEF UNIT 1

JOB No.	DRAWING No.	REV.
8856	E-171 SH 1	9
D-107320 SH 1		

21 X 34 "D" SIZE

DIV I SUPPRESSION POOL VACUUM RELIEF VALVES [1]

PSV-15704A1 THRU PSV-15704E1
SCHEME No. 1Q4151

Docket #50-387
Control #8303220117-163
Date 3/10/83 of Document:
REGULATORY DOCKET FILE

PRC APERTURE CARD

UNCONTROLLED DOCUMENT FOR REFERENCE ONLY

THIS DOCUMENT IS UNDER PP&L ADMINISTRATIVE CONTROL. NO CHANGES CAN BE MADE WITHOUT PRIOR PP&L APPROVAL.

REGISTERED PROFESSIONAL EDWARD K. KANG ENGINEER

24X

I certify that the microfilmed image contained on this microform were made in the normal and regular course of business. This is a true, full, correct and complete reproduction and replacement for and/or in lieu of original documents generated by the Bechtel group of companies.
Signed P.C. Akins Date 1-14-83 Camera Type MRG 1
Camera Operator

D

This drawing and the design it covers are the property of BECHTEL. They are merely loaned and on the borrower's express agreement that they will not be reproduced, copied, loaned, exhibited, nor used except to the limited way and private use permitted by any written consent given by the lender to the borrower.

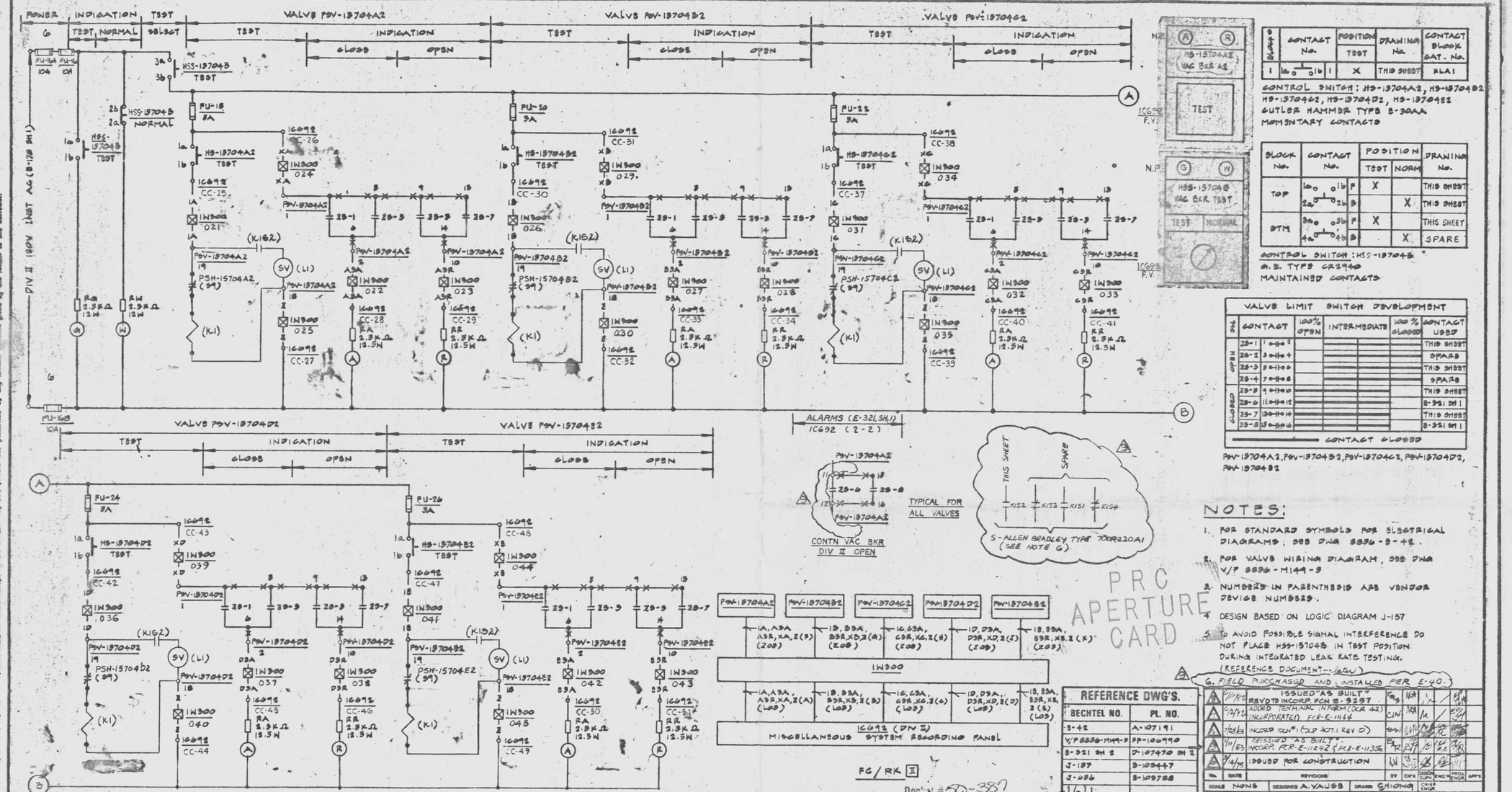

BLOCK #	CONTACT No.	POSITION TEST	DRAWING No.	CONTACT BLOCK CAT. No.
1	1a 2a 1b 2b	X	THIS SHEET	KLA1

CONTROL SWITCH: HS-15704A2, HS-15704B2
HS-15704C2, HS-15704D2, HS-15704E2
GUTLER HAMMER TYPE S-30AA
MOMENTARY CONTACTS

BLOCK No.	CONTACT No.	POSITION TEST	POSITION NORM	DRAWING No.
TOP	1a 2a 1b 2b P	X		THIS SHEET
	B		X	THIS SHEET
BTM	3a 4a 3b 4b P	X		THIS SHEET
	B		X	SPARE

CONTROL SWITCH: HSS-15704B
G.E. TYPE CR2940
MAINTAINED CONTACTS

VALVE LIMIT SWITCH DEVELOPMENT

SHT	CONTACT	100% OPEN	INTERMEDIATE	100% CLOSED	CONTACT USED
OPEN	29-1	1 o-l-o 2			THIS SHEET
	29-2	3 o-l-o 4			SPARE
	29-3	5 o-l-o 6			THIS SHEET
	29-4	7 o-l-o 8			SPARE
CLOSED	29-5	9 o-l-o 10			THIS SHEET
	29-6	11 o-l-o 12			E-321 SH 1
	29-7	13 o-l-o 14			THIS SHEET
	29-8	15 o-l-o 16			E-321 SH 1

CONTACT CLOSED

PSV-15704A2, PSV-15704B2, PSV-15704C2, PSV-15704D2, PSV-15704E2

NOTES:

1. FOR STANDARD SYMBOLS FOR ELECTRICAL DIAGRAMS, SEE DWG 8856-E-42.
2. FOR VALVE WIRING DIAGRAM, SEE DWG V/P 8856-M149-3
3. NUMBERS IN PARENTHESIS ARE VENDOR DEVICE NUMBERS.
4. DESIGN BASED ON LOGIC DIAGRAM J-157
5. TO AVOID POSSIBLE SIGNAL INTERFERENCE DO NOT PLACE HSS-15704B IN TEST POSITION DURING INTEGRATED LEAK RATE TESTING. (REFERENCE DOCUMENT--later)
6. FIELD PURCHASED AND INSTALLED PER E-40.

REFERENCE DWG'S.	
BECHTEL NO.	PL. NO.
5-42	A-107191
V/P 8856-M149-3	SP-106990
8-321 SH 2	D-107470 SH 2
J-157	B-109447
J-056	B-109788

NO.	DATE	REVISIONS	BY	CHK'D	DESIGN ENG'R	PROJ ENG'R	APP'D
11	11/82	ISSUED "AS BUILT" REVD TO INCORP. FCN 8-9287	TG	NH			
10	9/29/82	ADDED TERMINAL INFORMATION (SCR 42) (INCORPORATED) FCR-E-11164	CJN	NH			
9	7/26/82	INCORP FCN'S (SCR 307.1 REV 2)	SMH				
8	7/11/82	REVISED "AS BUILT" INCORP. FCR-E-11242 & FCR-E-11350	SMH				
7	3/4/75	ISSUED FOR CONSTRUCTION	LW				

SCALE NONE | DESIGNED A. VAUGS | DRAWN CHIONG | CHIEF ENGR.

PENNSYLVANIA POWER & LIGHT COMPANY
ALLENTOWN, PENNSYLVANIA
SUSQUEHANNA STEAM ELECTRIC STATION - UNIT 1, UNIT 2

BECHTEL - SAN FRANCISCO

SCHEMATIC DIAGRAM CONTAINMENT ATMOSPHERIC CONTROL-SUPPRESSION POOL VACU RELIEF UNIT 1

JOB No.	DRAWING No.	REV.
8856	E-171 SH 2	9

D-107320 SH 2

DIV II SUPPRESSION POOL VACUUM RELIEF VALVES II

PSV-15704A2 THRU PSV-15704E2

SCHEME No. 1Q4152

FC/RK II

Doc't #SD-387
Control #8303220117 164
Date 3/10/83 of Document:
REGULATORY DOCKET FILE

PRC APERTURE CARD

THIS DOCUMENT IS UNDER MSA ADMINISTRATIVE CONTROL. NO CHANGES CAN BE MADE WITHOUT PRIOR FINAL APPROVAL

UNCONTROLLED DOCUMENT FOR REFERENCE ONLY

EDWARD K. KANG REGISTERED PROFESSIONAL ENGINEER

24X

I certify that the microfilmed image contained on this microform were made in the normal and regular course of business. This is a true, full, correct and complete reproduction and replacement for and/or in lieu of original documents generated by the Bechtel group of companies.
Signed _____ Date 1-14-83 Camera Type ARG 1
Camera Operator

D

This drawing and the design it covers are the property of BECHTEL. They are merely loaned and on the borrower's express agreement that they will not be reproduced, copied, loaned, exhibited, nor used except in the limited way and private use permitted by any written consent given by the lender to the borrower.

CONTAINMENT ATMOSPHERIC CONTROL-ATMOSPHERIC MONITORING VLVS [I]

SCHEME 1Q4155

(TYP OF 4 SEE TABLE B)

TABLE B

AC POWER SUPPLY	SCHEME NO.	F/C	DC POWER SUPPLY	ESS DIV	VALVES COMPONENT BOX					CONTROL SWITCH	FUSE NO.	AUX RELAY
1Y216U17 THIS SH	1Q4155	EK	1D6A410 E171 SH 1	I	SV-15742A 1CB220B	SV-15752A 1CB220B	SV-15774A 1CB220B	SV-15734A 1CB220B	SV-15782A 1CB220B	HS-15742A	FU-12 FU-18 FU-19	62X-15700A1 8 2 HSX-15742A1
1Y226U8 E172 SH 6	1Q4156	FK	1D6A410 E171 SH 6	II	SV-15742B 1CB218B	SV-15752B 1CB218B	SV-15774B 1CB218B	SV-15734B 1CB218B	SV-15782B 1CB218B	HS-15742B	FU-12 FU-25 FU-26	62X-15700B1 8 2 HSX-15742B1
1Y216U17 THIS SH	1Q4157	EK	1D6A410 E171 SH 1	I	SV-15740A 1CB220A	SV-15750A 1CB220A	SV-15776A 1CB220A	SV-15736A 1CB220A	SV-15780A 1CB220A	HS-15740A	FU-13 FU-20 FU-21	62X-15700A1 7 1 HSX-15740A1
1Y226U8 E172 SH 8	1Q4158	FK	1D6A410 E171 SH 8	II	SV-15740B 1CB218A	SV-15750B 1CB218A	SV-15776B 1CB218A	SV-15736B 1CB218A	SV-15780B 1CB218A	HS-15740B	FU-13 FU-27 FU-28	62X-15700B1 7 1 HSX-15740B1

TERMINATIONS																					POWER 125VDC		LINE CODE	NAME PLATE (NOTE 5)	ALARM RELAY CONTACT NO.
ACR PANEL																									
RELAY PNL																									
PGCC																									
LOCAL PNL																									
1CG01-20C	-D	-I	-H	-C	-A	-N																	975		
1C661R3	E1	E2	E3	E4	E5	E7	E28	E8	E9	E10	E11	E12	E27	E14	E15	C46	C47						375	CONTN GAS ANLZR ISO LOOP A	74-15742A 1 7
ITCG12-B							TM-42	TM-42	TM-43	TM-43	TM-43	TM-43	TM-42	J80X-1	J80X-2								976		
ICB220B							TBA-6	TBA-5	TBA-4	TBA-3	TBA-2	TBA-1	TBA-12	TBA-11	TBA-10								717		
1CG01-20C	-D	-I	-H	-C	-A	-R																	801		
1C661B3	A1	A2	A3	A4	A5	A6	A13	A7	A8	A9	A10	A11	A12	N/A	N/A	A39	A40						801 858	CONTN GAS ANLZR ISO LOOP B	74-15742B 1 7
ITCG22-B							TM-55	TM-55	TM-55	TM-55	TM-55	TM-55	TM-55										858		
ICB218B							TBA-6	TBA-5	TBA-4	TBA-3	TBA-2	TBA-1	TBA-12	TBA-11	TBA-10	TBA-9	TBA-8	TBA-7	TBA-14	TBA-13					
1CG01-20C	-G	-F	-N	-V	-U																		975		
1C661R3	E16	E17	E18	E19	E20	E21	E30	E22	E23	E24	E25	E26	E29	N/A	N/A	C46	C47						375	CONTN GAS ANLZR ISO LOOP A	74-15740A 1 7
ITCG12-B							TM-42	TM-42	TM-42	TM-42	TM-42	TM-42	TM-42										717		
ICB220A							TBA-6	TBA-5	TBA-4	TBA-3	TBA-2	TBA-1	TBA-12	TBA-11	TBA-10	TBA-9	TBA-8	TBA-7	TBA-14	TBA-13					
1CG01-20C	-N	-M	-G	-F	-W	-V																	801		
1C661B3	A15	A16	A17	A18	A19	A14	A27	A21	A22	A23	A20	A25	A26	N/A	N/A	A39	A40						801 858	CONTN GAS ANLZR ISO LOOP B	74-15740B 1 7
ITCG22-B							TM-55	TM-55	TM-55	TM-55	TM-55	TM-55	TM-55										858		
ICB218A							TBA-11	TBA-10	TBA-9	TBA-8	TBA-7	TBA-6	TBA-5	TBA-4	TBA-3	TBA-2	TBA-1	TBA-12							

SPARE (SEE NOTE 6)

CONTN GAS ANLZR ISO LOOP B — F.V. ICG01

BLOCK No.	CONTACT No.	POSITION CLOSE	POSITION OPEN	DRAWING No.	CONTACT BLOCK CAT. No.
OPEN	1a 1b 1	X		SPARE	KLA3
	2a 2b 2		X	THIS SH.	
CLOSE	3a 3b 3		X	THIS SH.	KLA3
	4a 4b 4	X		SPARE	

CONTROL SWITCH: HS-15740A, HS-1742A, HS-15740B, HS-15742B.

CUTLER HAMMER TYPE E-30AB MOMENTARY CONTACTS.

FIELD TO JUMPER THE 120VAC POWER SUPPLY TO RELAY SW. TERMINAL 1 & 2 AT SV AS SHOWN

DETAIL "A"

FOR SV-15776B & SV-15736B ONLY

SV LIMIT SWITCH DEVELOPMENT				
CONTACT	100% CLOSED	100% OPEN	CONTACT USED	
ZS-1	X		THIS SH.	
ZS-2		X	THIS SH	

SOL. VALVE: SV-15740A&B, SV-15750A&B, SV-15780A&B, SV-15736A, SV-15776A, SV-15742A&B, SV-15752A&B, SV-15782A&B, SV-15734A&B, SV-15774A&B

FOR VENDOR'S DWG, SEE V/P 8856-J70-16

SV RELAY SW DEVELOPMENT					
RELAY	CONTACT	100% CLOSED	100% OPEN	CONTACT USED	
ESX1 ENERGIZED WHEN VALVE CLOSED A→B	(4) 3 (5)	X		THIS SH	
	(3) 2 (8)	X		SPARE	
ESX2 ENERGIZED WHEN VALVE OPEN C→D	(11) 3 (12)		X	THIS SH	
	(10) 2 (9)		X	E-171 SH 9	
MAGNETIC SW	MS1	X		THIS SH	
	MS2		X	THIS SH	

SOL VALVE: FOR SV-15736B & SV-15776B ONLY FOR VENDOR'S DWG: SEE V/P 8856-J70-26. (NUMBER IN PARENTHESIS IS TERM. NO.)

NOTES:

1. FOR STANDARD SYMBOLS FOR ELECTRICAL DIAGRAMS SEE DWG E-42.
2. DESIGN BASED ON LOGIC DIAGRAM J-157.
3. FIELD TO PURCHASE & INSTALL 8 FUSES & 4 RELAYS, AS SHOWN: FUSE TYPE: LIMITRON KTK 600V 5A RELAY TYPE: GE 12 HMA11B-G. REF. E4D SH. 5F
4. RCA IN4458 OR EQUIVALENT
5. FIELD TO CHANGE NAME PLATE AS SHOWN ON NAME PLATE COLUMN.
6. CAUTION: DO NOT USE N.C. CONTACT OF THIS RELAY FOR CONTROL CIRCUIT INTERLOCK.

AUXILIARY RELAY	
RELAY NO. LOCATION	CONTACT INT'LK. REF.
HSX-15742A1	SCHEME 151600 E267 SH. 1
1CB220B	SCHEME 151602 E267 SH. 2
HSX-15742B1	SCHEME 151601 E267 SH. 1
1CB218B	SCHEME 151603 E267 SH. 2
HSX-15740A1	SCHEME 151602 E267 SH. 2
1CB220A	SCHEME 151600 E267 SH. 1
HSX-15740B1	SCHEME 151603 E267 SH. 2
1CB218A	SCHEME 151601 E267 SH. 1

REFERENCE DWG'S.	
BECHTEL NO.	PL. NO.
E-42	A-107195
E-64	D-107215
J-157	B-103447
E-175	D-107320
E-40	A-107189

THIS DOCUMENT IS UNDER PP&L ADMINISTRATIVE CONTROL. NO CHANGES CAN BE MADE WITHOUT PRIOR PP&L APPROVAL.

No.	DATE	REVISIONS	BY	CHK	SUPV ENG	PROJ ENG	APP
5	3/11/85	REVISED TO INCORPORATE FCR-E-10 837	EAP	CM	TC		BP 3/11
4	2/5/85	DELETED DCP 538IE REV.1 PER DCR-3690	CJN	AEH	TC		BP 2/5
3	1/11/85	REVISED PER DCP 538IE REV.1 PER DCR-3690 ISSUED "AS BUILT"	TJY	CJN	TC		BP 1/11
2	9/12/84	REV'D TO INCORP IDCN #2/DCP 8095 & FCR-E-10349 REV'D AUX RELAY NO'S ON TABLE B (DCR 42)	RJ	CJN	TC		BP 9/12
1	5/14/84	ISSUED FOR CONSTRUCTION	HH	MT	TC		BP 5/14

SCALE NONE | DESIGNED A. KRAUSE | DRAWN | CHIEF ENGR.

PENNSYLVANIA POWER & LIGHT COMPANY
ALLENTOWN, PENNSYLVANIA
SUSQUEHANNA STEAM ELECTRIC STATION - UNIT 1, UNIT 2

BECHTEL - SAN FRANCISCO

SCHEMATIC DIAGRAM
CONTAINMENT ATMOSPHERIC CONTROL - ATMOSPHERIC MONITORING VLVS. UNIT 1

JOB No.	DRAWING No.	REV.
8856	E-171 SH 4	16

D-107320 SH 4

PRC APERTURE CARD

UNCONTROLLED DOCUMENT FOR REFERENCE ONLY

G1T01 SCHEM CONTN ATMOS MON VLVS M

24X

I certify that this microfilmed image contained on this microform were made in the normal and regular course of business. This is a true, full, correct and complete reproduction and replacement for and/or in lieu of original documents prepared by the Bechtel power companies.
Signature JACINTO Camera Operator
Date 6/21/83 Camera Type MRG I

Docket # 50-387
Control # 8903220117-166
Date 3/10/83 of Document
REGULATORY DOCKET FILE

D

This drawing and the design it covers are the property of BECHTEL. They are merely loaned and on the borrower's express agreement that they will not be reproduced, copied, loaned, exhibited, nor used except in the limited way and private use permitted by any written consent given by the lender to the borrower.

CONTAINMENT ATMOSPHERIC CONTROL-ATMOSPHERIC MONITORING VLVS [I]

SCHEME 1Q4155

(TYP OF 4 SEE TABLE B)

TABLE B

AC POWER SUPPLY	SCHEME NO.	F/C	DC POWER SUPPLY	ESS DIV	VALVES COMPONENT BOX					CONTROL SWITCH	FUSE NO.	AUX RELAY
1Y216U17 THIS SH	1Q4155	EK	1D6A410 E171 SH 1	I	SV-15742A 1CB220B	SV-15752A 1CB220B	SV-15774A 1CB220B	SV-15734A 1CB220B	SV-15782A 1CB220B	HS-15742A	FU-12 FU-18 FU-19	62X-15700A1 8 2 HSX-15742A1
1Y226U8 E172 SH 6	1Q4156	FK	1D6A410 E171 SH 6	II	SV-15742B 1CB218B	SV-15752B 1CB218B	SV-15774B 1CB218B	SV-15734B 1CB218B	SV-15782B 1CB218B	HS-15742B	FU-12 FU-25 FU-26	62X-15700B1 8 2 HSX-15742B1
1Y216U17 THIS SH	1Q4157	EK	1D6A410 E171 SH 1	I	SV-15740A 1CB220A	SV-15750A 1CB220A	SV-15776A 1CB220A	SV-15736A 1CB220A	SV-15780A 1CB220A	HS-15740A	FU-13 FU-20 FU-21	62X-15700A1 7 1 HSX-15740A1
1Y226U8 E172 SH 8	1Q4158	FK	1D6A410 E171 SH 8	II	SV-15740B 1CB218A	SV-15750B 1CB218A	SV-15776B 1CB218A	SV-15736B 1CB218A	SV-15780B 1CB218A	HS-15740B	FU-13 FU-27 FU-28	62X-15700B1 7 1 HSX-15740B1

TERMINATIONS																					POWER 125VDC		LINE CODE	NAME PLATE (NOTE 5)	ALARM RELAY CONTACT NO.
ACR PANEL																									
RELAY PNL																									
PGCC																									
LOCAL PNL																									
1CG01-20C	-D	-I	-H	-C	-A	-N																	975		
1C661R3	E1	E2	E3	E4	E5	E7	E28	E8	E9	E10	E11	E12	E27	E14	E15	C46	C47						375	CONTN GAS ANLZR ISO LOOP A	74-15742A 1 7
ITCG12-B							TM-42	TM-42	TM-43	TM-43	TM-43	TM-43	TM-42	J80X-1	J80X-2								976		
ICB220B							TBA-6	TBA-5	TBA-4	TBA-3	TBA-2	TBA-1	TBA-12	TBA-11	TBA-10								717		
1CG01-20C	-D	-I	-H	-C	-A	-R																	801		
1C661B3	A1	A2	A3	A4	A5	A6	A13	A7	A8	A9	A10	A11	A12	N/A	N/A	A39	A40						801 858	CONTN GAS ANLZR ISO LOOP B	74-15742B 1 7
ITCG22-B							TM-55	TM-55	TM-55	TM-55	TM-55	TM-55	TM-55										858		
ICB218B							TBA-6	TBA-5	TBA-4	TBA-3	TBA-2	TBA-1	TBA-12	TBA-11	TBA-10	TBA-9	TBA-8	TBA-7	TBA-14	TBA-13					
1CG01-20C	-G	-F	-N	-V	-U																		975		
1C661R3	E16	E17	E18	E19	E20	E21	E30	E22	E23	E24	E25	E26	E29	N/A	N/A	C46	C47						375	CONTN GAS ANLZR ISO LOOP A	74-15740A 1 7
ITCG12-B							TM-42	TM-42	TM-42	TM-42	TM-42	TM-42	TM-42										717		
ICB220A							TBA-6	TBA-5	TBA-4	TBA-3	TBA-2	TBA-1	TBA-12	TBA-11	TBA-10	TBA-9	TBA-8	TBA-7	TBA-14	TBA-13					
1CG01-20C	-N	-M	-G	-F	-W	-V																	801		
1C661B3	A15	A16	A17	A18	A19	A14	A27	A21	A22	A23	A20	A25	A26	N/A	N/A	A39	A40						801 858	CONTN GAS ANLZR ISO LOOP B	74-15740B 1 7
ITCG22-B							TM-55	TM-55	TM-55	TM-55	TM-55	TM-55	TM-55										858		
ICB218A							TBA-11	TBA-10	TBA-9	TBA-8	TBA-7	TBA-6	TBA-5	TBA-4	TBA-3	TBA-2	TBA-1	TBA-12							

SPARE (SEE NOTE 6)

CONTN GAS ANLZR ISO LOOP B — F.V. ICG01

BLOCK No.	CONTACT No.	POSITION CLOSE	POSITION OPEN	DRAWING No.	CONTACT BLOCK CAT. No.
OPEN	1a 1b 1	X		SPARE	KLA3
	2a 2b 2		X	THIS SH.	
CLOSE	3a 3b 3		X	THIS SH.	KLA3
	4a 4b 4	X		SPARE	

CONTROL SWITCH: HS-15740A, HS-1742A, HS-15740B, HS-15742B.

CUTLER HAMMER TYPE E-30AB MOMENTARY CONTACTS.

FIELD TO JUMPER THE 120VAC POWER SUPPLY TO RELAY SW. TERMINAL 1 & 2 AT SV AS SHOWN

DETAIL "A"

FOR SV-15776B & SV-15736B ONLY

SV LIMIT SWITCH DEVELOPMENT				
CONTACT	100% CLOSED	100% OPEN	CONTACT USED	
ZS-1	X		THIS SH.	
ZS-2		X	THIS SH	

SOL. VALVE: SV-15740A&B, SV-15750A&B, SV-15780A&B, SV-15736A, SV-15776A, SV-15742A&B, SV-15752A&B, SV-15782A&B, SV-15734A&B, SV-15774A&B

FOR VENDOR'S DWG, SEE V/P 8856-J70-16

SV RELAY SW DEVELOPMENT					
RELAY	CONTACT	100% CLOSED	100% OPEN	CONTACT USED	
ESX1 ENERGIZED WHEN VALVE CLOSED A→B	(4) 3 (5)	X		THIS SH	
	(3) 2 (8)	X		SPARE	
ESX2 ENERGIZED WHEN VALVE OPEN C→D	(11) 3 (12)		X	THIS SH	
	(10) 2 (9)		X	E-171 SH 9	
MAGNETIC SW	MS1	X		THIS SH	
	MS2		X	THIS SH	

SOL VALVE: FOR SV-15736B & SV-15776B ONLY FOR VENDOR'S DWG: SEE V/P 8856-J70-26. (NUMBER IN PARENTHESIS IS TERM. NO.)

NOTES:

1. FOR STANDARD SYMBOLS FOR ELECTRICAL DIAGRAMS SEE DWG E-42.
2. DESIGN BASED ON LOGIC DIAGRAM J-157.
3. FIELD TO PURCHASE & INSTALL 8 FUSES & 4 RELAYS, AS SHOWN: FUSE TYPE: LIMITRON KTK 600V 5A RELAY TYPE: GE 12 HMA11B-G. REF. E4D SH. 5F
4. RCA IN4458 OR EQUIVALENT
5. FIELD TO CHANGE NAME PLATE AS SHOWN ON NAME PLATE COLUMN.
6. CAUTION: DO NOT USE N.C. CONTACT OF THIS RELAY FOR CONTROL CIRCUIT INTERLOCK.

AUXILIARY RELAY	
RELAY NO. LOCATION	CONTACT INT'LK. REF.
HSX-15742A1	SCHEME 151600 E267 SH. 1
1CB220B	SCHEME 151602 E267 SH. 2
HSX-15742B1	SCHEME 151601 E267 SH. 1
1CB218B	SCHEME 151603 E267 SH. 2
HSX-15740A1	SCHEME 151602 E267 SH. 2
1CB220A	SCHEME 151600 E267 SH. 1
HSX-15740B1	SCHEME 151603 E267 SH. 2
1CB218A	SCHEME 151601 E267 SH. 1

REFERENCE DWG'S.	
BECHTEL NO.	PL. NO.
E-42	A-107195
E-64	D-107215
J-157	B-103447
E-175	D-107320
E-40	A-107189

THIS DOCUMENT IS UNDER PP&L ADMINISTRATIVE CONTROL. NO CHANGES CAN BE MADE WITHOUT PRIOR PP&L APPROVAL.

No.	DATE	REVISIONS	BY	CHK	SUPV ENG	PROJ ENG	APP
5	3/11/85	REVISED TO INCORPORATE FCR-E-10 837	EAP	CM	TC		BP 3/11
4	2/5/85	DELETED DCP 538IE REV.1 PER DCR-3690	CJN	AEH	TC		BP 2/5
3	1/11/85	REVISED PER DCP 538IE REV.1 PER DCR-3690 ISSUED "AS BUILT"	TJY	CJN	TC		BP 1/11
2	9/12/84	REV'D TO INCORP IDCN #2/DCP 8095 & FCR-E-10349 REV'D AUX RELAY NO'S ON TABLE B (DCR 42)	RJ	CJN	TC		BP 9/12
1	5/14/84	ISSUED FOR CONSTRUCTION	HH	MT	TC		BP 5/14

SCALE NONE | DESIGNED A. KRAUSE | DRAWN | CHIEF ENGR.

PENNSYLVANIA POWER & LIGHT COMPANY
ALLENTOWN, PENNSYLVANIA
SUSQUEHANNA STEAM ELECTRIC STATION - UNIT 1, UNIT 2

BECHTEL - SAN FRANCISCO

SCHEMATIC DIAGRAM
CONTAINMENT ATMOSPHERIC CONTROL - ATMOSPHERIC MONITORING VLVS. UNIT 1

JOB No.	DRAWING No.	REV.
8856	E-171 SH 4	16

D-107320 SH 4

PRC APERTURE CARD

UNCONTROLLED DOCUMENT FOR REFERENCE ONLY

G1T01 SCHEM CONTN ATMOS MON VLVS M

24X

I certify that this microfilmed image contained on this microform were made in the normal and regular course of business. This is a true, full, correct and complete reproduction and replacement for and/or in lieu of original documents prepared by the Bechtel power companies.
Signature JACINTO Camera Operator
Date 6/21/83 Camera Type MRG I

Docket # 50-387
Control # 8903220117-166
Date 3/10/83 of Document
REGULATORY DOCKET FILE

D

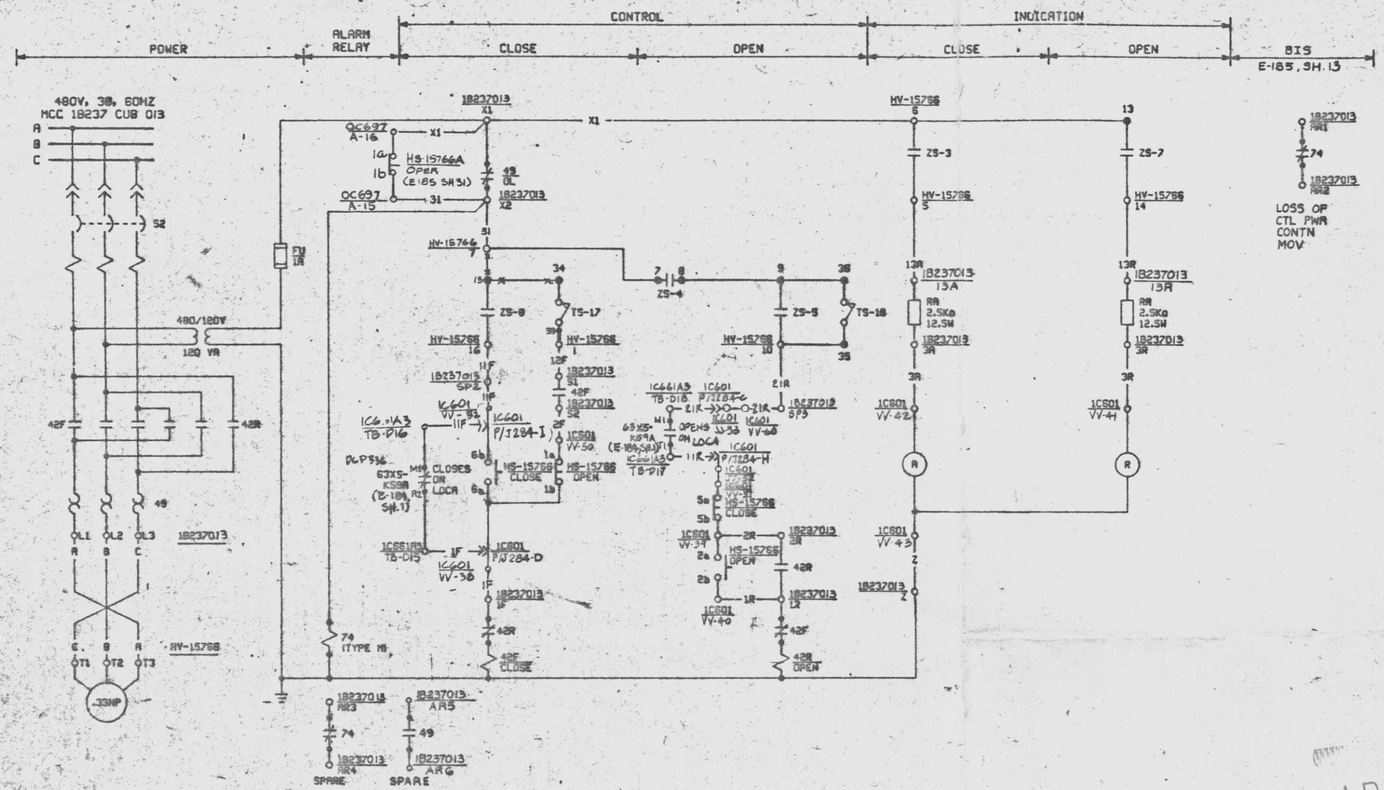

CONTAINMENT ATMOSPHERIC CONTROL ISOLATION VALVE HV-15766 [I]

SCHEME 1Q4169

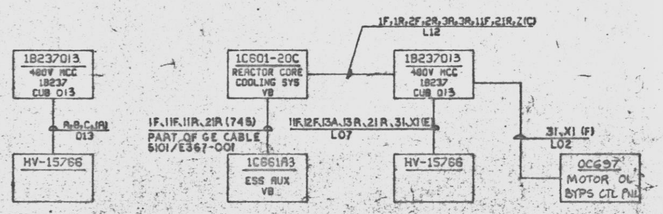

NOTES:

1. FOR STANDARD SYMBOLS FOR ELECTRICAL DWGS. SEE E-42.
2. ALL DEVICE NUMBERS TO BE SUFFIXED BY STARTER LOCATION NUMBER UNLESS OTHERWISE NOTED.
3. DESIGN BASED ON LOGIC DIAGRAM J-157.
4. FOR SPACE HEATER REFER TO DWG E-241

REFERENCE DWG'S.	
BECHTEL NO.	PP&L NO.
E-42	E-107
E157, SH.9	E-107320 SH.5
E-184	E-107320 SH.5
E-185	E-107320 SH.5
E-241	E-107320 SH.5

Docket # 50-387
Control # 830322011?-167
Date 3/10/83 of Document:
REGULATORY DOCKET FILE

NO.	DATE	REVISIONS	BY	CHK
5	7/10/92	REVISED PER DCP 538.1E (REV 1) & INCORP FCR #E-10567 & FCR #E-10613	SA	SJM
4	4/10	BFI-682 WAS INCORP IN REV 3 (W.A. 80)	GT	TC
3	12/84	ISSUED "AS BUILT."	TG	TC
2	7/10/82	DELETED DCP 538.1E REV. 1 (SPR 2490)	LWN	WH TC
1	5-10-78	ISSUED FOR CONSTRUCTION	RW	RW MT

SCALE: NONE | DESIGNED: R. VRUSE | DRAWN

PENNSYLVANIA POWER & LIGHT COMPANY
ALLENTOWN, PENNSYLVANIA
SUSQUEHANNA STEAM ELECTRIC STATION – UNIT 1, UNIT 2
BECHTEL – SAN FRANCISCO

SCHEMATIC DIAGRAM
CONTAINMENT ATMOSPHERIC CONTROL-
CONTN. ISOLATION VALVE, UNIT 1

JOB NO.	DRAWING NO.	REV.
8856	E-171 SH 5	11

D-107320 SH 5

This drawing and the design it covers are the property of BECHTEL. They are issued only on the borrower's express agreement that they will not be reproduced, copied, loaned, exhibited, used except in the limited way and private use permitted by any written consent given by the lender to the borrower.

PRC APERTURE CARD

UNCONTROLLED DOCUMENT FOR REFERENCE ONLY

24X

I certify that the microfilmed image contained on this microform is the current and regular course of business. This is a true, full, correct and complete reproduction and microfilmed for author in lieu of original document.

RHEY

MRG-1

This drawing and the design it covers are the property of BECHTEL. They are merely loaned and on the borrower's express agreement that they will not be reproduced, copied, loaned, exhibited, nor used except in the limited way and private use permitted by any written consent given by the lender to the borrower.

POWER | ALARM RELAY | CONTROL: CLOSE, OPEN | INDICATION: CLOSE, OPEN | BIS E-185, SH.12

250VDC CONTROL CENTER
10274 CUB 012

(+) (-)

72

FU-1 6A

FU-2 6A

49 20L

49 10L

2C 1C 20 1C FC

10274012 SF2 S2 F1 A1 A2 S1 SF1

HV-15768 S2 F1 A1 A2 S1

SHUNT FIELD 033 12

SERIES FIELD

1C 10 49 20L 49 10L

FC CLOSE 2C 74

AR3 AR4 74 SPARE

AR5 AR6 OL1 OL2 SPARE

S3 S4 3C S5 S6 30 S7 S8 30 SPARE SPARE SPARE

10274012 P1

OC697 B-16 P1 10274012 P2

1a 1b HS-15768A OPER (E-185 SH 31) OL1 OL2

OC697 B-15 31 10274012 41F

HV-15768 7 31

HV-15768 15 34

ZS-8 TS-17 33

HS-15768 16 HV-15768 OB 12F

11F 10274012 SP1 11F 10274012 S1 3C 10274012 S2

1C66181 TB-A30 1C601 P/J297-L 11F 2F 1C601 1-90

63X8-M2 K598 (E-184 SH 11) CLOSES ON LOCA 6b 6a HS-15768 CLOSE 1a 1b HS-15768 OPEN

1C66183 TB-A29 1C601 P/J297-U 1F 1C601 55-5S

10274012 1F 10 1C 2C 3C

ZS-4 7 8 9 36

ZS-5 HV-15768 10 35 TS-18

1C66183 TB-A34 1C601 P/J297-(A) 21R 21R 10274012 SP2

63X8-K598 (E-184 SH 1) M3 OPENS ON LOCA 1C601 55-5U

1C66183 TB-A31 T3 11R 1C601 P/J297-K

HS-15768 CLOSE 5a 5b 1C601 55-5W 2R 10274012 2R

HS-15768 OPEN 2a 2b 1C601 55-5T 1R 10274012 1A 20 1C 10 20 30

HV-15768 6 13

ZS-3 ZS-7

HV-15768 5 HV-15768 14

13R 10274012 13A RA 0-10KΩ 10274012 23A NOTE 5

13R 10274012 13R RA 0-10KΩ 10274012 23R NOTE 5

3R 1C601 55-5A 3R 1C601 55-5B

A R

1C601 55-5Q N1 10274012 N1

10274012 AR1 74 10274012 AR2 LOSS OF CTL PWR CONTN MOV

1C601 F.V. A R SUPP POOL OB 150 HV5768 OPEN CLOSE

CONTACT BLOCK	CONTACT Nos	POSITION CLOSE	POSITION OPEN	DRAWING Nos	CONTACT BLOCK CAT. No
1	1a 1b	X		THIS SH	KL43
	2a 2b		X	THIS SH	
2	3a 3b		X	THIS SH	KL43
	4a 4b	X		THIS SH	

CONTROL SWITCH HS-15768
CUTLER HAMMER TYPE E-30 AC
MOMENTARY CONTACTS WITH MECHANICAL INTERLOCK

VALVE LIMIT SWITCH DEVELOPMENT

CONTACTS	100% OPEN	INTERMEDIATE	100% CLOSED	CONTACT USED
1a-1	1-0-1-2			SPARE
1a-2	1-0-1-2			SPARE
1a-3	1-0-1-2			THIS SH
1a-4	1-0-1-2			THIS SH
1a-5	1-0-1-2			THIS SH
1a-6	1-0-1-2			THIS SH
1a-7	1-0-1-2			THIS SH
1a-8	1-0-1-2			SPARE
1a-9	1-0-1-2			SPARE
1a-10	1-0-1-2			SPARE
1a-11	1-0-1-2			SPARE
1a-12	1-0-1-2			SPARE
1a-13	1-0-1-2			SPARE
1a-14	1-0-1-2			SPARE
1a-15	1-0-1-2			SPARE
1a-16	1-0-1-2			SPARE
1a-17	1-0-1-2			THIS SH
1a-18	1-0-1-2	OPEN ON MOM OPERATOR TORQUE		THIS SH
CONTACT CLOSED				

HV-15768

NOTES:
1. FOR STANDARD SYMBOLS FOR ELECTRICAL DWGS. SEE E-42.
2. ALL DEVICE NUMBERS TO BE SUFFIXED BY STARTER LOCATION NUMBER UNLESS OTHERWISE NOTED.
3. DESIGN BASED ON LOGIC DIAGRAM J-157 AND W/P-8856-E121-20(23).
4. FOR SPACE HEATER REFER TO DWG #E-241
5. FIELD TO REPLACE WITH 0-10 K OHM VARIABLE RESISTORS AND ADJUST TO 24V ACROSS THE LIGHT CIRCUIT.

CONTAINMENT ATMOSPHERIC CONTROL ISOLATION VALVE HV-15768 II

SCHEME 104170

10274012 250VDC CC 10274 CUB 012 → A1,A2,F1,S1,S2(F) 011 → HV-15768

1C601-20C REACTOR CORE COOLING SYS V.B. → 1F,1R,2F,2R,3A,3R,11F,21R,N1(C) L12 → 1F,11F,11R,21R (B01) PART OF GE CABLE 5201/E367-008 → 1C66183 ESS AUX V.B.

10274012 250VDC CC 10274 CUB 012 → 11F,12F,13A,13R,21R,31,P1(E) L07 → HV-15768

31,P1(F) L02 → 0C697 MOTOR OL BYPS CTL PNL

F/C FP F/C FK

REFERENCE DWG'S.	
BECHTEL NO.	PL. NO.
E-42	A-107191
J-157	B-103447
E-184	D-107333
E-185	D-107334
E-244	D-107320

Docket # 50-387
Control # 8305220117
Date 3/10/83 of Document:
REGULATORY DOCKET FILE

NO.	DATE	REVISIONS	BY	CHK'D	SUPV	ENG'R	ENGR
A	7/1/81	REVISED TO INCORP. FCR E-10560 FOR E-10619	VA				
A	12/31/81	ISSUED "AS BUILT." REVD MOTOR RATING (DCR 42)	BG				
A	4/13/82	DELETED DCP 538 IE REV 1: PER STR-2498	CLN				
A	7/30/82	REVISED PER DCP 538 IE REV 1 AND E-10560	BG				
A	7/1/85	REVISED AS SHOWN (REDRAWN)	AM				
A	9-10-85	ISSUED FOR CONSTRUCTION	AM				

SCALE NONE | DESIGNED R. VRUSE | DRAWN

PENNSYLVANIA POWER & LIGHT COMPANY
ALLENTOWN, PENNSYLVANIA
SUSQUEHANNA STEAM ELECTRIC STATION – UNIT 1, UNIT 2

BECHTEL – SAN FRANCISCO

SCHEMATIC DIAGRAM
CONTAINMENT ATMOSPHERIC CONTROL-
CONTN. OUTBD. ISOL. VLV. UNIT 1

JOB No. 8856 | DRAWING No. E-171 SH 6 | REV. 12

D-107320 SH 6

G1T01 SCHEM CONTN ATMOS CONT VLV W

PRC APERTURE CARD

UNCONTROLLED DOCUMENT FOR REFERENCE ONLY

THIS DOCUMENT IS UNDER NSS ADMINISTRATIVE CONTROL. NO CHANGES CAN BE MADE WITHOUT PRIOR NSS APPROVAL.

COMMONWEALTH OF PENNSYLVANIA REGISTERED PROFESSIONAL EDWARD K. KANG REGISTERED 17530-E ENGINEER

Edward K. Kang 1/4/85

24X RHEY MRG-1

This drawing and the design it covers are the property of BECHTEL. They are merely loaned and on the borrower's express agreement that they will not be reproduced, copied, loaned, exhibited, nor used except to the limited way and private use permitted by any written consent given by the lender to the borrower.

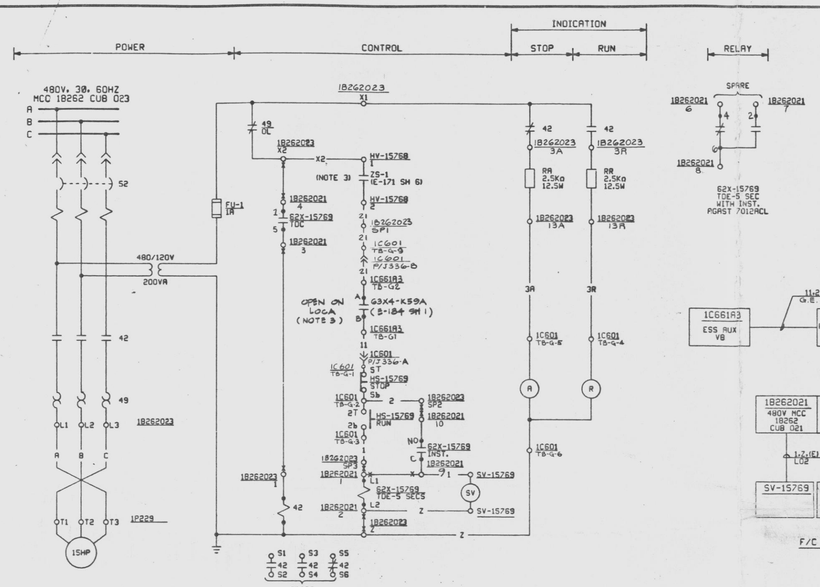

SUPPRESSION POOL WATER FILTER PUMP 1P229

SCHEME 104176

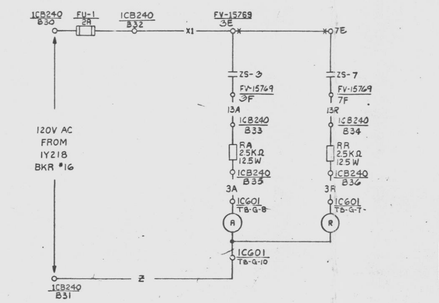

SUPPRESSION POOL WATER FILTER PUMP VLV INDICATION

SCHEME 104177

BLOCK NO.		CONTACT NO.		POSITION STOP	POSITION RUN	DRAWING NO.	CONTACT BLOCK NO.
STOP	1	1T 01b	1	X		SPARE	KLA3
RUN		2T 02b	2		X	THIS SH	
STOP	5	5T 05b	5		X	THIS SH	KLA3
		6T 06b	6	X		SPARE	

1CG01
F.V.

CONTROL SWITCH: HS-15769
CUTLER HAMMER TYPE E-30 AB
MOMENTARY CONTACTS

VALVE LIMIT SWITCH DEVELOPMENT

MARKER	CONTACT	100% OPEN	INTERMEDIATE	100% CLOSED	CONTACT USED
OPEN (UPPER)	59-1 A				SPARE
	59-2 C				SPARE
	59-3 E				THIS SH
	59-4 G				SPARE
CLOSE (LOWER)	59-5 A				SPARE
	59-6 C				THIS SH
	59-7 E				SPARE
	59-8 G				SPARE

CONTACT CLOSED

FV-15769

PRC APERTURE CARD

UNCONTROLLED DOCUMENT FOR REFERENCE ONLY

NOTES:
1. FOR STANDARD SYMBOLS FOR ELECTRICAL DWGS. SEE E-42.
2. ALL DEVICE NUMBERS TO BE SUFFIXED BY STARTER LOCATION NUMBER UNLESS OTHERWISE NOTED.
3. NON-CLASS 1E WIRING TO BE SEPARATED FROM CLASS 1E WIRING BY BARRIER.
4. DESIGN BASED ON LOGIC DIAGRAM J-157.

Document #50-387
Control #8302220117-169
Date 2/10/83 of Document:
REGULATORY DOCKET FILE

THIS DOCUMENT IS UNDER PP&L ADMINISTRATIVE CONTROL. NO CHANGES CAN BE MADE WITHOUT PRIOR PP&L APPROVAL.

THIS DRAWING IS ACR RELATED AND SHALL NOT CONTAIN ACR CHANGES SINCE DESIGN FREEZE REV. 2.

REFERENCE DWG'S.

BECHTEL NO.	PL. NO.
E-42	A-107131
J-157	B-103447
E-184	D-107333

No.	DATE	REVISIONS	BY	CHK.	DESIGN DUP'T	ENG'G	PROJ'S MGR.	APP'S
6	11/4/91	DELETED MOTOR SPACE HEATER & CABLE "H"	CW	CW	JB CW			
5	10/3/91	ISSUED "AS BUILT,"	CWF	JJH	JB CW			
4	4/9/91	REVISED PER PER E-39667	EAR	RC	JB CW			
3	2/26	INCORP IDCN #1R (DCP 8054, REV 0)	JJH	VCS	JB CW			
2	11/4/90	MEV CABLE 1Q1176C WIRE NO.	MTC	CW	JB CW			
1	5/16/90	ISSUED FOR CONSTRUCTION	MT	M.T.	JB CW			

SCALE NONE | DESIGNED A. VRUSE | DRAWN | CHIEF ENGR.

PENNSYLVANIA POWER & LIGHT COMPANY
ALLENTOWN, PENNSYLVANIA
SUSQUEHANNA STEAM ELECTRIC STATION - UNIT 1, UNIT 2

BECHTEL - SAN FRANCISCO

SCHEMATIC DIAGRAM SUPPRESSION POOL WATER FILTER PUMP UNIT 1

JOB No.	DRAWING No.	REV.
8856	E-171 SH 7	9

D-107320 SH 7

EDWARD K. KANG
REGISTERED PROFESSIONAL ENGINEER
17384
COMMONWEALTH OF PENNSYLVANIA

G1T01 SCHEM SUPP POOL FILTER PP 1

24X

RHEY

D

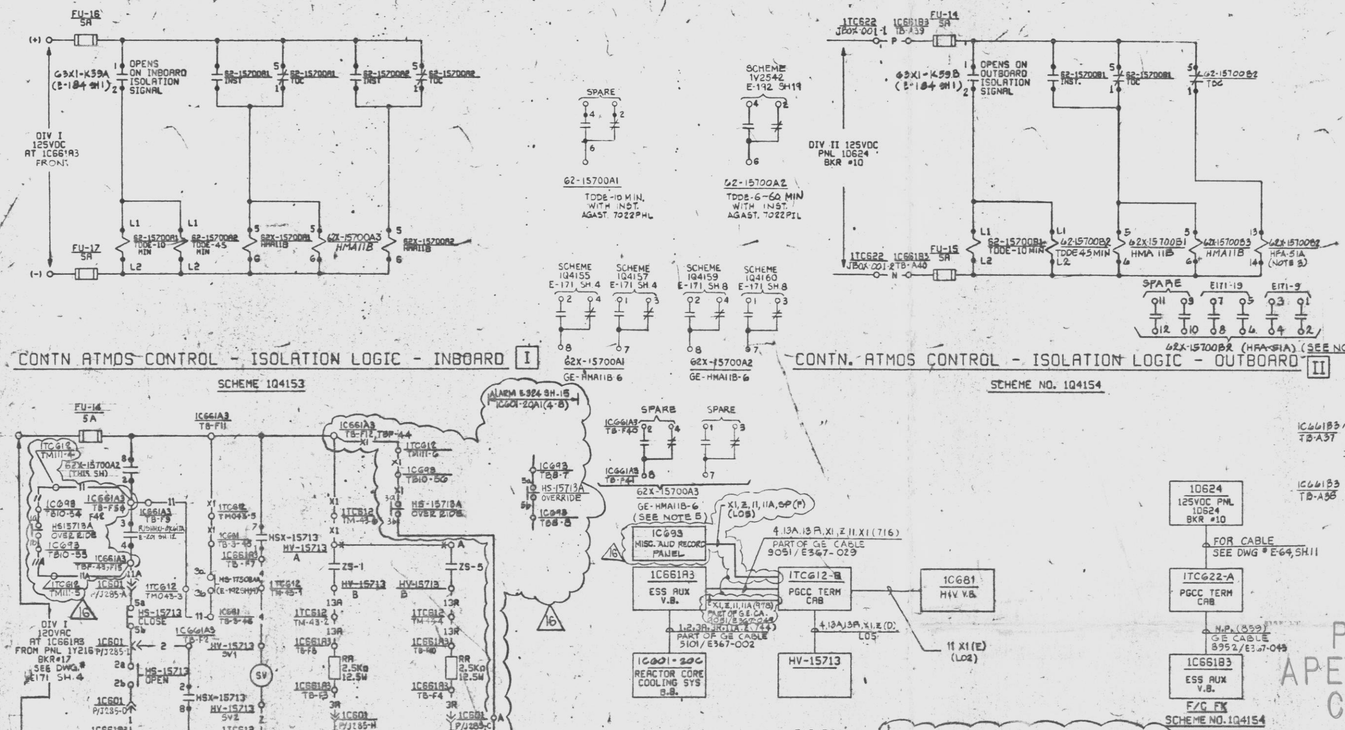

CONTACT NO.			POSITION CLOSE	POSITION OPEN	DRAWING NO.	CONTACT BLOCK NO.
OPEN BLOCK NO. 1	1a	1b	X		SPARE	KLA3
	2a	2b		X	THIS SH	
CLOSE BLOCK NO. 5	5a	5b		X	THIS SH	KLA3
	6a	6b	X		SPARE	

NOTES:

1. FOR STANDARD SYMBOLS FOR ELECTRICAL DWGS. SEE E-42.
2. DESIGN BASED ON LOGIC DIAGRAM J-157-12.
3. FIELD TO PURCHASE & INSTALL RELAY 62X-15700B2 GE TYPE 12HFA51A42 CODE #58 (RELAY 62-15700B2 AGAST 7022P1L REF E40 SH 5F.
4. FIELD TO PURCHASE & INSTALL RELAY 62X-15700A3, 62X-15700B3 GE TYPE HMA11B-6. REF E40 SH 5J.
5. CAUTION: DO NOT USE N.C. CONTACT OF THIS RELAY FOR CONTROL CIRCUIT INTERLOCK.

| TABLE C | | |

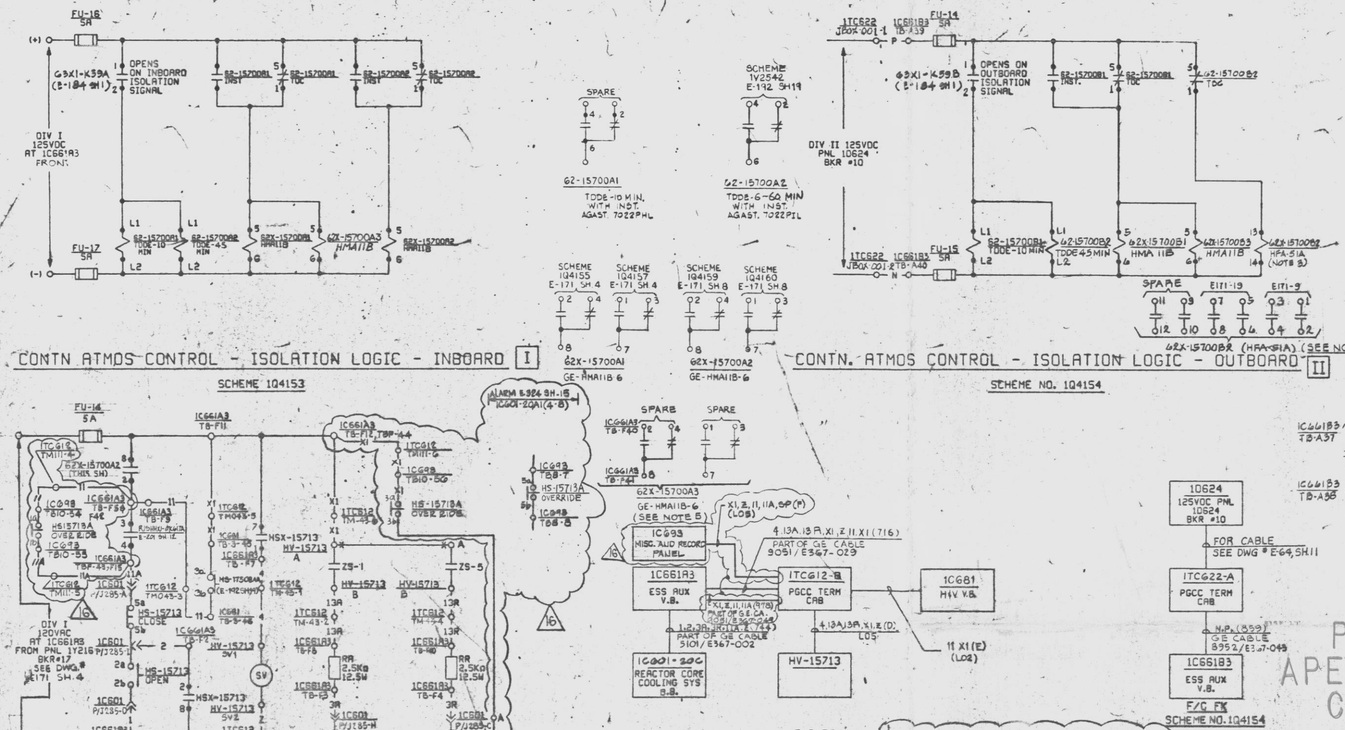

CONTACT NO.			POSITION CLOSE	POSITION OPEN	DRAWING NO.	CONTACT BLOCK NO.
OPEN BLOCK NO. 1	1a	1b	X		SPARE	KLA3
	2a	2b		X	THIS SH	
CLOSE BLOCK NO. 5	5a	5b		X	THIS SH	KLA3
	6a	6b	X		SPARE	

NOTES:

1. FOR STANDARD SYMBOLS FOR ELECTRICAL DWGS. SEE E-42.
2. DESIGN BASED ON LOGIC DIAGRAM J-157-12.
3. FIELD TO PURCHASE & INSTALL RELAY 62X-15700B2 GE TYPE 12HFA51A42 CODE #58 (RELAY 62-15700B2 AGAST 7022P1L REF E40 SH 5F.
4. FIELD TO PURCHASE & INSTALL RELAY 62X-15700A3, 62X-15700B3 GE TYPE HMA11B-6. REF E40 SH 5J.
5. CAUTION: DO NOT USE N.C. CONTACT OF THIS RELAY FOR CONTROL CIRCUIT INTERLOCK.

| TABLE C | | |

This drawing and the design it covers are the property of BECHTEL. They are merely loaned and on the borrower's express agreement that they will not be reproduced, copied, loaned, exhibited, nor used except in the limited way and private use permitted by any written consent given by this border to the borrower.

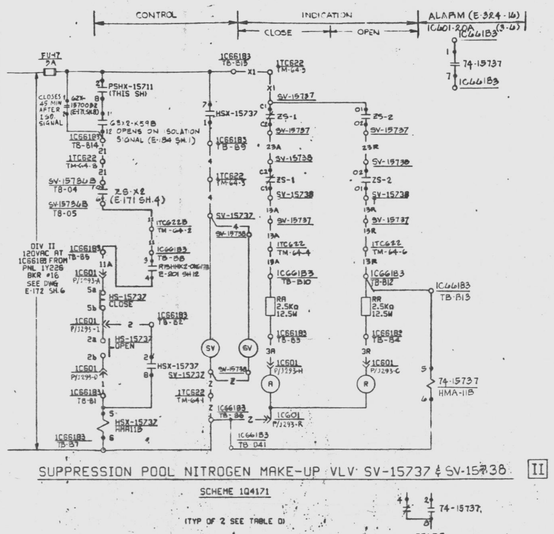

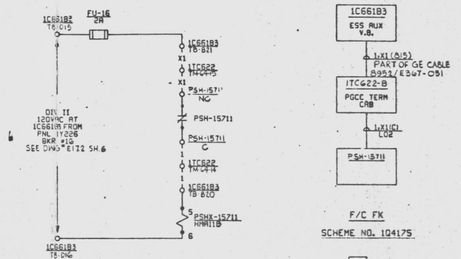

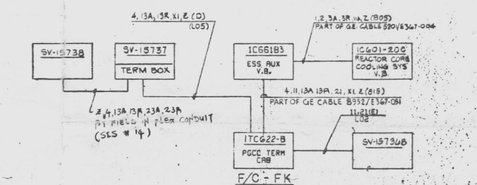

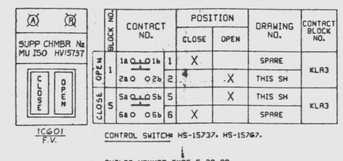

BLOCK NO.		CONTACT NO.		POSITION CLOSE	POSITION OPEN	DRAWING NO.	CONTACT BLOCK NO.
OPEN	1	1a 1b	1	X		SPARE	KLA3
		2a 2b	2		X	THIS SH	
CLOSE	5	5a 5b	5		X	THIS SH	KLA3
		6a 6b	6	X		SPARE	

SOL VALVE LIMIT SWITCH DEVELOPMENT			
CONTACT	100% OPEN	100% CLOSED	CONTACT ISSUED
ZS-1		X	THIS SH
ZS-2	X		THIS SH

SV-15737 & SV-15767 V/P 8856-J70-16 (1) & (2)
SV-15738 & SV-15768 V/P 8856-J70-16 (1) & (2)

TABLE D

POWER SUPPLY	SCHEME NO.	F/C	ESS DIV	VALVE	SERVICE	CONTROL SWITCH	FUSE NO.	ISOLATION SIGNAL (E-184 SH.1) (E-171 SH.8)	INTERLOCK LOCATION	AUX RELAY	RCR PNL / RELAY PNL / PGCC	TERMINATIONS	LINE CODE	NAME PLATE	ALARM (RELAY) CONTACT NO.
(Y22G16-G (E172 SH.6)	104171	FK	II	SV-15737	SUPP POOL N2 MU VLV	HS-15737	FU-17	69X2-K55B 62X-B700B2	SV-15736B E171 SH.4	HSX-15737	1C601-20C	P2-135 -5D -7 -H -C +A-X B1 B2 B3 B4 B5 B6 B7 TB-041 B8 B9 B10 B11 B12 B13 B14 B15 B16	805 B08 B16 B13	SUPP CHMBR N2 MU ISO HV-15737	74-15737
				SV-15738						PSHX-15711 (CONT 2-8)	ITCG22-B			SUPP CHMBR N2 MU ISO HV-15738	
	104172	FK	II	SV-15767	DRYWELL N2 MU VLV	HS-15767	FU-18	69X2-K55B 62X-B700B2	SV-15776B E171 SH.9	HSX-15767	1C601-20C	P2-135 -5H -H -G -E +W-Y B22 B27 B28 B29 B30 B31 B32 TB-042 B33 B34 B35 B36 B37 B38 B39 B40 B41	805 B08 B16 B13	CONTN N2 MAKEUP ISO HV-15767	74-15767
				SV-15768						PSHX-15711 (CONT 1-7)	ITCG22-B			CONTN N2 MAKEUP ISO HV-15768	

HI RAD SIGNAL E-201 SH.12
RISHHX2-OK517B
RISHHX2-OK617B

REFERENCE DWG'S.	
BECHTEL NO.	PL. NO.
E-42	A-107131
J-157	B-103447
E-184	D-107533
E-185	D-107534
E-40	A-107133
V/P 8856-J70	PF104700

No.	DATE	REVISIONS	BY	CHK	DESIGN ENG'G	PROJ ENG'G	APP'D
15	9/4/91	REV'D PER DCP 538.1E REV. 11	TJ	JWT	TJ		
14	9/4/91	ISSUED "AS BUILT."	TJ	WN	TJ		
13	9/4/91	REV TO INCORP FCR E-10918	KS	RM	NL		
12	7/1/91	REV'D TO INCORPORATE FCR-E-10835	JDM	JWT	TJ		
11	8/4/91	DELETED DCP 538.1E REVS 8 & 9 SUP. 2&3 & INCORP FCR-E-2379	CAN	WN	TJ		
10	7/24/91	ISSUED FOR CONSTRUCTION	AN	RM	NL		

SCALE: NONE | DESIGNED: R. VALISE | DRAWN: | CHK'D

PENNSYLVANIA POWER & LIGHT COMPANY
ALLENTOWN, PENNSYLVANIA
SUSQUEHANNA STEAM ELECTRIC STATION - UNIT 1, UNIT 2

BECHTEL - SAN FRANCISCO

SCHEMATIC DIAGRAM
CONT. ATMOS. CONTROL
NITROGEN MAKE-UP VALVES
UNIT 1

JOB No.	DRAWING No.	REV.
8856	E-171 SH 9	15

D-107320 SH 9

NOTES:
1. FOR STANDARD SYMBOLS FOR ELECTRICAL DWGS. SEE E-42.
2. DESIGN BASED ON LOGIC DIAGRAM J-157-11
3. FIELD TO PURCHASE 4 INSTALL RELAYS 74-15737 & 74-15767 GE TYPE 12HMA-11BH, REF. 5.40 SH 51
4. CAUTION DO NOT USE N.C. CONTACT OF THIS RELAY FOR CONTROL CIRCUIT INTERLOCK.

Doc'mt # 50-387
Contrl # 5300220117-171
Date 5/1088 of Document:
REGULATORY DOCKET FILE

UNCONTROLLED DOCUMENT FOR REFERENCE ONLY

THIS DOCUMENT IS UNDER PPL'S ADMINISTRATIVE CONTROL. NO CHANGES CAN BE MADE WITHOUT PRIOR PPL APPROVAL.

EDWARD K. KANG
REGISTERED PROFESSIONAL ENGINEER
APPROVED 17534
COMMONWEALTH OF PENNSYLVANIA

DIFDI SCHEM NB MAKE-UP VALVES N

PRC APERTURE CARD

24X

I certify that the microfilmed image contained on this microform were made in the normal and regular course of business. This is a true, full, correct and complete reproduction and replacement for and/or in lieu of original documents generated by the Bechtel group of companies.
Signed: ZAC12700 Date: Camera Type: MKII 1
Camera Operator

D

This drawing and the design it covers are the property of BECHTEL. They are merely loaned and on the borrower's express agreement that they will not be reproduced, copied, loaned, exhibited, nor used except in the manner way and private use permitted by and unless secured given by the Bechtel to the borrower.

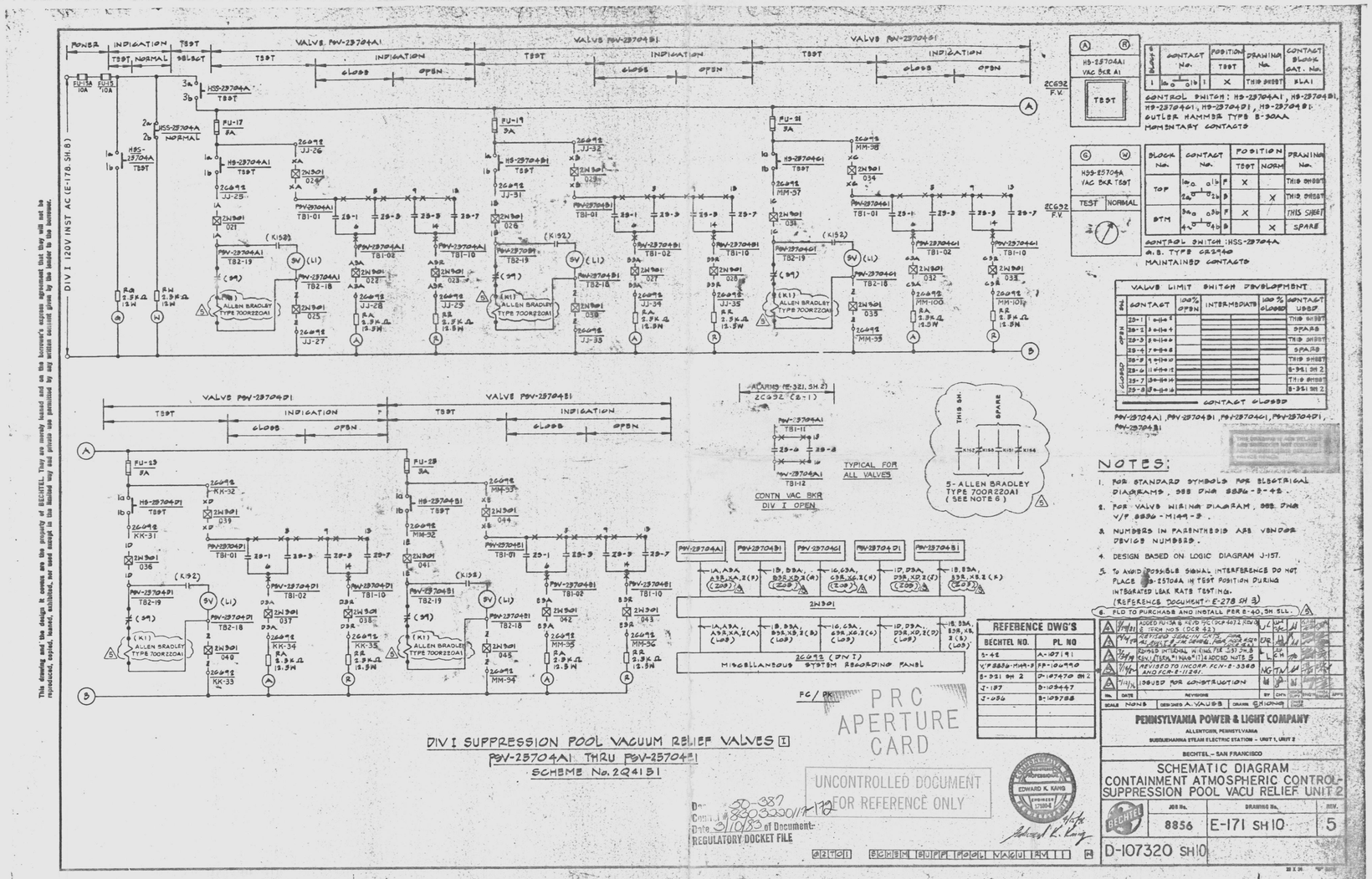

This drawing and the design it covers are the property of BECHTEL. They are merely loaned and on the borrower's express agreement that they will not be reproduced, copied, loaned, exhibited, nor used except in the limited way and private use permitted by any written consent given by the lender to the borrower.

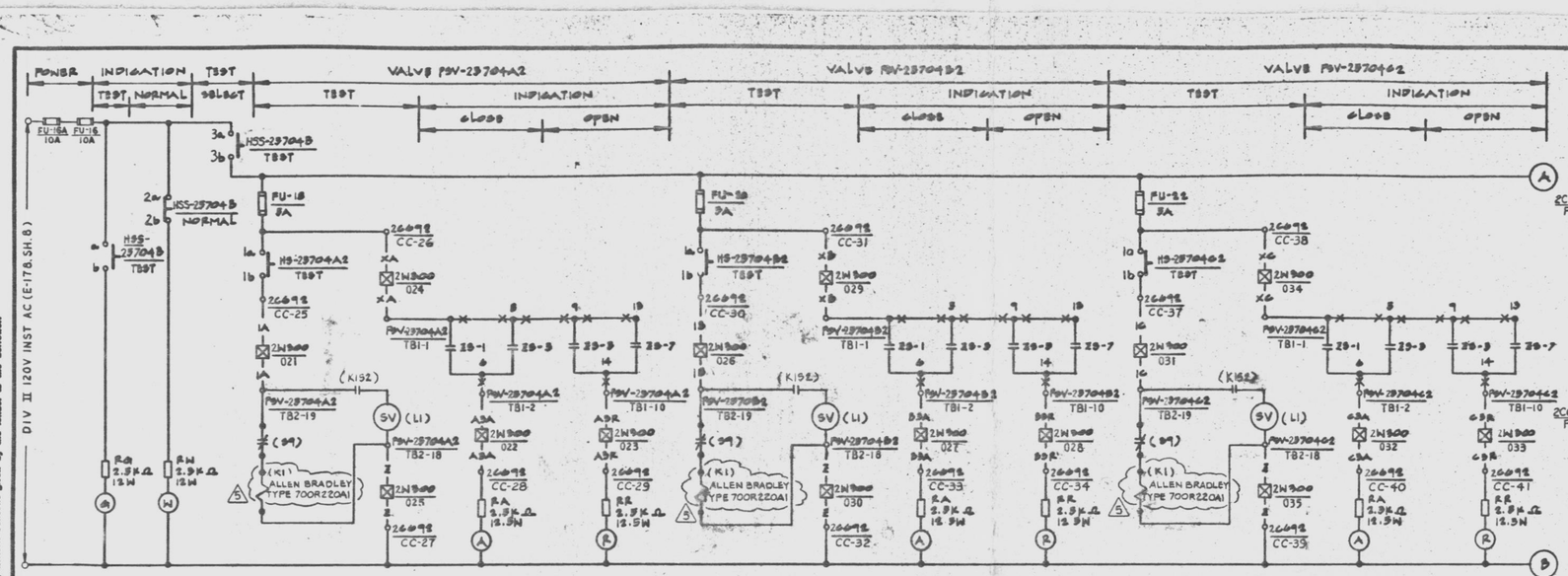

BLOCK No.	CONTACT No.	POSITION TEST	DRAWING No.	CONTACT BLOCK CAT. No.
1	1a o o 1b	X	THIS SHEET	9LA1

CONTROL SWITCH: HS-2570402, HS-2570452
HS-2570462, HS-2570403, HS-2570453
BUTLER HAMMER TYPE B-30AA
MOMENTARY CONTACTS

BLOCK No.	CONTACT No.	POSITION TEST	POSITION NORM	DRAWING No.
TOP	1a o o 1b	F X		THIS SHEET
	2a o o 2b	B	X	THIS SHEET
BTM	3a o o 3b	F X		THIS SHEET
	4a o o 4b	B	X	SPARE

CONTROL SWITCH: HSS-2570403
A.B. TYPE CR2940
MAINTAINED CONTACTS

VALVE LIMIT SWITCH DEVELOPMENT

SAL	CONTACT	100% OPEN	INTERMEDIATE	100% CLOSED	CONTACT USED
OPEN	29-1	1 o-o 6			THIS SHEET
	29-2	3 o-o 4			SPARE
	29-3	5 o-o 6			THIS SHEET
	29-4	7 o-o 8			SPARE
CLOSED	29-5	9 o-o 10			THIS SHEET
	29-6	11 o-o 12			E-321 SH 2
	29-7	13 o-o 14			THIS SHEET
	29-8	15 o-o 16			E-321 SH 2

CONTACT CLOSED

PSV-2570402, PSV-2570452, PSV-2570462, PSV-2570403, PSV-2570453

THIS DRAWING IS ACR RELATED AND CONTAINS NOT CONTAINS ACR CHANGES SINCE PREVIOUS FREEZE. REV. 02

NOTES:

1. FOR STANDARD SYMBOLS FOR ELECTRICAL DIAGRAMS, SEE DWG 8856-E-42.
2. FOR VALVE WIRING DIAGRAM, SEE DWG V/F 8856-M149-3
3. NUMBERS IN PARENTHESIS ARE VENDOR DEVICE NUMBERS.
4. DESIGN BASED ON LOGIC DIAGRAM J-157.
5. TO AVOID POSSIBLE SIGNAL INTERFERENCE DO NOT PLACE HSS-2570403 IN TEST POSITION DURING INTEGRATED LEAK RATE TESTING. (REFERENCE DOCUMENT: E-278 SH 3)
6. FLD TO PURCHASE AND INSTALL PER E-40, SH 5LL

REFERENCE DWG'S.	
BECHTEL NO.	PL. NO.
8-42	A-107191
V/F 8856-M149-3	PP-106990
8-321 SH 2	D-107470 SH 2
J-157	B-103447
J-036	B-103788

NO.	DATE	REVISIONS	BY	CHK'D	ENG'G SUPV	PROJ ENGR	APP'D
A	9/9/80	ADDED FU-18A & REVD F/C LDCF 407.2 REV. 0 & TERM NOS (DCR 42)	LL				
A	10/24/80	REVD SCHEM CKTS. FOR A3-BWLR & SU DEVELOPMENT TEST PROGRAM PER DCR 50	CAR				
A	3/24/81	REV. INTERNAL WIRING PER J-157 SH. 8 REV. 1 (TERM. NOS W/S977) & ADDED NOTE 5	L.				
A	11/16/81	REVISED TO INCORP. FCN-E-3368 AND FCR-E-11241.	RBL				
A	4/13/82	ISSUED FOR CONSTRUCTION	AV				

SCALE NONE | DESIGNED A. VAUSS | DRAWN CHIONG | CHIEF ENGR.

PENNSYLVANIA POWER & LIGHT COMPANY
ALLENTOWN, PENNSYLVANIA
SUSQUEHANNA STEAM ELECTRIC STATION - UNIT 1, UNIT 2

BECHTEL - SAN FRANCISCO

SCHEMATIC DIAGRAM CONTAINMENT ATMOSPHERIC CONTROL-SUPPRESSION POOL VACU RELIEF UNIT 2

JOB No.	DRAWING No.	REV.
8856	E-171 SH11	5

D-107320 SH 11

DIV II SUPPRESSION POOL VACUUM RELIEF VALVES II

PSV-2570402 THRU PSV-2570452

SCHEME No. 2Q4152

EDWARD K. KANG — REGISTERED PROFESSIONAL ENGINEER — COMMONWEALTH OF PENNSYLVANIA — 17530-E

4/15/82

UNCONTROLLED DOCUMENT FOR REFERENCE ONLY

PRC APERTURE CARD

Docket #50-387
Control #8303220117 1 of 3
Date 3/10/83 of Document:
REGULATORY DOCKET FILE

24X

I certify that the microfilmed image contained on this microform were made in the normal and regular course of business. This is a true, full, correct and complete reproduction, and replacement for and/or in lieu of original books and records of the Bechtel group of companies.
DANNY 9-17-82 Camera Type MRG1

D

This drawing and the design it covers are the property of BECHTEL. They are merely loaned and on the borrower's express agreement that they will not be reproduced, copied, loaned, exhibited, nor used except in the limited way and private use permitted by any written consent given by the holder to the borrower.

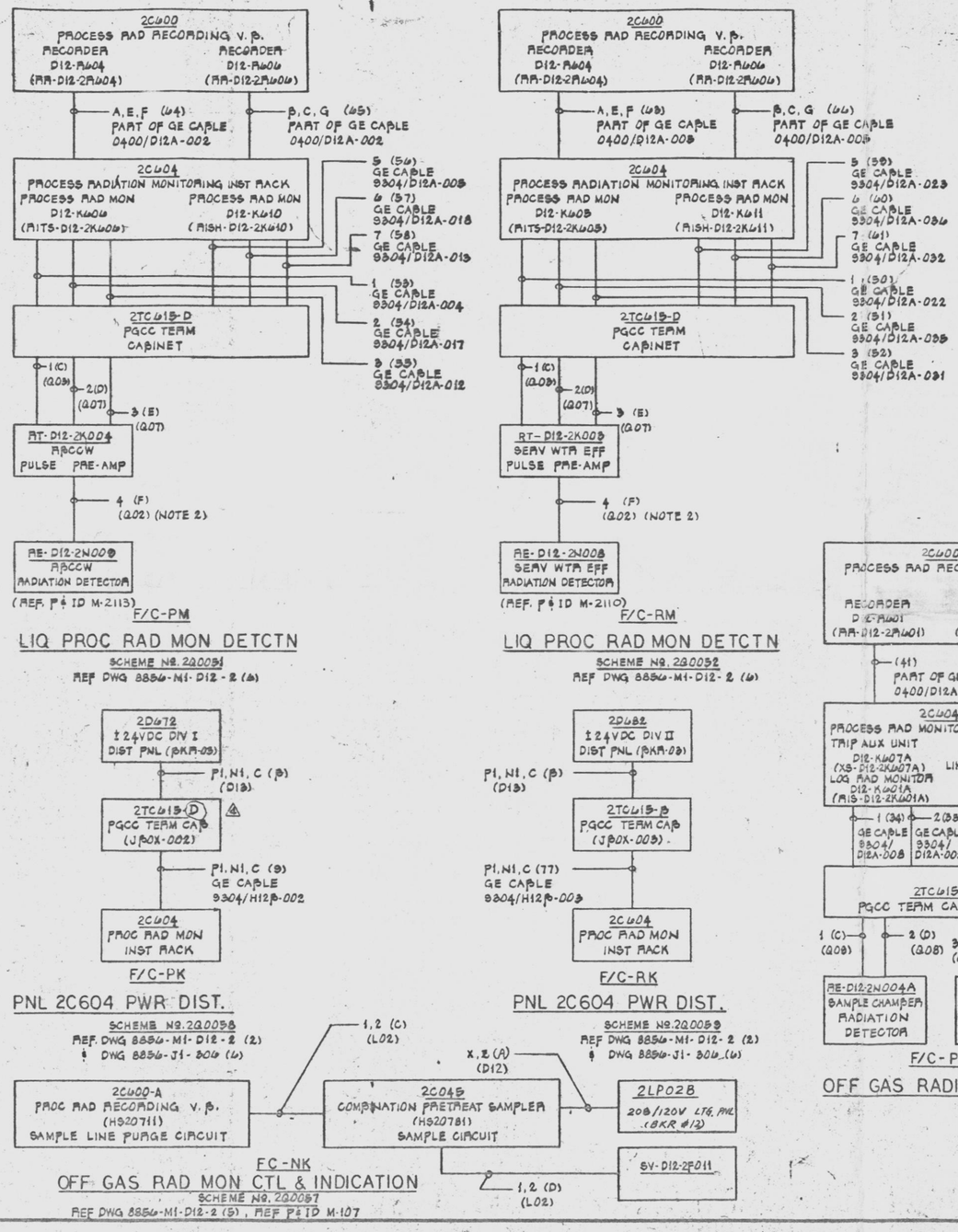

NOTES:

1. FOR STANDARD SYMBOLS FOR ELECTRICAL DIAGRAM SEE DWG E-42.
2. CABLES ARE ROUTED IN METALLIC CONDUITS.
3. DESIGN BASED ON GE/APED ELEMENTARY 781E416AE V/P 8856-M1-D12-2).
4. FOR 120VAC POWER TO 2C600 REF DWG. E-64, SH. 27.
5. FOR 125VDC POWERS TO 2C604 REF DWG E-64, SH 23 & 24.
6. FOR RPS BUS A & BUS B 120VAC POWER TO 2C606 REF DWG E-157 SH. 4.
7. FOR RPS BUS A & BUS B 120VAC POWER TO 2C633 REF. DWG E-157 SH. 4.

PRC APERTURE CARD

REFERENCE DWG'S.	
BECHTEL NO.	PL NO.
E-42	A-107191
E-26	E-107175
8856-M1-D12-2	FF-129310
E-64	D-107213
E-157	D-107306
M-2113	E-105913
M-2112	E-105912
M-2107	E-105907
M-2110	E-105910
M-2139	E-105939

REV.	DATE	REVISIONS	BY	CHK	DESIGN SUPV.	ENGR	PROJ. ENGR	APP'D
4	9/24/84	INCORR. FCR. E-6904	VAK	GS	AA			
3	9/4/84	REV PER SCR-958, REV 2TC624-D & 2TC615-D (DCR 95)	JL	DFC VAK	AA			
2	7/19/84	ADDED CABLES, SYMBOLS, NOTES & REVISED E.M. 84 AND ADDED LOC NO. PER DCR #59	SM	MB	AA			
1	3/16/84	REVISED NOTE 5 (DCR #8)	SM	MB	DR			
0	11/4/83	ISSUED FOR CONSTRUCTION	MB	DR	AA			

SCALE: NO | DESIGNED J. BURADA | DRAWN M. SANTOS

PENNSYLVANIA POWER & LIGHT COMPANY
ALLENTOWN, PENNSYLVANIA
SUSQUEHANNA STEAM ELECTRIC STATION – UNIT 1, UNIT 2
BECHTEL – SAN FRANCISCO

BLOCK DIAGRAM
PROCESS RADIATION MON SYS
UNIT 2

JOB No.	DRAWING No.	REV.
8856	E-176 SH 2	4

D-107325 SH2

Docket # 50-387
Control # 8303220117-17
Date 3/10/83 of Document
REGULATORY DOCKET FILE

UNCONTROLLED DOCUMENT
FOR REFERENCE ONLY

G2T55 PLK DIAG PROC RAD MON SYS W

24X

I certify that this microfilmed image contained on this microform were made in the normal and regular course of business. This is a true, full, correct and complete reproduction and replacement for and/or in lieu of original documents generated by the Bechtel group of companies.
Signed JACINTO Date 7-2-83 Camera Type MRG I
Camera Operator

D

This drawing and the design it covers are the property of BECHTEL. They are not to be reproduced, copied, loaned, exhibited, nor used except in the limited way and private use permitted by any written consent given by the lender to the borrower.

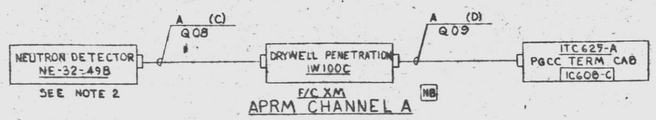

TYPICAL OF 129
REF W/P 8856-M1-C51-19 SH.11

NMS SEPARATION NB — F/C XM

SCHEME Nº	NEUTRON DETECTOR	CORE COORDINATES	APRM CHAN	DRYWELL PEN.	PGCC TERM.CAB
1Q1000	NE-32-49B	32-49	A	1W100C	ITC625A
1Q1001	NE-16-33B	16-33			
1Q1002	NE-48-33B	48-33			
1Q1003	NE-32-17B	32-17			
1Q1004	NE-16-49D	16-49			
1Q1005	NE-48-49D	48-49			
1Q1006	NE-32-33D	32-33			
1Q1007	NE-16-17D	16-17			
1Q1008	NE-48-17D	48-17			
1Q1009	NE-24-57A	24-57			
1Q1010	NE-08-41A	08-41			
1Q1011	NE-40-41A	40-41			
1Q1012	NE-24-25A	24-25			
1Q1013	NE-56-25A	56-25			
1Q1014	NE-40-09A	40-09			
1Q1015	NE-40-57C	40-57			
1Q1016	NE-24-41C	24-41			
1Q1017	NE-56-41C	56-41			
1Q1018	NE-08-25C	08-25			
1Q1019	NE-40-25C	40-25			
1Q1020	NE-24-09C	24-09			
1Q1021	NE-08-49B	08-49	B	1W100C	ITC625A
1Q1022	NE-40-49B	40-49			
1Q1023	NE-24-33B	24-33			
1Q1024	NE-56-33B	56-33			
1Q1025	NE-08-17B	08-17			
1Q1026	NE-40-17B	40-17			
1Q1027	NE-24-49D	24-49			
1Q1028	NE-08-33D	08-33			
1Q1029	NE-40-33D	40-33			
1Q1030	NE-24-17D	24-17			
1Q1031	NE-56-17D	56-17			
1Q1032	NE-32-57A	32-57			
1Q1033	NE-16-41A	16-41			
1Q1034	NE-48-41A	48-41			
1Q1035	NE-32-25A	32-25			
1Q1036	NE-16-09A	16-09			
1Q1037	NE-48-09A	48-09			
1Q1038	NE-16-57C	16-57			
1Q1039	NE-32-41C	32-41			
1Q1040	NE-16-25C	16-25			
1Q1041	NE-48-25C	48-25			
1Q1042	NE-32-09C	32-09			

NMS SEPARATION NC — F/C VM

SCHEME Nº	NEUTRON DETECTOR	CORE COORDINATES	APRM CHAN	DRYWELL PEN.	PGCC TERM.CAB
1Q1043	NE-24-57B	24-57	C	1W100D	ITC625D
1Q1044	NE-08-41B	08-41			
1Q1045	NE-40-41B	40-41			
1Q1046	NE-24-25B	24-25			
1Q1047	NE-56-25B	56-25			
1Q1048	NE-40-09B	40-09			
1Q1049	NE-40-57D	40-57			
1Q1050	NE-24-41D	24-41			
1Q1051	NE-56-41D	56-41			
1Q1052	NE-08-25D	08-25			
1Q1053	NE-40-25D	40-25			
1Q1054	NE-24-09D	24-09			
1Q1055	NE-16-49A	16-49			
1Q1056	NE-48-49A	48-49			
1Q1057	NE-32-33A	32-33			
1Q1058	NE-16-17A	16-17			
1Q1059	NE-48-17A	48-17			
1Q1060	NE-32-49C	32-49			
1Q1061	NE-16-33C	16-33			
1Q1062	NE-48-33C	48-33			
1Q1063	NE-32-17C	32-17			
1Q1064	NE-32-57B	32-57	D	1W100D	ITC625D
1Q1065	NE-16-41B	16-41			
1Q1066	NE-48-41B	48-41			
1Q1067	NE-32-25B	32-25			
1Q1068	NE-16-09B	16-09			
1Q1069	NE-48-09B	48-09			
1Q1070	NE-16-57D	16-57			
1Q1071	NE-32-41D	32-41			
1Q1072	NE-16-25D	16-25			
1Q1073	NE-48-25D	48-25			
1Q1074	NE-32-09D	32-09			
1Q1075	NE-24-49A	24-49			
1Q1076	NE-08-33A	08-33			
1Q1077	NE-40-33A	40-33			
1Q1078	NE-24-17A	24-17			
1Q1079	NE-56-17A	56-17			
1Q1080	NE-08-49C	08-49			
1Q1081	NE-40-49C	40-49			
1Q1082	NE-24-33C	24-33			
1Q1083	NE-56-33C	56-33			
1Q1084	NE-08-17C	08-17			
1Q1085	NE-40-17C	40-17			

NMS SEPARATION NA — F/C UM

SCHEME Nº	NEUTRON DETECTOR	CORE COORDINATES	APRM CHAN	DRYWELL PEN.	PGCC TERM.CAB
1Q1086	NE-16-49B	16-49	E	1W100A	ITC625E
1Q1087	NE-48-49B	48-49			
1Q1088	NE-32-33B	32-33			
1Q1089	NE-16-17B	16-17			
1Q1090	NE-48-17B	48-17			
1Q1091	NE-32-49D	32-49			
1Q1092	NE-16-33D	16-33			
1Q1093	NE-48-33D	48-33			
1Q1094	NE-32-17D	32-17			
1Q1095	NE-40-57A	40-57			
1Q1096	NE-24-41A	24-41			
1Q1097	NE-56-41A	56-41			
1Q1098	NE-08-25A	08-25			
1Q1099	NE-40-25A	40-25			
1Q1100	NE-24-09A	24-09			
1Q1101	NE-24-57C	24-57			
1Q1102	NE-08-41C	08-41			
1Q1103	NE-40-41C	40-41			
1Q1104	NE-24-25C	24-25			
1Q1105	NE-56-25C	56-25			
1Q1106	NE-40-09C	40-09			
1Q1107	NE-24-49B	24-49	F	1W100B	ITC625B
1Q1108	NE-08-33B	08-33			
1Q1109	NE-40-33B	40-33			
1Q1110	NE-24-17B	24-17			
1Q1111	NE-56-17B	56-17			
1Q1112	NE-08-49D	08-49			
1Q1113	NE-40-49D	40-49			
1Q1114	NE-24-33D	24-33			
1Q1115	NE-56-33D	56-33			
1Q1116	NE-08-17D	08-17			
1Q1117	NE-40-17D	40-17			
1Q1118	NE-16-57A	16-57			
1Q1119	NE-32-41A	32-41			
1Q1120	NE-16-25A	16-25			
1Q1121	NE-48-25A	48-25			
1Q1122	NE-32-09A	32-09			
1Q1123	NE-32-57C	32-57			
1Q1124	NE-16-41C	16-41			
1Q1125	NE-48-41C	48-41			
1Q1126	NE-32-25C	32-25			
1Q1127	NE-16-09C	16-09			
1Q1128	NE-48-09C	48-09			

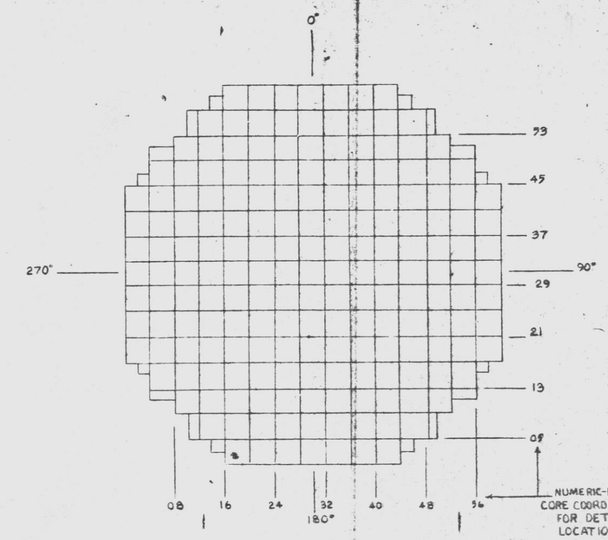

REACTOR CORE- TOP VIEW

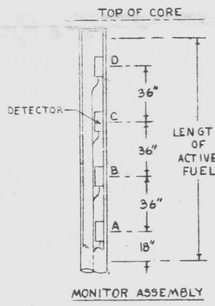

NOTES:

1. FOR STANDARD SYMBOLS FOR ELECTRICAL DIAGRAMS SEE 8856-E-42.
2. ALL INSTRUMENTS ON THIS DWG ARE MPL Nº. C51.
3. DESIGN BASED ON G.E. APED ELEMENTARY 731E411AE (W/P 8856-M1-C51-19) SH. 11, 13, 15 17, 19 & SH. 21.

Docket # 50-387
Control # 8305250117 -175
Date 5/10/83 of Document
REGULATORY DOCKET FILE

THIS DOCUMENT IS UNDER PP&L ADMINISTRATIVE CONTROL. NO CHANGES CAN BE MADE WITHOUT PRIOR PP&L APPROVAL.

REFERENCE DWG'S.	
BECHTEL NO.	PL. NO.
E-42	A-107191
8856-M1-C51	FF122010

NO.	DATE	REVISIONS	BY	CHK	DESIGN SUPV.	ENGR.	PROJ. ENGR.	APP'D
5	7/1/83	ISSUED "AS-BUILT"	UN	UN				
4	4/1/81	REVISED PER G.E. FITS REV. 5	C.H.	C.H.				
3	1/1/79	REVISED CABLE CODE D AND ADDED NOTE Nº. 3.	MPS	M.P.S. C.H.				
2	7/24/75	ISSUED FOR CONSTRUCTION	RC					
1	4/24/74	ISSUED FOR INFORMATION	R.R.					

SCALE NONE | DESIGNED A. VAUSE | DRAWN R. G.E. | CHIEF ENGR.

PENNSYLVANIA POWER & LIGHT COMPANY
ALLENTOWN, PENNSYLVANIA
SUSQUEHANNA STEAM ELECTRIC STATION – UNIT 1, UNIT 2
BECHTEL – SAN FRANCISCO

BLOCK DIAGRAM
NEUTRON MONITORING SYSTEM
UNIT 1

JOB No.	DRAWING No.	REV.
8856	E-177 SH 1	3

D-107326 SH1

GLT 40 BLK DIAG NEUTRON MON SYS 1 M

PRC APERTURE CARD

UNCONTROLLED DOCUMENT FOR REFERENCE ONLY

EDWARD K. KANS — REGISTERED PROFESSIONAL ENGINEER — COMMONWEALTH OF PENNSYLVANIA

Edward K. Kans 4/25/75

24X

I certify that the microfilmed image contained on this microform were made in the normal and regular course of business. This is a true, full, correct and complete reproduction and replacement for and/or in lieu of original documents prepared by the Bechtel group of companies.
Signature DANNY Camera Operator Date 4-15-82 Camera Type MRG 1

D

This drawing and the design it covers are the property of BECHTEL. They are merely loaned and on the borrower's express agreement that they will not be reproduced, copied, loaned, exhibited, nor used except in the limited way and private use permitted by any written consent given by the lender to the borrower.

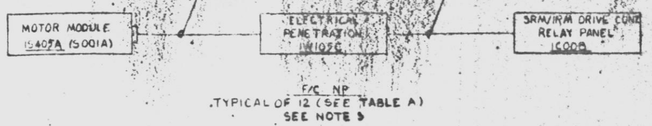

F/C NP
TYPICAL OF 12 (SEE TABLE A)
SEE NOTE 3

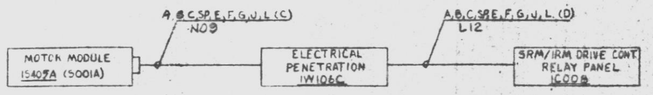

F/C NK
TYPICAL OF 12 (SEE TABLE A)
SEE NOTE 3

START-UP RANGE DETECTOR DRIVE 1540SA

SCHEME Nº 1Q1178

TYPICAL OF 12 (SEE TABLE A)
REF. V/P 8856-M1-C51-18 (2)

TABLE A

SCHEME NUMBER	DESCRIPTION	MOTOR MODULE	LAYOUT DRAWING NUMBER	ELECTRICAL PENETRATION POWER	ELECTRICAL PENETRATION CONTROL	SRM/IRM CHANNEL	RELAY PANEL
1Q1178	START-UP RANGE DETECTOR DRIVE 1540SA	1540SA	E26 SH 349	IW105C	IW106C	SRM A	1C00B
1Q1179	1540SB	1540SB		D	D	B	
1Q1180	1540SC	1540SC		D	D	C	
1Q1181	1540SD	1540SD		C	C	D	
1Q1182	1540SE	1540SE		C	C	IRM A	
1Q1183	1540SF	1540SF		D	D	B	
1Q1184	1540SG	1540SG		C	C	C	
1Q1185	1540SH	1540SH		D	D	D	
1Q1186	1540SJ	1540SJ		D	D	E	
1Q1187	1540SK	1540SK		C	C	F	
1Q1188	1540SL	1540SL		D	D	G	
1Q1189	1540SM	1540SM		C	C	H	

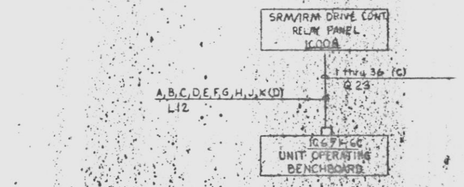

F/C NK

START-UP RANGE DETECTOR DRIVE POWER AND INDICATORS

SCHEME Nº 1Q1190
REF. V/P 8856-M1-C51-18 (2)

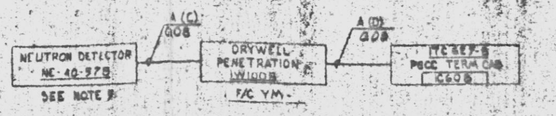

F/C YM

LPRM GROUP A

SCHEME Nº 1Q1129
TYPICAL OF 43 (SEE TABLE B)
REF. V/P 8856-M1-C51-19 SH.27 & 28

TABLE B

	SCHEME NR	NEUTRON DETECTOR	CORE COORDINATES	LPRM GROUP	DRYWELL PEN.	PGCC TERM CAB.
F/C YM / NMS SEPARATION NO	1Q1129	NE-40-57B	40-37	A	IW100B	1TC60B
	1Q1130	NE-24-41B	24-41			
	1Q1131	NE-56-41B	56-41			
	1Q1132	NE-08-25B	08-25			
	1Q1133	NE-40-25B	40-25			
	1Q1134	NE-24-09B	24-09			
	1Q1135	NE-24-57D	24-57			
	1Q1136	NE-08-41D	08-41			
	1Q1137	NE-40-41D	40-41			
	1Q1138	NE-24-25D	24-25			
	1Q1139	NE-56-25D	56-25			
	1Q1140	NE-40-09D	40-09			
	1Q1141	NE-32-49A	32-49			
	1Q1142	NE-16-33A	16-33			
	1Q1143	NE-48-33A	48-33			
	1Q1144	NE-32-17A	32-17			
	1Q1145	NE-16-49C	16-49			
	1Q1146	NE-48-49C	48-49			
	1Q1147	NE-32-33C	32-33			
	1Q1148	NE-16-17C	16-17			
	1Q1149	NE-48-17C	48-17			
F/C U/M / NMS SEPARATION NA	1Q1150	NE-16-57B	16-57	B	IW100A	1TC62B
	1Q1151	NE-32-41B	32-41			
	1Q1152	NE-16-25B	16-25			
	1Q1153	NE-48-25B	48-25			
	1Q1154	NE-32-09B	32-09			
	1Q1155	NE-32-57D	32-57			
	1Q1156	NE-16-41D	16-41			
	1Q1157	NE-48-41D	48-41			
	1Q1158	NE-32-25D	32-25			
	1Q1159	NE-16-09D	16-09			
	1Q1160	NE-48-09D	48-09			
	1Q1161	NE-08-49A	08-49			
	1Q1162	NE-40-49A	40-49			
	1Q1163	NE-24-33A	24-33			
	1Q1164	NE-56-33A	56-33			
	1Q1165	NE-08-17A	08-17			
	1Q1166	NE-40-17A	40-17			
	1Q1167	NE-24-49C	24-49			
	1Q1168	NE-08-33C	08-33			
	1Q1169	NE-40-33C	40-33			
	1Q1170	NE-24-17C	24-17			
	1Q1171	NE-56-17C	56-17			

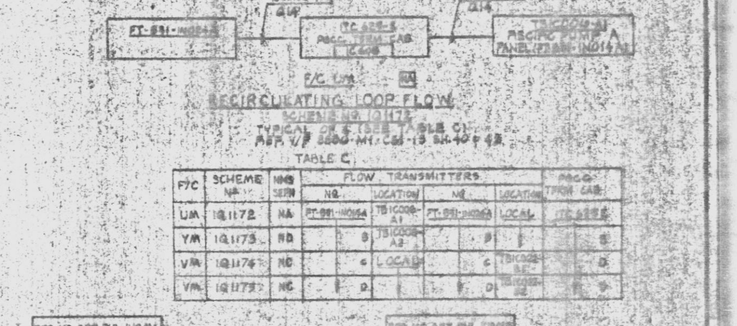

TABLE C

F/C	SCHEME NR.	NMS SEPN	FLOW TRANSMITTERS NO.	LOCATION	NO.	LOCATION	PGCC TERM CAB.
UM	1Q1172	NA	FT-991-IN004A	TB1C00B-A1	FT-991-IN004B	LOCAL	1TC62B
YM	1Q1173	NB		B		B	
VM	1Q1174	NC		C		C	
WM	1Q1175	ND		D		D	

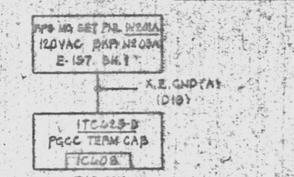

F/C NK

POWER RANGE NEUTRON MON SYS POWER SUPPLY "A"

SCHEME NR. 1Q1176
REF. V/P 8856-M1-C51-19 SH. 4
(SEE NOTE 4)

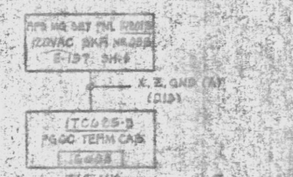

F/C NK

POWER RANGE NEUTRON MON SYS POWER SUPPLY "B"

SCHEME NR. 1Q1177
REF. V/P 8856-M1-C51-19 SH. 4
(SEE NOTE 4)

NOTES:
1. FOR STANDARD SYMBOLS FOR ELECTRICAL DRAWINGS SEE 8856-E-42
2. NNN IN PARENTHESIS ARE GE EQUIPMENT NO.
3. #10 AWG WIRE USED FOR POWER AND CONTROL WHERE SERIES 49 AMPHENOL CONNECTORS ARE USED.
4. FOR MAXIMUM RELIABILITY OF THE SYS POWER SUPPLIES ROUTING OF SYS POWER, SYSTEM A CABLES MUST BE IN A RACEWAYS OTHER THAN THOSE USED FOR SYSTEM B CABLES.
5. ALL INSTRUMENTS ON THIS DWG ARE MFD BY GE UNLESS OTHERWISE NOTED.
6. DESIGN BASED ON G.E. AFED ELEMENTARIES 781E432AE (8856-M1-C51-18) AND 781E416AE (8856-M1-C51-18).
7. FOR POWER RANGE NEUTRON MON SYS 120VAC INST POWER TO JUMPER FROM 1C69F REACTOR PROTECTION SYSTEM (REF. V/P 8856-M1-C51-19 SH 5)

POOR ORIGINAL
Docket # 50-387
Control # 8305290117-176
Date 5/10/83 of Document:
REGULATORY DOCKET FILE
UNCONTROLLED DOCUMENT FOR REFERENCE ONLY
PROPERTY OF APERTURE CARD

REVISIONS				
NO.	DESCRIPTION	DATE	APPROVED	
1	REVISED P/C FEATURE ELEMENTARY PER ECN'S 4 ETTS REVISION.	5/1/81		
2	KEY TO INCORP ECN 01 (DCP 3359 SH 1)	5/1/82		
3	ISSUED FOR CONSTRUCTION	5/1/82		
4	ISSUED FOR INFORMATION	5/1/82		

PENNSYLVANIA POWER & LIGHT COMPANY
ALLENTOWN, PENNSYLVANIA
SUSQUEHANNA STEAM ELECTRIC STATION - UNIT 1 UNIT 2
BECHTEL - SAN FRANCISCO

BLOCK DIAGRAM
NEUTRON MONITORING SYSTEM
UNIT 1

8856 E 77 2 1

D-107326 SH2

24X
I certify that the microfilmed image contained on this microform was made in the normal and regular course of business. This is a true, full, correct and complete reproduction and replacement for and/or in lieu of original documents in the Bechtel group of companies.
NINOUS Date 1-12-82 Camera Type MRG 1
Camera Operator

D

This drawing and the design it covers are the property of BECHTEL: They are merely loaned and on the borrower's express agreement that they will not be reproduced, copied, loaned, exhibited, nor used except in the limited way and private use permitted by any written consent given by the lender to the borrower.

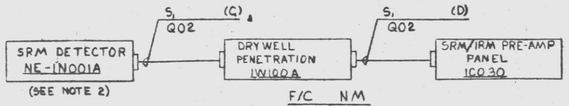

F/C NM

SOURCE RANGE MONITORS

SCHEME Nº 1Q1191
REF. SH.4
TYPICAL OF 4 (SEE TABLE A)

TABLE A

SCHEME Nº	DETECTOR	DRYWELL PENETRATION	PRE-AMP PANEL	PGCC TERM CAB	RELAY CABINET
1Q1191	NE IN001A	1W100A	1C030	ITC614-E	1C606
1Q1192	NE IN001B	1W100C	1C031	ITC624-E	1C633
1Q1193	NE IN001C	1W100D	1C032	ITC614-D	1C606
1Q1194	NE IN001D	1W100B	1C033	ITC624-B	1C633

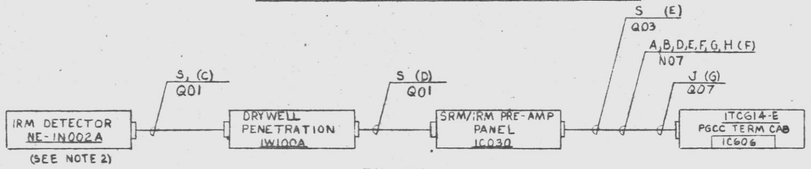

F/C UM

INTERMEDIATE RANGE MONITORS

NA

SCHEME Nº 1Q1195
REF. SH.6 & 7
TYPICAL OF 8 (SEE TABLE B)

TABLE B

F/C	SCHEME NO.	NMS SEPN.	DETECTOR	DRYWELL PENETRATION	PRE-AMP PANEL	PGCC TERM CAB	RELAY CABINET
UM	1Q1195	NA	NE IN002A	1W100A	1C030	ITC614-E	1C606
XM	1Q1196	NB	NE IN002B	1W100C	1C031	ITC624-E	1C633
VM	1Q1197	NC	NE IN002C	1W100D	1C032	ITC614-D	1C606
YM	1Q1198	ND	NE IN002D	1W100B	1C033	ITC624-B	1C633
UM	1Q1199	NA	NE IN002E	1W100A	1C030	ITC614-E	1C606
XM	1Q1200	NB	NE IN002F	1W100C	1C031	ITC624-E	1C633
VM	1Q1201	NC	NE IN002G	1W100D	1C032	ITC614-D	1C606
YM	1Q1202	ND	NE IN002H	1W100B	1C033	ITC624-B	1C633

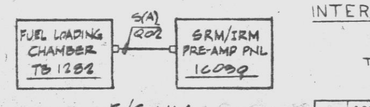

F/C NM

FUEL NEUTRON MONITOR

SCHEME No. 1Q7057
TYPICAL OF 4 (SEE TABLE D)

TABLE D

SCHEME NO	FUEL LOADING CHAMBER TERMINAL BOX NO	SRM/IRM PRE-AMP PNL	F/C
1Q7057	TB 1282	1C030	NM
1Q7058	TB 1283	1C031	NM
1Q7059	TB 1284	1C032	NM
1Q7060	TB 1285	1C033	NM

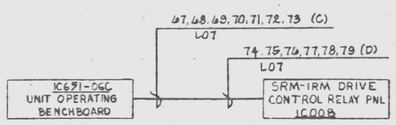

F/C NK

SRM/IRM AUXILIARY RELAYS & REMOTE LIGHTS

SCHEME Nº 1Q1203
REF. SH.5, 8 & 9

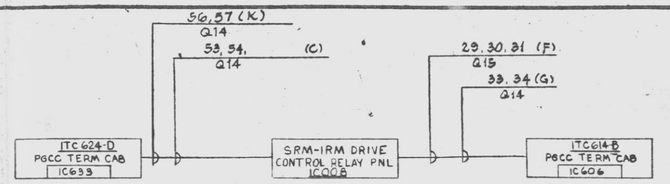

F/C NM
REF: SH.11

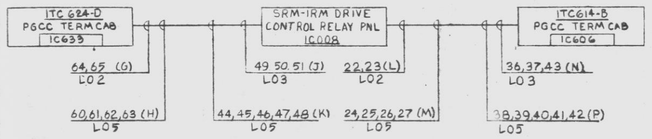

F/C NK

SRM/IRM TRIP AUX

SCHEME Nº 1Q1204
REF. SH.12

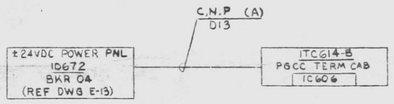

F/C EK [I] (SEE NOTE 4)

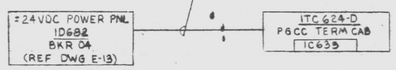

F/C FK [II] (SEE NOTE 4)

±24V DC POWER DISTRIBUTION

SCHEME Nº 1Q1207
REF. SH.1

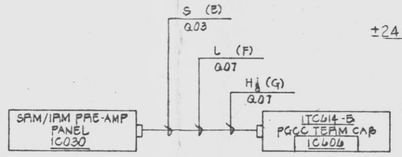

F/C-UM

SOURCE RANGE MONITORS

SCHEME Nº 1Q1191 (TYPICAL OF 4, SEE TABLE C)
REF SH.14

TABLE C

F/C	SCHEME NO.	NMS SEPN	PRE-AMP PANEL	PGCC TERM CAB	RELAY CABINET
UM	1Q1191	NA	1C030	ITC614-E	1C606
XM	1Q1192	NB	1C031	ITC624-E	1C633
VM	1Q1193	NC	1C032	ITC614-D	1C606
YM	1Q1194	ND	1C033	ITC624-B	1C633

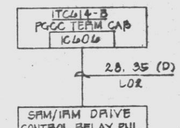

F/C-NK

SRM ANN

SCHEME Nº 1Q1204
REF SH.10

NOTES
1. FOR STANDARD SYMBOLS FOR ELECTRICAL DRAWINGS SEE 8856-E-42.
2. ALL INSTRUMENTS ON THIS DWG ARE MPL Nº C91.
3. DESIGN BASED ON G.E. APED ELEMENTARY DWG. NOS. 791E410AE (8856-M1-C51-20 SH. 4, 5, 6, 7, 8, 9, 10, 11, 11 & 12.)
4. FOR INSTRUMENT GROUNDING REQUIREMENTS OF NEUTRON MONITORING SYSTEM SEE DWG. E-310

Docket # 50-387
Control # 8303220177-177
Date 3/18/83 of Document:
REGULATORY DOCKET FILE

NO.	DATE	REVISIONS	BY	CH'K	SUPV. ENGR.	PROJ. ENGR.	APP'D
A	7/16/79	REVISED PER GE ELEM. DIAG. AND WIRE LIST	ITPS	CH			
A	7/1/82	ISSUED "AS-BUILT"	UN				
A	3/4/81	ADDED IRM WIRING (TOLD 4.0 REV. 0 / SCALE: 10.072)	PC				
A	1/15/79	ISSUED FOR CONSTRUCTION	RC				
A	7/16/78	ISSUED FOR INFORMATION	R.R.				

SCALE NONE | DESIGNED A. VAUSE | DRAWN R. FONG | CHIEF ENGR.

PENNSYLVANIA POWER & LIGHT COMPANY
ALLENTOWN, PENNSYLVANIA
SUSQUEHANNA STEAM ELECTRIC STATION – UNIT 1, UNIT 2
BECHTEL – SAN FRANCISCO

BLOCK DIAGRAM NEUTRON MONITORING SYSTEM UNIT 1

JOB No.	DRAWING No.	REV.
8856	E-177 SH3	5

D-107326 SH3

REFERENCE DWG'S.	
BECHTEL NO.	PL NO.
E-42	A-107171
E-13	E-107162
8856-M1-C51	FF122010

THIS DOCUMENT IS UNDER PP&L ADMINISTRATIVE CONTROL. NO CHANGES CAN BE MADE WITHOUT PRIOR PP&L APPROVAL.

EDWARD K. KANG — REGISTERED PROFESSIONAL ENGINEER — COMMONWEALTH OF PENNSYLVANIA

UNCONTROLLED DOCUMENT FOR REFERENCE ONLY

GITAO BLK DIAG NEUTRON MONITORING SYS I

PRC APERTURE CARD

24X

I certify that the microfilmed image contained on this microform were made in the normal and regular course of business. This is a true, full, correct and complete reproduction and replacement for and/or in lieu of original documents generated by the Bechtel group of companies.
Signed DANNY Date 4-15-82 Camera Type MRG I
Camera Operator

D

This drawing and the design it covers are the property of BECHTEL: They are merely loaned and on the borrower's express agreement that they will not be reproduced, copied, loaned, exhibited, nor used except in the limited way and private use permitted by any written consent given by the lender to the borrower.

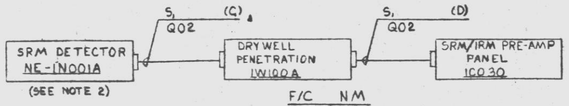

F/C NM

SOURCE RANGE MONITORS

SCHEME Nº 1Q1191
REF. SH.4
TYPICAL OF 4 (SEE TABLE A)

TABLE A

SCHEME Nº	DETECTOR	DRYWELL PENETRATION	PRE-AMP PANEL	PGCC TERM CAB	RELAY CABINET
1Q1191	NE IN001A	1W100A	1C030	ITC614-E	1C606
1Q1192	NE IN001B	1W100C	1C031	ITC624-E	1C633
1Q1193	NE IN001C	1W100D	1C032	ITC614-D	1C606
1Q1194	NE IN001D	1W100B	1C033	ITC624-B	1C633

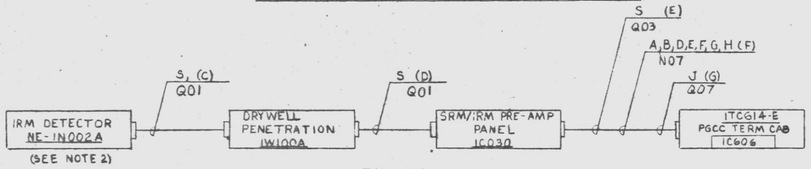

F/C UM

INTERMEDIATE RANGE MONITORS

NA

SCHEME Nº 1Q1195
REF. SH.6 & 7
TYPICAL OF 8 (SEE TABLE B)

TABLE B

F/C	SCHEME NO.	NMS SEPN.	DETECTOR	DRYWELL PENETRATION	PRE-AMP PANEL	PGCC TERM CAB	RELAY CABINET
UM	1Q1195	NA	NE IN002A	1W100A	1C030	ITC614-E	1C606
XM	1Q1196	NB	NE IN002B	1W100C	1C031	ITC624-E	1C633
VM	1Q1197	NC	NE IN002C	1W100D	1C032	ITC614-D	1C606
YM	1Q1198	ND	NE IN002D	1W100B	1C033	ITC624-B	1C633
UM	1Q1199	NA	NE IN002E	1W100A	1C030	ITC614-E	1C606
XM	1Q1200	NB	NE IN002F	1W100C	1C031	ITC624-E	1C633
VM	1Q1201	NC	NE IN002G	1W100D	1C032	ITC614-D	1C606
YM	1Q1202	ND	NE IN002H	1W100B	1C033	ITC624-B	1C633

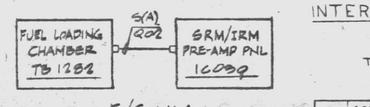

F/C NM

FUEL NEUTRON MONITOR

SCHEME No. 1Q7057
TYPICAL OF 4 (SEE TABLE D)

TABLE D

SCHEME NO	FUEL LOADING CHAMBER TERMINAL BOX NO	SRM/IRM PRE-AMP PNL	F/C
1Q7057	TB 1282	1C030	NM
1Q7058	TB 1283	1C031	NM
1Q7059	TB 1284	1C032	NM
1Q7060	TB 1285	1C033	NM

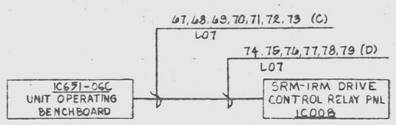

F/C NK

SRM/IRM AUXILIARY RELAYS & REMOTE LIGHTS

SCHEME Nº 1Q1203
REF. SH.5, 8 & 9

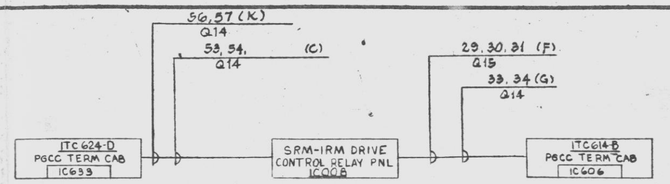

F/C NM
REF: SH.11

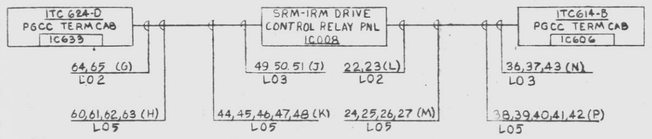

F/C NK

SRM/IRM TRIP AUX

SCHEME Nº 1Q1204
REF. SH.12

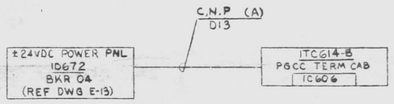

F/C EK [I] (SEE NOTE 4)

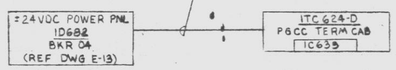

F/C FK [II] (SEE NOTE 4)

±24V DC POWER DISTRIBUTION

SCHEME Nº 1Q1207
REF. SH.1

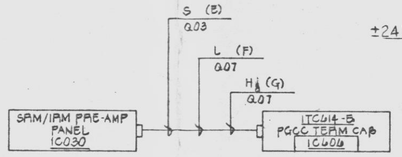

F/C-UM

SOURCE RANGE MONITORS

SCHEME Nº 1Q1191 (TYPICAL OF 4, SEE TABLE C)
REF SH.14

TABLE C

F/C	SCHEME NO.	NMS SEPN	PRE-AMP PANEL	PGCC TERM CAB	RELAY CABINET
UM	1Q1191	NA	1C030	ITC614-E	1C606
XM	1Q1192	NB	1C031	ITC624-E	1C633
VM	1Q1193	NC	1C032	ITC614-D	1C606
YM	1Q1194	ND	1C033	ITC624-B	1C633

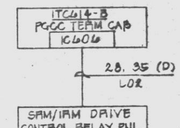

F/C-NK

SRM ANN

SCHEME Nº 1Q1204
REF SH.10

NOTES
1. FOR STANDARD SYMBOLS FOR ELECTRICAL DRAWINGS SEE 8856-E-42.
2. ALL INSTRUMENTS ON THIS DWG ARE MPL Nº C91.
3. DESIGN BASED ON G.E. APED ELEMENTARY DWG. NOS. 791E410AE (8856-M1-C51-20 SH. 4, 5, 6, 7, 8, 9, 10, 11, 11 & 12.)
4. FOR INSTRUMENT GROUNDING REQUIREMENTS OF NEUTRON MONITORING SYSTEM SEE DWG. E-310

Docket # 50-387
Control # 8303220177-177
Date 3/18/83 of Document:
REGULATORY DOCKET FILE

NO.	DATE	REVISIONS	BY	CH'K	SUPV. ENGR.	PROJ. ENGR.	APP'D
A	7/16/79	REVISED PER GE ELEM. DIAG. AND WIRE LIST	ITPS	CH			
A	7/1/82	ISSUED "AS-BUILT"	UN				
A	3/4/81	ADDED IRM WIRING (TOLD 4.0 REV. 0 / SCALE: 10.072)	PC				
A	1/15/79	ISSUED FOR CONSTRUCTION	RC				
A	7/16/78	ISSUED FOR INFORMATION	R.R.				

SCALE NONE | DESIGNED A. VAUSE | DRAWN R. FONG | CHIEF ENGR.

PENNSYLVANIA POWER & LIGHT COMPANY
ALLENTOWN, PENNSYLVANIA
SUSQUEHANNA STEAM ELECTRIC STATION – UNIT 1, UNIT 2
BECHTEL – SAN FRANCISCO

BLOCK DIAGRAM NEUTRON MONITORING SYSTEM UNIT 1

JOB No.	DRAWING No.	REV.
8856	E-177 SH3	5

D-107326 SH3

REFERENCE DWG'S.	
BECHTEL NO.	PL NO.
E-42	A-107171
E-13	E-107162
8856-M1-C51	FF122010

THIS DOCUMENT IS UNDER PP&L ADMINISTRATIVE CONTROL. NO CHANGES CAN BE MADE WITHOUT PRIOR PP&L APPROVAL.

EDWARD K. KANG — REGISTERED PROFESSIONAL ENGINEER — COMMONWEALTH OF PENNSYLVANIA

UNCONTROLLED DOCUMENT FOR REFERENCE ONLY

GITAO BLK DIAG NEUTRON MONITORING SYS I

PRC APERTURE CARD

24X

I certify that the microfilmed image contained on this microform were made in the normal and regular course of business. This is a true, full, correct and complete reproduction and replacement for and/or in lieu of original documents generated by the Bechtel group of companies.
Signed DANNY Date 4-15-82 Camera Type MRG I
Camera Operator

D

This drawing and the design it covers are the property of BECHTEL. They are issued only upon the borrower's express agreement that they will not be reproduced, copied, loaned, exhibited, nor used except in the limited way and privilege granted by the borrower. They are not to be used in any way detrimental to the interest of BECHTEL, nor shall any privilege be granted by any foreign concern given by the borrower to the borrower.

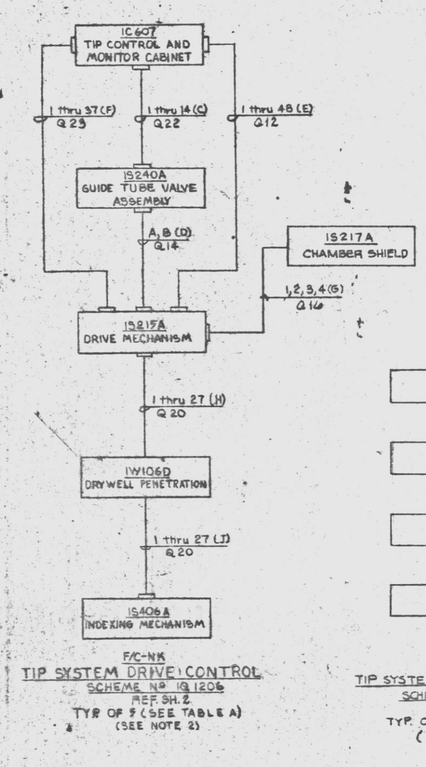

F/C-NK
TIP SYSTEM DRIVE CONTROL
SCHEME Nº 1Q1206
REF SH. 2
TYP OF 5 (SEE TABLE A)
(SEE NOTE 2)

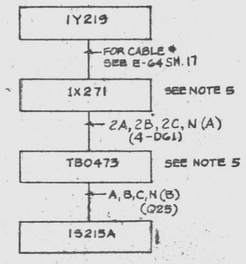

F/C-NP
TIP SYSTEM DRIVE POWER
SCHEME NO. 1Q1206
REF. SH. 2
TYP. OF 5 (SEE TABLE A)
(SEE NOTE 2)

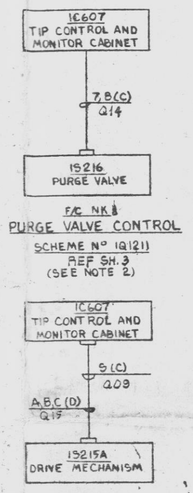

F/C NK
PURGE VALVE CONTROL
SCHEME Nº 1Q1211
REF SH. 3
(SEE NOTE 2)

F/C-NM
TIP SYSTEM X-Y RECORDER
SCHEME Nº 1Q1212
REF SH. 3
TYP OF 5 (SEE TABLE B)

TABLE A

SCHEME Nº	CONTROL PANEL	GUIDE TUBE VALVE ASSY	DRIVE MECHANISM	208VAC POWER SUPPLY	CHAMBER SHIELD	DRYWELL PENETRATION	INDEXING MECHANISM	TERMINAL BOX
1Q1206	1C607	1S240A	1S215A	1Y219	1S217A	1W106D	1S406A	TB0473
1Q1207	1C607	1S240B	1S215B	↓	1S217B	1W106D	1S406B	↓
1Q1208	1C607	1S240C	1S215C		1S217C	1W106D	1S406C	
1Q1209	1C607	1S240D	1S215D		1S217D	1W106C	1S406D	
1Q1210	1C607	1S240E	1S215E		1S217E	1W106C	1S406E	

TABLE B

SCHEME Nº	CONTROL PANEL	DRIVE MECHANISM
1Q1212	1C607	1S215A
1Q1213	1C607	1S215B
1Q1214	1C607	1S215C
1Q1215	1C607	1S215D
1Q1216	1C607	1S215E

TIP SYSTEM INSTRUMENT AC SUPPLY

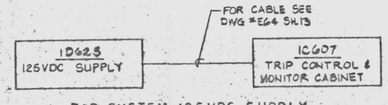

TIP SYSTEM 125VDC SUPPLY

NOTES:
1. FOR STANDARD SYMBOLS FOR ELECTRICAL DRAWINGS SEE 8856-E-48.
2. #16 AND/OR #20 WIRE IS USED FOR POWER AND CONTROL WHERE SERIES 62 AMPHENOL CONNECTORS ARE USED.
3. DESIGN BASED ON G.E. APED ELEMENTARY 781E413AE (8856-M1-C51-17) SH. 1, 2 & 3.
4. FOR INSTRUMENT POWER SUPPLIES, SEE E-64
5. TB0473 AND 1X271 SHOULD BE LOCATED AS CLOSE TO 1S215A AS POSSIBLE.

PRC APERTURE CARD

THIS DOCUMENT IS UNDER PP&L ADMINISTRATIVE CONTROL. NO CHANGES CAN BE MADE WITHOUT PRIOR PP&L APPROVAL.

REFERENCE DWG'S.

BECHTEL NO.	PP&L NO.
E-48	A-107191
E-11	E-107160
E-17 SH 4	E-107164 SH 4
8856-M1-C51	FRIDA-010
E-64	A-127213

Docket # 50-387
Control # 8303220117-178
Date 3/10/83 of Document:
REGULATORY DOCKET FILE

UNCONTROLLED DOCUMENT FOR REFERENCE ONLY

EDWARD K. KANG
REGISTERED PROFESSIONAL ENGINEER

NO.	DATE	REVISIONS	BY	CHK	SUPV	ENG	PROJ ENGR	APP'D
7	4/11/83	RELOCATED CABLE BLOCK DIAGRAM (DCR #8)	G.H.	JB				
6	3/1/83	ISSUED "AS-BUILT"	UN	UN				
5	2/18/83	REVISED TO INCORPORATE FCR E-10623 & E-9316	T.Y.					
4	1/10/83	REV. TO INCORP IDCN 1A (DCP 8052); FCR E-3841	T.Y.					
3	11/5/82	ISSUED FOR CONSTRUCTION						
2	9/24/82	ISSUED FOR INFORMATION	R.P.					

SCALE: NONE | DESIGNED: A. VAUSE | DRAWN: R. FONG | CHIEF ENGR.

PENNSYLVANIA POWER & LIGHT COMPANY
ALLENTOWN, PENNSYLVANIA
SUSQUEHANNA STEAM ELECTRIC STATION - UNIT 1, UNIT 2
BECHTEL - SAN FRANCISCO

BLOCK DIAGRAM NEUTRON MONITORING SYSTEM (TIP SYSTEM) UNIT 1

JOB No.	DRAWING No.	REV.
8856	E-177 SH 4	7

D-107326 SH 4

24X

I certify that the microfilmed image contained on this microform were made in the normal and regular course of business. This is a true, full, correct and complete reproduction and replacement for and/or in lieu of original documents generated by the Bechtel group of companies.
Signed DANNY Date 4-15-83 Camera Type MRG 1
Camera Operator

D

This drawing and the design it covers are the property of BECHTEL. They are merely loaned and on the borrower's express agreement that they will not be reproduced, copied, loaned, exhibited, nor used except in the limited way and private use permitted by any written consent given by the lender to the borrower.

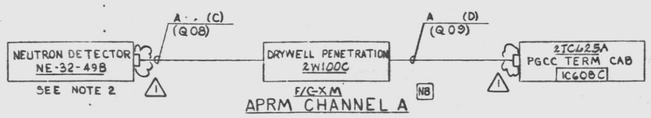

APRM CHANNEL A

SCHEME Nº 2Q1000

TYPICAL OF 129

REF V/P 8856-M1 C51-19 SH.11

	SCHEME Nº	NEUTRON DETECTOR	CORE COORDINATES	APRM CHAN	DRYWELL PEN.	PGCC TERM.CAB
NMS SEPARATION NB F/C XM	2Q1000	NE-32-49B	32-49	A	2W100C	2TC425A
	2Q1001	NE-16-33B	16-33			
	2Q1002	NE-48-33B	48-33			
	2Q1003	NE-32-17B	32-17			
	2Q1004	NE-16-49D	16-49			
	2Q1005	NE-48-49D	48-49			
	2Q1006	NE-32-33D	32-33			
	2Q1007	NE-16-17D	16-17			
	2Q1008	NE-48-17D	48-17			
	2Q1009	NE-24-57A	24-57			
	2Q1010	NE-08-41A	08-41			
	2Q1011	NE-40-41A	40-41			
	2Q1012	NE-24-25A	24-25			
	2Q1013	NE-56-25A	56-25			
	2Q1014	NE-40-09A	40-09			
	2Q1015	NE-40-57C	40-57			
	2Q1016	NE-24-41C	24-41			
	2Q1017	NE-56-41C	56-41			
	2Q1018	NE-08-25C	08-25			
	2Q1019	NE-40-25C	40-25			
	2Q1020	NE-24-09C	24-09			
NMS SEPARATION NB F/C XM	2Q1021	NE-08-49B	08-49	B	2W100C	2TC425A
	2Q1022	NE-40-49B	40-49			
	2Q1023	NE-24-33B	24-33			
	2Q1024	NE-56-33B	56-33			
	2Q1025	NE-08-17B	08-17			
	2Q1026	NE-40-17B	40-17			
	2Q1027	NE-24-49D	24-49			
	2Q1028	NE-08-33D	08-33			
	2Q1029	NE-40-33D	40-33			
	2Q1030	NE-24-17D	24-17			
	2Q1031	NE-56-17D	56-17			
	2Q1032	NE-32-57A	32-57			
	2Q1033	NE-16-41A	16-41			
	2Q1034	NE-48-41A	48-41			
	2Q1035	NE-32-25A	32-25			
	2Q1036	NE-16-09A	16-09			
	2Q1037	NE-48-09A	48-09			
	2Q1038	NE-16-57C	16-57			
	2Q1039	NE-32-41C	32-41			
	2Q1040	NE-16-25C	16-25			
	2Q1041	NE-48-25C	48-25			
	2Q1042	NE-32-09C	32-09			

	SCHEME Nº	NEUTRON DETECTOR	CORE COORDINATES	APRM CHAN	DRYWELL PEN.	PGCC TERM.CAB
NMS SEPARATION NC F/C VM	2Q1043	NE-24-57B	24-57	C	2W100D	2TC425D
	2Q1044	NE-08-41B	08-41			
	2Q1045	NE-40-41B	40-41			
	2Q1046	NE-24-25B	24-25			
	2Q1047	NE-56-25B	56-25			
	2Q1048	NE-40-09B	40-09			
	2Q1049	NE-40-57D	40-57			
	2Q1050	NE-24-41D	24-41			
	2Q1051	NE-56-41D	56-41			
	2Q1052	NE-08-25D	08-25			
	2Q1053	NE-40-25D	40-25			
	2Q1054	NE-24-09D	24-09			
	2Q1055	NE-16-49A	16-49			
	2Q1056	NE-48-49A	48-49			
	2Q1057	NE-32-33A	32-33			
	2Q1058	NE-16-17A	16-17			
	2Q1059	NE-48-17A	48-17			
	2Q1060	NE-32-49C	32-49			
	2Q1061	NE-16-33C	16-33			
	2Q1062	NE-48-33C	48-33			
	2Q1063	NE-32-17C	32-17			
NMS SEPARATION NC F/C VM	2Q1064	NE-32-57B	32-57	D	2W100D	2TC425D
	2Q1065	NE-16-41B	16-41			
	2Q1066	NE-48-41B	48-41			
	2Q1067	NE-32-25B	32-25			
	2Q1068	NE-16-09B	16-09			
	2Q1069	NE-48-09B	48-09			
	2Q1070	NE-16-57D	16-57			
	2Q1071	NE-32-41D	32-41			
	2Q1072	NE-16-25D	16-25			
	2Q1073	NE-48-25D	48-25			
	2Q1074	NE-32-09D	32-09			
	2Q1075	NE-24-49A	24-49			
	2Q1076	NE-08-33A	08-33			
	2Q1077	NE-40-33A	40-33			
	2Q1078	NE-24-17A	24-17			
	2Q1079	NE-56-17A	56-17			
	2Q1080	NE-08-49C	08-49			
	2Q1081	NE-40-49C	40-49			
	2Q1082	NE-24-33C	24-33			
	2Q1083	NE-56-33C	56-33			
	2Q1084	NE-08-17C	08-17			
	2Q1085	NE-40-17C	40-17			

	SCHEME Nº	NEUTRON DETECTOR	CORE COORDINATES	APRM CHAN	DRYWELL PEN.	PGCC TERM.CAB
NMS SEPARATION NA F/C UM	2Q1086	NE-16-49B	16-49	E	2W100A	2TC425E
	2Q1087	NE-48-49B	48-49			
	2Q1088	NE-32-33B	32-33			
	2Q1089	NE-16-17B	16-17			
	2Q1090	NE-48-17B	48-17			
	2Q1091	NE-32-49D	32-49			
	2Q1092	NE-16-33D	16-33			
	2Q1093	NE-48-33D	48-33			
	2Q1094	NE-32-17D	32-17			
	2Q1095	NE-40-57A	40-57			
	2Q1096	NE-24-41A	24-41			
	2Q1097	NE-56-41A	56-41			
	2Q1098	NE-08-25A	08-25			
	2Q1099	NE-40-25A	40-25			
	2Q1100	NE-24-09A	24-09			
	2Q1101	NE-24-57C	24-57			
	2Q1102	NE-08-41C	08-41			
	2Q1103	NE-40-41C	40-41			
	2Q1104	NE-24-25C	24-25			
	2Q1105	NE-56-25C	56-25			
	2Q1106	NE-40-09C	40-09			
NMS SEPARATION ND F/C YM	2Q1107	NE-24-49B	24-49	F	2W100B	2TC425B
	2Q1108	NE-08-33B	08-33			
	2Q1109	NE-40-33B	40-33			
	2Q1110	NE-24-17B	24-17			
	2Q1111	NE-56-17B	56-17			
	2Q1112	NE-08-49D	08-49			
	2Q1113	NE-40-49D	40-49			
	2Q1114	NE-24-33D	24-33			
	2Q1115	NE-56-33D	56-33			
	2Q1116	NE-08-17D	08-17			
	2Q1117	NE-40-17D	40-17			
	2Q1118	NE-16-57A	16-57			
	2Q1119	NE-32-41A	32-41			
	2Q1120	NE-16-25A	16-25			
	2Q1121	NE-48-25A	48-25			
	2Q1122	NE-32-09A	32-09			
	2Q1123	NE-32-57C	32-57			
	2Q1124	NE-16-41C	16-41			
	2Q1125	NE-48-41C	48-41			
	2Q1126	NE-32-25C	32-25			
	2Q1127	NE-16-09C	16-09			
	2Q1128	NE-48-09C	48-09			

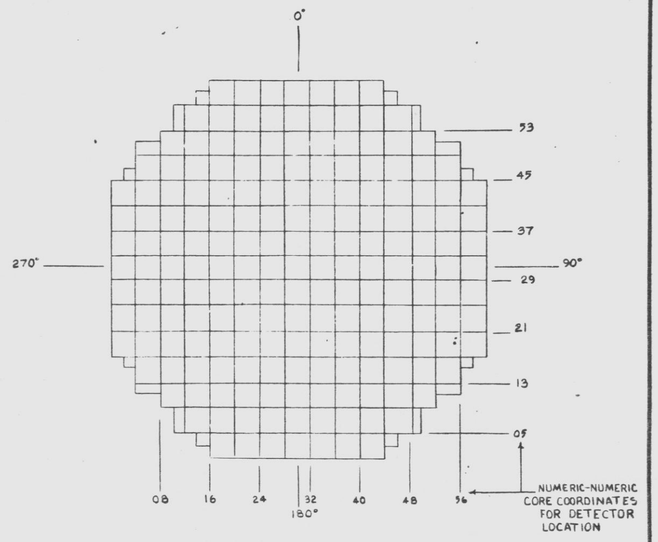

REACTOR CORE-TOP VIEW

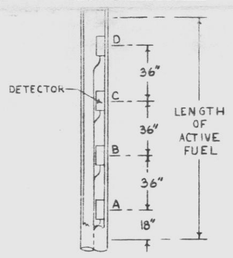

MONITOR ASSEMBLY

NOTES:

1. FOR STANDARD SYMBOLS FOR ELECTRICAL DIAGRAMS SEE 8856-E-42.
2. ALL INSTRUMENTS ON THIS DWG ARE MPL Nº. C51.
3. DESIGN BASED ON G.E. APED ELEMENTARY 791E411AE (V/P 8856-M1-C51-19) SH. 11, 13, 15 17, 19 & SH. 21.

REFERENCE DWG'S.	
BECHTEL NO.	PL NO.
E-42	A-107191
8856-M1-C51	FF122010

PRC APERTURE CARD
UNCONTROLLED DOCUMENT FOR REFERENCE ONLY

Docket # 50-387
Control # 8303220117-179
Date 3/10/83 of Document
REGULATORY DOCKET FILE

D

No.	DATE	REVISIONS	BY	CHK	DESIGN SUPV.	ENGR	PROJ ENGR	APP'S
3	12/1/82	REVISED DWG. TITLE & BLOCK DIAG. (DCN 42)	RBL	[illegible]				
2	6/8/82	ISSUED FOR CONSTRUCTION	K.H.	K.H.				
1								

SCALE ¼" | DESIGNED C.S. HOU | DRAWN M.P. SANTOS | CHIEF ENGR

PENNSYLVANIA POWER & LIGHT COMPANY
ALLENTOWN, PENNSYLVANIA
SUSQUEHANNA STEAM ELECTRIC STATION - UNIT 1, UNIT 2

BECHTEL - SAN FRANCISCO

BLOCK DIAGRAM
NEUTRON MONITORING SYSTEM
(APRM) UNIT-2

JOB No.	DRAWING No.	REV.
8856	E-177 SH 5	1

D-107326 SH5

G2T40 BLK DIAG NEUTRON MON SYS 1 W

22 x 34 "D" SIZE

24X

I certify that the microfilmed image contained on this microform were made in the normal and regular course of business. This is a true, full, correct and complete reproduction and replacement for and/or in lieu of original documents generated by the Bechtel group of companies.
Signed [illegible] Camera Operator Date 1-6-82 Camera Type MRC 1

This drawing and the design it covers are the property of BECHTEL. They are merely loaned and on the borrower's express agreement that they will not be reproduced, copied, loaned, exhibited, sold or used except in the limited way and private use permitted by any written consent given by the lender to the borrower.

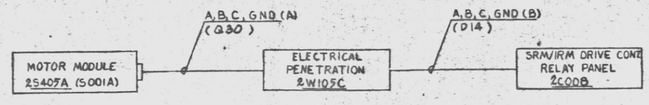

F/C NP
TYPICAL OF 12 (SEE TABLE A)
SEE NOTE 3

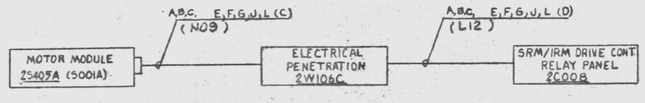

F/C NK
TYPICAL OF 12 (SEE TABLE A)
SEE NOTE 3

START-UP RANGE DETECTOR DRIVE 25405A

SCHEME Nº 2Q1178

TYPICAL OF 12 (SEE TABLE A)
REF. V/P 8856-M1-C51-18 (2)

TABLE A

SCHEME NUMBER	DESCRIPTION	MOTOR MODULE	LAYOUT DRAWING NUMBER	ELECTRICAL PENETRATION POWER	ELECTRICAL PENETRATION CONTROL	SRM/IRM CHANNEL	RELAY PANEL
2Q1178	START-UP RANGE DETECTOR DRIVE 25405A	25405A	E-31 SH.3&6	2W105C	2W104C	SRM A	2C00B
2Q1179	25405B	25405B		D	D	B	
2Q1180	25405C	25405C		D	D	C	
2Q1181	25405D	25405D		C	C	D	
2Q1182	25405E	25405E		C	C	IRM A	
2Q1183	25405F	25405F		D	D	B	
2Q1184	25405G	25405G		C	C	C	
2Q1185	25405H	25405H		D	D	D	
2Q1186	25405J	25405J		D	D	E	
2Q1187	25405K	25405K		C	C	F	
2Q1188	25405L	25405L		D	D	G	
2Q1189	25405M	25405M		C	C	H	

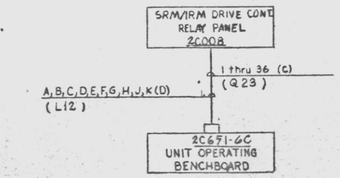

F/C NK

START-UP RANGE DETECTOR DRIVE POWER AND INDICATORS

SCHEME Nº 2Q1190
REF. V/P 8856-M1-C51-18 (2)

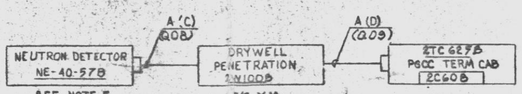

SEE NOTE 3
F/C YM

LPRM GROUP A

SCHEME Nº 2Q1129

TYPICAL OF 43 (SEE TABLE B)
REF. V/P 8856-M1-C51-19 SH.27 & 28

TABLE B

	SCHEME Nº	NEUTRON DETECTOR	CORE COORDINATES	LPRM GROUP	DRYWELL PEN.	PGCC TERM CAB
F/C YM, NMS SEPARATION ND	2Q1129	NE-40-57B	40-57	A	2W100B	2TC625B
	2Q1130	NE-24-41B	24-41			
	2Q1131	NE-56-41B	56-41			
	2Q1132	NE-08-25B	08-25			
	2Q1133	NE-40-25B	40-25			
	2Q1134	NE-24-09B	24-09			
	2Q1135	NE-24-57D	24-57			
	2Q1136	NE-08-41D	08-41			
	2Q1137	NE-40-41D	40-41			
	2Q1138	NE-24-25D	24-25			
	2Q1139	NE-56-25D	56-25			
	2Q1140	NE-40-09B	40-09			
	2Q1141	NE-32-49A	32-49			
	2Q1142	NE-16-33A	16-33			
	2Q1143	NE-48-33A	48-33			
	2Q1144	NE-32-17A	32-17			
	2Q1145	NE-16-49C	16-49			
	2Q1146	NE-48-49C	48-49			
	2Q1147	NE-32-33C	32-33			
	2Q1148	NE-16-17C	16-17			
	2Q1149	NE-48-17C	48-17			
F/C UM, NMS SEPARATION NA	2Q1150	NE-16-57B	16-57	B	2W100A	2TC625E
	2Q1151	NE-32-41B	32-41			
	2Q1152	NE-16-25B	16-25			
	2Q1153	NE-48-25B	48-25			
	2Q1154	NE-32-09B	32-09			
	2Q1155	NE-32-57D	32-57			
	2Q1156	NE-16-41D	16-41			
	2Q1157	NE-48-41D	48-41			
	2Q1158	NE-32-25D	32-25			
	2Q1159	NE-16-09D	16-09			
	2Q1160	NE-48-09D	48-09			
	2Q1161	NE-08-49A	08-49			
	2Q1162	NE-40-49A	40-49			
	2Q1163	NE-24-33A	24-33			
	2Q1164	NE-56-33A	56-33			
	2Q1165	NE-08-17A	08-17			
	2Q1166	NE-40-17A	40-17			
	2Q1167	NE-24-49C	24-49			
	2Q1168	NE-08-33C	08-33			
	2Q1169	NE-40-33C	40-33			
	2Q1170	NE-24-17C	24-17			
	2Q1171	NE-56-17C	56-17			

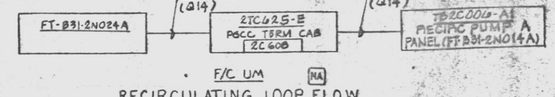

F/C UM NA

RECIRCULATING LOOP FLOW

SCHEME Nº 2Q1172
TYPICAL OF 4 (SEE TABLE C)
REF. V/P 8856-M1-C51-19 SH.40 & 42

TABLE C

F/C	SCHEME Nº	NMS SEPN	FLOW TRANSMITTERS Nº		LOCATION	Nº		LOCATION	PGCC TERM CAB	
UM	2Q1172	NA	FT-B31-2N014A		TB2C004-A1	FT-B31-2N024A		LOCAL	2TC625 E	
YM	2Q1173	ND		B	TB2C004-A2		B			B
VM	2Q1174	NC		C	LOCAL		C	TB2C022-B1		D
VM	2Q1175	NC		D			D	TB2C022-B2		D

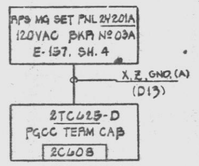

F/C NK

POWER RANGE NEUTRON MON SYS POWER SUPPLY "A"

SCHEME Nº 2Q1176
REF. V/P 8856-M1-C51-19 SH. 3
(SEE NOTE 4)

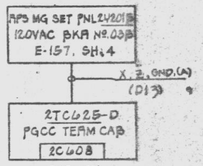

F/C NK

POWER RANGE NEUTRON MON SYS POWER SUPPLY "B"

SCHEME Nº 2Q1177
REF. V/P 8856-M1-C51-19 SH. 4
(SEE NOTE 4)

NOTES
1. FOR STANDARD SYMBOLS FOR ELECTRICAL DRAWINGS SEE 8856-E-42
2. Nºs IN PARENTHESIS ARE G.E. EQUIPMENT Nºs
3. #16 AWG WIRE USED FOR POWER AND CONTROL WHERE SERIES 69 AMPHENOL CONNECTORS ARE ALL SHIELDS INSIDE PENETRATION SHOULD BE FLOATING
4. FOR MAXIMUM RELIABILITY OF THE RPS POWER SUP ROUTING OF RPS SYSTEMS "A" CABLES SHALL UTILIZE A OTHER THAN THOSE USED FOR THE RPS POWER SYSTEMS "B" CA
2. ALL INSTRUMENTS ON THIS DWG ARE MFR. Nº C UNLESS OTHERWISE NOTED.
4. DESIGN BASED ON G.E. APED ELEMENTARIES 791E412AE (8856-M1-C51-18) AND 791E411AE (8856-M1-C51-19).

PRC APERTURE CARD

REFERENCE DWG'S.	
BECHTEL NO.	PL NO.
E-42	A-107191
E-157.	A-107306,
8856-M1-C51	FF122010
E-64	A-107213

Document #50-387
Control #8303220177 80
Date 3/10/83 of Document:
REGULATORY DOCKET FILE

UNCONTROLLED DOCUMENT FOR REFERENCE ONLY

NO.	DATE	REVISIONS	BY	CHK	ISSUING SUPV	ENGR	PROJ ENGR	APP'S
3	1/18/83	REVISED PER DCP 393.5 (REV. 1)	RBL	CJ				
2	12/21/82	REV. TO INCORP DCN #1 (LOCA9), DCN #2 (LOCA10), REV'D BLOCK DWG TITLE & TABLE A (LOCA12).	MRM	CJ				
1	8/17/77	ISSUED FOR CONSTRUCTION	C.H.	C.H.				

SCALE NONE | DESIGNED C.S. HOU | DRAWN M PSANTOS | CHIEF ENGR.

PENNSYLVANIA POWER & LIGHT COMPANY
ALLENTOWN, PENNSYLVANIA
SUSQUEHANNA STEAM ELECTRIC STATION – UNIT 1, UNIT 2
BECHTEL – SAN FRANCISCO

BLOCK DIAGRAM NEUTRON MONITORING SYSTEM (APRM, SRM/IRM DRIVE) UNIT-2

JOB No.	DRAWING No.	REV.
8856	E-177 SH 6	2

D-107326 SH6

G2T40 BLK DIAG NEUTRON MON SYS W

24X

I certify that the microfilmed image contained on this microform were made in the normal and regular course of business. This is a true, full, correct and complete reproduction and replacement for and/or in lieu of original documents generated by the Bechtel group of companies.
Signature DANNY Date 1-20-83 Camera Type MRG 1
Camera Operator

D

This drawing and the design it covers are the property of BECHTEL. They are not to be reproduced, copied, loaned, exhibited, nor used except in the limited way and private use permitted by any printed consent given by the lender to the borrower.

SRM DETECTOR NE-2N001A (SEE NOTE 2) — S, (C) (Q02) — DRYWELL PENETRATION 2W100A — S, (D) (Q02) — SRM/IRM PRE-AMP PANEL 2C030

F/C - NM

SOURCE RANGE MONITORS

SCHEME Nº 2Q1191
REF. SH.4
TYPICAL OF 4 (SEE TABLE A)

TABLE A

SCHEME Nº	DETECTOR	DRYWELL PENETRATION	PRE-AMP PANEL
2Q1191	NE2N001A	2W100A	2C030
2Q1192	NE2N001B	2W100C	2C031
2Q1193	NE2N001C	2W100D	2C032
2Q1194	NE2N001D	2W100B	2C033

(SEE NOTE 5)

IRM DETECTOR NE-2N002A (SEE NOTE 2) — S, (C) (Q01) — DRYWELL PENETRATION 2W100A — S (D) (Q01) — SRM/IRM PRE-AMP PANEL 2C030 — S (E) (Q03), A,B,D,E,F,G,H (F) (N07), J (G) (Q07) — 2TCG14-E PGCC TERM CAB 2C606

F/C-UM

INTERMEDIATE RANGE MONITORS

SCHEME Nº 2Q1199
REF. SH.6 & 7
TYPICAL OF 8 (SEE TABLE B)

NA

TABLE B

F/C	SCHEME NO.	NMS SEPN.	DETECTOR	DRYWELL PENETRATION	PRE-AMP PANEL	PGCC TERM CAB	RELAY CABINET
UM	2Q1195	NA	NE2N002A	2W100A	2C030	2TCG14-E	2C606
XM	2Q1196	NB	NE2N002B	2W100C	2C031	2TC624-E	2C633
VM	2Q1197	NC	NE2N002C	2W100D	2C032	2TCG14-D	2C606
YM	2Q1198	ND	NE2N002D	2W100B	2C033	2TC624-D	2C633
UM	2Q1199	NA	NE2N002E	2W100A	2C030	2TCG14-E	2C606
XM	2Q1200	NB	NE2N002F	2W100C	2C031	2TC624-E	2C633
VM	2Q1201	NC	NE2N002G	2W100D	2C032	2TCG14-D	2C606
YM	2Q1202	ND	NE2N002H	2W100B	2C033	2TC624-D	2C633

FUEL LOADING CHAMBER TB1361 — S(A) (Q02) — SRM/IRM PRE-AMP PNL 2C030

F/C-NM

FUEL NEUTRON MONITOR
SCHEME NO. 2Q7058
TYPICAL OF 4 (SEE TABLE D)

TABLE D

SCHEME NO.	FUEL LOADING CHAMBER TERM. BOX NO.	SRM/IRM PRE-AMP PNL
2Q7058	TB 1361	2C030
2Q7059	TB 1362	2C031
2Q7060	TB 1363	2C032
2Q7061	TB 1364	2C033

(SEE NOTE 5)

67,68,69,70,71,72,73 (C) (L07)
74,75,76,77,78,79 (D) (L07)
2C631-066 UNIT OPERATING BENCHBOARD — SRM-IRM DRIVE CONTROL RELAY PNL 2C008

F/C-NK

SRM/IRM AUXILIARY RELAYS & REMOTE LIGHTS

SCHEME Nº 2Q1203
REF. SH.5, 8 & 9

S (E) (Q03) — L (F) (Q07) — H (G) (Q07) — SRM/IRM PRE-AMP PANEL 2C030 — 2TCG14-E PGCC TERM CAB 2C606

F/C-UM

SOURCE RANGE MONITORS

SCHEME NO. 2Q1191 (TYPICAL OF 4, SEE TABLE C)
REF. SH.14

TABLE C

F/C	SCHEME NO.	NMS SEPN.	PRE-AMP PANEL	PGCC TERM CAB	RELAY CABINET
UM	2Q1191	NA	2C030	2TCG14-E	2C606
XM	2Q1192	NB	2C031	2TC624-E	2C633
VM	2Q1193	NC	2C032	2TCG14-D	2C606
YM	2Q1194	ND	2C033	2TC624-D	2C633

56,57 (K) (Q14), 53,54, (C) (Q14) — 2TC624-D PGCC TERM CAB 2C633 — SRM-IRM DRIVE CONTROL RELAY PNL 2C008 — 29,30,31 (F) (Q15), 33,34 (G) (Q14) — 2TCG14-B PGCC TERM CAB 2C606

F/C-NM
REF: SH.11

2TC624-D PGCC TERM CAB 2C633 — SRM-IRM DRIVE CONTROL RELAY PNL 2C008 — 2TCG14-B PGCC TERM CAB 2C606

64,65 (G) (L02) — 49,50,51 (J) (L03) — 22,23 (L) (L02) — 36,37,43 (N) (L03)
60,61,62,63 (H) (L03) — 44,45,46,47,48 (K) (L03) — 24,25,26,27 (M) (L03) — 38,39,40,41,42 (P) (L03)

F/C-NK

SRM/IRM TRIP AUX

SCHEME Nº 2Q1204
REF. SH.12

2TCG14-B PGCC TERM CAB 2C606 — 28,29 (D) (L02) — SRM/IRM DRIVE CONTROL RELAY PNL 2C008 — 52,53,54 (G) (L03) — 2TC624-D PGCC TERM CAB 2C633

F/C-NK

SRM ANN.

SCHEME Nº 2Q1204
REF SH.10

±24VDC POWER PNL 2D672 BKR 04 (REF DWG E-13) — C,N,P (A) (D13) — 2TCG14-B PGCC TERM CAB 2C606

F/C-EK (I) (SEE NOTE 4)

±24VDC POWER PNL 2D682 BKR 04 (REF DWG E-13) — C,N,P (B) (D13) — 2TC624-D PGCC TERM CAB 2C633

F/C-FK (II) (SEE NOTE 4)

±24V DC POWER DISTRIBUTION

SCHEME NO 2Q1205
REF. SH. 1

NOTES
1. FOR STANDARD SYMBOLS FOR ELECTRICAL DRAWINGS SEE 8856-E-42.
2. ALL INSTRUMENTS ON THIS DWG ARE MPL Nº C51.
3. DESIGN BASED ON G.E. APED ELEMENTARY DWG NO. 791E410AE (8856-M1-C51-2Q SH. 4, 5, 6, 7, 8, 9, 10, 11 & 12.)
4. FOR INSTRUMENT GROUNDING REQUIREMENTS OF NEUTRON MONITORING SYSTEM SEE DWG E-310.
5. DURING FUEL LOADING PERIOD CABLES NM2Q1910 THRU NM2Q1914D WILL BE DISCONNECTED FROM PRE-AMP PNLS, AND CABLES NM2Q7058A THRU NM2Q7061A WILL BE CONNECTED RESPECTIVELY.

REFERENCE DWG'S.	
BECHTEL NO.	PL. NO.
E-42	A-107191
E-13	E-107162
8856-M1-C51	FF122010

NO.	DATE	REVISIONS	BY	CHK'D	ENGR	PROJ ENGR	APP'D
2	12/16/81	ADDED CABLES & NOTE 5 (FOR D) INCORP. PCN # 14 REV. TABLE A TITLE (OCR 423)	SBS	SBS			
1	9/4/81	REVISED PER GE ELEM DIAG. AND WIRE LIST	JTS	C.H.			
0	8/14/81	ISSUED FOR CONSTRUCTION	C.H.				

SCALE — DESIGNED C.S. HOU — DRAWN M. SANTOS — CHIEF ENGR

PENNSYLVANIA POWER & LIGHT COMPANY
ALLENTOWN, PENNSYLVANIA
SUSQUEHANNA STEAM ELECTRIC STATION – UNIT 1, UNIT 2

BECHTEL – SAN FRANCISCO

BLOCK DIAGRAM NEUTRON MONITORING SYSTEM SRM/IRM SYSTEMS UNIT 2

JOB Nº	DRAWING NO.	REV.
8856	E-177 SH 7	2

D-107326 SH7

Docket #50-388
Control #8203290177-181
Date 3/10/83 of Document:
REGULATORY DOCKET FILE

UNCONTROLLED DOCUMENT FOR REFERENCE ONLY.

PRC APERTURE CARD

24X

I certify that the microfilmed image contained on this microform were made in the normal and regular course of business. This is a true, full, correct and complete reproduction and replacement for and/or in lieu of original documents generated by the Bechtel group of companies.
Signed: Camera Operator Date: Camera Type:

D

This drawing and the design it covers are the property of BECHTEL. They are merely loaned and on the borrower's express agreement that they will not be reproduced, copied, loaned, exhibited, nor used except in the limited way and private use permitted by any written consent given by the lender to the borrower.

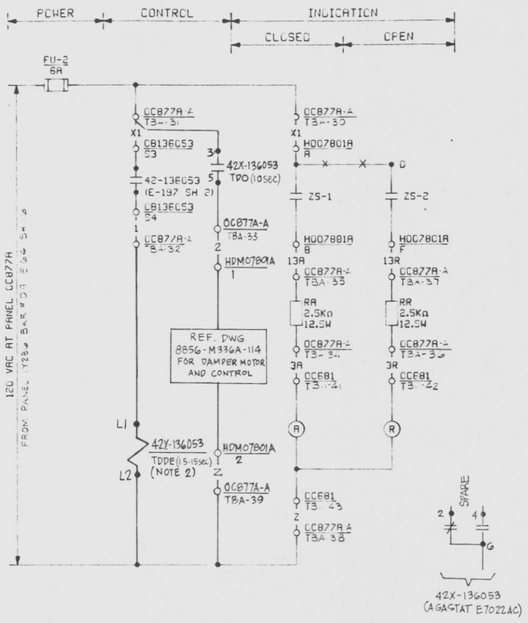

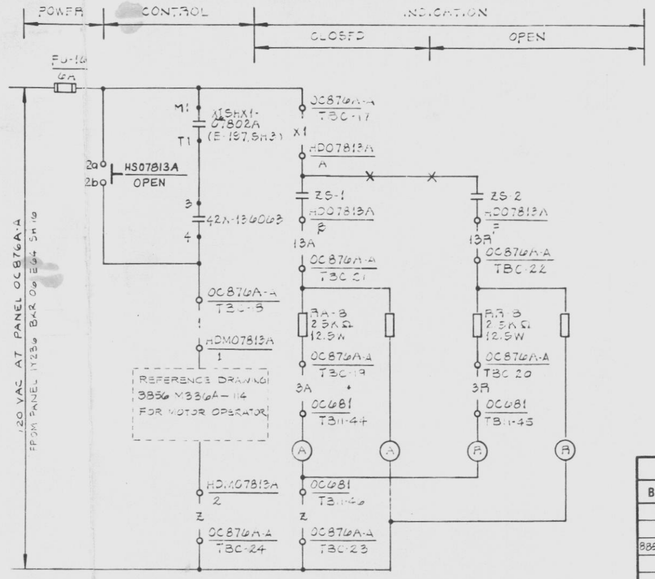

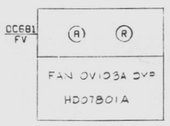

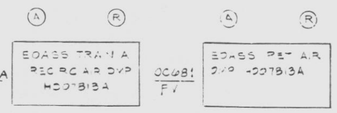

SWITCH DEVELOPMENT

BLOCK No.	CONTACT No.	POSITION	OPEN	CLOSE	DRAWING No.
TOP	1A 1B	F		X	SPARE
	2A 2B	B	X		THIS SH

SELECTOR SWITCH: HS07813A, HS07813B
GE TYPE CR2940
MAINTAINED CONTACTS

REFERENCE DWG'S.	
BECHTEL NO.	PL. NO.
E-42	A-107191
1-178	B-106518
8856-M336A-114	SF-108860

- VALVE LIMIT SWITCH DEVELOPMENT

SWITCH	CONTACT	100% OPEN	INTERMEDIATE	100% CLOSED	CONTACT USED
CLOSED	ZS-1				THIS SH
					SPARE
OPEN	ZS-2				SPARE
					THIS SH

CONTACT CLOSED

MOTOR OPERATED DAMPER: HDO7801A, HDO7801B
HDO7813A, HDO7813B

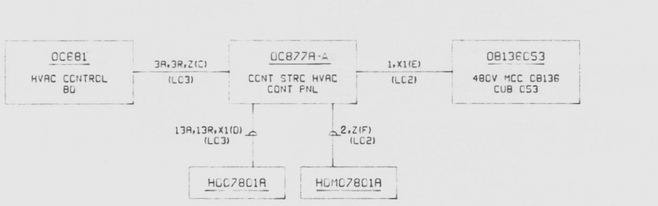

F/C-EK

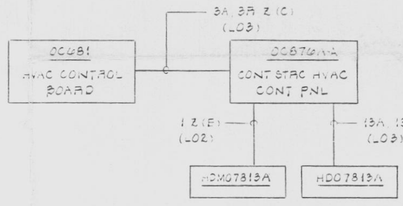

F/C - EK

NOTES:
1. FOR STANDARD SYMBOLS FOR ELECTRICAL DIAGRAMS SEE DWG. E 42.
2. FURNISHED BY FIELD PER SPEC. E158

THIS DOCUMENT IS UNDER PP&L ADMINISTRATIVE CONTROL. NO CHANGES CAN BE MADE WITHOUT PRIOR PP&L APPROVAL.

CONTROL ROOM A/C UNIT FAN DAMPER HDO7801A

SCHEME NO. OV1148 (SEE TABLE B) I

TABLE A

SCHEME NO.	DAMPER	DAMPER MOTOR	ESS DIV	F/C	FUSE NUMBER	FUSE LOC	CONTROL SWITCH NUMBER	CONTROL SWITCH LOC	INTLKS RELAY	INTLKS CONTACTS	INTLKS DWG	INTLKS RELAY	INTLKS CONTACTS	INTLKS DWG	TERMINAL NUMBERS CONTROL PANEL												TERMINAL NUMBERS OC681		CONTROL POWER PNL	CONTROL POWER BKR
OV1142	HDO7813A	HDM07813A	I	EK	FU-16	OC876A-A	HS07813A	OC876A-A	42X-136053	B-4	E-197 SH 1	X1SHX1-07802A	M1,T1	E-197 SH 3	OC876A-A	C-7	C-8	C-9	C-20	C-21	C-22	C-23	C-24	H-44	H-45	H-46			1Y23B	09
OV1143	HDO7813B	HDM07813B	II	FK	FU-16	OC876B-A	HS07813B	OC876B-A	42X-146062	B-4	E-197 SH 1	X1SHX1-07802B	M1,T1	E-197 SH 7	OC876B-A	C-7	C-8	C-9	C-20	C-21	C-22	C-23	C-24	H-3	H-32	H-33			1Y24B	09

TABLE B

SCHEME NO.	DAMPER	DAMPER MOTOR	ESS DIV	F/C	FUSE NUMBER	FUSE LOC	STARTER AUX CONTACT INTLK LOC	STARTER AUX CONTACT INTLK CONTACTS	STARTER AUX CONTACT INTLK DWG	TERMINAL NUMBERS RELAY PANEL												OC681			CONTROL POWER PNL	CONTROL POWER BKR	INTLK RELAY NO	INTLK CONTACT	INTLK DWG.
OV1148	HDO7801A	HDM07801A	I	EK	FU-2	OC877A-A	OB13EC53	53,54	E-197 SH 2	OC877A-A	A-30	A-31	A-32	A-33	A-34	A-35	A-36	A-37	A-38	A-39	-28	1-29	1-30	1Y23B	09	42X 136053	3 5	THIS SH
OV1149	HDO7801B	HDM07801B	II	FK	FU-2	OC877B-A	OB14E062	53,54	E-197 SH 2	OC877B-A	A-30	A-31	A-32	A-33	A-34	A-35	A-36	A-37	A-38	A-39	-28	1-29	1-30	1Y24B	09	42X 146062	3 5	THIS SH

CONTROL STRUCTURE EMER FRESH AIR DAMPER HDO7813A

SCHEME NO. OV1142 (SEE TABLE A) I

Doc Control # 8503220117 -185
Date 3/10/83 of Document:
REGULATORY DOCKET FILE

UNCONTROLLED DOCUMENT FOR REFERENCE ONLY

PRC APERTURE CARD

NO.	DATE	REVISIONS	BY	CHK	DESIGN SUPV	ENG	PROJ ENGR	APP'D
6	7/16/84	REVISED PER DCN #2 (SFR 1519)	TM	KJ	TC	MM	SM	
5	4/7/83	REV PANEL NO & RELAY NO (DCR42)	RKL	MM	TC	MM	SM	
4	3/23/83	REVISED TO INCORP. DCN #1 (SFR1818)	JK	KJ	TC	MM	SM	
3	12/17/82	REVISED HOLDS ADDED TERM.	TM	KJ	TC	MM	SM	
2	7/16/82	ISSUED "AS BUILT"	VA	RKL	TC	/	SM	
1	3/1/82	REVISED RELAY X1SHX1 PER DCR-536 (DCP-536, REV. 0)	RKL	MM	TC	MM	SM	
0	1/1/82	ISSUED FOR CONSTRUCTION	JC	MM	TC	MM	SM	

SCALE NONE | DESIGNED J.BURROR | DRAWN

PENNSYLVANIA POWER & LIGHT COMPANY
ALLENTOWN, PENNSYLVANIA
SUSQUEHANNA STEAM ELECTRIC STATION – UNIT 1, UNIT 2

BECHTEL – SAN FRANCISCO

SCHEMATIC DIAGRAM HVAC
CONTROL ROOM EMER FRESH AIR SYS
A/C UNIT DAMPERS - COMMON

JOB No.	DRAWING No.	REV.
8856	E-197 SH 11	8

D-107346 SH 11

22 X 34 "D" SIZE

24X

I certify that the microfilmed image contained on this microform were made in the normal and regular course of business. This is a true, full, correct and complete reproduction and replacement for and/or in lieu of original documents generated by the Bechtel group of companies.
Signed: JACINTO Camera Operator — Date: 6-24-82 Camera Type: MRC 1

D

This drawing and the design it covers are the property of BECHTEL. They are issued upon the express understanding that they will not be reproduced, copied, loaned, exhibited, nor used except in the limited way and private use permitted by any written consent given by the holder to the borrower.

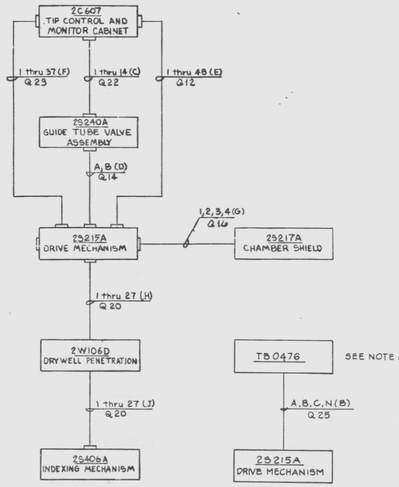

F/C NK
TIP SYSTEM DRIVE CONTROL
SCHEME Nº 2Q1206
REF. SH. 2
TYP OF 5 (SEE TABLE A)
(SEE NOTE 2)

F/C NP
TIP SYSTEM DRIVE POWER
SCHEME Nº 2Q1206
REF. SH 2
SEE NOTE 2
TYP OF 5 (SEE TABLE A)

TABLE A

SCHEME Nº	CONTROL PANEL	GUIDE TUBE VALVE ASSY	DRIVE MECHANISM	480 VAC POWER SUPPLY	CHAMBER SHIELD	DRYWELL PENETRATION	INDEXING MECHANISM	TERMINAL BOX
2Q1206	2C607	2S240A	2S215A	2B263	2S217A	2W106D	2S406A	TB0476
2Q1207	2C607	2S240B	2S215B		2S217B	2W106D	2S406B	
2Q1208	2C607	2S240C	2S215C		2S217C	2W106D	2S406C	
2Q1209	2C607	2S240D	2S215D		2S217D	2W106C	2S406D	
2Q1210	2C607	2S240E	2S215E		2S217E	2W106C	2S406E	↓

TIP SYSTEM INSTRUMENT AC SUPPLY
(REF. SH. 1)

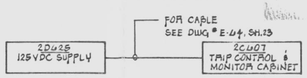

TIP SYSTEM 125VDC SUPPLY
(REF. SH. 3)

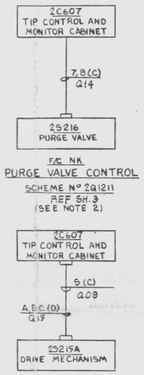

F/C NK
PURGE VALVE CONTROL
SCHEME Nº 2Q1211
REF SH. 3
(SEE NOTE 2)

F/C NM
TIP SYSTEM X-Y RECORDER
SCHEME Nº 2Q1212
REF. SH. 3
TYP OF 5 (SEE TABLE B)

TABLE B

SCHEME Nº	CONTROL PANEL	DRIVE MECHANISM
2Q1212	2C607	2S215A
2Q1213	2C607	2S215B
2Q1214	2C607	2S215C
2Q1215	2C607	2S215D
2Q1216	2C607	2S215E

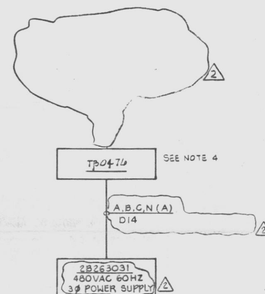

TIP SYSTEM DRIVE POWER
SCHEME Nº 2Q1206
REF. SH. 2

NOTES
1. FOR STANDARD SYMBOLS FOR ELECTRICAL DRAWINGS SEE 8856-E-42.
2. #16 AND/OR #20 WIRE IS USED FOR POWER AND CONTROL WHERE SERIES 69 AMPHENOL CONNECTORS ARE USED.
3. DESIGN BASED ON G.E. APED ELEMENTARY 781E413AE (8856-M1-C51-17) SH. 1, 2 & 3.
4. TB0476 SHOULD BE LOCATED AS CLOSE TO 2S215A AS POSSIBLE.

D
Cont. # 8303290117-182
Date 3/10/83 of Document:
REGULATORY DOCKET FILE

PRC APERTURE CARD

REFERENCE DWG'S.	
BECHTEL NO.	PL NO.
E-42	A-107191
E-11	E-107160
E-19	E-107164
8856-M1-C51	FF122010
E-44	A-107213

No.	DATE	REVISIONS	BY	CHK'D	SUPV'G ENG'R	PROJ MGR	APP'D
2							
1							
A	3/9/83	REVISED PER DCP 562.	REL				
A	1/14/83	ADDED NOTE 4 & REVISED AS SHOWN	L.	C.H.			
A	11/4/82	ISSUED FOR CONSTRUCTION	C.H.	C.H.			

SCALE: NONE | DESIGNED C.S. HOU | DRAWN M.P. SANTOS | CHK'D

PENNSYLVANIA POWER & LIGHT COMPANY
ALLENTOWN, PENNSYLVANIA
SUSQUEHANNA STEAM ELECTRIC STATION – UNIT 1, UNIT 2

BECHTEL – SAN FRANCISCO

BLOCK DIAGRAM
NEUTRON MONITORING SYSTEM
(TIP SYSTEM) UNIT 2

JOB No.	DRAWING No.	REV.
8856	E-177 SH 8	2
D-107326 SH8		

UNCONTROLLED DOCUMENT FOR REFERENCE ONLY

G2TLQ BLK DIAG NEUTRON MON SYS 1 M

24X
I certify that the microfilmed image contained on this microfilm were made in the normal and regular course of business. This is a true, full, correct and complete reproduction and replacement for and/or in lieu of original documents made by the Bechtel group of companies.
DANNY Date 2-16-83 Camera Type MRG 1

D

This drawing and the design it covers are the property of BECHTEL. They are merely loaned and on the borrower's express agreement that they will not be reproduced, copied, loaned, exhibited, nor used except in the limited way and private use permitted by any written consent given by the lender to the borrower.

XV-B21-F009 | XV-B21-F070A | XV-B21-F073A | XV-B21-F070B | XV-B21-F073B | XV-B21-F070C | XV-B21-F073C | XV-B21-F070D | XV-B21-F073D | XV-B21-F041 | XV-B21-F043A | XV-B21-F047A

1A,1B,1D,P1, P2,X1,Z(A) (LO7) | 2A,2B,2D,P1, P2,X2,Z(B) (LO7) | 3A,3B,3D,P1, P2,X3,Z(C) (LO7) | 4A,4B,4D,P1, P2,X4,Z(D) (LO7) SEE NOTE 7 | 5A,5B,5D,P1, P2,X5,Z(B) (LO7) | 6A,6B,6D,P1 P2,X6,Z(F) (LO7) | 7A,7B,7D,P1 P2,X7,Z(G) (LO7) | 8A,8B,8D,P1, P2,X8,Z(H) (LO7) | 9A,9B,9D,P1, P2,X9,Z(J) (LO7) | 10A,10B,10D,P1, P2,X10,Z(K) (LO7) | 11A,11B,11D,P1, P2,X11,Z(L) (LO7) SEE NOTE 5 | 12A,12B,12D,P1, P2,X12,Z(M) (LO7) SEE NOTE 5

IC692 MISCELLANEOUS SYSTEMS RECORDING PANEL

13A,13B,13D,P1, P2,X13,Z(N) (LO7) SEE NOTE 6 | 14A,14B,14D,P1, P2,X14,Z(P) (LO7) SEE NOTE 6 | 15A,15B,15D,P1, P2,X15,Z(Q) (LO7) | 16A,16B,16D,P1 P2,X16,Z(R) (LO7) | 17A,17B,17D,P1 P2,X17,Z(S) (LO7) | 18A,18B,18D,P1 P2,X18,Z(T) (LO7) | 19A,19B,19D,P1 P2,X19,Z(U) (LO7) | 20A,20B,20D,P1, P2,X20,Z(V) (LO7) | 21A,21B,21D,P1, P2,X21,Z(W) (LO7) | 22A,22B,22D,P1 P2,X22,Z(X) (LO7) | 23A,23B,23D,P1, P2,X23,Z(Y) (LO7) | 24A,24B,24D,P1, P2,X24,Z(Z) (LO7)

XV-B21-F043A | XV-B21-F039A | XV-B21-F039C | XV-B21-F039B | XV-B21-F039D | XV-B21-F033A | XV-B21-F051A | XV-B21-F039L | XV-B21-F039N | XV-B21-F039R | XV-B21-F039T | XV-B21-F033C

F/C-5K

SCHEMS No. IQ4101

TYPICAL OF 6 (SEE TABLE A)

TABLE A

SCHEMS NUMBER	DIV.	F/C	ROW	VALVE	VALVE	VALVE	VALVE	VALVE	VALVE	VALVE	VALVE	VALVE	VALVE	VALVE	VALVE	SCHEMATIC LOCATION
				CONTROL SWITCH	CONTROL SWITCH	CONTROL SWITCH	CONTROL SWITCH	CONTROL SWITCH	CONTROL SWITCH	CONTROL SWITCH	CONTROL SWITCH	CONTROL SWITCH	CONTROL SWITCH	CONTROL SWITCH	CONTROL SWITCH	
IQ4101	I	5K	1	XV-B21-F009	XV-B21-F070A	XV-B21-F073A	XV-B21-F070B	XV-B21-F073B	XV-B21-F070C	XV-B21-F073C	XV-B21-F070D	XV-B21-F073D	XV-B21-F041	XV-B21-F043A	XV-B21-F047A	B-178 SH. 2
				HS-14139	HS-14170A	HS-14173A	HS-14170B	HS-14173B	HS-14170C	HS-14173C	HS-14170D	HS-14173D	HS-14241	HS-14249A	HS-14247A	
			2	XV-B21-F043A	XV-B21-F039A	XV-B21-F039C	XV-B21-F039B	XV-B21-F039D	XV-B21-F033A	XV-B21-F051A	XV-B21-F039L	XV-B21-F039N	XV-B21-F039R	XV-B21-F039T	XV-B21-F033C	
				HS-14249A	HS-14249A	HS-14249C	HS-14249B	HS-14249D	HS-14238A	HS-14238A	HS-14238L	HS-14238N	HS-14238R	HS-14238T	HS-14238C	
IQ4102	I	5K	3	XV-B21-F010C	XV-B21-F010				⊗XV-14201	XV-B21-F037A	XV-B21-F009A	XV-B21-F009A	XV-B21-F009A	XV-B21-F010A	XV-B21-F009B	B-178 SH. 3
				HS-14251C	HS-14261	HS-14355A	HS-14355C	HS-14355F	(HS-14201)	HS-14387A	HS-14303A	HS-14304A	HS-14309A	HS-14310A	HS-14309B	
			4	XV-B21-F010B	XV-B21-F040A	XV-B21-F040C	XV-B21-F011A	XV-B21-F012A	XV-B21-F011B	XV-B21-F012B	XV-14411C	XV-14411D	XV-B21-F044A	XV-B21-F044C	XV-13516	
				HS-14310B	HS-14340A	HS-14340C	HS-14311A	HS-14312A	HS-14311B	HS-14312B	HS-14411C	HS-14411D	HS-14444A	HS-14444C	HS-13516	
IQ4103	I	5K	5	XV-13517	XV-13710A	XV-13701A	XV-13775A	XV-13776A	XV-13708A	XV-13708A	XV-B21-F017B	XV-B21-F013A	XV-B41-F024A	XV-B41-F024C	XV-13110A	B-178 SH. 4
				HS-13517	HS-13710A	HS-13701A	HS-13775A	HS-13776A	HS-13708A	HS-13708A	HS-14917B	HS-13218A	HS-13524A	HS-13524C	HS-13110A	
			6	XV-13110C	XV-13109G	XV-13109D	——	——	——	——	——	——	——	——	——	
				HS-13110C	HS-13109G	HS-13109D	HS-SPARE	HS-SPARE	HS-SPARE	HS-SPARE	HS-SPARE	HS-SPARE	HS-SPARE	HS-SPARE	HS-SPARE	
IQ4104	II	FK	1	XV-B21-F071A	XV-B21-F072A	XV-B21-F071B	XV-B21-F072B	XV-B21-F071C	XV-B21-F072C	XV-B21-F071D	XV-B21-F072D	XV-B21-F039B	XV-B21-F039D	XV-B21-F039F	XV-B21-F039H	B-178 SH. 5
				HS-14171A	HS-14172A	HS-14171B	HS-14172B	HS-14171C	HS-14172C	HS-14171D	HS-14172D	HS-14235B	HS-14235D	HS-14235F	HS-14235H	
			2	XV-B21-F053B	XV-B21-F051B	XV-B21-F039M	XV-B21-F039F	XV-B21-F039S	XV-B21-F039U	XV-B21-F053D	XV-B21-F051D	XV-B21-F053	XV-B21-F037	XV-B21-F049B	XV-B21-F047B	
				HS-14239B	HS-14251B	HS-14354M	HS-14235G	HS-14235M	HS-14239U	HS-14239D	HS-14251D	HS-14253	HS-14247	HS-14249B	HS-14247B	
IQ4105	II	FK	3	XV-B21-F004B	XV-B21-F004D	XV-B21-F016C	XV-B21-F004G	XV-B21-F010D	XV-13910B	XV-13910F	XV-13910K	XV-13910P	HS-14937B	HS-14303B	HS-14304B	B-178 SH. 6
				HS-14245B	HS-14309D	HS-14310C	HS-14309C	HS-14310D	HS-13910B	HS-13910F	HS-13910K	HS-13910P				
			4	XV-B21-F011C	XV-B21-F012C	XV-B21-F011D	XV-B21-F012D	XV-B21-F040B	XV-B21-F040D	XV-14411A	XV-14411B	XV-B21-F044B	XV-B21-F044D	XV-13775B	XV-13776	
				HS-14311C	HS-14312C	HS-14311D	HS-14312D	HS-14340B	HS-14340D	HS-14411A	HS-14411B	HS-14444B	HS-14444D	HS-13775B	HS-13776	
IQ4106	II	FK	5	XV-13777	XV-13778B	XV-13710B		XV-13708B	XV-13708B			XV-B21-F017A	XV-B21-F018B	XV-B41-F024B	XV-B41-F024D	B-178 SH. 7
				HS-13777	HS-13778B	HS-13710B	HS- SPARE	HS-13708B	HS-13708B			HS-14917A	HS-13218B	HS-13524B	HS-13524D	
			6	XV-B33-F044G	XV-13110B	XV-13110D	XV-13109A	XV-13109B	——	——	——	——	——	——	——	
				HS-14446	HS-13110B	HS-13110D	HS-13109A	HS-13109B	HS-SPARE	HS-SPARE	HS-SPARE	HS-SPARE	HS-SPARE	HS-SPARE	HS-SPARE	

7

SEE DWG J-656 FOR NAMEPLATE DETAILS

RESET

IC692 F.7

BLOCK	CONTACT No.		POSITION RESET	DRAWING No.	CONTACT BLOCK CAT. No.
1	1a 1b	1	X	9SS TABLE A	KLA1

CONTROL SWITCH: HS-14139 (TYP OF 14 SEE TABLE A)
GUTLER HAMMER TYPE E-30AA
MOMENTARY CONTACTS

G

SEE DWG J-656 FOR NAMEPLATE DETAILS

TEST

IC692 F.V

BLOCK No.	CONTACT No.		POSITION TEST	DRAWING No.
TOP	1a 1b	F		SPARE
	2a0 02b	B	X	DIV I SH 2 DIV II SH 5
BTM	3a 3b	F		SPARE
	4a0 04b	B	X	DIV I SH 2 DIV II SH 5
TOP	5a 5b	F		SPARE
	6a0 06b	B	X	DIV I SH 3 DIV II SH 6
BTM	7a 7b	F		SPARE
	8a0 08b	B	X	DIV I SH 4 DIV II SH 6

CONTROL SWITCH: HS-13700A & HS-13700B O.B. TYPE CR2940 PUSHBUTTON MOMENTARY CONTACTS

COMPUTER (E-301, SH.10) MA201

IC664

30 15-8

IC664

ALARM (E-323, SH.7) IC651-08A (15-8)

IC692

T2 — HSX-13700A (SH.2) — M2

T2 — HSX-13700B (SH.3) — M2

IC692

NOTES:

1. FOR STANDARD SYMBOLS FOR ELECTRICAL DIAGRAMS SEE DWG 8836-E-42.
2. FOR START UP NUMBERS OF INDIVIDUAL VALVES REFER TO INSTRUMENT INDEX J-700.
3. FOR SX6585 FLOW CHECK VALVE DETAILS REFER TO V/P 8836-J-92.
4. CONTACTS TO BE WIRED OUT TO A COMMON TERMINAL POINT LOCATED IN A NON-DIVISIONALIZED SECTION OF PANEL IC692.
5. CABLE CODE LO7 FOR SCHEMES IQ4101,2,3&4. CABLE CODE L17 FOR SCHEMES IQ4105&6.
6. CABLE CODE LO7 FOR SCHEMES IQ4101,2,3,4&6. CABLE CODE L17 FOR SCHEME IQ4105.
7. CABLE CODE LO7 FOR SCHEMES IQ4101,2,3,4&5. CABLE CODE L17 FOR SCHEME IQ4106.

Docket # 50-387
Control # 8305220117-183
Date 5/10/83 of Document:
REGULATORY DOCKET FILE

IC692 GG-70

FU-9 5A | FU-11 5A | FU-13 5A | 555 5-171 SH. 1

DIV I 120V INST AC AT IY216

5-178 SH. 2 | 5-178 SH. 3 | 5-178 SH. 4

IC692 GG-71

120V 60HZ | 312VA POWER SUPPLY | 24V DC

FU-1 5A | FU-3 5A | FU-5 5A | FU-7 5A

5-178 SH. 2 | 5-178 SH. 2 | 5-178 SH. 3 | 5-178 SH. 4

DIV I POWER DISTRIBUTION [I]
SCHEMS No. IQ4107

IY216 DIV I 120V INST AC BKR #10

FOR CABLE ROUTING SEE DWG # E-64 SH 15

IC692 MISC. SYSTEM RECORDING PNL

F/C-5K

IC692 FF-73

FU-10 5A | FU-12 5A | FU-14 5A | 555 5-171 SH. 2

DIV II 120V INST AC AT IY226

5-178 SH. 9 | 5-178 SH. 6 | 5-178 SH. 7

IC692 FF-74

120V 60HZ | 312VA POWER SUPPLY | 24V DC

FU-2 5A | FU-4 5A | FU-6 5A | FU-8 5A

5-178 SH. 3 | 5-178 SH. 5 | 5-178 SH. 6 | 5-178 SH. 7

DIV II POWER DISTRIBUTION [II]
SCHEMS No. IQ4108

IY226 DIV II 120V INST AC BKR #13

FOR CABLE ROUTING SEE DWG # E-64 SH 15

IC692 MISC. SYSTEM RECORDING PNL

F/C-FK

PRC APERTURE CARD

UNCONTROLLED DOCUMENT FOR REFERENCE ONLY

REFERENCE DWG'S.	
BECHTEL NO.	PL. NO.
B-42	A-107191
J-157 SH 6	B-102447 SH 6
J-700	A-109813
WP J-92	FF-104920
B-171	D-107320
J-656	B-103788

NO.	DATE	REVISIONS	BY	CHK	ENGR	PROJ ENGR	APP'S
5	12/9/81	REVISED TO INCORP. NCR-5804, MOVED TERM NO'S (SCR=5)	EWO				
4	1/24/79	REMOVED XV-16101B1F2, XV-16104A1F2 PER J-157 SH. 6A & 6B	JCJ				
3	10/7/77	ADDED XV-13910B, F, K, P PER LOGIC DIA. J157 REV. 3	CH				
2	7/11/77	REV'D TO INCORP. IDCN #2 (DCP 80881R/0)	VA				
1	7/3/77	INCORP IDCN #1 (SCP 80, IE, REV. 0)	CHW				
0	3/14/75	ISSUED FOR CONSTRUCTION	LN				

SCALE NONE | DESIGNED A.VAUSS | DRAWN S.THONG | CHKD ENGR.

PENNSYLVANIA POWER & LIGHT COMPANY
ALLENTOWN, PENNSYLVANIA
SUSQUEHANNA STEAM ELECTRIC STATION - UNIT 1, UNIT 2

BECHTEL - SAN FRANCISCO

BLOCK DIAGRAM EXCESS FLOW CHECK VALVES UNIT 1

JOB No.	DRAWING No.	REV.
8856	E-178 SH 1	7
D-107327 SH 1		

EXCESS FLOW CHECK VALVES

22 X 34 "D" SIZE

24X

I certify that the microfilmed image contained on this microform were made in the normal and regular course of business. This is a true, full, correct and complete reproduction and replacement for and/or in lieu of original documents generated by the Bechtel group of companies.
Signature DANNY Date 7-7-81 Camera Type MRG I
Camera Operator

D

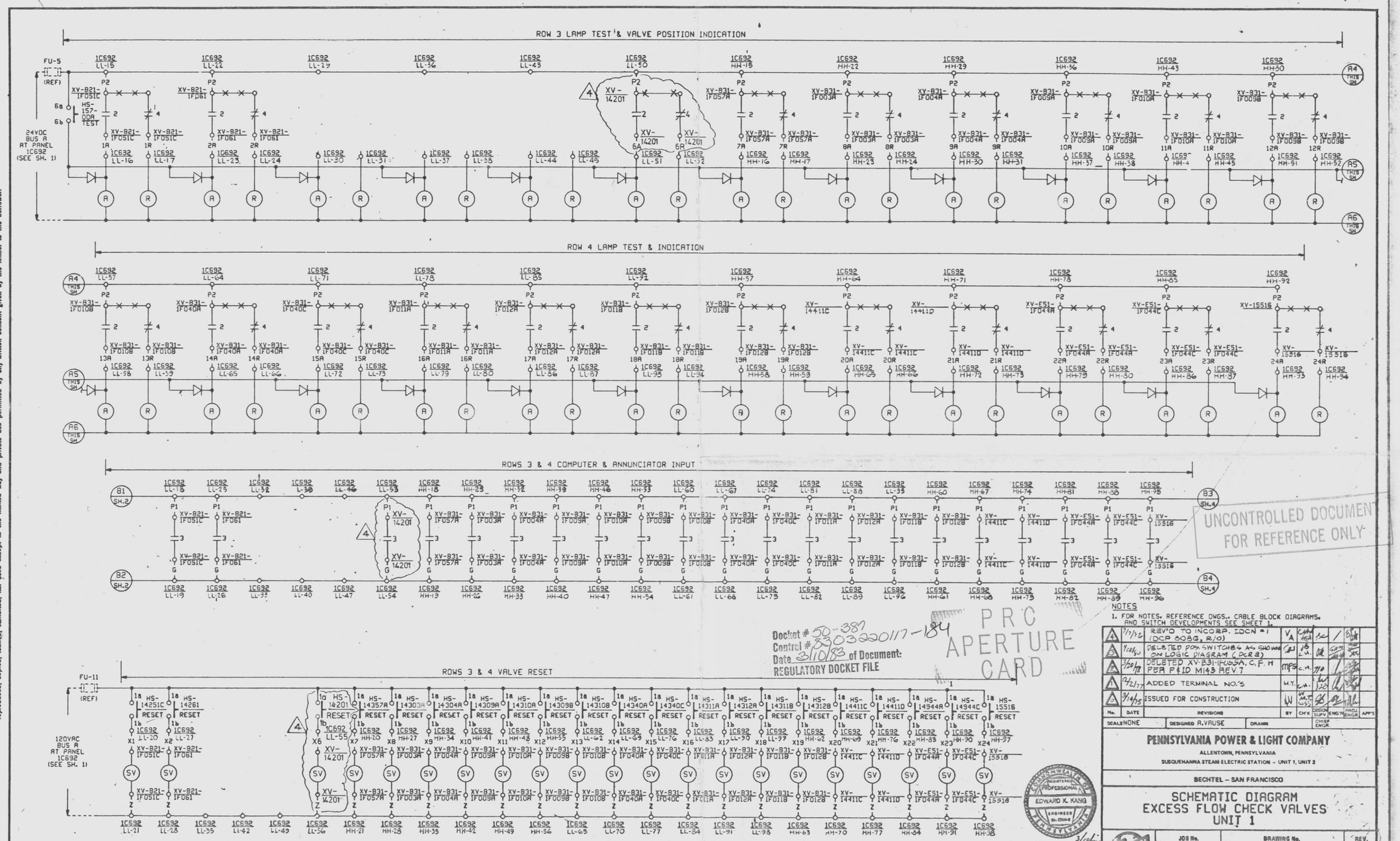

DIV I EXCESS FLOW CHECK VALVES - ROWS 3 & 4 [I]

SCHEME NO. 1Q4102

G1T01 SCHEM EXCESS FLOW CK VLVES W

NOTES

1. FOR NOTES, REFERENCE DWGS., CABLE BLOCK DIAGRAMS, AND SWITCH DEVELOPMENTS SEE SHEET 1.

No.	DATE	REVISIONS	BY	CHK	DESIGN SUPV	ENG'R	PROJ ENGR	APP'S
4	7/7/76	REV'D TO INCORP. IDCN #1 (DCP 808G, R/O)	VA	CMA		/		
3	4/28/80	DELETED POS. SWITCHES AS SHOWN ON LOGIC DIAGRAM (DCR 8)						
2	3/20/78	DELETED XV-B31-1F055A, C, F, H PER P&ID M143 REV. 7	MPS	C.H.				
1	12/2/77	ADDED TERMINAL NO.'S	M.Y.	C.H.				
0	3/14/75	ISSUED FOR CONSTRUCTION						

SCALE NONE | DESIGNED A. VAUSE | DRAWN

PENNSYLVANIA POWER & LIGHT COMPANY

ALLENTOWN, PENNSYLVANIA

SUSQUEHANNA STEAM ELECTRIC STATION – UNIT 1, UNIT 2

BECHTEL – SAN FRANCISCO

SCHEMATIC DIAGRAM
EXCESS FLOW CHECK VALVES
UNIT 1

JOB No.	DRAWING No.	REV.
8856	E-178 SH 3	4

D-107327 SH 3

UNCONTROLLED DOCUMENT FOR REFERENCE ONLY

Docket # 50-387
Control # 8303220117-184
Date 3/10/83 of Document:
REGULATORY DOCKET FILE

PRC APERTURE CARD

This drawing and the design it covers are the property of BECHTEL. They are merely loaned and on the borrower's express agreement that they will not be reproduced, copied, loaned, exhibited, nor used except in the limited way and private use permitted by any written consent given by the lender to the borrower.

24X

I certify that the microfilmed image contained on this microform were made in the normal and regular course of business. This is a true, full, correct and complete reproduction and replacement for and/or in lieu of original documents generated by the Bechtel group of companies.

Signed DANNY Date 7-[illegible] Camera Type MRG I
Camera Operator

D

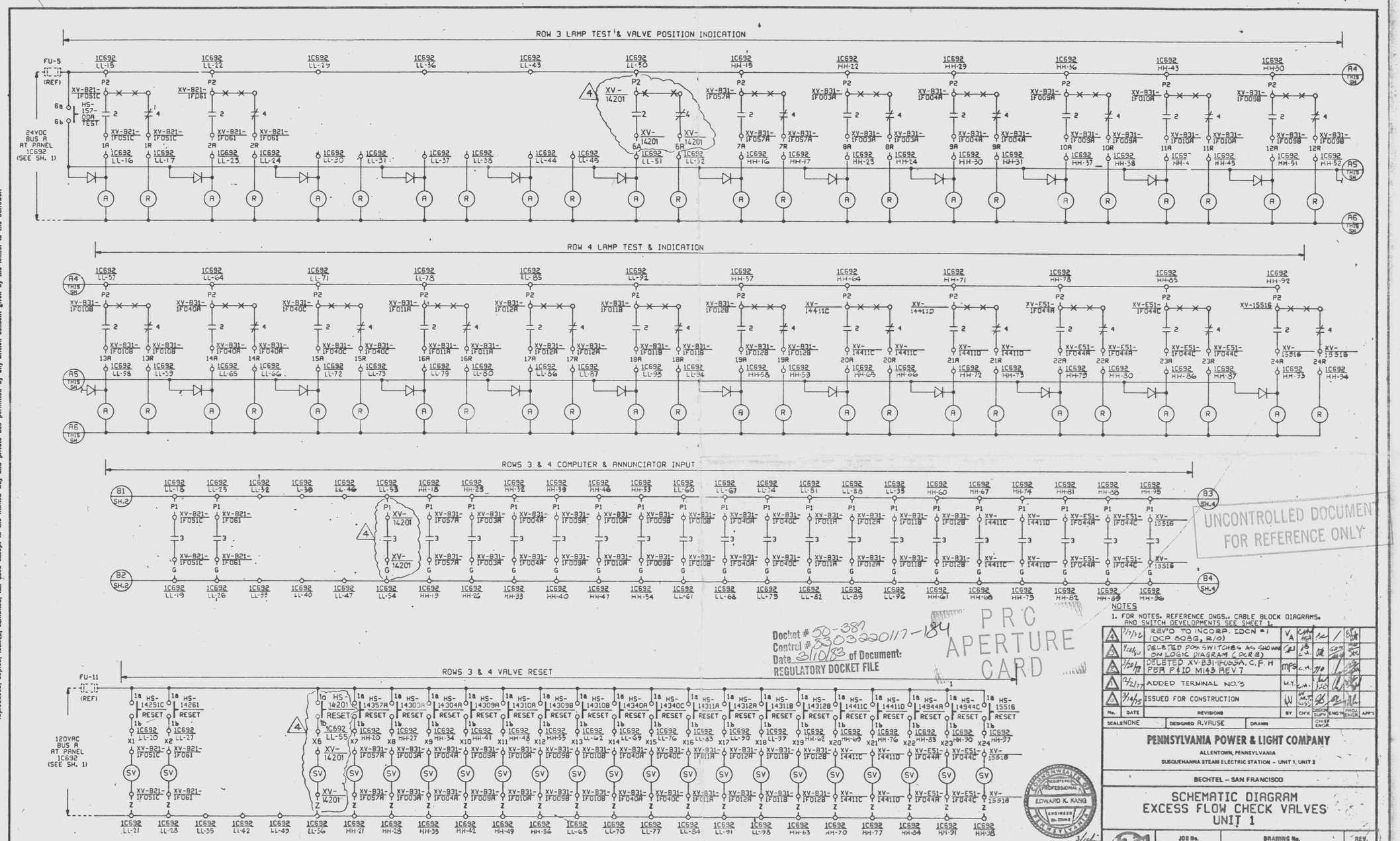

DIV I EXCESS FLOW CHECK VALVES - ROWS 3 & 4 [I]

SCHEME NO. 1Q4102

G1T01 SCHEM EXCESS FLOW CK VLVES W

NOTES

1. FOR NOTES, REFERENCE DWGS., CABLE BLOCK DIAGRAMS, AND SWITCH DEVELOPMENTS SEE SHEET 1.

No.	DATE	REVISIONS	BY	CHK	DESIGN SUPV	ENG'R	PROJ ENGR	APP'S
4	7/7/76	REV'D TO INCORP. IDCN #1 (DCP 808G, R/O)	VA	CMA		/		
3	4/28/80	DELETED POS. SWITCHES AS SHOWN ON LOGIC DIAGRAM (DCR 8)						
2	3/20/78	DELETED XV-B31-1F055A, C, F, H PER P&ID M143 REV. 7	MPS	C.M.				
1	12/2/77	ADDED TERMINAL NO.'S	M.Y.	C.M.				
0	3/14/75	ISSUED FOR CONSTRUCTION						

SCALE NONE | DESIGNED A. VAUSE | DRAWN

PENNSYLVANIA POWER & LIGHT COMPANY

ALLENTOWN, PENNSYLVANIA

SUSQUEHANNA STEAM ELECTRIC STATION – UNIT 1, UNIT 2

BECHTEL – SAN FRANCISCO

SCHEMATIC DIAGRAM
EXCESS FLOW CHECK VALVES
UNIT 1

JOB No.	DRAWING No.	REV.
8856	E-178 SH 3	4

D-107327 SH 3

UNCONTROLLED DOCUMENT FOR REFERENCE ONLY

Docket # 50-387
Control # 8303220117-184
Date 3/10/83 of Document:
REGULATORY DOCKET FILE

PRC APERTURE CARD

COMMONWEALTH OF PENNSYLVANIA REGISTERED PROFESSIONAL ENGINEER EDWARD K. KANG

3/10/75

This drawing and the design it covers are the property of BECHTEL. They are merely loaned and on the borrower's express agreement that they will not be reproduced, copied, loaned, exhibited, nor used except in the limited way and private use permitted by any written consent given by the lender to the borrower.

24X

I certify that the microfilmed image contained on this microform were made in the normal and regular course of business. This is a true, full, correct and complete reproduction and replacement for and/or in lieu of original documents generated by the Bechtel group of companies.

Signed DANNY Date 7-[illegible] Camera Type MRG I
Camera Operator

D

This drawing and the design it covers are the property of BECHTEL. They are merely loaned and on the borrower's express agreement that they will not be reproduced, copied, loaned, exhibited, nor used except in the limited way and private use permitted by any written consent given by the lender to the borrower.

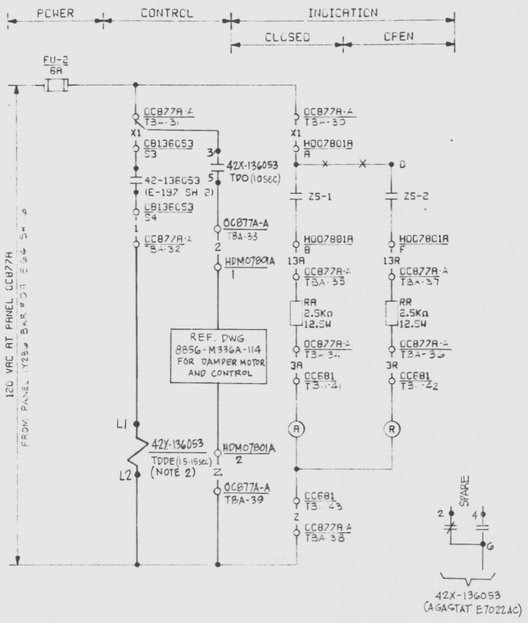

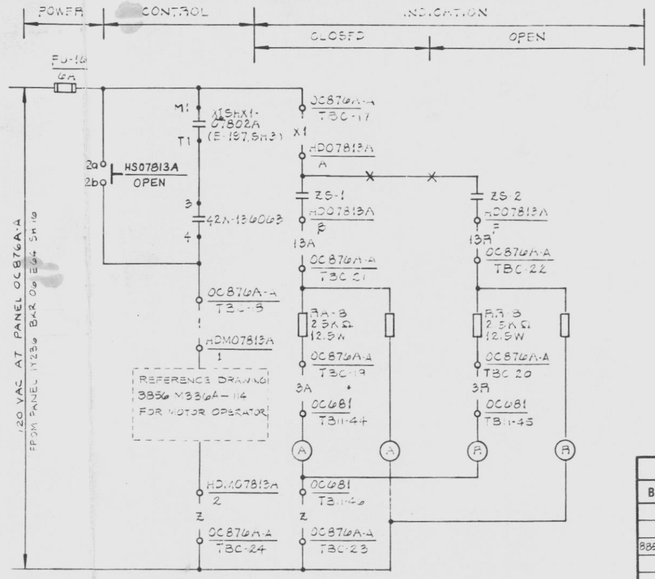

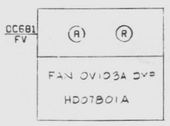

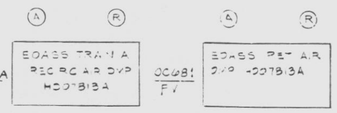

SWITCH DEVELOPMENT

BLOCK No.	CONTACT No.	POSITION	OPEN	CLOSE	DRAWING No.
TOP	1A 1B	F		X	SPARE
	2A 2B	B	X		THIS SH

SELECTOR SWITCH: HS07813A, HS07813B
GE TYPE CR2940
MAINTAINED CONTACTS

REFERENCE DWG'S.	
BECHTEL NO.	PL. NO.
E-42	A-107191
1-178	B-106518
8856-M336A-114	SF-108860

- VALVE LIMIT SWITCH DEVELOPMENT

SWITCH	CONTACT	100% OPEN	INTERMEDIATE	100% CLOSED	CONTACT USED
CLOSED	ZS-1				THIS SH
					SPARE
OPEN	ZS-2				SPARE
					THIS SH

CONTACT CLOSED

MOTOR OPERATED DAMPER: HDO7801A, HDO7801B
HDO7813A, HDO7813B

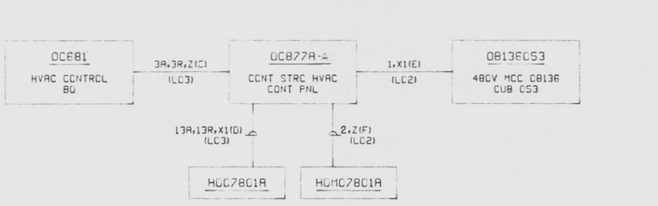

F/C-EK

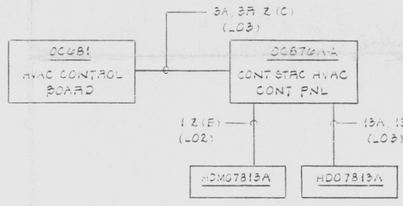

F/C - EK

NOTES:
1. FOR STANDARD SYMBOLS FOR ELECTRICAL DIAGRAMS SEE DWG. E 42.
2. FURNISHED BY FIELD PER SPEC. E158

THIS DOCUMENT IS UNDER PP&L ADMINISTRATIVE CONTROL. NO CHANGES CAN BE MADE WITHOUT PRIOR PP&L APPROVAL.

CONTROL ROOM A/C UNIT FAN DAMPER HDO7801A

SCHEME NO. OV1148 (SEE TABLE B) I

TABLE A

SCHEME NO.	DAMPER	DAMPER MOTOR	ESS DIV	F/C	FUSE NUMBER	FUSE LOC	CONTROL SWITCH NUMBER	CONTROL SWITCH LOC	INTLKS RELAY	INTLKS CONTACTS	INTLKS DWG	INTLKS RELAY	INTLKS CONTACTS	INTLKS DWG	TERMINAL NUMBERS CONTROL PANEL												TERMINAL NUMBERS OC681		CONTROL POWER PNL	CONTROL POWER BKR
OV1142	HDO7813A	HDM07813A	I	EK	FU-16	OC876A-A	HS07813A	OC876A-A	42X-136053	B-4	E-197 SH 1	X1SHX1-07802A	M1,T1	E-197 SH 3	OC876A-A	C-7	C-8	C-9	C-20	C-21	C-22	C-23	C-24	H-44	H-45	H-46			1Y23B	09
OV1143	HDO7813B	HDM07813B	II	FK	FU-16	OC876B-A	HS07813B	OC876B-A	42X-146062	B-4	E-197 SH 1	X1SHX1-07802B	M1,T1	E-197 SH 7	OC876B-A	C-7	C-8	C-9	C-20	C-21	C-22	C-23	C-24	H-3	H-32	H-33			1Y24B	09

TABLE B

SCHEME NO.	DAMPER	DAMPER MOTOR	ESS DIV	F/C	FUSE NUMBER	FUSE LOC	STARTER AUX CONTACT INTLK LOC	STARTER AUX CONTACT INTLK CONTACTS	STARTER AUX CONTACT INTLK DWG	TERMINAL NUMBERS RELAY PANEL												OC681			CONTROL POWER PNL	CONTROL POWER BKR	INTLK RELAY NO	INTLK CONTACT	INTLK DWG.
OV1148	HDO7801A	HDM07801A	I	EK	FU-2	OC877A-A	OB13EC53	53,54	E-197 SH 2	OC877A-A	A-30	A-31	A-32	A-33	A-34	A-35	A-36	A-37	A-38	A-39	-28	1-29	1-30	1Y23B	09	42X 136053	3 1 5	THIS SH
OV1149	HDO7801B	HDM07801B	II	FK	FU-2	OC877B-A	OB14E062	53,54	E-197 SH 2	OC877B-A	A-30	A-31	A-32	A-33	A-34	A-35	A-36	A-37	A-38	A-39	-28	1-29	1-30	1Y24B	09	42X 146062	3 1 5	THIS SH

GAC20 SCREEN CLEANER FRESH AIR SYS

NO.	DATE	REVISIONS	BY	CHK	DESIGN SUPV	ENG	PROJ ENGR	APP'D
6	7/16/81	REVISED PER DCN #2 (SFR 1519)	TM	RL	TC	MM	SH	
5	4/1/81	REV. PANEL NO & RELAY NO (DCR42)	R.L.	TM	TC	MM	SH	
4	12/31/80	REVISED TO INCORP. DCN #1 (SFR1818)	DK	TM	TC	MM	SH	
3	12/12/79	REVISED HOLDS ADDED TERM.	TM	RL	TC	MM	SH	
2	7/1/78	ISSUED "AS BUILT"	VA	RL	TC	MM	SH	
1	1/1/77	REVISED RELAY X1SHX1 PER DCR-536 (DCP-536, REV. 0)	RAL	MT	TC	MM	SH	
0	11/1/76	ISSUED FOR CONSTRUCTION	JC	MT	TC	MM	SH	

SCALE NONE | DESIGNED J.BURROR | DRAWN

PENNSYLVANIA POWER & LIGHT COMPANY
ALLENTOWN, PENNSYLVANIA
SUSQUEHANNA STEAM ELECTRIC STATION – UNIT 1, UNIT 2

BECHTEL – SAN FRANCISCO

SCHEMATIC DIAGRAM HVAC CONTROL ROOM EMER FRESH AIR SYS · A/C UNIT DAMPERS - COMMON

JOB No.	DRAWING No.	REV.
8856	E-197 SH 11	8

D-107346 SH 11

22 X 34 "D" SIZE

24X
I certify that the microfilmed image contained on this microform were made in the normal and regular course of business. This is a true, full, correct and complete reproduction and replacement for and/or in lieu of original documents generated by the Bechtel group of companies.
Signed: JACINTO Camera Operator — Date: 6-24-82 Camera Type: MRG 1
PRC APERTURE CARD
UNCONTROLLED DOCUMENT FOR REFERENCE ONLY
Doc Control # 8306220117 -185
Date 3/10/83 of Document:
REGULATORY DOCKET FILE
D

This drawing and the design it covers are the property of BECHTEL. They are merely loaned and on the borrower's express agreement that they will not be reproduced, copied, loaned, exhibited, nor used except in the limited way and private use permitted by any written consent given by the lender to the borrower.

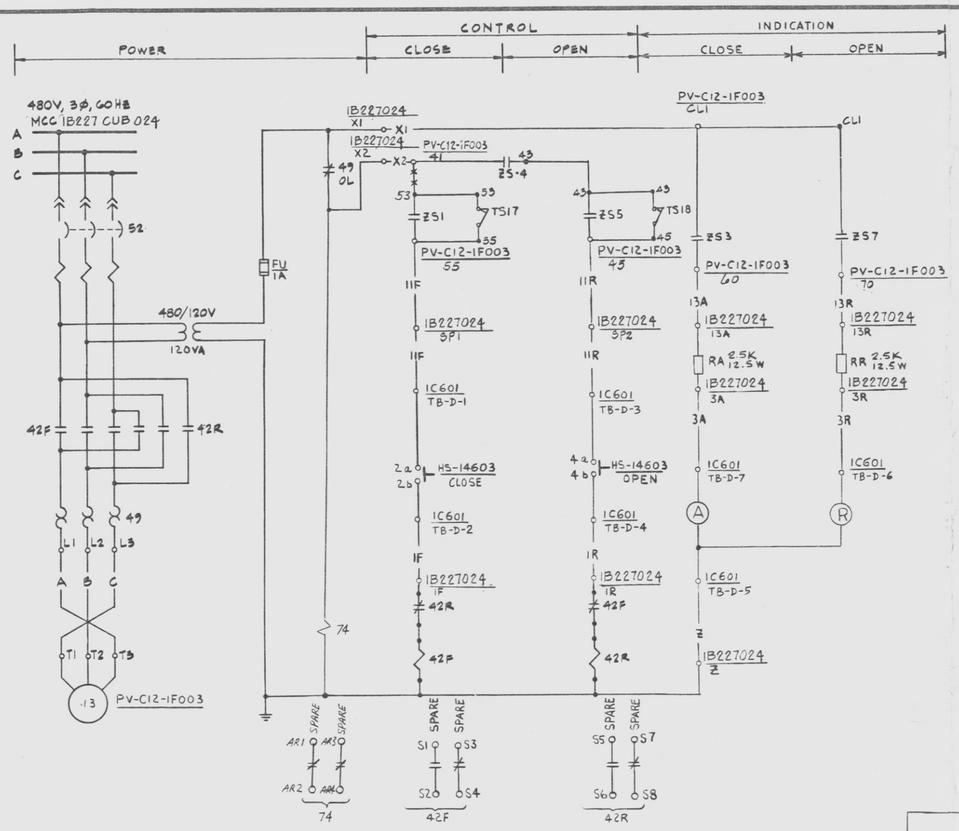

DRIVE WATER PRESSURE THROTTLING VALVE PV-C12-1F003

SCHEME 1Q0302

REFERENCE DWG'S.	
BECHTEL NO.	PL. NO.
E-42	A107191
M1-C12-108	FF-118250

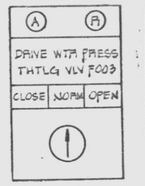

1C601 F.V.

BLOCK No.	CONTACT No.			POSITION CLOSE	POSITION NORM	POSITION OPEN	DRAWING No.
TOP	1a 1b	F			X	X	SPARE
	2a 2b	B		X			THIS SHEET
BTM	3a 3b	F		X	X		SPARE
	4a 4b	B				X	THIS SHEET

CONTROL SWITCH : HS-14603
GENERAL ELECTRIC TYPE CR2940
MOMENTARY CONTACTS WITH SPRING RETURN TO NORMAL

VALVE LIMIT SWITCH DEVELOPMENT

CONTACTS		100% OPEN	INTERMEDIATE	100% CLOSED	CONTACT USED
ZS-1	53 1 55				THIS SHEET
ZS-2	0 1 0				SPARE
ZS-3	60 1 CL1				THIS SHEET
ZS-4	41 0 1 43				THIS SHEET
ZS-5	43 0 1 45				THIS SHEET
ZS-6	0 1 0				SPARE
ZS-7	CL0 1 70				THIS SHEET
ZS-8	0 1 0				SPARE
TS-17	53 55	OPEN ON HIGH CLOSING TORQUE			
TS-18	43 45	OPEN ON HIGH OPENING TORQUE			
	CONTACT CLOSED				

PV-C12-1F003

NOTES

1. ALL DEVICE NO'S TO BE SUFFIXED BY STARTER LOCATION NO. UNLESS NOTED OTHERWISE.
2. FOR STANDARD SYMBOLS FOR ELECTRICAL DIAGRAMS SEE DWG. E-42.
3. DESIGN BASED ON G.E. APED ELEMENTARY DIAGRAM DWG #791E407WJ (M1-C12-108)

PRC APERTURE CARD

THIS DOCUMENT IS UNDER PP&L ADMINISTRATIVE CONTROL. NO CHANGES CAN BE MADE WITHOUT PRIOR PP&L APPROVAL.

NO.	DATE	REVISIONS	BY	CHKD	DESIGN SUPV.	ENGR	PROJ ENGR	APPR
4	10/4/83	REVISED WIRE TERMINATION PER SPR #1437, ADDED TAPEWAY TO FROM AS BUILT, REVISED DCN #3	JW					
3	5/11/79	ADDED TERMINAL NUMBERS, DELETED LIMIT SWITCH PV-C12-1F003 CONTACT ZS-9, 10, 11, 12, 13, 14, 15, 16	L. L					
2	5/19/78	ISSUED "AS BUILT"	TJY					
1	9/11/76	REV TO INCORP IDCN# 1R (DCP 8032 REV 0) INCORP DCN#1 (DCR 208 & QAR-F-690)	RS					
0	5/23/75	ISSUED FOR CONSTRUCTION	JD					
A	3/24/75	ISSUED FOR INFORMATION	JD					

SCALE NONE | DESIGNED J. DUDDY | DRAWN W.Y. CHAN | CHIEF ENGR

PENNSYLVANIA POWER & LIGHT COMPANY
ALLENTOWN, PENNSYLVANIA
SUSQUEHANNA STEAM ELECTRIC STATION - UNIT 1, UNIT 2

BECHTEL - SAN FRANCISCO

SCHEMATIC DIAGRAM
CONTROL ROD DRIVE HYDRAULIC SYS.
PRESSURE THROTTLING VALVES UNIT 1

JOB No.	DRAWING No.	REV.
8856	E-169 SH4	6
D-107318 SH 4		

22 x 34 "D" SIZE

Docket # 50-387
Control # 8303220117-182
Date 3/10/83 of Document:
REGULATORY DOCKET FILE

UNCONTROLLED DOCUMENT FOR REFERENCE ONLY

EDWARD K. KANG REGISTERED PROFESSIONAL ENGINEER 17530-E COMMONWEALTH OF PENNSYLVANIA

5/23/75

GITO SCHEM CRD PRESS CONT VLVES W

24X

I certify that the microfilmed image contained on this microform were made in the normal and regular course of business. This is a true, full, correct and complete reproduction and replacement for and/or in lieu of original documents generated by the Bechtel group of companies.
Signed JACINTO Camera Operator Date 6-17-82 Camera Type MRG I

D

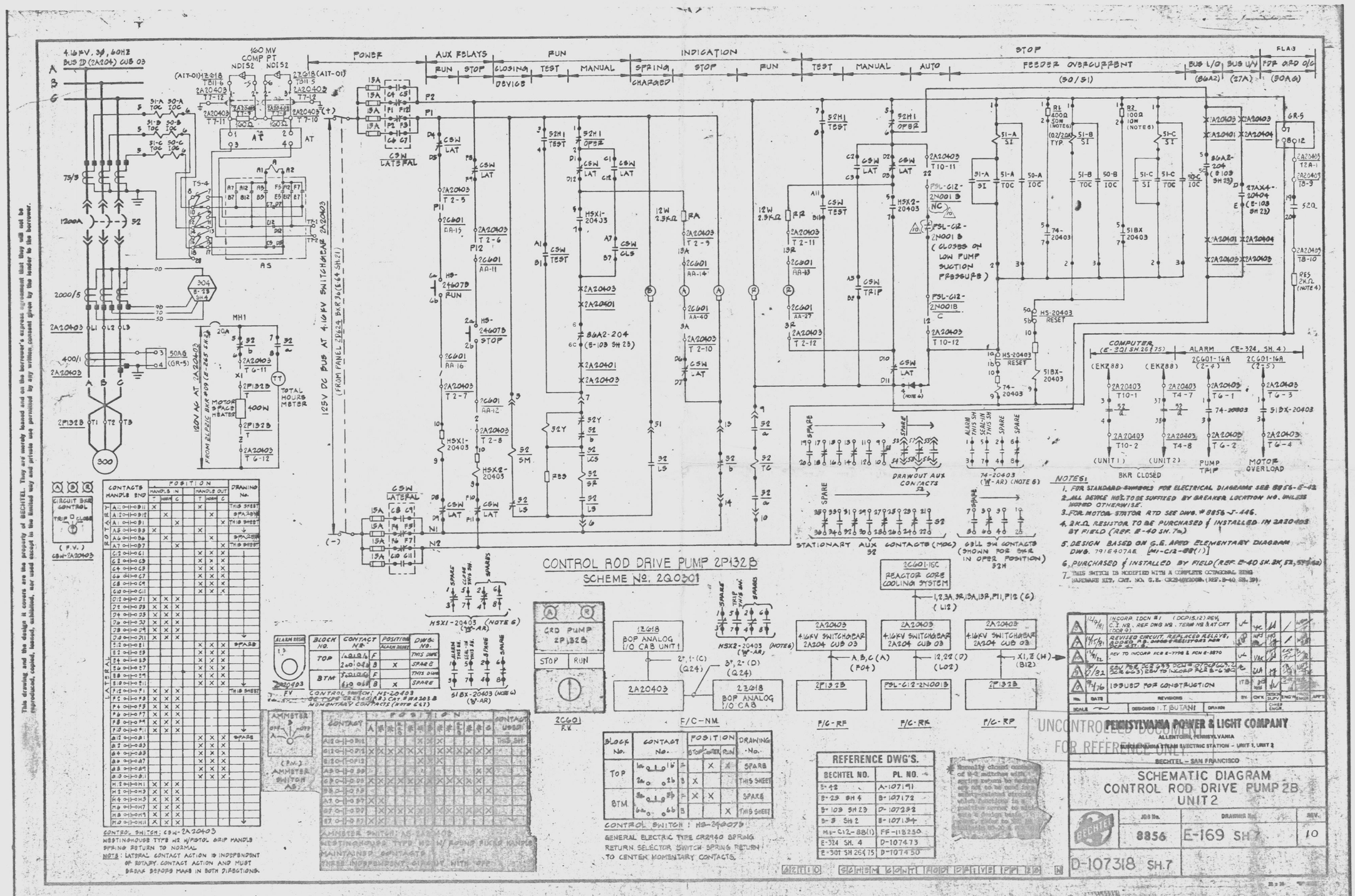

124X
I certify that the microfilmed image contained on this microform were made in the normal and regular course of business. This is a true, full, correct and complete reproduction and replacement for and/or in lieu of original documents generated by the Bechtel group of companies.
Signed _____ Date 12/29/82 Camera Type _____
Camera Operator
PRC APERTURE CARD
Docket # 50-387
Control # 8303220117-187
Date 3/10/83 of Document:
REGULATORY DOCKET FILE
D