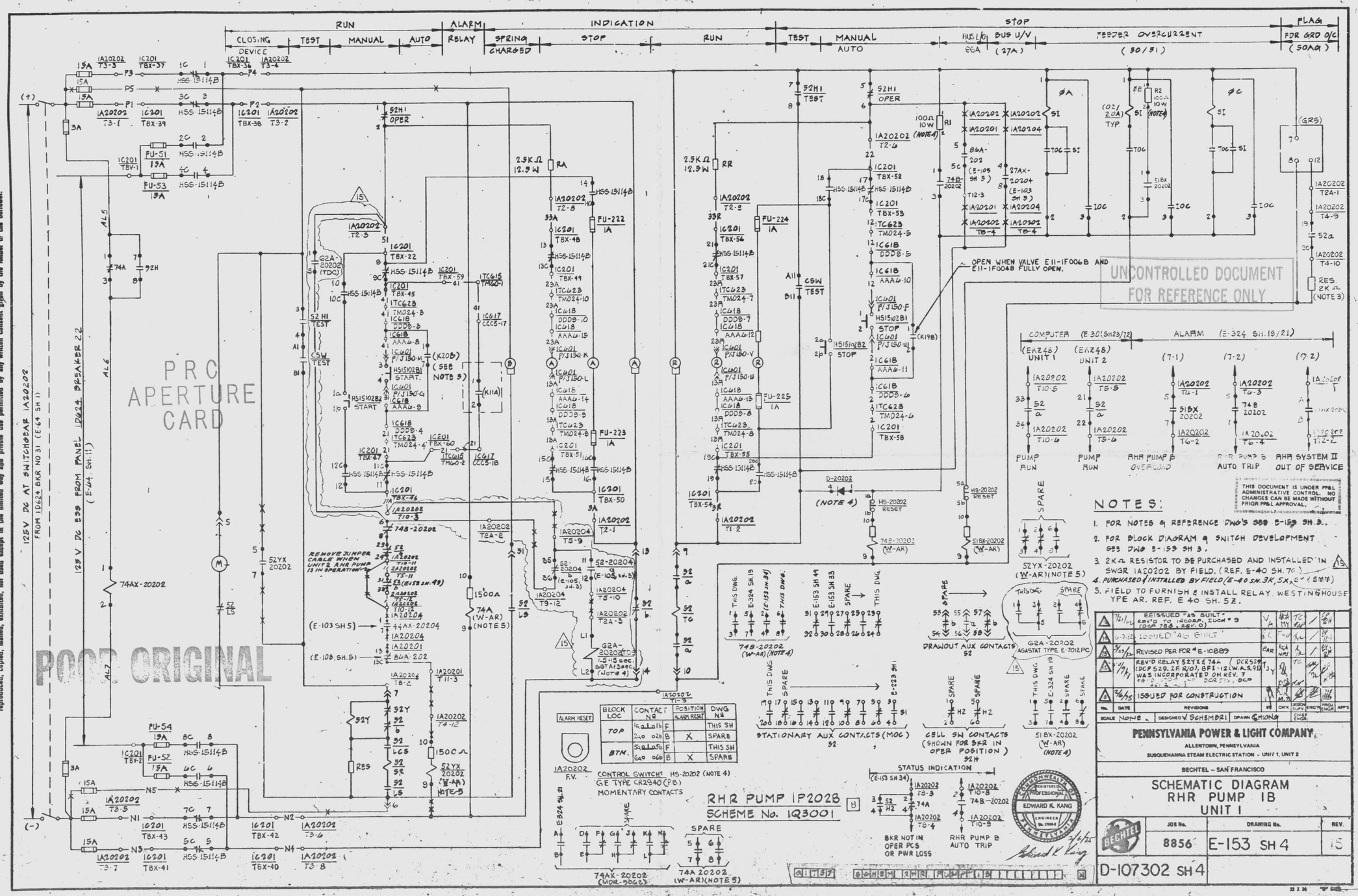
RUN
CLOSING DEVICE
TEST
MANUAL
AUTO
ALARM RELAY
INDICATION
SPRING CHARGED
STOP
RUN
TEST
MANUAL
AUTO
STOP
BUS U/V
FEEDER OVERCURRENT
(50/51)
FLAG
FDR GRD O/C
(50A/G)
125V DC AT SWITCHGEAR 1A20202
FROM 1D624 BKR NO 31 (E-64 SH 1)
125 V DC ESS FROM PANEL 1D624 BREAKER 22
(E-64, SH.11)
PRC APERTURE CARD
POOR ORIGINAL
UNCONTROLLED DOCUMENT FOR REFERENCE ONLY
OPEN WHEN VALVE E11-1F006B AND E11-1F004B FULLY OPEN.
REMOVE JUMPER CABLE WHEN UNIT 2 RHR PUMP IS IN OPERATION
RHR PUMP 1P202B
SCHEME No. 1Q3001
STATIONARY AUX CONTACTS (MOC) 52
CELL SW CONTACTS (SHOWN FOR BKR IN OPER POSITION) 52H
51BX-20202 (W-AR) (NOTE 4)
DRAWOUT AUX CONTACTS 52
STATUS INDICATION
BKR NOT IN OPER PCS OR PWR LOSS
RHR PUMP B AUTO TRIP
COMPUTER (E 301 SH23/72)
ALARM (E-324 SH.18/21)
PUMP RUN
AHR PUMP B OVERLOAD
AHR SYSTEM II OUT OF SERVICE
SPARE
THIS DOCUMENT IS UNDER PP&L ADMINISTRATIVE CONTROL. NO CHANGES CAN BE MADE WITHOUT PRIOR PP&L APPROVAL.
NOTES:
1. FOR NOTES & REFERENCE DWG'S SEE E-153 SH. 3.
2. FOR BLOCK DIAGRAM & SWITCH DEVELOPMENT SEE DWG E-153 SH 3.
3. 2KΩ RESISTOR TO BE PURCHASED AND INSTALLED IN SWGR 1A20202 BY FIELD. (REF. E-40 SH. 7C)
4. PURCHASED & INSTALLED BY FIELD (E-40 SH. 3K, 5X, 8Y & 5MM)
5. FIELD TO FURNISH & INSTALL RELAY WESTINGHOUSE TYPE AR. REF. E 40 SH. 5Z.
REISSUED "AS BUILT"
ISSUED "AS BUILT"
REVISED PER FCR # E-10889
REV'D RELAY 52YX & 74A
ISSUED FOR CONSTRUCTION
REVISIONS
SCALE NONE
DESIGNED V SCHEMBRI
DRAWN C HONG
PENNSYLVANIA POWER & LIGHT COMPANY
ALLENTOWN, PENNSYLVANIA
SUSQUEHANNA STEAM ELECTRIC STATION - UNIT 1, UNIT 2
BECHTEL - SAN FRANCISCO
SCHEMATIC DIAGRAM
RHR PUMP 1B
UNIT 1
JOB No. 8856
DRAWING No. E-153 SH 4
REV. 15
D-107302 SH 4
EDWARD K. KANG
24 X
I certify that the microfilmed image contained on this microform were made in the normal and regular course of business. This is a true, full, correct and complete reproduction and replacement for and/or in lieu of original documents generated by the Bechtel group of companies.
DANNY
7-21-82
MRG 1
Docket # 50-387
Control # 8303090234 — 74
Date 3/1/83 of Document:
REGULATORY DOCKET FILE