REGULATORY INFORMATION DISTRIBUTION SYSTEM (RIDS)

ACCESSION NBR:8103090615 DOC.DATE: 81/03/03 NOTARIZED: NO DOCKET #
FACIL:50-387 Susquehanna Steam Electric Station, Unit 1, Pennsylva 05000387
50-388 Susquehanna Steam Electric Station, Unit 2, Pennsylva 05000388
AUTH.NAME AUTHOR AFFILIATION
CURTIS,N.W. Pennsylvania Power & Light Co.
RECIP.NAME RECIPIENT AFFILIATION
YOUNGBLOOD,B.J. Licensing Branch 1

SUBJECT: Forwards info re Category I masonry walls employed by plants under CP & OL review, in response to NRC 800420 request. Original reply was encl in 800908 ltr.

DISTRIBUTION CODE: B001S COPIES RECEIVED:LTR 1 ENCL 1 SIZE: 18
TITLE: PSAR/FSAR AMDTS and Related Correspondence

NOTES:Send I&E 3 copies FSAR & all amends. 05000387
Send I&E 3 copies FSAR & all amends. 05000388

	RECIPIENT ID CODE/NAME		COPIES LTTR	COPIES ENCL	RECIPIENT ID CODE/NAME		COPIES LTTR	COPIES ENCL
ACTION:	A/D LICENSNG		1	0	YOUNGBLOOD,B		1	0
	RUSHBROOK,M.		1	0	STARK,R.	04	1	1
INTERNAL:	ACCID EVAL BR	26	1	1	AUX SYS BR	07	1	1
	CHEM ENG BR	08	1	1	CONT SYS BR	09	1	1
	CORE PERF BR	10	1	1	EFF TR SYS BR	12	1	1
	EMERG PREP	22	1	0	EQUIP QUAL BR	13	3	3
	GEOSCIENCES	14	1	1	HUM FACT ENG BR		1	1
	HYD/GEO BR	15	2	2	I&C SYS BR	16	1	1
	I&E	06	3	3	LIC GUID BR		1	1
	LIC QUAL BR		1	1	MATL ENG BR	17	1	1
	MECH ENG BR	18	1	1	MPA		1	0
	NRC PDR	02	1	1	OELD		1	0
	OP LIC BR		1	1	POWER SYS BR	19	1	1
	PROC/TST REV	20	1	1	QA BR	21	1	1
	RAD ASSESS BR	22	1	1	REAC SYS BR	23	1	1
	REG FILE	01	1	1	SIT ANAL BR	24	1	1
	STRUCT ENG BR	25	1	1	SYS INTERAC BR		1	1
EXTERNAL:	ACRS	27	16	16	LPDR	03	1	1
	NSIC	05	1	1				

MAR 10 1981

MA 4

TOTAL NUMBER OF COPIES REQUIRED: LTTR 57 ENCL 51

JF

PP&L

TWO NORTH NINTH STREET, ALLENTOWN, PA. 18101 PHONE: (215) 821-5151

MAR 03 1981

Mr. B. J. Youngblood, Chief
Licensing Branch No. 1
Division of Licensing
Nuclear Regulatory Commission
Washington, D.C. 20555

SUSQUEHANNA STEAM ELECTRIC STATION
NRC INFORMATION REQUEST:
CATEGORY I MASONRY WALLS
ER 100450 FILE 841-2
PLA-628

Dear Mr. Youngblood:

This is a follow-up reply to Mr. S. A. Varga's letter dated April 21, 1980 requesting information on Category I Masonry Walls employed by plants under construction permit and operating license review. Our original reply to you on this subject was by our letter (PLA-523) of September 8, 1980.

Enclosed are the numerical examples for block wall design and a design example employed for Category I pipe supports/hangers on block walls. This completes our reply to Question #5 of the Information Request and, therefore, all questions have hereby been completely answered.

We trust these responses satisfactorily answer any concerns you may have pertaining to the design adequacy of the Category I Masonry Walls employed at the Susquehanna Steam Electric Station. However, should any questions arise, please do not hesitate to contact us.

Very truly yours,

NW Curtis

Norman W. Curtis
Vice President - Engineering and Construction, Nuclear

DRR:saw

Enclosure

Response required: No

B001
S
1/1

DESIGN EXAMPLE FOR CATEGORY I BLOCK-WALLS

1. Reference Documents:

1.1 Applicable section of FSAR

3.7b Seismic Design

3.8 Design of Category I Structures

3.8.c Concrete Unit Masonry, Masonry Materials and Quality Control

1.2 Uniform Building Code (1976) Section 24

1.3 Building code requirements for Reinforced Concrete (ACI-318-71)

1.4 Building code requirements for Concrete Masonry Structures (ACI-531-79)

1.5 Project Specifications 8856-C-72 Expansion Anchors

8856-A-2 Concrete Unit Masonry

8856-G-24 Floor Response Spectra

1.6 Design Drawing 8856-C-807

1.7 J.E. Amrhein: Reinforced Masonry Engineering Handbook - 3rd Edition. Published by Masonry Institute of America 1978.

1.8 Roark: Formulas for Stress & Strain - 5th Edition.

2. Materials:

2.1 Concrete hollow blocks H or A shaped with ultimate compressive strength f'_m = 1500 psi and mortar with f'_c = 2500 psi.

2.2 Cells are filled with concrete grout with f'_c = 2500 psi.

2.3 Concrete fill for core of double wythe walls, f'_c = 2500 psi.

2.4 Reinforcing steel grade 60, f_y = 60 ksi.

3. Wall Geometry:

Wall Thickness: 8"

Span: 10.88 ft.

End Conditions: Hinged at top and bottom - Local and Global Analysis
Fixed bottom and free top - Story Drift and In-plane Loading

Attachment: 100 lbs. of vertical load applied at 8 inches from the face of wall.

Reinforcement: #6 @ 16" vertical
#4 @ 24" horizontal.

4. Symbols and Notations:

A = Gross Section Area (in^2)

A_s = Tension Steel Area (in^2)

A' = Compression Steel Area (in^2)

b = Width of Member (in.)

c = Distance of the neutral axis of the cracked section from the extreme compression fibers (in.)

d = Distance between extreme compression fibers and centroid of tension reinforcement (in.)

d' = Distance between extreme compression fibers and centroid of compression reinforcement (in.)

E_v = Modulus of rigidity (psi)

f_m = Stress in masonry (psi)

f_n = Lowest natural frequency of the wall (Hz)

$F = bd^2/12000$ dimensional coefficient used in determination of resisting moment of masonry sections

g = Acceleration due to gravity, 386.4 in/sec^2

I_{cr} = Moment of inertia of the cracked section (in^4)

I_e = Equivalent moment of inertia (in^4)

I_g = Moment of inertia of gross section (in^4)

$j = 1 - k/3$

K = Numerical coefficient depending on structural lateral force resisting system

$k = c/d$

Y = Story drift or displacement of wall (in.)

D_s = Force corresponding to displacement Y (lbs.)

M_L = Local bending moment (in-lb)

M_a = Global bending moment (in-lb)

$n = E_s/E_m$ = Ratio of Young's modulus of reinforcing steel to Young's modulus of masonry

P_a = Attachment inertia load

t = Thickness of blockwall inches

$\rho = As/bd$

$\rho' = A's/bd$

γ = Unit weight (lbs/cuft)

v = Shearing stress (psi)

V = Total lateral load or shear at the base (lbs.)

w = Weight per linear foot of wall

W = Total wt. of wall

5. Frequency Calculation:

5.1 Frequency of cracked section.

5.1.1 Moment of inertia of cracked section:

Refer to ACI-318-71 Handbook p. 390

$$c/d = \sqrt{(n\rho + [n-1]\ \rho')^2 + 2\ (n\rho + [n-1]\ \rho'\ d'/d)} - (n\rho + [n-1]\ \rho')$$

And

$$I_{cr} = \frac{bd^3(c/d)^3}{3} + \rho nbd\ (d-c)^2 + (n-1)\rho'\ bd\ (c-d')^2$$

in our case:

b = 12 inches

$A_s = .331\ in^2$

n = 20

$\rho = As/bd = .331/12x3.75 = .0074$

$n\rho = .1471$

$A'_s = 0$ (since $d' = \rho' = 0$)

$k = c/d = \sqrt{(.1471)^2 + 2\ (.1471)} - .1471 = .415$

$c = kd = .415x3.75 = 1.56$ in

$I_{cr} = (.415)^3/3 \times 12 \times 3.75^3 + .1471 \times 12 \times 3.75\ (3.75 - 1.56)^2$

$I_{cr} = 46.94\ in^4$

5.1.2 Deflection (simple beam)

weight of wall:

$w = \gamma x\ b \times t = 125 \times 7.63/12 \times 1 = 79.48$ lbs/ft

Static deflection

$$\Delta\ static = \frac{5wl^4}{384 \times E_m I_{cr}}$$

$$\Delta\ static = \frac{5 \times 79.48 \times 10.88^4 \times 12^3}{384 \times 1500000 \times 46.94} = .35589\ in$$

5.1.3 Frequency

$$f_n = \frac{1}{2\pi}\sqrt{g/\Delta \text{ static}}$$

$$f_n = \frac{1}{2\pi}\sqrt{386.4/.35589} = 5.24 \text{ Hz}$$

$$1.15\, f_n = 6.03 \text{ Hz}$$

$$.85\, f_n = 4.46 \text{ Hz}$$

6. Response Summary:

For acceleration refer to Project Specification 8856-G-24 or FSAR Section 3.7b.

HORIZONTAL RESPONSE						PEAK VERT. RESP.	
TYPE	FREQ. For Max Acc	DAMP.	ACCEL. ft/sec^2	FIG.	Direction	ACCEL. ft/sec^2	FIG.
OBE	4.5	4%	1.25 g	BN9-1		.60 g	BV10-1
SSE	4.5	7%	.78 g	FN9-2		.63 g	FV10-2
SRV	4.5	4%	.03 g	BN9-3	N/S	.72 g	BV10-3
LOCA	4.5	7%	negl.	FN9-4		.40 g	FV10-4
OBE	4.5	4%	1.40 g	BE10-1			
SSE	4.5	7%	1.13 g	FE10-2	E/W		
SRV	4.5	4%	.03 g	BE10-3			
LOCA	4.5	7%	negl.	FE10-4			

7. Local Analysis:

For load of attachment (see dwg. C-807)

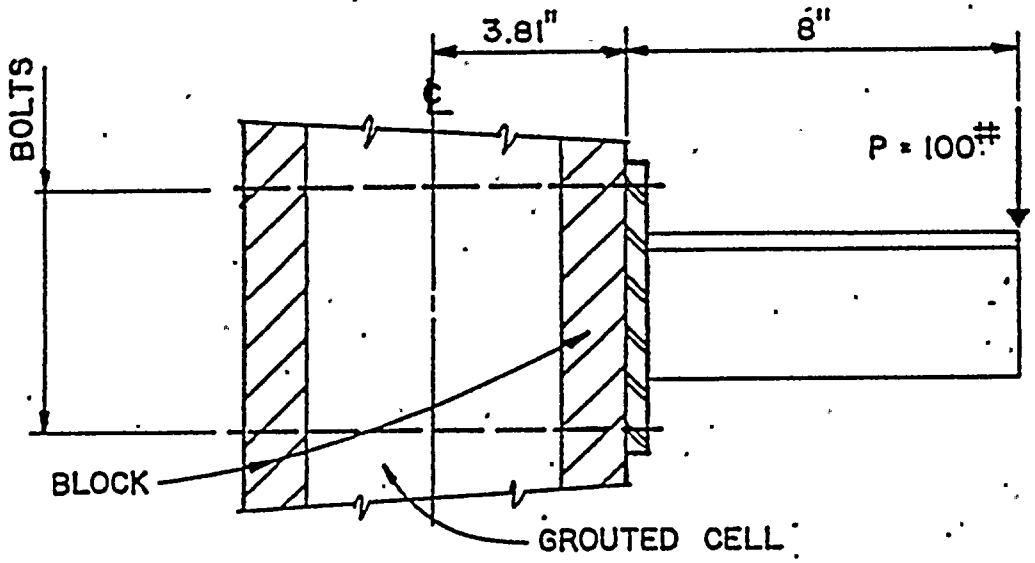

7.1 Normal load combination: $D + \overset{o}{L} + \overset{o}{T_o} + \overset{o}{R_o}$

For load combinations see FSAR table 3-8.8 or 3-8.9 respectively.

$I_g = t^3 = 7.625^3 \times 1 = 443.32 \text{ in}^4$

$M_a = 100 \times (8 + 3.81) = 1181 \text{ lbs in}$

$G = \frac{Mc}{I_g} = \frac{1181 \times 3.81}{443.32} = 10.5 \text{ psi} < 25 \text{ psi}$ O.K. See reference 1.2 Table 24-B

7.2 Vertical Response (Normal/Severe)

Load combination: $D + \overset{o}{L} + \overset{o}{R_o} + \overset{o}{T_o} + E + SRV + \overset{o}{P_s}$ See Section 'C' of FSAR Table 3.8-8

Amplified acceleration = $1.5\ a_v$

$(1.5)\ (E+SRV) = (1.5)\ (.60 + .72) = 1.98\ g$

$M_L = (1.98 + 1)\ (100)\ (11.81) = 3519.4 \text{ lb.in} = 293.3 \text{ lb.ft}$

Assume the following: (refer to project standard drawings C-805/ sh. 1, 2 & 3 and drawing C-807)

1. Min. of 2 anchors are used
2. Min. Spacing = 6" for anchors

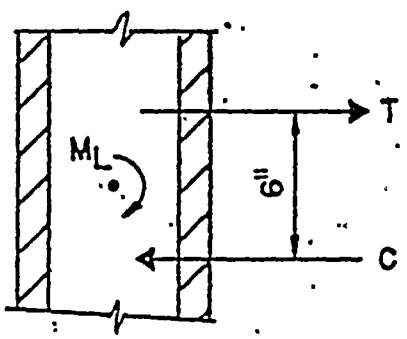

$T = C = (3519.4/6) = 586.6 \text{ lbs.}$

$\rho = .0074$

Then from reference 1.7 Table E-15

$j = .861 \quad b = 12" \quad d = 3.75"$

$v = (V/jdb) = (586.6)/(12)(.861)(3.75)$

$= 15.30 \text{ psi} < 25 \times 1.33 \text{ psi}$ O.K. Ref. 1.2 Table 24-B

Where:

T = The tensile force acting at the center line of bolts.

C = The compressive force at the centroid of the compressive block.

Check stress in rebars and in masonry: (Ref. 1.7 Table E-15)

$F = bd^2/12000 = (12)\ (3.75)^2/12000$

$= .0141$

$K = \frac{M}{F} = .2933/.0141 = 20.80$

Stress in masonry:

$f_m = 2K/jk = (2)(20.8)/(.861)(.415) = 116.4$ psi <500 psi Ref. 1.2

Stress in re-bars:

$f_s = M/A_s jd = 3519.4/.331x.861x3.75 = 3293.1$ psi <24000 psi x 1.33

For combination of horizontal and vertical response see global analysis.

8. Global Analysis: OBE Condition (normal/severe)

8.1 Vertical - loads due to attachment

$M_L = 293.3$ lbs.ft (see above - local analysis)

8.2 Horizontal $\not{D} + \not{L} + \not{H}_o + \not{T}_o$ + SRV + E

(E+SRV) = (1.4+.03) = 1.43g

w = (1.43)(79.48) = 113.66 lbs/ft (wall inertia load)

$P_a = (100)\ (1.43) = 143$ lbs (attachment inertia load)

8.3 Story Drift - for displacements refer to FSAR Fig. 3.7b-58, 59, 60 & 61

Y = (.001-.00078)(12) = .00264"

$D_s = 3E_m IY/L^3 = (3)\ (1500000)(46.94)(.00264)/(10.88x12)^3$

$= .25$ lb. ... negligible

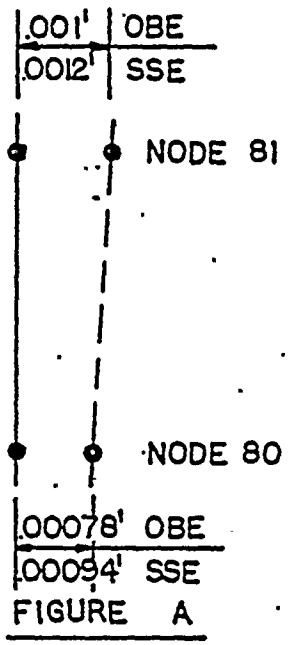

FIGURE A

8.4 Summation of above $\not{D} + \not{L} + \not{H}_o + \not{T}_o$ + SRV + E + D_s

$M = \frac{wL^2}{8} + PaL/4 + (M_L)(1/2) + (D_s)1/2$ for maximum bending analysis

$= \frac{(113.66)(10.88)^2}{8} + (143)(10.88)(1/4) + (293.3)(1/2) + (.25)(10.88)(1/2)$

$= 1681.8+388.96+146.65+1.36 = 2218.8$ lbs.ft

$R = \frac{wL}{2} + Pa + (M_L)(1/L) + D_s$ for maximum shear analysis

$= (113.66)(10.88)(1/2)+143+(293.3)(1/10.88) + .25$

$= 788.52$ lbs

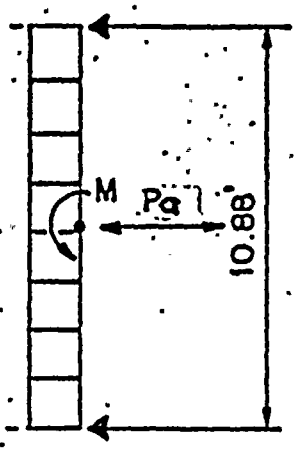

Stress in rebar:

$\rho = .0074$ $k=.415$ $j=.861$ $A_s = .331$ in^2

$f_2 = M/A_s jd = (2218.8)(12)/(.331)(.861)(3.75)$

$= 24914$ psi $<$ (24000)(1.33) O.K. (Ref. 1.2)

Stress in masonry: $K = M/F$

$F = bd^2/12000$

$F = 0.0141$

$K = (2.2188)/.0141 = 157.4$ M in [K ft]

$f_m = 2K/jk$

$= (2)(157.4)/(.861)(.415) = 876.8$ psi $>$ 500x1.33 = 665 psi N.G. (Ref. 1.1)

Since the stress in wall has exceeded the allowable stress, a redesign of wall with reduced span is required.

However, since the purpose of this example is to demonstrate the design procedure, such redesign is not provided.

Shear at N.A.

$v = \frac{V}{jbd} = (788.52)/(12)(.861)(3.75)$

= 20.35 psi $<$ 50 x 1.33 psi O.K. (Ref. 1.1)

8.5 Check of partial cracking in accordance with ACI-318 (Refer to FSAR 3.7b:3.1.5)

Deflection (OBE)

$I_{cr} = 46.94 \text{ in}^4$

$\Delta = \Delta_o + \Delta_F + \Delta_{mL}$

$\Delta_o = \frac{5w_o L^4}{384E_m I} = \frac{(5)(113.66)(10.88)^4(12)^3}{(384)(1500000)(46.94)} = .509 \text{ in}$

$\Delta_F = (FL^3/48E_m I) = (143)(10.88\text{x}12)^3/(48\text{x}1500000\text{x}46.94) = .0942 \text{ in}$

$\Delta_{mL} = (M_L L^2/E_m I)(.0642)$

$= (3519.4)(10.88\text{x}12)^2/(1500000\text{x}46.94)\text{x}.0642 = .0547 \text{ in}$

$\Delta = .509+.0942+.0547 = .6579 \text{ in}$

$I_e = (M_{cr}/M_a)^3 I_g + [1-(M_{cr}/M_a)^3] I_{cr}$

$M_{cr} = 2f_r I_g/t = (50)(443.32)/3.81 = 5817.8 \text{ lbs.in}$

$M_a = (2218.8)(12) = 26,625.6 \text{ lbs. in}$

$I_e = \frac{(5817.8)^3}{(26,625.6)^3}(443.32) + 1-\frac{(5817.8)^3}{(26,625.6)^3}(46.94)$

$= 4.62 + 46.45$

$= 51.07 \text{ in}^4$

Since $I_e \approx I_{cr}$ partial cracking need not be checked.

Revised

$\Delta = (.6579)(46.94)/51.07$

$\Delta = .6047 \text{ in}$

9.0 Global Analysis - SSE Condition (abnormal/extreme)

9.1 Vertical - Loads due to attachment.

Abnormal/Extreme: $D + L + (T_o + T) + R + P + H + [illegible] + P_s + SRV + LOCA$

$D + 1.5\,(E' + SRV + LOCA) = 1+1.5(.63+.50+.4)g$ (See Fig. FV10-3 of Ref. 1.5 for Value of SRV accl. under SSE condition)

$M'_L = (3.3)(100)(11.81)/12 = 324.8$ lb.ft.
$= 3897.3$ lb.in.

$T' = C' = 3897$ lb.in./6 in. $= 649.5$ lbs.

$v' = V'/bjd = 649.5/(12)(.861)(3.75)$

$= 16.76$ psi $< (25)(1.67) = 41.74$ psi

Ref. 1.1 Table 3.8-8, 3.8-9

The attachment load will be transferred to the wall by shear.

Stress in rebar - (Due to attachment only)

$f_s = M'_L/A_s jd = (3885.5/.33x.861x3.75)$

$= 3657.76$ psi $< (60,000)(.9) = 54,000$ psi Ref. 1.1 Table 3.8-8, 3.8-9

Stress in masonry - (due to attachment only)

$K = M/F = .3238/.0141 = 22.965$ $M = K\text{-}FT$

$f_m = 2K/jk = (2)(22.96)/(.861)(.415)$
$= 128.94 < 500 \times 1.67 = 835$ psi

9.2 Horizontal $D + L + H^* + T^* + SRV + 1.25E_o + LOCA$

$(1.25\,E_o + SRV + LOCA) = (1.25x1.4+.03+0)g = 1.78_g$

$w' = (79.48)(1.78) = 141.47$ lbs/ft

$F' = (100)(1.78) = 178$ lbs

9.3 Story Drift (see Fig. A Pg. 6)

$Y' = (.0012-.00094)(12) = .00312"$

$D'_s = (3E_m IY')/(L)^3 = (3)(1500000)(46.94)(.00312)/(10.88x12)^3$

$= .296$ lbs

9.4 Summation of above. $D + L + H^* + T^* + SRV + 1.25\,E_o + LOCA + D'_s$

$M' = w'L^2/8 + F'L/4 + (M'_L)(1/2) + (D'_s)(1/2)$

$= (141.47)(10.88)^2/8 + (178)(10.88/4) + 323.5/2 + (.296)(10.88)(1/2)$

$= 2741$ lbs.ft

$R' = (w'L/2) + F' + M'_L/L + D'_s = (141.47)(10.88)(1/2) + 178 + \frac{323.8}{10.88} + .29$

$= 769.6 + 178 + 29.76 + .29$

$= 977.65$ lbs

$v' = (978)/(12x.861x3.75) = 25.24$ psi < 45 psi

Stress in rebar:

$\rho = .0074 \quad k = .415 \quad j = .861 \quad A_s = .331$

$f_s = (M/A_s\, jd) = (2741.8x12/.331x.861x3.75)$

$= 30,777$ psi < 54000 psi O.K.

Stress in masonry:

$K = M/F = 2741/.0141 = 194.39$

$f_m = 2K/jk = (2)(194.39)/(.415)(.861)$

$= 1082.88$ psi $> 500 \times 1.67$ (see Ref. 1.1)

9.5 Check for partial cracking in accordance with ACI-318 (Refer to FSAR 3.7b.3.1.5)

Deflection (SSE)

$I_{cr} = 46.94$ in^4

$\Delta = \Delta' + \Delta_{F'} + \Delta_{ML'}$

$\Delta' = .509(141.47/113.66) = .634$ in. See page 8 for OBE deflection.

$\Delta_{F'} = (.0942)(178/143) = .117$ in. See page 8 for OBE deflection.

$\Delta_{M'L} = .0547$ in.

$\Delta = .634 + .117 + .0547 = .8057$ in.

$I'_e = (M_{cr}/M'_a)^3 I_g + (1 - M_{cr}/M'_a)^3 I_{cr}$

$= \left[\frac{2218.8}{32892}\right]^3 (443.32) + \left[1 - \frac{(2218.8)^3}{(32892)^3}\right] 46.94$

$= 47.06$ in$^4 \approx 46.94$ in^4

No further checking for partial cracking is required.

10. In Plane Loading:

Reference: Section-B dwg. C-1305

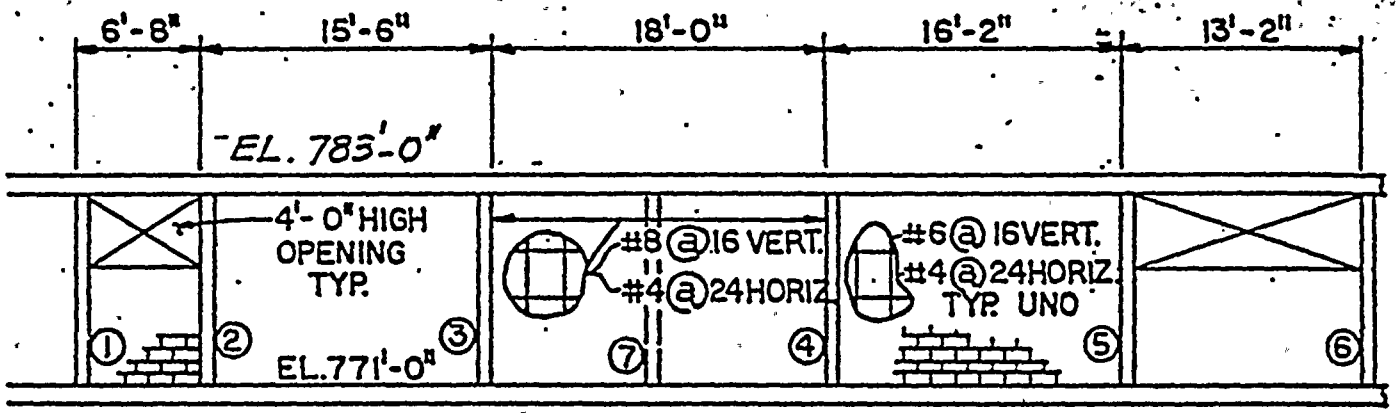

$L = (6.67 + 15.5 + 18 + 16.17 + 13.17) = 69.51'$

Assume the following:

1. Reinforcement #6 @ 16 vert. (conservative)
2. Perpendicular walls contribute to loading but not to stiffness of wall in in-plane direction
3. Deflection is less than 1 1/2" and therefore ceiling structural steel beams do not support the wall (See drawing C-805 for gap details)

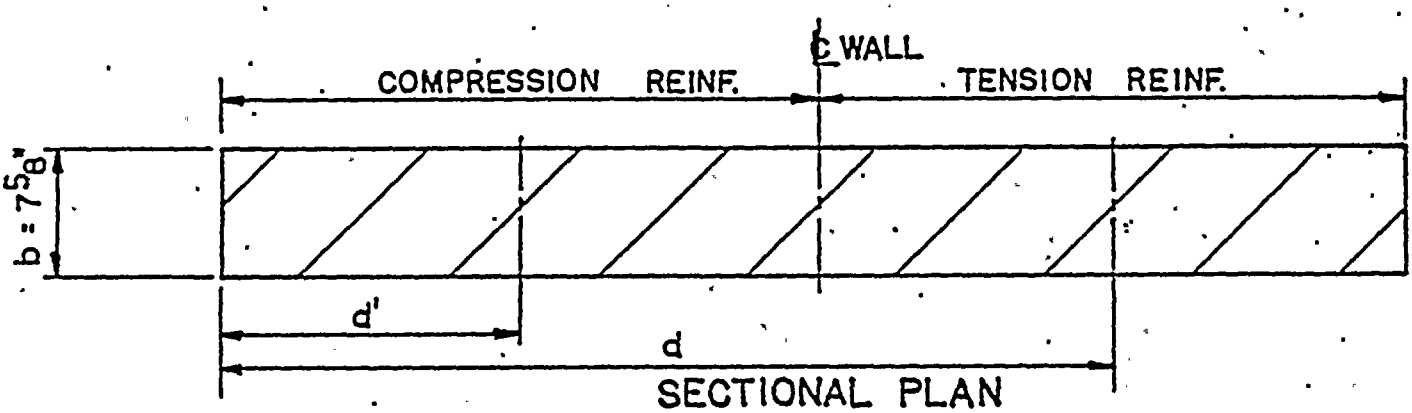

$d = (3/4)(L) = (3/4)(69.51)(12) = 625.59$ in

$d' = (1/4)(L) = (1/4)(69.51)(12) = 208.53$ in

$A_s = A'_s = (27 \text{ bars})(.44) = 11.88 \text{ in}^2$

$\rho = A_s/bd = 11.88/(7.625)(625.6) = .0025$

$d'/d = .333$ $\rho' = A'_s/bd = 11.88/(7.625)(625.5) = .0025$

$(n\rho) = (20)(.0025) = .050$

$(n-1)\ \rho' = (19)(.0025) = .0475$

$$c/d = \sqrt{[n\rho + (n-1)\ \rho']^2 + 2[n\rho + (n-1)\ \rho'\ d'/d]} - [n\rho + (n-1)\ \rho']$$

$$= [(.05+.0475)^2 + 2(.05+.0475x.333)]^{1/2} - (.05+.0475)$$

$$= .2778$$

$$c = (.2778)(625.59) = 173.79 \text{ in}$$

$$I_{cr} = \frac{bd^3(c/d)^3}{3} + \rho n\ bd\ (d-c)^2 + (n-1)\rho'\ bd\ (c-d')^2$$

$$= \frac{1}{3}(7.625)(625.59)^3\ (.2778)^3 + .05\ (625.59)(7.625)x$$

$$(625.59-173.79)^2 + (.0475)(7.625)(625.59)(173.79 - 208.53)^2$$

$$= 13,340,887.18 + 48,648,655.75 + 273,453.12$$

$$= 62,298,996$$

Note: The above approach for selecting "d", "d'", tension reinforcement and compression reinforcement is approx. only. An iterative process would be required to locate actual "d" and reinforcement.

$$\Delta = \Delta_b + \Delta_v = \frac{wL^4}{8E_m I} + \frac{3WL}{5AE_v}$$ Ref. 1.8 page 185

$w = b \times \gamma \times L$

$w = (.6354)(125)(69.51) = 5520.9$ lbs.ft (openings included)

$W = wH$ - opening

$W = (5520.9)(10.88) - .6354\ (4x6.67+4x12.5+7x3.33)125$

$= 52,125.69$ lb

Load from Perpendicular Walls.

The loading from cross walls is added to the wall inertia. The magnitude of the load depends on spacing of seismic supports (clip angles) for the cross wall, stiffness and acceleration of that wall. In this example maximum spacing of clip angles is 4'-0" O.C.

Let U be the added load due to cross wall then:

$U_1 = U_2 = U_3 = U_4 = U_5 = U_6 = U_7$ where 1 to 7 represent cross walls

$U_1 = (L)(\gamma)(b)(a)$

a = acceleration, see page 5; use maximum value in lieu of calculating frequency for each wal

$U_1 = (2')(125\ pcf)(.635)(1.43) = 227$ lbs/ft of height

$W = [52126+(\sum_{i=1}^{7} Ui)] = 52126+(7)(227)(10.88) = 69414.3$ lb

$w = 5520.9+(7)(227) = 7109.9$ lbs/ft

$\Delta b = \frac{wL^4}{8E_m I} = \frac{(7109.9)(10.88)^4(12)^3}{(8)(1500000)(62,298,996)} = .00023$ in

$\Delta v = \frac{3WL}{(5)(AE_v)} = \frac{(3)(69414.3)(10.88x12)}{(5)(173.79x7.625)(600,000)} = .00684$ in

Δ static = .00023+.00684 = .00707 in

$f_n = 1/2\ (g/\Delta)^{1/2} = 1/2\ (386.4/.00707)^{1/2}$

$f_n = 37.21$ Hz

$.85\ f_n = 31.63$ Hz

$1.15\ f_n = 42.79$ Hz

Refer to Specification 8856-G-24 for the following:

RESPONSE SUMMARY

Horizontal Response						Peak Vert. Resp.	
Type	Freq.	Damp.	Accel.	Fig.		Accel.	Fig.
OBE	32	4%	.226	BN9-1			
SSE	32	7%	.287	FN9-2			
SRV	32	4%	.06	BN9-3	N/S		
LOCA	32	7%	.13	FN9-4			
OBE	32	4%	.218	BE10-1			
SSE	32	7%	.271	FE10-2			
SRV	32	4%	.05	BE10-3	E/W		
LOCA	32	7%	.13	FE10-4			

WALL EVALUATION

d = Distance to doorway (very conservative)

Loading Combination: (Normal/Severe) $D+L+T_o+H_o+E+SRV+D_s$

E+SRV = (.226+.06)= .29 g

$V = Wa+[a(100\ lb)(L/3)]+Ui$

$V = (.29)(52126)+(.29)(100x69.51/3)+(7x227)(10.88)$

= 15116.5+671.83+17288.3 = 33076.7 lbs

100 lb = attachment load per 3 ft. strip as shown on dwg. C-807

$v = V/bjd = 33076.7/(7.625)(.907)(29x12+4)$

= 13.58 psi < 43 psi O.K.

$$j = 1-\frac{k}{3}$$

$$= 1 - (c/d)/3$$

$$= 1 - \frac{.2778}{3} = .9074$$

Note: By inspection for abnormal/extreme Environmental load combination, in-plane shear is O.K.

AS-BUILT MINOR REVISION
FOR PROJECT REVIEW ONLY

ITEM NO	NO REQ'D	FIG. NO.	SIZE	DESCRIPTION	TW #	MAT'L
* 1	1	211	#1	Sway Strut Assy. 6 5/8" O.D. Pipe. W = 0'-11", Load = 152# /PH74, Rear Brkt Pin - A-193 Gr.37, Rod = SA-26, Pl=SA-36 (or SA-515Gr.65)		SA106GrB (pipe)
* 2	1	-	∠ 3X3X 5/8 X 1'-3" LG		9	SA 36
* 3	1	-	PL 5/8 X 11" X 11"	(OR SA-515-GR 65)		SA 36
4	4	140	5/8" X 1'-2" ROD W/ALL THREAD			SA-36
5	16	-	5/8" HEX NUT			SA307GrB
6	4	60	5/8" STL. WASHER PL			SA 36

STRESS ISO SK-M-1583-A

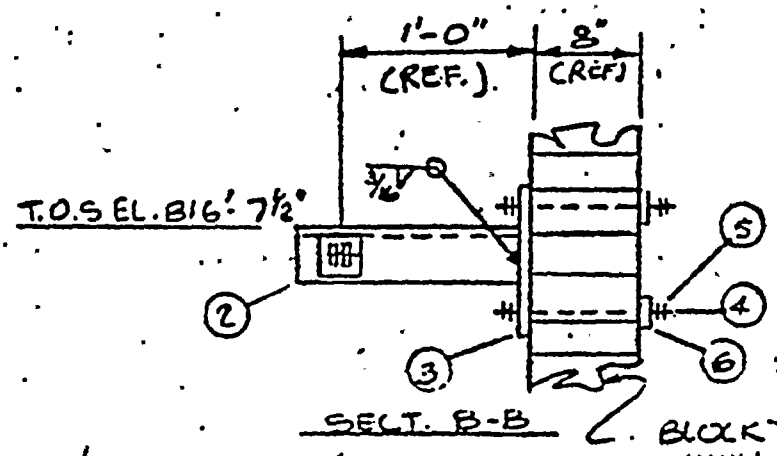

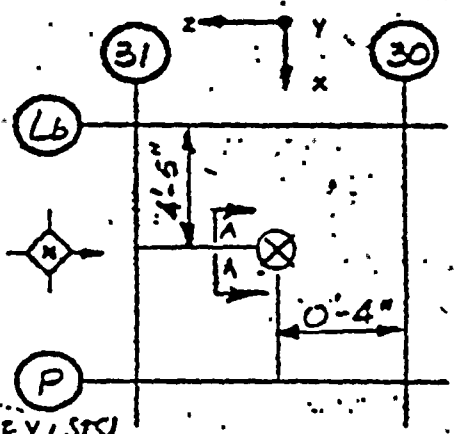

LOCATION PLAN
AREA 21

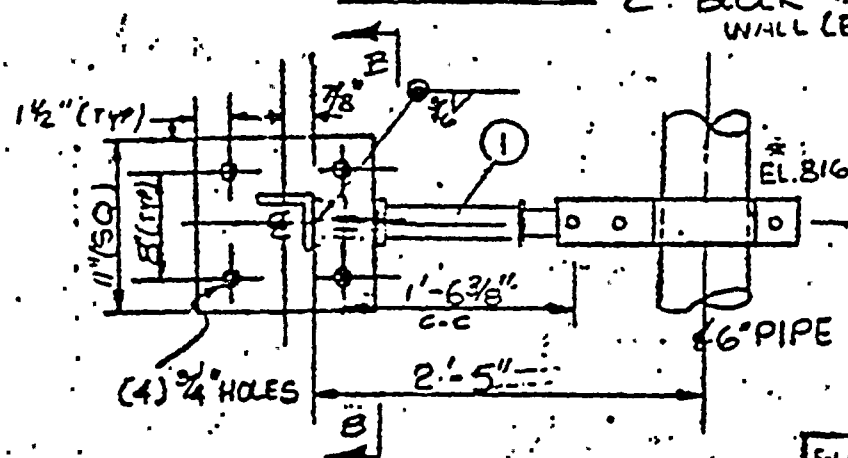

ELEVATION A-A

NOTES:
1. HANGER - CRITICAL
2. CODE B81.1
3. SEISMIC CATEGORY I
4. RAD. ZONE II

HANGER LOCATIONS AS NOTED ARE INSTALLATION GUIDE LINES ONLY. ACTUAL LOCATION USED FOR VERIFICATION SHALL BE AS NOTED ON AS-BUILT PIPING ISOMETRICS

F.LBS	THERMAL	WEIGHT	SEISMIC
F X	-2 #	0 #	± 150 #

MARK NO. HBD-3003-H4

REV	DATE	REVISIONS	BY	CH'K	DESD	SUPV	ENG	STRS	PROJ
0	5/3/77	ISSUED FOR CONSTRUCTION							

PENNSYLVANIA POWER & LIGHT COMPANY
ALLENTOWN, PENNSYLVANIA
SUSQUEHANNA STEAM ELECTRIC STATION
UNIT 1 & UNIT 2

SAN FRANCISCO

REF. DWGS.
ISO HBD-3003-1(7)
PIPE M-21-11-2
STEEL C-718-3

PIPE SUPPORT CENTRAL CONTROL BLDG
CHILLED WATER UNIT 1 & 2

JOB NO. 8856 | Q | DRAWING NO. SU 300 HBD-3003-H4 | REV. 0/F2

UNCONTROLLED COPY

WELDING REQUIREMENTS
P1-A-LH E-7018

ITEMS TO BE ... BY GRINNELL. ALL ... WILL BE ORDERED IN BULK QUANTITIES FROM

CALCULATION SHEET

CALC. NO. M-1583C REV. NO. 0

ORIGINATOR PING Y. TANG DATE 2-19-81 CHECKED E. JILWAN DATE 2-20-81

PROJECT SSES JOB NO. 8856

SUBJECT HBD-3003-H4 SHEET NO. 1/1

(1) Design Load (Normal):

$P = F_x = -152^{\#}$ OR $P = 150^{\#}$

$M = 12 \times 152 = 1824^{4\#}$

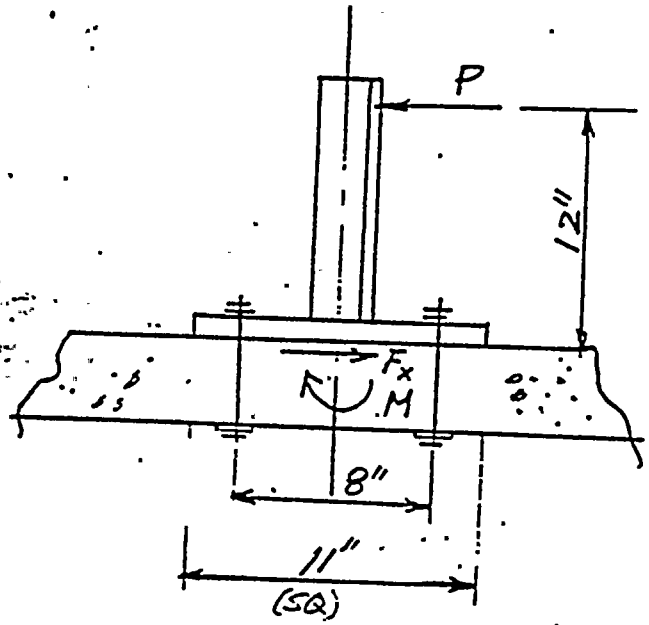

(2) Bearing stress:

$F = \frac{1}{2} \times 5.5 \times 11\, \sigma_m = 30.25\, \sigma_m \quad \cdots (i)$

$M = 2 \times F \times \frac{2}{3} \times 5.5 = 7.33\, F \quad \cdots (ii)$

$\because M = 1824$

From (ii), $F = 1824/7.33 = 248.73$

Sub. into (i)

$\sigma_m = \frac{248.73}{30.25} = 8.22^{PSI}$

< 300 PSI O.K.

(Allowable stress on Block wall)

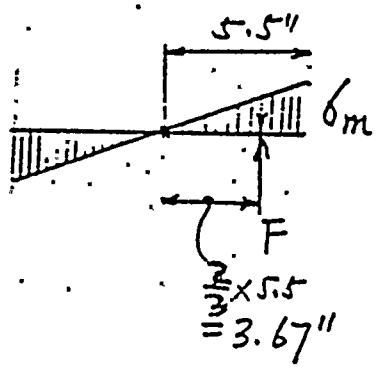

(3) Bolts (Tension & Shear): $\frac{5}{8}$"ϕ : Gross Area $= 0.307^{IN^2}$

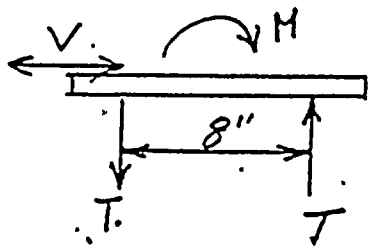

$T = \frac{1824}{8 \times 2} = 114^{\#}/\text{Bolt} = \frac{114}{.307}$

$= 371.33$ PSI

$V = \frac{152}{4} = 38^{\#}/\text{Bolt} = \frac{38}{.307} = 123.78^{PSI}$

$\therefore f_v = (\overline{114}^2 + \overline{38}^2)^{\frac{1}{2}} = 120.2^{\#} < 750^{\#}$

(Allowable Load For $\frac{5}{8}$"ϕ through bolt.)