TENNESSEE VALLEY AUTHORITY
BROWNS FERRY NUCLEAR PLANT

MECHANICAL MAINTENANCE INSTRUCTION 117

INSTALLED OVERHEAD TRAVELING BRIDGE CRANES-
INSPECTION, TESTING, AND PREVENTATIVE MAINTENANCE

UNITS 1, 2, AND 3

Approved _____
Plant Superintendent

Date March 3, 1981

8206140211 820603
PDR ADOCK 05000259
P PDR

CONTENTS

		Page
1.0	Scope	1
2.0	References	1
3.0	Prerequisites	1
4.0	Precautions	1
5.0	Preparation for Maintenance	2
6.0	Temporary Conditions	2
7.0	ALARA Considerations	2
8.0	Instructions	2
8.1	Inspection	3
8.2	Testing	5
8.3	Preventative Maintenance	6
9.0	Post Maintenance Testing	15
9.1	Load Test	15
9.2	Operability Test	15
10.0	Return to Service	15

DATA SHEETS

Data Sheet Number	Data Sheet Description	
Cover	Data Cover Sheet	16
1	Major Overhead Crane Frequent Inspection	18
2	Major and Minor Overhead Crane Periodic Inspection	20
3	Major and Minor Overhead Crane Major Safety Inspection	21
4	Major Overhead Crane Lift or Load Test Record	23

CONTENTS (Continued)

DATA SHEETS

Data Sheet Number	Data Sheet Description	
5	Minor Overhead Crane Load Test	24
6	Major and Minor Overhead Crane Preventative Maintenance	25

APPENDIX

Appendix Number	Appendix Description	
1	Major Overhead Frequent Inspection Checklist	29
2	Major and Minor Overhead Crane Periodic Inspection Checklist	31
3	Major and Minor Overhead Crane Major Safety Inspection Checklist	32
4	Load Testing	34
5	Lubricant Specifications	35
6	Rope Reeving	37
7	Break-in Procedure for New Wire Rope	41
8	Items From DPM N74M15 Which Electrical Maintenance Is Responsible For	42
9	Crane Hook Dimensions	43

TENNESSEE VALLEY AUTHORITY
BROWNS FERRY NUCLEAR PLANT

MECHANICAL MAINTENANCE INSTRUCTION 117

INSTALLED OVERHEAD TRAVELING BRIDGE CRANES-
INSPECTION, TESTING, AND PREVENTATIVE MAINTENANCE

1.0 Scope

This instruction contains inspection, testing, and preventative maintenance procedures to be used to help ensure personnel and equipment safety.

2.0 References

2.1 DPM N72S2, Section IV, Part M17, Safety and Hazard Control Manual, Cranes and Hoists.

2.2 DPM N74M15, Maintenance, Testing, and Inspection of Nuclear Plant Cranes.

2.3 ANSI N45.2.2, Packaging, Shipping, Receiving, Storage, and Handling of Items for Nuclear Power Plants.

2.4 Standard Practice BF 14.24, Cranes and Hoist Maintenance, Testing, and Inspection.

2.5 ANSI B30.2.0, Overhead and Gantry Cranes.

2.6 OSHA Regulation 1910.179, Overhead and Gantry Cranes.

2.7 Standard Practice BF 14.49, Operation of Cranes and Hoists.

3.0 Prerequisites

3.1 The shift engineer shall be notified and the necessary hold orders obtained.

3.2 Obtain a SWP if necessary.

3.3 All work areas shall be cleaned of grease and other foreign material.

3.4 Cranes and Hoists shall be operated in accordance with this instruction and reference 2.7.

4.0 Precautions

4.1 Do not position crane over areas where if anything were to fall from the

4.0 Precautions (Continued)

4.1 (Continued)

crane it would endanger personnel or equipment. Do not position Reactor Building Crane over the fuel or equipment pools. If the crane is positioned over an area that is a personnel walkway then signs must be posted on floor indicating that work overhead is being performed and that this area is a hard hat area.

4.2 On the refuel floor, position crane where personnel are out of line of sight with a reactor vessel if the reactor vessel's head is removed.

4.3 If an operator is assigned to assist with this instruction then he is not to leave the crane controls with workmen on the bridge or performing work on the crane.

5.0 Preparation for Maintenance

5.1 All controllers shall be in the off position.

5.2 The main or emergency switch shall be opened and tagged unless power controls are needed.

5.3 An Out of Order sign shall be placed on the crane access.

6.0 Temporary Conditions

Not Applicable

7.0 ALARA Considerations

7.1 Cranes should be positioned in a location to minimize radiation exposure to all personnel performing this instruction.

8.0 Instructions

This instruction contains three separate parts which are 1) Inspection, 2) Testing, and 3) Preventative Maintenance.

Each major crane operator (Reactor, Turbine, or Radwaste Building Crane) on

8.0 Instructions

each work shift that he operates the crane, must document the heaviest load that was lifted during his work shift by completing data sheet 4. This data sheet will be used to verify crane lifts and therefore possibly eliminate an annual load test. These data sheets are to be sent to the mechanical maintenance supervisor for filing and does. have to be accompanied by the data cover sheet for this instruction.

Appendix 8 contains parts of DPM N74M15 which electrical maintenance is responsible for.

8.1 Inspection

Installed overhead traveling bridge cranes are divided into two classes per Standard Practice BF 14.24. These classes are: Major Installed Cranes (Reactor, Turbine, and Radwaste Building Cranes) and Minor Installed Cranes (Cranes such as the maintenance shop crane).

Major installed cranes will have three different inspections performed on them. These inspections are:

1. Frequent
2. Periodic
3. Major safety Inspection

Minor installed cranes will have two different inspections performed on them. These inspections are:

1. Periodic
2. Major Safety Inspections

The description and frequency of these inspections are shown on the following pages.

8.0 Instructions (Continued)

8.1 Inspection (Continued)

8.1.1 Frequent Inspections - This inspection, performed by the crane operator, consists of a daily visual and operational inspection of each crane prior to use. Operators of the same crane on different shifts shall make their individual inspection. On days when the crane will not be used, no inspection is necessary. If only one hoist on multihoist cranes will be used, the inspection need only be performed for that hoist. A checklist form shall be made and the crane operator shall initial each applicable checkpoint prior to crane operation, attesting to the fact that each point has been checked and is satisfactory. Appendix 1 has the item checklist. The data sheet for this inspection is Form BF 88 in the Standard Practice (Shown as Data Sheet 1). Note that the data cover sheet need not be submitted with frequent inspection.

8.1.2 Periodic Inspection - This inspection consists of a more detailed inspection than the frequent inspection. Semiannually a periodic inspection will be made on each major and minor overhead crane. During each year one of these inspections will coincide with and be a part of a Major Safety Inspection, which will be described later. Appendix 2 has the item checklist. Data Sheet 2 for this inspection is included in this instruction.

8.1.3 Major Safety Inspection - Annually each major and minor overhead crane will be given a Major Safety Inspection. This inspection consists of checking the major safety-related devices and components on each overhead traveling bridge crane and shall include the items in Appendix 3 plus a complete periodic inspection. Data Sheet 3 for this inspection is included in this instruction.

8.0 Instructions (Continued)

8.2 Testing

8.2.1 Major Installed Cranes (Reactor, Turbine, and Radwaste Buildings' Cranes)

Load Test - A load test of 125 per cent of rated load shall be performed on each crane at the initial construction acceptance test (or preoperational test) and after a major modification or maintenance to load bearing members of the crane. (The crane may be rated at not more than 80 per cent of the test load imposed.)

A load test of 100 percent of rated load shall be performed on each crane after the replacement of the wire rope. This test should only be performed after proper break-in of the wire rope, as specified in Attachment A of DPM N74M15 (See Appendix 7)

Other load tests at regular intervals are not required as a record of major lifts constitutes periodic load tests. Major lifts are considered as lifts equal to 60 per cent or more of rated capacity.

Data sheet 4 will be used to document load test for major cranes.

8.2.2 Minor Installed Cranes (Cranes such as maintenance shop crane)

Load Test - A load test of 125 per cent of rated load will be performed annually.

A load test of 100 per cent of rated load shall be performed on each crane after the replacement of the wire rope. This test should only be performed after proper break-in of the wire rope, as

8.0 Instructions (Continued)

8.2 Testing

8.2.2 Minor Installed Cranes (Continued)

specified in Attachment A of DPM N74M15 (See Appendix 7). Data Sheet 5 will be used to document load test for minor crane.

8.3 Preventative Maintenance

These instructions are to be used in performing preventative maintenance activities on the installed overhead traveling bridge cranes. During the course of these activities if other items are discovered which require corrective maintenance then enter these items in the remarks section of the Data Sheet 6 and initiate trouble reports to repair these items. Some parts of this instruction are not applicable to all of these cranes. The data sheets which accompany these instructions will note the cranes that are not covered by a particular instruction and N/A is to be entered on data sheets for cranes not covered by a particular instruction. Appendix 5 identifies the types of lubricants to be used on various components.

NOTE: QC Holdpoints/Data Signoffs are applicable only to the Reactor Building crane. No QC verification required for grease added from grease gun.

8.3.1 Speed Reducers (Including drum gear and pinion sets)

8.3.1.1 Check gear case for leaks. Repleace seals and gaskets as needed to stop leaks.

8.3.1.2 Change lubricant in gear case.

QC HOLDPOINT: A QC Inspector is to verify that the correct type lubricant per Appendix 5 is added to speed reducers. This holdpoint is applicable only to the Reactor Building Crane.

8.0 Instructions (Continued)

8.3 Preventative Maintenance (Continued)

8.3.1 Speed Reducers (Continued)

8.3.1.2 (Continued)

Inspect magnetic plug for metallic particles on those cases which have magnetic plugs and notify mechanical maintenance engineering if particles are found. On drum gear and pinion sets classified as open gear sets (although they will have a cover over gears), reapply lubricant to gears with a brush, being sure to add back to gears an equal amount that was drained from case.

8.3.1.3 Pull off inspection cover and visually inspect gears for damage such as pitting of teeth, bent, broken or cracked teeth, scarring, and cold flowing of tooth metal. Notify mechanical maintenance engineering section if problems are found.

8.3.2 Shaft Couplings

8.3.2.1 Check coupling for evidence of lubricant leakage. Correct any problems found involving loss of lubricant and relubricate coupling.

8.3.2.2 Check fasteners for tightness. Retighten any loose fasteners.

8.3.3 Bridge and Trolley Wheels

8.3.3.1 Visually inspect wheels for damage such as chipped, cracked or broken wheel flange. Report any damage found to mechanical maintenance engineering section.

8.3.3.2 Lubricate wheel bearings. Note that some of these bearings have both a grease fitting and a pressure relief fitting.

8.0 Instructions (Continued)

8.3 Preventative Maintenance (Continued)

8.3.3 Bridge and Trolley Wheels (Continued)

8.3.3.2 For bearings with the pressure relief fitting add grease until the relief fitting starts to expell grease. On bearings with just grease fittings, add only 3 to 5 pumps of grease from a grease gun. Some of the wheel bearings are permanently lubricated and sealed and do not require lubricating.

8.3.3 Instructions for wheel diameter measurements will be given later.

8.0 Instructions (Continued)

8.3 Preventative Maintenance (Continued)

8.3.4 Bridge and Trolley Track Rails

8.3.4.1 Move bridge and trolley the full length of their respective track rails and observe for skewing of bridge and trolley. If skewing is found notify the mechanical maintenance engineering section.

8.3.4.2 Visually check to determine if track rails are even and parallel. Notify mechanical maintenance engineering section if problems are found.

8.3.4.3 Check track rail fasteners for tightness. Tighten as necessary.

8.3.5 Equalizer Cylinder

8.3.5.1 Visually inspect for signs of leakage. Repair leakage as necessary.

8.3.5.2 Check fluid level in reservoir.

QC HOLDPOINT: Applicable only to Reactor Building Crane. A QC inspector is to verify that the correct type oil per Appendix 5 is added to equalizer cylinder.

Add oil as needed. Oil type is STO-1.

8.3.5.3 Cylinder adjustment instructions to be added later.

8.0 Instructions (Continued)

8.3 Preventative Maintenance (Continued)

8.3.6 Wire Rope

8.3.6.1 Lubricate Hoist Ropes.

8.3.6.2 Check end connections (sockets, clips, and etc.) for looseness, rope damage and other signs of deterioration. Tighten loose connections if possible and notify the mechanical maintenance engineering section of problems.

8.3.6.3 Check for proper rope reeving. Notify the mechanical maintenance engineering section if problems are found. See Appendix 6 for proper hoist reeving.

8.3.7 Wire Rope Drum

8.3.7.1 Check wire rope drum anchor fasteners for tightness. Tighten as needed.

8.3.7.2 Check drum grooves for scars burrs, and wear which would accelerate rope wear. Remove surface defects and notify mechanical maintenance engineering section concerning questionable drum wear. See figure 1 for illustration of groove wear measuring.

FIGURE 1

DRUM GROOVE WEAR INSPECTION

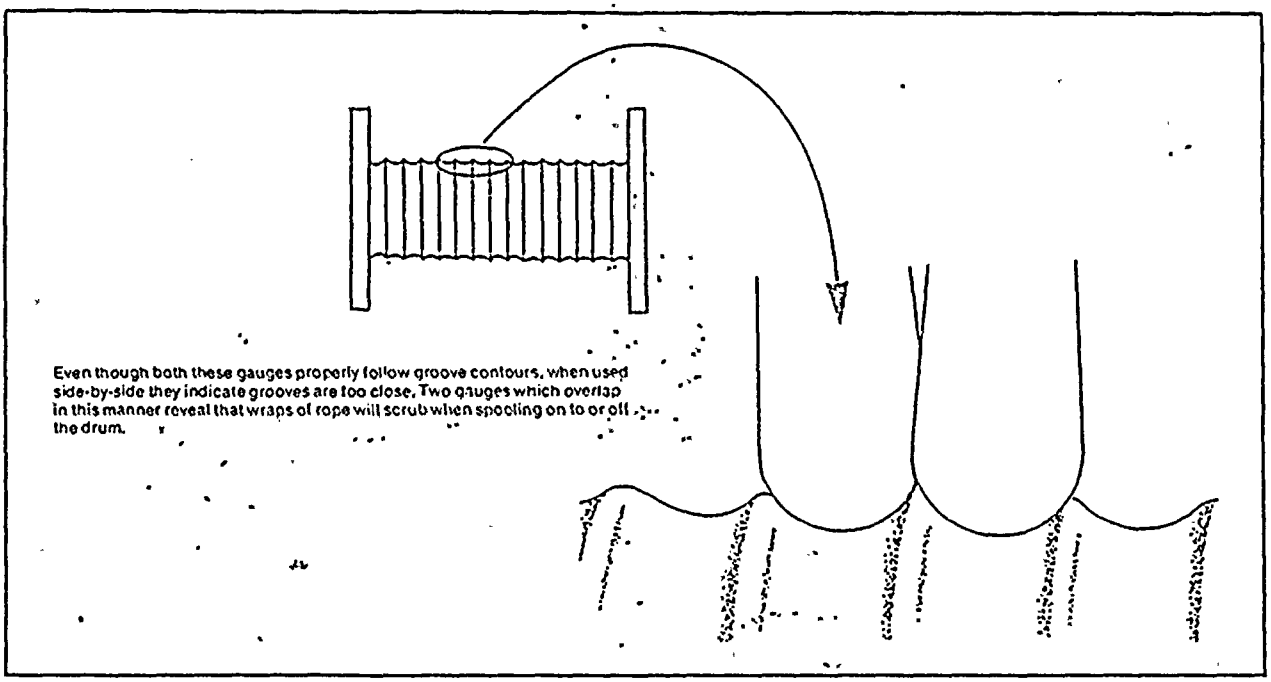

8.0 Instructions (Continued)

8.3 Preventative Maintenance (Continued)

8.3.8 Lower and Upper Blocks (Includes equalizer sheaves)

See Figure 2 for illustrations of inspections.

8.3.8.1 Visually inspect sheaves for damage such a nicks, cracks, broken or worn areas. Report any damage found to mechanical maintenance engineering section.

8.3.8.2 Check sheave groove wear with wear gauge. Report excessive wear to the mechanical maintenance engineering.

8.2.8.3 Check sheave bearings and hook bearing for wobble/looseness and ease of rotation. Report any problems found to the mechanical maintenance engineering section.

8.2.8.4 Lubricate sheave bearings and hook bearings.

8.3.9 Brakes

8.3.9.1 Check for hydraulic oil leaks on hydraulically operated brakes and repair as needed.

8.3.9.2 Check condition of hydraulic hoses. Replace hoses that are cracked or otherwise deteriorated.

8.3.9.3 Check hydraulic brake fluid level. Add automotive brake fluid as needed.

8.3.9.4 Check brake liners for wear. Replace liners when they are worn down to 1/8" thickness of remaining liner material.

8.3.9.5 Check brake hub for scoring. For minor surface scoring (scoring depth less than approximately 1/32"), resurface hub by machining. If heavy scoring (scoring depth greater than 1/32") is found notify the mechanical maintenance engineering section.

8.3.9.6 Brake adjustment instructions to be added later.

FIGURE 2

SHEAVE INSPECTION POINTS

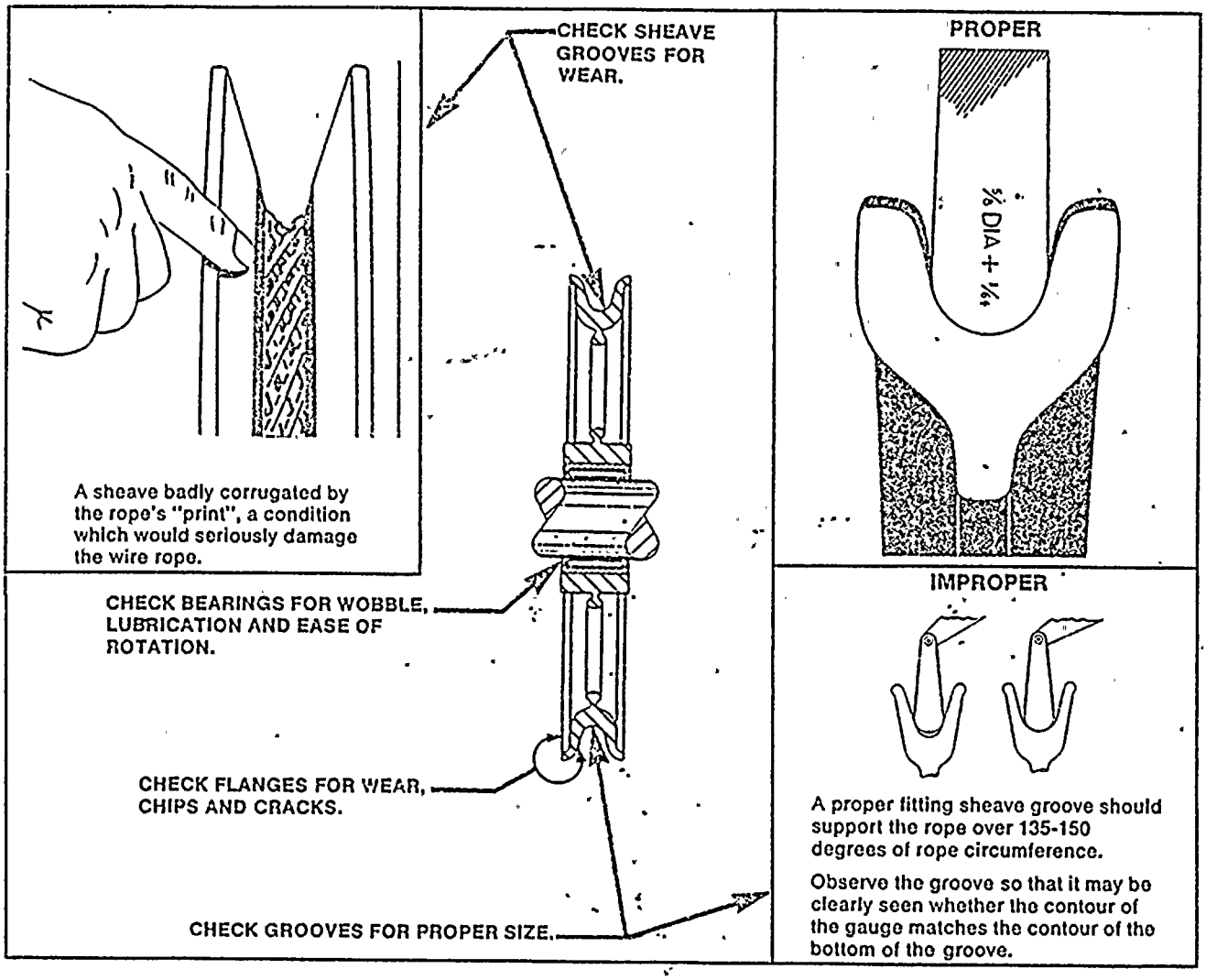

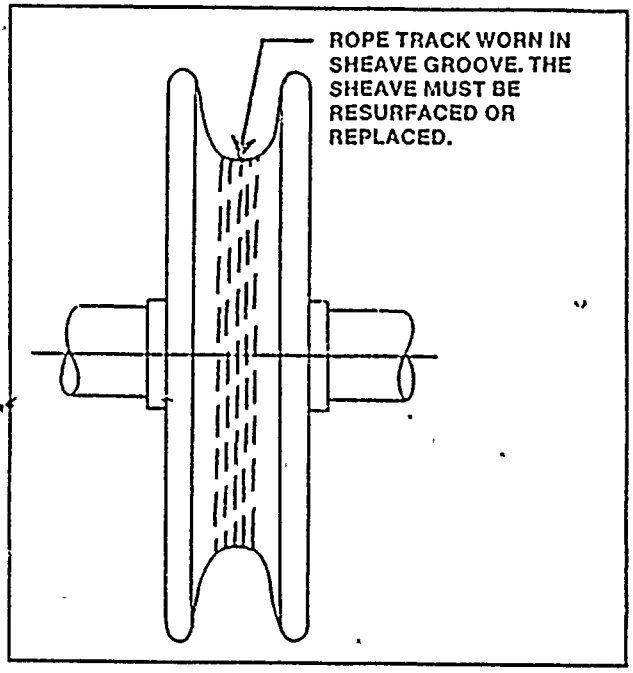

8.0 Instructions (Continued)

8.3 Preventative Maintenance (Continued)

8.3.10 Drip Pans

8.3.10.1 Check lubricant drip pans located under gear cases and shaft couplings for impending overflow. Clean pans as necessary.

8.3.11 Fasteners

8.3.11.1 Check fasteners (bolts, screws, and rivets) for tightness. Tighten or replace as needed. Components to be checked include; bearing housings, gear case mounts, motor mounts, bearing pedestal mounts, brake housing mounts, and bridge and trolley truck to girder connections.

9.0 Post Maintenance Testing

9.1 Load Test

A load test of 125 per cent rated load shall be performed on each crane after major maintenance on load bearing members of the crane. The scope of the maintenance activities outlined in this instruction are not considered major and normally would not be sufficient cause to perform a post maintenance load test. If, however, during the performance of this instruction, corrective maintenance is performed on load bearing members, the maintenance supervisor will determine if a post maintenance test is required. See Data Cover Sheet.

9.2 Operability Test

The maintenance activities outlined in this instruction are not of sufficient cause to perform an operability test. If, however, any corrective maintenance is performed as a result of this instruction, the maintenance supervisor will determine if an operability test is required. The scope of an operability test would normally be limited to testing the functions of the components that corrective maintenance was performed on. See Data Cover Sheet.

10.0 Return to Service

10.1 Ensure that work areas are clean. No loose objects are to be left on crane.

10.2 Release all hold orders on crane.

10.3 All signs which were posted are to be removed.

TENNESSEE VALLEY AUTHORITY
BROWNS FERRY NUCLEAR PLANT

INSTALLED OVERHEAD TRAVELING BRIDGE CRANES-
INSPECTION, TESTING, AND PREVENTATIVE MAINTENANCE

MECHANICAL MAINTENANCE INSTRUCTION 117

Data Cover Sheet

TR NUMBER_____ CRANE ID_____ DATE_____ UNIT_____

All work performed in accordance with instruction and quality assurance requirements were met. No cleanliness verification required as per BF 3.10.

Cognizant Engineer_____ Date_____

Maintenance Supervisor_____ Date_____

All applicable quality assurance requirements were met.

QA Supervisor_____ Date_____

REMARKS_____

_____

_____

The following sections of this MMI were performed.

Section Description	Check (✓) Sections Performed
Inspection	_____
Periodic	_____
Major Safety	_____
Testing	_____
Preventative Maintenance	_____

Data Sheets included in this package are_____
(list data sheet numbers)

MECHANICAL MAINTENANCE INSTRUCTION 117

Data Cover Sheet (Continued)

Was any corrective maintenance performed as a result of this MMI?_____
Yes/No

Description of Corrective Maintenance:_____

_____

_____

_____

Post Maintenance Testing

Post maintenance load testing required due to corrective maintenance on load bearing members._____
Yes/No

Post maintenance operability test required due to corrective maintenance on operating components._____
Yes/No

Maintenance Supervisor_____Date_____

All necessary prerequisites met._____ _____
Yes/No Person(s) Performing Instruction

Return to Service items

Work area cleaned._____
Yes/No

Hold Orders released._____
Yes/No

Signs removed._____ _____
Yes/No Person(s) Performing Instruction

DATA SHEET
MAJOR OVERHEAD CRANE

FREQUENT INSPECTION

MECHANICAL MAINTENANCE INSTRUCTION 117
Data Sheet 1

REACTOR/TURBINE/RADWASTE/BUILDING

CRANE OPERATORS DAILY CHECKLIST

Date_____ Shift_____ Crane ID_____

Crane Operator_____

Corresponding instruction step; 8.1.1

Complete the following checklist and forward to the Mechanical Maintenance Supervisor. Note: The Data Cover Sheet for this instruction need not accompany this data sheet.

		(Check One) Acceptable	Unacceptable
1.	Visual inspection of hoist ropes, end attachments, load plates, load cells, hooks, safety latches, and crane capacity markings. (No measuring devices necessary.)	_____	_____
2.	Visual inspection of lifting slings or chains to be used during the shift.	_____	_____
3.	An approved fire extinguisher, in proper working condition, is mounted in the cab or other designated locations.	_____	_____
4.	Visual inspection of the crane for leaks, cleanliness, loose objects, open panels, and excessive wear of any mechanical component.	_____	_____
5.	Proper operation of all controls (with no load on hoists).	_____	_____
6.	Proper operation of all brakes (the load brake should be checked at the first heavy lift by stopping the lift when the full weight is first taken by the crane and verifying the brake holds without drifting).	_____	_____
7.	Proper operation of all limit switches (the hoist down limit switch may be omitted from checking). NOTE: The upper limit switch and other limit switches are to be checked by "inching" to the switch or moving at the slowest speed without a load on the hoist.	_____	_____

MAJOR OVERHEAD CRANE

FREQUENT INSPECTION

Data Sheet 1 (Continued)

CRANE OPERATORS DAILY CHECKLIST

	(Check One) Acceptable	Unacceptable
8. Verify proper operation of load indication devices on the first lift of the day.	_____	_____
9. Verify proper operation of bridge movement warning devices and manually operated devices.	_____	_____

Retention: Period - Six years; Responsibility - Mechanical Maintenance Supervisor

DATA SHEET
MAJOR AND MINOR OVERHEAD CRANE

PERIODIC INSPECTION

MECHANICAL MAINTENANCE INSTRUCTION 117
Data Sheet 2

TR #_____ Crane ID_____ Unit_____ Date_____

Person(s) Performing Inspection_____

Corresponding Instruction step: 8.1.2

Item Checklist	Initial When Completed
1. Proper brake setting.	_____
2. Brake system components checked for wear.	_____
3. Structural members checked for deformation, corrosion and cracks.	_____
4. Check for loose bolts and rivets.	_____
5. Check pins, bearing, shafts, gears, rollers, locking and clamping devices for wear, cracks or distortion.	_____
6. Chain sprockets and chain for wear and stretch.	_____
7. Sight and sound inspection of all gear boxes, track-wheels and bearings.	_____
8. Rails and rail clamps for breaks, flat spots, looseness and alignment.	_____
9. All items under Frequent Inspection (include data sheet).	_____
10. Sheaves and drums for wear and cracks.	_____

REMARKS_____

_____

_____

_____

DATA SHEET
MAJOR AND MINOR OVERHEAD CRANE

MAJOR SAFETY INSPECTION

MECHANICAL MAINTENANCE INSTRUCTION 117
Data Sheet 3

TR #_____ Crane ID _____ Unit_____ Date_____

Person(s) Performing Inspection_____
Corresponding instruction step; 8.1.3

1. Load Test (not applicable to minor cranes)

Major Crane Lift or Load Test Record for past 12 month period indicates a major lift_____
Yes/No

If yes, then fill in the following load test data from the Major Crane Lift or Load Test Record, and include a copy in with this data sheet, otherwise, perform a load test.

If load test is required, the maintenance supervisor is to specify the test load.

_____ _____
Load Test Weight Date

2. Hook Inspection

Hook verified free of surface defects._____
Yes/No

_____
QC Level II NDT PT Inspector

Throat opening verified not more than 15 percent greater than new hook dimension._____
Yes/No

Actual dimension of throat dimensions are:

_____ and _____.
Main Hoist Auxiliary Hoist

NOTE: See Appendix 9 for new hook dimension.

Hook not bent more than 10 percent from plane of unbent hook._____
Yes/No

MAJOR AND MINOR OVERHEAD CRANE

MAJOR SAFETY INSPECTION

Data Sheet 3 (Continued)

3. Wire Rope Inspection

Initial When Complete

a. Rope diameter checked for reduction in diameter.

_____ _____
Nominal Rope Diameter Measured Rope Diameter

Approximate reduction in diameter_____

Reduction in rope diameter acceptable per Appendix 3.

_____ _____
Yes/No

b. Rope checked for wear of outside wires. Wear of outside wires acceptable (less than 1/3 original diameter of individual wire).

_____ _____
Yes/No

c. Rope checked for broken wires.

12 random broken wires in one rope lay_____
Yes/No

4 broken wires in one strand in one rope lay_____
Yes/No

_____

d. Rope checked for corroded or broken wires at end connections.

Corroded or broken wires at end connections.

_____ _____
Yes/No

e. Rope checked for condition of end connections.

Corroded, cracked, bent, worn, or improperly applied end connections.

_____ _____
Yes/No

f. Rope checked for distortion of structure.

Kinking, crushing, cutting, unstranding, or any other damage resulting in distortion of the rope structure.

_____ _____
Yes/No

MAJOR AND MINOR OVERHEAD CRANE

MAJOR SAFETY INSPECTION

Data Sheet 3 (Continued)

3. Wire Rope Inspection (Continued)

Initial When Complete

g. Rope checked for exposure to high temperature.

Exposure to temperature sufficient to discolor the wire or cause deterioration of any portion of the wire rope structure.

_____ Yes/No

_____

4. Periodic Inspection Completed (Include Data Sheets).

_____ Yes/No

DATA SHEET
MAJOR OVERHEAD CRANE

LIFT OR LOAD TEST RECORD
(Reactor, Turbine, & Radwaste Building Cranes)

MECHANICAL MAINTENANCE INSTRUCTION 117
Data Sheet 4

TR #_____ Crane ID_____ Unit_____ Date_____

Crane Operator_____
(Corresponding instruction steps; 8.0 and 8.2

This is a QA Record, 6 year retention.

Return completed data sheet to mechanical maintenance supervisor.

Rated capacity of crane_____tons.
Complete data sheet for each hoist used if crane is multiple hoist.

(i) Weight of item lifted_____lbs/tons.
Include weight of rigging if considered significant (rigging weight greater than 1% of item lifted).

(i) Description of item lifted._____

_____

_____

(i) If this data sheet is to document loads lifted rather than a load test, then enter only the weight and description of the heaviest item lifted during the shift of the person completing this data sheet. A new data sheet must be completed when a different operator relieves the original operator.

DATA SHEET
MINOR OVERHEAD CRANE

LOAD TEST

MECHANICAL MAINTENANCE INSTRUCTION 117
Data Sheet 5

TR #_____ Crane ID_____ Unit_____ Date_____

Crane Operator_____
(Corresponding instruction step; 8.2.2)

This is not a QA Record, but does have a 6 year retention.

Return completed data sheet to mechanical maintenance supervisor.

Rated capacity of crane_____tons.

Weight of test load_____lbs/tons.

DATA SHEET
MAJOR AND MINOR OVERHEAD CRANE

PREVENTATIVE MAINTENANCE

MECHANICAL MAINTENANCE INSTRUCTION 117
Data Sheet 6

TR #_____ Crane ID_____ Unit_____ Date_____

Person(s) performing maintenance_____
(Corresponding instruction step; 8.3)

1. Speed Reducers

QC HOLDPOINT: Applicable only to the Reactor Building Crane. The following QC signature verifies correct lubricant added per Appendix 5.

		Make "✓" to indicate complete				
		Gear case checked for leaks				
			Lubricant replaced			
				Magnetic plug inspected (N/A if gear case does not have a magnetic plug		
					Gears visually inspected	
	a. Bridge Drive					
	Motor Driven					QC Inspector / Date
(i)	Shaft Driven (inline)					QC Inspector / Date
	b. Trolley Drive					QC Inspector / Date
	c. Main Hoist					QC Inspector / Date
(ii)	d. Main Hoist Drum Gear and Pinion					QC Inspector / Date
(ii)	e. Auxiliary Hoist					QC Inspector / Date
(iii)	f. Auxiliary Hoist Drum Gear and Pinion					

(i) Not applicable to Turbine Building Cranes, Radwaste Building Cranes and Maintenance Shop Cranes.

(ii) Not applicable to Radwaste Building Cranes and Maintenance Shop Cranes.

(iii) Not applicable to Reactor Building Crane, Radwaste Building Cranes, and Maintenance Shop Crane.

MAJOR AND MINOR OVERHEAD CRANE

PREVENTATIVE MAINTENANCE

Data Sheet 6 (Continued)

2. Shaft Couplings

Couplings checked for lubricant leakage. _____ Yes/No

Fasteners checked for tightness. _____ Yes/No

3. Bridge and Trolley Wheels

Wheels visually inspected for damage. _____ Yes/No

Wheels lubricated. _____ Yes/No

4. Bridge and Trolley Track Rails

a. Bridge checked for skewing. _____ Yes/No

Trolley checked for skewing. _____ Yes/No

b. Bridge track rails checked for evenness and parallelism. _____ Yes/No

Trolley track rails checked for evenness and parallelism. _____ Yes/No

c. Bridge track rails' fasteners checked for tightness. _____ Yes/No

Trolley track rails' fasteners checked for tightness. _____ Yes/No

5. Equalizer Cylinder (Applicable only to Reactor Building Crane)

a. Cylinder and piping checked for leakage. _____ Yes/No

QC HOLDPOINT: The following QC inspector signature verifies correct type oil added to equalizer cylinder per Appendix 5. N/A if no oil is added.

_____ / _____
QC Inspector Date

b. Fluid level checked. _____ Yes/No

MAJOR AND MINOR OVERHEAD CRANE

PREVENTATIVE MAINTENANCE

Data Sheet 6 (Continued)

(i)6. Wire Rope	Main Hoist	Auxiliary Hoist
a. Rope(s) lubricated.	_____ Yes/No	_____ Yes/No
b. End connections checked for looseness.	_____ Yes/No	_____ Yes/No
c. Hoist reeved correctly.	_____ Yes/No	_____ Yes/No

(i) Auxiliary hoist data sheet signoffs not applicable to Radwaste Building Crane and Maintenance Shop Crane.

(i)7. Wire Rope Drum	Main Hoist	Auxiliary Hoist
a. Rope drum anchor fasteners checked for tightness.	_____ Yes/No	_____ Yes/No
b. Drum surface checked for damage and wear.	_____ Yes/No	_____ Yes/No

(i)Auxiliary hoist data sheet signoffs not applicable to Radwaste Building Crane and Maintenance Shop Crane.

(i)8. Lower and Upper Blocks (including equalizer sheaves).	Main Hoist	Auxiliary Hoist
a. Sheaves inspected for damage.	_____ Yes/No	_____ Yes/No
b. Sheaves' grooves checked for wear.	_____ Yes/No	_____ Yes/No
c. Sheaves' and hook bearings checked for looseness.	_____ Yes/No	_____ Yes/No
d. Sheaves' and hook bearings lubricated.	_____ Yes/No	_____ Yes/No

(i)Auxiliary hoist data sheet signoffs not applicable to Radwaste Building Crane or Maintenance Shop Crane.

(i)9. Brakes

a. Hydraulic system checked for leaks.	_____ Yes/No
b. Hydraulic hose condition checked.	_____ Yes/No

MAJOR AND MINOR OVERHEAD CRANE

PREVENTATIVE MAINTENANCE

Data Sheet 6 . (Continued)

(i)9. Brakes (Continued)

c. Hydraulic fluid level checked. _____ Yes/No

d. Brake liners checked for wear. _____ Yes/No

e. Brake hub checked for scoring. _____ Yes/No

(i)Not applicable to Radwaste Building Cranes or Maintenance Shop Crane.

10. Drip pans (Applicable only to Reactor Building Crane)

a. Pans checked for impending overflow. _____ Yes/No

11. Fasteners

a. Fasteners checked for tightness. _____ Yes/No

REMARKS (List all corrective maintenance performed)_____

_____

_____

_____

APPENDIX 1

MAJOR OVERHEAD CRANE

FREQUENT INSPECTION CHECKLIST

The data sheet for this inspection is taken from Form BF 88 of the plant's Standard Practice Manual. A copy of Form BF 88 is included in this instruction as data sheet 1.

Immediately prior to each shift in which a major overhead crane hoist is to be used, the following items will be checked by the crane operator.

1. Visually inspect hoist ropes, end attachments, load plates, load cell, hooks, safety latches, and crane capacity markings. Obvious degradation of above components is considered unacceptable and must be repaired prior to use.
2. Visual inspection of lifting slings or chains to be used during the shift. Kinked, twisted or otherwise distorted slings, broken wires in wire rope strands, deformed or distorted chain links are unacceptable unless proven otherwise by inspection criteria as stated in MMI 102.
3. An approved fire extinguisher, in proper working condition, is mounted in the cab or other designated locations. Missing or defective fire extinguishers must be repaired or replaced prior to crane use.
4. Visual inspection of the crane for leaks, cleanliness, loose objects, open panels, and excessive wear of any mechanical component. Loose objects and open panels must be secured prior to crane use. Lubricant leaks and evidence of wear must be brought to the attention of the maintenance section for further investigation prior to crane use.
5. Proper operation of all controls (with hoist unloaded). Prior to crane use all controls must be functional.

APPENDIX 1 (Continued)

MAJOR OVERHEAD CRANE

FREQUENT INSPECTION CHECKLIST

6. Proper operation of all brakes. All brakes are to be proven functional prior to crane use with the exception of the load brake which is to be checked at the first heavy lift by stopping the lift when the full weight is first taken by the crane and verifying the brake holds without drifting.
7. Proper operation of all limit switches with the exception of the hoist down limit switch which may be omitted. Check upper limit switch and other limit switches by inching to the switch or moving at the slowest speed without a load on the hoist. Prior to crane use all switches with the exception of the hoist down limit switch, must be proven functional.
8. Verify proper operation of load indication devices on the first lift of the day. These devices, if installed on a crane, must be functional prior to releasing crane for work.
8. Verify proper operation of bridge movement warning devices and manually operated devices. These devices must be proven functional prior to crane use.

APPENDIX 2

MAJOR AND MINOR OVERHEAD CRANE

PERIODIC INSPECTION CHECKLIST

Semiannually the following items will be inspected and data sheet 2 completed.

1. Proper brake setting.
2. Excessive wear on brake system parts, linings, pawls and ratchets.
3. Structural members for deformation, cracks or corrosion.
4. Loose bolts or rivets.
5. Worn, cracked or distorted parts such as pins, bearing, shafts, gears, rollers, locking and clamping devices (including clamps on drums).
6. Excessive wear of chain drive sprockets and excessive chain stretch.
7. Sight and sound inspection of all gear boxes, track wheels, and bearings.
8. Rails and rail clamps for breaks, flat spots, looseness, and general alignment (trolley and bridge skewing).
9. All items listed under Frequent Inspections.
10. Cracked or worn sheaves and drums. Use groove wear indication gauges.

APPENDIX 3

MAJOR AND MINOR OVERHEAD CRANE

MAJOR SAFETY INSPECTION CHECKLIST

Annually each crane will undergo a Major Safety Inspection. This inspection is to be accomplished by performing the Periodic plus the following.

1. Load Test

   Note that this item does not apply to minor cranes since they are load tested annually per the section on testing in this MMI.

   A load test equal to the expected maximum lift is to be performed unless the load lifting record shows a lift of approximately equal or greater weight. The construction acceptance or preoperational tests may be used for new cranes. In lieu of a load test the Major Overhead Crane Lift or Load Test Record, data sheet 4, can be reviewed for the past 12 month period to determine if a major lift (60% or more of rated load) has been made.

   If a major lift has been made it will serve as the same purpose as a test load and verifies that the crane is capable of handling the various load.

2. Hook Inspection

   An inspection of the crane hook for cracks by liquid penetrant testing method will be performed. Hooks shall be measured as part of this inspection to establish that the hook has no more than 15 percent in excess of the new throat opening dimension and that the hook is not bent more than 10 percent from the plane of the unbent hook. Cracks or wear or distortion in excess of the amount stated is cause for replacement of the hook at the discretion of the maintenance supervisor. Liquid dye

APPENDIX 3 (Continued)

MAJOR AND MINOR OVERHEAD CRANE

MAJOR SAFETY INSPECTION CHECKLIST

2. Hook Inspection (Continued)

penetrant testing to be done by QA inspector, level II.

3. Wire Rope Inspection

The following items are to be used as criteria for wire rope replacement.

a. Reduction of rope diameter below nominal diameter due to loss of core support, internal or external corrosion, or wear of outside wires, as follows:

Nominal Diameter	Reduction Greater Than
Up to 5/16" incl.	1/64"
3/8 " - 1/2"	1/32"
9/16" - 3/4"	3/64"
7/8 " - 1 1/8"	1/16"
1 1/4 " - 1 1/2"	3/32"

b. Wear of one-third the original diameter of outside individual wires.

c. Individual wires broken, 12 random in one rope lay or 4 broken in one strand in one rope lay.

d. Corroded or broken wires at end connections.

e. Corroded, cracked, bent, worn, or improperly applied end connections.

f. Kinking, crushing, cutting, unstranding, or any other damage resulting in distortion of the rope structure.

g. Exposure to temperature sufficient to discolor the wire or cause deterioration of any portion of the wire rope structure.

APPENDIX 4

LOAD TESTING

The following instructions are to be used when load testing overhead traveling bridge cranes.

1. Hoist the test load a distance to assure that the load is supported by the crane, and held, by the hoist brake(s).
2. Transport the test load by means of the trolley for the full length of the bridge.
3. Transport the test load by means of the bridge for the full length of the runway in one direction with the trolley as close to the extreme righthand end of the crane as practical and in the other direction with the trolley as close to the extreme lefthand end of the crane as practical.
4. Lower the test load, and stop and hold the load with the brake(s).

Data sheets 4 and 5 will be used to document load tests for major and minor overhead cranes, respectively.

APPENDIX 5

LUBRICANT SPECIFICATIONS

Component	Application Method	TVA Lubricant Specification
1. Speed Reducers		
a. Turbine Building Cranes		
1. Bridge Drive - Ederer #A-2200	Oil Bath	L-EPRG-3
2. Trolley Drive - Philadelphia Gear #3311	Oil Bath	L-EPRG-3
3. Main Hoist - Ederer #4-S-320	Oil Bath	L-EPRG-3
4. Main Hoist Drum Gear and Pinion	Brush	L-FGC-5
5. Auxiliary Hoist - Ederer #3-C-100	Oil Bath	L-EPRG-3
6. Auxiliary Hoist Drum Gear and Pinion	Brush	L-FGC-5
b. Reactor Building Crane		
1. Bridge Drive (Motor) - Ederer #3-C-25	Oil Bath	L-EPRG-3
2. Bridge Drive - Ederer #2-C-30	Oil Bath	L-EPRG-3
3. Trolley Drive - Link Belt #HT-1650	Oil Bath	L-EPRG-3
4. Main Hoist - Link Belt #HT-2450	Oil Bath	L-EPRG-3
5. Main Hoist Drum Gear and Pinion	Brush	L-FGC-5
6. Auxiliary Hoist - Ederer #4-F-150	Oil Bath	L-EPRG-3
c. Radwaste Building Crane		
1. Bridge Drive - Dorris #8318	Oil Bath	L-EPRG-3
2. Trolley Drive - Dorris #8340	Oil Bath	L-EPRG-3
3. Main Hoist - Ederer #NA	Oil Bath	L-EPRG-3

APPENDIX 5 (Continued)

LUBRICANT SPECIFICATIONS

Component	Application Method	TVA Lubricant Specification
1. Speed Reducers (Continued)		
d. Maintenance Shop Hoist		
1. Bridge Drive	Oil Bath	L-EPRG-3
2. Trolley Drive	Oil Bath	L-EPRG-3
3. Hoist Gear Case	Oil Bath	L-EPRG-3
11. Bearings		
a. Pillow Block (drive shafts, drum mount)	Grease gun	GP-1
b. Flange Mount (bridge and trolley wheels)	Grease gun	GP-1
c. Roller (sheaves)	Grease gun	GP-1
d. Thrust (hooks)	Grease gun	GP-1
111. Shaft Coupling	Grease gun	GP-1
1V. Equalizer Cylinder	Reservoir	STO-1
(1) V. Wire Rope	Brush, Spray, or Bath	L-FGC-5

(1) Other type lubricants can be approved for wire rope lubrication.

Reactor Building Crane
Main Hoist

APPENDIX 6

ROPE REEVING

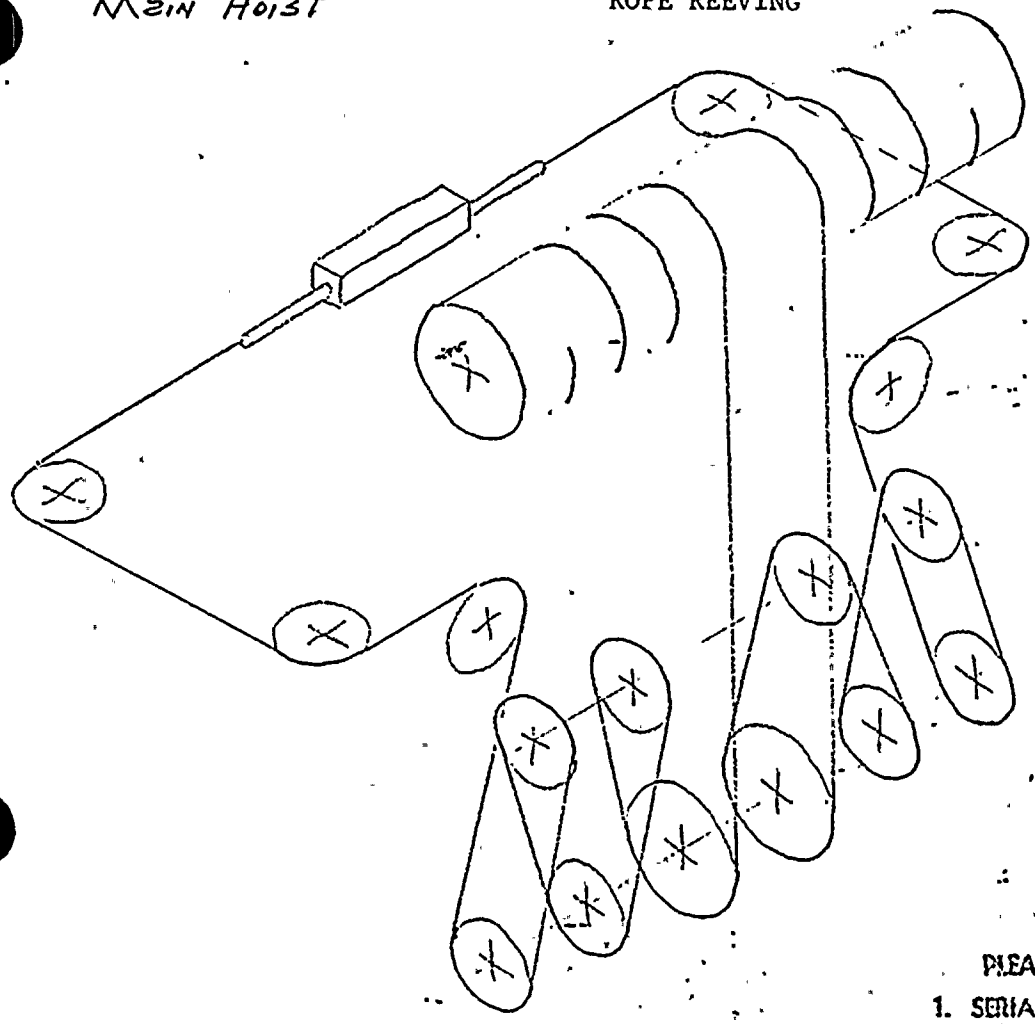

ROPE
CLAMPING
DETAIL

PLEASE ORDER PARTS BY:
1. SERIAL NO. OF EQUIPMENT
2. EDERER PARTS DWG. NO.
3. ITEM NO. (ON PARTS DWG.)

△ TWO ROPES-SIX PART SINGLE REEVING EACH
△ ONE END ANCHORED TO DRUM EACH
SIZE 1¼ DIA. x 906'-0" ±1" LONG (TWO EQUAL LENGTHS)
TYPE 6X37 EIPS/IWRC

M-HOIST

[illegible] CORPORATION

ROPE REEVING DIAGRAM

TWELVE PARTS

D-5619

ROPE REEVING

Reactor Building Crane
Auxiliary Hoist

ROPE
CLAMPING
DETAIL

PLEASE ORDER PARTS BY:

1. SERIAL NO. OF EQUIPMENT
2. EDERER PARTS DWG. NO.
3. ITEM NO. (ON PARTS DWG.)

TWO ROPES-BOTH ENDS ANCHORED TO DRUM

SIZE- 5/8 DIA. x 161'-0" ±1" LONG (TWO EQUAL LENGTHS)

TYPE - 6 X 37 STAINLESS STEEL / IWRC

A-HOIST

NO. E5559

EDERER CORPORATION

ROPE REEVING DIAGRAM

TWIN STYLE

D.5620

TENNESSEE VALLEY AUTHORITY
BROWNS FERRY NUCLEAR PLANT
UNITS 1-3 RADWASTE CRANE
CONTRACT NO. 69C33-64696

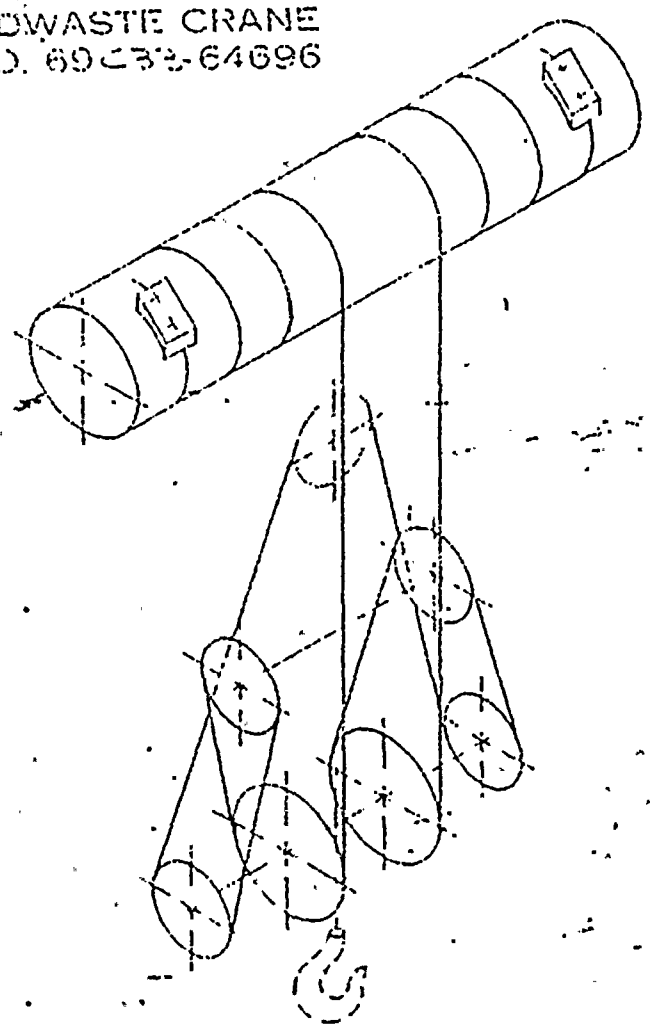

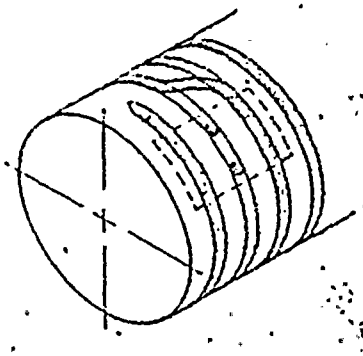

ROPE CLAMPING DETAIL

ONE ROPE - FOUR PART DOUBLE REEVING

BOTH ENDS ANCHORED TO DRUM

SIZE - 5/8" DIA. x 244'-0" LONG

TYPE - 6 x 37 IPS/FC

PLEASE ORDER PARTS BY:
1. SERIAL NO. OF EQUIPMENT
2. EDERER PARTS DWG. NO.
3. ITEM NO. (ON PARTS DWG.)

NOTE: USE SPECIFIED ROPE ONLY, FOR REPLACEMENTS. SUBSTITUTIONS SHOULD NOT BE MADE.

S.O. E-5617

EDERER CORPORATION
2931 1ST AVE SO SEATTLE, WASH. U.S.A.

ROPE REEVING DIAGRAM

EIGHT PARTS

D-5582

5-15-69

APPENDIX 6 (Continued)

ROPE REEVING

TURBINE BUILDING CRANE

MAIN AND AUXILIARY HOIST

AND

MAINTENANCE SHOP CRANE HOIST

To Be Added Later

ATTACHMENT 7

BREAK-IN PROCEDURE FOR NEW WIRE ROPE

1. After replacement, cycle the hoist rope ten times from the maximum down position to the maximum up position and back without load.
2. Cycle the hoist rope one time as above with approximately one-fourth of the hoist's rated load suspended from the hook.
3. Cycle the hoist rope one time as above with approximately one-half of the hoist's rated load suspended from the hook.
4. Cycle the hoist rope one time as above with approximately three-fourths of the hoist's rated load suspended from the hook.
5. Finally, cycle the hoist rope 10 times as above with the full rated load of the hoist suspended from the hook. Note that the duty cycle specification of most cranes installed in powerhouses restricts the frequency of full load lifts to prevent overheating the hoist motor and power converters.

APPENDIX 8

Items from DPM N74M15 which Electrical Maintenance is Responsible for

1. Part B - Periodic Inspections
   a. Bridge motor commutator and brushes.
   b. Trolley motor commutation and brushes.
   c. Main hoist motor commutator and brushes.
   d. Auxiliary hoist motor commutator and brushes.
   e. All MG set commutator and brushes.
   f. Sight and sound inspection of all motor bearings.
   g. All controllers (operation and identification tags).
   h. All limit switches.
   i. Visual inspection of cabinets for loose articles, loose wires, and any evidence of unusual arcing or burning.
   j. Check calibration and prove proper operation of load indication devices.
   k. Check proper operation of emergency stop buttons.
   l. Check all radio control functions.
2. Part C - Major Safety Inspection
   a. Prove proper operation of the phase loss or reversal relay.
   b. Prove proper operation of the IOC relay.
   c. Prove proper operation of hoist field loss relays.
   d. Verify operation of the upper limit switch at increasing speeds.

APPENDIX 9

CRANE HOOK DIMENSIONS

To Be Added Later

ADDITIONAL WORK TO COMPLETE MMI 117

1. Write letter to Ederer and obtain information on following:
   a. Instructions and criteria for measuring bridge and trolley wheel diameter.
   b. Detailed information on equalizer cylinder, i.e., position adjustment and dampening rate adjustment.
   c. Drawings showing reeving for Turbine Building Crane's Main and Auxiliary Hoists.
   d. Brake adjustment instructions.
   e. Maintenance manual on hydraulically operated brakes.
   f. Determine if cranes have emergency dynamic braking and if so an operation and maintenance manual.
   g. Does load rating include weight of lower block?
   h. Drawings showing new hook dimensions.
2. Locate operation and maintenance manual on maintenance shop crane.
   a. Drawings showing new hook dimension.
   b. Drawing showing proper rope reeving.