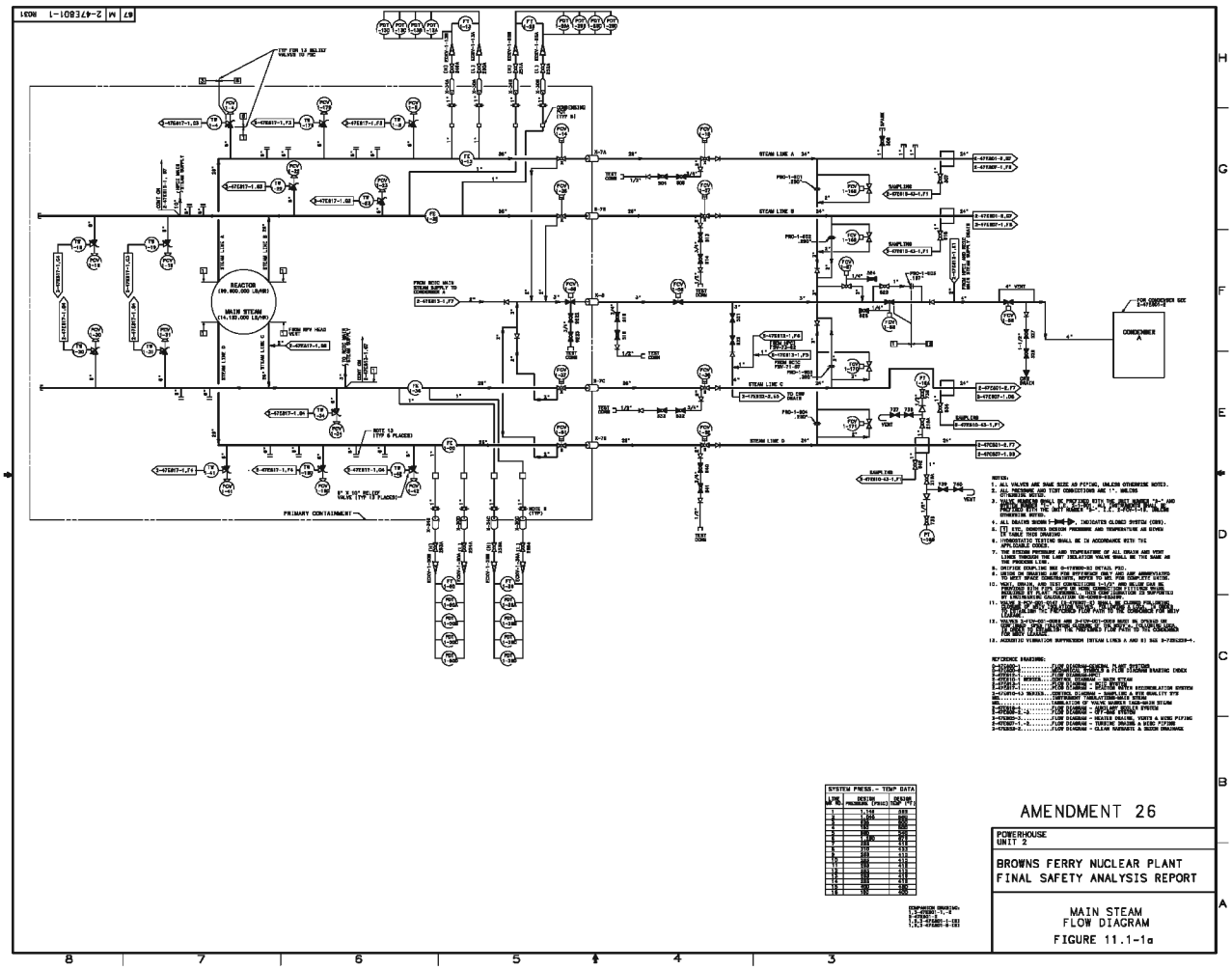
REACTOR
MAIN STEAM
STEAM LINE A
STEAM LINE B
STEAM LINE C
STEAM LINE D
CONDENSER A
PRIMARY CONTAINMENT
SAMPLING
VENT
NOTES:
1. ALL VALVES ARE SAME SIZE AS PIPING, UNLESS OTHERWISE NOTED.
2. ALL PRESSURE AND TEMP CONDITIONS ARE 1" UNLESS OTHERWISE NOTED.
3. VALVE NUMBERS WHICH BE PREFIXED WITH THE UNIT NUMBER "2-" AND PREFIXED WITH THE UNIT NUMBER "2-" FOR 2-FCV-1-1 ARE THE SAME UNLESS OTHERWISE NOTED.
4. ALL DRAINS SHOWN ⊢▷◁⊣ INDICATES CLOSED SYSTEM (CDS).
5. (T) EQ. DENOTES DESIGN PRESSURE AND TEMPERATURE AS GIVEN IN TABLE THIS DRAWING.
6. HYDROSTATIC TESTING SHALL BE IN ACCORDANCE WITH THE PROCESS DIAGRAM.
7. THE DOUBLE PRESSURE AND TEMPERATURE OF ALL DRAIN AND VENT LINES THROUGH THE LAST ISOLATION VALVE SHALL BE THE SAME AS THE PROCESS LINE.
8. ORIFICE DOUBLING BOX 0-47F800-63 DETAIL FIG.
9. ALL PIPE SUPPORTS ARE DESIGNED TO ACCOMMODATE LAST ANTICIPATED SEISMIC BOUNDARY. REFER TO SEL FIG DOWN-FIT DETAIL.
10. VENT, DRAIN, AND SEAL CONNECTIONS 1-1/2" AND BELOW ARE BE DESIGNED TO 1-1/2" SCHEDULE 160 PIPE. ALL PIPE SUPPORTS ARE DESIGNED TO 1-1/2" SCHEDULE 160 PIPE. ALL PIPE SUPPORTS TO SUPPORTED BY SEISMIC CALCULATION CA-SCHED-01.
11. VENT & DRAIN SHALL BE SPECIFIED WITH A MINIMUM PRESSURE RATING OF 1500 PSIG. ALL VENT & DRAIN LINES SHALL BE 1-1/2" SCHEDULE 160 PIPE. PROVIDE FLOW PATH IN THE EVENT OF DRY CLEANING.
12. VENT & DRAIN LINES SHALL CONTAIN NO VALVES & SHALL BE SLOPED TO DRAIN. ALL VENT & DRAIN LINES SHALL BE SLOPED TO DRAIN. ALL VENT & DRAIN LINES SHALL BE SLOPED TO DRAIN. ALL VENT & DRAIN LINES SHALL BE SLOPED TO DRAIN.
13. ACCEPTED VIBRATION SUPPRESSOR INTAKE LINES A AND B1 BAS 0-7235233-4.
REFERENCE DRAWING:
0-47E800-1 ..... FLOW DIAGRAM-GENERAL PLANT DETAIL
0-47E800-2 ..... INSTRUMENT DETAILS - FLOW & FLOW DIAGRAM BEARING INDEX
0-47E810-1 ..... MAIN STEAM - MAIN STEAM
0-47E810-1 ..... MAIN STEAM - MAIN STEAM
0-47E811-1 ..... FLOW DIAGRAM - MAIN STEAM
0-47E811-2 ..... FLOW DIAGRAM - MAIN STEAM
0-47E812-1 ..... FLOW DIAGRAM - MAIN STEAM & ACCUMULATOR SYSTE

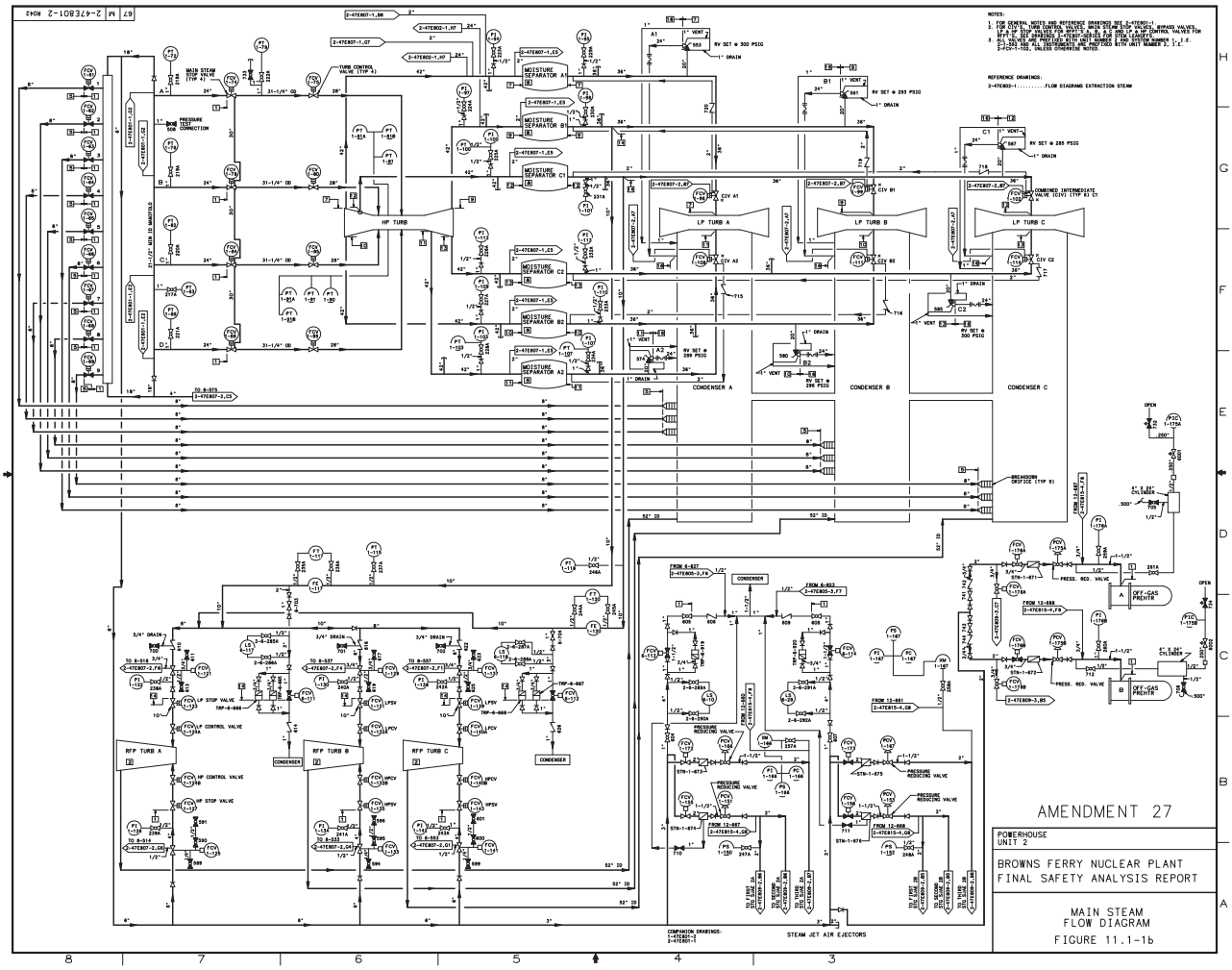
NOTES:
REFERENCE DRAWINGS:
HP TURB
LP TURB A
LP TURB B
LP TURB C
CONDENSER A
CONDENSER B
CONDENSER C
RFP TURB A
RFP TURB B
RFP TURB C
STEAM JET AIR EJECTORS
AMENDMENT 27
POWERHOUSE
UNIT 2
BROWNS FERRY NUCLEAR PLANT
FINAL SAFETY ANALYSIS REPORT
MAIN STEAM
FLOW DIAGRAM
FIGURE 11.1-1b

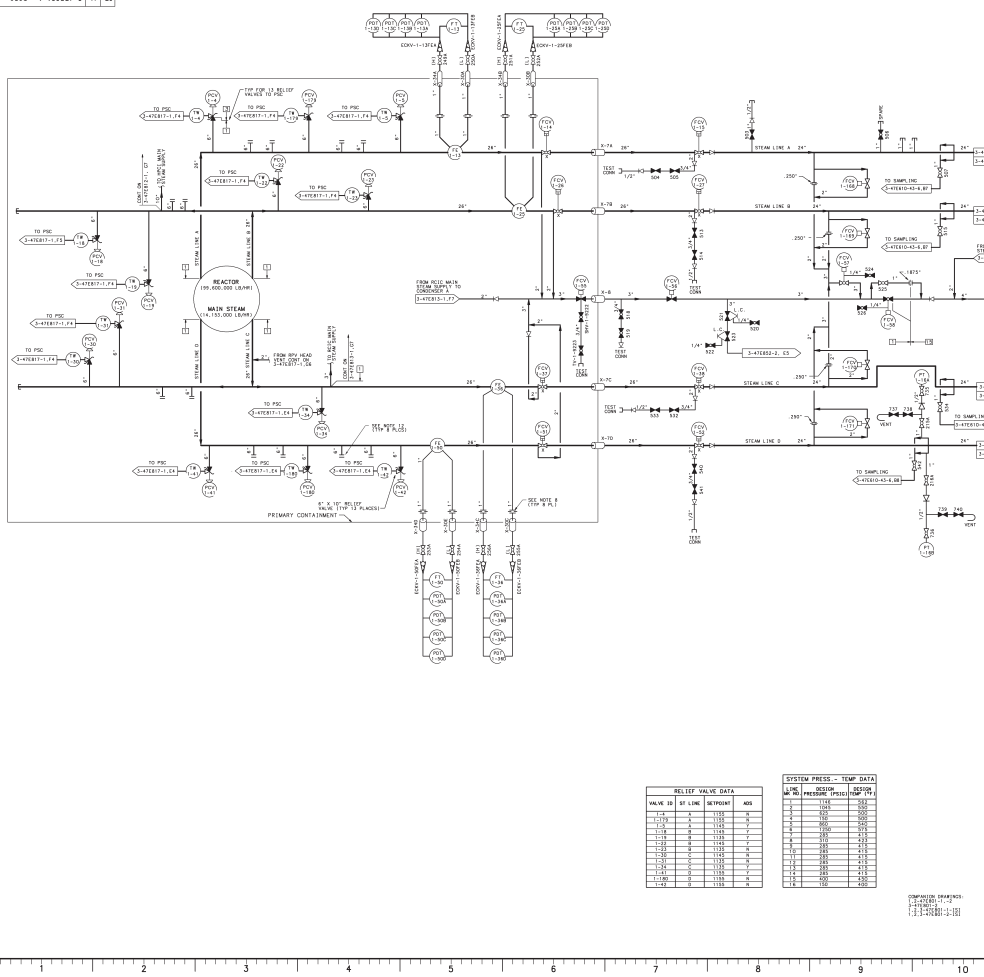

RELIEF VALVE DATA			
VALVE ID	BY LINE	SETPOINT	ADS
1-4	A	1155	N
1-119	A	1155	N
1-17	B	1145	Y
1-18	B	1145	Y
1-19	B	1135	Y
1-22	B	1145	Y
1-23	B	1135	N
1-20	C	1145	N
1-21	C	1135	N
1-32	C	1135	Y
1-31	C	1135	Y
1-180	D	1155	N
1-42	D	1155	N

SYSTEM PRESS. - TEMP DATA		
LINE NO.	DESIGN PRESSURE (PSIG)	DESIGN TEMP (°F)
1	1145	563
2	1045	550
3	1145	550
4	750	500
5	850	540
6	1250	575
7	415	415
8	415	415
9	285	415
10	285	415
11	285	415
12	285	415
13	285	415
14	285	415
15	400	450
16	150	400

AMENDMENT 25

POWERHOUSE
UNIT 3

BROWNS FERRY NUCLEAR PLANT
FINAL SAFETY ANALYSIS REPORT

MAIN STEAM
FLOW DIAGRAM

FIGURE 11.1-1c

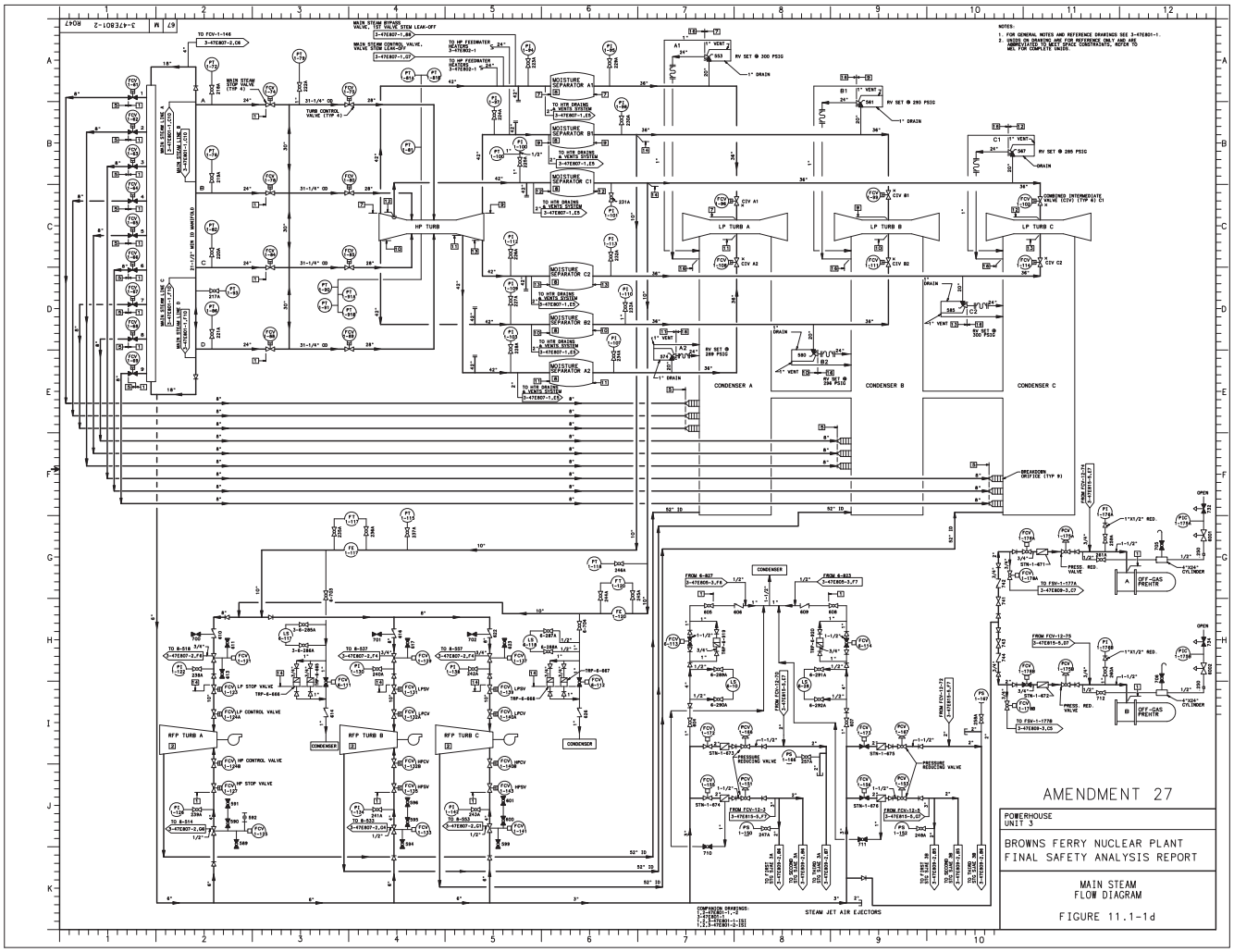
NOTES:
1. FOR GENERAL NOTES AND REFERENCE DRAWINGS SEE 3-47E801-1.
2. UNITS ON DRAWING ARE FOR REFERENCE ONLY AND ARE NOMINALLY TO MEET SPACE CONSTRAINTS. REFER TO MEL FOR COMPLETE UNITS.
HP TURB
LP TURB A
LP TURB B
LP TURB C
CONDENSER A
CONDENSER B
CONDENSER C
RFP TURB A
RFP TURB B
RFP TURB C
STEAM JET AIR EJECTORS
AMENDMENT 27
POWERHOUSE
UNIT 3
BROWNS FERRY NUCLEAR PLANT
FINAL SAFETY ANALYSIS REPORT
MAIN STEAM
FLOW DIAGRAM
FIGURE 11.1-1d

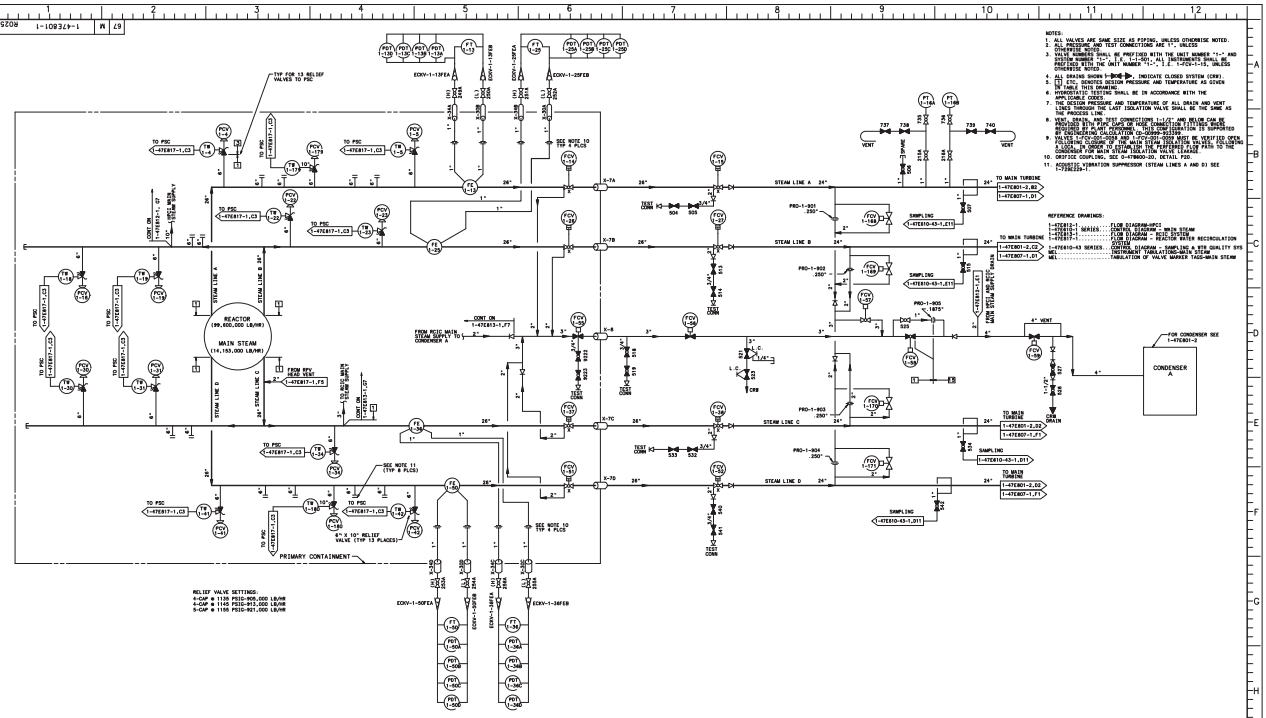

RELIEF VALVE DATA			
VALVE ID	ST LINE	SETPOINT	ADS
1-4	A	1155	N
1-179	A	1155	N
1-5	A	1145	Y
1-18	B	1145	N
1-19	B	1135	Y
1-22	B	1145	Y
1-23	B	1135	N
1-30	C	1145	Y
1-31	C	1135	Y
1-34	C	1135	Y
1-41	D	1155	N
1-180	D	1155	N
1-42	D	1155	N

SYSTEM PRESS.- TEMP DATA		
LINE NO.	DESIGN PRESSURE (PSIG)	DESIGN TEMP (°F)
1	1145	562
2	1045	550
3	625	500
4	150	500
5	1250	575
6	1250	575
7	385	415
8	310	425
9	285	415
10	285	415
11	285	415
12	285	415
13	285	415
14	275	415
15	275	415
16	150	400

COMPANION DRAWING:
1-47E801-2

AMENDMENT 27

POWERHOUSE
UNIT 1

BROWNS FERRY NUCLEAR PLANT
FINAL SAFETY ANALYSIS REPORT

MAIN STEAM
MECHANICAL FLOW DIAGRAM

FIGURE 11.1-1e

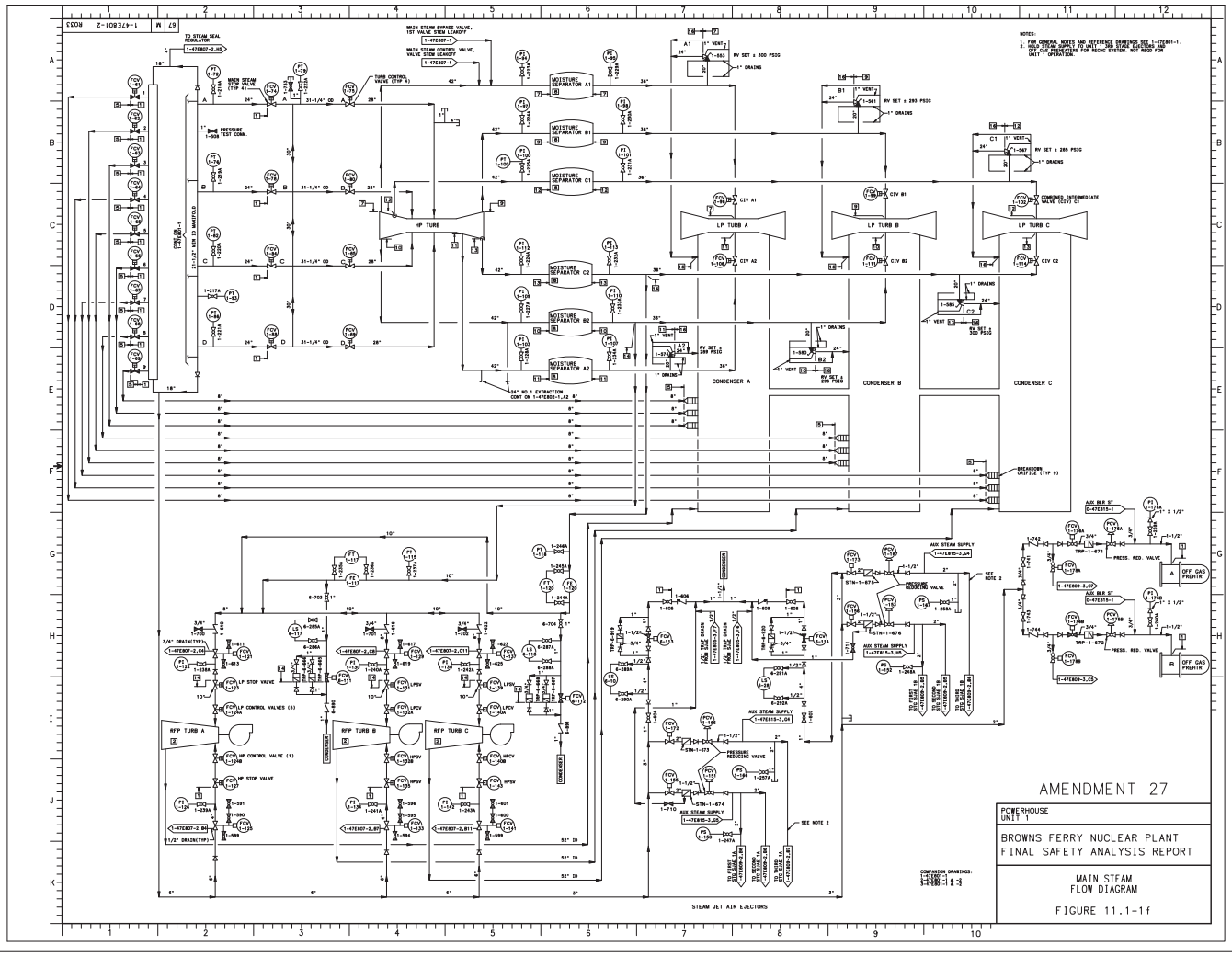
HP TURB
LP TURB A
LP TURB B
LP TURB C
CONDENSER A
CONDENSER B
CONDENSER C
RFP TURB A
RFP TURB B
RFP TURB C
STEAM JET AIR EJECTORS
AMENDMENT 27
POWERHOUSE
UNIT 1
BROWNS FERRY NUCLEAR PLANT
FINAL SAFETY ANALYSIS REPORT
MAIN STEAM
FLOW DIAGRAM
FIGURE 11.1-1f