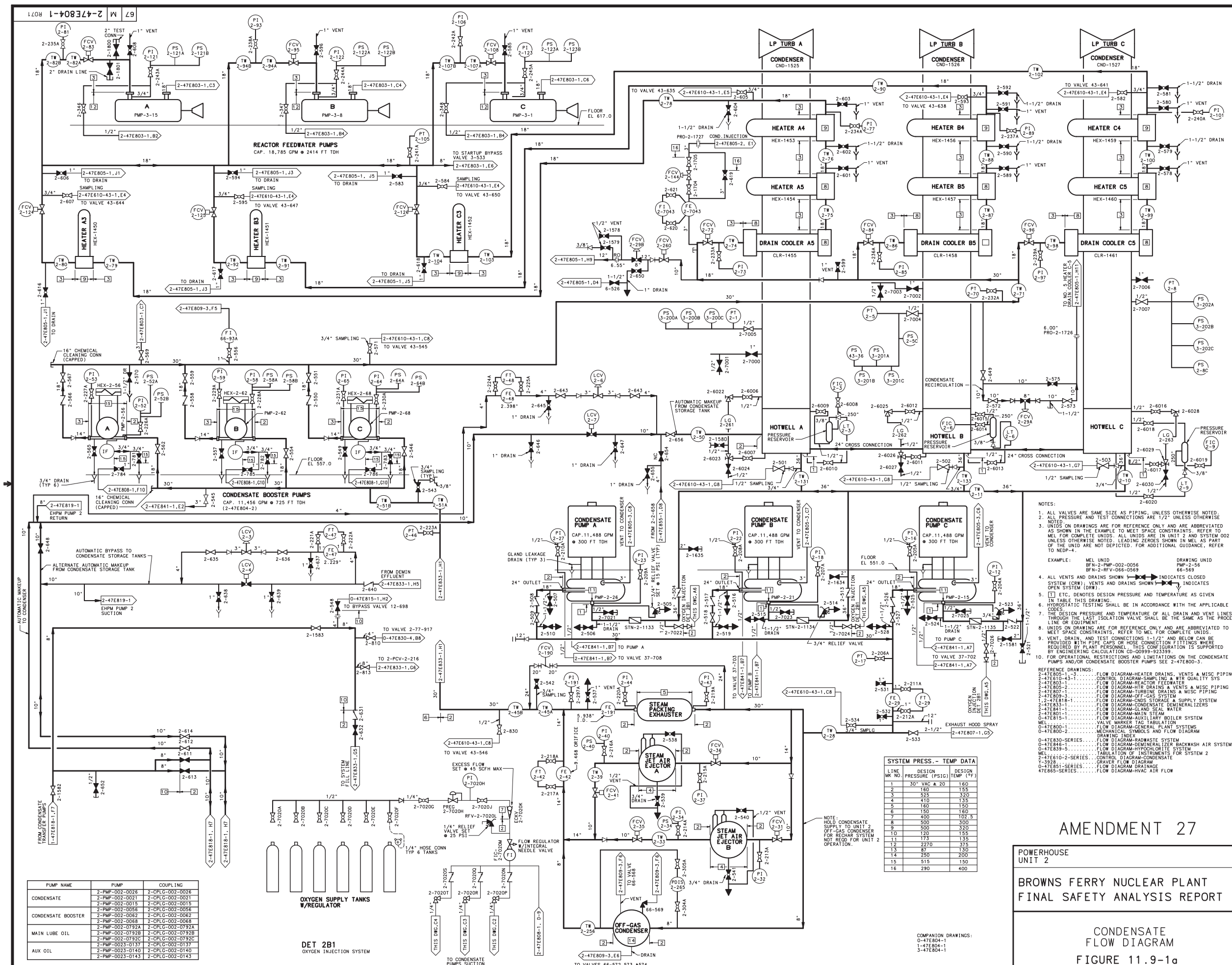

NOTES:

1. ALL VALVES ARE SAME SIZE AS PIPING, UNLESS OTHERWISE NOTED.
2. ALL PRESSURE AND TEST CONNECTIONS ARE 1/2" UNLESS OTHERWISE NOTED.
3. UNIDS ON DRAWINGS ARE FOR REFERENCE ONLY AND ARE ABBREVIATED AS SHOWN IN THE EXAMPLE TO MEET SPACE CONSTRAINTS. REFER TO MEL FOR COMPLETE UNIDS. ALL UNIDS ARE IN UNIT 2 AND SYSTEM 002 UNLESS OTHERWISE NOTED. LEADING ZEROES SHOWN IN MEL AS PART OF THE UNID ARE NOT DEPICTED. FOR ADDITIONAL GUIDANCE, REFER TO NEDP-4.

   EXAMPLE: MEL UNID: BFN-2-PMP-002-0056, BFN-2-RFV-066-0569 — DRAWING UNID: PMP-2-56, 66-569
4. ALL VENTS AND DRAINS SHOWN INDICATES CLOSED SYSTEM (CRW); VENTS AND DRAINS SHOWN INDICATES OPEN SYSTEM (DRW).
5. [1] ETC. DENOTES DESIGN PRESSURE AND TEMPERATURE AS GIVEN IN TABLE THIS DRAWING.
6. HYDROSTATIC TESTING SHALL BE IN ACCORDANCE WITH THE APPLICABLE CODES.
7. THE DESIGN PRESSURE AND TEMPERATURE OF ALL DRAIN AND VENT LINES THROUGH THE LAST ISOLATION VALVE SHALL BE THE SAME AS THE PROCESS LINE OR EQUIPMENT.
8. UNIDS ON DRAWING ARE FOR REFERENCE ONLY AND ARE ABBREVIATED TO MEET SPACE CONSTRAINTS, REFER TO MEL FOR COMPLETE UNIDS.
9. VENT, DRAIN, AND TEST CONNECTIONS 1-1/2" AND BELOW CAN BE PROVIDED WITH PIPE CAPS OR HOSE CONNECTION FITTINGS WHERE REQUIRED BY PLANT PERSONNEL. THIS CONFIGURATION IS SUPPORTED BY ENGINEERING CALCULATION CD-Q0999-923399.
10. FOR OPERATIONAL RESTRICTIONS AND LIMITATIONS ON THE CONDENSATE PUMPS AND/OR CONDENSATE BOOSTER PUMPS SEE 2-47E800-3.

REFERENCE DRAWINGS:
2-47E805-1,-3.......FLOW DIAGRAM-HEATER DRAINS, VENTS & MISC PIPING
2-47E610-43-1.......CONTROL DIAGRAM-SAMPLING & WTR QUALITY SYS
2-47E803-1..........FLOW DIAGRAM-REACTOR FEEDWATER
2-47E805-2..........FLOW DIAGRAM-HTR DRAINS & VENTS & MISC PIPING
2-47E807-1..........FLOW DIAGRAM-TURBINE DRAINS & MISC PIPING
2-47E809-3..........FLOW DIAGRAM-OFF-GAS SYSTEM
1,2-47E818-1........FLOW DIAGRAM-CNDS STORAGE & SUPPLY SYSTEM
2-47E833-1..........FLOW DIAGRAM-CONDENSATE DEMINERALIZERS
2-47E841-1..........FLOW DIAGRAM-GLAND SEAL WATER
2-47E801-1..........FLOW DIAGRAM-MAIN STEAM
0-47E815-1..........FLOW DIAGRAM-AUXILIARY BOILER SYSTEM
MEL.................VALVE MARKER TAG TABULATION
0-47E800-1..........FLOW DIAGRAM-GENERAL PLANT SYSTEMS
0-47E800-2..........MECHANICAL SYMBOLS AND FLOW DIAGRAM DRAWING INDEX
0-47E830-SERIES.....FLOW DIAGRAM-RADWASTE SYSTEM
0-47E846-1..........FLOW DIAGRAM-DEMINERALIZER BACKWASH AIR SYSTEM
0-47E839-5..........FLOW DIAGRAM-HYPOCHLORITE SYSTEM
MEL.................TABULATION OF INSTRUMENTS FOR SYSTEM 2
2-47E610-2-SERIES...CONTROL DIAGRAM-CONDENSATE
Y-3928..............GRAVER FLOW DIAGRAM
0-47E851-SERIES.....FLOW DIAGRAM DRAINAGE
47E865-SERIES.......FLOW DIAGRAM-HVAC AIR FLOW

SYSTEM PRESS.- TEMP DATA

| LINE MK NO. | DESIGN PRESSURE (PSIG) | DESIGN TEMP (°F) |
|---|---|---|
| 1 | 30" VAC & 20 | 160 |
| 2 | 160 | 155 |
| 3 | 525 | 320 |
| 4 | 410 | 135 |
| 5 | 160 | 150 |
| 6 | 150 | 160 |
| 7 | 400 | 102.5 |
| 8 | 500 | 300 |
| 9 | 500 | 320 |
| 10 | 120 | 155 |
| 11 | 173 | 135 |
| 12 | 2270 | 375 |
| 13 | 87 | 130 |
| 14 | 250 | 200 |
| 15 | 515 | 150 |
| 16 | 290 | 400 |

COMPANION DRAWINGS:
0-47E804-1
1-47E804-1
3-47E804-1

| PUMP NAME | PUMP | COUPLING |
|---|---|---|
| CONDENSATE | 2-PMP-002-0026 | 2-CPLG-002-0026 |
| | 2-PMP-002-0021 | 2-CPLG-002-0021 |
| | 2-PMP-002-0015 | 2-CPLG-002-0015 |
| CONDENSATE BOOSTER | 2-PMP-002-0056 | 2-CPLG-002-0056 |
| | 2-PMP-002-0062 | 2-CPLG-002-0062 |
| | 2-PMP-002-0068 | 2-CPLG-002-0068 |
| MAIN LUBE OIL | 2-PMP-002-0792A | 2-CPLG-002-0792A |
| | 2-PMP-002-0792B | 2-CPLG-002-0792B |
| | 2-PMP-002-0792C | 2-CPLG-002-0792C |
| AUX OIL | 2-PMP-0023-0137 | 2-CPLG-002-0137 |
| | 2-PMP-0023-0140 | 2-CPLG-002-0140 |
| | 2-PMP-0023-0143 | 2-CPLG-002-0143 |

AMENDMENT 27

POWERHOUSE
UNIT 2

BROWNS FERRY NUCLEAR PLANT
FINAL SAFETY ANALYSIS REPORT

CONDENSATE
FLOW DIAGRAM
FIGURE 11.9-1a

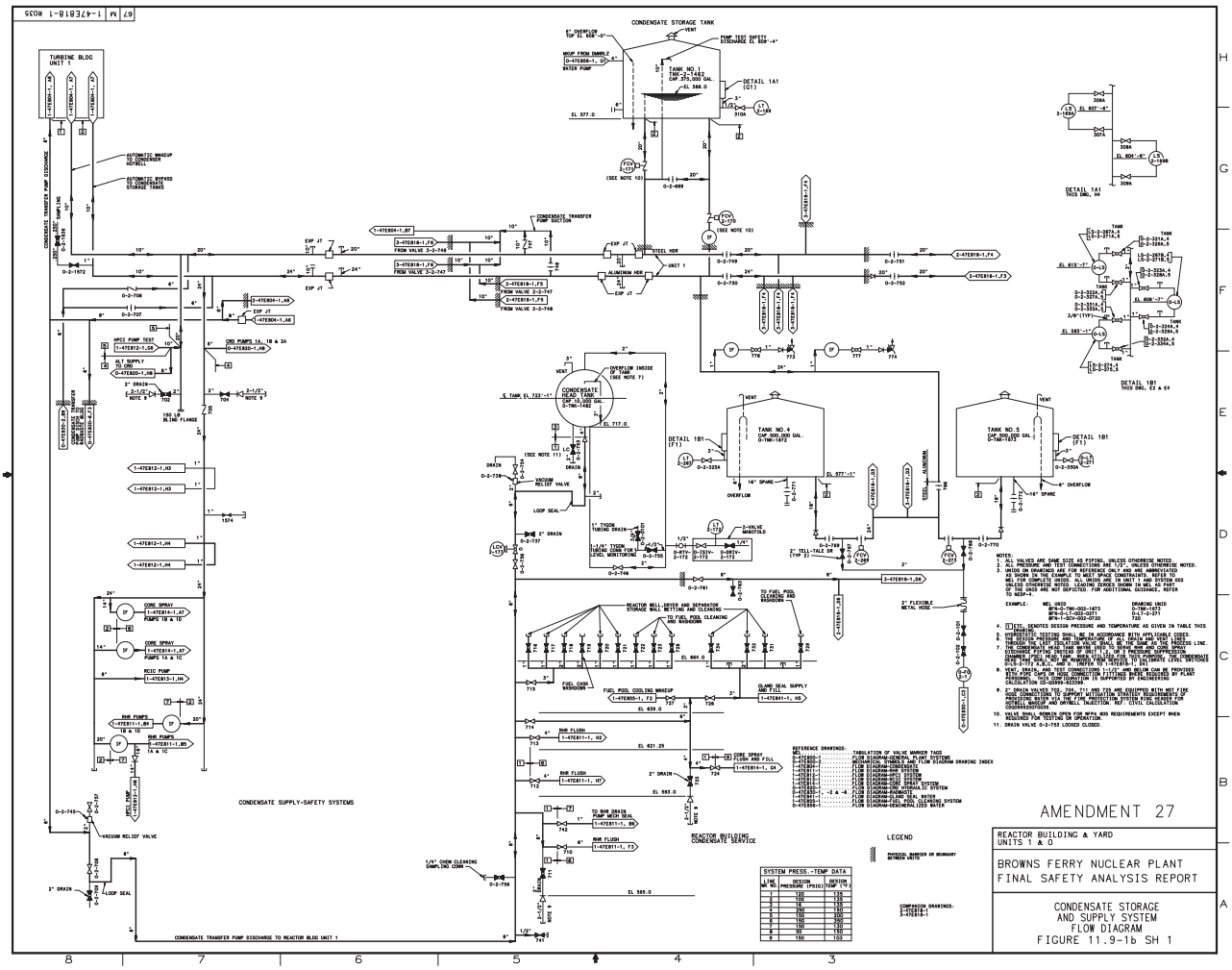
CONDENSATE STORAGE TANK
TURBINE BLDG UNIT 1
TANK NO.1
CONDENSATE TRANSFER PUMP DISCHARGE
CONDENSATE TRANSFER PUMP SUCTION
CONDENSATE HEAD TANK
TANK NO.4
TANK NO.5
CORE SPRAY PUMPS 1A & 1C
CORE SPRAY PUMPS 1B & 1D
RCIC PUMP
RHR PUMPS
CONDENSATE SUPPLY-SAFETY SYSTEMS
CONDENSATE TRANSFER PUMP DISCHARGE TO REACTOR BLDG UNIT 1
REACTOR BUILDING CONDENSATE SERVICE
FUEL POOL COOLING WATER
AMENDMENT 27
REACTOR BUILDING & YARD
UNITS 1 & 2
BROWNS FERRY NUCLEAR PLANT
FINAL SAFETY ANALYSIS REPORT
CONDENSATE STORAGE
AND SUPPLY SYSTEM
FLOW DIAGRAM
FIGURE 11.9-1b SH 1

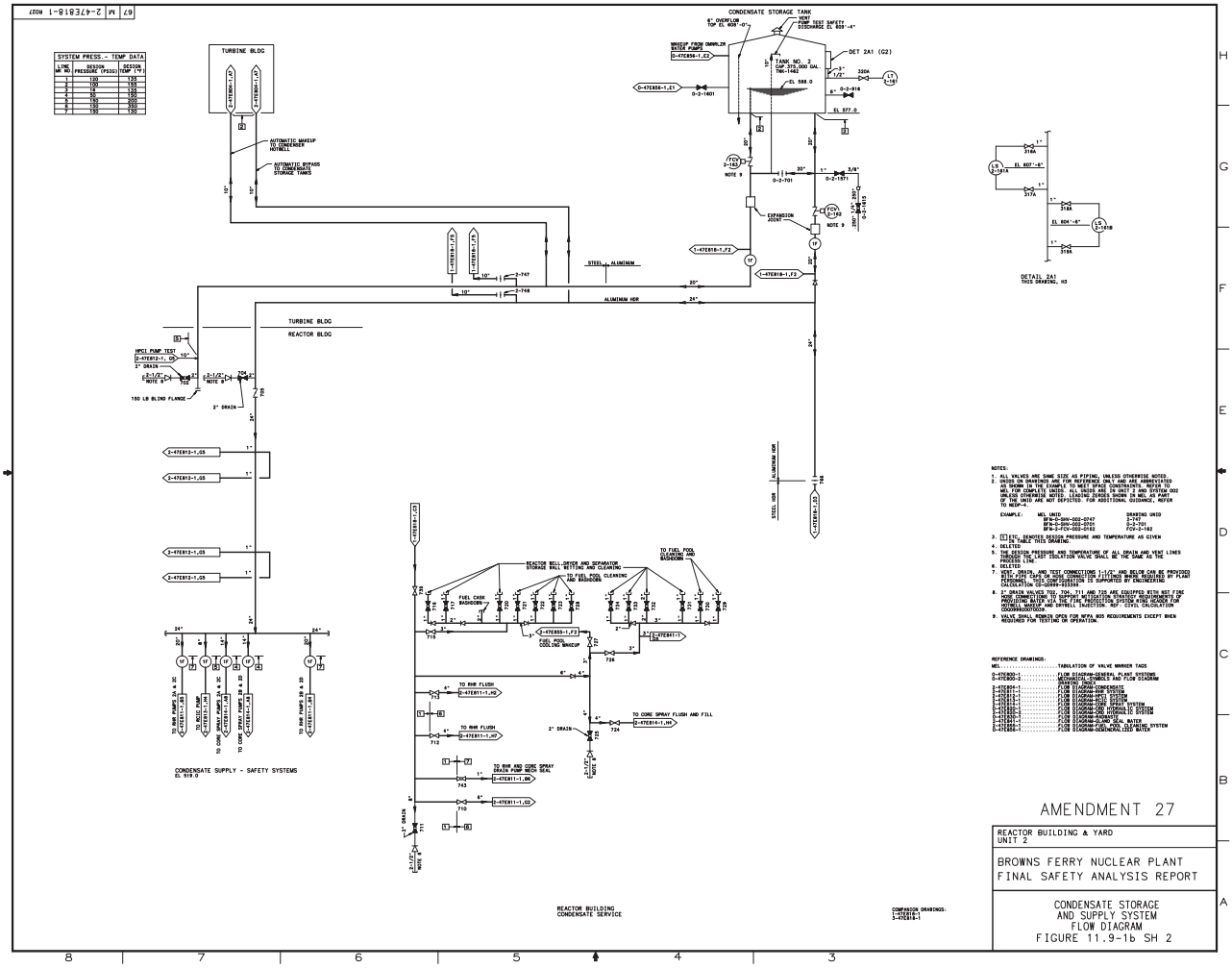
67 M4 2-47E818-1 M027
SYSTEM PRESS. - TEMP DATA
LINE NO. | DESIGN PRESSURE (PSIG) | DESIGN TEMP (°F)
1 | 100 | 135
2 | 100 | 135
3 | 95 | 150
4 | 95 | 150
5 | 150 | 200
6 | 150 | 330
7 | 150 | 130
TURBINE BLDG
CONDENSATE STORAGE TANK
6" OVERFLOW TOP EL 608'-0"
VENT
TEST SAFETY DISCHARGE EL 599'-4"
MAKEUP FROM DEMINLZR WATER PUMPS
0-47E856-1,C2
TANK NO. 2 CAP 375,000 GAL. TNK-1462
EL 588.0
DET 2A1 (G2)
6" 0-2-3116
EL 577.0
0-47E856-1,C1
0-2-1601
AUTOMATIC MAKEUP FROM DEMINERALIZED WATER
AUTOMATIC BYPASS TO CONDENSATE STORAGE TANKS
FCV 2-150
NOTE 9
EXPANSION JOINT
0-2-701
0-2-21971
0-2-3116
1-47E818-1,F2
1-47E818-1,F5
1-47E818-1,F6
STEEL
ALUMINUM
ALUMINUM HDR
TURBINE BLDG
REACTOR BLDG
HPCI PUMP TEST
2-47E812-1, G6
2" DRAIN
NOTE 8
150 LB BLIND FLANGE
0-47E812-1,G5
STEEL HDR
1-47E818-1,G5
TO RHR PUMP 2A & 2C
TO RCIC PUMP
TO CORE SPRAY PUMPS 2A & 2C
TO CORE SPRAY PUMPS 2B & 2D
TO RHR PUMPS 2B & 2D
CONDENSATE SUPPLY - SAFETY SYSTEMS EL 519.0
REACTOR BELL-DRIVER AND SEPARATOR STORAGE PIT SEEPAGE AND CLEANING
TO FUEL POOL CLEANING AND SKIMMER
FUEL CASK WASHDOWN
FUEL POOL COOLING MAKEUP
TO RHR FLUSH
TO CORE SPRAY FLUSH AND FILL
TO RHR AND CORE SPRAY DRAIN POT SEAL
REACTOR BUILDING CONDENSATE SERVICE
DETAIL 2A1
TIES DRAWING, H3
NOTES:
1. ALL VALVES ARE GAGE SIZE AS PIPING, UNLESS OTHERWISE NOTED.
2. ALL VALVES SHOWN ON THIS DRAWING ARE IDENTIFIED AND LOCATED ON DRAWING IN THE EXAMPLE TO MEET SPACE CONSTRAINTS. REFER TO MEL FOR COMPLETE UNITS. ALL UNITS ARE IN UNIT 2 AND SYSTEM 002 UNLESS OTHERWISE NOTED. LINE NO. SHOWN ON MEL AS PART OF THE VALVE ID ARE NOT DEPICTED. FOR ADDITIONAL GUIDANCE, REFER TO NEDP-4.
EXAMPLE: MEL UNID: BFN-0-SHN-002-0747, BFN-0-SHN-002-0151, BFN-2-FCV-002-0163; DRAWING UNID: 2-747, 0-2-701, FCV-2-163
3. LTC, REMOTELY POSITION AND TEMPERATURE AS GIVEN IN TABLE THIS DRAWING.
4. DELETED
5. THE DESIGN PRESSURE AND TEMPERATURE OF ALL DRAIN AND VENT LINES THROUGH THE FIRST ISOLATION VALVE SHALL BE THE SAME AS THE PROCESS LINE.
6. DELETED
7. VENT, DRAIN, AND TEST CONNECTIONS 1-1/4" AND BELOW CAN BE PROVIDED WITH EITHER SOCKET WELD OR SCREWED END CONNECTIONS AT PLANT DISCRETION. SOCKET WELD CONFIGURATION IS SUPPORTED BY ENGINEERING CALCULATION CD-0999-883599.
8. 2" DRAIN VALVES 702, 708, 711 AND 720 ARE EQUIPPED WITH ACT FIRE AND CONFIGURATION TO SUPPORT RESTRICTION TESTING REQUIREMENTS OF SURVEILLANCE INSTRUCTION 0-SI-4.6.F.2.b.(1) AND 0-SI-4.6.F.2.b.(2) FOR RCIC, MAKEUP AND SKYBELL INJECTION. REF. CTRL CALCULATION CDQ0999900700.
9. VALVE SHALL REMAIN OPEN FOR NFPA 805 REQUIREMENTS EXCEPT WHEN REQUIRED FOR TESTING OR OPERATION.
REFERENCE DRAWINGS:
MEL.....TABULATION OF VALVE MANAGER TAGS
0-47E800-1.....FLOW DIAGRAM-GENERAL PLANT SYSTEMS
0-47E800-2.....MECHANICAL SYMBOLS AND FLOW DIAGRAM
1-47E811-1.....FLOW DIAGRAM-CONDENSATE
1-47E811-1.....FLOW DIAGRAM-RHR SYSTEM
1-47E811-1.....FLOW DIAGRAM-CORE SPRAY
1-47E811-1.....FLOW DIAGRAM-RCIC SYSTEM
1-47E811-1.....FLOW DIAGRAM-REACTOR HYDRAULIC SYSTEM
1-47E811-1.....FLOW DIAGRAM-CONTROL ROD HYDRAULIC SYSTEM
1-47E811-1.....FLOW DIAGRAM-SLUDGE, ETC.
1-47E811-1.....FLOW DIAGRAM-DEMINERALIZED WATER
1-47E811-1.....FLOW DIAGRAM-RADWASTE, WASH CLOTHING SYSTEM
1-47E811-1.....FLOW DIAGRAM-CHEMICAL/FEED WATER
AMENDMENT 27
REACTOR BUILDING & YARD UNIT 2
BROWNS FERRY NUCLEAR PLANT FINAL SAFETY ANALYSIS REPORT
CONDENSATE STORAGE AND SUPPLY SYSTEM FLOW DIAGRAM FIGURE 11.9-1b SH 2
COMPANION DRAWINGS: 1-47E818-1 3-47E818-1
8 7 6 5 4 3
H G F E D C B A

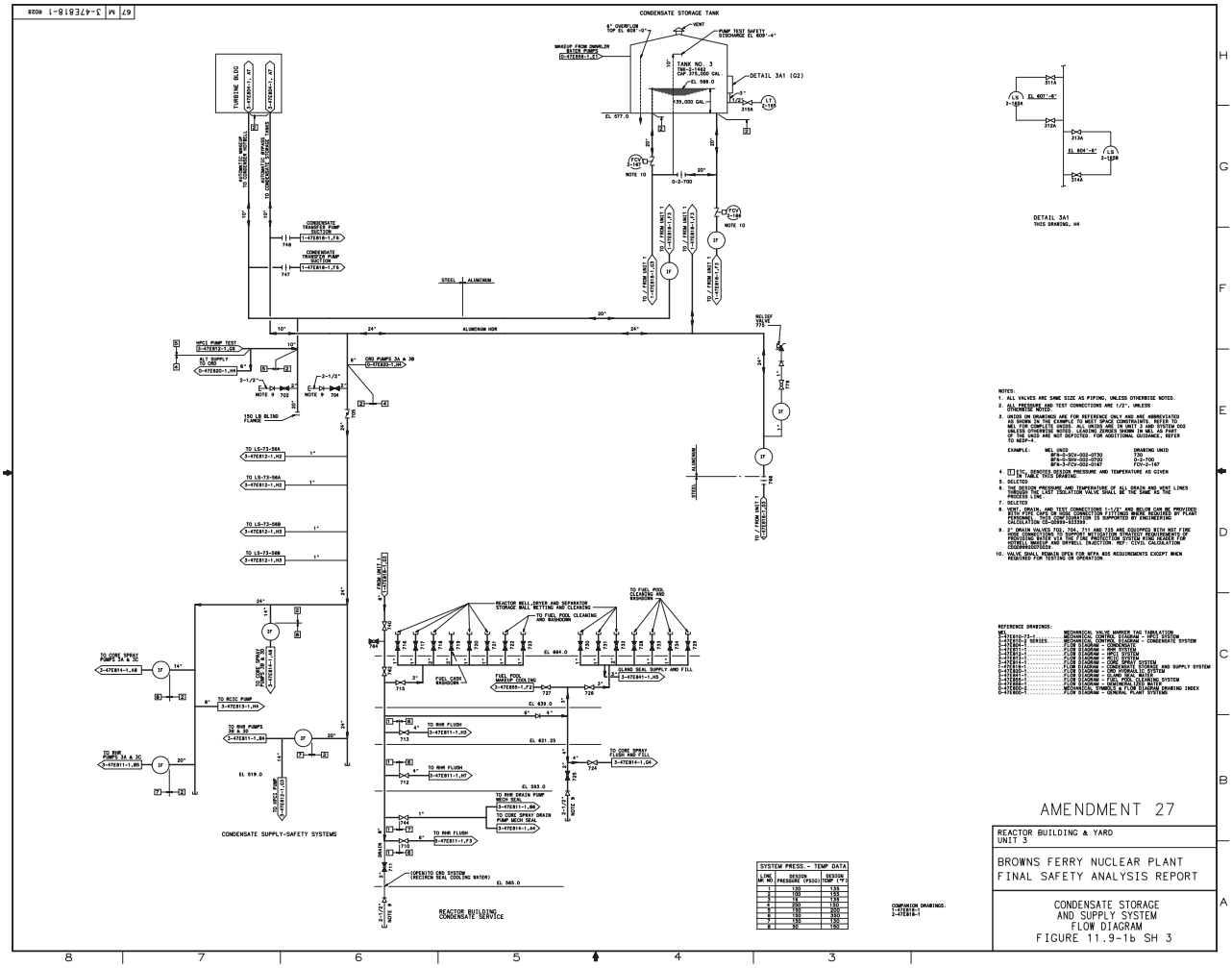


NOTES:
1. ALL VALVES ARE SAME SIZE AS PIPING, UNLESS OTHERWISE NOTED.
2. ALL PRESSURE AND TEST CONNECTIONS ARE 1/2", UNLESS OTHERWISE NOTED.
3. UNIDS ON DRAWINGS ARE FOR REFERENCE ONLY AND ARE ABBREVIATED AS SHOWN IN THE EXAMPLE. ALL UNIDS ARE CONSTRUCTED AS SHOWN IN THE EXAMPLE. THE UNIDS ON ALL LISTING ZONES FOR A GIVEN SYSTEM OCC UNLESS OTHERWISE NOTED. LISTING ZONES SHOWN IN ARE AS PART OF THE UNIDS ARE NOT DEPICTED. FOR ADDITIONAL GUIDANCE, REFER TO NEDP-1.

| EXAMPLE: | WEL UNID | DRAWING UNID |
|---|---|---|
| | BFN-2-SCV-003-0730 | 2-730 |
| | BFN-2-SCV-003-0703 | SCV-3-700 |
| | BFN-3-FCV-003-0167 | FCV-3-167 |

4. [1] ISTS, SERVICES MISSION PROGRAMS AND TEMPERATURE AS GIVEN IN TABLE THIS DRAWING.
5. DELETED
6. THIS CONTROL VALVE WILL BE INOPERATIVE OF ALL DRAIN AND VENT LINES ASSOCIATED WITH THIS CONDITION FITTING BEING INSTALLED BY PLANT PERSONNEL. THIS CONFIGURATION IS SUPPORTED BY ENGINEERING CALCULATION CD-0999-823393
7. DELETED
8. VENT, DRAIN, AND TEST CONNECTIONS 1-1/2" AND BELOW CAN BE EMPLOYED AS THE FIRST SEAL IN SEAL CONDITION FITTING BEING INSTALLED BY PLANT PERSONNEL. THIS CONFIGURATION IS SUPPORTED BY ENGINEERING CALCULATION CD-0999-823393
9. 2" DRAIN VALVES 712, 734, 711 AND 710 ARE EQUIPPED WITH HOT FIRE PROOFING MATERIAL AND ARE CLASSIFIED AS "ESSENTIAL" FOR HOT FIRE PROOFING WATER AT THE FIRE PROTECTION SYSTEM ATWS REVIEW FOR HOTWELL MAKEUP AND DRYWELL INJECTION. REF.: CIVIL CALCULATION CD-0999-823393
10. VALVE SHALL REMAIN OPEN FOR NFPA 805 REQUIREMENTS EXCEPT WHEN REQUIRED FOR TESTING OR OPERATION.

REFERENCE DRAWINGS:

| WEL | |
|---|---|
| 1-47E610-1-2 | MECHANICAL VALVE MARKER TAG TABULATION |
| 1-47E610-1 SERIES | MECHANICAL CONTROL DIAGRAM - CONDENSATE SYSTEM |
| 1-47E651-1 | MECHANICAL CONTROL DIAGRAM - CONDENSATE SYSTEM |
| 1-47E811-1 | FLOW DIAGRAM - CONDENSATE |
| 1-47E812-1 | FLOW DIAGRAM - MPCT SYSTEM |
| 1-47E813-1 | FLOW DIAGRAM - RCIC SYSTEM |
| 1-47E814-1 | FLOW DIAGRAM - CSS SYSTEM |
| 1-47E815-1 | FLOW DIAGRAM - CONDENSATE SYSTEM |
| 1-47E816-1 | FLOW DIAGRAM - CONDENSATE STORAGE AND SUPPLY SYSTEM |
| 1-47E817-1 | FLOW DIAGRAM - CW OPTIONAL TO SYSTEM |
| 1-47E818-1 | FLOW DIAGRAM - CW OPTIONAL TO SYSTEM |
| 1-47E840-1 | FLOW DIAGRAM - FUEL POOL CLEANING SYSTEM |
| 1-47E841-1 | FLOW DIAGRAM - FUEL POOL COOLING SYSTEM |
| 1-47E600-1 | MECHANICAL FLOW DIAGRAM - SYSTEM DRAWING INDEX |
| 1-47E600-1 | FLOW DIAGRAM - GENERAL PLANT SYSTEMS |

| SYSTEM PRESS. - TEMP DATA | | |
|---|---|---|
| LINE NO. | DESIGN PRESSURE (PSIG) | DESIGN TEMP (°F) |
| 1 | 150 | 135 |
| 2 | 150 | 155 |
| 3 | 65 | 135 |
| 4 | 450 | 550 |
| 5 | 150 | 550 |
| 6 | 150 | 550 |
| 7 | 150 | 150 |
| 8 | 50 | 150 |

COMPANION DRAWINGS:
1-47E610-1
2-47E610-1

AMENDMENT 27

REACTOR BUILDING & YARD
UNIT 3

BROWNS FERRY NUCLEAR PLANT
FINAL SAFETY ANALYSIS REPORT

CONDENSATE STORAGE
AND SUPPLY SYSTEM
FLOW DIAGRAM
FIGURE 11.9-1b SH 3

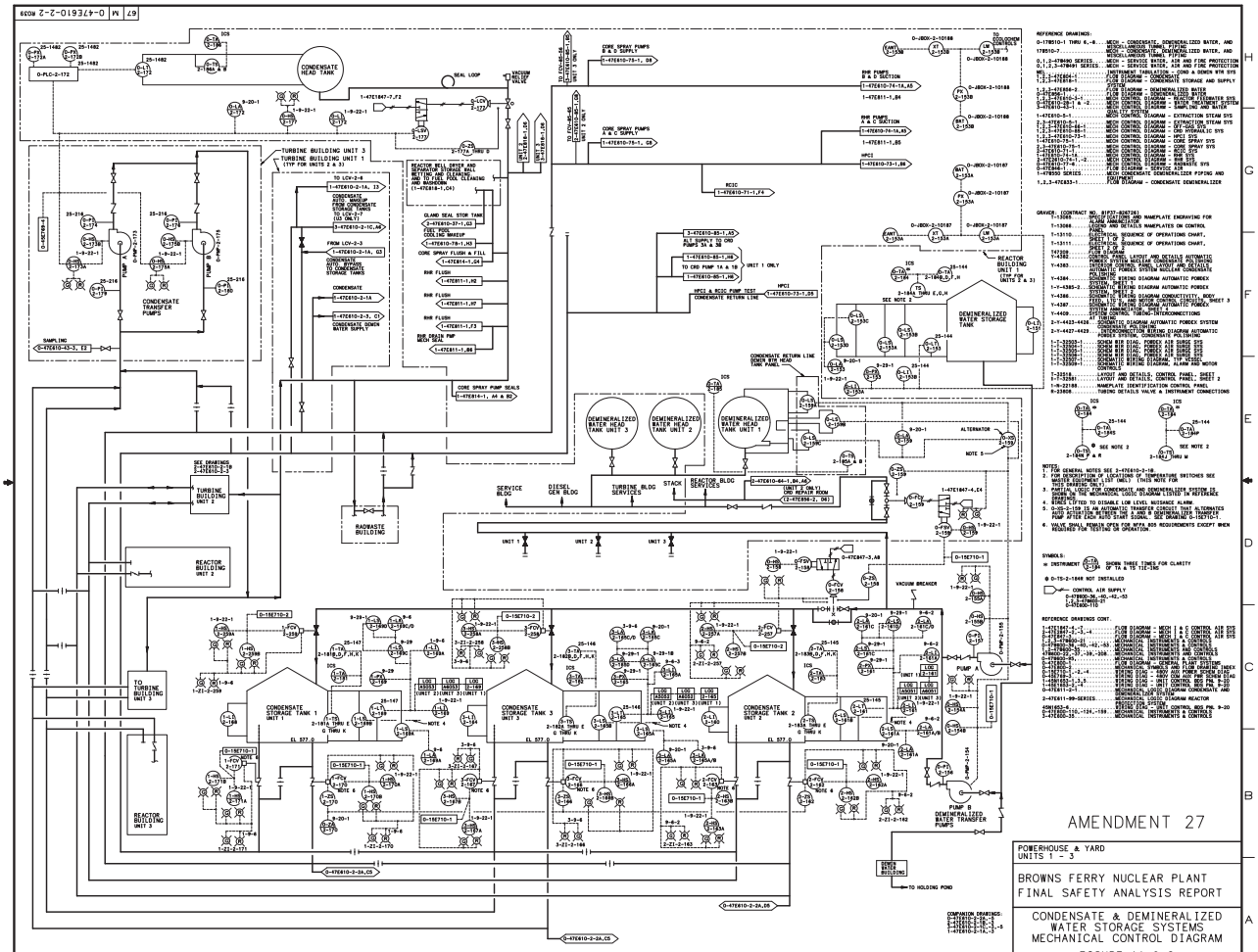
CONDENSATE HEAD TANK
CONDENSATE TRANSFER PUMPS
TURBINE BUILDING UNIT 3
TURBINE BUILDING UNIT 1
DEMINERALIZED WATER STORAGE TANK
DEMINERALIZED WATER HEAD TANK UNIT 3
DEMINERALIZED WATER HEAD TANK UNIT 2
DEMINERALIZED WATER HEAD TANK UNIT 1
TURBINE BUILDING UNIT 2
RADWASTE BUILDING
REACTOR BUILDING UNIT 2
TO TURBINE BUILDING UNIT 3
REACTOR BUILDING UNIT 3
CONDENSATE STORAGE TANK 1 UNIT 1
CONDENSATE STORAGE TANK 3 UNIT 3
CONDENSATE STORAGE TANK 2 UNIT 2
PUMP B DEMINERALIZED WATER TRANSFER PUMPS
TO HOLDING POND
REFERENCE DRAWINGS:
SYMBOLS:
REFERENCE DRAWINGS CONT.
AMENDMENT 27
POWERHOUSE & YARD
UNITS 1 - 3
BROWNS FERRY NUCLEAR PLANT
FINAL SAFETY ANALYSIS REPORT
CONDENSATE & DEMINERALIZED
WATER STORAGE SYSTEMS
MECHANICAL CONTROL DIAGRAM
FIGURE 11.9-2

Figure 11.9-3
(Deleted by Amendment 22)

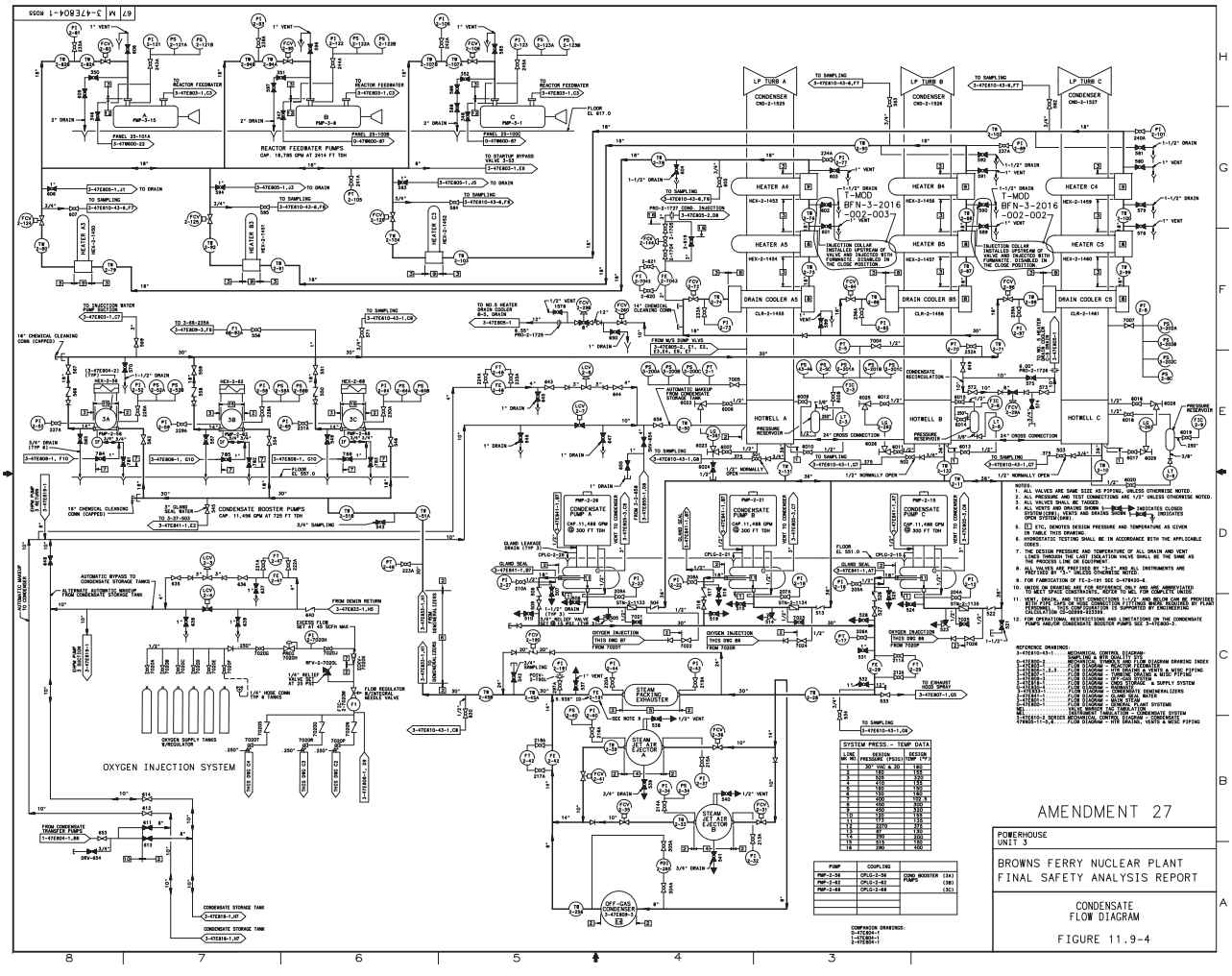
REACTOR FEEDWATER PUMPS
CAP. 18,785 GPM AT 2414 FT TDH
CONDENSATE BOOSTER PUMPS
CAP. 11,456 GPM AT 725 FT TDH
OXYGEN INJECTION SYSTEM
CONDENSATE PUMP A
CONDENSATE PUMP B
CONDENSATE PUMP C
CAP 11,488 GPM @ 300 FT TDH
HOTWELL A
HOTWELL B
HOTWELL C
HEATER A3
HEATER A4
HEATER A5
HEATER B3
HEATER B4
HEATER B5
HEATER C3
HEATER C4
HEATER C5
DRAIN COOLER A5
DRAIN COOLER B5
DRAIN COOLER C5
LP TURB A
LP TURB B
LP TURB C
CONDENSER CND-2-1525
CONDENSER CND-2-1526
CONDENSER CND-2-1527
STEAM PACKING EXHAUSTER
STEAM JET AIR EJECTOR A
STEAM JET AIR EJECTOR B
OFF-GAS CONDENSER
AUTOMATIC MAKEUP FROM CONDENSATE STORAGE TANK
CONDENSATE RECIRCULATION
INJECTION COLLAR INSTALLED UPSTREAM OF VALVE AND WELDED TO PIPE WHEN VALVE IS IN THE CLOSE POSITION
T-MOD BFN-3-2016 -002-003-7
T-MOD BFN-3-2016 -002-002-7
FLOOR EL 617.0
FLOOR EL 551.0
FLOOR EL 551.0
SYSTEM PRESS - TEMP DATA
LINE NO.
REGEN PRESSURE (PSIG)
REGEN TEMP (°F)
1 30" VAC & 30 180
2 165 155
3 410 170
4 410 180
5 165 155
6 450 180
7 450 180
8 450 155
9 450 330
10 165 155
11 2270 330
12 2270 330
13 450 330
14 315 155
15 280 450
PUMP COUPLING
PMP-2-58 CPLG-2-58 COND BOOSTER (3A)
PMP-2-62 CPLG-2-62 (3B)
PMP-2-68 CPLG-2-68 (3C)
AMENDMENT 27
POWERHOUSE UNIT 3
BROWNS FERRY NUCLEAR PLANT
FINAL SAFETY ANALYSIS REPORT
CONDENSATE FLOW DIAGRAM
FIGURE 11.9-4

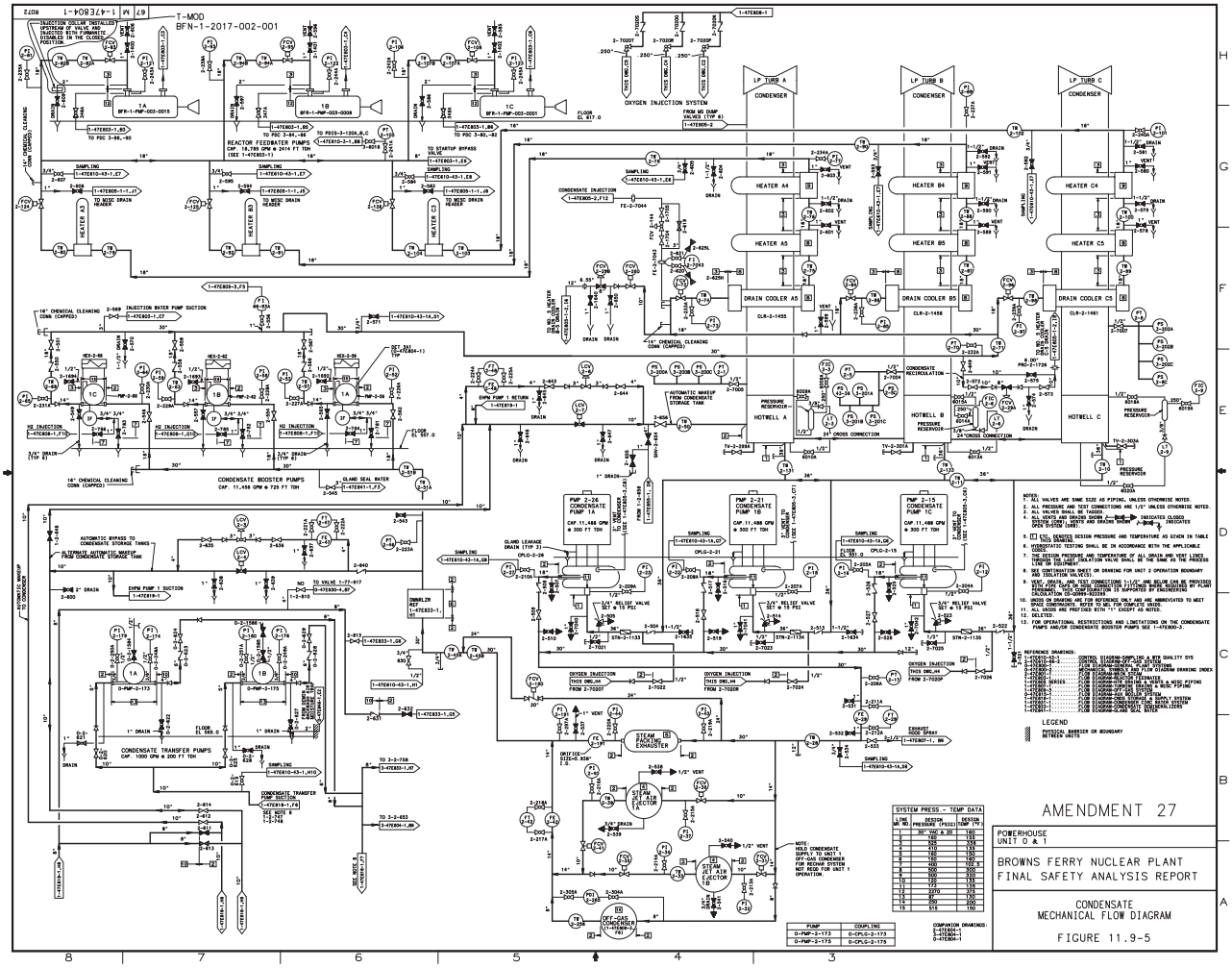

T-MOD
BFN-1-2017-002-001
REACTOR FEEDWATER PUMPS
CONDENSATE BOOSTER PUMPS
CONDENSATE TRANSFER PUMPS
OXYGEN INJECTION SYSTEM
LP TURB A CONDENSER
LP TURB B CONDENSER
LP TURB C CONDENSER
HEATER A4
HEATER B4
HEATER C4
HEATER A5
HEATER B5
HEATER C5
DRAIN COOLER A5
DRAIN COOLER B5
DRAIN COOLER C5
HOTWELL A
HOTWELL B
HOTWELL C
PMP 2-26 CONDENSATE PUMP 1A
PMP 2-21 CONDENSATE PUMP 1B
PMP 2-15 CONDENSATE PUMP 1C
STEAM PACKING EXHAUSTER
STEAM JET AIR EJECTOR 1A
STEAM JET AIR EJECTOR 1B
OFF-GAS CONDENSER
LEGEND
SYSTEM PRESS. - TEMP DATA
AMENDMENT 27
POWERHOUSE
UNIT 0 & 1
BROWNS FERRY NUCLEAR PLANT
FINAL SAFETY ANALYSIS REPORT
CONDENSATE
MECHANICAL FLOW DIAGRAM
FIGURE 11.9-5