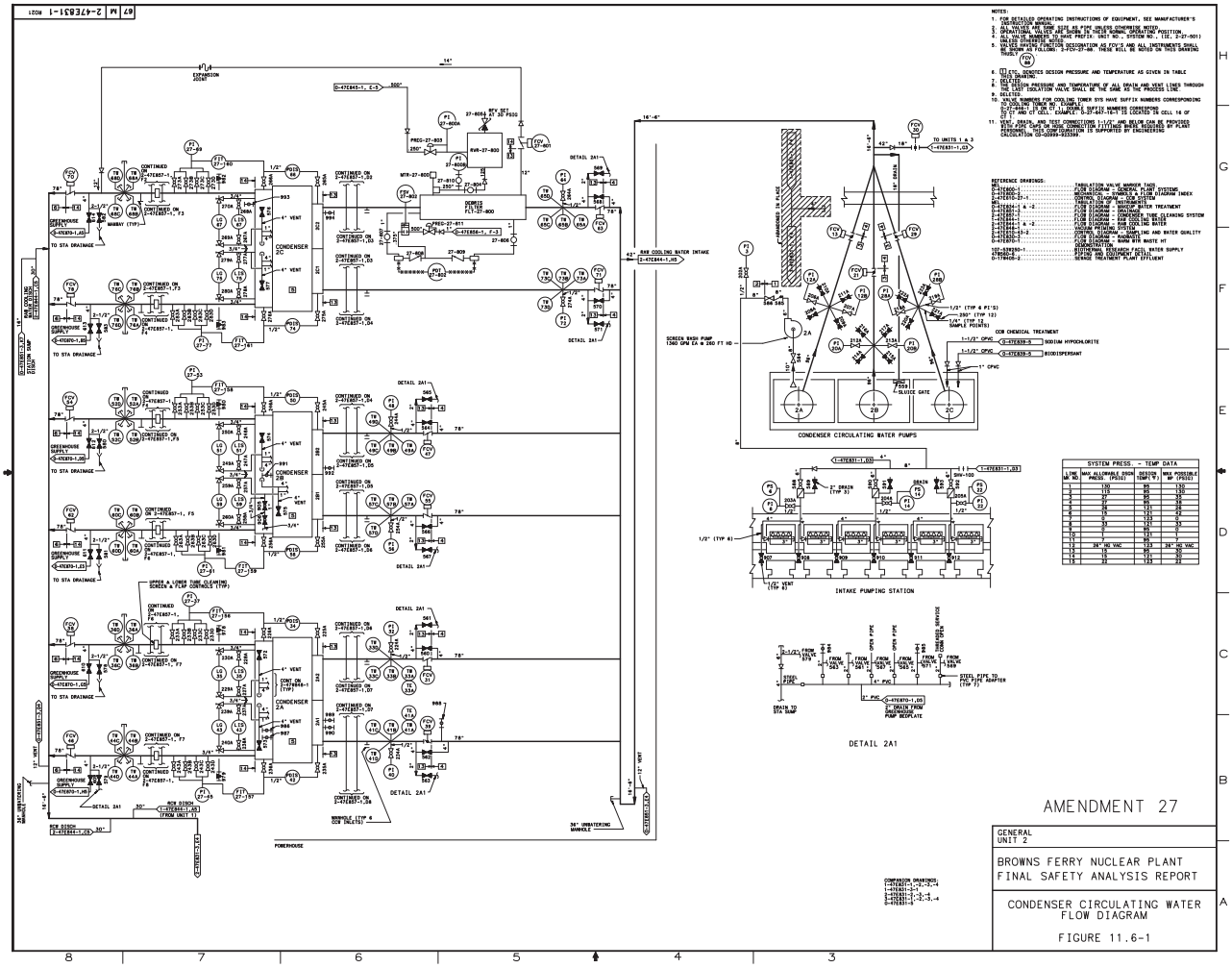
67 N4 2-47E831-1 R021
NOTES:
1. FOR DETAILED OPERATING INSTRUCTIONS OF EQUIPMENT, SEE MANUFACTURER'S INSTRUCTION MANUAL.
2. ALL VALVES ARE 6000 SIZE AS PIPE UNLESS OTHERWISE NOTED.
3. OPERATORS: VALVES ARE SHOWN IN NEAR NORMAL OPERATING POSITION.
4. VALVE IDENTIFICATION: VALVE PREFIX: UNIT NO. - SYSTEM NO. (EX. 2-27-001) UNLESS OTHERWISE NOTED.
5. VALVE SHAPE FUNCTION DESIGNATION AS FCV'S AND ALL INSTRUMENTS SHALL BE IDENTIFIED AS FOLLOWS: 3-FCV-27-98. THESE WILL BE NOTED ON THIS DRAWING THUS: FCV
6. (1) ELEV. DENOTES DESIGN PRESSURE AND TEMPERATURE AS GIVEN IN TABLE OF PIPING DESIGN.
7. DELETED.
8. THE DESIGN PRESSURE AND TEMPERATURE OF ALL DRAIN AND VENT LINES THROUGH THE FIRST ISOLATION VALVE SHALL BE THE SAME AS THE PROCESS LINE.
9. DELETED.
10. VALVE NUMBERS FOR COOLING TOWER SYS HAVE SUFFIX NUMBERS CORRESPONDING TO CELL NUMBER IN CT. (EXAMPLE: 2-FCV-67-151-1 IS CONTROLLED BY 2-LS-67-151-1 IN CT CELL. EXAMPLE: 2-27-647-1&2 IS LOCATED IN CELL 1& OF CT.)
11. STEP, DRAIN, AND TEST CONNECTIONS 1/2" AND BELOW CAN BE PROVIDED WITH PIPE CAPS IN LIEU OF CONNECTION FITTINGS WHERE REQUIRED BY PLANT OPERATIONAL CONDITIONS. THIS CAN BE SUPPORTED BY ENGINEERING CALCULATION CD-Q0999-9200881.
REFERENCE DRAWINGS:
TABULATION VALVE NUMBER TAGS
FLOW DIAGRAM - GENERAL PLANT SYSTEMS
MECHANICAL EQUIPMENT LIST & SYSTEM DIAGRAM INDEX
FLOW DIAGRAM - CONDENSATE SYSTEM
TURBINE BLDG. ARRANGEMENTS
FLOW DIAGRAM - MAKEUP WATER TREATMENT
FLOW DIAGRAM - CONDENSATE
FLOW DIAGRAM - CONDENSER TUBE CLEANING SYSTEM
FLOW DIAGRAM - RAW COOLING WATER
FLOW DIAGRAM - RAW COOLING WATER
ZONE DRAWING - TURBINE BUILDING
ZONE DRAWING - AUXILIARY BLDG AND WATER QUALITY
FLOW DIAGRAM - RADWASTE
FLOW DIAGRAM - RWBM RTB WASTE HT
BIOTHERMAL RESEARCH FACIL WATER SUPPLY
SEWAGE TREATMENT PLANT (STP)
SEWAGE TREATMENT PLANT EFFLUENT
CONDENSER CIRCULATING WATER PUMPS
INTAKE PUMPING STATION
DETAIL 2A1
SYSTEM PRESS. - TEMP DATA
AMENDMENT 27
GENERAL
UNIT 2
BROWNS FERRY NUCLEAR PLANT
FINAL SAFETY ANALYSIS REPORT
CONDENSER CIRCULATING WATER FLOW DIAGRAM
FIGURE 11.6-1

SECURITY RELATED INFORMATION
FIGURE WITHHELD UNDER 10 CFR 2.390

POWERHOUSE
UNIT 1

BROWNS FERRY NUCLEAR PLANT
FINAL SAFETY ANALYSIS REPORT

CONDENSER CIRCULATING WATER
FLOW DIAGRAM
FIGURE 11.6-2

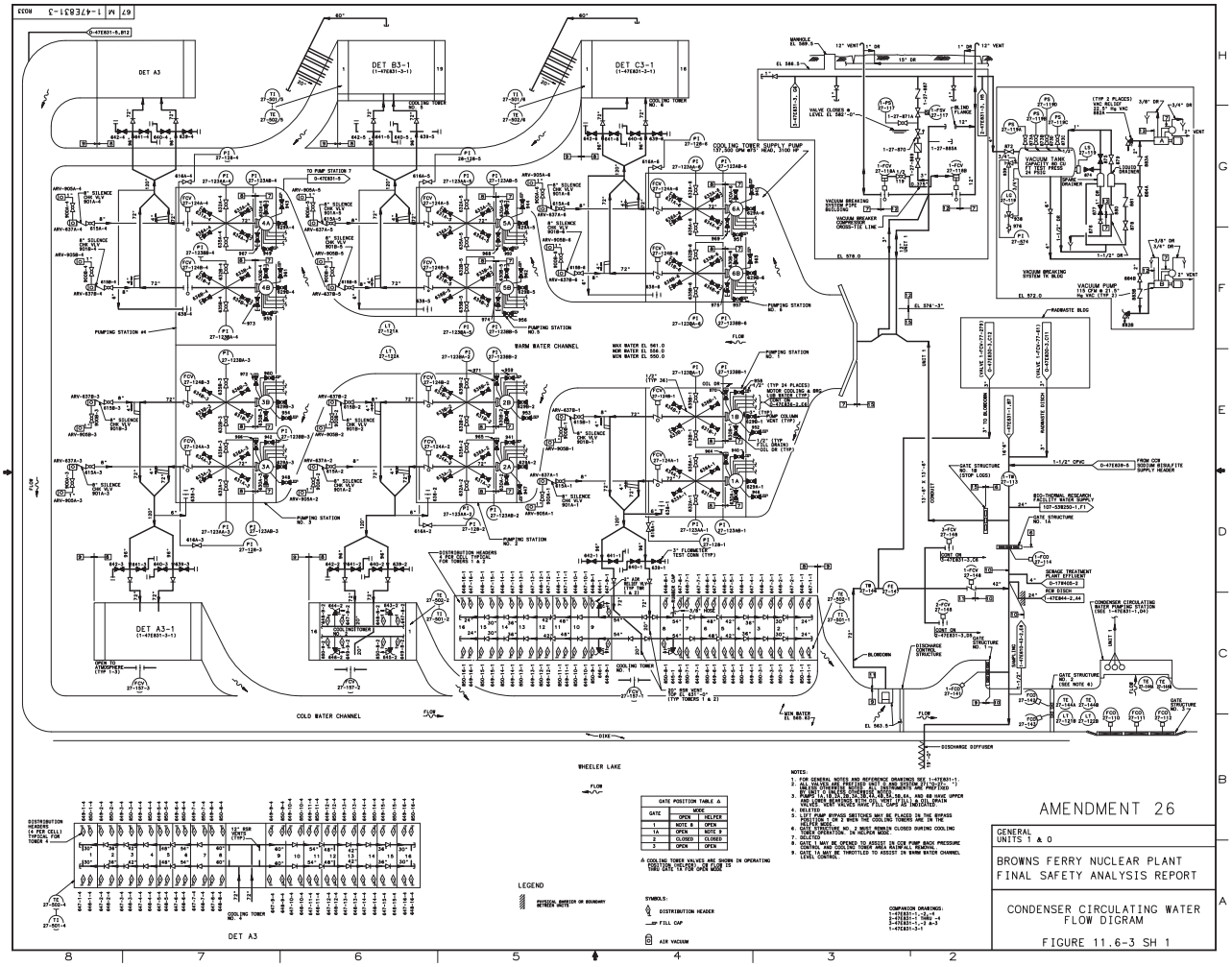
DET A3
DET B3-1
(1-47E831-3-1)
DET C3-1
(1-47E831-3-1)
DET A3-1
(1-47E831-3-1)
COOLING TOWER NO. 1
COOLING TOWER NO. 2
COOLING TOWER NO. 3
COOLING TOWER NO. 4
COOLING TOWER SUPPLY PUMP (97,500 GPM WITH 7 HEAD, 3100 HP
PUMPING STATION NO. 1
PUMPING STATION NO. 2
PUMPING STATION NO. 3
PUMPING STATION NO. 4
PUMPING STATION NO. 5
WARM WATER CHANNEL
COLD WATER CHANNEL
MAX WATER EL 561.0
NOR WATER EL 556.0
MIN WATER EL 550.0
VACUUM BREAKING SYSTEM TO BLDG
VACUUM PUMP 1/2 GPM @ 21.5" Hg AND 1750 RPM
VACUUM TANK CAPACITY 80 GAL AT TEST HEAD 24 FEET
VACUUM BREAKER CROSS-TIE LINE
RADWASTE BLDG
RADWASTE SYSTEM
SEWAGE TREATMENT PLANT EFFLUENT
CONDENSER CIRCULATING WATER PUMPING STATION (SEE 1-47E831-1,2&7)
DISCHARGE CONTROL STRUCTURE
DISCHARGE DIFFUSER
BLOWDOWN
WHEELER LAKE
DIKE
MIN WATER EL 600.63
EL 586.5
EL 579.0
EL 574'-3"
EL 572.0
EL 560.5
GATE POSITION TABLE A
GATE
MODE
OPEN
HELPER
1
NOTE B
OPEN
1A
OPEN
NOTE 9
2
CLOSED
CLOSED
3
OPEN
OPEN
A COOLING TOWER VALVES ARE SHOWN IN OPERATING POSITION. TWO-STEP GATE VALVE IS SHOWN IN FULL OPEN POSITION.
LEGEND
PHYSICAL BARRIER OR BOUNDARY BETWEEN UNITS
SYMBOLS:
DISTRIBUTION HEADER
FILL CAP
AIR VACUUM
NOTES:
1. FOR GENERAL NOTES AND REFERENCE DRAWINGS SEE 1-47E831-1.
2. ALL 10" DIA AND SMALLER SAFETY CLASS SYSTEM PIPING IS SEISMICALLY SUPPORTED AND RESTRAINED AS REQUIRED.
3. ALL PIPING AND EQUIPMENT WITHIN 10 FT. OF THE TOP OF THE DIKE AND ALL EQUIPMENT WITHIN 50 FEET OF THE DIKE SHALL BE SEISMICALLY RESTRAINED WITH ALL BOLTS IN A FULL SET OF HOLES.
4. DELETED
5. THE BYPASS PUMP BYPASS SWITCHES MAY BE PLACED IN THE BYPASS POSITION IF ONE OF 2 WHEN THE COOLING TOWERS ARE IN THE GATE STRUCTURE.
6. GATE STRUCTURE NO. 2 MUST REMAIN CLOSED DURING COOLING TOWER OPERATION IN HELPER MODE.
7. DELETED
8. GATE 1A MAY BE OPENED TO ASSIST IN CCW PUMP BACK PRESSURE CONTROL AND COOLING TOWER ANTI-ROLLOVER HEATING.
9. GATE 1A MAY BE THROTTLED TO ASSIST IN WARM WATER CHANNEL LEVEL CONTROL.
COMPANION DRAWINGS:
1-47E831-1,2,&4
1-47E831-3, TUBE 4
1-47E831-5 & 6
1-47E831-7-1
AMENDMENT 26
GENERAL
UNITS 1 & 0
BROWNS FERRY NUCLEAR PLANT
FINAL SAFETY ANALYSIS REPORT
CONDENSER CIRCULATING WATER
FLOW DIGRAM
FIGURE 11.6-3 SH 1

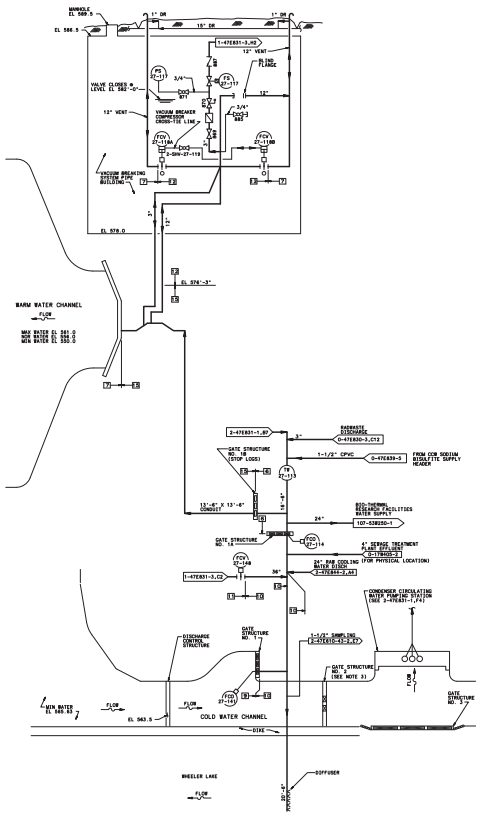

NOTES:

1. FOR GENERAL NOTES AND REFERENCE DRAWINGS SEE 2-47E831-1.
2. ALL VALVES ARE PROVIDED 2-20" UNLESS OTHERWISE NOTED. ALL INSTRUMENTS ARE PROVIDED 1" UNLESS OTHERWISE NOTED.
3. GATE STRUCTURE NO. 2 MUST REMAIN CLOSED DURING COOLING TOWER OPERATION. IN HELPER MODE.
4. FOR GATE POSITION, SEE GATE POSITION TABLE SHOWN ON 1-47E831-3.

COMPANION DRAWINGS:

1-47E831-1,-2,-3,-4
1-47E831-3-1
2-47E831-1,-2,-4
3-47E831-1 THRU 4

AMENDMENT 26

GENERAL
UNIT 2

BROWNS FERRY NUCLEAR PLANT
FINAL SAFETY ANALYSIS REPORT

CONDENSER CIRCULATING WATER FLOW DIAGRAM

FIGURE 11.6-3 SH 2

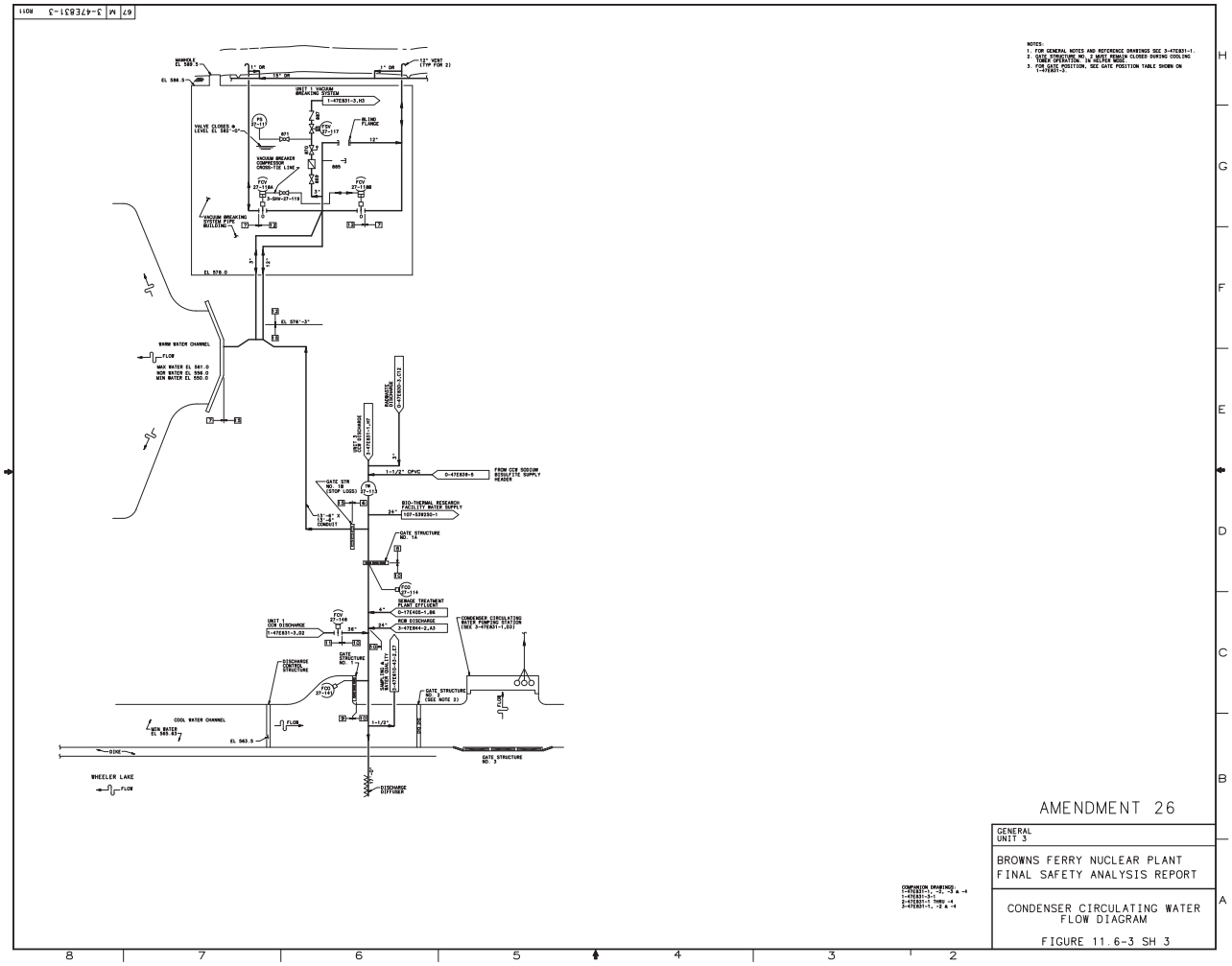

AMENDMENT 26

GENERAL
UNIT 3

BROWNS FERRY NUCLEAR PLANT
FINAL SAFETY ANALYSIS REPORT

CONDENSER CIRCULATING WATER FLOW DIAGRAM

FIGURE 11.6-3 SH 3

SECURITY RELATED INFORMATION
FIGURE WITHHELD UNDER 10 CFR 2.390

POWERHOUSE
UNIT 2

BROWNS FERRY NUCLEAR PLANT
FINAL SAFETY ANALYSIS REPORT

CONDENSER CIRCULATING WATER
FLOW DIAGRAM

FIGURE 11.6-3 SH 4

SECURITY RELATED INFORMATION
FIGURE WITHHELD UNDER 10 CFR 2.390

POWERHOUSE
UNIT 3

BROWNS FERRY NUCLEAR PLANT
FINAL SAFETY ANALYSIS REPORT

CONDENSER CIRCULATING WATER
FLOW DIAGRAM

FIGURE 11.6-3 SH 5

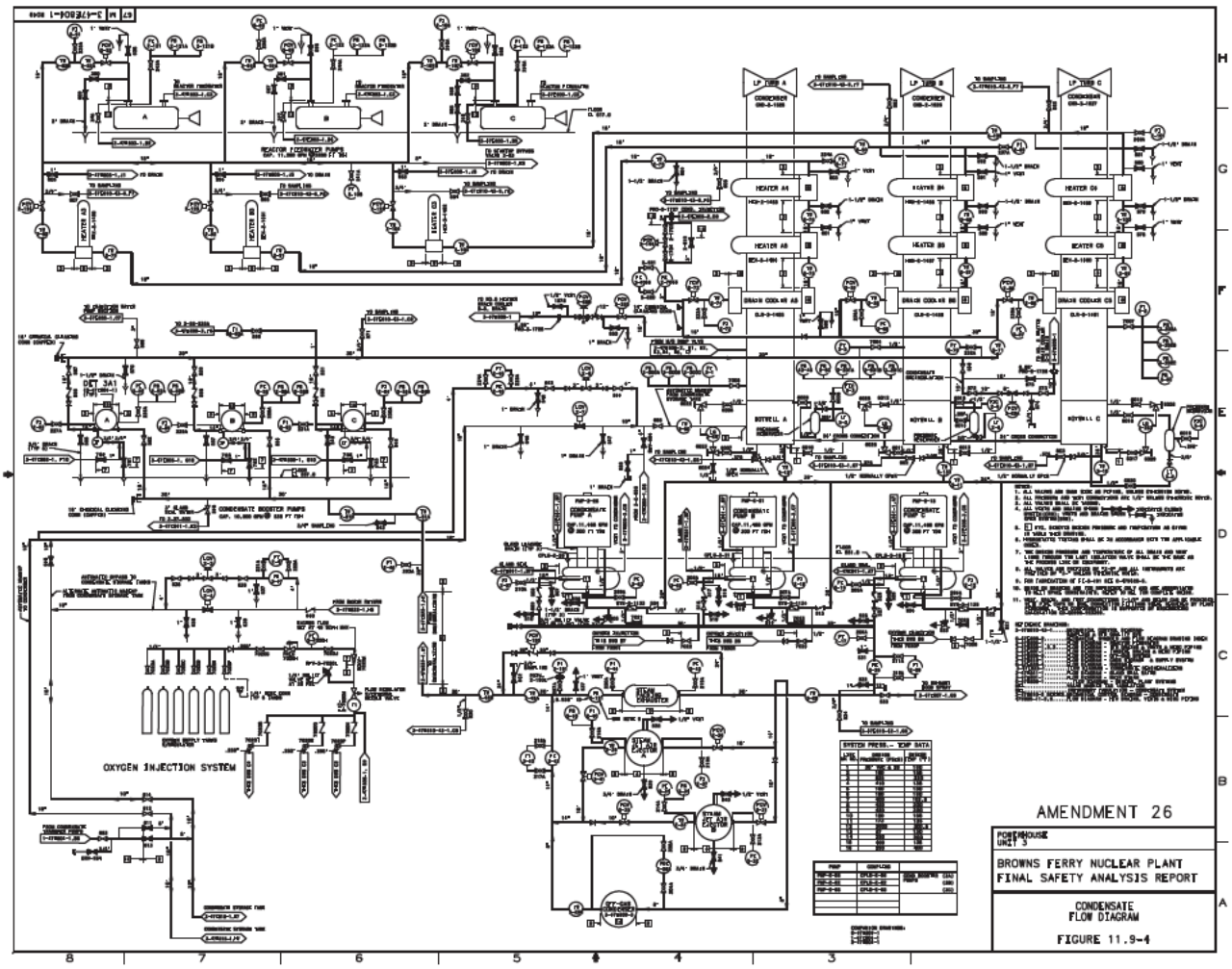
OXYGEN INJECTION SYSTEM
AMENDMENT 26
POWERHOUSE UNIT 3
BROWNS FERRY NUCLEAR PLANT
FINAL SAFETY ANALYSIS REPORT
CONDENSATE FLOW DIAGRAM
FIGURE 11.9-4

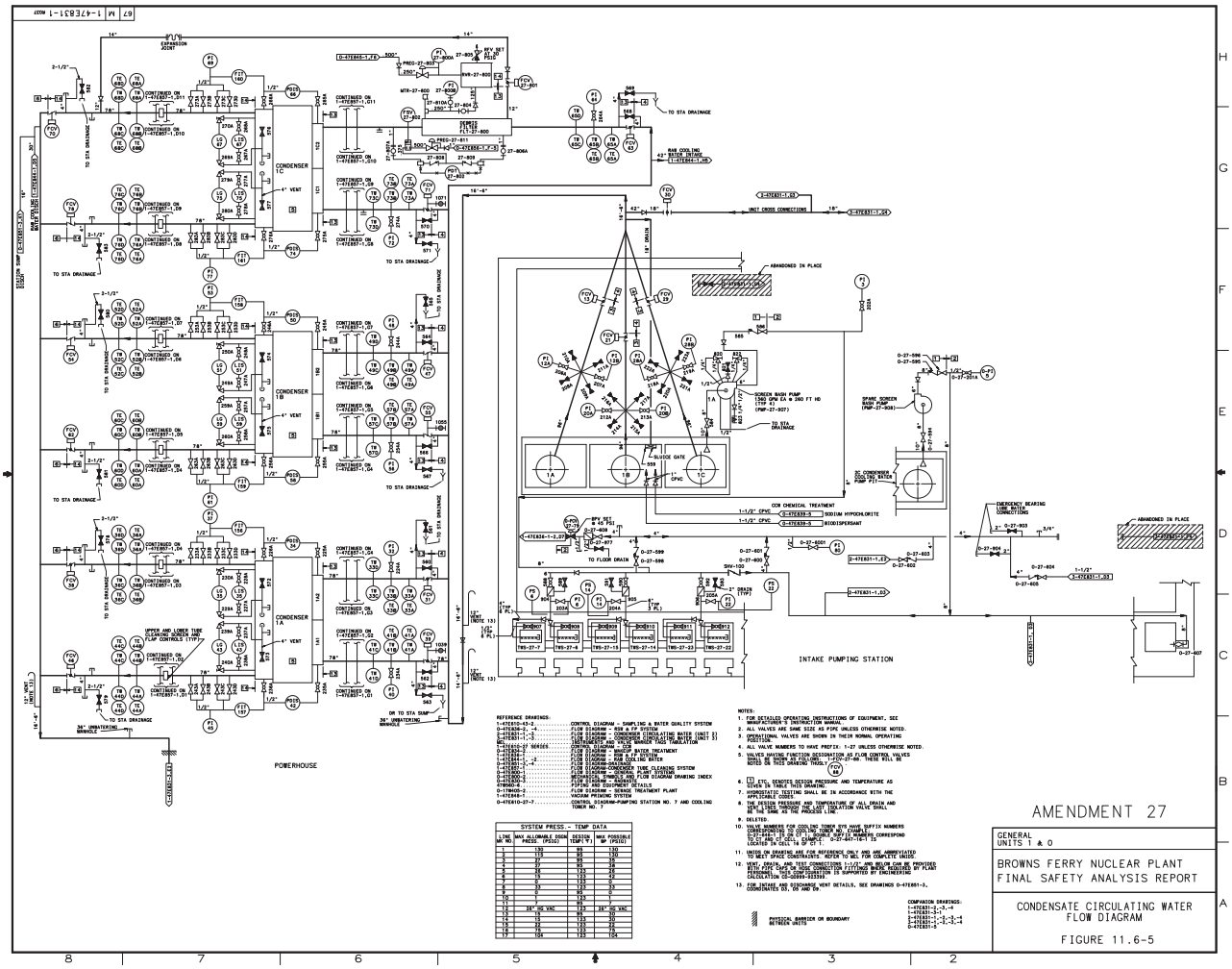
POWERHOUSE
INTAKE PUMPING STATION
CONDENSER 1C
CONDENSER 1B
CONDENSER 1A
AMENDMENT 27
GENERAL
UNITS 1 & 0
BROWNS FERRY NUCLEAR PLANT
FINAL SAFETY ANALYSIS REPORT
CONDENSATE CIRCULATING WATER
FLOW DIAGRAM
FIGURE 11.6-5

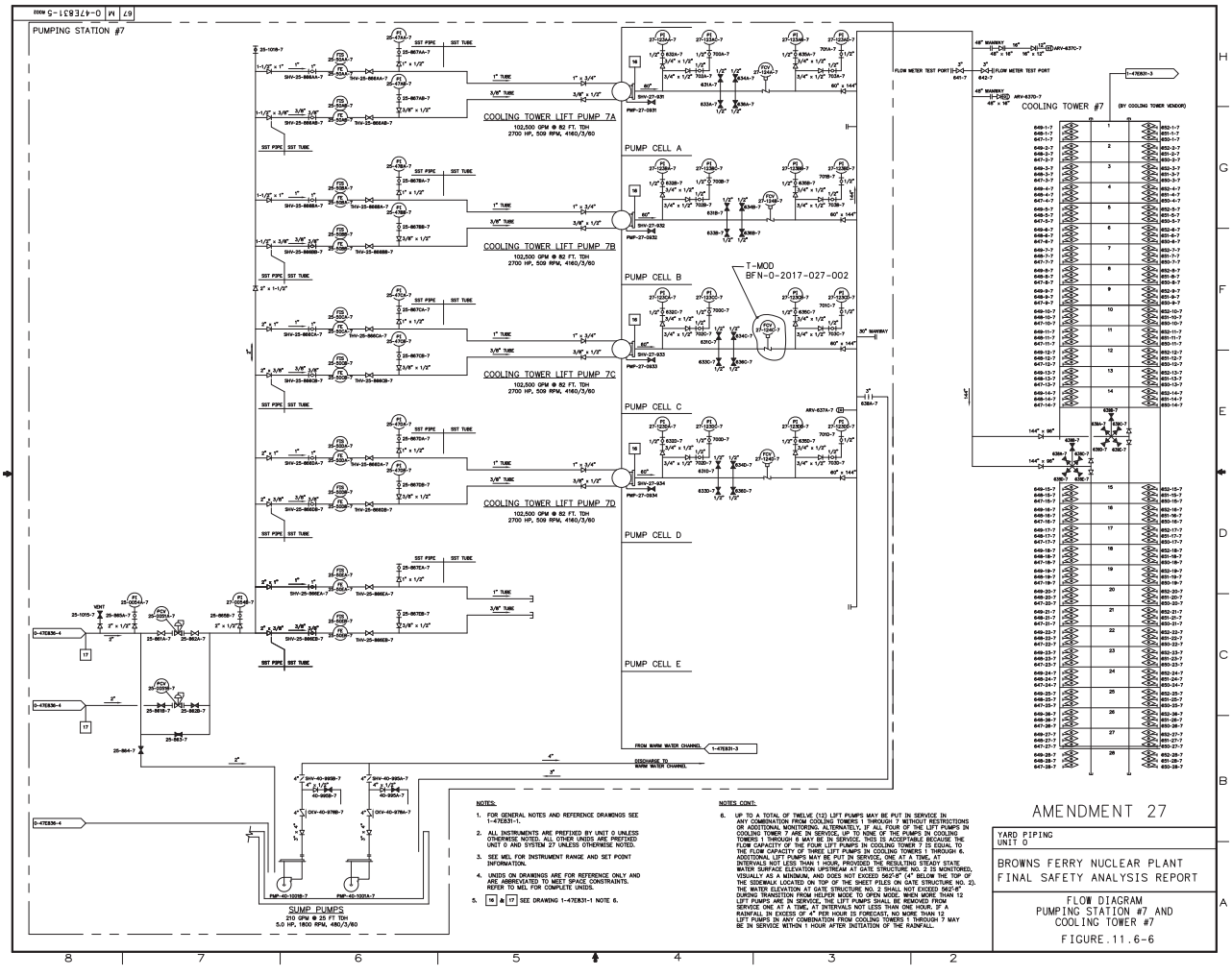

AMENDMENT 27

YARD PIPING
UNIT 0

BROWNS FERRY NUCLEAR PLANT
FINAL SAFETY ANALYSIS REPORT

FLOW DIAGRAM
PUMPING STATION #7 AND
COOLING TOWER #7

FIGURE.11.6-6