ACCELERATED DISTRIBUTION DEMONSTRATION SYSTEM

REGULATORY INFORMATION DISTRIBUTION SYSTEM (RIDS)

ACCESSION NBR:9210280033 DOC.DATE: 92/10/09 NOTARIZED: NO DOCKET #
FACIL:50-400 Shearon Harris Nuclear Power Plant, Unit 1, Carolina 05000400
AUTH.NAME AUTHOR AFFILIATION
MCCARTHY,D.C. Carolina Power & Light Co.
RECIP.NAME RECIPIENT AFFILIATION
Document Control Branch (Document Control Desk)

See Reports + Drawings

SUBJECT: Forwards listed info,per NRC request as result of 921007 meeting re mod to facility high head safety injection alternate mini-flow sys.

DISTRIBUTION CODE: A001D COPIES RECEIVED:LTR 1 ENCL 1 SIZE: 2+65
TITLE: OR Submittal: General Distribution

NOTES:Application for permit renewal filed. 05000400

	RECIPIENT ID CODE/NAME	COPIES LTTR	COPIES ENCL	RECIPIENT ID CODE/NAME	COPIES LTTR	COPIES ENCL
	PD2-1 LA	1	1	PD2-1 PD	1	1
	LE,N	2	2			
INTERNAL:	ACRS	6	6	NRR/DET/ESGB	1	1
	NRR/DOEA/OTSB11	1	1	NRR/DST/SELB 7E	1	1
	NRR/DST/SICB8H7	1	1	NRR/DST/SRXB 8E	1	1
	NUDOCS-ABSTRACT	1	1	OC/LFMB	1	0
	OGC/HDS1	1	0	REG FILE 01	1	1
	RES/DSIR/EIB	1	1			
EXTERNAL:	NRC PDR	1	1	NSIC	1	1

NOTE TO ALL "RIDS" RECIPIENTS:

PLEASE HELP US TO REDUCE WASTE! CONTACT THE DOCUMENT CONTROL DESK. ROOM P1-37 (EXT. 504-2065) TO ELIMINATE YOUR NAME FROM DISTRIBUTION LISTS FOR DOCUMENTS YOU DON'T NEED!

TOTAL NUMBER OF COPIES REQUIRED: LTTR 22 ENCL 20

MA2

RIDS/ADDS

CP&L

Carolina Power & Light Company

OCT 09 1992

SERIAL: NLS-92-282

United States Nuclear Regulatory Commission
ATTENTION: Document Control Desk
Washington, DC 20555

SHEARON HARRIS NUCLEAR POWER PLANT
DOCKET NO. 50-400/LICENSE NO. NPF-63

HIGH HEAD SAFETY INJECTION ALTERNATE MINI-FLOW SYSTEM MODIFICATION

Gentlemen:

As a result of the meeting on October 7, 1992 between CP&L and the NRC Staff on the modification to the Shearon Harris Nuclear Power Plant (SHNPP) High Head Safety Injection Alternate Mini-Flow System, the NRC Staff requested that CP&L provide the following specific items for NRC review:

1. Modification Package for PCR-6547;

2. Basis for Setpoint Calculation, Including Scaling;

3. Motor-Operated Valve Design Basis Review, Set-Up Criteria, and Differential Pressure Test Results;

4. Information on Flow Test Equipment Accuracy and Calibration Technique;

5. Pipe Support Calculations for 3 Redesigned Anchors and Summary of Evaluation for 29 Supports;

6. Summary of Evaluation of Pipe Stresses;

7. Information on Planned Surveillance Testing, Calibration Process for Logic Modification; and

8. CP&L Position on Technical Specification Requirement.

The purpose of this letter is to submit items 3, 5, 6, and 7. The items are included as Enclosures 1 through 4, respectively. Carolina Power & Light Company expects to submit the remaining items to the NRC by October 12, 1992.

Should you have any questions about this information, please contact me at (919) 546-6901.

Yours very truly,

David C. McCarthy

David C. McCarthy
Manager
Nuclear Licensing Section

LSR/jbw

260091

Enclosures

cc: Mr. S. D. Ebneter
Mr. N. B. Le
Mr. J. E. Tedrow

411 Fayetteville Street • P. O. Box 1551 • Raleigh, N. C. 27602

9210280033 921009
PDR ADOCK 05000400
P PDR

A001

(1790HNP)

.9210280033

ENCLOSURE 1

MOTOR-OPERATED VALVE DESIGN BASIS REVIEW
SET-UP CRITERIA
DIFFERENTIAL PRESSURE TEST RESULTS

ENCLOSURE 3

SUMMARY OF EVALUATION OF PIPE STRESSES

SUMMARY OF STRESS CALCULATION FOR PCR-6547

PCR-6547 REMOVES RELIEF VALVES 2CS-R557SN-1 AND 2CS-R558SN-1 FROM SAFETY INJECTION ALTERNATE MINI-FLOW LINES 2CS2-785SN-1 AND 2CS2-786SN-1, AND INSTALLS ORIFICES AND STRAINERS IN THE ABOVE REFERENCED LINES. THE COMPUTER MODEL FOR STRESS CALCULATION 141-1A WAS MODIFIED AS SHOWN IN MOD. SKETCH NO. SK-6547-M-2001. THE RELIEF VALVES WERE REMOVED AND REPLACED BY ELBOWS AND THE ORIFICES AND STRAINERS WERE ADDED IN THE MODEL. BOTH THE STRAINERS AND THE ORIFICES WERE MODELED AS EQUIVALENT PIECES OF PIPE WITH THE SAME OUTSIDE DIAMETER AND WALL THICKNESS AS SHOWN ON MOD. SKETCHES SK-6547-M-2002 AND -2003. THE WEIGHTS FOR THESE COMPONENTS WERE DETERMINED USING THE INFORMATION SUPPLIED ON THE REFERENCED SKETCHES.

THE STRAINERS ARE BEING INSTALLED AT A LOCATION WHERE BOUNDARY ANCHORS FOR STRESS CALCULATION 141-1A ARE EXISTING. THESE ANCHORS WERE RELOCATED APPROXIMATELY 6 TO 9 INCHES IN ORDER TO ACCOMMODATE THE INSTALLATION OF THE STRAINERS AND REDESIGNED SUCH THAT THE ANCHORS ARE ATTACHING DIRECTLY TO THE STRAINERS.

THE STRESSES IN THE CALCULATION WERE CALCULATED PER ASME SECTION III SUBSECTION NC AND THE MAXIMUM STRESSES, STRESS RATIOS AND THE NODE POINTS WHERE THEY OCCUR ARE AS FOLLOWS:

EQUATION	MAXIMUM STRESS	STRESS RATIO	NODE POINT
8	7878 psi.	.443	714
9 (upset)	11552 psi.	.541	714
9 (emerg)	12888 psi.	.402	714
10	11436 psi.	.409	717 (see iso)

ALL VALVE ACCELERATIONS WERE REVIEWED AND FOUND TO BE BELOW THE ALLOWABLES.

THE PIPING SYSTEM AS SHOWN ON THE ATTACHED ISOMETRICS, WHICH INCLUDES THE REMOVAL OF THE RELIEF VALVES AND THE ADDITION OF THE FLOW ORIFICES AND STRAINERS, SATISFIES THE REQUIREMENTS OF CP&L NED DESIGN GUIDE DG-II.8 AND ASME SECTION III.

OS1

CAROLINA POWER AND LIGHT COMPANY

.9210280033

SHEARON HARRIS NUCLEAR POWER PLANT

PLANT OPERATING MANUAL

VOLUME 3

PART 9

PROCEDURE TYPE: Operations Surveillance Test

NUMBER: OST-1825

TITLE: Safety Injection: ESF Response Time, Train A
18 Month Interval on a Staggered Test Basis
Mode 5 - 6

REVISION 5

NOTE: This procedure has been screened in accordance with PLP-100 criteria and determined to be a Case II procedure. This procedure requires Sub-Unit/Unit Manager evaluation with concurrence of the Manager - Shift Operations/Shift Supervisor - Nuclear as to level of management required to be involved in preparations and conduct of this test.

EFFECTIVE SEP 19 1992

APPROVED: _____ 9-19-92
Signature

TITLE: MANAGER - OPERATIONS

RECEIVED
SEP 19 1992
HNP
DOCUMENT CONTROL

HNP CONTROLLED COPY# 716

List of Effective Pages

Page	Revision
1	5
2	AC-5/1
2a	AC-5/1
3 - 7	5
8	AC-5/1
9 - 14	5
15 - 20	AC-5/1
21 - 37	5
37a	AC-5/1
38 - 43	5
44 - 47	AC-5/1
48	5
48a - 50	AC-5/1
51 - 52	5
53	AC-5/1
54	5
55 - 56	AC-5/1
57 - 60	5
61	AC-5/1
62 - 74	5
75 - 76	AC-5/1
77 - 80	5
80a	AC-5/1
81 - 82	5
83 - 84	AC-5/1
85 - 86	5
86a	AC-5/1
87	5
88 - 88a	AC-5/1
89 - 90	5
91	AC-5/1
92	5
93	AC-5/1
94	5

List of Effective Pages (continued)

Page	Revision
95	AC-5/1
96 - 98	5
99-100	AC-5/1
101-104	5
105	AC-5/1
106-115	5
115a	AC-5/1
116-118	5
119	AC-5/1
120-121	5
122	AC-5/1
123-135	5
136	AC-5/1
137	5
138	AC-5/1
139-143	5
144	AC-5/1
145	5
146	AC-5/1
147	5
148	AC-5/1
149-151	5
152	AC-5/1
153	5
154	AC-5/1
155-159	5
160	AC-5/1
161-165	5
166	AC-5/1
167-171	5
171a	AC-5/1
172-173	5

1.0 PURPOSE

The purpose of this OST is as follows:

1. To verify all equipment that receives any of the following signals actuates properly:

   - Safety Injection Signal
   - Feedwater Isolation Signal
   - Control Room Isolation Signal
   - Containment Ventilation Isolation Signal
   - Containment Phase A Isolation Signal

2. This test will also be used with References 2.1 Items 29 - 38 to compile the total ESF response time.

3. This test will involve two SI signals:

   a. The first SI will be used to time the response of Train A Safety Equipment.

   b. The second SI will verify all Train A and B Safety Equipment actuates properly.

4. This test will verify all Technical Specification Surveillance requirements listed in Section 6.0.

5. This test will meet the testing requirements of FSAR 7.3.2.2.10.7

2.0 REFERENCES

2.1 Plant Operating Manual Procedures

1. PLP-106, Technical Specification Equipment List Program and Core Operating Limits Report
2. PLP-702, Independent Verification
3. OP-107, Chemical and Volume Control System
4. OP-110, Safety Injection
5. OP-111, Residual Heat Removal System
6. OP-112, Containment Spray System
7. OP-131.01, Main Turbine
8. OP-134.01, Feedwater System
9. OP-137, Auxiliary Feedwater System
10. OP-139, Service Water System
11. OP-145, Component Cooling Water
12. OP-148, Essential Services Chilled Water System
13. OP-155, Diesel Generator Power System
14. OP-168, Containment Ventilation and Vacuum Relief

2.1 Plant Operating Manual Procedures (continued)

15. OP-169, Containment Cooling and Ventilation
16. OP-172, Reactor Auxiliary Building HVAC System
17. OP-173, Control Room Area HVAC System
18. OP-177, Diesel Generator Building HVAC System
19. OP-178.01, Diesel Fuel Oil Transfer Pump Room HVAC System
20. OP-178.02, Emergency Service Water Intake Structure HVAC System
21. GP-005, Power Operation (Mode 2 to Mode 1)
22. GP-007, Normal Plant Cooldown (Mode 3 to Mode 5)
23. OST-1108, RHR Pump Operability Quarterly Interval, Modes 4, 5 and 6
24. OST-1809, Switchover to Recirculation Sumps: ESF Response Time 18 Month Interval Modes 5 or 6
25. OST-1830, Turbine Driven Auxiliary Feedwater Pump Auto Start: ESF Response Time Train A 18 Month Interval Mode 3-4
26. OST-1841, ESF Response Time Measurement for CSIP 1C-SAB 18 Month Interval Modes 1-6
27. OST-1842, Turbine Trip, ESF Response Time Train A or B 18 Month Interval Modes 1-6
28. SD-148, Essential Services Chilled Water System
29. EST-301, Engineered Safety Feature Response Time Evaluation, Safety Injection
30. EST-302, Engineered Safety Feature Response Time Evaluation, Feedwater Isolation
31. EST-303, Engineered Safety Feature Response Time Evaluation, Containment Phase A Isolation
32. EST-304, Engineered Safety Feature Response Time Evaluation, Containment Ventilation Isolation
33. EST-305, Engineered Safety Feature Response Time Evaluation, Motor Driven Auxiliary Feedwater Pumps
34. EST-306, Engineered Safety Feature Response Time Evaluation, Emergency Service Water Pumps
35. EST-307, Engineered Safety Feature Response Time Evaluation, Containment Fan Coolers
36. EST-311, Engineered Safety Feature Response Time Evaluation, Turbine Trip
37. EST-315, Engineered Safety Feature Response Time Evaluation, Containment Purge Isolation
38. EST-316, Emergency Sequencing System 1A-SA Response Time Test

2.2 Operations Documents

2.2.1 Technical Specifications

1. 3.1.2.2
2. 3.3.1
3. 3.3.2
4. 3.4.1.4.1
5. 3.5.2
6. 3.5.3
7. 3.6.2.2
8. 3.6.2.3
9. 3.6.3
10. 3.7.1.2
11. 3.7.3
12. 3.7.4
13. 3.7.6
14. 3.7.7
15. 3.7.13
16. 3.8.1.1
17. 3.8.1.2
18. 3.8.4.2

2.2.2 Final Safety Analysis Report

1. Section 7.3.1
2. Section 7.3.2

2.3 Master Drawings

2.3.1 Drawings

1. 5-S-0542 - Main Steam
2. 5-S-0544 - Main Feedwater
3. 5-S-0550 - RWST
4. 5-S-1313 - CNMT Waste Processing (RCDT)
5. 5-S-1304 - CVCS
6. 5-S-1305 - CVCS
7. 5-S-1319 - CCW

3.0 PREREQUISITES

NOTE: The intent of performing specific Section 7.1 steps while Section 3.0 is being performed is to allow for efficient use of the available manpower.

0. The following steps in Section 7.1 may be performed with Shift Supervisor - Nuclear permission before the completion of Section 3.0. A Voluntary LCO may be required if performing these Steps before Mode 5. Steps:

   - 1 through 7
   - 9 through 12
   - 14 through 17
   - 23 through 27
   - 29 through 35

   The Shift Supervisor - Nuclear has given permission to perform these Steps.

   _____

AC 5/1

1. Verify that A Train will be timed according to EST-301.

   _____

2. Review the Control Room Status File and verify the ESF Systems are aligned in a manner that will support performance of this test.

   _____

3. The performance of this OST has been coordinated with other plant evolutions such that the minimum equipment operating requirements of Tech Specs are met.

   _____

4. Instrumentation needed for the performance of this test is free of deficiency tags that affect instrument indication.

   _____

5. Any special tools and equipment required per Section 5.0 have been obtained.

   _____

6. Verify and record calibration due dates for all instrumentation listed on the Calibration Data Sheet, including the identification number.

   _____

3.0 PREREQUISITES (continued)

7. Verify the following WR&As have been initiated for support during this test:

   a. A work request to have computer maintenance available to complete the data base changes required by the attachments.

   _____

   b. A work request to have I&C available to support installation of jumpers and test equipment.

   _____

   c. A work request to have electricians available to support the installation of jumpers and test equipment.

   _____

   d. A work request to have mechanics available to support the installation and removal of an orificed spool piece in place of the 1CS-744, Charging Pumps to Refuel Water Storage Tank Relief Valve.

   _____

   e. A work request to have Plant Services available to support the movement of the dam between the two switchgear rooms.

   _____

8. An operator is available to monitor each Emergency Diesel Generator Local Control Panel during diesel operations.

   _____

9. Personnel are available with stopwatches to time the response of individual components as needed.

   _____

10. The RCS is vented to containment through at least a 2.9 square inch vent.

    _____

11. The CST level is above 10% for NPSH requirements of the AFW Pumps.

    _____

3.0 PREREQUISITES (continued)

12. The RWST level is greater than 6% for NPSH requirements of the CSIPs. _____

13. The VCT level is greater than 10%. _____

14. The following systems are aligned per the associated operating procedures as necessary to support this test:

a. Chemical and Volume Control System _____

b. Safety Injection System _____

c. Residual Heat Removal System _____

d. Auxiliary Feedwater System _____

e. Service Water System _____

f. Component Cooling Water System _____

g. Essential Services Chilled Water System _____

h. Emergency Diesel Generator System _____

i. Containment Cooling System _____

j. Containment Ventilation and Vacuum Relief System _____

k. Reactor Auxiliary Building HVAC System _____

l. Control Room Area HVAC System _____

m. Diesel Generator Building HVAC System _____

n. Diesel Fuel Oil Transfer Pump Room HVAC System _____

o. ESW Intake Structure HVAC System _____

p. Solid State Protection System _____

q. Reactor Protection System _____

3.0 PREREQUISITES (continued)

15. The B Train of RHR is aligned for normal shutdown cooling of the RCS with CVCS letdown aligned through 1RH-64 per OP-111.

_____

16. The A Train of RHR is operable and is in cooldown alignment per OP-111 but does not have to be in operation.

_____

17. Normal Service Water is supplying the A Train ESW Header per OP-139.

_____

18. The B ESW Pump is supplying the B Train ESW Header per OP-139 from the Auxiliary Reservoir.

_____

19. The A ESW suction path is aligned to the Auxiliary Reservoir per OP-139.

_____

20. The RCS is filled above the Hot Legs.

_____

21. There is no fuel movement underway in the Containment Building.

_____

22. The SI Accumulators are depressurized.

_____

NOTE: The following step prevents lifting of relief valves while the Containment Spray System is run on recirculation.

23. The Fuel Pool and Refueling Water Purification System is not aligned to the RWST.

_____

24. The SG Wet Layup Pumps are off.

_____

3.0 PREREQUISITES (continued)

NOTE: If a computer input point is not available, an operator will be required to time the component with a calibrated stop watch accurate within 0.1 seconds and to record the appropriate data on Attachment 1.

25. The ERFIS computer is operable to verify the timing of all components on Attachments 3 through 9 from a timing start signal of MCB manual actuation of Safety Injection.

_____

26. The ERFIS Computer is available to record information with the following available:

a. Sequence of Events Task _____

b. STA Safeguards Terminal _____

c. ERFIS Alarm Logs _____

CAUTION

THIS PROCEDURE INVOLVES AN INFREQUENT TEST OR EVOLUTION WITH THE POTENTIAL TO REDUCE MARGINS OF SAFETY OR INTRODUCE UNWANTED TRANSIENTS OR ACCIDENTS IF PERFORMED INCORRECTLY, DEPENDING ON THE SPECIFIC PLANT CONDITIONS AT THE TIME OF THE TEST. CONDITIONS AND MANAGEMENT INVOLVEMENT ARE DOCUMENTED ON PLP-100-1.

---

27. A PLP-100 shift brief has been performed by the applicable level of management.

_____

28. The Shift Supervisor - Nuclear has granted permission to perform this OST and all prerequisites are met.

_____ _____

Shift Supervisor - Nuclear Date

4.0 PRECAUTIONS AND LIMITATIONS

1. Sections in this procedure are to be performed in order. Each section is labeled as parallel or sequential. A note at the beginning of each section lists exceptions and gives further guidance.

2. Refer to the listed OP for starting duties of pump motors.

   - OP-107 - Charging Safety Injection Pump
   - OP-111 - Residual Heat Removal Pump
   - OP-112 - Containment Spray Pump
   - OP-137 - Auxiliary Feedwater Pump
   - OP-139 - Emergency Service Water Pump
   - OP-139 - Emergency Service Water Booster Pump
   - OP-145 - Component Cooling Water Pump
   - OP-148 - Essential Services Chilled Water WC-2

3. Operation of a pump on recirculation for extended periods of time can lead to pump damage. Ensure individual pump recirculation limitations are observed as stated in the associated Operating Procedure.

4. The Emergency Diesel Generators may be operated for a maximum of 1 minute without external cooling with no adverse effects.

5. All independent verifications of jumper removal or lead retermination shall be made according to PLP-702.

6. Operators monitoring the diesel should be aware that starting the diesel with an accident signal will bypass the non-emergency trips. While performing this test, actions may need to be taken to protect the diesel from damage if a non-emergency trip signal is received during an emergency start.

7. Ensure heatup and cooldown rates are maintained within the limits of Tech Specs 3.4.9.2 and 3.4.9.3.

8. Maintain VCT level greater than 10% throughout the test.

9. During the performance of this test, do not allow operations that would cause a dilution of the RCS boron concentration.

5.0 SPECIAL TOOLS AND EQUIPMENT

1. Fluke Digital Multimeter or equivalent
2. Electrical Jumpers
3. Locked Valve Keys
4. MCB/ACP Transfer Switch Handle
5. Three (3) Calibrated Stopwatches, Fisher 14-649-5 or equivalent
6. Two-way radios or Sound Powered Phones
7. Contact pyrometer as required by OP-155.
8. Diesel Generator Mode Selector Switch Key
9. Diesel Engine Control Panel Key
10. Electrical Equipment Room Door Key
11. Copy of OP-155, Attachments 6, 7 and 8.
12. Orificed spool piece to be installed in place of 1CS-744 (the spool piece shall be orificed to limit flow to 100-110 gpm at 2500 psid).
13. Six (6) 20K Test Potentiometers.

6.0 ACCEPTANCE CRITERIA

NOTE: This test is to verify all actions that occur from a SIAS. For this test to be satisfactory, only the actions listed in Section 6.0 must occur.

Tech Spec - 4.1.2.2.c - Each automatic valve in the boration flow path actuates properly on an SIAS and is verified in the following:

- Section 7.8 Steps 6.a and 6.c
- Section 7.9 Steps 5.a and 5.b
- Section 7.11 Steps 16, 18, 20, and 22
- Attachment 7

AC 5/1

Tech Spec - 4.3.2.1 Table 4.3-2 - Each Slave Relay, Master Relay, and trip actuating device operational test is satisfactory.

Item 1.a - The MCB SI Switches initiate SIAS and is verified in the following:

- Section 7.3 Steps 12 and 21
- Section 7.4 Step 25
- Section 7.11 Steps 10, 11a and 12.a
- Section 7.13 Steps 7, ,8 ,9, 10, 14, 16, 18 and 19
- Section 7.14 Step 13
- Attachment 3
- Attachment 9
- Attachment 11

AC 5/1

Item 1.b - Each relay will properly actuate on an SIAS and is verified in the following:

- Section 7.4 Step 25.a
- Section 7.11 Step 26
- Section 7.13 Step 14
- Attachments 3 - 9 and 11

AC 5/1

AC 5/1

Item 3.a.1 - The MCB Phase A Isolation switches will initiate a CNMT Phase A Isolation and is verified in the following:

- Section 7.12 Step 3, 4.a - 4.h, 7, 9.a and 9.b
- Tech Spec 4.6.3.2.a

AC 5/1

Item 3.a.2 - Each relay properly actuates on a CNMT Phase A Isolation signal as verified in Tech Spec 4.6.3.2.a.

Item 3.a.3 - Each Phase A Isolation valve shuts on an SIAS as verified in Tech Spec 4.6.3.2.a.

Item 3.c.2 - Each CNMT Vent Isol Slave Relay properly actuates on an SIAS as verified in Tech Spec 4.6.3.2.c.

Item 3.c.3 - The Containment Ventilation isolated on an SIAS as verified in Tech Spec 4.6.3.2.c.

6.0 ACCEPTANCE CRITERIA (continued)

Item 3.c.5 - The Containment Ventilation isolates on a manual Phase A Isolation and is verified in the following: AC S/I

- Section 7.12 Steps 3, 4.i - 4.l, 7, and 9.c - 9.f
- Tech Spec 4.6.3.2.c

Item 5.a - The Turbine and Feedwater Isolation Slave and Master Relays properly actuate on an SIAS and are verified in the following:

- Feedwater Isolation verified in: AC S/I
  - Section 7.3 Steps 47 and 52
  - Section 7.13 Step 24
  - Attachment 3
- Turbine Trip verified in:
  - Section 7.4 Step 12
  - Section 7.13 Step 18
  - OST-1842

Item 5.c - There is a Turbine Trip and Feedwater Isolation occur on an SIAS and are verified in the following:

- Feedwater Isolation verified in: AC S/I
  - Section 7.3 Steps 47 and 52
  - Section 7.13 Step 24
  - Attachment 3
- Turbine Trip verified in:
  - Section 7.4 Step 12
  - Section 7.13 Step 18
  - OST-1842

Item 6.b - Each AFW Slave Relay properly actuates on an SIAS and is verified in Section 7.11 Step 29 AC S/I

Item 6.d - Both Motor Driven AFW Pumps start on an SIAS and are verified in Section 7.11 Step 29 AC S/I

Item 7.b - Verify the Slave Relay for Safety Injection Switchover to the CNMT Sump actuates on an SIAS and is verified in the following:

- Section 7.4 Step 14
- Section 7.13 Step 22
- OST-1809

6.0 ACCEPTANCE CRITERIA (continued)

Tech Spec - 4.3.2.2 (Reference PLP-106 Attachment 2). ESF response time, total response time is compiled in the referenced EST with data from the appropriate attachment to this OST.

Items 2.a, 3.a, and 4.a - Safety Injection in less than or equal to 12 seconds using EST-301 with Attachment 7 (LCV-115B less than or equal to 17 seconds and LCV-115C less than or equal to 27 seconds; C CSIP tested in OST-1841; A RHR flow tested in OST-1108).

Items 2.a.2, 3.a.2, 4.a.2, and 8.b - Feedwater Isolation Valves shut in less than or equal to 10 seconds using EST-302 with Attachment 3.

Items 2.a.3, 3.a.3, and 4.a.3 - CNMT Phase A Isolation Valves shut in less than or equal to 62 seconds using EST-303 with Attachment 4.

Items 2.a.4, 3.a.4, and 4.a.4 - CNMT Vent Isolation Valves shut in less than or equal to 4.75 seconds using EST-304 with Attachment 8.

Items 2.a.5, 3.a.5, 4.a.5, and 10 - Motor-Driven AFW Pumps start and reach discharge pressure in less than or equal to 60 seconds using EST-305 with Attachment 5.

Items 2.a.6, 3.a.6, and 4.a.6 - Emergency Service Water Pumps start and reach discharge pressure in less than or equal to 22 seconds using EST-306 with Attachment 6.

Items 2.a.7, 3.a.7, and 4.a.7 - CNMT Fan Coolers start in less than or equal to 50 seconds using EST-307 with Attachment 9.

Item 14.a - Normal Containment Purge Isolation Valves shut in less than or equal to 3.5 seconds using EST-315 with Attachment 8.

Item 14.b - Pre-entry Containment Purge Isolation Valves shut in less than or equal to 15 seconds using EST-315 with Attachment 8.

Tech Spec - 4.5.2.e.1 - Each automatic valve in the ECCS Flow Path actuates to its correct position on an SIAS (switchover in OST-1809) and is verified in the following:

- Section 7.6 Steps 7 and 8.a
- Section 7.7 Step 6.a
- Section 7.8 Steps 6.a and 6.c
- Section 7.9 Step 5.a and 5.b
- Section 7.11 Steps 16, 18, 20, and 22
- Attachment 7 for valves

AC 5/1

6.0 ACCEPTANCE CRITERIA (continued)

Tech Spec - 4.5.2.e.2.a - Each Charging/Safety Injection Pump starts on an SIAS and is verified in the following:

- Section 7.11 Step 15
- Section 7.13 Step 19.a
- Attachment 7 for CSIPs

AC S/I

Tech Spec - 4.5.2.e.2.b - Each Residual Heat Removal Pump starts on an SIAS and is verified in the following:

- Section 7.11 Step 30
- Attachment 7 for RHR Pumps

AC S/I

Tech Spec - 4.5.3.1 - ECCS Operability - Reference Acceptance Criteria for the following Tech Specs:

- 4.5.2.e.1
- 4.5.2.e.2.a
- 4.5.2.e.2.b for Mode 4

Tech Spec - 4.6.2.2.c - Each automatic valve in the Containment Spray flow path actuates to its correct position on a Phase A Isolation Signal and is verified in the following:

- Attachment 4
- Attachment 11
- OST-1807

Tech Spec - 4.6.2.3.b - Each Containment Fan Cooler Train starts on an SIAS and is verified in the following:

- Section 7.3 Step 22
- Section 7.11 Step 11
- Section 7.13 Steps 16.a - 16.h
- Attachment 9

AC S/I

Tech Spec - 4.6.3.2.a - Each Phase A Isolation valve actuates to the isolation position on a Phase A Isolation Signal and is verified in the following:

- Section 7.11 Step 24
- Section 7.12 Steps 4.a - 4.h, 9.a and 9.b
- Attachment 4
- Attachment 11

AC S/I

Tech Spec - 4.6.3.2.c - Each Containment Ventilation Isolation valve actuates to the isolation position on a CVIS and is verified in the following:

- Attachment 8
- Attachment 11

6.0 ACCEPTANCE CRITERIA (continued)

Tech Spec - 4.6.3.2.d - Each Containment Isolation Valve that receives an SIAS actuates to the correct position on an SIAS and is verified in the following:

- Section 7.7 Step 6.a
- Section 7.9 Step 5.a
- Attachment 7
- Attachment 11

Tech Spec - 4.6.3.2.f - Each Feedwater Isolation Valve actuates to the correct position on an MFIS and is verified in the following:

- Section 7.3 Step 52
- Attachment 3

Tech Spec - 4.7.1.2.1.b.1 - Each Motor Driven AFW Pump starts on AFW Actuation Signal (Turbine Driven AFW Pump tested in OST-1830 and OST-1831) and is verified in the following:

- Section 7.11 Step 29

AC S/I

Tech Spec - 4.7.3.b.1 - Each automatic CCW Valve servicing safety-related equipment or isolating non-safety portions of the system actuates to the correct position on an SIAS and is verified in Attachment 11.

Tech Spec - 4.7.3.b.2 - Each CCW Pump starts on an SIAS as verified in the following:

- Section 7.3 Steps 40 and 42.b
- Section 7.13 Step 19.b
- Attachment 11

Tech Spec - 4.7.4.b.1 - Each automatic ESW Valve servicing safety-related equipment or isolating non-safety portions of the system actuates to the correct position on an SIAS and is verified in the following:

- Section 7.13 Steps 12, 13, and 14
- Section 7.14 Step 13

AC S/I

Tech Spec - 4.7.4.b.2 - Each ESW Pump starts on an SIAS and is verified in Section 7.13 Step 14.

6.0 ACCEPTANCE CRITERIA (continued)

Tech Spec - 4.7.6.d.2 - Control Room Emergency Filtration System switches into recirculation mode with flow through the HEPA filters and charcoal absorber banks on an SIAS or High Radiation Signal and is verified in the following:

- SIAS verified in:
  - Section 7.4 Step 25.a
  - Section 7.13 Step 3
- High Radiation signal verified in MST-I0359

Tech Spec - 4.7.7.d.2 - RAB Emergency Exhaust System starts on an SIAS and is verified in Section 7.13 Step 9.

AC S11

Tech Spec - 4.7.13.b.1 - The nonessential portions of the Essential Services Chilled Water system are automatically isolated on an SIAS and are verified in Attachment 11.

Tech Spec - 4.7.13.b.2 - Each Essential Chiller starts on an SIAS and is verified in Attachment 11.

Tech Spec - 4.8.1.1.2.f.5 - Each Emergency Diesel Generator starts on an SIAS and operates on standby for greater than or equal to 5 minutes and is verified in the following:

- Section 7.3 Step 43
- Section 7.6 Step 8.b
- Section 7.8 Step 6.b
- Section 7.11 Step 33

Tech Spec - 4.8.1.2 - For Emergency Diesel Generator Operability reference Tech Spec 4.8.1.1.2.f.5 for Modes 5 and 6.

Tech Spec - 4.8.4.2.a - The Control Room HVAC valves bypass the thermal overload device and actuate to the correct position upon receipt of a Control Room Isolation Signal (Reference PLP-106 Attachment 7 for Control Room HVAC valves only) and are verified in the following:

- Section 7.4 Step 25.a
- Section 7.13 Step 3

7.0 PROCEDURE

7.1 Equipment Setup

NOTE:
- Except as noted, all steps in this section can be performed in parallel.
- Attachment 8, Jumpers and Lifted Leads, is provided as a quick reference.
- It will take approximately 16 man-hours for computer maintenance to change the alarm setpoints and computer polling rates.

1. Have computer maintenance personnel perform Attachments 10 and 12.

_____

NOTE: It is desirable to make a hard copy of the display using the Function F6, PRINT STATUS OF ALL INPUT TO ALL GROUPS, when Safety Injection is initiated to allow post-test verification of equipment operation. If this is not possible, archive data may have to be used or visual observation of the CRT screen by the operator.

2. Place the STA console ERFIS terminal in the Safeguards (SG) mode.

_____

3. After Step 1 has been completed, perform the following:

   a. Have Computer Maintenance verify the computer loading factor is not exceeded.

_____

   b. Have Computer Maintenance create a Data Base Save Tape for future use.

_____

7.1 Equipment Setup (continued)

4. Have electricians and an operator perform the following on Emer Bus A-SA Cubicle 7, Charging/Safety Injection Pump 1C-SAB:

   a. Open the Control Power Switch.

   _____

   b. Defeat the Truck Operated Contact (TOC) Switch.

   _____

   c. Install a jumper from Terminal TA3 to 52AS Contact 11 (on the breaker). (6-B-401 0223)

   _____

   d. Install a jumper from Terminal TA4 to 52AS Contact 12 (on the breaker).

   _____

   e. Position the breaker to test.

   _____

   f. Shut the Control Power Switch.

   _____

5. Have electricians and an operator perform the following on Emer Bus A-SA Cubicle 3, Component Cooling Water Pump 1C-SAB:

   a. Open the Control Power Switch.

   _____

   b. Defeat the Truck Operated Contact (TOC) Switch.

   _____

   c. Install a jumper from Terminal TA3 to 52AS Contact 11 (on the breaker): (6-B-401 943)

   _____

   d. Install a jumper from Terminal TA4 to 52AS Contact 12 (on the breaker).

   _____

7.1 Equipment Setup (continued)

e. Position the breaker to test.

_____

f. Shut the Control Power Switch.

_____

6. Have electricians and an operator perform the following on Aux Bus 1B Cubicle 1B-6, Main Feedwater Pump 1B-NNS:

a. Open the Control Power Switch.

_____

b. Defeat the Truck Operated Contact (TOC) Switch.

_____

c. Install a jumper from Terminal TA7 to 52AS Contact 11 (on the breaker) (6-B-401 1803).

_____

d. Install a jumper from Terminal TA8 to 52AS Contact 12 (on the breaker).

_____

e. Position the breaker to test.

_____

f. Shut the Control Power Switch.

_____

7. Have electricians and an operator perform the following on Aux Bus 1A Cubicle 1A-6, Main Feedwater Pump 1A-NNS:

a. Open the Control Power Switch.

_____

b. Defeat the Truck Operated Contact (TOC) Switch.

_____

c. Install a jumper from Terminal TA7 to 52AS Contact 11 (on the breaker). (6-B-401 1801)

_____

7.1 Equipment Setup (continued)

d. Install a jumper from Terminal TA8 to 52AS Contact 12 (on the breaker).

_____

e. Position the breaker to test.

_____

f. Shut the Control Power Switch.

_____

NOTE: The back up SI Signal and UV to the DG will remain operable after the next step.

8. To block the Primary SI Start Signal to Emergency Diesel Generator A-SA, lift and tape the W Wire (Cable 11988W-SA) from the field side of Terminal TB604-4 in SSP(A) Output Cabinet 1. (6-B-401 1988)

_____

9. To bypass the following Main Feedwater Pump Start Permissives, install the following jumpers in ARP-10:

- Booster Pump running
- Low Suction Press
- Suction valve open
- Recirc valve open
- Lube Oil Press

a. The Main Feedwater Pump A-NNS, between Terminals 41 and 98 on Row F2. (6-B-401 1851)

_____

b. The Main Feedwater Pump B-NNS, between Terminals 43 and 107 on Row R2. (6-B-401 1853)

_____

10. To bypass the Main Feed Pump Seal Water Permissive, install a jumper in ARP-10 Row F2, between terminals 107 and 108. (6-B-401 1851)

_____

7.1 Equipment Setup (continued)

11. To block the A and B Main Feed Pump trips, except for SI, lift the following wires in ARP-10: (6-B-401 1852 and 1854)

    a. On Row R4, lift and tape Wires C1-5 and E1-5 R 3 from Terminal 5 of Relay CR9/1854.

    _____

    b. On Row R4, lift the W Wire (Cable 11854G) from the field side of Terminal 84.

    _____

    c. On Row R4, place a jumper between W Wire (Cable 11854G) lifted from Terminal 84 to Terminal 5 of Relay CR9/1854.

    _____

    d. On Row F4, lift and tape Wires TB112 and F1 2 F1 from Terminal 5 of Relay CR9/1852.

    _____

    e. On Row F4, lift the W Wire (Cable 11852G) from the field side of Terminal 112.

    _____

    f. On Row F4, place a jumper between W Wire lifted from Terminal 112 to Terminal 5 of Relay CR9/1852.

    _____

12. To block the low SG pressure signals to the Main Feedwater Valves and Pumps, lift and tape the following field side wires in ARP-9: (6-B-401 1845)

    a. On Row R2, the W Wire (Cable 11845E) from Terminal 53

    _____

    b. On Row F4, the W Wire (Cable 11845D) from Terminal 49

    _____

    c. On Row F2, the W Wire (Cable 11845C) from Terminal 52

    _____

7.1 Equipment Setup (continued)

13. To bypass the CNMT low ΔP trip to the CNMT Normal and Pre-entry Purge Supply Fans, install a jumper in ARP-17 Row R1, from Terminals 44 to 45: (6-B-401 2706)

_____

14. To block the AFW Pump start on the trip of both Main Feedwater Pumps Signal, lift and tape wire K1 1 F3 from Terminal 5 of Relay CR12/1852 in ARP-10 Row F4. (6-B-401 1852)

_____

NOTE: The low SG pressure jumpers may be already installed, based on current plant condition.

15. To block the low SG Pressure Signal to the SG Blowdown Isolation Valves, verify the following jumpers installed:

a. In ARP-19A(SA) Row F3:

(1) Between Terminals 44 and 58 (6-B-401 1207) _____

(2) Between Terminals 93 and 107 (6-B-401 1209) _____

(3) Between Terminals 21 and 35 (6-B-401 1211) _____

b. In ARP-19B(SB) Row F3:

(1) Between Terminals 44 and 58 (6-B-401 1191) _____

(2) Between Terminals 26 and 40 (6-B-401 1194) _____

(3) Between Terminals 7 and 21 (6-B-401 1192) _____

(4) Between Terminals 104 and 118 (6-B-401 1195) _____

(5) Between Terminals 63 and 77 (6-B-401 1193) _____

(6) Between Terminals 83 and 97 (6-B-401 1196) _____

7.1 Equipment Setup (continued)

16. To enable computer timing of 1CS-746, CHARGING/SI PUMP A-SA ALTERNATE MINIFLOW ISOL, have I&C perform the following:

a. In MTC-1A SA Panel 2, lift the following wires:

(1) The O Wire (Cable 10293H-SA) from Terminal 89 (6-B-401 295)

(2) The G Wire (Cable 10293H-SA) from Terminal 92 (6-B-401 295)

(3) The U Wire (Cable 10293H-SA) from Terminal 91 (6-B-401 295)

b. Place a jumper between the O Wire lifted from MTC-1A SA Panel 2 Terminal 89 and MTC-1A SA Panel 3 Terminal 20. (6-B-401 317)

c. Place a jumper between the G Wire lifted from MTC-1A SA Panel 2 Terminal 92 and MTC-1A SA Panel 3 Terminal 23. (6-B-410 317)

d. Place a jumper between the U Wire lifted from MTC-1A SA Panel 2 Terminal 91 and MTC-1A SA Panel 3 Terminal 22. (6-B-401 317)

e. Notify the Main Control Room that Substeps a through d are complete.

7.1 Equipment Setup (continued)

17. After the above jumpers are installed, perform the following:

a. Verify shut 1CS-745, CHARGING/SI PUMP A-SA ALTERNATE MINIFLOW.

_____

b. Open 1CS-746, CHARGING/SI PUMP A-SA ALTERNATE MINIFLOW.

_____

c. Verify proper operation of the following ERFIS Computer Points:

- ZCS0295A SHUT to NOT SHUT _____
- ZCS0295B NOT OPEN to OPEN _____

d. Shut 1CS-746, CHARGING/SI PUMP A-SA ALTERNATE MINIFLOW.

_____

NOTE: The following step is time dependent, and must not be performed during the Spool piece installation of Step 28.

e. Open 1CS-745, CHARGING/SI PUMP A-SA ALTERNATE MINIFLOW.

_____

18. Install the following jumpers to allow both fans to start in each Containment Fan Cooler.

a. In ARP-4A-SA:

(1) Row F1, between Terminals 105 and 106 (6-B-401 2679)

_____

(2) Row F3, between Terminals 116 and 117 (6-B-401 2679)

_____

7.1 Equipment Setup (continued)

b. In ARP-4B-SB:

(1) Row F1, between Terminals 116 and 117 (6-B-401 2740)

_____

(2) Row F3, between Terminals 116 and 117 (6-B-401 2740)

_____

19. To block the Train B Manual Safety Injection, in MTC-3B SB Panel 3 lift and tape the W Wire (Cable 10094B-SB) from Terminal 21. (6-B-401 94)

_____

NOTE: All components with a Pretest position of NA on Attachment 2 will be addressed in the body of the procedure.

20. Record as found condition of all components on Attachment 2 and align to the Pretest position.

_____

21. Open the following breakers to de-energize the Pressurizer Heaters:

a. 480V Aux Bus 1A1 Cubicle 1D

_____

b. 480V Aux Bus 1B1 Cubicle 4B

_____

c. 480V Aux Bus 1D2 Cubicle 5B

_____

d. 480V Aux Bus 1D1 Cubicle 4D

_____

7.1 Equipment Setup (continued)

22. To block the low PRZ level signal to the PRZ Heaters and Letdown Isolation Valves, lift and tape the following field side wires in Auxiliary Relay Rack 1 (AR-1). (6-B-401 171)

    a. From Terminal 11 of TB-108

    _____

    b. From Terminal 7 of TB-112

    _____

23. Align the Containment Preentry Purge for normal operation per OP-168.

    _____

NOTE: Steps 24 through 27 must be performed in sequential order.

24. Verify CHARGING/SI PUMP B-SB is the operable CSIP and that Emer Bus A-SA Cubicle 5, Charging/SI Pump A-SA is racked out.

    _____

NOTE: The intent of installing the orificed spool piece is to allow for response time testing of CHARGING/SI PUMP A-SA without SI flow to the RCS. The spool piece is used to allow the CSIP A-SA to be isolated from the RCS during testing without relying on 1CS-744, Charging Pumps to Refuel Water Storage Tank Relief Valve for pump protection.

25. Locally shut and lock 1CS-183, A CSIP Disch Isol Vlv.

    _____

26. Change the Shift Supervisors clearance from CHARGING/SI PUMP A-SA to 1CS-183, A CSIP Disch Vlv. This will allow the pump to be run on recirculation as allowed by Tech Spec 3.1.2.3.

    _____

27. Shut 1CS-182, CHARGING/SI PMP A-SA MINIFLOW ISOL.

    _____

7.1 Equipment Setup (continued)

NOTE: The following step will require a clearance per AP-020. 1CS-183 and 1CS-182 must remain shut when the clearance is removed.

28. Have maintenance remove 1CS-744, Charging Pumps to Refueling Waster Storage Tank Relief Valve and install an orificed spool piece.

_____

29. To ensure a flow path from the CSIP to the RWST, verify the following valves are open after the spool piece is installed for 1CS-744:

a. 1CS-747, A CSIP Alt Mini Flow Man Isol Vlv

OPEN _____

b. 1CS-745 A-SA, CHARGING/SI PMP ALTERNATE MINIFLOW ISOL

OPEN _____

c. 1CT-101, CNMT Spray Header Recirc Line to RWST Isol Vlv

OPEN _____

d. 1CT-21, RWST Inlet Line Isol Vlv

OPEN _____

30. To isolate flow from the AFW Pumps to the SGs perform the following:

a. Shut 1AF-55, AUX FW A ISOLATION

_____

b. Shut 1AF-93, AUX FW B ISOLATION

_____

c. Shut 1AF-74, AUX FW C ISOLATION

_____

7.1 Equipment Setup (continued)

31. Verify there is a clear AFW recirculation path to the CST by verifying the following:

a. Locally, 1AF-22, AFWP 1B Recirc to CST Isol, locked open.

_____

b. Locally, 1AF-3, AFWP 1A Recirc to CST, locked open.

_____

c. 1AF-24, AUX FW PUMP B-SB RECIRC, open.

_____

d. 1AF-5, AUX FW PUMP A-SA RECIRC, open.

_____

NOTE:
- The simultaneous lifting of transmitter leads for the same Steam Generator in Steps 32, 33 and 34 will generate a Reactor Trip Signal.
- Indicated Steam Generator A level is to remain above the low-low level trip setpoint to enable Reactor Trip Breaker closure.

32. If SG A level will not remain above the low-low level trip setpoint, perform the following in the specified NSSS PIC Cabinet on two of the three listed level transmitter loops and NA the transmitter loop not performed:

a. LT-474 Channel I (1364-046574 S09, 6-B-401 993)

(1) Lift and tape the LT-474 Transmitter Field Lead at TBF-10 in PIC Cab-1.

_____

(2) Connect a 20K Test Potentiometer between Terminals TBF-10 and TBF-11 in PIC Cab-1.

_____

(3) Adjust the Test Potentiometer to clear TSLB 2 Window 4-1 and Window 7-1.

_____

7.1 Equipment Setup (continued)

b. LT-475 Channel II (1364-046575 S09, 6-B-401 993)

(1) Lift and tape the LT-475 Transmitter Field Lead at TBF-10 in PIC Cab-2.

(2) Connect a 20K Test Potentiometer between Terminals TBF-10 and TBF-11 in PIC Cab-2.

(3) Adjust the Test Potentiometer to clear TSLB 2 Window 4-2 and Window 7-2.

c. LT-476 Channel III (1364-046576 S09, 6-B-401 994)

(1) Lift and tape the LT-476 Transmitter Field Lead at TBF-10 in PIC Cab-3.

(2) Connect a 20K Test Potentiometer between Terminals TBF-10 and TBF-11 in PIC Cab-3.

(3) Adjust the test potentiometer to clear TSLB 2 Window 4-3 and Window 7-3.

7.1 Equipment Setup (continued)

NOTE: Indicated Steam Generator B level is to remain above the low-low level trip setpoint to enable Reactor Trip Breaker closure.

33. If SG B level will not remain above the low-low level trip setpoint, perform the following, in the specified NSSS PIC Cabinet on two of the three listed level transmitter loops and NA the transmitter loop not performed:

a. LT-484 Channel I (1364-046574 S10, 6-B-401 993)

(1) Lift and tape the LT-484 Transmitter Field Lead at TBF-13 in PIC Cab-1.

_____

(2) Connect a 20K Test Potentiometer between Terminals TBF-13 and TBF-14 in PIC Cab-1.

_____

(3) Adjust the Test Potentiometer to clear TSLB 2 Window 5-1 and Window 8-1.

_____

b. LT-485 Channel II (1364-046575 S10, 6-B-401 993)

(1) Lift and tape the LT-485 Transmitter Field Lead at TBF-13 in PIC Cab-2.

_____

(2) Connect a 20K Test Potentiometer between Terminals TBF-13 and TBF-14 in PIC Cab-2.

_____

(3) Adjust the Test Potentiometer to clear TSLB 2 Window 5-2 and Window 8-2.

_____

7.1 Equipment Setup (continued)

c. LT-486 Channel III (1364-046576 S10, 6-B-401 994)

(1) Lift and tape the LT-486 Transmitter Field Lead at TBF-13 in PIC Cab-3.

_____

(2) Connect a 20K Test Potentiometer between Terminals TBF-13 and TBF-14 in PIC Cab-3.

_____

(3) Adjust the Test Potentiometer to clear TSLB 2 Window 5-3 and Window 8-3.

_____

NOTE: Indicated Steam Generator C level is to remain above the low-low level trip setpoint to enable Reactor Trip breaker closure.

34. If SG C level will not remain above the low-low level trip setpoint, perform the following in the specified NSSS PIC Cabinet on two of the three listed level transmitter loops and NA the transmitter loop not performed:

a. LT-494 Channel I (1364-046574 S11, 6-B-401 993)

(1) Lift and tape the LT-494 Transmitter Field Lead at TBF-16 in PIC Cab-1.

_____

(2) Connect a 20K Test Potentiometer between Terminals TBF-16 and TBF-17 in PIC Cab-1.

_____

(3) Adjust the test potentiometer to clear TSLB 2 Window 6-1 and Window 9-1.

_____

7.1 Equipment Setup (continued)

b. LT-495 Channel II (1364-046575 S11, 6-B-401 993)

(1) Lift and tape the LT-495 Transmitter Field Lead at TBF-16 in PIC Cab-2.

_____

(2) Connect a 20K Test Potentiometer between Terminals TBF-16 and TBF-17 in PIC Cab-2.

_____

(3) Adjust the Test Potentiometer to clear TSLB 2 Window 6-2 and Window 9-2.

_____

c. LT-496 Channel III (1364-046576 S11, 6-B-401 994)

(1) Lift and tape the LT-496 Transmitter Field Lead at TBF-16 in PIC Cab-3.

_____

(2) Connect a 20K Test Potentiometer between Terminals TBF-16 and TBF-17 in PIC Cab-3.

_____

(3) Adjust the Test Potentiometer to clear TSLB 2 Window 6-3 and Window 9-3.

_____

35. Review HDAL and HAAL Alarm Logs for erroneous alarms due to plant conditions. Instruct the computer group to temporarily delete these points from alarm processing.

_____

7.2 Pretest Verifications

NOTE: All steps in this section must be performed in sequential order.

1. Dispatch an operator to Emergency Diesel Generator A-SA to and prepare it for an automatic start per OP-155. _____

2. Verify the following valves are open:

   a. 1CP-7 SB, PRE-ENTRY PURGE ISOLATION _____

   b. 1CP-1 SB, PRE-ENTRY PURGE ISOLATION _____

   c. 1CP-10 SA, PRE-ENTRY PURGE ISOLATION _____

   d. 1CP-4 SA, PRE-ENTRY PURGE ISOLATION _____

3. At the MCB, select the A fan as the lead fan on the following Containment Fan Coolers:

   a. AH-1 SB, FAN COOLER _____

   b. AH-2 SA, FAN COOLER _____

   c. AH-3 SA, FAN COOLER _____

   d. AH-4 SB, FAN COOLER _____

4. Locally verify open the following breakers to prevent the RHR Sump Valves from opening on the RWST Lo-Lo level coincident with SIAS:

   a. MCC 1B21-SB Cubicle 7A, 1SI-311 SB CNMT Sump to RHR Pump B-SB _____

   b. MCC 1B21-SB Cubicle 11B, 1SI-301 SB CNMT Sump to RHR Pump B-SB _____

   c. MCC 1A21-SA Cubicle 9B, 1SI-310 SA CNMT Sump to RHR Pump A-SA _____

   d. MCC 1A21-SA Cubicle 7C, 1SI-300 SA CNMT Sump to RHR Pump A-SA _____

7.2 Pretest Verifications (continued)

4a. Locally verify open the following breakers to prevent the CNMT Spray Sump Valves from opening on the RWST Lo-Lo level coincident with CNMT Spray Pump running:

a. MCC 1B21-SB Cubicle 6A, 1CT-102 SB CNMT Sump to CNMT Spray Pump B-SB.

_____ AC S/I

b. MCC 1A21-SA Cubicle 8C, 1CT-105 SA CNMT Sump to CNMT Spray Pump A-SA.

_____

AC S/I

7.2 Pretest Verifications (continued)

5. To stop the BIT Valves from opening on an SIAS and to stop 1CS-238, CHARGING LINE ISOLATION, from shutting, locally open the following breakers:

   a. MCC 1A31-SA Cubicle 10A, 1CS-238 SA, Charging Line Isolation

   _____

   b. MCC 1A31-SA Cubicle 5C, 1SI-1 SA, Charging/SI Pumps to Boron Injection Tank

   _____

   c. MCC 1A31-SA Cubicle 4C, 1SI-4 SA, Boron Injection Tank Outlet

   _____

CAUTION

After each SI (one in Section 7.3 and one in Section 7.11), normal CSIP Miniflow will be isolated, and the only flow through CSIP B-SB will be charging flow. Charging flow should be maintained greater than 60 gpm to prevent dead-heading the CSIP when normal CSIP mini flow is isolated.

---

6. Open the following valves:

   a. LCV-115B, SUCTION FROM RWST _____

   b. LCV-115D, SUCTION FROM RWST _____

7. Shut the following valves:

   a. LCV-115C, VCT TO CSIP SUCTION _____

   b. LCV-115E, VCT TO CSIP SUCTION _____

8. Locally read and record CSIP A-SA suction pressure.

   _____ _____
   PI-151A

9. At the MCB, record charging flow as indicated on FI-122A.1, HEADER FLOW.

   _____ _____
   FI-122A.1

7.2 Pretest Verifications (continued)

10. Open the following valves:

    a. LCV-115C, VCT TO CSIP SUCTION _____

    b. LCV-115E, VCT TO CSIP SUCTION _____

11. Shut the following valves:

    a. LCV-115B, SUCTION FROM RWST _____

    b. LCV-115D, SUCTION FROM RWST _____

NOTE: If RWST level is increased (excluding temp changes), the required discharge pressure must be recalculated.

12. Perform the following calculation to determine the required discharge pressure for Charging/SI Pump A-SA:

    Suction pressure _____ + 2446 = _____ psig
    Step 8

    _____

    _____
    Verified

13. Place the CSIP A-SA Auxiliary Lube Oil Pump in AUTO.

    _____

14. Rack in Emer Bus A-SA Cubicle 5 for Charging/SI Pump A-SA breaker.

    _____

15. Open the following valves:

    a. 1CS-7, 45 GPM LETDOWN ORIFICE A _____

    b. 1CS-8, 60 GPM LETDOWN ORIFICE B _____

    c. 1CS-9, 60 GPM LETDOWN ORIFICE C _____

7.2 Pretest Verifications (continued)

16. Open the following valves:

a.	1BD-1, STM GEN A TUBE BLDN ISOL	_____
b.	1BD-7, STM GEN A SHELL BLDN ISOL	_____
c.	1BD-11, STM GEN A BLDN ISOL	_____
d.	1BD-20, STM GEN B TUBE BLDN ISOL	_____
e.	1BD-26, STM GEN B SHELL BLDN ISOL	_____
f.	1BD-30, STM GEN B BLDN ISOL	_____
g.	1BD-39, STM GEN C TUBE BLDN ISOL	_____
h.	1BD-45, STM GEN C SHELL BLDN ISOL	_____
i.	1BD-49, STM GEN C BLDN ISOL	_____

17. Realign the DG Fuel Oil Transfer Building HVAC as follows:

a.	E-85 A-SA, EXHAUST FAN	OFF	_____
b.	E-85 B-SA, EXHAUST FAN	ON	_____
c.	E-85 A-SB, EXHAUST FAN	OFF	_____
d.	E-85 B-SB, EXHAUST FAN	ON	_____

18. Realign the DG Building HVAC as follows:

a.	E-86 A-SA, DIESEL GEN ROOM EXHAUST FAN	OFF	_____
b.	E-86 B-SA, DIESEL GEN ROOM EXHAUST FAN	ON	_____
c.	E-86 C-SB, DIESEL GEN ROOM EXHAUST FAN	OFF	_____
d.	E-86 D-SB, DIESEL GEN ROOM EXHAUST FAN	ON	_____
e.	E-61 A-SA, DAY TANK & SILENCER ROOM EXHAUST FAN	OFF	_____
f.	E-61 B-SA, DAY TANK & SILENCER ROOM EXHAUST FAN	ON	_____
g.	E-61 C-SB, DAY TANK & SILENCER ROOM EXHAUST FAN	OFF	_____
h.	E-61 D-SB, DAY TANK & SILENCER ROOM EXHAUST FAN	ON	_____

7.2 Pretest Verifications (continued)

19. Secure the sample pump for radiation monitor RC-1LT-3502A-SA, Containment Leak Detection System as follows:

a. Notify the RMS Technician the sample pump will be stopped. _____

b. At the RM-23, depress the FLOW button on Radiation Monitor RC-1LT-3502A-SA. _____

20. Locally verify the Post Accident Hydrogen Monitor Pumps are secured from the Post Accident Hydrogen Monitor Panel. _____

21. Start the following equipment:

a. AH-37A NNS, FAN COOLER _____

b. AH-37B NNS, FAN COOLER _____

c. AH-38A NNS, FAN COOLER _____

d. AH-38B NNS, FAN COOLER _____

e. AH-39A NNS, FAN COOLER _____

f. AH-39B NNS, FAN COOLER _____

22. With AH-15 B-SB instead of AH-15 A-SA, align the A Train of Control Room HVAC, for smoke purge per OP-173. _____

23. Verify the alignment of Control Room HVAC for testing as follows:

a.	AH-15 A-SA, NORMAL SUPPLY FAN	OFF	_____
b.	AH-15 B-SB, NORMAL SUPPLY FAN	ON	_____
c.	1CZ-1 SA, NORMAL INTAKE	OPEN	_____
d.	1CZ-3 SA, NORMAL EXHAUST	OPEN	_____
e.	CZ-B9 SA, EMERGENCY FILTRATION AIR INLET	OPEN	_____
f.	CZ-B11 SA, EMERGENCY FILTRATION AIR INLET	OPEN	_____

7.2 Pretest Verifications (continued)

g.	ES-1A, PURGE EXHAUST FAN	ON	_____
h.	CZ-13 SA, PURGE EXHAUST	OPEN	_____
i.	1CZ-17 SA, PURGE MAKE UP	OPEN	_____
j.	CZ-D16 SA, EMERGENCY FILTRATION RECIRC	SHUT	_____
k.	R-2 A-SA, EMERGENCY FILTRATION FAN	OFF	_____
l.	CZ-B19 SA, EMERGENCY FILTER DISCH	SHUT	_____
m.	CZ-B21SA, R-2 FAN OUTLET (SLB-5)	SHUT	_____
n.	CZ-B23SA, R-2 FAN INLET (SLB-5)	SHUT	_____
o.	CZ-B25SA, NORMAL SUPPLY FAN DISCH (SLB-5)	SHUT	_____
p.	E-9A, NORMAL EXHAUST FAN	ON	_____

24. Verify the Train A Ventilation for testing as follows:

a. Electrical Equipment Protection Room Ventilation A Train in service per OP-172, Section 5.4.

_____

b. Align the following:

(1)	CZ-B5 SA, RAB ELEC EQUIP ROOM OAI PURGE ISOL	OPEN	_____
(2)	CZ-B7 SA, EXHAUST FAN DISCHARGE ISOL	OPEN	_____
(3)	E-10 A-SA, NORMAL EXHAUST FAN	ON	_____

c. Switchgear Room Ventilation A Train in service per OP-172.

_____

7.2 Pretest Verifications (continued)

d. Align the following as listed:

(1)	AC-D3 SA, SWGR RM OAI ISOL	OPEN	_____
(2)	E-28 A-SA, BATTERY ROOM A EXHAUST FAN	ON	_____
(3)	E-28 B-SA, BATTERY ROOM A EXHAUST FAN	ON	_____
(4)	AC-D4 SA, BATTERY ROOM A RETURN DAMPER	SHUT	_____

e. Verify Computer Room Ventilation A Train in service per OP-163, Section 8.2.

_____

f. Align the following as listed:

(1)	AH-97 (1 & 2A-NNS), NORMAL SUPPLY FAN	ON	_____
(2)	R-13 (1 & 2A-NNS), EMER FAN	OFF	_____
(3)	CK-B7-1&2, NORMAL INTAKE VLV	OPEN	_____
(4)	CK-B8-1&2, NORMAL INTAKE VLV	OPEN	_____
(5)	CK-D11-1&2, COMPUTER ROOM RTN DMPR	MODULATED	_____
(6)	CK-D12-1&2, COMMUNICATION ROOM RTN DMPR	MODULATED	_____
(7)	CK-D3-1&2, EMER FAN R-13 (1&2A) SUCTION DMPR	SHUT	_____
(8)	CK-D7-1&2, EMER INTAKE DMPR	SHUT	_____
(9)	AH-101, 305' OPERATIONS OFFICE AREA AHU FAN	ON	_____

7.2 Pretest Verifications (continued)

NOTE: The following step will cause a white overload indication on the MCB and de-activate the MCB Control Switch. These valves will still respond to a Control Room Isolation signal.

25. Locally place the Thermal Overload Test Switch to TEST for the following valves:

a. 3CZ-B3 SA, MCC 1A21-SA Cubicle 11B _____

b. 3CZ-B9 SA, MCC 1A21-SA Cubicle 9A _____

c. 3CZ-B11 SA, MCC 1A21-SA Cubicle 10A _____

d. 3CZ-B1 SA, MCC 1A36-SA Cubicle 4B _____

e. 3CZ-B13 SA, MCC 1A36-SA Cubicle 4C _____

f. 3CZ-B17 SA, MCC 1A36-SA Cubicle 1B _____

g. 3CZ-B19 SA, MCC 1A36-SA Cubicle 3E _____

h. 3CZ-B21 SA, MCC 1A36-SA Cubicle 2C _____

i. 3CZ-B23 SA, MCC 1A36-SA Cubicle 2B _____

j. 3CZ-B25 SA, MCC 1A36-SA Cubicle 1D _____

26. At AEP-1 on SLB-8, Safeguards Terminal, or the ERFIS computer verify the following RAB Normal Exhaust Dampers are open: AC S/I

a. AV-D4 SB-1 or ZAV3152C _____

b. AV-D30 SB-1 or ZAV3158C _____

c. AV-D6 SB-1 or ZAV3152A _____

d. AV-D8 SB-1 or ZAV3153C _____

e. AV-D10 SB-1 or ZAV3153A _____

f. AV-D12 SB-1 or ZAV3154C _____

g. AV-D14 SB-1 or ZAV3154A _____

h. AV-D16 SB-1 or ZAV3155C _____

i. AV-D18 SB-1 or ZAV3155A _____

j. AV-D20 SB-1 or ZAV3156C _____

k. AV-D22 SB-1 or ZAV3156A _____

l. AV-D24 SB-1 or ZAV3157A _____

7.2 Pretest Verifications (continued)

m. AV-D28 SB-1 or ZAV3158A _____

n. AV-D26 SB-1 or ZAV3157C _____

o. AV-D32 SB-1 or ZAV3159A _____

p. AV-D38 SB-1 or ZAV3160C _____

q. AV-D34 SB-1 or ZAV3159C _____

r. AV-D36 SB-1 or ZAV3160A _____

s. AV-D53 SB-1 or ZAV3161A _____

t. AV-D59 SB-1 or ZAV3161C _____

u. AV-D63 SB-1 or ZAV3162A _____

v. AV-D67 SB-1 or ZAV3162C _____

w. AV-D71 SB-1 or ZAV3163A _____

x. AV-D75 SB-1 or ZAV3163C _____

y. AV-D87 SB-1 or ZAV3165A _____

z. AV-D83 SB-1 or ZAV3164C _____

aa. AV-D79 SB-1 or ZAV3164A _____

27. At AEP-1 on SLB-10, Safeguards Terminal, or the ERFIS computer verify the following RAB Normal Exhaust Dampers are open: AC S/I

a. AV-D3SA-1 or ZAV3131C _____

b. AV-D5SA-1 or ZAV3131A _____

c. AV-D7SA-1 or ZAV3132C _____

d. AV-D9SA-1 or ZAV3132A _____

e. AV-D11SA-1 or ZAV3133C _____

f. AV-D13SA-1 or ZAV3133A _____

g. AV-D15SA-1 or ZAV3134C _____

h. AV-D17SA-1 or ZAV3134A _____

i. AV-D19SA-1 or ZAV3135C _____

7.2 Pretest Verifications (continued)

j. AV-D21SA-1 or ZAV3135A _____

k. AV-D23SA-1 or ZAV3136A _____

l. AV-D25SA-1 or ZAV3136C _____

m. AV-D27SA-1 or ZAV3137A _____

n. AV-D29SA-1 or ZAV3137C _____

o. AV-D31SA-1 or ZAV3138A _____

p. AV-D33SA-1 or ZAV3138C _____

q. AV-D35SA-1 or ZAV3139A _____

r. AV-D37SA-1 or ZAV3139C _____

s. AV-D52SA-1 or ZAV3140A _____

t. AV-D58SA-1 or ZAV3140C _____

u. AV-D62SA-1 or ZAV3141A _____

v. AV-D66SA-1 or ZAV3141C _____

w. AV-D70SA-1 or ZAV3142A _____

x. AV-D74SA-1 or ZAV3142C _____

y. AV-D78SA-1 or ZAV3143A _____

z. AV-D82SA-1 or ZAV3143C _____

aa. AV-D86SA-1 or ZAV3144A _____

28. At AEP-1 on SLB-10, verify the following E-6 Emergency Exhaust Fan Discharge Dampers are shut: AC S/I

a. EXH AV D64 _____

b. EXH AV D68 _____

c. EXH AV D60 _____

d. EXH AV D88 _____

e. EXH AV D90 _____

f. EXH AV D92 _____

g. EXH AV D96 _____

7.2 Pretest Verifications (continued)

29. At AEP-1 on SLB-8, verify the following E-6 Emergency Exhaust Fan Discharge Dampers are shut:

a. EXH AV D65 _____

b. EXH AV D69 _____

c. EXH AV D61 _____

d. EXH AV D89 _____

e. EXH AV D91 _____

f. EXH AV D93 _____

g. EXH AV D97 _____

30. Open the following valves:

a. 1FW-133, MAIN FW A REGULATOR _____

b. 1FW-249, MAIN FW B REGULATOR _____

c. 1FW-191, MAIN FW C REGULATOR _____

d. 1FW-140, MN FW A REG BYP _____

e. 1FW-256, MN FW B REG BYP _____

f. 1FW-198, MN FW C REG BYP _____

g. 1FW-159, MAIN FW A ISOLATION _____

h. 1FW-277, MAIN FW B ISOLATION _____

i. 1FW-217, MAIN FW C ISOLATION _____

j. 1AF-64, FEEDWATER A PREHEAT BYPASS _____

k. 1AF-102, FEEDWATER B PREHEAT BYPASS _____

l. 1AF-81, FEEDWATER C PREHEAT BYPASS _____

m. 1FW-307, MAIN FW A ISOLATION BYPASS ISOLATION _____

n. 1FW-319, MAIN FW B ISOLATION BYPASS ISOLATION _____

o. 1FW-313, MAIN FW C ISOLATION BYPASS ISOLATION _____

p. 1FW-165, FW A HYDRAZINE ADD ISOL _____

7.2 Pretest Verifications (continued)

q. 1FW-281, FW B HYDRAZINE ADD ISOL _____

r. 1FW-223, FW C HYDRAZINE ADD ISOL _____

s. 1FW-163, FW A AMMONIA ADD ISOL _____

t. 1FW-279, FW B AMMONIA ADD ISOL _____

u. 1FW-221, FW C AMMONIA ADD ISOL _____

31. Close the Reactor Trip Breakers.

_____

32. Rack in and close the B Reactor Trip Bypass Breaker.

_____

33. Shut the following valves:

a. 1FW-29, MAIN FW PUMP A DISCHARGE _____

b. 1FW-60, MAIN FW PUMP B DISCHARGE _____

34. At the MCB, perform the following:

a. Close A MAIN FW PUMP Bkr. _____

b. Close B MAIN FW PUMP Bkr. _____

c. Open BREAKER A FOR CHARGING/SI PUMP C-SA. _____

d. Open BREAKER A FOR CCW PUMP C-SA. _____

35. Open the following valves:

a. 1CP-9 SA, NORMAL PURGE INLET _____

b. 1CP-6 SB, NORMAL PURGE INLET _____

c. 1CP-5 SA, NORMAL PURGE DISCHARGE _____

d. 1CP-3 SB, NORMAL PURGE DISCHARGE _____

7.2 Pretest Verifications (continued)

35a. Start the AFW Pump A-SA per OP-137. _____

35b. Record AFW Pump A-SA Suction Pressure from PI-2250A1 SA.

_____ _____
PI-2250A1 SA

AC 5/1

35c. Stop the AFW Pump A-SA per OP-137. _____

7.2 Pretest Verifications (continued)

AC 5/1

36. Deleted

37. Calculate the required discharge pressure For A-SA Motor Driven AFW Pump.

_____ + 1514 psig = _____ psig
PI-2250A1 SA

_____

_____
Verified

38. Station personnel with stopwatches to determine response times at the following locations:

AC 5/1

a. At the MCB, to measure A Motor Driven AFW Discharge Pressure on PI-2150A1 SA, A DISCH PRESS.

_____

b. At SSPS Output Cabinet 1, to measure voltage. (see Section 7.3 Steps 10 and 15)

_____

NOTE: Response time is the time from initiation of SI until the CSIP A-SA reaches the discharge pressure that was calculated in Step 12.

39. Station an operator at Instrument Rack A1-R10 with a stopwatch to determine the response time of CSIP A-SA using PI-151B.

AC 5/1

_____

40. Using the Safeguards Terminal, depress key F6, PRINT STATUS OF ALL INPUTS TO ALL GROUPS.

_____

41. Record the following levels:

a. PRZ, LI-462 _____% _____

b. A Accum, LI-922 _____% _____

c. C Accum, LI-930 _____% _____

7.3 A-SA Response Time Actuation

NOTE: All steps in this section must be performed in sequential order.

CAUTION

Do not perform Steps 1 through 9 until immediately before initiating the SIAS.

---

1. Using OST-1118 Section 7.1 as a guide, start Containment Spray Pump A-SA on recirculation flow.

_____

1a. To prevent the A CCW Pump from starting on low pressure, locally Shut 1CC-98, PT-649 Root Isolation,.

AC SI

_____

2. Ensure communications between the Control Room and all personnel involved in the test have been established.

_____

3. Verify that ESW Pump A-SA is stopped.

_____

4. Open LCV-115D, SUCTION FROM RWST.

_____

5. Start AH-82 A, NORMAL PURGE SUPPLY FAN

_____

6. Stop CCW Pump A-SA.

_____

7. Open 1CS-182 SA, CHARGING/SI PUMP MINIFLOW ISOLATION.

_____

8. Stop the RHR Pump A-SA and let it coast to a stop.

_____

9. Announce the test to plant personnel involved in testing operations.

_____

7.3 A-SA Response Time Actuation (continued)

NOTE: Response time is the time from the manual Safety Injection Signal until the equipment has performed its design function, that is, valves travel to the required position as indicated by a single indicator light or pumps reach rated press or flow.

10. Have I&C perform the following steps:

a. At SSPS(A) Output Cabinet 1, verify the voltage between Time Delay Relay TD1 Terminal 6 (+) and Logic Ground (-) is 46 - 50 VDC.

_____

b. At SSPS(A) Output Cabinet 1, verify the voltage between Time Delay Relay TD1 Terminal 2 (+) and Logic Ground (-) is minus(-) 2.0 to plus(+) 2.0 VDC.

_____

c. At SSPS(A) Logic Cabinet, connect the multimeter between TB505-7 (+) and Signal Ground (-).

_____

11. Verify that Emergency Diesel Generator A-SA is Barred and Prelubed per OP-155.

_____

NOTE:
- Steps 14 and 15 must be performed within 60 seconds after SI has been initiated.
- The only flow path for CSIP A-SA after the SI is through 1CS-746, ALT MINI FLOW to the spool piece.

CAUTION

Charging flow should be maintained greater than 60 gpm to prevent dead-heading the CSIP when normal CSIP mini flow is isolated.

---

12. At the MCB Section C (Rod Control), simultaneously manually initiate Safety Injection and start the stopwatches, by taking the SAFETY INJECTION ACTUATION Switch to ACTUATE.

_____

13. Record the time that the SI was initiated.

Time _____

_____

7.3 A-SA Response Time Actuation (continued)

NOTE: Section 7.3 Steps 14 and 15 verify the SI signal cannot be reset within 60 seconds of actuation.

14. Within 60 seconds of SI actuation, place the Safety Injection Train A Reset Switch to RESET.

_____

15. At Bypass Permissive Light Box (BPLB), verify the SI RESET AUTO-SI BLOCKED light is OFF.

_____

NOTE: Slave Relay K602 is energized by the SI Signal.

16. Within 57 to 63 seconds after initiating the SI Signal, verify the voltage on the multimeter connected in Step 10 increases to 46 - 50 VDC.

_____ VDC _____ Time _____

17. Place the Safety Injection Train A Reset Switch to RESET.

_____

18. Verify the voltage on the multimeter connected in Step 10 decreases to minus(-) 2.0 to plus(+) 2.0 VDC.

_____ VDC _____

19. At Bypass Permissive Light Box (BPLB), verify the SI RESET AUTO-SI BLOCKED Light is on.

_____

20. Disconnect the multimeter installed in Step 10.

_____

_____ Verified

21. At the MCB, verify the following Reactor Trip Breakers have opened.

a. RTA (A Reactor Trip Breaker) _____

b. BYB (B Reactor Trip Bypass Breaker) _____

7.3 A-SA Response Time Actuation (continued)

22. By the absence of the CONTAINMENT FAN COOLERS LOW FLOW O/L or CONTAINMENT FAN CLRS NOT STARTED ON SIS alarms on ALB-027, verify the CNMT fan coolers started. AC 5/1

_____

23. At the MCB, reset the following:

a. Phase A Isolation Signal by positioning the following switches to RESET:

(1) CNMT ISOL PHASE A TRAIN A RESET _____

(2) CNMT ISOL PHASE A TRAIN B RESET _____

b. Feedwater Isolation Signal by positioning the following switches to RESET:

(1) FEEDWATER ISOLATION TRAIN A RESET _____

(2) FEEDWATER ISOLATION TRAIN B RESET _____

c. Control Room Ventilation Isolation Signal by positioning the following switches to RESET:

(1) CONTROL ROOM ISOLATION TRAIN A RESET _____

(2) CONTROL ROOM ISOLATION TRAIN B RESET _____

d. Containment Ventilation Isolation Signal by positioning the following switches to RESET:

(1) CONTAINMENT ISOLATION TRAIN A RESET _____

(2) CONTAINMENT ISOLATION TRAIN B RESET _____

24. At the MCB, re-energize Bus 1A1 by closing EMERGENCY BUS A-SA TO XFMR A1 BREAKER A1-SA.

_____

25. At the MCB, close the Reactor Trip Breakers.

_____

26. At the MCB Section C, trip the Reactor Trip Breakers.

_____

27. Verify 1CS-214, CHARGING/SI PUMPS MINI FLOW ISOL has shut.

_____

7.3 A-SA Response Time Actuation (continued)

28. Verify the following valves are open:

    a. 1CS-182, CHARGING/SI PMP A-SA MINIFLOW ISOL _____

    b. 1CS-196, CHARGING/SI PMP B-SB MINIFLOW ISOL _____

    c. 1CS-210, CHARGING/SI PMP C-SAB MINIFLOW ISOL _____

    d. 1CS-214, CHARGING/SI PUMPS MINIFLOW ISOL _____

    e. 1CS-7, 45 GPM LETDOWN ORIFICE ISOL _____

    f. 1CS-8, 60 GPM LETDOWN ORIFICE ISOL _____

    g. 1CS-9, 60 GPM LETDOWN ORIFICE ISOL _____

29. Verify 1CS-746, CHARGING/SI PUMP A-SA ALTERNATE MINIFLOW has opened. _____

30. Shut 1CS-746, CHARGING/SI PUMP A-SA ALTERNATE MINIFLOW ISOL VLV. _____

31. Control RHR Train B to maintain RCS temperature within heatup and/or cooldown limits. _____

32. Open HCV-142, RHR LETDOWN (1CS-28) as needed. _____

33. Verify VCT Makeup is set for greater than or equal to the present RCS boron concentration. _____

34. Stop CSIP A-SA. _____

35. At Emer Bus 1A-SA, Cubicle 5, rack out Charging/SI Pump A-SA breaker. _____

36. Verify shut LCV-115C, VCT OUTLET (1CS-165). _____

7.3 A-SA Response Time Actuation (continued)

37. Open LCV-115C, VCT OUTLET (1CS-165. _____

38. Verify open LCV-115B, SUCTION FROM RWST (1CS-291. _____

CAUTION

LCV-115E and LCV-115C, VCT OUTLET must be open to provide NPSH requirements to CSIPs before shutting LCV-115D and LCV-115B.

---

39. Shut the following valves:

    a. LCV-115B, SUCTION FROM RWST (1CS-291) _____

    b. LCV-115D, SUCTION FROM RWST (1CS-292) _____

40. Verify running CCW PUMP A-SA. _____

41. Stop MDAFW Pump A-SA. _____

42. Locally verify the following breakers closed:

    a. 1A-SA Cubicle 7, Breaker A for Charging/SI Pump 1C-SAB _____

    b. 1A-SA Cubicle 3, Breaker A for CCW Pump 1C-SAB _____

43. Verify Diesel Generator A-SA automatically started on the SIAS and has operated for 5 minutes in standby. _____

44. Stop Emergency Diesel Generator A-SA per OP-155. _____

45. Deleted AC S/I

46. Rack out Reactor Trip Bypass Breaker B. _____

7.3 A-SA Response Time Actuation (continued)

47. Verify the breakers tripped for the following:

a. Main Feed Water Pump A _____

b. Main Feed Water Pump B _____

48. At the MCB, open the following breakers:

a. BREAKER A FOR CHARGING/SAFETY INJECTION PUMP C-SA _____

b. BREAKER A FOR CCW PUMP C-SA _____

49. Rack the following breakers out and open the Control Power Switches:

a. Aux Bus 1A Cubicle 1A-6, Main Feedwater Pump 1A-NNS _____

b. Aux Bus 1B Cubicle 1B-6, Main Feedwater Pump 1B-NNS _____

c. Emer Bus 1A-SA Cubicle 7, Charging/Safety Injection Pump C-SAB _____

d. Emer Bus 1A-SA Cubicle 3, Component Cooling Water Pump C-SAB _____

NOTE: The following step clears the AFW Auto Actuation Signal from the Main Feedpump trip logic.

50. R Place the following MCB switches to STOP. (Reference 2.4 Item 2)

a. MAIN FW PUMP A _____

b. MAIN FW PUMP B _____

50a. To re-enable the A CCW Pump low pressure start, locally open 1CC-98, PT-649 Root Isolation. AC 5/11

_____

_____
Verified

7.3 A-SA Response Time Actuation (continued)

51. Have electricians perform the following:

a. At Emer Bus 1A-SA Cubicle 7, SA Breaker for CHARGING/SI PUMP 1C-SAB perform the following:

(1) Remove the jumper between Terminal TA3 and 52AS Contact 11 (on the breaker). (6-B-401 223)

_____

_____
Verified

(2) Remove the jumper between Terminal TA4 and 52AS Contact 12 (on the breaker).

_____

_____
Verified

(3) Reconnect the TOC Switch.

_____

_____
Verified

b. At Emer Bus 1A-SA Cubicle 3, Breaker A for CCW Pump 1C-SAB perform the following:

(1) Remove the jumper between Terminal TA3 and 52AS Contact 11 (on the breaker). (6-B-401 943)

_____

_____
Verified

(2) Remove the jumper between Terminal TA4 and 52AS Contact 12 (on the breaker).

_____

_____
Verified

(3) Reconnect the TOC Switch.

_____

_____
Verified

7.3 A-SA Response Time Actuation (continued)

c. At Aux Bus 1A Cubicle 1A-6, Main Feedwater Pump 1A-NNS perform the following:

(1) Remove the jumper between Terminal TA7 and 52AS Contact 11 (on the breaker). (6-B-401 1801)

_____

_____
Verified

(2) Remove the jumper between Terminal TA8 and 52AS Contact 12 (on the breaker).

_____

_____
Verified

(3) Reconnect the TOC Switch.

_____

_____
Verified

d. At Aux Bus 1B Cubicle 1B-6, for the Main Feedwater Pump 1B-NNS.

(1) Remove the jumper between Terminal TA7 and 52AS Contact 11 (on the breaker). (6-B-401 1803)

_____

_____
Verified

(2) Remove the jumper between Terminal TA8 and 52AS Contact 12 (on the breaker).

_____

_____
Verified

(3) Reconnect the TOC Switch.

_____

_____
Verified

7.3 A-SA Response Time Actuation (continued)

52. Verify the following valves have shut:

a.	1AF-64, FEEDWATER A PREHEAT BYPASS	_____
b.	1AF-102, FEEDWATER B PREHEAT BYPASS	_____
c.	1AF-81, FEEDWATER C PREHEAT BYPASS	_____
d.	1FW-133, MAIN FW A REGULATOR	_____
e.	1FW-249, MAIN FW B REGULATOR	_____
f.	1FW-191, MAIN FW C REGULATOR	_____
g.	1FW-140, MAIN FW A REGULATOR BYPASS	_____
h.	1FW-256, MAIN FW B REGULATOR BYPASS	_____
i.	1FW-198, MAIN FW C REGULATOR BYPASS	_____
j.	1FW-307, MAIN FW A ISOLATION BYPASS ISOLATION	_____
k.	1FW-319, MAIN FW B ISOLATION BYPASS ISOLATION	_____
l.	1FW-313, MAIN FW C ISOLATION BYPASS ISOLATION	_____
m.	1FW-165, FW A HYDRAZINE ADD ISOL	_____
n.	1FW-281, FW B HYDRAZINE ADD ISOL	_____
o.	1FW-223, FW C HYDRAZINE ADD ISOL	_____
p.	1FW-163, FW A AMMONIA ADD ISOL	_____
q.	1FW-279, FW B AMMONIA ADD ISOL	_____
r.	1FW-221, FW C AMMONIA ADD ISOL	_____

53. Record the following levels:

a.	PRZ, LI-462	_____%	_____
b.	A Accum, LI-922	_____%	_____
c.	C Accum, LI-930	_____%	_____

7.4 A-SA Response Verification

NOTE: All steps in this section can be performed in parallel.

1. Record the equipment actuation times from the stopwatches on the following attachments:

   a. AFW Pump Press - Attachment 5 _____

   b. Charging/SI Pump A-SA Press - Attachment 7 _____

2. To re-enable the B Train of Safety Injection, in MTC-3B SB Panel 3 reconnect the W Wire (Cable 10094B-SB) to Terminal 21. (6-B-401 94)

   _____

   _____
   Verified

3. To reinstate the following Main Feedwater Pump Start Permissives in ARP-10, remove jumpers:

   - Booster Pump running
   - Low Suction Press
   - Suction valve open
   - Recirc valve open
   - Lube Oil Press

   a. In ARP-10 Row F2 between Terminals 41 and 98 (6-B-401 1851)

      _____

      _____
      Verified

   b. In ARP-10 Row R2 between Terminals 43 and 107

      _____

      _____
      Verified

4. To reinstate the Main Feedwater Pump Seal Water Permissive, remove the jumper in ARP-10 Row F2 between Terminals 107 and 108. (6-B-401 1851)

   _____

   _____
   Verified

7.4 A-SA Response Verification (continued)

5. To reinstate Main Feedwater Pump trips except SI, perform the following in ARP-10. (6-B-401 1852 and 1854)

AC 5/1

a. On Row R4:

(1) Remove jumper between the W Wire (Cable 11854G) lifted from Terminal 84 to Terminal 5 of Relay CR9/1854.

_____

_____
Verified

(2) Land the W Wire (Cable 11854G) to the field side of Terminal 84.

_____

_____
Verified

(3) Land Wires C1-5 and E1-5 R 3 that were lifted from Terminal 5 of Relay CR9/1854.

_____

_____
Verified

b. On Row F4:

(1) Remove jumper between the W Wire (Cable 11852G) lifted from Terminal 112 to Terminal 5 of Relay CR9/1852.

_____

_____
Verified

(2) Land the W Wire (Cable 11852G) to the field side of Terminal 112.

_____

_____
Verified

(3) Land Wires TB112 and F1 2 F1 that were lifted from Terminal 5 of Relay CR9/1852.

_____

_____
Verified

7.4 A-SA Response Verification (continued)

6. To re-enable the low SG Pressure Signals to the Main Feedwater Valves and Pumps, reconnect the following wires in ARP-9. (6-B-401 1845)

   a. On Row R2, from the W Wire (Cable 11845E) to Terminal 53

   _____

   _____ Verified

   b. On Row F4, from the W Wire (Cable 11845D) to Terminal 49

   _____

   _____ Verified

   c. On Row F2, from the W Wire (Cable 11845C) to Terminal 52

   _____

   _____ Verified

7. To simulate an RAB Normal Exhaust Fan start to the RAB Normal Exhaust Dampers, install the following jumpers: (6-B-401 3177)

   a. In ARP-2A(SA) Row R4, from Terminal 4 to 3

   _____

   b. In ARP-2B(SB) Row R4, from Terminal 92 to 91

   _____

8. To unblock the AFW Pump start on the trip of both Main Feedwater Pumps Signal reconnect wire K1 1 F3 to Terminal 5 of Relay CR12/1852 in ARP-10 Row F4. (6-B-401 1852)

   _____

   _____ Verified

7.4 A-SA Response Verification (continued)

9. To re-enable the Primary SI Start Signal to Emergency Diesel Generator A-SA, land the W Wire (Cable 11988W-SA) in SSP(A) Output Cabinet 1 to Terminal TB604-4. (6-B-401 1988)

_____

_____
Verified

10. To block the A Train SI Signal to the FW Pumps, in ARP-5 Row R1, lift and tape the W Wire (Cable 11337N) from the field side of Terminal 33. (6-B-401 1337)

_____

11. From the Sequence of Event Log, record the time of the Manual Safety Injection, computer point ZSI0095A in SOE cluster LOCA.

Time _____ _____

12. To verify proper actuation of Relay K620 SA, verify computer point ZTA1432E in SOE cluster SWYD indicates TRIP after the time recorded in Step 11.

_____

NOTE: The turn-on-codes for the Historic Digital and Analog Alarms reports are HDAL and HAAL. The start time of these logs should be 1 minute before the time in Step 11. The stop time of these logs should be 3 minutes later.

13. Retrieve the actuated times for the components on Attachments 3 through 9 from the historic alarm logs.

_____

14. On the Bypass Permissive Light Box, verify the SI ACTUATED RHR SUCTION WILL XFER ON RWST LO LO LEVEL indicator in ON.

_____

15. Perform the following to reset SI Suction Auto Switchover:

a. Turn SI SUCTION AUTO SWITCHOVER RESET TRAIN A to RESET.

_____

b. On the Bypass Permissive Status Light Box, verify off SI ACTUATED RHR SUCT WILL XFER ON LO-LO LEVEL.

_____

7.4 A-SA Response Verification (continued)

16. Verify the following Containment Fan Coolers have started in Low speed:

    a. AH-2 A-SA, FAN COOLER _____

    b. AH-2 B-SA, FAN COOLER _____

    c. AH-3 A-SA, FAN COOLER _____

    d. AH-3 B-SA, FAN COOLER _____

17. Verify the following fans tripped on the SI:

    a. AH-81 A, PRE-ENTRY PURGE SUPPLY FAN _____

    b. AH-82 A, NORMAL PURGE SUPPLY FAN _____

    c. E-5 A, CNMT PRE-ENTRY PURGE EXHAUST FAN _____

18. Verify open the following valves on AEP-1:

    a. 1SW-231 SAB, NNS CNMT FAN CLRS INLET ISOL _____

    b. 1SW-240 SA, NNS CNMT FAN CLRS OUTLET ISOL _____

    c. 1SW-242 SB, NNS CNMT FAN CLRS OUTLET ISOL _____

19. Start the following per OP-169:

    a. AH-37 A NNS, FAN COOLER _____

    b. AH-37 B NNS, FAN COOLER _____

    c. AH-38 A NNS, FAN COOLER _____

    d. AH-38 B NNS, FAN COOLER _____

    e. AH-39 A NNS, FAN COOLER _____

    f. AH-39 B NNS, FAN COOLER _____

20. Align the following Containment Fan Coolers to high speed:

    a. AH-1 A-SB, FAN COOLER _____

    b. AH-1 B-SB, FAN COOLER _____

    c. AH-4 A-SB, FAN COOLER _____

    d. AH-4 B-SB, FAN COOLER _____

7.4 A-SA Response Verification (continued)

21. Align the CNMT PRE-ENTRY PURGE FAN AH-81 B and EXHAUST FAN E-5 B for operation per OP-168. _____

22. Verify the following valves are open:

a. 1CP-7 SB, PRE-ENTRY PURGE ISOLATION _____

b. 1CP-1 SB, PRE-ENTRY PURGE ISOLATION _____

c. 1CP-10 SA, PRE-ENTRY PURGE ISOLATION _____

d. 1CP-4 SA, PRE-ENTRY PURGE ISOLATION _____

23. Open the following valves:

a. 1CP-9 SA, NORMAL PURGE INLET _____

b. 1CP-6 SB, NORMAL PURGE INLET _____

c. 1CP-5 SA, NORMAL PURGE DISCHARGE _____

d. 1CP-3 SB, NORMAL PURGE DISCHARGE _____

24. Open the following valves:

a. 1CH-125 SB, RETURN TO A-SA FROM NNS FANS _____

b. 1CH-116 SB, SUPPLY FROM A-SA TO NNS FANS _____

c. 1CH-148 SB, SUPPLY FROM B-SB TO NNS FANS _____

d. 1CH-196 SB, RETURN TO B-SB FROM NNS FANS _____

7.4 A-SA Response Verification (continued)

25. Verify that A Train Ventilation equipment has realigned as follows:

a. Control Room Ventilation:

(1)	AH-15 A-SA, NORMAL SUPPLY FAN	ON	_____
(2)	1CZ-1 SA, NORMAL INTAKE	SHUT	_____
(3)	1CZ-3, SA NORMAL EXHAUST	SHUT	_____
(4)	ES-1A, PURGE EXHAUST FAN	OFF	_____
(5)	CZ-13 SA, PURGE EXHAUST	SHUT	_____
(6)	1CZ-17 SA, PURGE MAKE UP	SHUT	_____
(7)	CZ-D16 SA, EMERGENCY FILTRATION RECIRC	OPEN	_____
(8)	R-2 A-SA, EMERGENCY FILTRATION FAN	ON	_____
(9)	1CZ-9 SA, EMER FILT OAI	SHUT	_____
(10)	1CZ-11 SA, EMER FILT OAI	SHUT	_____
(11)	1CZ-19 SA, EMER FILT DISCH	OPEN	_____
(12)	CZ-B21 SA, R-2 A OUTLET (SLB-5)	OPEN	_____
(13)	CZ-B23 SA, R-2 A INLET (SLB-5)	OPEN	_____
(14)	CZ-B25 SA, AH-15A DISCH (SLB-5)	OPEN	_____
(15)	E-9A, NORMAL EXHAUST FAN	OFF	_____

b. Electrical Equipment Protection Room Ventilation:

(1)	CZ-B5 SA, RAB ELEC EQUIP ROOM OAI PURGE ISOL	SHUT	_____
(2)	CZ-B7 SA, EXHAUST FAN DISCHARGE ISOL	SHUT	_____
(3)	E-10A-SA, NORMAL EXHAUST FAN	OFF	_____

7.4 A-SA Response Verification (continued)

c. Switch Gear Room Ventilation:

(1)	AC-D3 SA, SWGR RM OAI ISOL (SLB-11)	SHUT	_____
(2)	E-28 A-SA, BATTERY ROOM A EXHAUST FAN	OFF	_____
(3)	E-28 B-SA, BATTERY ROOM A EXHAUST FAN	OFF	_____
(4)	AC-D4 SA, BATTERY ROOM A RETURN DAMPER	OPEN	_____

d. Computer Room Ventilation:

(1)	R-13 (1&2A-NNS), EMER FAN	ON	_____
(2)	CK-B7-1&2, NORMAL INTAKE VLV	SHUT	_____
(3)	CK-B8-1&2, NORMAL INTAKE VLV	SHUT	_____
(4)	CK-D11-1&2, COMPUTER ROOM RTN DMPR	OPEN	_____
(5)	CK-D12-1&2, COMMUNICATION ROOM RTN DMPR	OPEN	_____
(6)	CK-D3-1&2, R-13 1&2A SUCTION DMPR	OPEN	_____
(7)	CK-D7-1&2, EMERGENCY INTAKE DMPR	OPEN	_____
(8)	AH-101, 305' OPERATIONS OFFICE AREA AHU.		
		OFF by Local Observation	_____

7.5 A-SA Post-test Restoration

NOTE: All steps in this section can be performed in parallel.

1. Locally restore the Thermal Overload Test Switch to the NORMAL position for the following valves:

   a. 3CZ-B3SA, 1A21-SA Cubicle 11B _____

   b. 3CZ-B9SA, 1A21-SA Cubicle 9A _____

   c. 3CZ-B11SA, 1A21-SA Cubicle 10A _____

   d. 3CZ-B1SA, 1A36-SA Cubicle 4B _____

   e. 3CZ-B13SA, 1A36-SA Cubicle 4C _____

   f. 3CZ-B17SA, 1A36-SA Cubicle 1B _____

   g. 3CZ-B19SA, 1A36-SA Cubicle 3E _____

   h. 3CZ-B21SA, 1A36-SA Cubicle 2C _____

   i. 3CZ-B23SA, 1A36-SA Cubicle 2B _____

   j. 3CZ-B25SA, 1A36-SA Cubicle 1D _____

2. Start the S-3 B RAB Normal Supply Fan per OP-172.

   _____

3. Locally place the following breakers to ON:

   a. MCC 1A31-SA Cubicle 10A,
   1CS-238 SA, Charging Line Isolation

   _____

   _____
   Verified

   b. MCC 1A31-SA Cubicle 5C,
   1SI-1 SA, Charging/SI Pumps to Boron Injection Tank.

   _____

   _____
   Verified

   c. MCC 1A31-SA Cubicle 4C,
   1SI-4 SA, Boron Injection Tank Outlet.

   _____

   _____
   Verified

7 6 1SI-1 Response Time

NOTE: All steps in this section must be performed in sequential order.

1. Prepare the following equipment for testing as indicated:

   a. 1CS-214, CHARGING/SI PUMPS MINIFLOW ISOL — OPEN _____

   b. 1SI-1, CHARGING/SI PUMPS TO BORON INJECTION TANK — SHUT _____

   c. 1SI-3, BORON INJECTION TANK OUTLET ISOLATION — SHUT _____

   d. 1SI-4, BORON INJECTION TANK OUTLET ISOLATION — SHUT _____

   e. Emergency Diesel Generator A-SA prepared for startup per OP-155.

      _____

   f. MCC 1A21-SA Cubicle 3D, 1SI-248, C Accumulator Breaker

      OPEN _____

CAUTION

60 gpm charging flow should be maintained to prevent dead-heading the CSIP when 1CS-214 is shut in step 6 below.

---

2. Establish communications between operators at the following locations:

   - Main Control Room
   - Emergency Diesel Generator A-SA
   - Safeguards Test Cabinet

   _____

3. Station an operator with a stopwatch to determine the response time of 1SI-1, CHARGING/SI PUMPS TO BORON INJECTION TANK ISOLATION.

   _____

4. Verify that Emergency Diesel Generator A-SA is Barred and Prelubed per OP-155.

   _____

7.6 1SI-1 Response Time (continued)

5. Open the Protection System Safeguards Test Train A Cabinet 2 Door and with the Shift Supervisor - Nuclear approval, start slave relay testing.

_____

6. Simultaneously start the stopwatch while energizing Slave Relay K601 by turning Switch S907 clockwise then depressing momentarily.

_____

7. Stop the stopwatch when 1SI-1, CHARGING/SI PUMPS TO BORON INJECTION TANK ISOLATION indicates full open and record the time on Attachment 7.

_____

8. Verify the following equipment repositions as indicated:

   a. 1CS-214, CHARGING/SI PUMPS MINIFLOW ISOL — SHUT _____

   b. EMERGENCY DIESEL GENERATOR A-SA — RUNNING _____

9. At Protection System Safeguards Test Train A Cabinet 2 position Reset Switch S921 to RESET.

_____

10. Realign the following valves as indicated:

   a. 1CS-214, CHARGING/SI PUMPS MINIFLOW ISOL — OPEN _____

   b. 1SI-1, CHARGING/SI PUMPS TO BORON INJECTION TANK — SHUT _____

11. After 5 minutes, secure EMERGENCY DIESEL GENERATOR A-SA per OP-155.

_____

7.7 1SI-4 Response Time

NOTE: All steps in this section must be performed in sequential order.

1. Prepare the following equipment for testing as follows:

a.	1CS-238, CHARGING LINE ISOLATION	OPEN	_____
b.	1SI-4, BORON INJECTION TANK OUTLET	SHUT	_____
c.	1SI-1, CHARGING/SI PUMPS TO BORON INJECTION TANK	SHUT	_____
d.	1SI-2, CHARGING/SI PUMPS TO BORON INJECTION TANK	SHUT	_____
e.	1CZ-1 SA, NORMAL INTAKE	OPEN	_____
f.	ES-7 (1&2X-NNS), SMOKE PURGE EXHAUST FAN	ON	_____
g.	CK-B6 (1&2) SMOKE PURGE INTAKE VALVE	OPEN	_____
h.	Verify open 1CS-214, CHARGING/SI PUMPS MINIFLOW ISOL	OPEN	_____
i.	Verify open 1CS-210, CHARGING/SI PUMP A-SA MINIFLOW ISOL	OPEN	_____

2. Establish communications between operators in the Main Control Room and at the Safeguards Test Cabinet.

_____

3. Station personnel with stopwatches to determine the response time of the following equipment:

- 1CS-238, CHARGING LINE ISOLATION
- 1SI-4, BORON INJECTION TANK OUTLET.

_____

4. Open the Protection System Safeguards Test Train A Cabinet 2 Door and with the Shift Supervisor - Nuclear approval, start slave relay testing.

_____

7.7 1SI-4 Response Time (continued)

NOTE: The following step will initiate a Control Room Isolation signal.

5. Simultaneously start the stopwatches while energizing Slave Relay K603 by turning Test Switch S909 clockwise then depressing momentarily.

_____

6. Perform the following:

   a. Stop the stopwatches when 1CS-238 indicates full shut and 1SI-4 indicates full open respectively and record on Attachment 7.

   _____

   b. Verify CZ-B1 SA, NORMAL INTAKE SHUT _____

   c. ES-7 (1&2X-NNS) SMOKE PURGE EXHAUST FAN OFF _____

   d. CK-B6 (1&2) SMOKE PURGE INTAKE VALVE SHUT _____

7. At Protection System Safeguards Test Train A Cabinet 2 position Reset Switch S921 to RESET.

   _____

8. Reset the Control Room Isolation Signal.

   _____

9. Realign the following valves as indicated:

   a. 1CS-238, CHARGING LINE ISOLATION OPEN _____

   b. 1SI-4, BORON INJECTION TANK OUTLET SHUT _____

7.8 1SI-2 Actuation

NOTE: All steps in this section must be performed in sequential order.

1. Prepare the following equipment for testing:

   a. 1CS-182, CHARGING/SI A-SA MINIFLOW ISOL — OPEN _____

   b. 1SI-2, CHARGING/SI PUMPS TO BORON INJECTION TANK — SHUT _____

   c. 1SI-3, BORON INJECTION TANK OUTLET — SHUT _____

   d. 1SI-4, BORON INJECTION TANK OUTLET — SHUT _____

   e. Emergency Diesel Generator B-SB prepared for startup per OP-155.

   _____

CAUTION

60 gpm charging flow should be maintained to prevent dead-heading the CSIP when Mini Flow is isolated in step 5 below.

---

2. Establish communications between operators at the following locations:

   - Main Control Room
   - Emergency Diesel Generator B-SB
   - Safeguards Test Cabinet

   _____

3. Open the Protection System Safeguards Test Train B Cabinet 2 Door and with the Shift Supervisor - Nuclear approval, start slave relay testing.

   _____

4. Verify that Emergency Diesel Generator B-SB is Barred and Prelubed per OP-155.

   _____

5. Energize Slave Relay K601 by turning Switch S907 clockwise then depressing.

   _____

7.8 1SI-2 Actuation (continued)

6. Verify the following equipment realigned as indicated:

   a. 1CS-182, CHARGING/SI PMP A-SA MINIFLOW ISOL — SHUT _____

   b. EMERGENCY DIESEL GENERATOR B-SB — RUNNING _____

   c. 1SI-2, CHARGING/SI PUMPS TO BORON INJECTION TANK — OPEN _____

7. At Protection System Safeguards Test Train B Cabinet 2, position Reset Switch S921 to RESET.

   _____

8. Realign the following valves as indicated:

   a. 1SI-2, CHARGING/SI PUMPS TO BORON INJECTION TANK — SHUT _____

   b. 1CS-182, CHARGING/SI PMP A-SA MINIFLOW ISOL — OPEN _____

9. After 5 minutes, secure Emergency Diesel Generator B-SB per OP-155.

   _____

7.9 1SI-3 Actuation

NOTE: All steps in this section must be performed in sequential order.

1. Prepare the following equipment for testing as indicated.

a.	1CS-235, CHARGING LINE ISOL	OPEN	_____
b.	1SI-3, BORON INJECTION TANK OUTLET	SHUT	_____
c.	1SI-1, CHARGING/SI PUMPS TO BORON INJECTION TANK	SHUT	_____
d.	1SI-2, CHARGING/SI PUMPS TO BORON INJECTION TANK	SHUT	_____
e.	1BD-1, SG 1A-SN BLOWDOWN ISOLATION	OPEN	_____
f.	R-13 (1&2B-NNS), EMERG FAN	OFF	_____
g.	Verify open 1CS-214, CHARGING/SI PUMPS MINIFLOW ISOL	OPEN	_____
h.	Verify open 1CS-210, CHARGING/SI PUMP A-SA MINIFLOW ISOL	OPEN	_____

AC S/I

AC S/I

2. Establish communications between operators in the Main Control Room at the Safeguards Test Cabinet.

_____

3. Open the Protection System Safeguards Test Train B Cabinet 2 Door and with the Shift Supervisor - Nuclear approval, start slave relay testing.

_____

NOTE: The following step will initiate a Control Room Isolation Signal.

4. Energize Slave Relay K603 by turning Test Switch S909 clockwise then depressing.

_____

7.9 1SI-3 Actuation (continued)

5. Verify the following equipment repositions as follows:

a.	1CS-235, CHARGING LINE ISOL	SHUT	_____
b.	1SI-3, BORON INJECTION TANK OUTLET	OPEN	_____
c.	1BD-1, SG 1A-SN BLOWDOWN ISOLATION	SHUT	_____ AC S/I
d.	Verify R-13 (1&2B-NNS), EMERG FAN	ON	_____

6. At Protection System Safeguards Test Train B Cabinet 2, position Reset Switch S921 to RESET. AC S/I

_____

7. Realign the following valves as indicated:

a.	1CS-235, CHARGING LINE ISOL	OPEN	_____
b.	1SI-3, BORON INJECTION TANK OUTLET	SHUT	_____
c.	1BD-1, SG 1A-SN BLOWDOWN ISOLATION	OPEN	_____ AC S/I

7.10 SA and SB Pretest Verification

NOTE: All steps in this section can be performed in parallel except as noted.

1. Align A Train ESW Header with Normal Service Water per OP-139. _____

2. Stop ESW Pump A-SA per OP-139. _____

3. Stop ESW Pump B-SB per OP-139. _____

4. Verify the alignment of A and B Train ESW Valves for testing as follows:

a.	1SW-39, NORMAL SW TO HEADER A	OPEN	_____
b.	1SW-275, HEADER A TO NORMAL HEADER	OPEN	_____
c.	1SW-276, HEADERS A & B RETURN TO NORMAL SW HEADER	OPEN	_____
d.	1SW-179, HEADER A TO CVCS CHILLERS	OPEN	_____
e.	1SW-206, SW FROM CVCS CHILLERS TO HEADER A	OPEN	_____
f.	1SW-40, NORMAL SW SUPPLY TO HEADER B	OPEN	_____
g.	1SW-274, HEADER B TO NORMAL HEADER	OPEN	_____
h.	1SW-180, HEADER B TO CVCS CHILLERS	OPEN	_____
i.	1SW-204, SW FROM CVCS CHILLERS TO HEADER B	OPEN	_____
j.	1SW-270, HEADER A TO AUXILIARY RESERVOIR	SHUT	_____
k.	1SW-271, HEADER B TO AUXILIARY RESERVOIR	SHUT	_____

7.10 SA and SB Pretest Verification (continued)

5. Verify the following ESW components are off:

a.	A-SA ESW SCREEN WASH PUMP	OFF	_____
b.	B-SA ESW SCREEN WASH PUMP	OFF	_____
C.	AUX RSVR A-SA ESW TRAV SCRN	OFF	_____
d.	AUX RSVR B-SB ESW TRAV SCRN	OFF	_____

6. Prepare the following equipment for testing as indicated:

a.	1CS-196, CHARGING/SI PMP B-SB MINIFLOW ISOL	OPEN	_____
b.	1CS-210, CHARGING/SI PMP C-SAB MINIFLOW ISOLATION	OPEN	_____
c.	1SI-246, MCC 1A21-SA Cubicle 5C	CLOSED	_____
d.	1SI-246, ACCUMULATOR A DISCHARGE	SHUT	_____
e.	1SI-247, MCC 1B21-SB Cubicle 5C	CLOSED	_____
f.	1SI-247, ACCUMULATOR B DISCHARGE	SHUT	_____
g.	1SI-248, MCC 1A21-SA Cubicle 3D	CLOSED	_____
h.	1SI-248, ACCUMULATOR C DISCHARGE	SHUT	_____
i.	1SP-224, STM GEN C SHELL SAMPLE ISOL	OPEN	_____
j.	1SP-226, STM GEN C TUBESHEET SAMPLE ISOL	OPEN	_____
k.	1SP-227, STM GEN C SAMPLE CNMT ISOL	OPEN	_____
l.	1BD-1, SG 1A-SN BLOWDOWN ISOLATION	OPEN	_____
m.	1BD-11, SG 1A-SN BLOWDOWN ISOLATION	OPEN	_____
n.	LCV-459, LETDOWN ISOLATION	OPEN	_____
o.	LCV-460, LETDOWN ISOLATION	OPEN	_____
p.	1CS-7, 45 GPM LETDOWN ORIFICE A	OPEN	_____
q.	1CS-8, 60 GPM LETDOWN ORIFICE B	OPEN	_____
r.	1CS-9, 60 GPM LETDOWN ORIFICE C	OPEN	_____
s.	1CB-2, VACUUM RELIEF	OPEN	_____

7.10 SA and SB Pretest Verification (continued)

NOTE: Phase A Isolation will isolate 1FP-347 CNMT sprinkler water.

7. Before initiating the SI signal, ensure the On Shift Fire Tech has been notified.

_____

8. To stop the BIT Valves from opening on the SIAS and to stop the Charging Line Isolation Valves from shutting, locally open the following breakers:

   a. MCC 1A31-SA Cubicle 10A, 1CS-238 SA, Charging Line Isolation

   _____

   b. MCC 1A31-SA Cubicle 5C, 1SI-1 SA, Charging/SI Pumps to Boron Injection Tank

   _____

   c. MCC 1A31-SA Cubicle 4C, 1SI-4 SA, Boron Injection Tank Outlet

   _____

   d. MCC 1B31-SB Cubicle 10A, 1CS-235 SB, Charging Line Isolation

   _____

   e. MCC 1B31-SB Cubicle 5C, 1SI-2 SB, Charging/SI Pumps to Boron Injection Tank

   _____

   f. MCC 1B31-SB Cubicle 4C, 1SI-3 SB, Boron Injection Tank Outlet

   _____

9. To prevent an auto start, locally place Emergency Diesel Generator A-SA in the MAINTENANCE mode as follows:

   a. At the Emergency Diesel Generator GCP place the Control Transfer Switch in LOCAL.

   _____

   b. At the Emergency Diesel Generator ECP place the Operational/Maintenance Selector Switch in MAINTENANCE.

   _____

7.10 SA and SB Pretest Verification (continued)

NOTE: The back up SI Signal and UV to the EDG will remain operable after the next step.

10. To block the primary SI start signal to the B-SB EDG, lift and tape the W Wire (Cable 12008F-SB) from the field side of TB604 Terminal 4 in SSP(B) Output Cabinet 1. (6-B-401 2008)

_____

11. Have electricians and an operator perform the following:

a. At Emer Bus 1B-SB Cubicle 7, B-SB Breaker for Charging/Safety Injection Pump 1C-SAB perform the following:

(1) Open the Control Power Switch.

_____

(2) Defeat the TOC Switch.

_____

(3) Position the breaker to test.

_____

(4) Shut the Control Power Switch.

_____

b. At Emer Bus 1B-SB, Cubicle 2, B-SB Breaker for Component Cooling Water Pump 1C-SAB perform the following:

(1) Open the Control Power Switch.

_____

(2) Defeat the TOC Switch.

_____

(3) Position the breaker to test.

_____

(4) Shut the Control Power Switch.

_____

7.10 SA and SB Pretest Verification (continued)

11a. To block the A Train Feedwater Isolation signal (FWIS) to the valves listed below, perform the following

a. Install a jumper in SSP(A) Output Cabinet 1 between terminals 631-5 and 631-6 to block the FWIS to 1FW-249, MAIN FW B REGULATOR. (6-B-401 802)

_____

b. Install a jumper in SSP(A) Output Cabinet 1 between terminals 655-3 and 655-4 to block the FWIS to 1FW-256, MN FW B REG BYP. (6-B-401 805)

_____

c. Lift and tape the W Wire (Cable 11827C-SA) from the field side of Terminal TB 614-6 in SSP(A) Output Cabinet 1 to block the MFIS to 1FW-307, MAIN FW A ISOLATION BYPASS ISOLATION. (6-B-401 1827)

_____ AC 5/11

d. Lift and tape the W Wire (Cable 11830M-SA) from the field side of Terminal TB 627-10 in SSP(A) Output Cabinet 1 to block the MFIS to 1FW-159, MAIN FW A ISOLATION. (6-B-401 1830)

_____

11b. Open the following valves:

a. 1FW-249, MAIN FW B REGULATOR _____

b. 1FW-256, MN FW B REG BYP _____

c. 1FW-307, MAIN FW A ISOLATION BYPASS ISOLATION _____

d. 1FW-159, MAIN FW A ISOLATION _____

AC 5/11

7.10 SA and SB Pretest Verification (continued)

12. At the MCB, verify the following:

a.	BREAKER B FOR CHARGING/SI PUMP C-SAB	OPEN _____
b.	BREAKER B FOR CCW C-SAB	OPEN _____

13. Align the B Train of the Control Room HVAC for smoke purge per OP-173.

_____

14. To ensure AH-15 B-SB starts on an SI signal, perform the following:

a. Start AH-15 A-SA, NORMAL SUPPLY FAN

_____

b. Stop AH-15 B-SB, NORMAL SUPPLY FAN

_____

15. Verify the alignment of Control Room HVAC for testing as follows:

a.	1CZ-2 SB, NORMAL INTAKE	OPEN _____
b.	1CZ-4 SB, NORMAL EXHAUST	OPEN _____
c.	CZ-B26 SB, AH-15 B DISCH (SLB-6)	SHUT _____
d.	CZ-B24 SB, R-2 B INLET (SLB-6)	SHUT _____
e.	CZ-B22 SB, R-2 B OUTLET (SLB-6)	SHUT _____
f.	1CZ-18 SB, PURGE MAKEUP	OPEN _____
g.	1CZ-12 SB, EMER FILT OAI	OPEN _____
h.	1CZ-20 SB, EMER FILT DISCH	SHUT _____
i.	CZ-D11 SB, EMERGENCY FILTRATION RECIRC	SHUT _____
j.	1CZ-14 SB, PURGE EXHAUST	OPEN _____
k.	1CZ-10 SB, EMER FILT OAI	OPEN _____
l.	R-2 B-SB, EMERGENCY FILTRATION FAN	OFF _____
m.	ES-1B, PURGE EXHAUST FAN	ON _____
n.	E-9B, NORMAL EXHAUST FAN	ON _____

7.10 SA and SB Pretest Verification (continued)

NOTE: • This step will cause a white overload indication on the MCB and deactivate the MCB Control Switch. These valves will still respond to a Control Room Isolation Signal.

• The Thermal Overload Test Switch for the following valves must be placed in the TEST position after the valve is aligned as required in Step 15.

16. Locally place the Thermal Overload Test Switch to the TEST position for the following valves:

a. 3CZ-B4 SB, MCC 1B21-SB Cubicle 5A _____

b. 3CZ-B10 SB, MCC 1B21-SB Cubicle 1E _____

c. 3CZ-B12 SB, MCC 1B21-SB Cubicle 3C _____

d. 3CZ-B14 SB, MCC 1B36-SB Cubicle 1D _____

e. 3CZ-B2 SB, MCC 1B36-SB Cubicle 4A _____

f. 3CZ-B18 SB, MCC 1B36-SB Cubicle 4C _____

g. 3CZ-B20 SB, MCC 1B36-SB Cubicle 1B _____

h. 3CZ-B22 SB, MCC 1B36-SB Cubicle 2C _____

i. 3CZ-B24 SB, MCC 1B36-SB Cubicle 2B _____

j. 3CZ-B26 SB, MCC 1B36-SB Cubicle 5C _____

17. Align the Train A Ventilation for testing as follows:

a. Verify the Electrical Equipment Protection Room Ventilation A Train in service per OP-172, Section 5.4.

_____

b. Perform the following:

(1) CZ-B6 SB, RAB ELEC EQUIP ROOM OAI PURGE ISOL OPEN _____

(2) CZ-B8 SB, EXHAUST FAN DISCHARGE ISOL OPEN _____

(3) E-10 B-SB, NORMAL EXHAUST FAN ON _____

c. Align Switchgear Room Ventilation A Train per OP-172, Section 5.5.

_____

7.10 SA and SB Pretest Verification (continued)

d. Align the following equipment as listed:

(1)	AC-D5 SB, SWGR RM OAI ISOL (SLB-9)	OPEN	_____
(2)	E-29 A-SB, BATTERY ROOM B EXHAUST FAN	ON	_____
(3)	E-29 B-SB, BATTERY ROOM B EXHAUST FAN	ON	_____
(4)	AC-D6 SB, BATTERY ROOM B RETURN DAMPER	SHUT	_____

18. Stop the E-6 A-SA, EMERGENCY EXHAUST FAN. _____

19. At AEP-1 on SLB-8, Safeguards Terminal, or the ERFIS Computer, verify open the following RAB Normal Exhaust Dampers:

AC 511

a. AV-D4 SB-1 or ZAV3152C _____

b. AV-D30 SB-1 or ZAV3158C _____

c. AV-D6 SB-1 or ZAV3152A _____

d. AV-D8 SB-1 or ZAV3153C _____

e. AV-D10 SB-1 or ZAV3153A _____

f. AV-D12 SB-1 or ZAV3154C _____

g. AV-D14 SB-1 or ZAV3154A _____

h. AV-D16 SB-1 or ZAV3155C _____

i. AV-D18 SB-1 or ZAV3155A _____

j. AV-D20 SB-1 or ZAV3156C _____

k. AV-D22 SB-1 or ZAV3156A _____

l. AV-D24 SB-1 or ZAV3157A _____

m. AV-D28 SB-1 or ZAV3158A _____

n. AV-D26 SB-1 or ZAV3157C _____

o. AV-D32 SB-1 or ZAV3159A _____

p. AV-D38 SB-1 or ZAV3160C _____

7.10 SA and SB Pretest Verification (continued)

q. AV-D34 SB-1 or ZAV3159C _____

r. AV-D36 SB-1 or ZAV3160A _____

s. AV-D53 SB-1 or ZAV3161A _____

t. AV-D59 SB-1 or ZAV3161C _____

u. AV-D63 SB-1 or ZAV3162A _____

v. AV-D67 SB-1 or ZAV3162C _____

w. AV-D71 SB-1 or ZAV3163A _____

x. AV-D75 SB-1 or ZAV3163C _____

y. AV-D87 SB-1 or ZAV3165A _____

z. AV-D83 SB-1 or ZAV3164C _____

aa. AV-D79 SB-1 or ZAV3164A _____

20. At AEP-1 on SLB-10, Safeguards Terminal, or the ERFIS computer, verify open the following RAB Normal Exhaust Dampers: AC 5/11

a. AV-D3SA-1 or ZAV3131C _____

b. AV-D5SA-1 or ZAV3131A _____

c. AV-D7SA-1 or ZAV3132C _____

d. AV-D9SA-1 or ZAV3132A _____

e. AV-D11SA-1 or ZAV3133C _____

f. AV-D13SA-1 or ZAV3133A _____

g. AV-D15SA-1 or ZAV3134C _____

h. AV-D17SA-1 or ZAV3134A _____

i. AV-D19SA-1 or ZAV3135C _____

j. AV-D21SA-1 or ZAV3135A _____

k. AV-D23SA-1 or ZAV3136A _____

l. AV-D25SA-1 or ZAV3136C _____

m. AV-D27SA-1 or ZAV3137A _____

n. AV-D29SA-1 or ZAV3137C _____

7.10 SA and SB Pretest Verification (continued)

o. AV-D31SA-1 or ZAV3138A _____

p. AV-D33SA-1 or ZAV3138C _____

q. AV-D35SA-1 or ZAV3139A _____

r. AV-D37SA-1 or ZAV3139C _____

s. AV-D52SA-1 or ZAV2140A _____

t. AV-D58SA-1 or ZAV3140C _____

u. AV-D62SA-1 or ZAV3141A _____

v. AV-D66SA-1 or ZAV3141C _____

w. AV-D70SA-1 or ZAV3142A _____

x. AV-D74SA-1 or ZAV3142C _____

y. AV-D78SA-1 or ZAV3143A _____

z. AV-D82SA-1 or ZAV3143C _____

aa. AV-D86SA-1 or ZAV3144A _____

21. Stop the following fans:

a. AH-5 A-SA, CSP & RHR PUMPS A-SA FAN COOLER _____

b. AH-5 B-SB, CSP & RHR PUMPS B-SB FAN COOLER _____

c. AH-6 A-SA, CCW PUMP AREA FAN COOLER _____

d. AH-6 B-SB, CCW PUMP AREA FAN COOLER _____

e. AH-7 A-SA, CCW PUMP AREA FAN COOLER _____

f. AH-7 B-SB, CCW PUMP AREA FAN COOLER _____

g. AH-8 X-SB, SW BSTR PUMP AREA FAN COOLER _____

h. AH-9 A-SA, CSIP SA AREA FAN COOLER _____

i. AH-9 B-SB, CSIP SB AREA FAN COOLER _____

j. AH-10 A-SA, CSIP SAB AREA FAN COOLER _____

k. AH-10 B-SB, CSIP SAB AREA FAN COOLER _____

l. AH-11 A-SA, 236' RAB MECH PENET AREA FAN COOLER _____

7.10 SA and SB Pretest Verification (continued)

m. AH-11 B-SB, 236' RAB MECH PENET AREA FAN COOLER _____

n. AH-12 A-SA, RAB SWGR ROOM A SUPPLY FAN _____

o. AH-13 A-SB, RAB SWGR ROOM B SUPPLY FAN _____

p. AH-16 A-SA, SUPPLY FAN _____

q. AH-16 B-SB, SUPPLY FAN _____

r. AH-19 A-SA, AFWP & HVAC CHILLER FAN COOLER _____

s. AH-19 B-SB, AFWP & HVAC CHILLER FAN COOLER _____

t. AH-20 A-SA, AFWP & HVAC CHILLER FAN COOLER _____

u. AH-20 B-SB, AFWP & HVAC CHILLER FAN COOLER _____

v. AH-23 X-SA, RHT AREA FAN COOLER _____

w. AH-25 X-SB, AREA FAN COOLER _____

x. AH-24 X-SA, SA AREA FAN COOLER _____

y. AH-26 A-SA, HVAC EQUIP ROOM 2 FAN COOLER _____

z. AH-26 B-SB, HVAC EQUIP ROOM 1 FAN COOLER _____

aa. AH-28 A-SA, 216' RAB MECH PENET AREA FAN COOLER _____

ab. AH-28 B-SB, BIT AREA FAN COOLER _____

ac. AH-29 X-SB, WPB MCC & INST RACK FAN COOLER _____

ad. AH-92 A-SA, MCC A35 FAN COOLER _____

ae. AH-92 B-SB, MCC B35 FAN COOLER _____

af. AH-93 X-SA, ROD CONTROL CABINET FAN COOLER _____

ag. AH-85 A-SA, ELEC EQUIP ROOM SUPPLY FAN _____

ah. AH-85 C-SB, ELEC EQUIP ROOM SUPPLY FAN _____

ai. S-64 X-SA, STEAM SUPPLY TUNNEL FAN _____

aj. S-65 X-SB, STEAM TUNNEL SUPPLY FAN _____

22. Open 1RC-144, PRT N_2 ISOL. _____

7.10 SA and SB Pretest Verification (continued)

23. Stop Water Chiller Compressor WC-2 B-SB per OP-148.

_____ AC S/I

24. To prevent the B CCW Pump from starting on low pressure, locally Shut 1CC-112, PT-650 Root Isolation, .

_____

7.11 SA and SB Equipment Actuation

NOTE: All steps in this section must be performed in sequential order.

1. Using OST-1119 Section 7.1 as a guide, start Containment Spray Pump B-SB on recirculation flow.

_____

2. Using the Safeguards Terminal Depress Key F6, PRINT STATUS OF ALL INPUTS TO ALL GROUPS.

_____

3. Verify that Emergency Diesel Generator B-SB is Barred and Prelubed per OP-155.

_____

4. Start AH-82 B, NORMAL PURGE SUPPLY FAN.

_____

5. Stop CSIP B-SB and let it coast to a stop.

_____

6. Before initiating the SI signal, ensure the on Shift Fire Tech has been notified that 1FP-347, CNMT SPRINKLER ISOL WTR SUP ISOL will be shut.

_____

7. Stop RHR Pump B-SB.

_____

8. Stop CCW Pump B-SB.

_____

CAUTION

60 gpm charging flow should be maintained to prevent dead-heading the CSIP when Mini Flow is isolated.

---

9. Announce the test start to personnel involved in testing operations.

_____

7.11 SA and SB Equipment Actuation (continued)

NOTE: There is a 60 second delay from SI initiation before the signal can be reset.

10. At MCB Section A (CVCS), position the SAFETY INJECTION ACTUATION Switch to ACTUATE.

_____

11. By the absence of the CONTAINMENT FAN COOLERS LOW FLOW O/L or CONTAINMENT FAN CLRS NOT STARTED ON SIS alarms on ALB-027 or ALB-029, verify each containment fan cooler started.

_____

11a. On the Bypass Permissive Light Box, verify the SI ACTUATED window is lit. (not blinking) AC S/I

_____

12. Perform the following on the ERFIS Computer:

a. Using the Safeguards Terminal depress key F6, PRINT STATUS OF ALL INPUTS TO ALL GROUPS to provide a hard copy for equipment verification on Attachment 11.

_____

NOTE: HDAL and HAAL should be used from 1 minute before the SI until 3 minutes after the SI actuation.

b. Retrieve the Historic Alarm Logs using computer turn on codes HDAL and HAAL for equipment verification.

_____

NOTE: Resetting SI will allow Area Fan Coolers to return to the temperature control mode and RAB Normal Exhaust Dampers to open.

13. Reset the following signals:

a. Safety Injection Signal _____

b. Phase A Isolation Signal _____

c. Feedwater Isolation Signal _____

d. Control Room Ventilation Isolation Signal _____

e. Containment Ventilation Isolation Signal _____

7.11 SA and SB Equipment Actuation (continued)

14. Perform the following:

a. Check that Bus 1A1 is de-energized. _____

b. Check that Bus 1B1 is de-energized. _____

c. Re-energize Bus 1A1. _____

d. Re-energize Bus 1B1. _____

AC
S/1

7.11 SA and SB Equipment Actuation (continued)

NOTE: The following step also verifies proper circuit continuity to Slave Relays K601 SA and SB.

15. Verify that CSIP B-SB has started. _____

16. Verify that the following valves have shut:

    a. 1CS-214, CHARGING/SI PUMPS MINIFLOW ISOL _____

    b. 1CS-182, CHARGING/SI PMP A-SA MINIFLOW ISOL _____

    c. 1CS-196, CHARGING/SI PMP B-SB MINIFLOW ISOL _____

    d. 1CS-210, CHARGING/SI PMP C-SAB MINIFLOW ISOL _____

17. Open the following valves:

    a. 1CS-214, CHARGING/SI PUMPS MINIFLOW ISOL _____

    b. 1CS-182, CHARGING/SI PMP A-SA MINIFLOW ISOL _____

    c. 1CS-196, CHARGING/SI PMP B-SB MINIFLOW ISOL _____

    d. 1CS-210, CHARGING/SI PMP C-SAB MINIFLOW ISOL _____

18. Verify that the following valves have opened:

    a. 1CS-746, CHARGING/SI PUMP A-SA ALTERNATE MINIFLOW _____

    b. 1CS-752, CHARGING/SI PUMP B-SB ALTERNATE MINIFLOW _____

19. Shut the following valves:

    a. 1CS-746, CHARGING/SI PUMP A-SA ALTERNATE MINIFLOW _____

    b. 1CS-752, CHARGING/SI PUMP B-SB ALTERNATE MINIFLOW _____

20. Verify that the following valves have shut:

    a. LCV-115C, VCT OUTLET (1CS-165) _____

    b. LCV-115E, VCT OUTLET (1CS-166) _____

21. Open the following valves:

    a. LCV-115C, VCT OUTLET (1CS-165) _____

    b. LCV-115E, VCT OUTLET (1CS-166) _____

7.11 SA and SB Equipment Actuation (continued)

NOTE: Slave Relays K601 SA and SB were verified as part of Step 15.

26. To verify proper circuit continuity to the slave relays, verify the following actuations:

    a. For K603 SA, 1CZ-B1 SA, NORMAL INTAKE SHUT _____

    b. For K603 SB, 1BD-1, SG 1A-SN BLOWDOWN ISOLATION SHUT _____

AC 5/1

27. Calculate the required discharge pressure for B-SB Motor Driven AFW Pump.

    _____ + 1514 psig = _____ psig
    PI-2250A1 SB

    _____

    _____
    Verified

28. Verify B-SB Motor Driven AFW Pump has started and developed a discharge pressure greater than or equal to the value calculated in Step 27 with a recirculation flow of 50 - 60 gpm.

    _____

29. Verify both MDAFW pumps automatically started then, secure the MDAFW Pumps, per OP-137 Section 8.3.

    _____

30. Verify the following fans tripped on the SI:

    a. AH-81 B, PRE-ENTRY PURGE SUPPLY FAN _____

    b. AH-82 B, NORMAL PURGE SUPPLY FAN _____

    c. E-5 B, CNMT PRE-ENTRY PURGE EXHAUST FAN _____

31. Verify VCT Makeup is set for greater than or equal to the present RCS Boron concentration.

    _____

32. Verify RHR Pump B-SB started on the SIAS and stop it if desired.

    _____

33. Verify Emergency Diesel Generator B-SB automatically started on the SIAS and has operated for 5 minutes in standby.

    _____

7.11 SA and SB Equipment Actuation (continued)

34. Shutdown Emergency Diesel Generator B-SB using OP-155.

_____

35. To restore power to the following valves, locally place the following breakers ON:

a. MCC 1A31-SA Cubicle 4C
1SI-4 SA, Boron Injection Tank Outlet

_____

_____ Verified

b. MCC 1A31-SA Cubicle 5C
1SI-1 SA, Charging/SI Pumps to Boron Injection Tank

_____

_____ Verified

c. MCC 1A31-SA Cubicle 10A
1CS-238 SA, Charging Line Isolation

_____

_____ Verified

d. MCC 1B31-SB Cubicle 4C
1SI-3 SB, Boron Injection Tank Outlet

_____

_____ Verified

e. MCC 1B31-SB Cubicle 5C
1SI-2 SB, Charging/SI Pumps to Boron Injection Tank

_____

_____ Verified

f. MCC 1B31-SB Cubicle 10A
1CS-235 SB, Charging Line Isolation

_____

_____ Verified

7.11 SA and SB Equipment Actuation (continued)

35a. To restore power to the following valves, locally place the following breakers ON:

a. MCC 1B21-SB Cubicle 6A, 1CT-102 SB CNMT Sump to CNMT Spray Pump B-SB.

_____

_____
Verified

AC 5/11

b. MCC 1A21-SA Cubicle 8C, 1CT-105 SA CNMT Sump to CNMT Spray Pump A-SA.

_____

_____
Verified

36. At Emergency Diesel Generator A-SA ECP, place the Operational/Maintenance Selector Switch to OPERATE.

_____

_____
Verified

37. At the Emergency Diesel Generator A-SA GCP, place the Control Transfer Switch in REMOTE.

_____

_____
Verified

38. To re-enable the B CCW Pump low pressure start, locally open 1CC-112, PT-650 Root Isolation.

AC 5/11

_____

_____
Verified

7.12 Phase A Actuations

NOTE: All steps in this section must be performed in sequential order.

CAUTION

Charging flow should be maintained greater than 60 gpm to prevent dead-heading the CSIP when normal CSIP mini flow is isolated.

---

1. To block the phase A isolation signal to 1IA-819, install a jumper in the back of SSP(A) Output Cabinet 1 from Terminal TB618-7 to TB618-8. (6-B-401 2458)

_____

2. Before initiating the Phase A Isolation Signal, ensure the on Shift Fire Tech has been notified that 1FP-347, CNMT SPRINKLER ISOL WTR SUP ISOL will be shut.

_____

3. At MCB Section A, Initiate a CNMT Phase A Isolation by turning CNMT ISOL PHASE A Switch to ACTUATE.

_____

4. Verify the following valves have shut:

   a. 1CS-11, LETDOWN ISOLATION _____

   b. 1FP-347, CONTAINMENT SPRINKLER ISOL WTR SUP ISO _____

   c. 1ED-164, RCDT VENT ISOL _____

   d. 1ED-121, RCDT PUMP DISCH _____

   e. 1RC-141, N_2 TO PRT _____

   f. 1CS-7, 45 GPM LETDOWN ORIFICE A _____

   g. 1CS-8, 60 GPM LETDOWN ORIFICE B _____

   h. 1CS-9, 60 GPM LETDOWN ORIFICE C _____

   i. 1CP-9, CONTAINMENT PURGE INLET _____

   j. 1CP-6, CONTAINMENT PURGE INLET _____

   k. 1CP-5, CONTAINMENT PURGE OUTLET _____

   l. 1CP-3, CONTAINMENT PURGE OUTLET _____

7.12 Phase A Actuations (continued)

5. Reset the following signals:

   a. Phase A Isolation Signal _____

   b. Containment Ventilation Isolation Signal _____

6. Open the following valves:

   a. 1CS-11, LETDOWN ISOLATION _____

   b. 1FP-347, CONTAINMENT SPRINKLER ISOL WTR SUP ISO _____

   c. 1CP-9, CONTAINMENT PURGE INLET _____

   d. 1CP-6, CONTAINMENT PURGE INLET _____

   e. 1CP-5, CONTAINMENT PURGE OUTLET _____

   f. 1CP-3, CONTAINMENT PURGE OUTLET _____

7. At MCB Section C, initiate a CNMT PHASE A ISOLATION by turning the CNMT ISOL PHASE A Switch to ACTUATE. _____ AC 5/1

8. Reset the following signals:

   a. Phase A Isolation Signal _____

   b. Containment Ventilation Isolation Signal _____

9. Verify the following valves have shut:

   a. 1FP-347, CONTAINMENT SPRINKLER ISOL WTR SUP ISO _____

   b. 1CS-11, LETDOWN ISOLATION _____

   c. 1CP-9, CONTAINMENT PURGE INLET _____

   d. 1CP-6, CONTAINMENT PURGE INLET _____

   e. 1CP-5, CONTAINMENT PURGE OUTLET _____

   f. 1CP-3, CONTAINMENT PURGE OUTLET _____

7.12 Phase A Actuations (continued)

10. Verify the following valves are open:

a.	1FP-347, CONTAINMENT SPRINKLER ISOL WTR SUP ISO	_____
b.	LCV-460, LETDOWN ISOLATION, (1CS-1)	_____
c.	LCV-459, LETDOWN ISOLATION, (1CS-2)	_____
d.	1CS-11, LETDOWN ISOLATION	_____
e.	1CS-7, 45 GPM LETDOWN ORIFICE A	_____
f.	1CS-8, 60 GPM LETDOWN ORIFICE B	_____
g.	1CS-9, 60 GPM LETDOWN ORIFICE C	_____
h.	1ED-164, RCDT VENT ISOL	_____
i.	1ED-121, RCDT PUMP DISCH	_____

7.13 SA and SB Equipment Verifications

NOTE: • All steps in this section can be performed in parallel, except as noted.

• If the SGs were in wet lay-up before this test, Step 1 should be performed, otherwise NA the step.

1. Align each SG for Wet Lay-up as desired per the following:

   a. A SG per OP-183.01 _____

   b. B SG per OP-183.02 _____

   c. C SG per OP-183.03 _____

2. Restore the Computer Room HVAC to normal per OP-163. _____

NOTE: Steps 3, 4 and 5 must be performed in order.

3. Verify the following equipment actuated to the indicated position:

a.	1CZ-2 SB, NORMAL INTAKE	SHUT	_____
b.	CZ-B26 SB, AH-15B DISCH (SLB-6)	OPEN	_____
c.	1CZ-4 SB, NORMAL EXHAUST	SHUT	_____
d.	CZ-B24 SB, R-2 B INLET (SLB-6)	OPEN	_____
e.	CZ-B22 SB, R-2 B OUTLET (SLB-6)	OPEN	_____
f.	1CZ-18 SB, PURGE MAKE UP	SHUT	_____
g.	1CZ-12 SB, EMER FILT OAI	SHUT	_____
h.	1CZ-10 SB, EMER FILT OAI	SHUT	_____
i.	1CZ-20 SB, EMER FILT DISCH	OPEN	_____
j.	CZ-D11 SB, EMERGENCY FILTRATION RECIRC	OPEN	_____
k.	1CZ-14 SB, PURGE EXHAUST	SHUT	_____
l.	ES-1B, PURGE EXHAUST FAN	OFF	_____
m.	R-2 B-SB, EMERGENCY FILTRATION FAN	ON	_____
n.	E-9B, NORMAL EXHAUST FAN	OFF	_____

7.13 SA and SB Equipment Verifications (continued)

4. Locally restore the Thermal Overload Test Switch to the NORMAL position for the following valves:

a. 3CZ-B4 SB, MCC 1B21-SB Cubicle 5A _____

b. 3CZ-B10 SB, MCC 1B21-SB Cubicle 1E _____

c. 3CZ-B12 SB, MCC 1B21-SB Cubicle 3C _____

d. 3CZ-B14 SB, MCC 1B36-SB Cubicle 1D _____

e. 3CZ-B2 SB, MCC 1B36-SB Cubicle 4A _____

f. 3CZ-B18 SB, MCC 1B36-SB Cubicle 4C _____

g. 3CZ-B20 SB, MCC 1B36-SB Cubicle 1B _____

h. 3CZ-B22 SB, MCC 1B36-SB Cubicle 2C _____

i. 3CZ-B24 SB, MCC 1B36-SB Cubicle 2B _____

j. 3CZ-B26 SB, MCC 1B36-SB Cubicle 5C _____

5. Realign the Control Room HVAC for normal operation per OP-173. _____

NOTE: Step 6 through 10 should be completed before Step 11.

6. Verify the following B Train equipment has realigned as indicated:

a. CZ-B8 SB, EXHAUST FAN DISCHARGE ISOL SHUT _____

b. CZ-B6 SB, RAB ELEC EQUIP ROOM OAI PURGE ISOL SHUT _____

c. E-10 B-SB, NORMAL EXHAUST FAN OFF _____

d. AC-D5, SWGR RM B OAI ISOLATION SHUT _____

e. AC-D6, BATTERY ROOM B RETURN DAMPER OPEN _____

f. E-29 1A-SB, BATTERY ROOM B EXHAUST FAN OFF _____

g. E-29 1B-SB, BATTERY ROOM B EXHAUST FAN OFF _____

7.13 SA and SB Equipment Verifications (continued)

7. At AEP-1 on SLB-8, Safeguards Terminal, or ERFIS Computer, verify shut the following RAB Normal Exhaust Isol Dampers: AC 5/1

a. AV-D4 SB-1 or ZAV3152C _____

b. AV-D30 SB-1 or ZAV3158C _____

c. AV-D6 SB-1 or ZAV3152A _____

d. AV-D8 SB-1 or ZAV3153C _____

e. AV-D10 SB-1 or ZAV3153A _____

f. AV-D12 SB-1 or ZAV3154C _____

g. AV-D14 SB-1 or ZAV3154A _____

h. AV-D16 SB-1 or ZAV3155C _____

i. AV-D18 SB-1 or ZAV3155A _____

j. AV-D20 SB-1 or ZAV3156C _____

k. AV-D22 SB-1 or ZAV3156A _____

l. AV-D24 SB-1 or ZAV3157A _____

m. AV-D28 SB-1 or ZAV3158A _____

n. AV-D26 SB-1 or ZAV3157C _____

o. AV-D32 SB-1 or ZAV3159C _____

p. AV-D38 SB-1 or ZAV3160C _____

q. AV-D34 SB-1 or ZAV3159C _____

r. AV-D36 SB-1 or ZAV3160A _____

s. AV-D53 SB-1 or ZAV3161A _____

t. AV-D59 SB-1 or ZAV3161C _____

u. AV-D63 SB-1 or ZAV3162A _____

v. AV-D67 SB-1 or ZAV3162C _____

w. AV-D71 SB-1 or ZAV3163A _____

x. AV-D75 SB-1 or ZAV3163C _____

y. AV-D87 SB-1 or ZAV3165A _____

z. AV-D83 SB-1 or ZAV3164C _____

aa. AV-D79 SB-1 or ZAV3164A _____

7.13 SA and SB Equipment Verifications (continued)

8. At AEP-1 on SLB-10, Safeguards Terminal, or ERFIS Computer, verify shut the following RAB Normal Exhaust Isol Dampers: AC S|1

a. AV-D3SA-1 or ZAV3131C _____

b. AV-D5SA-1 or ZAV3131A _____

c. AV-D7SA-1 or ZAV3132C _____

d. AV-D9SA-1 or ZAV3132A _____

e. AV-D11SA-1 or ZAV3133C _____

f. AV-D13SA-1 or ZAV3133A _____

g. AV-D15SA-1 or ZAV3134C _____

h. AV-D17SA-1 or ZAV3134A _____

i. AV-D19SA-1 or ZAV3135C _____

j. AV-D21SA-1 or ZAV3135A _____

k. AV-D23SA-1 or ZAV3136A _____

l. AV-D25SA-1 or ZAV3136C _____

m. AV-D27SA-1 or ZAV3137A _____

n. AV-D29SA-1 or ZAV3137C _____

o. AV-D31SA-1 or ZAV3138A _____

p. AV-D33SA-1 or ZAV3138C _____

q. AV-D35SA-1 or ZAV3139A _____

r. AV-D37SA-1 or ZAV3139C _____

s. AV-D52SA-1 or ZAV3140A _____

t. AV-D58SA-1 or ZAV3140C _____

u. AV-D62SA-1 or ZAV3141A _____

v. AV-D66SA-1 or ZAV3141C _____

w. AV-D70SA-1 or ZAV3142A _____

x. AV-D74SA-1 or ZAV3142C _____

y. AV-D78SA-1 or ZAV3143A _____

z. AV-D82SA-1 or ZAV3143C _____

aa. AV-D86SA-1 or ZAV3144A _____

7.13 SA and SB Equipment Verifications (continued)

9. At AEP-1, verify open the following E-6 Emergency Exhaust Fan Discharge Dampers:

a. On SLB-8:

(1) EXH AV D64 _____

(2) EXH AV D68 _____

(3) EXH AV D60 _____

(4) EXH AV D88 _____

(5) EXH AV D90 _____

(6) EXH AV D92 _____

(7) EXH AV D96 _____

b. On SLB-10:

(1) EXH AV D65 _____

(2) EXH AV D69 _____

(3) EXH AV D61 _____

(4) EXH AV D89 _____

(5) EXH AV D91 _____

(6) EXH AV D93 _____

(7) EXH AV D97 _____

10. Verify the following equipment actuated properly:

a.	E-6 A-SA, EMERGENCY EXHAUST FAN	ON	_____
b.	E-6 B-SB, EMERGENCY EXHAUST FAN	ON	_____
c.	E-17, RAB NORMAL EXHAUST FAN	OFF	_____
d.	E-18, RAB NORMAL EXHAUST FAN	OFF	_____
e.	E-19, RAB NORMAL EXHAUST FAN	OFF	_____
f.	E-20, RAB NORMAL EXHAUST FAN	OFF	_____
g.	S-3 A, RAB NORMAL SUPPLY FAN	OFF	_____
h.	S-3 B, RAB NORMAL SUPPLY FAN	OFF	_____

7.13 SA and SB Equipment Verifications (continued)

NOTE: Step 11 should be completed after Steps 6 through 10 are complete.

11. Realign the RAB HVAC for normal operation per OP-172. _____

12. At the A-SA ESW Pump Strainer, locally verify the following:

    a. ESW A-SA Strainer starts between 30 minutes and 2.5 hours after the start of ESW Pump A-SA. _____

    b. ESW A-SA Strainer operates and then stops. _____

13. At the B-SB ESW Pump Strainer, locally verify the following:

    a. ESW B-SB Strainer starts between 30 minutes and 2.5 hours after the start of B-SB ESW Pump. _____

    b. ESW B-SB Strainer operates and then stops. _____

14. Verify the following equipment actuated properly:

a.	EMER SW PUMP A-SA	ON	_____
b.	EMER SW PUMP B-SB	ON	_____
c.	EMER SW BOOSTER PUMP A-SA	ON	_____
d.	EMER SW BOOSTER PUMP B-SB	ON	_____
e.	AUX RSVR A-SA ESW TRAV SCRN	ROTATING	_____
f.	AUX RSVR B-SB ESW TRAV SCRN	ROTATING	_____
g.	1SW-39 SA, NORMAL SW SUPPLY TO HEADER A	SHUT	_____
h.	1SW-40 SB, NORMAL SW SUPPLY TO HEADER B	SHUT	_____
i.	1SW-276 SA, HEADER A&B RETURN TO NORMAL SW HEADER	SHUT	_____
j.	1SW-275 SB, HEADER A RETURN TO NORMAL HEADER	SHUT	_____

7.13 SA and SB Equipment Verifications (continued)

k.	1SW-274 SB,	HEADER B RETURN TO NORMAL HEADER	SHUT _____
l.	1SW-179 SA,	HEADER A TO CVCS CHILLERS	SHUT _____
m.	1SW-180 SB,	HEADER B TO CVCS CHILLERS	SHUT _____
n.	1SW-206 SA,	SW FROM CVCS CHILLERS TO HEADER A	SHUT _____
o.	1SW-204 SB,	SW FROM CVCS CHILLERS TO HEADER B	SHUT _____
p.	1SW-231 SA,	B NNS CNMT FAN COOLERS INLET ISOL	SHUT _____
q.	1SW-240 SA,	NNS CNMT FAN COOLERS OUTLET ISOL	SHUT _____
r.	1SW-242 SB,	NNS CNMT FAN COOLERS OUTLET ISOL	SHUT _____
s.	1SW-270,	ESW HEADER A TO AUX RESERVOIR	OPEN _____
t.	1SW-271,	ESW HEADER B TO AUX RESERVOIR	OPEN _____

NOTE: Step 15 must be completed after Steps 12 through 14.

15. Realign Service Water for normal operation per OP-139. _____

16. Verify the following equipment has actuated to the position listed:

a.	AH-1A-SB, FAN COOLER	LO SPD _____
b.	AH-1B-SB, FAN COOLER	LO SPD _____
c.	AH-2A-SA, FAN COOLER	LO SPD _____
d.	AH-2B-SA, FAN COOLER	LO SPD _____
e.	AH-3A-SA, FAN COOLER	LO SPD _____
f.	AH-3B-SA, FAN COOLER	LO SPD _____
g.	AH-4A-SB, FAN COOLER	LO SPD _____
h.	AH-4B-SB, FAN COOLER	LO SPD _____

7.13 SA and SB Equipment Verifications (continued)

i. AH-37A, FAN COOLER STOP _____

j. AH-37B, FAN COOLER STOP _____

k. AH-38A, FAN COOLER STOP _____

l. AH-38B, FAN COOLER STOP _____

m. AH-39A, FAN COOLER STOP _____

n. AH-39B, FAN COOLER STOP _____

NOTE: Step 17 must be completed after step 16.

17. Realign Containment HVAC per OP-169 as desired.

_____

18. To verify proper circuit continuity for Slave Relay K620 SB, from the Sequence of Events Recorder verify computer point ZTA1432E in the SOE cluster SWYD indicates TRIP.

_____

19. Locally or remotely verify the following breaker positions as indicated:

a. Breaker B for Charging/SI Pump C-SA CLOSED _____

b. Breaker B for CCW Pump C-SA CLOSED _____

20. At the MCB, open the following breakers:

a. BREAKER B FOR CHARGING/SI PUMP C-SAB _____

b. BREAKER B FOR CCW PUMP C-SAB _____

21. At Emer Bus 1B-SB, rack out the following breakers and open the Control Power Switches:

a. Cubicle 7, Breaker B for Charging/SI Pump C-SAB _____

b. Cubicle 3, Breaker B for CCW Pump C-SAB _____

22. On the Bypass Permissive Light Box, verify lit the SI ACTUATED RHR SUCTION WILL XFER ON RWST LO LO LEVEL light.

_____

7.13 SA and SB Equipment Verifications (continued)

23. Perform the following to reset SI Suction Auto Switchover:

    a. Turn SI SUCTION AUTO SWITCHOVER RESET TRAIN A to RESET.

    _____

    b. Turn SI SUCTION AUTO SWITCHOVER RESET TRAIN B to RESET.

    _____

    c. On the Bypass Permissive Status Light Box, verify off SI ACTUATED RHR SUCT WILL XFER ON LO-LO LEVEL.

    _____

24. Verify the following valves shut:

    a. 1FW-249, MAIN FW B REGULATOR _____

    b. 1FW-256, MN FW B REG BYP _____

    c. 1FW-307, MAIN FW A ISOLATION BYPASS ISOLATION _____

    d. 1FW-159, MAIN FW A ISOLATION _____

AC 5/11

7.13 SA and SB Equipment Verifications (continued)

23. Perform the following to reset SI Suction Auto Switchover:

a. Turn SI SUCTION AUTO SWITCHOVER RESET TRAIN A to RESET.

_____

b. Turn SI SUCTION AUTO SWITCHOVER RESET TRAIN B to RESET.

_____

c. On the Bypass Permissive Status Light Box, verify off SI ACTUATED RHR SUCT WILL XFER ON LO-LO LEVEL.

_____

7.14 Post-test Restorations and Verifications

NOTE: All steps in this section can be performed in parallel.

1. Complete Attachments 3 - 9, and 11 as follows:

   a. From the Actuated Times in Section 7.4 Step 13 and the start time in Section 7.4 Step 12, determine the response time for the components on Attachments 3 - 9.

   _____

   b. From the reports obtained in Section 7.11 Step 10, verify the equipment in Attachment 11 actuated properly (from the ERFIS group displays, safeguards terminal reports, or HDAL reports, if possible).

   _____

2. Have computer maintenance personnel restore computer points listed in Attachments 10 and 12 to the recorded As Found values and initial the Restored to As Found column.

   _____

3. Remove the following jumpers that were installed to allow both trains of CNMT Fan Coolers to start.

   a. ARP-4A-SA Row F1, between Terminals 105 and 106 _____

   _____ Verified

   b. ARP-4A-SA Row F3, between Terminals 116 and 117 _____

   _____ Verified

   c. ARP-4B-SB Row F1, between Terminals 116 and 117 _____

   _____ Verified

   d. ARP-4B-SB Row F3, between Terminals 116 and 117 _____

   _____ Verified

7.14 Post-test Restorations and Verifications (continued)

4. Verify closed the breakers to the following valves:

   a. MCC 1B21-SB Cubicle 7A
      1SI-311 SB, CNMT Sump to RHR Pump B-SB _____

      _____
      Verified

   b. MCC 1B21-SB Cubicle 11B
      1SI-301 SB, CNMT Sump to RHR Pump B-SB _____

      _____
      Verified

   c. MCC 1A21-SA Cubicle 9B
      1SI-310 SA, CNMT Sump to RHR Pump A-SA _____

      _____
      Verified

   d. MCC 1A21-SA Cubicle 7C
      1SI-300 SA, CNMT Sump to RHR Pump A-SA _____

      _____
      Verified

5. At Emer Bus 1B-SB, have electricians perform the following:

   a. Reconnect the TOC Switch in Cubicle 7, B-SB Breaker for the Charging/SI Pump C-SAB.

      _____

      _____
      Verified

   b. Reconnect the TOC Switch in Cubicle 3, B-SB Breaker for the CCW Pump C-SAB.

      _____

      _____
      Verified

6. To re-enable the Primary SI Start Signal to EDG B-SB, land the W wire of Cable 12008F-SB to the field side of TB604 Terminal 4 in SSP(B) Output Cabinet 1. (6-B-401 2008)

   _____

   _____
   Verified

7.14 Post-test Restorations and Verifications (continued)

7. Enable the computer point for 1CS-218, CSIP Discharge Header Cross Connect as follows: (6-B-401 293):

a. Remove jumper between the U Wire (Cable 10293H-SA) and MTC-1A SA Panel 3 Terminal 22.

_____

_____
Verified

b. Remove jumper between the G Wire (Cable 10293H-SA) and MTC-1A SA Panel 3 Terminal 23.

_____

_____
Verified

c. Remove jumper between the O Wire (Cable 10293H-SA) and MTC-1A SA Panel 3 Terminal 20.

_____

_____
Verified

d. Reconnect the U Wire (Cable 10293H-SA) to MTC-1A SA Panel 2 Terminal 91.

_____

_____
Verified

e. Reconnect the G Wire (Cable 10293H-SA) to MTC-1A SA Panel 2 Terminal 92.

_____

_____
Verified

f. Reconnect the O Wire (Cable 10293H-SA) to MTC-1A SA Panel 2 Terminal 89.

_____

_____
Verified

7.14 Post-test Restorations and Verifications (continued)

8. To re-enable the low pressure signal to the SG blowdown valves, remove the following jumpers or document that the jumpers have been installed per another procedure, if they are to remain for SG wet lay-up:

a. In ARP-19A(SA) Row F3, between Terminals 44 and 58 (6-B-401 1207)

_____

_____ Verified

b. In ARP-19A(SA) Row F3, between Terminals 93 and 107 (6-B-401 1209)

_____

_____ Verified

c. In ARP-19A(SA) Row F3, between Terminals 21 and 35 (6-B-401 1211)

_____

_____ Verified

d. In ARP-19B(SB) Row F3, between Terminals 44 and 58 (6-B-401 1191)

_____

_____ Verified

e. In ARP-19B(SB) Row F3, between Terminals 26 and 40 (6-B-401 1194)

_____

_____ Verified

f. In ARP-19B(SB) Row F3, between Terminals 7 and 21 (6-B-401 1192)

_____

_____ Verified

g. In ARP-19B(SB) Row F3, between Terminals 104 and 118 (6-B-401 1195)

_____

_____ Verified

7.14 Post-test Restorations and Verifications (continued)

h. In ARP-19B(SB) Row F3, between Terminals 63 and 77 (6-B-401 1193)

_____

_____
Verified

i. In ARP-19B(SB) Row F3, between Terminals 83 and 97 (6-B-401 1196)

_____

_____
Verified

9. To enable the low PRZ Level Signal, reconnect the following wires in Auxiliary Relay Rack AR-1: (6-B-401 171)

a. From the RW Wire (Cable 10171A) to Terminal 11 of TB-108

_____

_____
Verified

b. From the UR Wire (Cable 10171C) to Terminal 7 of TB-112

_____

_____
Verified

10. To re-enable the Phase A Isolation Signal to 1IA-819, remove the jumper from Terminal TB618-7 to TB618-8 in the back of SSP(A) Output Cabinet 1: (6-B-401 2458)

_____

_____
Verified

11. To re-enable the CNMT Lo ΔP Trip Signal to the CNMT Normal and Pre-Entry Purge Supply Fans, in ARP-17 Row R1, remove the jumper from Terminal 44 to 45: (6-B-401 2706)

_____

_____
Verified

7.14 Post-test Restorations and Verifications (continued)

12. Remove the following jumpers to remove the RAB Exhaust Fan start signal to the RAB Normal Exhaust Dampers: (6-B-401 3177)

a. In ARP-2A(SA) Row R4, from Terminals 4 to 3

_____

_____
Verified

b. In ARP-2B(SB) Row R4, from Terminals 92 to 91

_____

_____
Verified

13. R Using the computer HDAL printouts, ensure the following Service Water valve positions occurred within 11 seconds of the Safety Injections to verify the SI Signals stroked these valves. (Reference 2.4 Item 3)

a.	1SW-270, HEADER A TO AUX RESERVOIR	NOT SHUT	_____
b.	1SW-271, HEADER B TO AUX RESERVOIR	NOT SHUT	_____
c.	1SW-274, HEADER A RETURN	NOT OPEN	_____
d.	1SW-275, HEADER B RETURN	NOT OPEN	_____
e.	1SW-39, NORMAL SW SUPPLY TO HEADER A	NOT OPEN	_____
f.	1SW-40, NORMAL SW SUPPLY TO HEADER B	NOT OPEN	_____

7.14 Post-test Restorations and Verifications (continued)

NOTE: Steps 14 through 16 will reinstate actual Steam Generator level to the MCB, process instrumentation and SSPS. This includes the Reactor Trip and AFW Actuation Signals.

14. If Steam Generator A had Test Potentiometers installed per Section 7.1 Step 32, then perform the following on affected channels and NA the transmitter loop(s) not performed:

a. LT-474 Channel I (1364-046574 S09, 6-B-401 993)

(1) In PIC Cab-1, disconnect the Test Potentiometer connected between Terminals TBF-10 and TBF-11. _____

_____
Verified

(2) In PIC Cab-1, reconnect the LT-474 Transmitter Field Lead to TBF-10. _____

_____
Verified

b. LT-475 Channel II (1364-046575 S09 6-B-401 993)

(1) In PIC Cab-2, disconnect the Test Potentiometer connected between Terminals TBF-10 and TBF-11. _____

_____
Verified

(2) In PIC Cab-2, reconnect the LT-475 Transmitter Field Lead to TBF-10. _____

_____
Verified

c. LT-476 Channel III (1364-046576 S09, 6-B-401 994)

(1) In PIC Cab-3, disconnect the Test Potentiometer connected between Terminals TBF-10 and TBF-11. _____

_____
Verified

(2) In PIC Cab-3, reconnect the LT-476 Transmitter Field Lead to TBF-10. _____

_____
Verified

7.14 Post-test Restorations and Verifications (continued)

15. If Steam Generator B had Test Potentiometers installed per Section 7.1 Step 33, then perform the following on the affected channels and NA the transmitter loop(s) not performed:

a. LT-484 Channel I (1364-046574 S10, 6-B-401 993)

(1) In PIC Cab-1, disconnect the Test Potentiometer connected between Terminals TBF-13 and TBF-14. _____

_____ Verified

(2) In PIC Cab-1, reconnect the LT-484 Transmitter Field Lead to TBF-13. _____

_____ Verified

b. LT-485 Channel II (1364-046575 S10, 6-B-401 993)

(1) In PIC Cab-2, disconnect the Test Potentiometer connected between Terminals TBF-13 and TBF-14. _____

_____ Verified

(2) In PIC Cab-2, reconnect the LT-485 Transmitter Field Lead to TBF-13. _____

_____ Verified

c. LT-486 Channel III (1364-046576 S10, 6-B-401 994)

(1) In PIC Cab-3, disconnect the Test Potentiometer connected between Terminals TBF-13 and TBF-14. _____

_____ Verified

(2) In PIC Cab-3, reconnect the LT-486 Transmitter Field Lead to TBF-13. _____

_____ Verified

7.14 Post-test Restorations and Verifications (continued)

16. If Steam Generator C had Test Potentiometers installed per Section 7.1 Step 34, then perform the following on the affected channels and NA the transmitter loop(s) not performed:

a. LT-494 Channel I (1364-046574 S11, 6-B-401 993)

(1) In PIC Cab-1, disconnect the Test Potentiometer connected between Terminals TBF-16 and TBF-17. _____

_____
Verified

(2) In PIC Cab-1, reconnect the LT-494 Transmitter Field Lead to TBF-16. _____

_____
Verified

b. LT-495 Channel II (1364-046575 S11, 6-B-401 993)

(1) In PIC Cab-2, disconnect the Test Potentiometer connected between Terminals TBF-16 and TBF-17. _____

_____
Verified

(2) In PIC Cab-2, reconnect the LT-495 Transmitter Field Lead to TBF-16. _____

_____
Verified

c. LT-496 Channel III (1364-046576 S11, 6-B-401 994)

(1) In PIC Cab-3, disconnect the Test Potentiometer connected between Terminals TBF-16 and TBF-17. _____

_____
Verified

(2) In PIC Cab-3, reconnect the LT-496 Transmitter Field Lead to TBF-16. _____

_____
Verified

7.14 Post-test Restorations and Verifications (continued)

NOTE: The following step will require a clearance per AP-020. The clearance restoration lineup should be according to the normal OP-107 lineup with the exception that the breaker for Charging/SI Pump A-SA should remain racked out.

17. Have Maintenance personnel perform the following:

a. Remove the orificed spool piece installed in place of 1CS-744, Charging Pumps to Refuel Water Storage Tank Relief Valve.

_____

b. Reinstall 1CS-744.

_____

_____
Verified

18. Perform CM-M0190 to properly vent 1CS-744.

_____

19. Locally lock open 1CS-183, A CSIP Disch Isol.

_____

_____
Verified

20. Open 1CS-182, CHARGING/SI PUMP A-SA MINIFLOW ISOL.

_____

_____
Verified

21. To re-enable the A Train SI Signal to the Main FW Pumps, in ARP-5 Row R1, land the W Wire (Cable 11337N) to Terminal 33. (6-B-401 1337)

_____

_____
Verified

7.14 Post-test Restorations and Verifications (continued)

21a. To restore the A Train Feedwater Isolation signal (FWIS) to the valves listed below, perform the following

a. Remove the jumper in SSP(A) Output Cabinet 1 between terminals 631-5 and 631-6 to restore the FWIS to 1FW-249, MAIN FW B REGULATOR. (6-B-401 802)

_____

_____
Verified

b. Remove the jumper in SSP(A) Output Cabinet 1 between terminals 655-3 and 655-4 to restore the FWIS to 1FW-256, MN FW B REG BYP. (6-B-401 805)

_____

_____
Verified

AC 5/1

c. Re-connect the W Wire (Cable 11827C-SA) to the field side of Terminal TB 614-6 in SSP(A) Output Cabinet 1 to restore the MFIS to 1FW-307, MAIN FW A ISOLATION BYPASS ISOLATION. (6-B-401 1827)

_____

_____
Verified

d. Re-connect the W Wire (Cable 11830M-SA) to the field side of Terminal TB 627-10 in SSP(A) Output Cabinet 1 to restore the MFIS to 1FW-159, MAIN FW A ISOLATION. (6-B-401 1830)

_____

_____
Verified

AC 5/1

7.14 Post-test Restorations and Verifications (continued)

22. Restore flow to Radiation Monitor RC-1LT-3502A-SA, Containment Leak Detection System per OP-118.

_____

23. R Restore the Charging/SI Pump C-SAB and CCW Pump C-SAB to standby conditions:

a. Identify where Charging/SI Pump C-SAB is wired

Bus Location _____ _____

b. Have the breaker for the Charging/Safety Injection Pump C-SAB racked to test on the bus identified above.

_____

_____
Verified

c. Identify where CCW Pump C-SAB is wired.

Bus Location _____ _____

d. Have the breaker for the CCW Pump C-SAB racked to test on the bus identified above.

_____

_____
Verified

24. Realign equipment per the post-test alignment column of Attachment 2 as required for plant conditions.

_____

25. Attach the SOE, Safeguards Terminal, and HDAL printouts to this procedure for future reference.

_____

26. Complete applicable portions of Attachment 14, Certifications and Reviews, and inform the Shift Supervisor - Nuclear that this OST is completed.

_____

8.0 DIAGRAMS/ATTACHMENTS

Attachment 1 - Calibration Data Sheet

Attachment 2 - Test Alignment

Attachment 3 - Feedwater Isolation Response Time

Attachment 4 - Phase A Isolation Response Time

Attachment 5 - AFW Pump Response Time

Attachment 6 - Emergency Service Water Response Time

Attachment 7 - ECCS Response Time

Attachment 8 - CNMT Ventilation Isolation Response Time

Attachment 9 - CNMT Fan Coolers Response Time

Attachment 10 - ERFIS Digital Alarm/Polling Rate

Attachment 11 - Equipment Verification

Attachment 12 - ERFIS Analog Alarm/Polling Rate

Attachment 13 - Jumpers and Lifted Leads

Attachment 14 - Certifications and Reviews

Calibration Data Sheet

INST/MODEL DESCRIPTION	INST ID NO.	CAL DUE DATE
Multimeter, Fluke 8600A or equivalent		
Stopwatch		
Stopwatch		
Stopwatch		
Stopwatch		
Stopwatch		

Test Alignment

Component Name and Number	As Found	Pretest	Initial	Post-test	Initial	Verified
CHARGING/SI PUMP A-SA		NA		ON/OFF		
CHARGING/SI PUMP B-SB		ON		ON/OFF		
CHARGING/SI PUMP BREAKER A C-SA		OPEN		OPEN		
CHARGING/SI PUMP BREAKER B C-SB		OPEN		OPEN		
RHR PUMP A-SA		NA		ON/OFF		
RHR PUMP B-SB		ON		ON/OFF		
CCW PUMP A-SA		ON		ON/OFF		
CCW PUMP B-SB		ON		ON/OFF		
CCW PUMP BREAKER A C-SA		OPEN		OPEN		
CCW PUMP BREAKER B C-SB		OPEN		OPEN		
EMER SW PUMP A-SA		OFF		OFF		
EMER SW PUMP B-SB		ON		OFF		
EMER SW BOOSTER PUMP A-SA		OFF		OFF		
EMER SW BOOSTER PUMP B-SB		OFF		OFF		
AUX FW MOTOR PUMP A-SA		OFF		OFF		
AUX FW MOTOR PUMP B-SB		OFF		OFF		
1AF-55 AUX FW A ISOLATION		NA		OPEN/SHUT		
1AF-93 AUX FW B ISOLATION		NA		OPEN/SHUT		
1AF-74 AUX FW C ISOLATION		NA		OPEN/SHUT		
ESW SCREEN WASH PUMP A-SA		OFF		OFF		
ESW SCREEN WASH PUMP B-SA		OFF		OFF		
AUX RSVR TRAV SCREEN A-SA		OFF		OFF		
AUX RSVR TRAV SCREEN B-SB		OFF		OFF		
1CT-47 CNMT SPRAY PUMP A-SA RECIRC		OPEN		SHUT		
1CT-95 CNMT SPRAY PUMP B-SB RECIRC		OPEN		SHUT		
1CT-24 CONTAINMENT SPRAY EDUCTOR TEST		OPEN		SHUT		

AC 5/1

Test Alignment

Component Name and Number	As Found	Pretest	Initial	Post-test	Initial	Verified
1CT-25 CONTAINMENT SPRAY EDUCTOR TEST		OPEN		SHUT		
AH-37 A FAN COOLER		NA		ON/OFF		
AH-37 B FAN COOLER		NA		ON/OFF		
AH-38 A FAN COOLER		NA		ON/OFF		
AH-38 B FAN COOLER		NA		ON/OFF		
AH-39 A FAN COOLER		NA		ON/OFF		
AH-39 B FAN COOLER		NA		ON/OFF		
CONTAINMENT SPRAY PUMP A-SA		NA		OFF		
CONTAINMENT SPRAY PUMP B-SB		NA		OFF		
1CS-214 CHARGING/SI PUMPS MINIFLOW ISOL		OPEN		OPEN		
1CS-182 CHARGING/SI PUMP C-SA MINIFLOW ISOL		OPEN		OPEN/SHUT		
1CS-198 CHARGING/SI PUMP B-SA MINIFLOW ISOL		OPEN		OPEN/SHUT		
1CS-210 CHARGING/SI PUMP A-SA MINIFLOW ISOL		OPEN		OPEN/SHUT		
1CS-746 CHARGING/SI PUMP A-SA ALTERNATE MINIFLOW		SHUT		SHUT		
1CS-752 CHARGING/SI PUMP B-SB ALTERNATE MINIFLOW		SHUT		SHUT		
1SI-1 CHARGING/SI PUMPS TO BORON INJECTION TANK		SHUT		SHUT		
1SI-2 CHARGING/SI PUMPS TO BORON INJECTION TANK		SHUT		SHUT		
1SI-3 BORON INJECTION TANK OUTLET		SHUT		SHUT		
1SI-4 BORON INJECTION TANK OUTLET		SHUT		SHUT		
1CS-238 CHARGING LINE ISOLATION		NA		OPEN		
1CS-235 CHARGING LINE ISOLATION		NA		OPEN		
LCV-115B SUCTION FROM RWST		SHUT		SHUT		
LCV-115D SUCTION FROM RWST		SHUT		SHUT		
LCV-115C VCT OUTLET		OPEN		OPEN		
LCV-115E VCT OUTLET		OPEN		OPEN		

Test Alignment

Component Name and Number	As Found	Pretest	Initial	Post-test	Initial	Verified
1CC-304 CCW TO GROSS FAILED FUEL DETECTOR		OPEN		OPEN/SHUT		
LCV-676 CCW TO SAMPLE HEAT EXCHANGERS		OPEN		OPEN/SHUT		
1CC-114 CCW TO SAMPLE HEAT EXCHANGERS		OPEN		OPEN/SHUT		
1CC-115 CCW TO SAMPLE HEAT EXCHANGERS		OPEN		OPEN/SHUT		
1CS-7 45 GPM LETDOWN ORIFICE A		NA		OPEN		
1CS-8 60 GPM LETDOWN ORIFICE		NA		OPEN		
1CS-9 60 GPM LETDOWN ORIFICE		NA		OPEN		
1CS-11 LETDOWN ISOLATION		NA		OPEN		
1SI-179 ACCUMULATOR FILL FROM RWST		OPEN		SHUT		
1SI-287 ACCUMULATORS AND PR$_2$ PORV N$_2$ SUPPLY		OPEN		OPEN		
1SI-283 ACCUMULATOR CHECK VALVE TEST RETURN		OPEN		SHUT		
1SI-284 ACCUMULATOR CHECK VALVE TEST RETURN		OPEN		SHUT		
1RC-161 RMW TO CNMT		OPEN		OPEN		
1RC-141 N$_2$ TO PRT		SHUT		OPEN		
1RC-144 N$_2$ TO PRT		OPEN		OPEN		
1CS-470 RCP SEAL WATER RETURN		OPEN		OPEN/SHUT		
1CS-472 RCP SEAL WATER RETURN		OPEN		OPEN/SHUT		
1CC-202 CCW FM EXCESS LTDN AND RCDT HEAT EXCHANGERS		OPEN		OPEN		
1CC-176 CCW FM EXCESS LTDN AND RCDT HEAT EXCHANGERS		OPEN		OPEN		
1IA-819 CONTAINMENT INSTRUMENT AIR		OPEN		OPEN		
1FW-159 MAIN FW A ISOLATION		NA		SHUT		
1FW-277 MAIN FW B ISOLATION		NA		SHUT		
1FW-217 MAIN FW C ISOLATION		NA		SHUT		
1FW-307 MAIN FW A ISOLATION BYPASS ISOLATION		NA		SHUT		
1FW-319 MAIN FW B ISOLATION BYPASS ISOLATION		NA		SHUT		

Test Alignment

Component Name and Number	As Found	Pretest	Initial	Post-test	Initial	Verified
1FW-313 MAIN FW C ISOLATION BYPASS ISOLATION		NA		SHUT		
1AF-64 FEEDWATER PREHEATER BYPASS		NA		SHUT		
1AF-102 FEEDWATER B PREHEAT BYPASS		NA		SHUT		
1AF-81 FEEDWATER C PREHEAT BYPASS		NA		SHUT		
1FW-133 MAIN FW A REGULATOR		NA		SHUT		
1FW-249 MAIN FW B REGULATOR		NA		SHUT		
1FW-191 MAIN FW C REGULATOR		NA		SHUT		
1FW-140 MN FW A REG BYP		NA		SHUT		
1FW-256 MN FW B REG BYP		NA		SHUT		
1FW-198 MN FW C REG BYP		NA		SHUT		
AH-1 A-SB FAN COOLER		OFF		HI/OFF		
AH-1 B-SB FAN COOLER		OFF		HI/OFF		
AH-2 A-SA FAN COOLER		HI		HI/OFF		
AH-2 B-SA FAN COOLER		HI		HI/OFF		
AH-3 A-SA FAN COOLER		HI		HI/OFF		
AH-3 B-SA FAN COOLER		HI		HI/OFF		
AH-4 A-SB FAN COOLER		OFF		HI/OFF		
AH-4 B-SB FAN COOLER		OFF		HI/OFF		
1SW-39 NORMAL SW SUPPLY TO A HEADER		OPEN		OPEN/SHUT		
1SW-40 NORMAL SW SUPPLY TO B HEADER		SHUT		OPEN/SHUT		
1SW-274 HEADER B RETURN TO NORMAL HEADER		SHUT		OPEN/SHUT		
1SW-275 HEADER A RETURN TO NORMAL HEADER		OPEN		OPEN/SHUT		
1SW-276 HEADERS A&B RETURN TO NORMAL SW HEADER		OPEN		OPEN		
1SW-179 HEADER A TO CVCS CHILLERS		OPEN		OPEN/SHUT		
1SW-180 HEADER B TO CVCS CHILLERS		OPEN		OPEN/SHUT		

AC 5/1

Test Alignment

Component Name and Number	As Found	Pretest	Initial	Post-test	Initial	Verified
1SW-206 SW FROM CVCS CHILLERS TO HEADER A		OPEN		OPEN/SHUT		
1SW-204 SW FROM CVCS CHILLERS TO HEADER B		OPEN		OPEN/SHUT		
1SW-270 HEADER A TO AUX RESERVOIR		SHUT		SHUT		
1SW-271 HEADER A TO AUX RESERVOIR		OPEN		SHUT		
1CB-2 VACUUM RELIEF		OPEN		SHUT		
1CB-6 VACUUM RELIEF		OPEN		SHUT		
1CP-9 NORMAL PURGE INLET		NA		OPEN/SHUT		
1CP-8 NORMAL PURGE INLET		NA		OPEN/SHUT		
1CP-10 PRE-ENTRY PURGE ISOLATION		NA		OPEN/SHUT		
1CP-7 PRE-ENTRY PURGE ISOLATION		NA		OPEN/SHUT		
1CP-5 NORMAL PURGE DISCHARGE		NA		OPEN/SHUT		
1CP-3 NORMAL PURGE DISCHARGE		NA		OPEN/SHUT		
1CP-4 PRE-ENTRY PURGE ISOLATION		NA		OPEN/SHUT		
1CP-1 PRE-ENTRY PURGE ISOLATION		NA		OPEN/SHUT		
AH-82 A NORMAL PURGE SUPPLY FAN		NA		ON/OFF		
AH-82 NORMAL PURGE SUPPLY FAN		NA		ON/OFF		
AH-81 A PRE-ENTRY PURGE SUPPLY FAN		NA		ON/OFF		
AH-81 B PRE-ENTRY PURGE SUPPLY FAN		NA		ON/OFF		
E-5 A CNMT PRE-ENTRY PURGE EXHAUST FAN		NA		ON/OFF		
E-5 B CNMT PRE-ENTRY PURGE EXHAUST FAN		NA		ON/OFF		
AH-15 SA NORMAL SUPPLY FAN		NA		ON/OFF		
AH-15 SB NORMAL SUPPLY FAN		NA		ON/OFF		
1CZ-1 SA NORMAL INTAKE		NA		OPEN		
1CZ-2 SB NORMAL INTAKE		NA		OPEN		
1CZ-3 SA NORMAL EXHAUST		NA		OPEN		
1CZ-4 SB NORMAL EXHAUST		NA		OPEN		

Test Alignment

Component Name and Number	As Found	Pretest	Initial	Post-test	Initial	Verified
E-9A NORMAL EXHAUST FAN		NA		ON/OFF		
E-9B NORMAL EXHAUST FAN		NA		ON/OFF		
ES-1A PURGE EXHAUST FAN		NA		OFF		
ES-1B PURGE EXHAUST FAN		NA		OFF		
1CZ-13 SA PURGE EXHAUST		NA		SHUT		
1CZ-14 SB PURGE EXHAUST		NA		SHUT		
1CZ-17 SA PURGE EXHAUST		NA		SHUT		
1CZ-18 SB PURGE MAKEUP		NA		SHUT		
1CZ-16 SA EMERGENCY FILTRATION RECIRC		NA		SHUT		
1CZ-11 SB EMERGENCY FILTRATION RECIRC		AN		SHUT		
R2-SA EMERGENCY FILTRATION FAN		NA		OFF		
R2-SB EMERGENCY FILTRATION FAN		NA		OFF		
E-88 S-SA DIESEL GEN ROOM EXHAUST FAN		OFF		ON/OFF		
E-88 C-SB DIESEL GEN ROOM EXHAUST FAN		OFF		ON/OFF		
1SP-217 STM GEN A SAMPLE CNMT ISOL		OPEN		OPEN/SHUT		
1SP-222 STM GEN A SAMPLE CNMT ISOL		OPEN		OPEN/SHUT		
1SP-227 STM GEN A SAMPLE CNMT ISOL		OPEN		OPEN/SHUT		
1SP-214 STM GEN A SHELL SAMPLE ISOL		OPEN		OPEN/SHUT		
1SP-219 STM GEN B SHELL SAMPLE ISOL		OPEN		OPEN/SHUT		
1SP-224 STM GEN C SHELL SAMPLE ISOL		OPEN		OPEN/SHUT		
1SP-216 STM GEN A TUBE SHEET SAMPLE ISOL		OPEN		OPEN/SHUT		
1SP-221 STM GEN B TUBE SHEET SAMPLE ISOL		OPEN		OPEN/SHUT		
1SP-226 STM GEN C TUBE SHEET SAMPLE ISOL		OPEN		OPEN/SHUT		
1BD-11 STM GEN A BLDN ISOL		NA		OPEN/SHUT		
1BD-30 STM GEN B BLDN ISOL		NA		OPEN/SHUT		
1BD-49 STM GEN C BLDN ISOL		NA		OPEN/SHUT		

Test Alignment

Component Name and Number	As Found	Pretest	Initial	Post-test	Initial	Verified
1BD-7 STM GEN A SHELL BLDN ISOL		NA		OPEN/SHUT		
1BD-26 STM GEN B SHELL BLDN ISOL		NA		OPEN/SHUT		
1BD-45 STM GEN C SHELL BLDN ISOL		NA		OPEN/SHUT		
1BD-1 STM GEN A TUBE BLDN ISOL		NA		OPEN/SHUT		
1BD-20 STM GEN B TUBE BLDN ISOL		NA		OPEN/SHUT		
1BD-39 STM GEN C TUBE BLDN ISOL		NA		OPEN/SHUT		
1SP-85 SI ACCUM SAMPLE CNMT		OPEN		SHUT		
1SP-78 SI ACCUM 1A SAMPLE ISOL		OPEN		SHUT		
1SP-81 SI ACCUM 1B SAMPLE ISOL		OPEN		SHUT		
1SP-84 SI ACCUM 1C SAMPLE ISOL		OPEN		SHUT		
1MS-25 STM GEN A STM ANALYZER ISOL		OPEN		SHUT		
1MS-27 STM GEN B STM ANALYZER ISOL		OPEN		SHUT		
1MS-29 STM GEN C STM ANALYZER ISOL		OPEN		SHUT		
1SP-948 RCS LOOP B&C HOT LET CNMT ISOL		OPEN		SHUT		
1SP-949 RCS LOOP B&C HOT LEG CNMT ISOL		OPEN		SHUT		
1SP-40 PRESSURIZER LIQUID SAMPLE ISOL		OPEN		SHUT		
1SP-41 PRESSURIZER LIQUID SAMPLE ISOL		OPEN		SHUT		
1SP-59 PRESSURIZER STM SPACE SAMPLE ISOL		OPEN		SHUT		
1SP-60 PRESSURIZER STM SPACE SAMPLE ISOL		OPEN		SHUT		
1ED-94 CNMT SUMP ISOL		OPEN		OPEN		
1ED-95 CNMT SUMP ISOL		OPEN		OPEN		
1FW-163 FW A AMMONIA ADD ISOL		OPEN		OPEN/SHUT		
1FW-279 FW B AMMONIA ADD ISOL		OPEN		OPEN/SHUT		
1FW-221 FW C AMMONIA ADD ISOL		OPEN		OPEN/SHUT		
1FW-165 FW A HYDRAZINE ADD ISOL		OPEN		OPEN/SHUT		
1FW-281 FW B HYDRAZINE ADD ISOL		OPEN		OPEN/SHUT		

Test Alignment

Component Name and Number	As Found	Pretest	Initial	Post-test	Initial	Verified
1FW-223 FW C HYDRAZINE ADD ISOL		OPEN		OPEN/SHUT		
1AF-163 AFW A AMMONIA ADD ISOL		OPEN		OPEN/SHUT		
1AF-167 AFW B AMMONIA ADD ISOL		OPEN		OPEN/SHUT		
1AF-161 AFW C AMMONIA ADD ISOL		OPEN		OPEN/SHUT		
1AF-165 AFW A HYDRAZINE ADD ISOL		OPEN		OPEN/SHUT		
1AF-159 AFW B HYDRAZINE ADD ISOL		OPEN		OPEN/SHUT		
1AF-163 AFW C HYDRAZINE ADD ISOL		OPEN		OPEN/SHUT		
1SP-916 RCS LEAK DET SAMPLE ISOL		OPEN		OPEN		
1SP-918 RCS LEAK DET SAMPLE ISOL		OPEN		OPEN		
1SP-16 RCS LEAK DET SAMPLE ISOL		OPEN		OPEN		
1SP-939 RCS LEAK DET SAMPLE ISOL		OPEN		OPEN		
1SP-915 H_2 SAMPLING TRAIN A CNMT ISOL		OPEN		OPEN		
1SP-917 H_2 SAMPLING TRAIN A CNMT ISOL		OPEN		OPEN		
1SP-200 SAMPLE RETURN CNMT ISOL VALVES		OPEN		OPEN/SHUT		
1SP-208 SAMPLE RETURN CNMT ISOL VALVES		OPEN		SHUT		
1SP-201 SAMPLE RETURN CNMT ISOL VALVES		OPEN		OPEN/SHUT		
1SP-209 SAMPLE RETURN CNMT ISOL VALVES		OPEN		SHUT		
1SP-12 H_2 SAMPLING TRAIN A ISOL		OPEN		OPEN		
1SP-941 H_2 SAMPLING TRAIN A ISOL		OPEN		OPEN		
1SP-42 H_2 SAMPLING TRAIN B ISOL		OPEN		OPEN		
1SP-62 H_2 SAMPLING TRAIN B ISOL		OPEN		OPEN		
1SP-919 H_2 SAMPLING TRAIN B ISOL		OPEN		OPEN		
1SP-943 H_2 SAMPLING TRAIN B ISOL		OPEN		OPEN		
1ED-125 RCDT PUMP DISCH		OPEN		OPEN		
1ED-161 RCDT VENT ISOL		OPEN		OPEN		
1ED-121 RCDT PUMP DISCH		OPEN		OPEN		

Test Alignment

Component Name and Number	As Found	Pretest	Initial	Post-test	Initial	Verified
1ED-164 RCDT VENT ISOL		OPEN		OPEN		
1SW-231 NNS CNMT FAN CLRS OUTLET ISOL		OPEN		OPEN		
1SW-240 NNS CNMT FAN CLRS OUTLET ISOL		OPEN		OPEN		
1SW-242 NNS CNMT FAN CLRS OUTLET ISOL		OPEN		OPEN		
1FP-347 CNMT SPRINKLER ISOL WTR SUP ISOL		OPEN		OPEN		
1CH-116 CHILLED WATER TO NESSR FAN CLRS ISOL		SHUT		OPEN/SHUT		
1CH-126 CHILLED WATER FROM NESSR FAN CLRS ISOL		OPEN		OPEN/SHUT		
1FP-1015 SA NORMAL MAKEUP		OPEN		OPEN/SHUT		
1CH-115 SA CHILLED WATER TO NESSR FAN CLRS ISOL		OPEN		OPEN/SHUT		
1CH-125 SB CHILLED WATER FROM NESSR FAN CLRS ISOL		SHUT		OPEN/SHUT		
1SA-495 SA NORMAL AIR ISOL		OPEN		OPEN/SHUT		
1FP-1014 NORMAL MAKEUP		OPEN		OPEN/SHUT		
WC-2 SA WATER CHILLER COMPRESSOR		OFF		ON/OFF		
P-4 A-SA CHILLER WC-2 A-SA CHILLED WATER PUMP		OFF		ON/OFF		
1SA-494 SA NORMAL AIR ISOL		OPEN		OPEN/SHUT		
1CH-149 SA CHILLED WATER TO NESSR FAN CLRS ISOL		OPEN		OPEN/SHUT		
1CH-196 SB CHILLED WATER FROM NESSR FAN CLRS ISOL		OPEN		OPEN/SHUT		
1FP-1026 SB NORMAL MAKEUP ISOLATION		OPEN		OPEN/SHUT		
1CH-148 SB CHILLED WATER TO NESSR FAN CLRS ISOL		OPEN		OPEN/SHUT		
1CH-197 SA CHILLED WATER FROM NESSR FAN CLRS ISOL		SHUT		OPEN/SHUT		
1SA-603 SB NORMAL AIR ISOL		OPEN		OPEN/SHUT		
1FP-1025 SA NORMAL MAKEUP ISOL		OPEN		OPEN/SHUT		
WC-2 SB WATER CHILLER COMPRESSOR		ON		ON/OFF		
P-4 SB CHILLER WC-2 B-SB CHILLED WATER PUMP		ON		ON/OFF		

Test Alignment

Component Name and Number	As Found	Pretest	Initial	Post-test	Initial	Verified
1SA-502 SA NORMAL AIR ISOL		OPEN		OPEN/SHUT		
E-17 RAB NORMAL EXHAUST FAN		ON		ON		
E-18 RAB NORMAL EXHAUST FAN		ON		ON		
E-19 RAB NORMAL EXHAUST FAN		ON		ON		
E-20 RAB NORMAL EXHAUST FAN		ON		ON		
AH-92 A-SA MCC A35 FAN COOLER		NA		ON/OFF		
AH-92 B-SB MCC B35 FAN COOLER		NA		ON/OFF		
E-6 A-SA EMERGENCY EXHAUST FAN		OFF		OFF		
E-6 B-SB EMERGENCY EXHAUST FAN		OFF		OFF		
AH-7 A-SA CCW PUMP AREA FAN COOLER		NA		ON/OFF		
AH-7 B-SB CCW PUMP AREA FAN COOLER		NA		ON/OFF		
AH-10 A-SA CSIP SAB AREA FAN COOLER		NA		ON/OFF		
AH-10 B-SB CSIP SAB AREA FAN COOLER		NA		ON/OFF		
AH-20 A-SA AFWP & HVAC CHILLER FAN COOLER		NA		ON/OFF		
AH-20 B-SB AFWP & HVAC CHILLER FAN COOLER		NA		ON/OFF		
AH-6 A-SA CCW PUMP AREA FAN COOLER		NA		ON/OFF		
AH-6 B-SB CCW PUMP AREA FAN COOLER		NA		ON/OFF		
AH-9 A-SA CSIP SA AREA FAN COOLER		NA		ON/OFF		
AH-9 B-SB CSIP SB AREA FAN COOLER		NA		ON/OFF		
AH-19 A-SA AFWP & HVAC CHILLER FAN COOLER		NA		ON/OFF		
AH-19 B-SB AFWP & HVAC CHILLER FAN COOLER		NA		ON/OFF		
AH-28 A-SA 216' RAB MECH PENET AREA FAN COOLER		NA		ON/OFF		
AH-28 B-SB BIT AREA FAN COOLER		NA		ON/OFF		
AH-24 SA AREA FAN COOLER		NA		ON/OFF		
AH-25 SB AREA FAN COOLER		NA		ON/OFF		
AH-23 SA RHT AREA FAN COOLER		NA		ON/OFF		

Test Alignment

Component Name and Number	As Found	Pretest	Initial	Post-test	Initial	Verified
AH-8 SB SW BSTR PUMP AREA FAN COOLER		NA		ON/OFF		
AH-5 A-SA CSP & RHR PUMPS A-SA FAN COOLER		NA		ON/OFF		
AH-5 B-SB CSP & RHR PUMPS B-SB FAN COOLER		NA		ON/OFF		
AH-11 A-SA 236' RAB MECH PENET AREA FAN COOLER		NA		ON/OFF		
AH-11 A-SA 236' RAB MECH PENET AREA FAN COOLER		NA		ON/OFF		
AH-29 SB WPB MCC & INST RACK FAN COOLER		NA		ON/OFF		
S3-A RAB NORMAL SUPPLY FAN		ON		ON/OFF		
S3-B RAB NORMAL SUPPLY FAN		OFF		ON/OFF		
S-64 SA SUPPLY FAN		NA		ON/OFF		
S-65 SB SUPPLY FAN		NA		ON/OFF		
AH-26 A-SA EQUIP ROOM 1 FAN COOLER		NA		ON/OFF		
AH-26 B-SB EQUIP ROOM 2 FAN COOLER		NA		ON/OFF		
E-10 A-SA NORMAL EXHAUST FAN		NA		ON/OFF		
E-10 B-SB NORMAL EXHAUST FAN		NA		ON/OFF		
AH-16 A-SA SUPPLY FAN		NA		ON/OFF		
AH-16 B-SB SUPPLY FAN		NA		ON/OFF		
AH-12 A-SA RAB SWGR ROOM A SUPPLY FAN		NA		ON/OFF		
AH-13 A-SB RAB SWGR ROOM B SUPPLY FAN		NA		ON/OFF		
AC-D4 SA BATTERY ROOM A RETURN DAMPERS		NA		OPEN		
AC-D6 SB BATTERY ROOM B RETURN DAMPER		NA		OPEN		
AH-93SA ROD CONTROL CABINET FAN COOLER		NA		ON/OFF		
CZ-88 SB EXHAUST FAN DISCHARGE ISOL		NA		OPEN/SHUT		
CZ-87 SA EXHAUST FAN DISCHARGE ISOL		NA		OPEN/SHUT		
CZ-86 SB RAB ELECT EQUIP ROOM OAI PURGE ISOL		NA		OPEN/SHUT		
CZ-85 SA RAB ELEC EQUIP ROOM OAI PURGE ISOL		NA		OPEN/SHUT		

Test Alignment

Component Name and Number	As Found	Pretest	Initial	Post-test	Initial	Verified
E-85 A-SB EXHAUST FAN		NA		ON/OFF		
E-85 A-SA EXHAUST FAN		NA		ON/OFF		
E-61 A-SA DAY TANK & SILENCER ROOM EXHAUST FAN		NA		ON/OFF		
E-61 C-SB DAY TANK & SILENCER ROOM EXHAUST FAN		NA		ON/OFF		
AH-85 A-SA ELEC EQUIP ROOM SUPPLY FAN		NA		ON/OFF		
AH-85 C-SB ELEC EQUIP ROOM SUPPLY FAN		NA		ON/OFF		
ACCUMULATORS A DISCHARGE VLV 1SI-246 POSITION		SHUT		SHUT		
ACCUMULATORS B DISCHARGE VLV 1SI-247 POSITION		SHUT		SHUT		
ACCUMULATORS C DISCHARGE VLV 1SI-248 POSITION		SHUT		SHUT		
MCC 1A-21SA CUB 5C 1SI-246 ACCUMULATOR 1A-SA DISCHARGE ISOLATION		OFF		OFF		
MCC 1B-21SB CUB 5C 1SI-247 ACCUMULATOR 1B-SB DISCHARGE ISOLATION		OFF		OFF		
MCC 1A-21SA CUB 3D 1SI-248 ACCUMULATOR 1C-SA DISCHARGE ISOLATION		OFF		OFF		
1SI-246 ACCUMULATOR A DISCHARGE		SHUT		SHUT		
1SI-247 ACCUMULATOR B DISCHARGE		SHUT		SHUT		
1SI-248 ACCUMULATOR C DISCHARGE		SHUT		SHUT		
E-28-A-SA BATTERY ROOM A EXHAUST FAN		NA		ON/OFF		
E-28-B-SA BATTERY ROOM A EXHAUST FAN		NA		ON/OFF		
E-29 A-SB BATTERY ROOM B EXHAUST FAN		NA		ON/OFF		
E-29-B-SB BATTERY ROOM B EXHAUST FAN		NA		ON/OFF		

Feedwater Isolation Response Time

Computer ID Number	Component Number	Train	Actuated	Time (seconds)	Initials
ZFW1830A	1FW-159	A	SHUT		
ZFW1831A	1FW-277	A	SHUT		
ZFW1832A	1FW-217	A	SHUT		

Phase A Isolation Response Time

Computer ID Number	Component Number	Train	Actuated	Time (seconds)	Initials
ZAF1965A	1AF-155	A	SHUT		
ZAF1966A	1AF-159	A	SHUT		
ZAF1967A	1AF-163	A	SHUT		
ZAF1968A	1AF-153	A	SHUT		
ZAF1969A	1AF-157	A	SHUT		
ZAF1970A	1AF-161	A	SHUT		
ZAV2703	AH-37A	A	OFF		
ZAV2704	AH-37B	A	OFF		
ZAV2709	AH-38A	A	OFF		
ZAV2710	AH-38B	A	OFF		
ZAV2715	AH-39A	A	OFF		
ZAV2716	AH-39B	A	OFF		
ZCS0266A	1CS-470	A	SHUT		
ZCS0284A	1CS-7	A	SHUT		
ZCS0285A	1CS-8	A	SHUT		
ZCS0286A	1CS-9	A	SHUT		
ZCT1021	CNMT Spray Pump A-SA	A	STOP		
ZCT1033A	1CT-47	A	SHUT		
ZCT1061A	1CT-24	A	SHUT		
ZFP2588C	1FP-347	A	SHUT		
ZIA2458A	1IA-819	A	SHUT		
ZMD2509A	1ED-94	A	SHUT		
ZMS1258A	1MS-25	A	SHUT		

Phase A Isolation Response Time

Computer ID Number	Component Number	Train	Actuated	Time (seconds)	Initials
ZMS1259A	1MS-27	A	SHUT		
ZMS1260A	1MS-29	A	SHUT		
ZRC0170A	1RC-141	A	SHUT		
ZSI0421A	1SI-263	A	SHUT		
ZSP0668B	1SP-208	A	SHUT		
ZSP0668D	1SP-200	A	SHUT		
ZSP0693B	1SP-917	A	SHUT		
ZSP0693D	1SP-915	A	SHUT		
ZSP0701B	1SP-12	A	SHUT		
ZSP0701D	1SP-941	A	SHUT		
ZSP0704B	1SP-916	A	SHUT		
ZSP7040D	1SP-918	A	SHUT		
ZSP2432A	1SP-60	A	SHUT		
ZSP2434A	1SP-41	A	SHUT		
ZSP2438A	1SP-949	A	SHUT		
ZSP2445A	1SP-85	A	SHUT		
ZSW2253A	1SW-231	A	SHUT		
ZSW2254A	1SW-240	A	SHUT		
ZWG0563A	1ED-164	A	SHUT		
ZWL0562A	1ED-121	A	SHUT		

AFW Pump Response Time

Computer/Instrument ID Number	Component Description	Train	Actuated	Time (seconds)	Initials
NA	AFW Pump A-SA Disch Pres	A	greater than calculated value Section 7.2 Step 37		
ZAF1921A	A-SA AFW Pump Bkr	A	START		

Emergency Service Water Response Time

Computer ID Number	Component Description	Train	Actuated	Time (seconds)	Initials
PSW9101A	ESW Pump A-SA Press	A	> 72 psig		

ECCS Response Time

Computer ID Number	Component Description	Train	Actuated	Time (seconds)	Initials
NA	A-SA CSIP DISH PRESS PI-151B	A	Greater than or Equal to value calculated in step 7.2.12	Section 7.4 Step 1.b	
ZSI0409B	1SI-1	A	OPEN	Section 7.6 Step 7	
ZSI0407B	1SI-4	A	OPEN	Section 7.7 Step 6.a	
ZCS0271A	1CS-238	A	SHUT	Section 7.7 Step 6.a	
ZCS0242B	LCV-115B	A	OPEN		
ZCS0270A	1CS-214	A	SHUT		
ZCS0295B	1CS-746	A	OPEN		
ZCS0221	A CSIP Bkr	A	START		
ZRH0321	A RHR Pump Bkr	A	START		
ZCS0243A	LCV-115 C	A	SHUT		
ZCS0224	C CSIP BKR	A	START		

AC 5/11

NOTE: The ERFIS point for 1CS-746, ZCS0295A and ZCS0295B will read 1CS-169 CSIP SUCT HDR XCONN

CNMT Ventilation Isolation Response Time

Computer ID Number	Component	Train	Actuated	Time (seconds)	Initials
ZCP2698A	1CP-9 SA	A	SHUT		
ZCP2697A	1CP-5 SA	A	SHUT		
ZCP2690A	1CP-4 SA	A	SHUT		
ZCP2691A	1CP-10 SA	A	SHUT		

CNMT Fan Coolers Response Time

Computer ID Number	Component	Train	Actuated	Time (seconds)	Initials
ZCB3083A	AH-2 A-SA	A	STARTED IN LOW SPEED		
ZCB3083B	AH-2 B-SA	A	STARTED IN LOW SPEED		
ZCB3084A	AH-3 A-SA	A	STARTED IN LOW SPEED		
ZCB3084B	AH-3 B-SA	A	STARTED IN LOW SPEED		

AC 5/1

ERFIS Digital Alarm/Polling Rate

NOTE: This attachment will be performed by computer maintenance per step 1 of Section 7.1.

1. Record the As Found Alarm State Code for digital inputs or Warning Limit High for analog points in the Alarm As Found column.

_____

2. Record the As Found Processing Frequency Code (A-F) as stated in the Processing Frequency Field in the Frequency As Found column.

_____

3. If a point ID is listed for Alarm Cutout Point, record this point in the Alarm Cut PID As Found column. If a value is not listed for Alarm Cutout Point, make no entry in the column.

_____

4. If a value is listed for Alarm Cutout Status, record this value in the Alarm Cut ST As Found column. If a value is not listed for Alarm Cutout Status, make no entry in the column.

_____

5. If a point ID is listed for Alarm Cutout Point, clear that field.

_____

6. If a value is listed for Alarm Cutout Status, clear that field.

_____

7. Record the first four or all process control logics in the Cont Logics As Found column.

_____

8. If the Warning As Found is different from the Warning Pretest for analog points, change the Warning Limit High in the computer to the Warning Pretest value.

_____

9. If the Frequency As Found is slower than the Frequency Pretest, change the processing frequency in the computer to the Test Frequency Code.

_____

ERFIS Digital Alarm/Polling Rate

10. If the Process Control Logicals have an N in the second column (alarm) change the N to Y while leaving the other variables as found.

_____

11. If the Alarm As Found is different from the Test Alarm for digital points, change the Alarm As Found to the value listed under Test Alarm.

_____

12. Initial the Test Changes Made column.

_____

ERFIS Digital Alarm/Polling Rate

POINT ID	COMPONENT NUMBER	ALARM AS FOUND	FREQ AS FOUND	ALARM CUT PID AS FOUND	ALARM CUT ST AS FOUND	CONT LOGICS AS FOUND	TEST FREQ	TEST ALARM	TEST CHANGES MADE	RESTORED TO AS FOUND
ZAC3024A	AC-D3 SA						B	F		
ZAC3030B	AC-D4 SA						B	F		
ZAC3034A	AC-D5 SB						B	F		
ZAC3039B	AC-D6 SB						B	F		
ZAF1917A	1AF-64						B	F		
ZAF1918A	1AF-102						B	F		
ZAF1919A	1AF-81						B	F		
ZAF1921A	A AFW BKR						B	T		
ZAF1922A	B AFW BKR						B	T		
ZAF1965A	1AF-165						B	F		
ZAF1966A	1AF-159						B	F		
ZAF1967A	1AF-163						B	F		
ZAF1968A	1AF-153						B	F		
ZAF1969A	1AF-157						B	F		
ZAF1970A	1AF-161						B	F		
ZAV2703	AH-37 A						B	F		
ZAV2704	AH-37 B						B	F		
ZAV2709	AH-38 A						B	F		
ZAV2710	AH-38 B						B	F		
ZAV2715	AH-39 A						B	F		
ZAV2716	AH-39 B						B	F		

ERFIS Digital Alarm/Polling Rate

POINT ID	COMPONENT NUMBER	ALARM AS FOUND	FREQ AS FOUND	ALARM CUT PID AS FOUND	ALARM CUT ST AS FOUND	CONT LOGICS AS FOUND	TEST FREQ	TEST ALARM	TEST CHANGES MADE	RESTORED TO AS FOUND
ZAV2751	S-64 SA						B	F		
ZAV2753	S-65 SB						B	F		
ZAV2758	AH-5 A-SA						B	T		
ZAV2759	AH-5 B-SB						B	T		
ZAV2760	AH-6 A-SA						B	T		
ZAV2761	AH-6 B-SB						B	T		
ZAV2762	AH-7 A-SA						B	T		
ZAV2763	AH-7 B-SB						B	T		
ZAV2764	AH-8 SB						B	T		
ZAV2765	AH-9 A-SA						B	T		
ZAV2766	AH-9 B-SB						B	T		
ZAV2767	AH-10 A-SA						B	T		
ZAV2768	AH-10 B-SB						B	T		
ZAV2776	AH-92 A-SA						B	T		
ZAV2777	AH-92 B-SB						B	T		
ZAV2778	AH-93 SA						B	T		
ZAV2821	AH-16 A-SA						B	F		
ZAV2822	AH-16 B-SB						B	F		
ZAV2834	E-10 A-SA						B	T		
ZAV2835	E-10 B-SB						B	T		
ZAV3021	AH-12 A-SA						B	F		

ERFIS Digital Alarm/Polling Rate

POINT ID	COMPONENT NUMBER	ALARM AS FOUND	FREQ AS FOUND	ALARM CUT PID AS FOUND	ALARM CUT ST AS FOUND	CONT LOGICS AS FOUND	TEST FREQ	TEST ALARM	TEST CHANGES MADE	RESTORED TO AS FOUND
ZAV3035	E-28 A-SA						B	T		
ZAV3036	E-28 B-SA						B	T		
ZAV3031	AH-13 A-SB						B	F		
ZAV3035	E-29 A-SB						B	T		
ZAV3036	E-29 B-SB						B	T		
ZAV3121	E-6 A-SA						B	F		
ZAV3122	E-6 B-SB						B	F		
ZAV3131A	AV-D5 SA						B	F		
ZAV3131C	AV-D3 SA						B	F		
ZAV3132A	AV-D9 SA						B	F		
ZAV3132C	AV-D7 SA						B	F		
ZAV3133A	AV-D13 SA						B	F		
ZAV3133C	AV-D11 SA						B	F		
ZAV3134A	AV-D17 SA						B	F		
ZAV3134C	AV-D15 SA						B	F		
ZAV3135A	AV-D21 SA						B	F		
ZAV3135C	AV-D19 SA						B	F		
ZAV3136A	AV-D23 SA						B	F		

ERFIS Digital Alarm/Polling Rate

POINT ID	COMPONENT NUMBER	ALARM AS FOUND	FREQUENCY AS FOUND	ALARM CUT PID AS FOUND	ALARM CUT ST AS FOUND	CONT LOGICS AS FOUND	TEST FREQ	TEST ALARM	TEST CHANGES MADE	RESTORED TO AS FOUND
ZAV3136C	AV-D25 SA						B	F		
ZAV3137A	AV-D27 SA						B	F		
ZAV3137C	AV-D29 SA						B	F		
ZAV3138A	AV-D31 SA						B	F		
ZAV3138C	AV-D33 SA						B	F		
ZAV3139A	AV-D35 SA						B	F		
ZAV3139C	AV-D37 SA						B	F		
ZAV3140A	AV-D52 SA						B	F		
ZAV3140C	AV-D58 SA						B	F		
ZAV3141A	AV-D62 SA						B	F		
ZAV3141C	AV-D66 SA						B	F		
ZAV3142A	AV-D70 SA						B	F		
ZAV3142C	AV-D74 SA						B	F		
ZAV3143A	AV-D78 SA						B	F		
ZAV3143C	AV-D82 SA						B	F		
ZAV3144A	AV-D86 SA						B	F		
ZAV3152A	AV-D6 SB						B	F		
ZAV3152C	AV-D4 SB						B	F		
ZAV3153A	AV-D10 SB						B	F		
ZAV3153C	AV-D8 SB						B	F		
ZAV3154A	AV-D14 SB						B	F		

AC
5/1

ERFIS Digital Alarm/Polling Rate

POINT ID	COMPONENT NUMBER	ALARM AS FOUND	FREQUENCY AS FOUND	ALARM CUT PID AS FOUND	ALARM CUT ST AS FOUND	CONT LOGICS AS FOUND	TEST FREQ	TEST ALARM	TEST CHANGES MADE	RESTORED TO AS FOUND
ZAV3154C	AV-D12 SB						B	F		
ZAV3155A	AV-D18 SB						B	F		
ZAV3155C	AV-D16 SB						B	F		
ZAV3156A	AV-D22 SB						B	F		
ZAV3156C	AV-D20 SB						B	F		
ZAV3157A	AV-D24 SB						B	F		
ZAV3157C	AV-D26 SB						B	F		
ZAV3158A	AV-D28 SB						B	F		
ZAV3158C	AV-D30 SB						B	F		
ZAV3159A	AV-D32 SB						B	F		
ZAV3159C	AV-D35 SB						B	F		
ZAV3160A	AV-D38 SB						B	F		
ZAV3160C	AV-D38 SB						B	F		
ZAV3161A	AV-D53 SB						B	F		
ZAV3161C	AV-D59 SB						B	F		
ZAV3162A	AV-D63 SB						B	F		
ZAV3162C	AV-D67 SB						B	F		
ZAV3163A	AV-D71 SB						B	F		
ZAV3163C	AV-D75 SB						B	F		
ZAV3164A	AV-D79 SB						B	F		
ZAV3164C	AV-D83 SB						B	F		

ERFIS Digital Alarm/Polling Rate

POINT ID	COMPONENT NUMBER	ALARM AS FOUND	FREQUENCY AS FOUND	ALARM CUT PID AS FOUND	ALARM CUT ST AS FOUND	CONT LOGICS AS FOUND	TEST FREQ	TEST ALARM	TEST CHANGES MADE	RESTORED TO AS FOUND
ZAV3165A	AV-D87 SB						B	F		
ZAV3173	E-17						B	T		
ZAV3174	E-18						B	T		
ZAV3175	E-19						B	T		
ZAV3176	E-20						B	T		
ZAV3199	S-3 A						B	F		
ZAV3200	S-3B						B	F		
ZBD1191A	1BD-7						B	F		
ZBD1192A	1BD-26						B	F		
ZBD1193A	1BD-45						B	F		
ZBD1194A	1BD-1						B	F		
ZBD1195A	1BD-20						B	F		
ZBD1196A	1BD-39						B	F		
ZBD1207A	1BD-11						B	F		
ZBD1209A	1BD-30						B	F		
ZBD1211A	1BD-49						B	F		
ZCB2688A	1CB-2						B	F		
ZCB2689A	1CB-6						B	F		
ZCB3082A	AH-1 A-SB						B	T		
ZCB3082B	AH-1 B-SB						B	T		
ZCB3083A	AH-2 A-SA						A	T		
ZCB3083B	AH-2 A-SA						A	T		

AC 5/1

AC 5/1

ERFIS Digital Alarm/Polling Rate

POINT ID	COMPONENT NUMBER	ALARM AS FOUND	FREQUENCY AS FOUND	ALARM CUT PID AS FOUND	ALARM CUT ST AS FOUND	CONT LOGICS AS FOUND	TEST FREQ	TEST ALARM	TEST CHANGES MADE	RESTORED TO AS FOUND
ZCB3084A	AH-3 A-SA						A	T		
ZCB3084B	AH-3 B-SA						A	T		
ZCB3085A	AH-4 A-SB						B	T		
ZCB3085B	AH-4 B-SB						B	T		
ZCC0941A	A CCW PUMP						B	T		
ZCC0942A	B CCW PUMP						B	T		
ZCC0943A	C CCW PUMP						B	T		
ZCC0960A	1CC-176						B	F		
ZCC0961A	1CC-202						B	F		
ZCC0965A	1CC-304						B	F		
ZCC0966A	1CC-305						B	F		
ZCC0972A	1CC-114						B	F		
ZCC0973A	1CC-115						B	F		
ZCH2608A	1CH-115						B	F		
ZCH2609A	1CH-116						B	F		
ZCH2638A	1CH-148						B	F		
ZCH2639A	1CH-149						B	F		
ZCP2690A	1CP-4						A	F		
ZCP2691A	1CP-10						A	F		
ZCP2692A	1CP-7						B	F		
ZCP2693A	1CP-1						B	F		
ZCP2694	E-5A						B	F		

ERFIS Digital Alarm/Polling Rate

POINT ID	COMPONENT NUMBER	ALARM AS FOUND	FREQUENCY AS FOUND	ALARM CUT PID AS FOUND	ALARM CUT ST AS FOUND	CONT LOGICS AS FOUND	TEST FREQ	TEST ALARM	TEST CHANGES MADE	RESTORED TO AS FOUND
ZCP2698A	1CP-9						B	F		
ZCP2699A	1CP-6						B	F		
ZCP2700A	1CP-3						B	F		
ZCP2694	E-5 A						B	F		
ZCP2749	E-5 B						B	F		
ZCS0221	A CSIP						A	T		
ZCS0222	B CSIP						B	T		
ZCS0224	C CSIP						A	T		
ZCS0242B	LCV-115B						B	F		
ZCS0243A	LCV-115C						B	F		
ZCS0244B	LCV-115D						B	F		
ZCS0245A	LCV-115E						B	F		
ZCS0265A	1CS-472						B	F		
ZCS0266A	1CS-470						B	F		
ZCS0270A	1CS-214						B	F		
ZCS0271A	1CS-238						B	F		
ZCS0272A	1CS-235						B	F		
ZCS0273A	1CS-182						B	F		
ZCS0274A	1CS-196						B	F		
ZCS0276A	1CS-210						B	F		
ZCS0284A	1CS-7						B	F		
ZCS0285A	1CS-8						B	F		

AC 511

ERFIS Digital Alarm/Polling Rate

POINT ID	COMPONENT NUMBER	ALARM AS FOUND	FREQUENCY AS FOUND	ALARM CUT PID AS FOUND	ALARM CUT ST AS FOUND	CONT LOGICS AS FOUND	TEST FREQ	TEST ALARM	TEST CHANGES MADE	RESTORED TO AS FOUND
ZCS0286A	1CS-9						B	F		
ZCS0287A	1CS-11						B	F		
ZCT1021	A CNMT SPR						B	F		
ZCT1022	B CNMT SPR						B	F		
ZCT1033A	1CT-47						B	F		
ZCT1034A	1CT-95						B	F		
ZCT1061A	1CT-24						B	F		
ZCT1062A	1CT-25						B	F		
ZCV2774	AH-11 A-SA						B	T		
ZCV2775	AH-11 B-SB						B	T		
ZCV3041	AH-19 A-SA						B	T		
ZCV3042	AH-19 B-SB						B	T		
ZCV3043	AH-20 A-SA						B	T		
ZCV3044	AH-20 B-SB						B	T		
ZCV3045	AH-23 SA						B	T		
ZCV3046	AH-24 SA						B	T		
ZCV3047	AH-25 SB						B	T		
ZCV3048	AH-26 A-SA						B	T		
ZCV3049	AH-26 B-SB						B	T		
ZCV3052	AH-28 A-SA						B	T		
ZCV3053	AH-28 B-SB						B	T		
ZCV3057	AH-29 SB						B	T		

ERFIS Digital Alarm/Polling Rate

POINT ID	COMPONENT NUMBER	ALARM AS FOUND	FREQUENCY AS FOUND	ALARM CUT PID AS FOUND	ALARM CUT ST AS FOUND	CONT LOGICS AS FOUND	TEST FREQ	TEST ALARM	TEST CHANGES MADE	RESTORED TO AS FOUND
ZCV3261	E-86 A-SA						B	T		
ZCV3263	AH-85 A-SA						B	F		
ZCV3268	E-61 A-SA						B	F		
ZCV3272	E-88 C-SB						B	T		
ZCV3274	AH-85 C-SB						B	F		
ZCV3279	E-61 C-SB						B	F		
ZCV3283	E-85 A-SA						B	T		
ZCV3285	E-85 A-SB						B	T		
ZCX2604	P-4 A-SA BKR						B	T		
ZCX2610A	1CH-126						B	F		
ZCX2611A	1CH-125						B	F		
ZCX2634	P-4 B-SB BKR						B	T		
ZCX2640A	1CH-196						B	F		
ZCX2641A	1CH-197						B	F		
ZCY2623	WC-2 A-SA						B	T		
ZCY2652	WC-2 B-SB						B	T		
ZCZ2827A	CZ-B5 SA						B	F		
ZCZ2828A	CS-B6 SB						B	F		
ZCZ2836A	CZ-B7 SA						B	F		
ZCZ2837A	CZ-B8 SB						B	F		
ZCZ2842A	CZ-B1 SA						B	F		

ERFIS Digital Alarm/Polling Rate

POINT ID	COMPONENT NUMBER	ALARM AS FOUND	FREQUENCY AS FOUND	ALARM CUT PID AS FOUND	ALARM CUT ST AS FOUND	CONT LOGICS AS FOUND	TEST FREQ	TEST ALARM	TEST CHANGES MADE	RESTORED TO AS FOUND
ZCZ2943A	CZ-B2 SB						B	F		
ZCZ2946	AH-15 A-SA						B	F		
ZCZ2947	AH-15 B-SB						B	F		
ZCZ2957A	CZ-B4 SB						B	F		
ZCZ2958A	CZ-B3 SA						B	F		
ZCZ2962A	CZ-D16 SA						B	F		
ZCZ2963A	CZ-D11 SB						B	F		
ZCZ2964A	CZ-B17 SA						B	F		
ZCZ2965A	CZ-B18 SB						B	F		
ZCZ2967A	CZ-B13 SA						B	F		
ZCZ2968A	CZ-B14 SB						B	F		
ZCZ2976A	CZ-B9 SA						B	F		
ZCZ2978A	CZ-B10 SB						B	F		
ZCZ2977A	CZ-B11 SA						B	F		
ZCZ2978A	CZ-B12 SB						B	F		
ZCZ2980	R2 A-SA						B	F		
ZCZ2983	R2 B-SB						B	F		
ZEE1465D	1B1 A-SB BKR						B	F		
ZEE1465G	1A1 A-SA BKR						B	F		
ZFP2588C	1FP-347						B	F		
ZFP2621A	1FP-1015						B	F		

ERFIS Digital Alarm/Polling Rate

POINT ID	COMPONENT NUMBER	ALARM AS FOUND	FREQUENCY AS FOUND	ALARM CUT PID AS FOUND	ALARM CUT ST AS FOUND	CONT LOGICS AS FOUND	TEST FREQ	TEST ALARM	TEST CHANGES MADE	RESTORED TO AS FOUND
ZFP2622A	1FP-1014						B	F		
ZFP2658A	1FP-1026						B	F		
ZFP2659A	1FP-1025						B	F		
ZFW0801	1FW-133						B	F		
ZFW0802	1FW-249						B	F		
ZFW0803	1FW-191						B	F		
ZFW0804	1FW-140						B	F		
ZFW0805	1FW-256						B	F		
ZFW0806	1FW-198						B	F		
ZFW1801A	A MFP BKR						B	F		
ZFW1803A	B MFP BKR						B	F		
ZFW1827A	1FW-307						B	F		
ZFW1828A	1FW-319						B	F		
ZFW1829A	1FW-313						B	F		
ZFW1830A	1FW-159						B	F		
ZFW1831A	1FW-277						B	F		
ZFW1832A	1FW-217						B	F		
ZFW1865A	1FW-165						B	F		
ZFW1866A	1FW-281						B	F		
ZFW1867A	1FW-223						B	F		
ZFW1868A	1FW-163						B	F		
ZFW1869A	1FW-279						B	F		

AC
5/1

ERFIS Digital Alarm/Polling Rate

POINT ID	COMPONENT NUMBER	ALARM AS FOUND	FREQUENCY AS FOUND	ALARM CUT PID AS FOUND	ALARM CUT ST AS FOUND	CONT LOGICS AS FOUND	TEST FREQ	TEST ALARM	TEST CHANGES MADE	RESTORED TO AS FOUND
ZFW1870A	1FW-221						B	F		
ZIA2458A	1IA-819						B	F		
ZMD2509A	1ED-94						B	F		
ZMD2510A	1ED-95						B	F		
ZMS0984A	1MS-81						B	F		
ZMS0985A	1MS-83						B	F		
ZMS0986A	1MS-85						B	F		
ZMS1001A	1MS-80						B	F		
ZMS1003A	1MS-82						B	F		
ZMS1005A	1MS-84						B	F		
ZMS1258A	1MS-25						B	F		
ZMS1259A	1MS-27						B	F		
ZMS1260A	1MS-29						B	F		
ZMS1273A	1MS-231						B	F		
ZMS1274A	1MS-266						B	F		
ZMS1275A	1MS-301						B	F		
ZMS1285A	1MS-336						B	F		
ZRC0165A	1RC-161						B	F		
ZRC0169A	1RC-144						B	F		
ZRC0170A	1RC-141						B	F		
ZRH0321	A RHR						A	T		
ZRH0322	B RHR						A	T		

ERFIS Digital Alarm/Polling Rate

POINT ID	COMPONENT NUMBER	ALARM AS FOUND	FREQUENCY AS FOUND	ALARM CUT PID AS FOUND	ALARM CUT ST AS FOUND	CONT LOGICS AS FOUND	TEST FREQ	TEST ALARM	TEST CHANGES MADE	RESTORED TO AS FOUND
ZSA2613A	1SA-495						B	F		
ZSA2614A	1SA-494						B	F		
ZSA2643A	1SA-503						B	F		
ZSA2644A	1SA-502						B	F		
ZSC2291A	ESW SCRN WSH PUMP A						B	T		
ZSC2292B	1SC-20						B	F		
ZSC2293A	MN RSVR TRV SCRN A BKR						B	F		
ZSC2293B	MN RSVR TRV SCRN B STAT						B	F		
ZSC2295B	1SC-40						B	F		
ZSC2296A	AUX RSVR TRV SCRN A BKR						B	F		
ZSC2296B	AUX RSVR TRV SCRN A STAT						B	F		
ZSC2299A	ESW SCRN WSH PUMP B						B	T		
ZSC2300B	1SC-30						B	F		
ZSC2301A	MN RSVR TRV SCRN B BKR						B	F		
ZSC2301B	MN RSVR TRV SCRN B STAT						B	F		

AC 5/1

ERFIS Digital Alarm/Polling Rate

POINT ID	COMPONENT NUMBER	ALARM AS FOUND	FREQUENCY AS FOUND	ALARM CUT PID AS FOUND	ALARM CUT ST AS FOUND	CONT LOGICS AS FOUND	TEST FREQ	TEST ALARM	TEST CHANGES MADE	RESTORED TO AS FOUND
ZSC2303B	1SC-37						B	F		
ZSC2304A	AUX RSVR TRV SCRN B BKR						B	F		
ZSC2304B	AUX RSVR TRV SCRN B STAT.						B	F		
ZSI0407B	1SI-4						B	F		
ZSI0408B	1SI-3						B	F		
ZSI0409B	1SI-1						B	F		
ZSI0410B	1SI-2						B	F		
ZSI0411B	1SI-246						B	F		
ZSI0412B	1SI-247						B	F		
ZSI0413B	1SI-248						B	F		
ZSI0420A	1SI-179						B	F		
ZSI0421A	1SI-263						B	F		
ZSI0434A	1SI-287						B	F		
ZSI0438A	1SI-264						B	F		
ZSP0667B	1SP-209						B	T		
ZSP0667D	1SP-201						B	T		
ZSP0668B	1SP-208						B	T		

ERFIS Digital Alarm/Polling Rate

POINT ID	COMPONENT NUMBER	ALARM AS FOUND	FREQUENCY AS FOUND	ALARM CUT PID AS FOUND	ALARM CUT ST AS FOUND	CONT LOGICS AS FOUND	TEST FREQ	TEST ALARM	TEST CHANGES MADE	RESTORED TO AS FOUND
ZSP0668D	1SP-200						B	T		
ZSP0693B	1SP-917						B	T		
ZSP0693D	1SP-915						B	T		
ZSP0701B	1SP-12						B	T		
ZSP0701D	1SP-941						B	T		
ZSP0703B	1SP-16						B	T		
ZSP0703D	1SP-939						B	T		
ZSP0704B	1SP-916						B	T		
ZSP0704D	1SP-918						B	T		
ZSP0705B	1SP-42						B	T		
ZSP0705D	1SP-62						B	T		
ZSP0706B	1SP-919						B	T		
ZSP0706D	1SP-943						B	T		
ZSP1198A	1SP-214						B	F		
ZSP1199A	1SP-219						B	F		
ZSP1200A	1SP-224						B	F		
ZSP1201A	1SP-216						B	F		
ZSP1202A	1SP-221						B	F		
ZSP1203A	1SP-226						B	F		
ZSP1204A	1SP-217						B	F		
ZSP1205A	1SP-222						B	F		
ZSP1206A	1SP-227						B	F		

ERFIS Digital Alarm/Polling Rate

POINT ID	COMPONENT NUMBER	ALARM AS FOUND	FREQUENCY AS FOUND	ALARM CUT PID AS FOUND	ALARM CUT ST AS FOUND	CONT LOGICS AS FOUND	TEST FREQ	TEST ALARM	TEST CHANGES MADE	RESTORED TO AS FOUND
ZSP2431A	1SP-59						B	F		
ZSP2432A	1SP-60						B	F		
ZSP2433A	1SP-40						B	F		
ZSP2434A	1SP-41						B	F		
ZSP2437A	1SP-948						B	F		
ZSP2438A	1SP-949						B	F		
ZSP2442A	1SP-78						B	F		
ZSP2443A	1SP-81						B	F		
ZSP2444A	1SP-84						B	F		
ZSP2445A	1SP-85						B	F		
ZSW2207A	1SW-39						B	F		
ZSW2207B	1SW-39						B	T		
ZSW2208A	1SW-40						B	F		
ZSW2208B	1SW-40						B	T		
ZSW2211A	A ESW PUMP						A	T		
ZSW2212A	B ESW PUMP						B	T		
ZSW2233A	A ESW BSTR						B	T		
ZSW2234A	B ESW BSTR						B	T		
ZSW2253A	1SW-231						B	F		
ZSW2254A	1SW-240						B	F		
ZSW2255A	1SW-242						B	F		
ZSW2272A	1SW-206						B	F		

ERFIS Digital Alarm/Polling Rate

POINT ID	COMPONENT NUMBER	ALARM AS FOUND	FREQUENCY AS FOUND	ALARM CUT PID AS FOUND	ALARM CUT ST AS FOUND	CONT LOGICS AS FOUND	TEST FREQ	TEST ALARM	TEST CHANGES MADE	RESTORED TO AS FOUND
ZSW2272C	1SW-179						B	F		
ZSW2273A	1SW-204						B	F		
ZSW2273C	1SW-180						B	F		
ZSW2280A	1SW-275						B	F		
ZSW2280B	1SW-275						B	T		
ZSW2282A	1SW-274						B	F		
ZSW2282B	1SW-274						B	T		
ZSW2284A	1SW-276						B	F		
ZSW2286A	1SW-270						B	T		
ZSW2286B	1SW-270						B	F		
ZSW2287A	1SW-271						B	T		
ZSW2287B	1SW-271						B	F		
ZWG0563A	1ED-164						B	F		
ZWG0569A	1ED-161						B	F		
ZWL0562A	1ED-121						B	F		
ZWL0565A	1ED-125						B	F		

Equipment Verification

Computer ID Number	Component	Surveillance Requirement	Actuated	Initials
ZAC3030A	AC-D4SA		OPEN	
ZAC3039A	AC-D6SB		OPEN	
ZAV2751	S-64 SA		START	
ZAV2753	S-65 SB		START	
ZAV2758	AH-5 A-SA		START	
ZAV2759	AH-5 B-SB		START	
ZAV2760	AH-6 A-SA		START	
ZAV2761	AH-6 B-SB		START	
ZAV2762	AH-7 A-SA		START	
ZAV2763	AH-7 B-SB		START	
ZAV2764	AH-8 SB		START	
ZAV2765	AH-9 A-SA		START	
ZAV2766	AH-9 B-SB		START	
ZAV2767	AH-10 A-SA		START	
ZAV2768	AH-10 B-SB		START	
ZAV2776	AH-92 A-SA		START	
ZAV2777	AH-92 B-SB		START	
ZAV2778	AH-93 SA		START	
ZAV2821	AH-16 A-SA		START	
ZAV2822	AH-16 B-SB		START	
ZAV2834	E-10 A-SA		STOP	
ZAV2835	E-10 B-SB		STOP	
ZAV3021	AH-12 A-SA		START	
ZAV3025	E-28 A-SA		STOP	
ZAV3026	E-28 B-SA		STOP	
ZAV3031	AH-13 A-SB		START	

Equipment Verification

Computer ID Number	Component	Surveillance Requirement	Actuated	Initials
ZAV3035	E-29 A-SB		STOP	
ZAV3036	E-29 B-SB		STOP	
ZBD1191A	1BD-7	4.6.3.2.d	SHUT	
ZBD1192A	1BD-26	4.6.3.2.d	SHUT	
ZBD1193A	1BD-45	4.6.3.2.d	SHUT	
ZBD1194A	1BD-1	4.6.3.2.d	SHUT	
ZBD1195A	1BD-20	4.6.3.2.d	SHUT	
ZBD1196A	1BD-39	4.6.3.2.d	SHUT	
ZBD1207A	1BD-11	4.6.3.2.d	SHUT	
ZBD1209A	1BD-30	4.6.3.2.d	SHUT	
ZBD1211A	1BD-49	4.6.3.2.d	SHUT	
ZCB2688A	1CB-2SA	4.6.3.2.c	SHUT	
ZCB2689A	1CB-6SB	4.6.3.2.c	SHUT	
ZCC0941A	CCW Pump A-SA Bkr	4.7.3.b.2	SHUT	
ZCC0942A	CCW Pump B-SB Bkr	4.7.3.b.2	SHUT	
ZCC0960A	1CC-176	4.6.3.2.a	SHUT	
ZCC0961A	1CC-202	4.6.3.2.a	SHUT	
ZCC0965A	1CC-304	4.7.3.b.1	SHUT	
ZCC0966A	1CC-305	4.7.3.b.1	SHUT	
ZCC0972A	1CC-114	4.7.3.b.1	SHUT	
ZCC0973A	1CC-115	4.7.3.b.1	SHUT	
ZCH2608A	1CH-115	4.7.13.b.1	SHUT	
ZCH2609A	1CH-116	4.7.13.b.1	SHUT	
ZCH2638A	1CH-148	4.7.13.b.1	SHUT	
ZCH2639A	1CH-149	4.7.13.b.1	SHUT	

AC 5/1

Equipment Verification

Computer ID Number	Component	Surveillance Requirement	Actuated	Initials
ZCP2692B	1CP-7SB	4.6.3.2.c	SHUT	
ZCP2693B	1CP-1SB	4.6.3.2.c	SHUT	
ZCP2699A	1CP-6SB	4.6.3.2.c	SHUT	
ZCP2700A	1CP-3SB	4.6.3.2.c	SHUT	
ZCS0265A	1CS-472	4.6.3.2.a	SHUT	
ZCS0287A	1CS-11	4.6.3.2.a	SHUT	
ZCT1022	CNMT Spray Pump B-SB		STOP	
ZCT1034A	1CT-95	4.6.2.2.c	SHUT	
ZCT1062A	1CT-25	4.6.2.2.c	SHUT	
ZCV2774	AH-11 A-SA		START	
ZCV2775	AH-11 B-SB		START	
ZCV3041	AH-19 A-SA		START	
ZCV3042	AH-19 B-SB		START	
ZCV3043	AH-20 A-SA		START	
ZCV3044	AH-20 B-SB		START	
ZCV3045	AH-23 SA		START	
ZCV3046	AH-24 SA		START	
ZCV3047	AH-25 SB		START	
ZCV3048	AH-26 A-SA		START	
ZCV3049	AH-26 B-SB		START	
ZCV3052	AH-28 A-SA		START	
ZCV3053	AH-28 B-SB		START	
ZCV3057	AH-29 SB		START	
ZCV3261	E-86 A-SA		START	
ZCV3263	AH-85 A-SA		START	
ZCV3268	E-61 A-SA		START	
ZCV3272	E-86 C-SB		START	

Equipment Verification

Computer ID Number	Component	Surveillance Requirement	Actuated	Initials
ZCV3274	AH-85 C-SB		START	
ZCV3279	E-61 C-SB		START	
ZCV3283	E-85 A-SA		START	
ZCV3285	E-85 A-SB		START	
ZCX2604	P-4 A-SA	4.7.13.b.2	START	
ZCX2610A	1CH-126	4.7.13.b.1	SHUT	
ZCX2611A	1CH-125	4.7.13.b.1	SHUT	
ZCX2634	P-4 B-SB	4.7.13.b.2	START	
ZCX2640A	1CH-196	4.7.13.b.1	SHUT	
ZCX2641A	1CH-197	4.7.13.b.1	SHUT	
ZCY2623	WC-2 A-SA	4.7.13.b.2	START	
ZCY2652	WC-2 B-SB	4.7.13.b.2	START	
ZCZ2827A	CZ-B5SA		SHUT	
ZCZ2828A	CZ-B6SB		SHUT	
ZFP2621A	1FP-1015		SHUT	
ZFP2622A	1FP-1014		SHUT	
ZFP2658A	1FP-1026		SHUT	
ZFP2659A	1FP-1025		SHUT	
ZMD2510A	1ED-95	4.6.3.2.a	SHUT	
ZRC0165A	1RC-161	4.6.3.2.a	SHUT	
ZRC0169A	1RC-144	4.6.3.2.a	SHUT	
ZSA2613A	1SA-495		SHUT	
ZSA2614A	1SA-494		SHUT	
ZSA2643A	1SA-503		SHUT	
ZSA2644A	1SA-502		SHUT	
ZSC2291A	ESW Screen Wash Pump A-SA		START	
ZSC2299A	ESW Screen Wash Pump B-SB		START	

Equipment Verification

Computer ID Number	Component	Surveillance Requirement	Actuated	Initials
ZSI0411B	1SI-246		OPEN	
ZSI0412B	1SI-247		OPEN	
ZSI0413B	1SI-248		OPEN	
ZSI0420A	1SI-179	4.6.3.2.a	OPEN	
ZSI0434A	1SI-287	4.6.3.2.a	SHUT	
ZSI0438A	1SI-264	4.6.3.2.a	SHUT	
ZSP0667B	1SP-209	4.6.3.2.a	SHUT	
ZSP0667D	1SP-201	4.6.3.2.a	SHUT	
ZSP0705B	1SP-42	4.6.3.2.a	SHUT	
ZSP0705D	1SP-62	4.6.3.2.a	SHUT	
ZSP0706B	1SP-919	4.6.3.2.a	SHUT	
ZSP0706D	1SP-943	4.6.3.2.a	SHUT	
ZSP0703B	1SP-916	4.6.3.2.d	SHUT	
ZSP0703D	1SP-918	4.6.3.2.d	SHUT	
ZSP0704B	1SP-16	4.6.3.2.d	SHUT	
ZSP0704D	1SP-939	4.6.3.2.d	SHUT	
ZSP1198A	1SP-214	4.6.3.2.d	SHUT	
ZSP1199A	1SP-219	4.6.3.2.d	SHUT	
ZSP1200A	1SP-224	4.6.3.2.d	SHUT	
ZSP1201A	1SP-216	4.6.3.2.d	SHUT	
ZSP1202A	1SP-221	4.6.3.2.d	SHUT	
ZSP1203A	1SP-226	4.6.3.2.d	SHUT	
ZSP1204A	1SP-217	4.6.3.2.d	SHUT	
ZSP1205A	1SP-222	4.6.3.2.d	SHUT	
ZSP1206A	1SP-227	4.6.3.2.d	SHUT	

Equipment Verification

Computer ID Number	Component	Surveillance Requirement	Actuated	Initials
ZSP2431A	1SP-59	4.6.3.2.a	SHUT	
ZSP2433A	1SP-40	4.6.3.2.a	SHUT	
ZSP2437A	1SP-948	4.6.3.2.a	SHUT	
ZSP2442A	1SP-78	4.6.3.2.a	SHUT	
ZSP2443A	1SP-81	4.6.3.2.a	SHUT	
ZSP2444A	1SP-84	4.6.3.2.a	SHUT	
ZSW2255A	1SW-242	4.6.3.2.a	SHUT	
ZWG0569A	1ED-161	4.6.3.2.a	SHUT	
ZWL0565A	1ED-125	4.6.3.2.a	SHUT	

ERFIS Analog Alarm/Polling Rate

1. Record the As Found Alarm State Code for digital inputs or Warning Limit High for analog points in the Alarm As Found column.

2. Record the As Found Processing Frequency Code (A-F) as stated in the Processing Frequency Field in the Polling As Found column.

3. If an ERFIS point ID is listed for Alarm Cutout Point, record this point in the Alarm Cut PID As Found column. If a value is not listed for Alarm Cutout Point, make no entry in the column.

4. If a value is listed for Alarm Cutout Status, record this value in the Alarm Cut ST As Found column. If a value is not listed for Alarm Cutout Status, make no entry in the column.

5. If an ERFIS point ID is listed for Alarm Cutout Point, clear that field.

6. If a value is listed for Alarm Cutout Status, clear that field.

7. Record the first four or all process control logicals in the Cont Logics As Found column.

8. If the Warning As Found is different from the Warning Pretest for analog points, change the Warning Limit High in the computer to the Warning Pretest value.

9. If the Polling As Found is slower than the Polling Pretest, change the processing frequency in the computer to the Test Frequency Code.

ERFIS Analog Alarm/Polling Rate

10. If the Process Control Logicals have an N in the second column (alarm) change the N to Y while leaving the other variables as found.

_____

11. Deleted

AC 5/1

12. Initial the Test Changes Made column.

_____

ERFIS Analog Alarm/Polling Rate

Point ID	Component Number	Warning As Found	Polling As Found	Cont Logics As Found	Warning Pretest	Polling Pretest	Test Changes Made	Restored To As Found	Alarm Cut PIC As Found	Alarm Cut St As Found
PAF2150A	AFW Disch				1590 psig	B				
EEE6955B	EDG Volt				NA	B				
EEE6955A	EDG Volt				7590 Volt	B				
PSW9101A	ESW Press				72 psig	B				
FRH0605A	RHR Flow				NA	A				
EEE6955A	EDG Volt				* 6200 Volts	NA				

* This is the Warning Low Limit

Jumpers and Lifted Leads

RESPONSE TIME - TRAIN A SI

Installation Section	Step	Location	Jumpers	Function	Removal Section	Step	CWD
7.1	9.b	ARP-10(R2)	Term 43 to 107	B MFP Permissives	7.4	3.b	1853
7.1	9.a	ARP-10(F2)	Term 41 to 98	A MFP Permissive	7.4	3.a	1851
7.1	10	ARP-10(F2)	Term 107 to 108	MFP Seal Water Permissives	7.4	4	1851
7.1	11.c	ARP-10(R4)	11854G/W Term 84 to CR9/1854 Term 5	B MFP Trips, except SI	7.4	5.a(1)	1854
7.1	11.f	ARP-10(F4)	11852G/W Term 112 to CR9/1852 Term 5	A MFP Trips, except SI	7.4	5.b(1)	1852
7.1	13	ARP-17(R1)	Term 44 to 45	CNMT Low Δp for CNMT Normal & CPP Supply Fans	7.14	11	2706
7.1	15.a(1)	ARP-19A(SA)F3	Term 44 to 58	Low SG Pressure to SG Blowdown Valve 1BD-11	7.14	8.a	1207
7.1	15.a(2)	ARP-19A(SA)F3	Term 93 to 107	Low SG Pressure to SG Blowdown Valve 1BD-30	7.14	8.b	1209
7.1	15.a(3)	ARP-19A(SA)F3	Term 21 to 35	Low SG Pressure to SG Blowdown Valve 1BD-49	7.14	8.c	1211
7.1	15.b(1)	ARP-19B(SB)F3	Term 44 to 58	Low SG Pressure to SG Blowdown Valve 1BD-7	7.14	8.d	1191
7.1	15.b(2)	ARP-19B(SB)F3	Term 26 to 40	Low SG Pressure to SG Blowdown Valve 1BD-1	7.14	8.e	1194
7.1	15.b(3)	ARP-19B(SB)F3	Term 7 to 21	Low SG Pressure to SG Blowdown Valve 1BD-26	7.14	8.f	1192
7.1	15.b(4)	ARP-19B(SB)F3	Term 104 to 118	Low SG Pressure to SG Blowdown Valve 1BD-20	7.14	8.g	1195
7.1	15.b(5)	ARP-19B(SB)F3	Term 63 to 77	Low SG Pressure to SG Blowdown Valve 1BD-45	7.14	8.h	1193
7.1	15.b(6)	ARP-19B(SB)F3	Term 83 to 97	Low SG Pressure to SG Blowdown Valve 1BD-39	7.14	8.i	1196
7.1	16.b	MTC-1A SA	10293H-SA/O to Pnl 3 Term 20	Alt Miniflow Computer Point	7.14	7.c	317
7.1	16.c	MTC-1A SA	10293H-SA/G to Pnl 3 Term 23	Alt Miniflow Computer Point	7.14	7.b	317
7.1	16.d	MTC-1A SA	10293H-SA/U to Pnl 3 Term 22	Alt Miniflow Computer Point	7.14	7.a	317

Jumpers and Lifted Leads

RESPONSE TIME - TRAIN A SI

Installation Section	Step	Location	Jumpers	Function	Removal Section	Step	CWD
7.1	18.a(1)	ARP-4A(SA)F1	Term 105 to 106	CNMT Fan Cooler Lead Fan Selector Switch AH-2	7.14	3.a	2679
7.1	18.a(2)	ARP-4A(SA)F3	Term 116 to 117	CNMT Fan Cooler Lead Fan Selector Switch AH-3	7.14	3.b	2679
7.1	18.b(1)	ARP-4B(SB)F1	Term 116 to 117	CNMT Fan Cooler Lead Fan Selector Switch AH-1	7.14	3.c	2740
7.1	18.b(2)	ARP-4B(SB)F3	Term 116 to 117	CNMT Fan Cooler Lead Fan Selector Switch AH-4	7.14	3.d	2740
7.1	32.a(2)	PIC-Cab 1	20K Test Pot Between TBF-10 and TBF-11	LT-474 Transmitter Signal	7.14	14.a(1)	993
7.1	32.b(2)	PIC-Cab 2	20K Test Pot Between TBF-10 and TBF-11	LT-475 Transmitter Signal	7.14	14.b(1)	993
7.1	32.c(2)	PIC-Cab 3	20K Test Pot Between TBF-10 and TBF-11	LT-476 Transmitter Signal	7.14	14.c(1)	994
7.1	33.a(2)	PIC Cab 1	20K Test Pot Between TBF-13 and TBF 14	LT-484 Transmitter Signal	7.14	15.a(1)	993
7.1	33.b(2)	PIC-Cab 2	20K Test Pot Between TBF-13 and TBF-14	LT-485 Transmitter Signal	7.14	15.b(1)	993
7.1	33.c(2)	PIC-Cab 3	20K Test Pot Between TBF-13 and TBF-14	LT-486 Transmitter Signal	7.14	15.c(1)	994
7.1	34.a(2)	PIC-Cab 1	20K Test Pot Between TBF-16 and TBF-17	LT-494 Transmitter Signal	7.14	16.a(1)	993
7.1	34.b(2)	PIC-Cab 2	20K Test Pot Between TBF-16 and TBF-17	LT-495 Transmitter Signal	7.14	16.b(1)	993
7.1	34.c(2)	PIC-Cab 3	20K Test Pot Between TBF-16 and TBF-17	LT-496 Transmitter Signal	7.14	16.c(1)	994

Jumpers and Lifted Leads

RESPONSE TIME - TRAIN A SI

Installation Section	Step	Location	Lifted Leads	Function	Removal Section	Step	CWD
7.1	8	SSP(A) Output 1	11988W-SA/W on TB604 Term 4	Blocks Primary SI Start to A EDG	7.4	9	2008
7.1	11.a	ARP-10(R4)	Leads C1-5 and E1-5 R 3 on CR9/1854 Term 5	Block B MFP Trips	7.4	5.a(3)	1854
7.1	11.b	ARP-10(R4)	11854G/W on Term 84	Block B MFP Trips	7.4	5.a(2)	1854
7.1	11.d	ARP-10(F4)	Leads TB112 and F1 2 F1 on CR9/1852 Term 5	Block A MFP Trips	7.4	5.b(3)	1852
7.1	11.e	ARP-10(F4)	11852G/W on Term 112	Block A MFP Trips	7.4	5.b(2)	1852
7.1	12.a	ARP-9(R2)	11845E/W on Term 53	Block Low SG Pressure to MFW Valves & Pumps	7.4	6.a	1845
7.1	12.b	ARP-9(F4)	11845D/W on Term 49	Block Low SG Pressure to MFW Valves & Pumps	7.4	6.b	1845
7.1	12.c	ARP-9(F2)	11845C/W on Term 52	Block Low SG Pressure to MFW Valves & Pumps	7.4	6.c	1845
7.1	14	ARP-10(F4)	Lead K1 1 F3 on CR12/1852 Term 5	Block AFW Pump Start on Trip of Both MFPs	7.4	8	1852
7.1	16.a(1)	MTC-1A SA Pnl-2	10293H-SA/O on Term 89	Alt Miniflow Computer Point	7.14	7.f	300
7.1	16.a(2)	MTC-1A SA Pnl-2	10293H-SA/G on Term 92	Alt Miniflow Computer Point	7.14	7.e	300
7.1	16.a(3)	MTC-1A SA Pnl-2	10293H-SA/U on Term 91	Alt Miniflow Computer Point	7.14	7.d	300
7.1	19	MTC-3B SB Pnl-3	Cable 10094B-SB/W, Field of Term 21	Block B Train SI	7.4	2	92
7.1	22.a	AR-1	Term 11 of TB-108	Block Low PRZ Level to PRZ Heaters & Ltdn Vlvs	7.14	9.a	171
7.1	22.b	AR-1	Term 7 of TB-112	Block Low PRZ Level to PRZ Heaters & Ltdwn Vlvs	7.14	9.b	171
7.1	32.a(1)	PIC-Cab 1	10993A-SR1/B on TBF-10	LT-474 Transmitter Lead	7.14	14.a(2)	993
7.1	32.b(1)	PIC-Cab 2	10993B-SR2/B on TBF-10	LT-475 Transmitter Lead	7.14	14.b(2)	993
7.1	32.c(1)	PIC-Cab 3	10994A-SR3/B on TBF-10	LT-476 Transmitter Lead	7.14	14.c(2)	994
7.1	33.a(1)	PIC-Cab 1	10993A-SR1/R on TBF-13	LT-484 Transmitter Lead	7.14	15.a(2)	993
7.1	33.b(1)	PIC-Cab 2	10993B-SR2/R on TBF-13	LT-485 Transmitter Lead	7.14	15.b(2)	993
7.1	33.c(1)	PIC-Cab 3	10994A-SR3/R on TBF-13	LT-486 Transmitter Lead	7.14	15.c(2)	994
7.1	34.a(1)	PIC-Cab 1	10993A-SR1/G on TBF-16	LT-494 Transmitter Lead	7.14	16.a(2)	993
7.1	34.b(1)	PIC-Cab 2	10993B-SR2/G on TBF-16	LT-495 Transmitter Lead	7.14	16.b(2)	993
7.1	34.c(1)	PIC-Cab 3	10994A-SR3/G on TBF-16	LT-496 Transmitter Lead	7.14	16.c(2)	994

Jumpers and Lifted Leads

TOC SWITCHES - TRAIN A SI

Installation Section	Step	Location	Function	Removal Section	Step	CWD
7.1	4.b-d	A-SA Breaker C CSIP	Enable Remote Bkr Operation	7.3	51.a(1-3)	223
7.1	5.b-d	A-SA Breaker C CCW	Enable Remote Bkr Operation	7.3	51.b(1-3)	943
7.1	6.b-d	B MFP	Enable Remote Bkr Operation	7.3	51.d(1-3)	1803
7.1	7.b-d	A MFP	Enable Remote Bkr Operation	7.3	51.c(1-3)	1801

EQUIPMENT VERIFICATION - TRAIN A & B SI

Installation Section	Step	Location	Lifted Lead	Function	Removal Section	Step	CWD
7.4	10	ARP-5 (R1)	11337N/W on TB-33	Blocks A Train SI to MFP and Turb Trip Logic	7.14	21	1337
7.10	10	SSP(A) Output 1	12008F-SB/W on TB604 Term 4	Blocks Primary SI Start to B EDG	7.14	6	1988

EQUIPMENT VERIFICATION - TRAIN A & B SI

Installation Section	Step	Location	Jumpers	Function	Removal Section	Step	CWD
7.4	7.a	ARP-2A(SA)R4	Term 4 to 3	Simulate RAB Normal Exhaust Fan Start	7.14	12.a	3177
7.4	7.b	ARP-2B(SB)R4	Term 92 to 91	Simulate RAB Normal Exhaust Fan Start	7.14	12.b	3177
7.10	11.a(2)	B-SB Bkr for 1C-SAB CSIP	Defeat TOC	Enable Remote Bkr Operation	7.14	5.a	224
7.10	11.b(2)	B-SB Bkr for 1C-SAB CCW Pump	Defeat TOC	Enable Remote Bkr Operation	7.14	5.b	943

EQUIPMENT VERIFICATION - PHASE A

Installation Section	Step	Location	Jumper	Function	Removal Section	Step	CWD
7.12	1	SSP(A) Output 1	Term 618-7 to 618-8	Block Phase A To 1IA-819	7.14	10	2458

Jumpers and Lifted Leads

SA and SB Pretest Verification

Installation

Section	Step	Location	Jumper	Function	Removal Section	Removal Step	CWD
7.10	11a.a	SSP(A) Output 1	Terminal 631-5 to 631-6	Block MFIS to 1FW-249	7.14	21a.a	802
7.10	11a.b	SSP(A) Output 1	Terminal 655-3 to 655-4	Block MFIS to 1FW-256	7.14	21a.b	805

AC 5/1

Lead Removal

Section	Step	Location	Lifted Leads	Function	Retermination Section	Retermination Step	CWD
7.10	11a.c	SSP(A) Output 1	11827C-SA/ W on 614-6	Block MFIS to 1FW-307	7.14	21a.c	1827
7.10	11a.d	SSP(A) Output 1	11830M-SA/ W on 627-10	Block MFIS to 1FW-159	7.14	21a.d	1830

Certifications and Reviews

This OST was performed as a: Periodic Surveillance Requirement: _____

Post Maintenance Operability Test: _____

Redundant Subsystem Test: _____

Plant Conditions: _____ Mode: _____

OST Performed By:

Initials	Name (Print)	Initials	Name (Print)

Certifications and Reviews

General Comments/Recommendations/Corrective Actions/Exceptions:

Pages Used: _____

OST Completed with NO EXCEPTIONS/EXCEPTIONS:

_____ Date: _____
Shift Supervisor - Nuclear

Reviewed By: _____ Date: _____
Manager - Shift Operations

Reviewed By: _____ Date: _____
ISI

Reviewed By: _____ Date: _____
Technical Support

OS2

CAROLINA POWER & LIGHT COMPANY

SHEARON HARRIS NUCLEAR POWER PLANT

PLANT OPERATING MANUAL

VOLUME 4

PART 7

PROCEDURE TYPE: Maintenance Surveillance Test

NUMBER: MST-I0080

TITLE: Reactor Coolant System Wide Range Pressure P-0402

REVISION 2

NOTE: This procedure has been screened in accordance with PLP-100 criteria and determined to be a Case III procedure. No additional management involvement is required.

EFFECTIVE APR 1 9 1991

AC 2/2

APPROVED: _____ 8/28/92
Signature Date

TITLE: MANAGER - MAINTENANCE

RECEIVED
APR 12 1991
HNP
DOCUMENT CONTROL

HNP CONTROLLED COPY # 016

Table of Contents

Section		Page
1.0	PURPOSE	4
2.0	REFERENCES	4
3.0	PREREQUISITES	4
4.0	PRECAUTIONS AND LIMITATIONS	6
5.0	SPECIAL TOOLS AND EQUIPMENT	8
6.0	ACCEPTANCE CRITERIA	8
7.0	PROCEDURE	9
7.1	Calibration of Pressure Transmitter PT-01RC-0402IW	11
7.2	Test Equipment Connections	17
7.3	AS FOUND Calibration Test	17
7.4	Calibration of Power Supply PQY-402	18
7.5	Calibration of NLP3 Isolator PY-402C	20
7.6	Calibration of NLP3 Isolator PY/402B	21
7.7	Calibration of Signal Comparator PS-01RC-0402W Ckt. 1	22
7.8	Calibration of Signal Comparator PS-01RC-0402W Ckt. 2	23
7.9	Calibration of NLP3 Isolator PY-402D	24
7.10	Calibration of NLP3 Isolator PY-402A	25
7.11	Calibration of Signal Comparator PS-01RC-0402AW Ckt. 1	26
7.12	Calibration of Signal Comparator PS-01RC-0402AW Ckt. 2	27
7.13	Calibration of Summing Amplifier PY-402	28
7.14	Calibration of Indicator PI-01RC-0402.1SAW	29
7.15	Calibration of Indicator PI-01RC-0402AW	29
7.16	Calibration of Recorder PR-01RC-0402SW Pen 1	30
7.17	Calibration Check of RVLIS (Thumbwheel Position 11)	31
7.18	Calibration Check of Computer Point PRC0402	31
7.19	Calibration of Indicator PI-01RC-0402.2SA	32
7.20	Annunciator Functional Test ALB-4,3-2	33
7.21	Annunciator Functional Test ALB-4,3-4	33
7.22	Restoration	34
7.23	Close Out	35
8.0	DIAGRAMS/ATTACHMENTS	36
	Figure 1 (Instrument Rack A1-R45A)	37
	Figure 2 (Test Assembly Connections)	38
	Figure 3 (MAGNEX Valve Handle Open)	39
	Figure 3A (MAGNEX Valve Handle Closed)	39
	Figure 4 (Vacuum Pump Valve Lineup)	40
	Figure 5 (Valve Lineup/Flow Path)	41
	Figure 6 (Transmitter Test Assembly)	42
	Figure 7 (Loop Drawing)	45
	Data Sheets 1 - 20	46
	Attachment 1 (Operator Prerequisite Summary Sheet)	66

List of Effective Pages

Page	Revision
1	AC 2/2
2	2
3	AC 2/1, AC 2/2
4 - 6	2
7	AC 2/1
8	2
9 - 11	AC 2/1
12 - 13	2
14	AC 2/1
15 - 32	2
33 - 34	AC 2/1
35 - 38	2
39	AC 2/1
40 - 47	2
48	AC 2/1
49 - 62	2
63 - 64	AC 2/1
65	2
66	AC 2/1

1.0 PURPOSE

1. This procedure provides instructions for the calibration check and calibration of Loop P-0402 and may be used for calibration, testing following calibration, periodic testing, or when an instrument malfunction is suspected.

2. This procedure is required to meet part of the Surveillance Requirements of Shearon Harris Technical Specifications 3/4.3.3.5.1 (Table 4.3-6;10) and 3/4.3.3.6 (Table 4.3-7;4, 11, and 21).

3. This procedure is required to meet part of the requirements of FSAR Commitments 3.11A-010 and 7.4.2-006.

2.0 REFERENCES

1. EBASCO Dwg.; 1364-002776 Sh. 26
   1364-046574 Sh. 22
   1364-046578 Sh. 7
   1364-092079 Sh. 11

2. NSSS System Equipment Reference Manual #PYC

3. ITT Barton Tech. Manual #ONY

4. Westinghouse Hagan Recorder Manual #PUK

5. 6-B-401 0139, 0197, 0325, 0326, 0622, 0911

6. SHNPP Scaling Document, Number SCN062

7. SHNPP Technical Specification 4.3.3.5, 4.3.3.6, 3.4.1.4, 3.5.2, 3.5.3, 3.9.8 and 4.5.2

8. FSAR Sections: 3.11A and 7.4.2.1.1

9. NRC Generic Letter 88-17; DIN #884050321, 884051584, and 891501161.

10. PCR-2898 Rev. 2

3.0 PREREQUISITES

1. Have Operations document whether or not the plant is in Midloop Operation by signing the YES or NO block on the Data Sheet.

3.0 PREREQUISITES (continued)

CAUTION

IF Operations signed off that the plant was is Midloop Operation, THEN DO NOT proceed with this procedure until the Shift Foreman has signed off that he has reviewed the OPERATOR PREREQUISITE SUMMARY SHEET and the Shift Foreman has granted permission to perform this procedure with the plant in Midloop Operation.

---

2. If the plant is in Midloop Operation, THEN perform the following:

   a. Have the Shift Foreman review the OPERATOR PREREQUISITE SUMMARY SHEET.

   b. Have the Shift Foreman sign off on the Data Sheet that he grants permission to perform this procedure with the plant in Midloop Operation.

   c. Proceed to Step 5.

3. IF the plant is not in Midloop Operation, THEN N/A the sign off space for Step 2 on the Data Sheet, and proceed to Step 4.

4. Obtain the Shift Foreman's permission to perform this test.

5. Contact RC prior to opening system.

6. Obtain RWP prior to entering a Radiation Control Area (RCA).

7. Detach and give to the Operator the OPERATOR PREREQUISITE SUMMARY SHEET; then have the Operator sign off on the Data Sheet.

8. Obtain from Operations the existing plant operating mode/condition and record on the Data Sheet.

9. Record on the Data Sheet the reason this procedure is being performed; i.e., master surveillance test schedule requirement, postmaintenance operability test, troubleshooting, etc.

3.0 PREREQUISITES (continued)

10. If the transmitter is to be calibrated, perform the following:

    a. Review Section 7.1 Calibration of Pressure Transmitter PT-01RC-0402IW.

    b. A transmitter test assembly shall be assembled and ready for use. Figure 6 provides a diagram illustrating how the test equipment should be assembled and a list of parts which can be used to build the test assembly.

    c. The pressure comparator, wet leg calibrator, and all tubes, hoses, and connectors MUST be drained of any liquid prior to system air evacuation with the exception of the Demin Water Reservoir and the deaerator.

    d. Use demineralized water only and fill the deaerator to about 3/4 full using the Demin Water Reservoir and vacuum pump to pull the water into the deaerator. Ensure that the vacuum pump isolation valve is closed when the vacuum pump is not operating, this will help prevent oil from being drawn into the deaerator.

    e. The wet leg calibrator, Water Reservoir, and deaerator should be at about the same elevation.

    f. The pressure comparator must be at an elevation lower than the top of the wet leg calibrator.

11. Technician must sign off Prerequisites Met on the Data Sheet.

4.0 PRECAUTIONS AND LIMITATIONS

1. This procedure effects equipment that is covered by the following Tech. Spec. L.C.O.s; 3.3.3.5, 3.3.3.6, 3.4.1.4, 3.5.2, 3.5.3, and 3.9.8.

2. The following alarms and indications may not indicate the actual field conditions during the test:

   Annunciators:

   a. ALB-4,3-2; 1RH-2 NOT SHUT AND RCS PRESS HIGH

   b. ALB-4,3-4; 1RH-40 NOT SHUT AND RCS PRESS HIGH

4.0 PRECAUTIONS AND LIMITATIONS (continued)

Indicators:

a. PI-01RC-0402.1SAW, MCB-1A2, RCS WIDE RANGE PRESSURE

b. PI-01RC-0402AW, MCB-1A2, RCS NARROW RANGE PRESSURE

c. PI-01RC-0402.2SA, ACP-II, RCS WIDE RANGE PRESSURE

Recorder:

a. PR-01RC-0402SW Pen 1, Recorder Panel, RCS WIDE RANGE PRESSURE

Computer:

a. RVLIS Model 86 Microprocessor, Cab. SA

b. PRC0402

c. PRC9455

d. TRC9402

3. Performance of this procedure will cause the LOSS of RCS Wide Range Pressure (P-0402) to the Subcooling Margin Monitor. AC 2/1

4. No testing shall be allowed in Channel P-0403 during the performance of this procedure.

5. The RHR interlock to prevent opening valves 1RH-2 and 1RH-40 until the RCS Wide Range Pressure is below 363 PSIG will be DEFEATED, when this loop is placed in TEST.

6. This procedure is written such that it can be performed in sequence or in part as required/determined by the Foreman or his designee. It is intended that this procedure will be performed in its entirety and in sequence. However, it may only be necessary to perform certain sections of the procedure; i.e., when it is used in conjunction with or following corrective maintenance, etc.

7. Transmitter PT-01RC-0402IW is Environmentally Qualified. Work on this equipment may have special requirements.

5.0 SPECIAL TOOLS AND EQUIPMENT

1. Ronan X-85 calibrator or equivalent (Transmitter Simulator and DVM)

2. Fluke 8600A digital multimeter or equivalent (DVM) (<±0.020 VDC) (3 required)

3. Extender board

4. Headsets (2 required)

5. The following will be required if the transmitter is to be calibrated:

   a. Mansfield & Green pressure comparator or suitable pressure source

   b. 4000 PSIG Digital Heise Model 710A or equivalent (<±15 PSIG)

   c. Omega 450 Digital Thermometer with contact probe or equivalent

   d. Ashcroft 0 to 30" Hg vacuum gauge or equivalent (<±0.5" Hg) (2 required)

   e. Heat Gun

   f. Extension cord with multistrip outlet

   g. Nold Deaerator

   h. Wet Leg Calibrator

   i. Magnex Valve Handle and Test Isolation Valve Handle

   j. 2 Oil Vacuum Pumps

   k. Snap-On TE100L Torque Wrench 100 ft/lbs (<±3 ft/lbs) or equivalent

   l. Zero and span O-rings (Part No. 724-653-62) or equivalent

   m. Cover O-ring (Part No. 724-653-70) or equivalent

   n. Silicone Grease (Part No. 725-925-04) or equivalent

6.0 ACCEPTANCE CRITERIA

1. The Reactor Coolant System Wide Range Pressure channel P-0402, with the exception of the computer point, shall provide AS LEFT signals within the Allowable Ranges as specified in the procedure and/or Data Sheets.

6.0 ACCEPTANCE CRITERIA (continued)

2. The I&C Foreman or his designee shall evaluate the data obtained and sign in the space provided on the Data Sheet.

7.0 PROCEDURE

1. This procedure must be followed directly at the job site, or communications must be established between the job site and an assistant referencing the procedure.

2. If any instrument cannot be calibrated:

   a. Notify Shift Foreman and I&C Foreman.

   b. Initiate a Work Request.

   c. Hang Deficiency Tag.

   d. Correct the problem via the Work Request.

   e. Note action taken in Comments Section of the Data Sheet.

   f. Proceed to the appropriate section/step of the procedure.

3. Record Date, Hour, and Minute that the MST was STARTED and initial on Data Sheet.

4. If the AS FOUND data for any Surveillance Requirement exceeds the Allowable Range or fails to respond as required, notify the Shift Foreman immediately and have the Shift Foreman sign off on the Data Sheet.

5. Perform the following:

   a. Have Operations take any necessary actions for the LOSS of the interlock which prevents opening valves 1RH-2 and 1RH-40 below 363 PSIG. AC 2/1

   b. Have Operations take any necessary actions for the RCS Wide Range Pressure (P-402) signal to the Subcooling Margin Monitor being INOPERABLE.

   c. Have Operations document on the Data Sheet.

6. Perform the following for Computer point PRC0402:

   a. At the computer terminal press the Cancel key until the console displays the MMEXEZ screen.

   b. Enter VAL.

7.0 PROCEDURE (continued)

c. Press the Return key.

d. At the computer terminal on the Current Value Display Template screen, enter the point I.D.

e. Press the Return key (wait momentarily for the display to update).

f. Press function key F2.

g. Determine the quality code for the point I.D.

h. If the quality code is DEL, SUB, or RDER, contact the computer technician for assistance before proceeding.

i. If the quality code is DALM N/A the initial space on the Data Sheet and proceed to Step p.

j. Enter DR.

k. Press the Return key.

l. Enter the point I.D.

m. Press the Return key.

n. Press function key F5, to remove the computer point from alarm processing.

o. Document on the Data Sheet that the computer point is removed from alarm processing.

p. Exit the VAL program by pressing the Cancel key until the console displays the MMEXEZ screen.

7. Place the following Bistable Trip Switches to the TEST position:

a. BS-1 (PS/402A1) at 0846 Cab. 01

b. BS-2 (PS/402A2) at 0846 Cab. 01

c. BS-1 (PS/402B1) at 0846 Cab. 17

AC 2/1

8. Verify the channel test status light at 0846 Cab. 17 is ON and document on the Data Sheet.

7.1 Calibration of Pressure Transmitter PT-01RC-0402IW

Located at RAB 236' I/Jz-37/39 Instrument Rack: A1-R45A

7.1.1 Remove Pressure Transmitter from Service

1. Perform the following:

   a. Obtain the RCS Wide Range Pressure from Operations and record the pressure on the Data Sheet.

   b. Refer to Figure 1 and record the AS FOUND hydraulic isolator indication for transmitter PT-01RC-0402IW in the Hydraulic Indicator block of the Data Sheet.

NOTE: The valve handle is magnetic and will be pulled forcefully into position when placed over the valve body. The valve should indicate in the open position as shown by Figure 3.

2. Attach MAGNEX operator handle to the MAGNEX isolation valve by aligning the handle as shown by Figure 3.

3. Turn the MAGNEX valve for PT-01RC-0402IW to the CLOSED position as shown by Figure 3A (approximately 90° rotation of valve handle).

4. Ensure the TEST ISOLATION VALVE for PT-01RC-0402IW is CLOSED (Refer to Figure 1).

5. Slowly open the vent valve for PT-01RC-0402IW.

6. Remove the protector cap from the quick disconnect.

CAUTION

Do NOT use Instrument Air, Service Air, Demineralized Water, or any other normally nonradioactive SYSTEM as a pressure source for this transmitter calibration as this could potentially contaminate the normally nonradioactive system.

---

7. Connect the test assembly as shown by Figure 2 and as described in steps 3.0.10.e and 3.0.10.f. AC 2/1

8. Allow as much water to drain from the vent as possible then close the vent valve.

7.1.1 Remove Pressure Transmitter from Service (continued)

NOTE: The "A" vacuum gauge should indicate greater than 29.5" Hg vacuum after operating approximately 10 minutes. The "B" vacuum gauge should indicate greater than 25" Hg vacuum if there is no leakage.

9. Perform the following to remove air and water from the test equipment and sensing line down to the TEST ISOLATION VALVE:

   a. Start both vacuum pumps.

   b. Perform valve lineups per Figure 4.

   c. Ensure that there is no air or water leakage into the test equipment.

10. Start the DEAERATOR.

11. Perform the following:

   a. Set the heat gun for low heat.

   b. Warm the stainless steel tubing from the high pressure hose down to the TEST ISOLATION VALVE for PT-01RC-0402IW. (Refer to Figures 1 and 2).

   c. Continue warming the tubing to evaporate any ice bubbles that may form due to low pressure boiling of the water in the tubing.

   d. Allow the tubing to cool.

12. Using a contact thermometer, verify that the steel tubing is near ambient air temperature but not cooler than ambient air temperature.

13. If the steel tubing is cooler than ambient air temperature, repeat Steps 11 and 12; otherwise proceed to Step 14.

14. Ensure the deaeration process is complete by observing that the deaerator bubbling action appears to have stopped (may require 30 minutes).

15. Close the isolation valve to the "B" vacuum pump and stop the "B" vacuum pump.

7.1.1 Remove Pressure Transmitter from Service (continued)

16. Open the H.P. ISOLATION VALVE.

17. Shut off the DEAERATOR motor.

18. Close both of the Vacuum gauge isolation valves.

19. Perform the following:

    a. Open the vent to atmosphere valve attached to the deaerator to force deaerated water through the tubing and hoses as shown on Figure 5.

    b. Allow 1 to 2 inches of water to accumulate in the wet leg tank.

    c. Close the H.P. ISOLATION VALVE.

20. Close the isolation valve to the "A" vacuum pump and stop the "A" vacuum pump.

21. Remove both Vacuum test gauges.

22. Close the pressure relief valve on the pressure comparator.

23. Using the wet leg vent valve perform the following:

    a. Vent the wet leg to atmosphere.

    b. Close the vent valve.

NOTE: When pressurizing the high pressure hose and transmitter access assembly to 3005 psi, the pressure should be obtained very rapidly with only one or two pumps of the pressure comparator handle. If pressure builds slowly, then this indicates that there is air in the pressurized line or that water is leaking out. If there is any indication that air bubbles are present in the high pressure line then the evacuation process should be repeated.

24. Pressurize the test assembly to 3005 psi to ensure there are no leaks, and that the system functions properly as per the above NOTE; if these conditions were met, proceed to Step 26.

7.1.1 Remove Pressure Transmitter from Service (continued)

25. If leaks are present or system does not function properly, perform the following:

    a. Drain the test equipment.

    b. Repeat Step 3.0.10.c through 3.0.10.f, and Steps 7.1.1.5 through 7.1.1.24.

AC 2/1

26. Adjust the pressure, using the pressure source relief valve, so that it is approximately equal to the RCS pressure.

27. Slowly open the Test Isolation valve.

28. While slowly decreasing the pressure, using the pressure source relief valve, monitor the Rx Hot Leg Hydraulic Isolator to ensure there is no leakage through the MAGNEX valve.

7.1.2 Transmitter Calibration

1. Place switch SW-3 at 0836 Cab. 17 to the TEST position.

2. Connect a DVM to TP1 at 0846 Cab. 17 to measure 1 to 5 VDC output.

3. If the AS FOUND data which will be taken in Step 7.1.2.4 exceeds the ALLOWABLE RANGE, notify the Shift Foreman immediately and the I&C Foreman as soon as possible.

4. Apply the required inputs to the transmitter and record the AS FOUND data on the Data Sheet.

5. If the AS FOUND data is within the Allowable Range and adjustment is not desired, perform the following:

    a. Record the AS FOUND data in the AS LEFT column on the Data Sheet.

    b. N/A the sign-offs for Steps 14 and 15 on the Data Sheet.

    c. Proceed to Step 17.

7.1.2 Transmitter Calibration (continued)

6. Apply an input pressure equal to 0% of span.

7. Adjust the transmitter ZERO adjustment to obtain the required value.

8. Apply an input pressure equal to 100% of span.

9. Adjust the SPAN adjustment to obtain the required value.

10. Repeat Steps 6 through 9 as necessary to obtain the required values.

11. Apply the required inputs and record the AS LEFT data on the Data Sheet.

12. Remove the old zero and span cover O-rings.

13. Apply silicone grease to the new O-rings.

14. Install the new zero and span cover O-rings and document on the Data Sheet.

15. If the transmitter cover was NOT removed, proceed to Step 16; otherwise, perform the following:

    a. Remove the old cover O-ring.

    b. Apply silicone grease to the new O-ring.

    c. Install the new cover O-ring and document on the Data Sheet.

    d. Torque the transmitter cover upon installation to 30 (27 to 33) ft/lbs and document on the Data Sheet.

    e. Proceed to Step 17.

16. N/A the sign-offs for Step 15.

17. Disconnect the DVM from TP1 at 0846 Cab. 17.

7.1.3 Return Pressure Transmitter to Service

NOTE: Steps 2.a, 2.b, 12 and 13 will require an Independent Verification in the Close Out Section. (The steps requiring Independent Verification are listed on the Close Out Data Sheet.)

1. Perform the following:

   a. Obtain the RCS Wide Range Pressure from Operations and record the value on the Data Sheet.

   b. Apply an input equal to the current Reactor Coolant System pressure.

2. Perform the following:

   a. Close Test Isolation Valve for PT-01RC-0402IW.

   b. Remove the handle (refer to Figure 1).

   c. Document on the Data Sheet.

3. Open MAGNEX valve for PT-01RC-0402IW by aligning the handle as shown by Figure 3 and document on the Data Sheet.

4. Second Technician verify the MAGNEX valve handle for PT-01RC-0402IW is in the open position as shown by Figure 3 and document on the Data Sheet.

5. Remove MAGNEX operator handle (do not adjust valve position).

6. Observe the hydraulic isolator indication for PT-01RC-0402IW.

7. IF the hydraulic isolator indication is within ± 0.1 $in.^3$ of the data recorded in Step 7.1.1.1.b and the indication appears to be correct for current plant conditions, THEN proceed to Step 9.

NOTE: MST-I0322 and a consultation with Technical Support may be useful to the foreman in determining the actions to be taken for the fluid volume adjustment.

8. Notify the I&C foreman of the abnormal hydraulic isolator indication and have the foreman direct any actions to change the indicated value.

9. Record the AS LEFT hydraulic isolator indication for PT-01RC-0402IW.

10. Relieve the pressure using the pressure source relief valve.

7.1.3 Return Pressure Transmitter to Service (continued)

11. Disconnect the test equipment at the quick disconnect.

12. Reinstall the protector cap on the quick disconnect and document on the Data Sheet.

13. Place SW-3 at 0836 Cab. 17 to the NORMAL position and document on the Data Sheet.

7.2 Test Equipment Connections

1. Connect a transmitter simulator to Test Jack PP/402 (+) and (-) at 0846 Cab. 17.

2. Connect a DVM to TP1 (+) and (-) at 0846 Cab. 17 to measure 1 to 5 VDC Input.

7.3 AS FOUND Calibration Test

1. If the AS FOUND reset value for PS-01RC-0402W Ckt. 1 or PS-01RC-0402AW Ckt. 1 is >1.544 VDC, inform Operations that an evaluation of the actual reset value should be made to ensure RHR interlock action is as specified by Tech. Spec. 4.5.2.d.1 is acceptable.

2. If the AS FOUND trip value for PS-01RC-0402W Ckt. 2 or PS-01RC-0402AW Ckt. 2 is >1.577 VDC, inform Operations that an evaluation of the actual trip value should be made to ensure RHR system pressure did not exceed the allowable system pressure with the valves open.

3. If the AS FOUND data for PI-01RC-0402.1SAW or PI-01RC-0402.2SA exceeds the ALLOWABLE RANGE, notify the Shift Foreman immediately and the I&C Foreman as soon as possible.

4. If the AS FOUND data for PRC0402 exceeds the ALLOWABLE RANGE, notify the Shift Foreman immediately that a computer point used for the calculation of Core Subcooling Margin has failed.

7.3 AS FOUND Calibration Test (continued)

5. Apply the required inputs and record the AS FOUND data on the Data Sheets for the following instruments:

	Tag No./Card	Location	Test Point
a.	PQY-402/NLP2	0533 Cab. 17	OUTPUT & SIG COM
b.	PQY-402/NLP2	0533 Cab. 17	ISOLATED & SIG COM
c.	PY-402C/NLP3	0534 Cab. 17	ISOLATED & SIG COM
d.	PY/402B/NLP3	0535 Cab. 17	ISOLATED & SIG COM
e.	PS-01RC-0402W/NAL2	0532 Cab. 17	OUTPUT LED Ckt. 1
f.	PS-01RC-0402W/NAL2	0532 Cab. 17	OUTPUT LED Ckt. 2
g.	PY-402D/NLP3	0533 Cab. 01	ISOLATED & SIG COM
h.	PY-402A/NLP3	0535 Cab. 01	ISOLATED & SIG COM
i.	PS-01RC-0402AW/NAL2	0534 Cab. 01	OUTPUT LED BS-1 at 0846 Cab. 01
j.	PS-01RC-0402AW/NAL2	0534 Cab. 01	OUTPUT LED Ckt. 2
k.	PY-402/NSA2	0244 Cab. 05	OUTPUT & SIG COM
l.	PI-01RC-0402.1SAW	MCB-1A2	VISUAL
m.	PI-01RC-0402AW	MCB-1A2	VISUAL
n.	PR-01RC-0402SW, Pen 1	Recorder Panel	VISUAL
o.	RVLIS Computer	Cab. ICC SA	VISUAL (Thumbwheel Position 11)
p.	PRC0402	MCR Computer	VISUAL
q.	PI-01RC-0402.2SA	ACP-II	VISUAL

7.4 Calibration of Power Supply PQY-402

Located at 0533 Cab. 17

1. If the AS FOUND data is within the Allowable Range and adjustment is not desired, perform the following:

   a. Record the AS FOUND data in the AS LEFT column of the Data Sheet.

   b. Proceed to the appropriate section.

7.4 Calibration of Power Supply POY-402 (continued)

2. Remove the NLP card at 0533 Cab. 17 and install an extender board in its place.

3. Insert the NLP card into the extender board.

4. If the data is not within the Allowable Range or adjustment is desired for the NONISOLATED OUTPUT, perform the following:

   a. Connect a DVM between OUTPUT and SIG COM.

   b. Adjust the input to 1.000 VDC.

   c. Adjust zero potentiometer M-135-1-J to obtain an output of 0.000 (-0.050 to 0.050) VDC.

   d. Adjust the input to 5.000 VDC.

   e. Adjust span potentiometer M-137-1-J to obtain an output of 10.000 (9.950 to 10.050) VDC.

   f. Repeat Steps b through e until the desired accuracy is obtained, then proceed to Step 5.

5. If the data is not within the Allowable Range or adjustment is desired for the ISOLATED OUTPUT, perform the following:

   a. Connect a DVM between the ISOLATED OUTPUT and SIG COM.

   b. Adjust the input to 1.000 VDC.

   c. Adjust zero potentiometer M-135-1-K to obtain an output of 0.000 (-0.050 to 0.050) VDC.

   d. Adjust the input to 5.000 VDC.

   e. Adjust span potentiometer M-137-1-K to obtain an output of 10.000 (9.950 to 10.050) VDC.

   f. Repeat Steps b through e until the desired accuracy is obtained.

6. Remove the extender board and reinstall the NLP card at 0533 Cab. 17.

7. Apply the required inputs and record the AS LEFT data on the Data Sheet.

8. Disconnect the DVMs connected to the OUTPUT and SIG COM and/or the ISOLATED and SIG COM.

7.5 Calibration of NLP3 Isolator PY-402C

Located at 0534 Cab. 17

1. If the AS FOUND data is within the Allowable Range and no upstream components were adjusted and adjustment is not desired, perform the following:

   a. Record the AS FOUND data in the AS LEFT column on the Data Sheet.

   b. Proceed to the appropriate section.

2. Connect a DVM to the ISOLATED output and SIG COM at 0534 Cab. 17.

3. Apply the required inputs and observe the outputs.

4. If the data is within the Allowable Range and adjustment is not desired, perform the following:

   a. Apply the required inputs and record the data in the AS LEFT column on the Data Sheet.

   b. Proceed to Step 14.

5. Remove the NLP card from 0534 Cab. 17 and install an extender board in its place.

6. Insert the NLP card into the extender board.

7. Adjust the input to 1.000 VDC.

8. Adjust ZERO potentiometer M-135-1-K to obtain an output of 0.000 (-0.050 to 0.050) VDC.

9. Adjust the input to 5.000 VDC.

10. Adjust SPAN potentiometer M-137-1-K to obtain an output of 10.000 (9.950 to 10.050) VDC.

11. Repeat Steps 7 through 10 until the desired values are obtained, then proceed to Step 12.

12. Remove the extender board and reinstall the NLP card at 0534 Cab. 17.

13. Apply the required inputs and record the AS LEFT data on the Data Sheet.

14. Disconnect the DVM from the output of the NLP card.

7.6 Calibration of NLP3 Isolator PY/402B

Located at 0535 Cab. 17

1. If the AS FOUND data is within the Allowable Range and no upstream components were adjusted and adjustment is not desired, perform the following:

   a. Record the AS FOUND data in the AS LEFT column on the Data Sheet.

   b. Proceed to the appropriate section.

2. Connect a DVM to the ISOLATED output and SIG COM at 0535 Cab. 17.

3. Apply the required inputs and observe the outputs.

4. If the data is within the Allowable Range and adjustment is not desired, perform the following:

   a. Apply the required inputs and record the data in the AS LEFT column on the Data Sheet.

   b. Proceed to Step 14.

5. Remove the NLP card from 0535 Cab. 17 and install an extender board in its place.

6. Insert the NLP card into the extender board.

7. Adjust the input to 1.000 VDC.

8. Adjust ZERO potentiometer M-135-1-K to obtain an output of 0.000 (-0.050 to 0.050) VDC.

9. Adjust the input to 5.000 VDC.

10. Adjust SPAN potentiometer M-137-1-K to obtain an output of 10.000 (9.950 to 10.050) VDC.

11. Repeat Steps 7 through 10 until the desired values are obtained, then proceed to Step 12.

12. Remove the extender board and reinstall the NLP card at 0535 Cab. 17.

13. Apply the required inputs and record the AS LEFT data on the Data Sheet.

14. Disconnect the DVM from the output of the NLP card.

7.7 Calibration of Signal Comparator PS-01RC-0402W Ckt. 1

Located at 0532 Cab. 17

1. If the AS FOUND data is within the Allowable Range and no upstream components were adjusted and adjustment is not desired, perform the following:

   a. Record the AS FOUND data in the AS LEFT column of the Data Sheet.

   b. Proceed to the appropriate section.

2. Apply the required inputs for the card and observe the output values.

3. If the data is within the Allowable Range and adjustment is not desired, perform the following:

   a. Apply the required inputs and record the data in the AS LEFT column on the Data Sheet.

   b. Proceed to the appropriate section.

4. Adjust the input to the required trip voltage.

5. Adjust the COARSE SET POINT and/or the FINE SET POINT potentiometer corresponding to the comparator circuit being calibrated until the comparator is reset.

6. Slowly adjust the FINE SET POINT potentiometer until the comparator trips.

7. Adjust the input to reset the comparator.

8. Slowly adjust the input to check the trip point.

9. Adjust the FINE SET POINT potentiometer as necessary.

10. Adjust the input to the required reset value.

11. Slowly adjust the DEADBAND potentiometer until the comparator resets.

12. Adjust the input to trip the comparator.

13. Slowly adjust the input to check the reset point.

14. Adjust the DEADBAND potentiometer as necessary.

15. Repeat the adjustments in Steps 4 through 14 until the required accuracy is met.

16. Apply the required inputs and record the AS LEFT data on the Data Sheet.

7.8 Calibration of Signal Comparator PS-01RC-0402W Ckt. 2

Located at 0532 Cab. 17

1. If the AS FOUND data is within the Allowable Range and no upstream components were adjusted and adjustment is not desired, perform the following:

   a. Record the AS FOUND data in the AS LEFT column of the Data Sheet.

   b. Proceed to the appropriate section.

2. Apply the required inputs for the card and observe the output values.

3. If the data is within the Allowable Range and adjustment is not desired, perform the following:

   a. Apply the required inputs and record the data in the AS LEFT column on the Data Sheet.

   b. Proceed to the appropriate section.

4. Adjust the input to the required trip voltage.

5. Adjust the COARSE SET POINT and/or the FINE SET POINT potentiometer corresponding to the comparator circuit being calibrated until the comparator is reset.

6. Slowly adjust the FINE SET POINT potentiometer until the comparator trips.

7. Adjust the input to reset the comparator.

8. Slowly adjust the input to check the trip point.

9. Adjust the FINE SET POINT potentiometer as necessary.

10. Adjust the input to the required reset value.

11. Slowly adjust the DEADBAND potentiometer until the comparator resets.

12. Adjust the input to trip the comparator.

13. Slowly adjust the input to check the reset point.

14. Adjust the DEADBAND potentiometer as necessary.

15. Repeat the adjustments in Steps 4 through 14 until the required accuracy is met.

16. Apply the required inputs and record the AS LEFT data on the Data Sheet.

7.9 Calibration of NLP3 Isolator PY-402D

Located at 0533 Cab. 01

1. If the AS FOUND data is within the Allowable Range and no upstream components were adjusted and adjustment is not desired, perform the following:

   a. Record the AS FOUND data in the AS LEFT column on the Data Sheet.

   b. Proceed to the appropriate section.

2. Connect a DVM to the ISOLATED output and SIG COM at 0533 Cab. 01.

3. Apply the required inputs and observe the outputs.

4. If the data is within the Allowable Range and adjustment is not desired, perform the following:

   a. Apply the required inputs and record the data in the AS LEFT column on the Data Sheet.

   b. Proceed to Step 14.

5. Remove the NLP card from 0533 Cab. 01 and install an extender board in its place.

6. Insert the NLP card into the extender board.

7. Adjust the input to 1.000 VDC.

8. Adjust ZERO potentiometer M-135-1-K to obtain an output of 0.000 (-0.050 to 0.050) VDC.

9. Adjust the input to 5.000 VDC.

10. Adjust SPAN potentiometer M-137-1-K to obtain an output of 10.000 (9.950 to 10.050) VDC.

11. Repeat Steps 7 through 10 until the desired values are obtained, then proceed to Step 12.

12. Remove the extender board and reinstall the NLP card at 0533 Cab. 01.

13. Apply the required inputs and record the AS LEFT data on the Data Sheet.

14. Disconnect the DVM from the output of the NLP card.

7.10 Calibration of NLP3 Isolator PY-402A

Located at 0535 Cab. 01

1. If the AS FOUND data is within the Allowable Range and no upstream components were adjusted and adjustment is not desired, perform the following:

   a. Record the AS FOUND data in the AS LEFT column on the Data Sheet.

   b. Proceed to the appropriate section.

2. Connect a DVM to the ISOLATED output and SIG COM at 0535 Cab. 01.

3. Apply the required inputs and observe the outputs.

4. If the data is within the Allowable Range and adjustment is not desired, perform the following:

   a. Apply the required inputs and record the data in the AS LEFT column on the Data Sheet.

   b. Proceed to Step 14.

5. Remove the NLP card from 0535 Cab. 01 and install an extender board in its place.

6. Insert the NLP card into the extender board.

7. Adjust the input to 1.000 VDC.

8. Adjust ZERO potentiometer M-135-1-K to obtain an output of 0.000 (-0.050 to 0.050) VDC.

9. Adjust the input to 5.000 VDC.

10. Adjust SPAN potentiometer M-137-1-K to obtain an output of 10.000 (9.950 to 10.050) VDC.

11. Repeat Steps 7 through 10 until the desired values are obtained, then proceed to Step 12.

12. Remove the extender board and reinstall the NLP card at 0535 Cab. 01.

13. Apply the required inputs and record the AS LEFT data on the Data Sheet.

14. Disconnect the DVM from the output of the NLP card.

7.11 Calibration of Signal Comparator PS-01RC-0402AW Ckt. 1

Located at 0534 Cab. 01

1. If the AS FOUND data is within the Allowable Range and no upstream components were adjusted and adjustment is not desired, perform the following:

   a. Record the AS FOUND data in the AS LEFT column of the Data Sheet.

   b. Proceed to the appropriate section.

2. Apply the required inputs for the card and observe the output values.

3. If the data is within the Allowable Range and adjustment is not desired, perform the following:

   a. Apply the required inputs and record the data in the AS LEFT column on the Data Sheet.

   b. Proceed to the appropriate section.

4. Adjust the input to the required trip voltage.

5. Adjust the COARSE SET POINT and/or the FINE SET POINT potentiometer corresponding to the comparator circuit being calibrated until the comparator is reset.

6. Slowly adjust the FINE SET POINT potentiometer until the comparator trips.

7. Adjust the input to reset the comparator.

8. Slowly adjust the input to check the trip point.

9. Adjust the FINE SET POINT potentiometer as necessary.

10. Adjust the input to the required reset value.

11. Slowly adjust the DEADBAND potentiometer until the comparator resets.

12. Adjust the input to trip the comparator.

13. Slowly adjust the input to check the reset point.

14. Adjust the DEADBAND potentiometer as necessary.

15. Repeat the adjustments in Steps 4 through 14 until the required accuracy is met.

16. Apply the required inputs and record the AS LEFT data on the Data Sheet.

7.12 Calibration of Signal Comparator PS-01RC-0402AW Ckt. 2

Located at 0534 Cab. 01

1. If the AS FOUND data is within the Allowable Range and no upstream components were adjusted and adjustment is not desired, perform the following:

   a. Record the AS FOUND data in the AS LEFT column of the Data Sheet.

   b. Proceed to the appropriate section.

2. Apply the required inputs for the card and observe the output values.

3. If the data is within the Allowable Range and adjustment is not desired, perform the following:

   a. Apply the required inputs and record the data in the AS LEFT column on the Data Sheet.

   b. Proceed to the appropriate section.

4. Adjust the input to the required trip voltage.

5. Adjust the COARSE SET POINT and/or the FINE SET POINT potentiometer corresponding to the comparator circuit being calibrated until the comparator is reset.

6. Slowly adjust the FINE SET POINT potentiometer until the comparator trips.

7. Adjust the input to reset the comparator.

8. Slowly adjust the input to check the trip point.

9. Adjust the FINE SET POINT potentiometer as necessary.

10. Adjust the input to the required reset value.

11. Slowly adjust the DEADBAND potentiometer until the comparator resets.

12. Adjust the input to trip the comparator.

13. Slowly adjust the input to check the reset point.

14. Adjust the DEADBAND potentiometer as necessary.

15. Repeat the adjustments in Steps 4 through 14 until the required accuracy is met.

16. Apply the required inputs and record the AS LEFT data on the Data Sheet.

7.13 Calibration of Summing Amplifier PY-402

Located at 0244 Cab. 05

1. If the AS FOUND data is within the Allowable Range and no upstream components were adjusted and adjustment is not desired, perform the following:

   a. Record the AS FOUND data in the AS LEFT column on the Data Sheet.

   b. Proceed to the appropriate section.

2. Connect a DVM to OUTPUT and SIG COM at 0244 Cab. 05.

3. Apply the required inputs and observe the output values.

4. If the data is within the Allowable Range and adjustment is not desired, perform the following:

   a. Apply the required inputs and record the data in the AS LEFT column on the Data Sheet.

   b. Proceed to Step 17.

5. Adjust the COARSE Low Limit potentiometer fully counterclockwise.

6. Adjust the COARSE High Limit potentiometer fully clockwise.

7. Adjust the input to 1.000 VDC.

8. Adjust the COARSE and/or FINE BIAS potentiometer to obtain an output of 0.000 (-0.050 to 0.050) VDC.

9. Adjust the input to 1.933 VDC.

10. Adjust the COARSE and/or FINE GAIN potentiometers to obtain an output of 9.996 (9.946 to 10.046) VDC.

11. Repeat Steps 7 through 10 until the required values are obtained.

12. Adjust the input to 0.980 VDC.

13. Adjust the COARSE and/or FINE LOW LIMIT potentiometers to obtain an output of 0.000 (-0.050 to 0.050) VDC.

14. Adjust the input to 1.953 VDC.

15. Adjust the COARSE and/or FINE HIGH LIMIT potentiometers to obtain an output of 9.996 (9.946 to 10.046) VDC.

16. Apply the required inputs and record the AS LEFT data on the Data Sheet.

17. Disconnect the DVM from OUTPUT and SIG COM.

7.14 Calibration of Indicator PI-01RC-0402.1SAW

Located at MCB-1A2

1. If the AS FOUND data is within the Allowable Range and no upstream components were adjusted and adjustment is not desired, perform the following:

   a. Record the AS FOUND data in the AS LEFT column on the Data Sheet.

   b. Proceed to the appropriate section.

2. Apply the required inputs and observe the output values.

3. If the data is within the Allowable Range and adjustment is not desired, perform the following:

   a. Apply the required inputs and record the data in the AS LEFT column on the Data Sheet.

   b. Proceed to the appropriate section.

4. Adjust the ZERO setscrew to minimize error.

5. Apply the required inputs and record the AS LEFT data on the Data Sheet.

7.15 Calibration of Indicator PI-01RC-0402AW

Located at MCB-1A2

1. If the AS FOUND data is within the Allowable Range and no upstream components were adjusted and adjustment is not desired, perform the following:

   a. Record the AS FOUND data in the AS LEFT column on the Data Sheet.

   b. Proceed to the appropriate section.

2. Apply the required inputs and observe the output values.

3. If the data is within the Allowable Range and adjustment is not desired, perform the following:

   a. Apply the required inputs and record the data in the AS LEFT column on the Data Sheet.

   b. Proceed to the appropriate section.

4. Adjust the ZERO setscrew to minimize error.

5. Apply the required inputs and record the AS LEFT data on the Data Sheet.

7.16 Calibration of Recorder PR-01RC-0402SW Pen 1

Located at Recorder Panel

1. If the AS FOUND data is within the Allowable Range and no upstream components were adjusted and adjustment is not desired, perform the following:

   a. Record the AS FOUND data in the AS LEFT column on the Data Sheet.

   b. Proceed to the appropriate section.

2. Apply the required inputs for the recorder and observe the output values.

3. If the data is within the Allowable Range and adjustment is not desired, perform the following:

   a. Apply the required inputs and record the data in the AS LEFT column on the Data Sheet.

   b. Proceed to the appropriate section.

4. Apply an input of 1.133 VDC.

NOTE: The trimpots are located on the lower front portion of the recorder.

5. Slide recorder chassis out of case to make ZERO adjustment.

6. Adjust the pen on the guide string until the pen reads 100 (40 to 160) PSIG.

7. Slide the recorder chassis into the case.

8. Apply an input signal of 4.867 VDC.

9. Adjust the SPAN trimpot until the pen reads 2900 (2840 to 2960) PSIG.

10. Repeat Steps 4 through 9 until the required accuracy is obtained, then proceed to Step 12.

11. If desired accuracy cannot be obtained, perform Section 7.0, Step 2.

12. Apply the required inputs and record the AS LEFT data on the Data Sheet.

7.17 Calibration Check of RVLIS (Thumbwheel Position 11)

Located in Cabinet ICC SA

1. If the AS FOUND data is within the Allowable Range and no upstream components were adjusted and adjustment is not desired, perform the following:

   a. Record the AS FOUND data in the AS LEFT column on the Data Sheet.

   b. Proceed to the appropriate section.

2. Apply the required inputs and observe the output values.

3. If the data is within the Allowable Range and adjustment is not desired, perform the following:

   a. Apply the required inputs and record the data in the AS LEFT column on the Data Sheet.

   b. Proceed to the appropriate section.

4. Initiate a Work Request, recording the following in the Nature of Trouble Block on the Work Request:

   a. Input voltages as read at Cabinet ICC SA terminal board 117 terminals 2 (+) and 3 (-).

   b. Desired computer display (from the Data Sheet).

   c. Actual computer display.

5. Reapply the required inputs and record the data in the AS LEFT column on the Data Sheet.

7.18 Calibration Check of Computer Point PRC0402

Located in the Main Control Room

1. If the AS FOUND data is within the Allowable Range and no upstream components were adjusted and adjustment is not desired, perform the following:

   a. Record the AS FOUND data in the AS LEFT column on the Data Sheet.

   b. Proceed to the appropriate section.

2. Apply the required inputs for Computer Point PRC0402 and observe the output values.

7.18 Calibration Check of Computer Point PRC0402 (continued)

3. If the data is within the Allowable Range and adjustment is not desired, perform the following:

   a. Apply the required inputs and record the data in the AS LEFT column on the Data Sheet.

   b. Proceed to the appropriate section.

4. If the data is not within the Allowable Range, notify the Shift Foreman that a computer point used in an Operational Surveillance Test has failed.

NOTE: This computer point is fed via a Data Link from the RVLIS computer. It is not processed through a MUX cabinet. Any adjustments in the output should be initiated in the RVLIS computer.

5. Initiate a Work Request to correct the problem, ensure that an appropriate priority for a Technical Specification parameter is used.

6. Reapply the required inputs and record the data in the AS LEFT column on the Data Sheet.

7.19 Calibration of Indicator PI-01RC-0402.2SA

Located at ACP-II

1. If the AS FOUND data is within the Allowable Range and no upstream components were adjusted and adjustment is not desired, perform the following:

   a. Record the AS FOUND data in the AS LEFT column on the Data Sheet.

   b. Proceed to the appropriate section.

2. Apply the required inputs and observe the output values.

3. If the data is within the Allowable Range and adjustment is not desired, perform the following:

   a. Apply the required inputs and record the data in the AS LEFT column on the Data Sheet.

   b. Proceed to the appropriate section.

4. Adjust the ZERO setscrew to minimize error.

5. Apply the required inputs and record the AS LEFT data on the Data Sheet.

7.20 Annunciator Functional Test ALB-4,3-2

1. Determine if valve 1RH-2 is open or closed.

2. If valve 1RH-2 is open perform the following:

   a. N/A the initials spaces for step 9 on the Data Sheets for Section 7.20 and 7.23.

   b. Proceed to Step 4.

3. Install at jumper at 480V MCC-1A21-SA COMPT-7B between terminals 18 and 29.

4. Adjust the input until the OUTPUT LED at 0534 Cab. 01 Ckt. 2 is ON (trip).

AC 2/1

NOTE: There is a time delay associated with this annunciator.

5. Verify that ALB-4,3-2; 1RH-2 NOT SHUT AND RCS PRESS HIGH is ON and document on the Data Sheet.

6. Adjust the input until the OUTPUT LED at 0534 Cab. 01 Ckt. 2 is OFF (reset).

7. Verify that ALB-4,3-2 is OFF and document on the Data Sheet.

8. If valve 1RH-2 was open, proceed to the appropriate section.

NOTE: Step 9 will require an Independent Verification in the Close Out Section. (The steps requiring Independent Verification are listed on the Close Out Data Sheet.)

9. Remove the jumper at 480V MCC-1A21-SA COMPT-7B between terminals 18 and 29 and document on the Data Sheet.

7.21 Annunciator Functional Test ALB-4,3-4

1. Determine if valve 1RH-40 is open or closed.

2. If valve 1RH-40 is open perform the following:

   a. N/A the initials spaces for step 9 on the Data Sheets for Section 7.21 and 7.23.

   b. Proceed to Step 4.

3. Install at jumper at 480V MCC-1A21-SA COMPT-8A between terminals 18 and 29.

4. Adjust the input until the OUTPUT LED at 0534 Cab. 01 Ckt. 2 is ON (trip).

AC 2/1

NOTE: There is a time delay associated with this annunciator.

5. Verify that ALB-4,3-4; 1RH-40 NOT SHUT AND RCS PRESS HIGH is ON and document on the Data Sheet.

7.21 Annunciator Functional Test ALB-4,3-4 (continued)

6. Adjust the input until the OUTPUT LED at 0534 Cab. 01 Ckt. 2 is OFF (reset).

7. Verify that ALB-4,3-4 is OFF and document on the Data Sheet.

8. If valve 1RH-40 was open, proceed to the appropriate section.

NOTE: Step 9 will require an Independent Verification in the Close Out Section. (The steps requiring Independent Verification are listed on the Close Out Data Sheet.)

9. Remove the jumper at 480V MCC-1A21-SA COMPT-8A between terminals 18 and 29 and document on the Data Sheet.

7.22 Restoration

NOTE: Steps 2, 3, and 6 will require an Independent Verification in the Close Out Section. (The steps requiring Independent Verification are listed on the Close Out Data Sheet.)

1. Disconnect the transmitter simulator from PP/402 test jack (+) and (-) at 0846 Cab. 17.

2. Place the following Channel Test Trip Switches to the NORMAL position and document on the Data Sheet:

   a. BS-1 at 0846 Cab. 17

   b. BS-1 at 0846 Cab. 01

   c. BS-2 at 0846 Cab. 01

AC 2/1

3. Verify the following Channel Test Status lights are OFF and document on the Data Sheet.

   a. 0846 Cab. 17

   b. 0846 Cab. 01

4. With a DVM, verify that the voltage at TP1 of 0846 Cab. 17 is indicative of current plant conditions and document on the Data Sheet.

5. If Computer point PRC0402 was removed from alarm processing in Section 7.0, proceed to Step 4.a.; otherwise, N/A the initial space on the Data Sheet.

   a. At the Computer Terminal, press the Cancel key until the console displays the MMEXEZ screen.

   b. Enter DR, then press the Return key.

7.22 Restoration (continued)

c. Enter the point I.D., then press the Return key.

d. Press function key F4 to restore the computer point to alarm processing.

e. Document on the Data Sheet that the computer point is restored to alarm processing.

f. Press the Cancel key until the console displays the MMEXEZ screen.

6. Disconnect all M&TE used in this loop calibration procedure and document on the Data Sheet.

7.23 Close Out

NOTE: Step 1 must be completed before continuing this procedure.

1. Second technician perform an Independent Verification of the steps specified on the Data Sheet (if they were performed) and document on the Data Sheet.

2. Ensure all alarms and indications listed in Section 4.0, Precautions, reflect current plant conditions.

3. Ensure that the ACCEPTANCE CRITERIA has been met then document on the Data Sheet.

4. Perform the following:

a. Notify Operations that valves 1RH-2 and 1RH-40 are no longer affected due to the performance of this procedure and may be positioned as desired.

b. Notify Operations that the loop has been returned to service.

c. Have the Operator document on the Data Sheet.

5. Enter the Date, Hour, Minute that the MST was completed and sign off on the Data Sheet.

6. Ensure that the Data Sheets have been completed.

8.0 DIAGRAMS/ATTACHMENTS

Figure 1 (Instrument Rack A1-R45A)

Figure 2 (Test Assembly Connections)

Figure 3 (MAGNEX Valve Handle Open)

Figure 3A (MAGNEX Valve Handle Closed)

Figure 4 (Vacuum Pump Valve Lineup)

Figure 5 (Valve Lineup/Flow Path)

Figure 6 (Transmitter Test Assembly)

Figure 7 (Loop Drawing)

Data Sheets 1 - 20

Attachment 1 (Operator Prerequisite Summary Sheet)

Figure 1
Instrument Rack A1-R45A

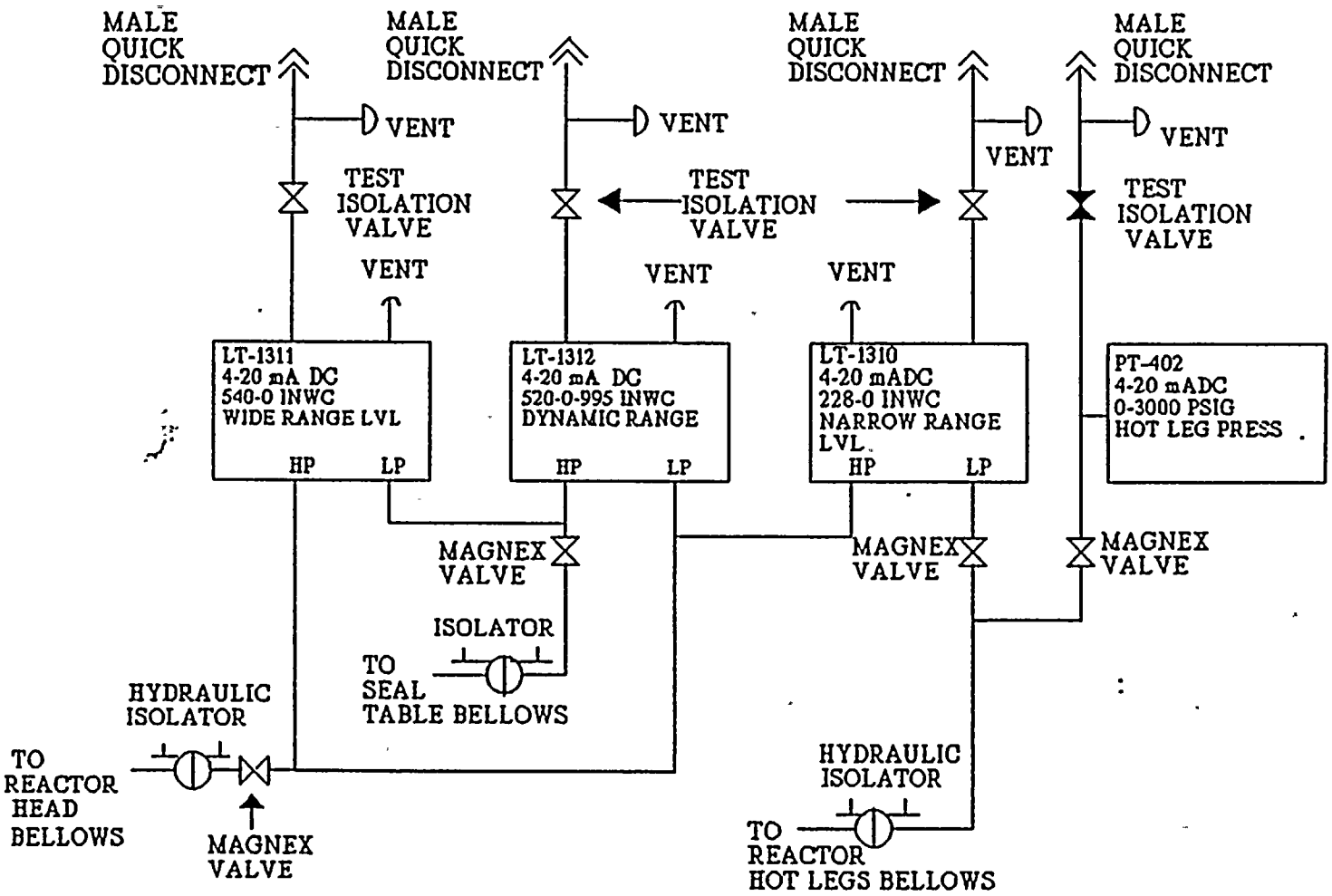

Figure 2
Test Assembly Connections

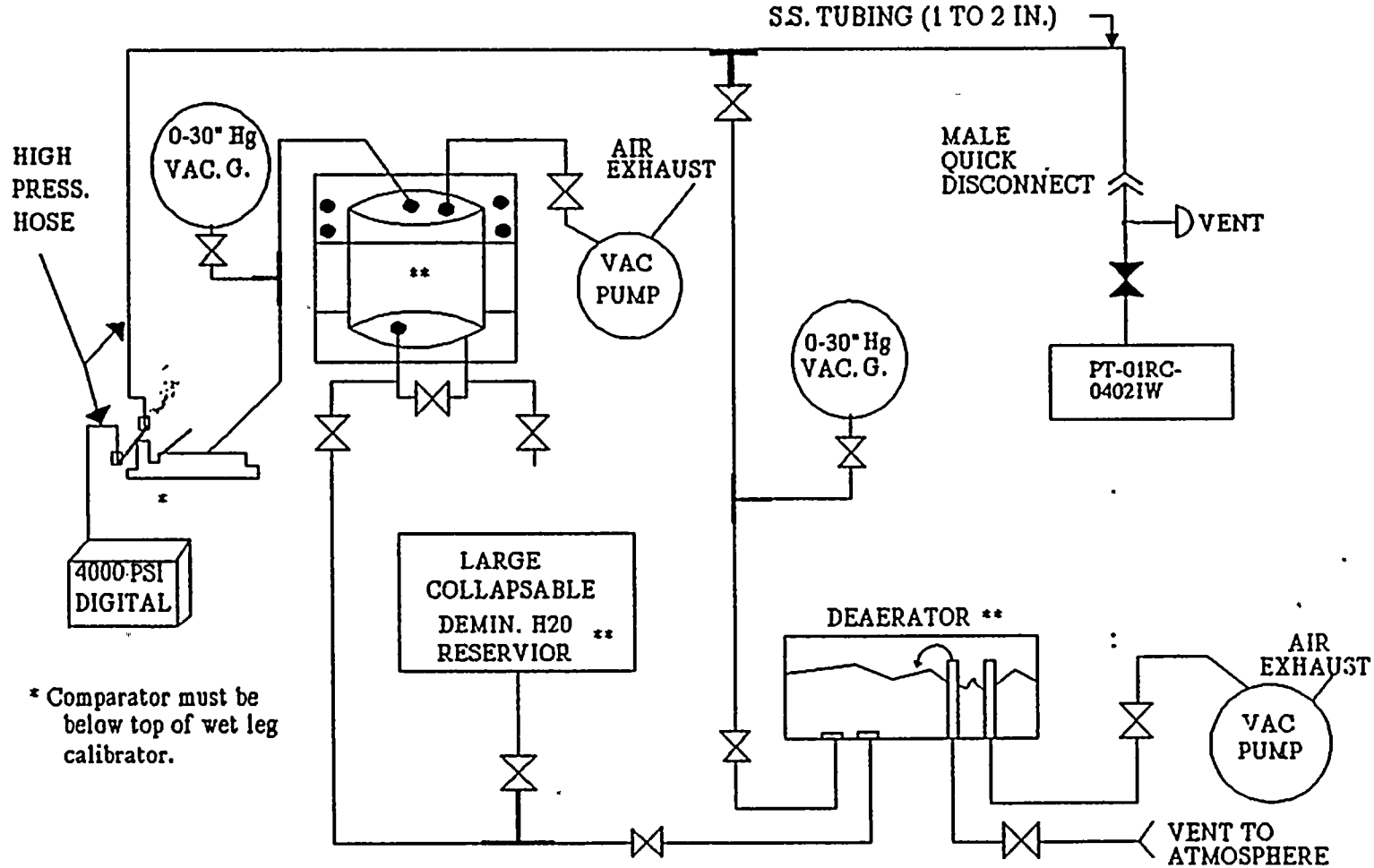

* Comparator must be below top of wet leg calibrator.

** Wet leg calibrator, Water reservoir, and Deaerator should be at same elevation

Figure 3
MAGNEX Valve Handle Open

VALVE IS IN THE
OPEN POSITION

Figure 3A
MAGNEX Valve Handle Closed

AC
2/1

VALVE IS IN THE
CLOSED POSITION

Figure 4
Vacuum Pump Valve Lineup

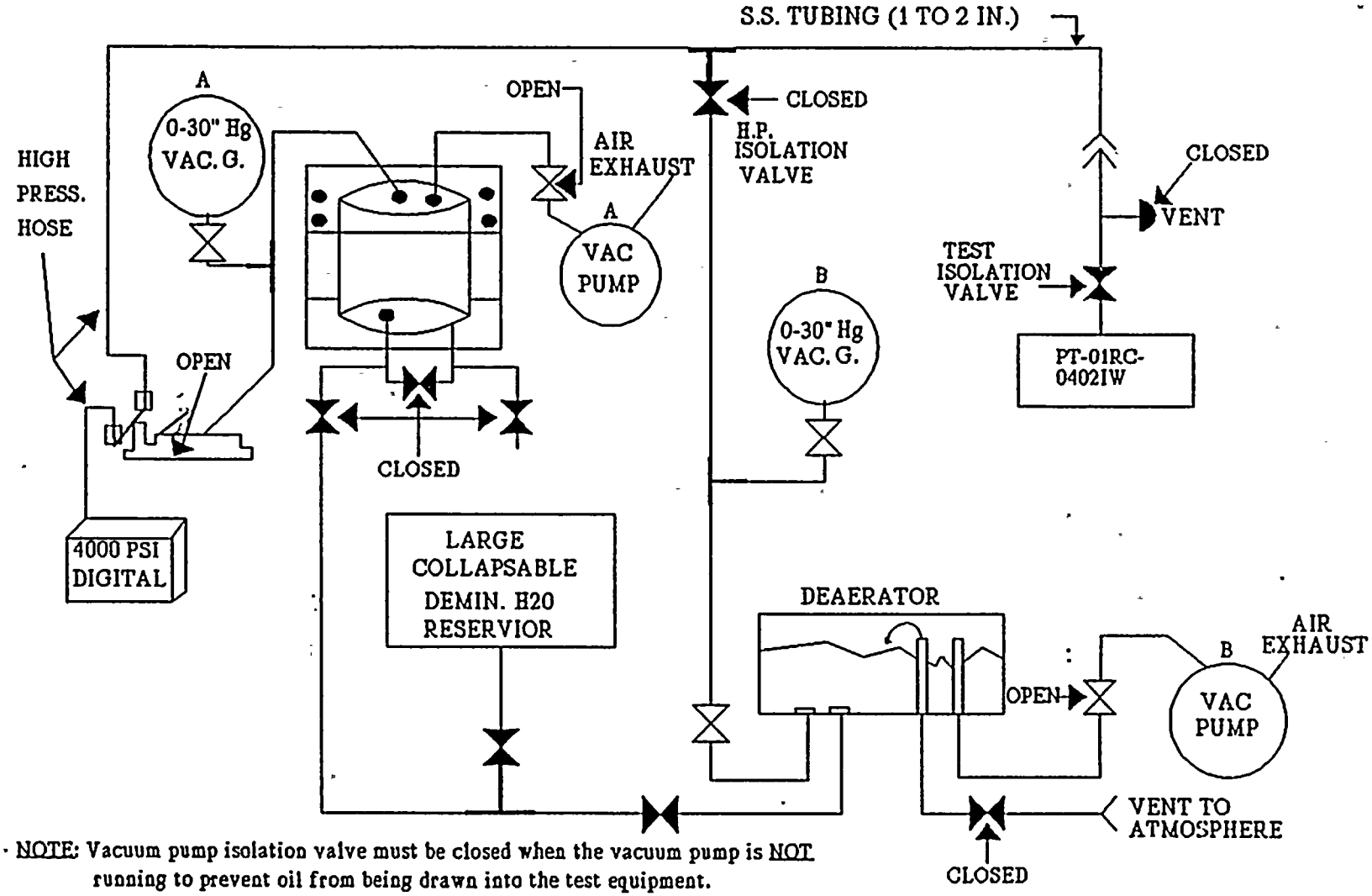

NOTE: Vacuum pump isolation valve must be closed when the vacuum pump is NOT running to prevent oil from being drawn into the test equipment.

Figure 5
Valve Lineup/Flow Path

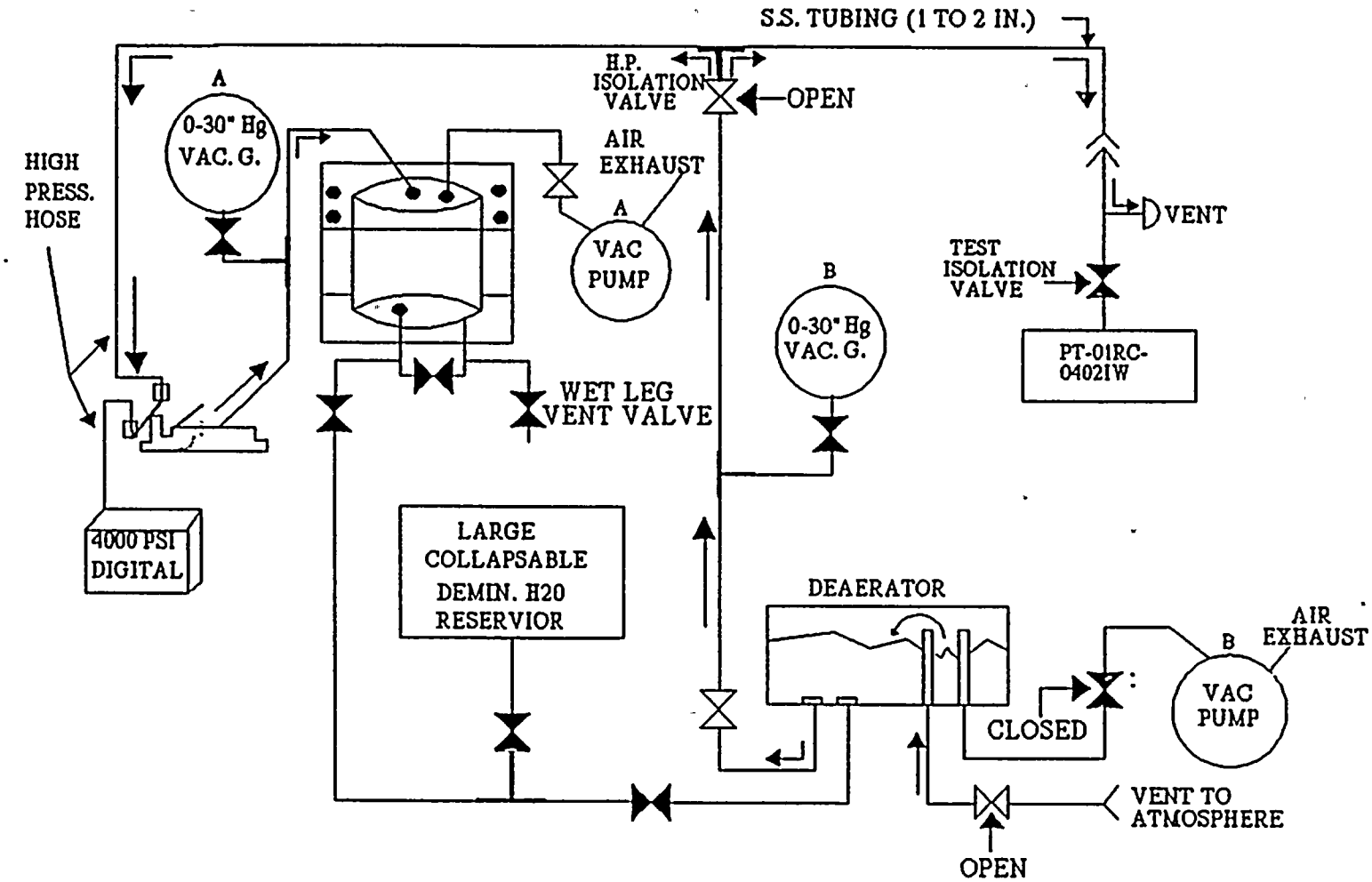

Figure 6
Transmitter Test Assembly

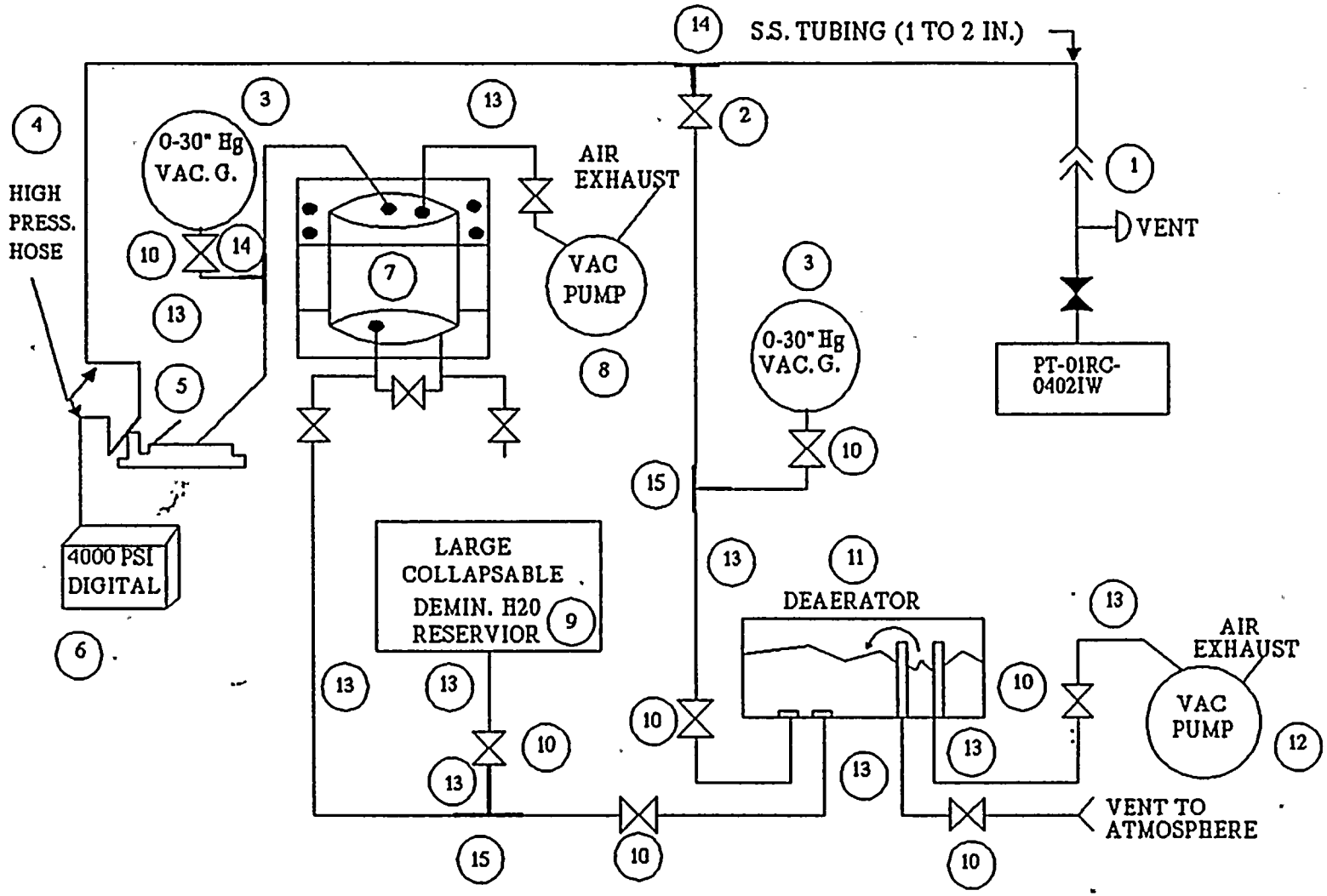

Figure 6 (continued)
Transmitter Test Assembly

ITEM NO.	DESCRIPTION	CP&L PART NO.	QNTY.
1 *	Quick Disconnect to 1/4" Tubing, Swagelok) S.S.	725-966-46	1
*	1/4" S.S. Tubing, 1 to 2 inches	728-972-83	1
2 *	Isolation Valve S.S., 1/4" Tubing (Rated > 4000 PSI)	725-879-59	1
*	1/4" S.S. Tubing, 1 to 2 inches	728-972-83	1
3 *	0 to 30" Hg VAC. Vacuum Gauge (± 0.5%)	N/A	2
*	Connector, 1/4" Pipe FNPT to 1/4" Tubing, S.S.	721-709-13	2
4 *	High Pressure Hose, 1/4" MNPT X 6' (Rated > 4000 PSI)	730-112-64	2
*	Connector, 1/4" Pipe FNPT to 1/4" Tubing, S.S.	721-709-13	1
5 *	Mansfield & Green pressure comparator (empty)	N/A	1
*	Vent Adaptor (special made using 1 vent plug with 1/8" hole drilled through the center and a 1/8" NPT nipple welded on the top)	N/A	1
*	Connector, 1/8" pipe MNPT to 1/4" Polyflow	708-475-04	1
6 *	4000 PSI Digital Heise Model 710A with cord (± 0.1%)	N/A	1
7 *	Standard Wet Leg Calibrator (empty) with inner chamber removed	N/A	1
8 *	Vacuum Pump (Oil)	N/A	1
9 *	2 Gallon collapsible jug, with hole in cap to fit 1/8" pipe and tapped to 1/8" NPT	General Issue	1
*	Connector, 1/8" pipe MNPT to 1/4" Polyflow	697-979-75	1
10 *	Isolation valve, 1/4" Tubing	731-428-12	7
*	Connector, 1/4" Pipe MNPT to 1/4" Polyflow	697-979-75	6

Figure 6 (continued)
Transmitter Test Assembly

ITEM NO.	DESCRIPTION	CP&L PART NO.	QNTY.
11 *	Nold Dearator	732-781-60	1
12 *	Vacuum Pump (Water only)	N/A	1
13 *	Polyflow Tubing, 1/4"	724-372-21	18'
14 *	Connector Tee, 1/4" S.S.	721-686-36	2
*	1/4" S.S. Tubing, 1 to 2"	728-972-83	2
15 *	Connector Tee, 1/4" Polyflow	714-755-52	3

Figure 7
Loop Drawing
2166-S-PRC0402

This page intentionally left blank.

Work Request No. _____

DATA SHEET

SYSTEM Reactor Coolant FUNCTION Wide Range Pressure

3.0 PREREQUISITES

NOTE: Technician will N/A the block in Step 1 that does not apply.

1. OPERATIONS SHALL SIGN IN THE BLOCK THAT IS CORRECT FOR PRESENT PLANT CONDITIONS:

YES the plant IS in MIDLOOP
_____/_____ OPERATIONS SIGNATURE DATE

OR

NO the plant IS NOT in MIDLOOP
_____/_____ OPERATIONS SIGNATURE DATE

NOTE: Step 2 will be N/A'd if the plant is NOT in Midloop Operation.

2. IF THE PLANT IS IN MIDLOOP OPERATION, THEN HAVE THE SHIFT FOREMAN SIGN FOR THE FOLLOWING:

   a. SHIFT FOREMAN HAS REVIEWED THE OPERATOR PREREQUISITE SUMMARY SHEET.

   b. SHIFT FOREMAN GRANTS PERMISSION TO PERFORM THE PROCEDURE WITH THE PLANT IN MIDLOOP OPERATION.

_____
SHIFT FOREMAN'S SIGNATURE

Work Request No. _____

DATA SHEET

3.0 PREREQUISITES (continued)

OPERATOR PREREQUISITE SUMMARY SHEET RECEIVED _____
OPERATOR SIGNATURE

PLANT OPERATING MODE/CONDITION _____

REASON PERFORMED _____

PREREQUISITES MET _____ _____
TECHNICIAN DATE

TEST EQUIPMENT USED

ITEM	TOOL ID	NEXT CALIBRATION DATE

7.0 PROCEDURE INITIALS

3. MST STARTED: _____/_____/_____ _____
DATE HOUR MINUTE

4. SHIFT FOREMAN NOTIFIED IF ANY AS FOUND SURVEILLANCE REQUIREMENTS FAILED

_____/_____/_____
SHIFT FOREMAN TIME DATE

Work Request No. _____

DATA SHEET

7.0 PROCEDURE (continued)

5. THE FOLLOWING CONDITIONS HAVE BEEN MET:

A. OPERATIONS HAS PERFORMED ANY NECESSARY ACTIONS REQUIRED FOR THE LOSS OF THE INTERLOCK WHICH PREVENTS OPENING VALVES 1RH-2 AND 1RH-40 BELOW 363 PSIG. AC 2/1

B. OPERATIONS HAS PERFORMED ANY NECESSARY ACTIONS FOR THE RCS WIDE RANGE PRESSURE (P-402) SIGNAL TO THE SUBCOOLING MARGIN MONITOR BEING INOPERABLE.

_____ / _____
Operations Date

6. THE FOLLOWING COMPUTER POINTS ARE REMOVED FROM ALARM PROCESSING:	INITIALS
a. PRC0402	_____
8. CHANNEL TEST STATUS LIGHT AT 0846 CAB. 17 IS ON	_____

AC 2/1

Work Request No. _____

DATA SHEET

7.1 Pressure Transmitter Calibration

TAG NO. PT-01RC-0402IW
MANUFACTURER ITT Barton
FUNCTION RCS Wide Range Pressure
SYSTEM NO. 2005
COMPONENT ID. EVM-PT-402
HEAD CORRECTION 4.8 PSIG

LOCATION RAB 236' I/Jz-37/39
INSTRUMENT RACK A1-R45A
MODEL NO. 753
Q CLASS A
SERIAL NO. _____
MST FREQUENCY R

INPUT PSIG	DESIRED OUTPUT VDC	ALLOWABLE RANGE VDC	AS FOUND VDC	AS LEFT VDC
5	1.000	0.980 to 1.020		
755	2.000	1.980 to 2.020		
1505	3.000	2.980 to 3.020		
2255	4.000	3.980 to 4.020		
3005	5.000	4.980 to 5.020		
2255	4.000	3.980 to 4.020		
1505	3.000	2.980 to 3.020		
755	2.000	1.980 to 2.020		
5	1.000	0.980 to 1.020		

NOTE: If the AS FOUND data for the Transmitter exceeds the ALLOWABLE RANGE, the Shift Foreman must be notified immediately and the I&C Foreman notified as soon as possible.

7.1.1.1 a. RCS WIDE RANGE PRESSURE _____ PSIG

b. AS FOUND HYDRAULIC INDICATOR IS _____ CUBIC INCHES

Work Request No. _____

DATA SHEET

7.1.2 Transmitter Calibration	INITIALS
14. ZERO AND SPAN O-RINGS REPLACED	_____
15.c COVER O-RING REPLACED	_____
15.d COVER TORQUED TO 30 (27 TO 33) FT/LBS	_____

7.1.3 Transmitter Restoration

1.a RCS WIDE RANGE PRESSURE _____ PSIG

2.a. TEST ISOLATION VALVE HAS BEEN CLOSED _____

2.b. HANDLE HAS BEEN REMOVED _____

3. MAGNEX ISOLATION VALVE IS OPEN _____

4. INDEPENDENT VERIFICATION:

7.1.3.3 MAGNEX ISOLATION VALVE IS OPEN _____

9. AS LEFT HYDRAULIC INDICATOR IS _____ cubic inches.

12. PROTECTOR CAP HAS BEEN REINSTALLED _____

13. NMT SWITCH 3 AT 0836 CAB. 17 TO NORMAL _____

DATA SHEET

7.4 Power Supply Calibration

TAG NO. PQY-402 [1PIC-17-0533] LOCATION Slot 0533 Cab. 17
MANUFACTURER WECO MODEL NO. 2837A12G02
FUNCTION Loop Power Supply Q CLASS A
SYSTEM NO. 2005 [1900] SERIAL NO. _____
COMPONENT ID TSB-PQY-402 [JRK-17-0533] MST FREQUENCY R

INPUT VDC	DESIRED OUTPUT VDC	ALLOWABLE RANGE VDC	NONISOL. OUTPUT		ISOL. OUTPUT	
			AS FOUND VDC	AS LEFT VDC	AS FOUND VDC	AS LEFT VDC
1.000	0.000	-0.050 to 0.050				
2.000	2.500	2.450 to 2.550				
3.000	5.000	4.950 to 5.050				
4.000	7.500	7.450 to 7.550				
5.000	10.000	9.950 to 10.050				

DATA SHEET

7.5 Isolator Calibration

TAG NO. PY-402C [1PIC-17-0534] LOCATION Slot 0534 Cab. 17
MANUFACTURER WECO MODEL NO. 2837A12G03
FUNCTION Signal Isolation Q CLASS A
SYSTEM NO. 2005 [1900] SERIAL NO. _____
COMPONENT ID NWY-PY-402C [JSQ-17-0534] MST FREQUENCY R

INPUT VDC	DESIRED OUTPUT VDC	ALLOWABLE RANGE VDC	AS FOUND VDC	AS LEFT VDC
1.000	0.000	-0.050 to 0.050		
2.000	2.500	2.450 to 2.550		
3.000	5.000	4.950 to 5.050		
4.000	7.500	7.450 to 7.550		
5.000	10.000	9.950 to 10.050		

7.6 Isolator Calibration

TAG NO. PY/402B [1PIC-17-0535] LOCATION Slot 0535 Cab. 17
MANUFACTURER WECO MODEL NO. 2837A12G03
FUNCTION Signal Isolation Q CLASS A
SYSTEM NO. 2005 [1900] SERIAL NO. _____
COMPONENT ID NWY-PY/402B [JSQ-17-0535] MST FREQUENCY R

INPUT VDC	DESIRED OUTPUT VDC	ALLOWABLE RANGE VDC	AS FOUND VDC	AS LEFT VDC
1.000	0.000	-0.050 to 0.050		
2.000	2.500	2.450 to 2.550		
3.000	5.000	4.950 to 5.050		
4.000	7.500	7.450 to 7.550		
5.000	10.000	9.950 to 10.050		

Work Request No. _____

DATA SHEET

7.7 Signal Comparator Calibration

CIRCUIT 1

TAG NO. PS-01RC-0402W [1PIC-17-0532] LOCATION Slot 0532 Cab. 17
MANUFACTURER WECO MODEL NO. 2837A13G02
FUNCTION OPEN PERMISSIVE THRU ACP Q CLASS A
SYSTEM NO. 2005 [1900] SERIAL NO. ..
COMPONENT ID. EVQ-PS-402W [JQO-17-0532] MST FREQUENCY R

COMPARATOR ACTION	SET POINT PSIG	DESIRED INPUT VDC	ALLOWABLE RANGE VDC	AS FOUND VDC	AS LEFT VDC
Trip: OUTPUT LED "ON" ON DECR VDC	363	1.484	1.464 to 1.504		
Reset: OUTPUT LED "OFF" ON INCR VDC	393	1.524	1.504 to 1.544		

NOTE: If the AS FOUND reset value is > 1.544 VDC, inform Operations that an evaluation of the actual reset value should be made to ensure RHR interlock action is as specified by Tech. Spec. 4.5.2.d.1 is acceptable.

DATA SHEET

7.8 Signal Comparator Calibration

CIRCUIT 2

TAG NO. PS-01RC-0402W [1PIC-17-0532] LOCATION Slot 0532 Cab. 17
MANUFACTURER WECO MODEL NO. 2837A13G02
FUNCTION ANNUN. INTERLOCKED TO (ACP) Q CLASS A
SYSTEM NO. 2005 [1900] SERIAL NO. ..
COMPONENT ID. EVQ-PS-402W [JQO-17-0532] MST FREQUENCY R

COMPARATOR ACTION	SET POINT PSIG	DESIRED INPUT VDC	ALLOWABLE RANGE VDC	AS FOUND VDC	AS LEFT VDC
Trip: OUTPUT LED "ON" ON INCR VDC	425	1.567	1.557 to 1.577		
Reset: OUTPUT LED "OFF" ON DECR VDC	410	1.547	1.537 to 1.557		

NOTE: If the "AS FOUND" trip value is > 1.577 VDC, inform Operations that an evaluation of the actual trip value should be made to ensure RHR system did not exceed the allowable system pressure with the valves open.

7.9 Isolator Calibration

TAG NO. PY-402D [1PIC-01-0533] LOCATION Slot 0533 Cab. 01
MANUFACTURER WECO MODEL NO. 2837A12G03
FUNCTION Signal Isolation Q CLASS A
SYSTEM NO. 2005 [1900] SERIAL NO. _____
COMPONENT ID NWY-PY-402D [JSQ-01-0533] MST FREQUENCY R

INPUT VDC	DESIRED OUTPUT VDC	ALLOWABLE RANGE VDC	AS FOUND VDC	AS LEFT VDC
1.000	0.000	-0.050 to 0.050		
2.000	2.500	2.450 to 2.550		
3.000	5.000	4.950 to 5.050		
4.000	7.500	7.450 to 7.550		
5.000	10.000	9.950 to 10.050		

DATA SHEET

7.10 Isolator Calibration

TAG NO. PY-402A [1PIC-01-0535] LOCATION Slot 0535 Cab. 01
MANUFACTURER WECO MODEL NO. 2837A12G03
FUNCTION Signal Isolation Q CLASS A
SYSTEM NO. 2005 [1900] SERIAL NO. _____
COMPONENT ID NWY-PY-402A [JSO-01-0535] MST FREQUENCY NO. R

INPUT VDC	DESIRED OUTPUT VDC	ALLOWABLE RANGE VDC	AS FOUND VDC	AS LEFT VDC
1.000	0.000	-0.050 to 0.050		
2.000	2.500	2.450 to 2.550		
3.000	5.000	4.950 to 5.050		
4.000	7.500	7.450 to 7.550		
5.000	10.000	9.950 to 10.050		

7.11 Signal Comparator Calibration

CIRCUIT 1

TAG NO. PS-01RC-0402AW [1PIC-01-0534] LOCATION Slot 0534 Cab. 01
MANUFACTURER WECO MODEL NO. 2837A13G02
FUNCTION OPEN PERMISSIVE Q CLASS A
SYSTEM NO. 2005 [1900] SERIAL NO. _____
COMPONENT ID EVQ-PS-402A [JQO-01-0534] MST FREQUENCY R

COMPARATOR ACTION	SET POINT PSIG	DESIRED INPUT VDC	ALLOWABLE RANGE VDC	AS FOUND VDC	AS LEFT VDC
Trip: OUTPUT LED "OFF" ON DECR VDC	363	1.484	1.464 to 1.504		
Reset: OUTPUT LED "ON" ON INCR VDC	393	1.524	1.504 to 1.544		

NOTE: If the "AS FOUND" reset value is >1.544 VDC, inform Operations that an evaluation of the actual reset value should be made to ensure RHR interlock action is as specified by Tech. Spec. 4.5.2.d.1 is acceptable.

DATA SHEET

7.12 Signal Comparator Calibration

CIRCUIT 2

TAG NO. PS-01RC-0402AW [1PIC-01-0534] LOCATION Slot 0534 Cab. 01
MANUFACTURER WECO MODEL NO. 2837A13G02
FUNCTION ANNUN. INTERLOCKED W/ VALVE Q CLASS A
SYSTEM NO. 2005 [1900] SERIAL NO. ..
COMPONENT ID EVQ-PS-402A [JQO-01-0534] MST FREQUENCY R

COMPARATOR ACTION	SET POINT PSIG	DESIRED INPUT VDC	ALLOWABLE RANGE VDC	AS FOUND VDC	AS LEFT VDC
Trip: OUTPUT LED "ON" ON INCR VDC	425	1.567	1.557 to 1.577		
Reset: OUTPUT LED "OFF" ON DECR VDC	410	1.547	1.537 to 1.557		

NOTE: If the "AS FOUND" trip value is >1.577 VDC, inform Operations that an evaluation of the actual trip values should be made to ensure RHR system did not exceed the allowable system pressure with the valves open.

Work Request No. _____

DATA SHEET

7.13 Summing Amplifier Calibration

TAG NO. PY-402 [1PIC-05-0244] LOCATION Slot 0244 Cab. 05
MANUFACTURER WECO MODEL NO. 2837A14G02
FUNCTION Signal Converter Q CLASS E
SYSTEM NO. 2005 [1900] SERIAL NO. _____
COMPONENT ID NWY-PY-402 [JTI-05-0244] MST FREQUENCY NO. R

INPUT VDC	DESIRED OUTPUT VDC	ALLOWABLE RANGE VDC	AS FOUND VDC	AS LEFT VDC
1.000	0.000	-0.050 to 0.050		
1.240	2.571	2.521 to 2.621		
1.467	5.004	4.954 to 5.054		
1.693	7.425	7.375 to 7.475		
1.933	9.996	9.946 to 10.046		

Work Request No. _____

DATA SHEET

7.14 Indicator Calibration

TAG NO. PI-01RC-0402,1SAW
LOCATION MCB-1A2
MANUFACTURER WECO
MODEL NO. VX-252
FUNCTION Indication
Q CLASS A
SYSTEM NO. 2005
SERIAL NO. NONE
COMPONENT ID EVO-PI-402,1
MST FREQUENCY R

INPUT VDC	DESIRED OUTPUT PSIG	ALLOWABLE RANGE PSIG	AS FOUND PSIG	AS LEFT PSIG
1.000	0	-60 to 60		
2.000	750	690 to 810		
3.000	1500	1440 to 1560		
4.000	2250	2190 to 2310		
5.000	3000	2940 to 3060		
4.000	2250	2190 to 2310		
3.000	1500	1440 to 1560		
2.000	750	690 to 810		
1.000	0	-60 to 60		

NOTE: If the AS FOUND data for the Indicator exceeds the ALLOWABLE RANGE, the Shift Foreman must be notified immediately and the I&C Foreman notified as soon as possible.

Work Request No. _____

DATA SHEET

7.15 Indicator Calibration

TAG NO. PI-01RC-0402AW
LOCATION MCB-1A2
MANUFACTURER WECO
MODEL NO. VX-252
FUNCTION Indication (Narrow Range)
Q CLASS B
SYSTEM NO. 2005
SERIAL NO. NONE
COMPONENT ID EVO-PI-402A
MST FREQUENCY R

INPUT VDC	DESIRED OUTPUT PSIG	ALLOWABLE RANGE PSIG	AS FOUND PSIG	AS LEFT PSIG
1.000	0	-14 to 14		
1.240	180	166 to 194		
1.467	350	336 to 364		
1.693	520	506 to 534		
1.933	700	686 to 714		
1.693	520	506 to 534		
1.467	350	336 to 364		
1.240	180	166 to 194		
1.000	0	-14 to 14		

DATA SHEET

7.16 Recorder Calibration

TAG NO. PR-01RC-0402SW Pen 1
MANUFACTURER HAGAN
SYSTEM NO. 2005
COMPONENT ID EVN-PR-402

LOCATION Recorder Panel
MODEL NO. 17450
Q CLASS B
SERIAL NO. _____
MST FREQUENCY R

INPUT VDC	DESIRED OUTPUT PSIG	ALLOWABLE RANGE PSIG	AS FOUND PSIG	AS LEFT PSIG
1.000	0	-60 to 60		
2.000	750	690 to 810		
3.000	1500	1440 to 1560		
4.000	2250	2190 to 2310		
5.000	3000	2940 to 3060		
4.000	2250	2190 to 2310		
3.000	1500	1440 to 1560		
2.000	750	690 to 810		
1.000	0	-60 to 60		

7.17 Calibration Check of RVLIS (Thumbwheel Position 11)

INPUT VDC	DESIRED OUTPUT PSIA	ALLOWABLE RANGE PSIA	AS FOUND PSIA	AS LEFT PSIA
1.000	14.7	-7.8 to 37.2		
2.000	764.7	742.2 to 787.2		
3.000	1514.7	1492.2 to 1537.2		
4.000	2264.7	2242.2 to 2287.2		
5.000	3014.7	2992.2 to 3037.2		

DATA SHEET

7.18 Calibration Check of Computer Point

POINT NO. PRC0402

INPUT VDC	DESIRED OUTPUT PSIA	ALLOWABLE RANGE PSIA	AS FOUND PSIA	AS LEFT PSIA
1.000	14.7	-7.8 to 37.2		
2.000	764.7	742.2 to 787.2		
3.000	1514.7	1492.2 to 1537.2		
4.000	2264.7	2242.2 to 2287.2		
5.000	3014.7	2992.2 to 3037.2		

NOTE: If the AS FOUND data for PRC0402 exceeds the ALLOWABLE RANGE, notify the Shift Foreman that a computer point used for the calculation of Core Subcooling Margin has failed.

Work Request No. _____

DATA SHEET

7.19 Indicator Calibration

TAG NO. PI-01RC-0402.2SA
MANUFACTURER WECO
FUNCTION Indication
SYSTEM NO. 2005
COMPONENT ID EVO-PI-402.2

LOCATION ACP-II
MODEL NO. VX-252
Q CLASS A
SERIAL NO. NONE
MST FREQUENCY R

INPUT VDC	DESIRED OUTPUT PSIG	ALLOWABLE RANGE PSIG	AS FOUND PSIG	AS LEFT PSIG
1.000	0	-60 to 60		
2.000	750	690 to 810		
3.000	1500	1440 to 1560		
4.000	2250	2190 to 2310		
5.000	3000	2940 to 3060		
4.000	2250	2190 to 2310		
3.000	1500	1440 to 1560		
2.000	750	690 to 810		
1.000	0	-60 to 60		

NOTE: If the AS FOUND data for the Indicator exceeds the ALLOWABLE RANGE, the Shift Foreman must be notified immediately and the I&C Foreman notified as soon as possible.

7.20 Annunciator Functional Test ALB-4,3-2 — INITIALS

5. ALB-4,3-2; 1RH-2 NOT SHUT AND RCS PRESS HIGH is ON _____

7. ALB-4,3-2; 1RH-2 NOT SHUT AND RCS PRESS HIGH is OFF _____

9. Jumper removed at 480V MCC-1A21-SA COMPT-7B between terminals 18 and 29 _____

7.21 Annunciator Functional Test ALB-4,3-4

5. ALB-4,3-4; 1RH-40 NOT SHUT AND RCS PRESS HIGH is ON _____

7. ALB-4,3-4; 1RH-40 NOT SHUT AND RCS PRESS HIGH is OFF _____

9. Jumper removed at 480V MCC-1A21-SA COMPT-8A between terminals 18 and 29 _____

Work Request No. _____

DATA SHEET

7.22 Restoration — INITIALS

2. THE FOLLOWING CHANNEL TEST TRIP SWITCHES HAVE BEEN PLACED TO NORMAL:

   a. BS-1 AT 0846 CAB. 17 _____

   b. BS-1 AT 0846 CAB. 01 _____

   c. BS-2 AT 0846 CAB. 01 _____ AC 2/1

3. THE FOLLOWING CHANNEL TEST STATUS LIGHTS ARE OFF

   a. 0846 CAB. 17 _____

   b. 0846 CAB. 01 _____

4. VOLTAGE AT TP1 IS INDICATIVE OF CURRENT PLANT CONDITIONS _____

5. THE FOLLOWING COMPUTER POINT IS RESTORED TO ALARM PROCESSING:

   a. PRC0402 _____

6. ALL M&TE HAS BEEN DISCONNECTED _____

7.23 Close Out

1. INDEPENDENT VERIFICATION:

   7.1.3.2.a TEST ISOLATION VALVE HAS BEEN CLOSED _____

   7.1.3.2.b HANDLE HAS BEEN REMOVED _____

   7.1.3.12 PROTECTOR CAP HAS BEEN REINSTALLED _____

   7.1.3.13 NMT SWITCH 3 AT 0836 CAB. 17 HAS BEEN PLACED TO NORMAL _____

   7.20.9 JUMPER REMOVED AT 480V MCC-1A21-SA COMPT-7B BETWEEN TERMINALS 18 AND 29 _____

   7.21.9 JUMPER REMOVED AT 480V MCC-1A21-SA COMPT-8A BETWEEN TERMINALS 18 AND 29 _____

Work Request No. _____

DATA SHEET

7.23 Close Out (continued) INITIALS

1. INDEPENDENT VERIFICATION: (continued)

7.22.2 THE FOLLOWING SWITCHES HAVE BEEN PLACED TO NORMAL:

a. BS-1 AT 0846 CAB. 17 _____

b. BS-1 AT 0846 CAB. 01 _____

c. BS-2 AT 0846 CAB. 01 _____ AC 2/1

7.22.3 THE FOLLOWING CHANNEL TEST STATUS LIGHTS ARE OFF

a. 0846 CAB. 17 _____

b. 0846 CAB. 01 _____

7.22.6 ALL M&TE HAS BEEN DISCONNECTED _____

3. ACCEPTANCE CRITERIA MET YES ( ) NO ( )

4. THE FOLLOWING CONDITIONS HAVE BEEN MET:

a. OPERATIONS NOTIFIED THAT 1RH-2 AND 1RH-40 ARE NO LONGER AFFECTED DUE TO THE PERFORMANCE OF THIS PROCEDURE AND MAY BE POSITIONED AS DESIRED.

b. OPERATIONS NOTIFIED LOOP RETURNED TO SERVICE.

_____/____
OPERATOR SIGNATURE DATE

5. MST COMPLETED _____ ____/____/____
MAINTENANCE TECH. DATE HOUR MIN

Work Request No. _____

DATA SHEET

7.23 Close Out (continued)

COMMENTS _____

_____

_____

_____

PERFORMED BY: (Printed Name/Signature)	INITIALS	DATE
_____ / _____	_____	_____
_____ / _____	_____	_____
_____ / _____	_____	_____
_____ / _____	_____	_____
_____ / _____	_____	_____
_____ / _____	_____	_____

APPROVED BY _____ DATE _____
FOREMAN OR DESIGNEE

D

Attachment 1
OPERATOR PREREQUISITE SUMMARY SHEET

[Reactor Coolant System Wide Range Pressure (P-0402)]

1. This procedure affects equipment that is covered by the following Tech. Spec. L.C.O.s: 3.3.3.5, 3.3.3.6, 3.4.1.4, 3.5.2, 3.5.3, and 3.9.8.

2. The following alarms and indications may not indicate the actual field conditions during the test.

   Annunciators:

   a. ALB-4,3-2; 1RH-2 NOT SHUT AND RCS PRESS HIGH

   b. ALB-4,3-4; 1RH-40 NOT SHUT AND RCS PRESS HIGH

   Indicators:

   a. PI-01RC-0402.1SAW, MCB-1A2, RCS WIDE RANGE PRESSURE

   b. PI-01RC-0402AW, MCB-1A2, RCS NARROW RANGE PRESSURE

   c. PI-01RC-0402.2SA, ACP-II, RCS WIDE RANGE PRESSURE

   Recorder:

   a. PR-01RC-0402SW Pen 1, Recorder Panel, RCS WIDE RANGE PRESSURE

   Computer:

   a. RVLIS Model 86 Microprocessor, Cab. SA

   b. PRC0402

   c. PRC9455

   d. TRC9402

3. Performance of this procedure will cause the LOSS of RCS Wide Range Pressure (P-0402) to the Subcooling Margin Monitor. AC 2/1

4. No testing shall be allowed in Channel P-0403 during the performance of this procedure.

5. The RHR interlock to prevent opening valves 1RH-2 and 1RH-40 until RCS Wide Range Pressure is below 363 PSIG will be DEFEATED, when this loop is placed in TEST.

6. IF the plant IS in Midloop Operation, THEN this procedure CAN NOT be performed until the Shift Foreman has signed off that he has reviewed the OPERATOR PREREQUISITE SUMMARY SHEET and that he grants permission to perform the procedure with the plant in Midloop Operation.

D

D

F

Attachment 1
OPERATOR PREREQUISITE SUMMARY SHEET

5. The RHR interlock to prevent opening valves 1RH-2 and 1RH-40 until RCS Wide Range Pressure is below 363 PSIG will be DEFEATED, when this loop is placed in TEST.

6. IF the plant IS in Midloop Operation, THEN this procedure CAN NOT be performed until Shift Foreman has signed off that he has reviewed OPERATOR PREREQUISITE SUMMARY SHEET and that he grants permission to perform procedure with plant in Midloop Operation.

7. Procedure performance will cause the following to occur in the circuit for CVCS Miniflow valve 2CSO-V757SA-1 (1CS-746):

   a. CYCLING of contacts that provide AUTOMATIC OPENING on high RCS pressure coincident with an SI (Control switch in NORMAL).

   b. CYCLING of contacts that provide AUTOMATIC CLOSING on low RCS pressure coincident with an SI (Control switch in NORMAL). If the contacts are CLOSED during an SI, 1CS-746 can NOT be OPENED until the RWST SI RESET switch has been taken to RESET OR contacts are CYCLED OPEN.