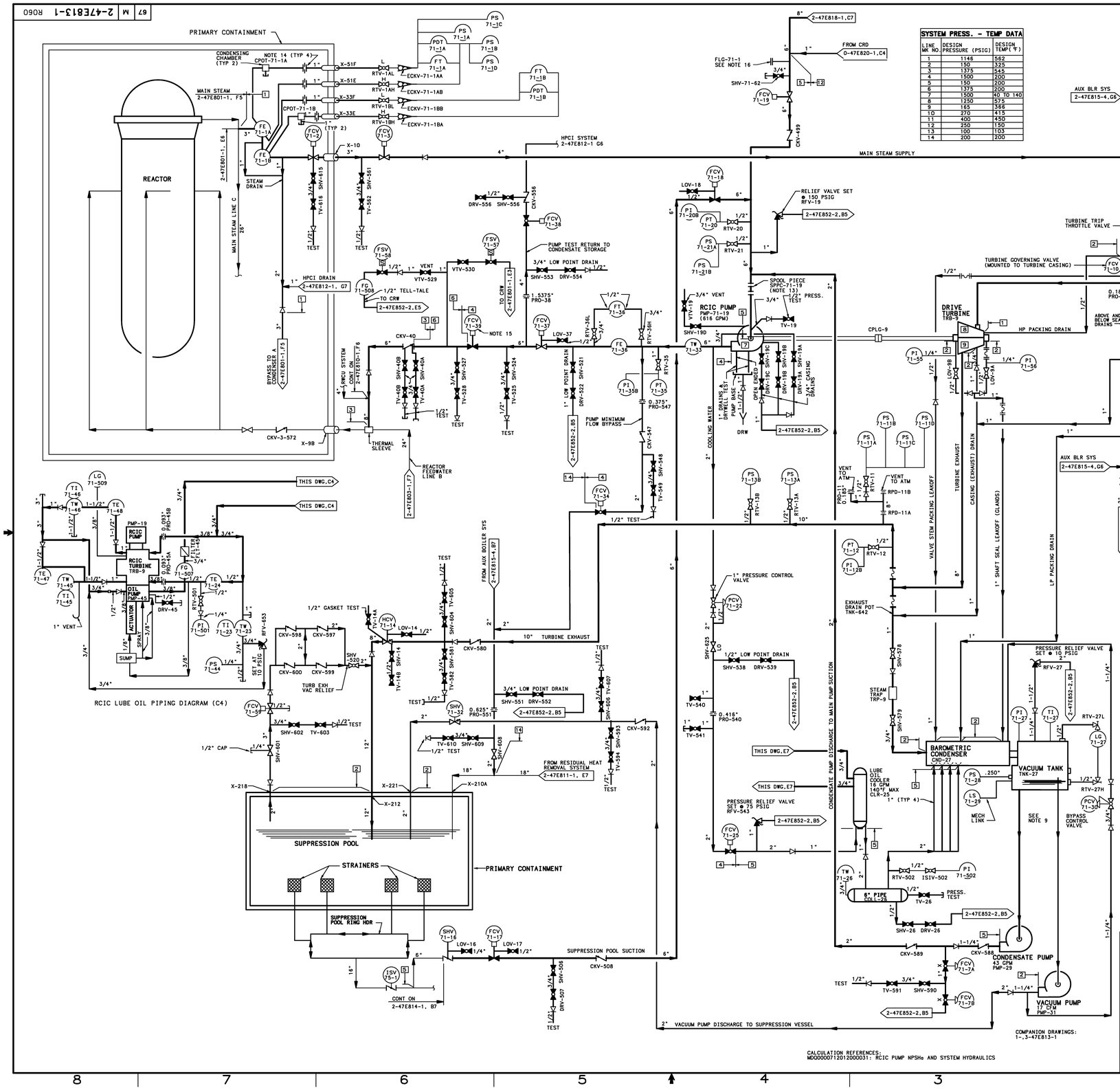


| SYSTEM PRESS. - TEMP DATA | | |
|---|---|---|
| LINE MK NO. | DESIGN PRESSURE (PSIG) | DESIGN TEMP(°F) |
| 1 | 1145 | 562 |
| 2 | 150 | 325 |
| 3 | 1375 | 545 |
| 4 | 1500 | 200 |
| 5 | 150 | 200 |
| 6 | 1375 | 200 |
| 7 | 1500 | 40 TO 140 |
| 8 | 1250 | 575 |
| 9 | 165 | 386 |
| 10 | 270 | 415 |
| 11 | 400 | 450 |
| 12 | 250 | 150 |
| 13 | 100 | 103 |
| 14 | 200 | 200 |

NOTES:

1. CRW DRAINS ARE CONNECTED TO REACTOR BUILDING EQUIPMENT DRAIN SUMP.
2. DRW DRAINS ARE CONNECTED TO REACTOR BUILDING FLOOR DRAIN SUMP.
3. ALL VALVES ARE THE SAME SIZE AS PIPING UNLESS OTHERWISE NOTED.
4. ALL VALVE DRAINS AND VENTS ARE PIPED TO CRW.
5. UNIDS ON DRAWINGS ARE FOR REFERENCE ONLY AND ARE ABBREVIATED AS SHOWN IN THE EXAMPLE TO MEET SPACE CONSTRAINTS. REFER TO MEL FOR COMPLETE UNIDS. ALL UNIDS ARE IN UNIT 2, SYS 71 UNLESS OTHERWISE NOTED. LEADING ZEROES SHOWN IN MEL AS PART OF THE UNID ARE NOT DEPICTED. FOR ADDITIONAL GUIDANCE, REFER TO NEDP-4.

   EXAMPLE: MEL UNID — BFN-0-SHV-018-0502; DRAWING UNID — SHV-502
   MEL UNID — BFN-2-PT-003-0204C; DRAWING UNID — PT-204C
6. [1] ETC, DENOTES DESIGN PRESSURE AND TEMPERATURE AS GIVEN IN TABLE, THIS DRAWING.
7. DELETED
8. THE DESIGN PRESSURE AND TEMPERATURE OF ALL DRAIN AND VENT LINES THROUGH THE LAST ISOLATION VALVE SHALL BE THE SAME AS THE PROCESS LINE.
9. CONDENSATE PUMP AND VACUUM PUMP SUCTION LINES ARE INTERNAL TO TANK AND SHOWN ONLY FOR CLARITY.
10. HYDROTESTING OF THERMOWELLS AND FITTINGS SHALL BE PERFORMED IN SHOP AT 30 PSIG. SYSTEM LEAK TEST PER ANSI B31.10 POWER PIPING CODE.
11. FOR DESIGN PRESSURE AND DESIGN TEMPERATURE SEE TERRY STEAM TURBINE MANUAL, CONTROL # 0467 (CONTRACT # 80744).
12. VENT, DRAIN AND TEST CONNECTIONS 1-1/2" AND BELOW CAN BE PROVIDED WITH PIPE CAPS OR HOSE CONNECTION FITTINGS WHERE REQUIRED BY PLANT PERSONNEL. THIS CONFIGURATION IS SUPPORTED BY ENGINEERING CALCULATION CD-Q0999-923399.
13. SPOOL PIECE MAY BE REPLACED BY STRAINER DURING MAINTENANCE. THE SPOOL PIECE MUST BE INSTALLED PRIOR TO RETURNING THE SYSTEM TO SERVICE. SEE 0-47E456-1, -2 FOR STRAINER DETAIL.
14. ORIFICE COUPLING, SEE 0-47E600-20, DETAIL P20.
15. VALVE 2-FCV-071-0039 WILL SEAL LEAK TIGHT ONLY IN THE DIRECTION OF FEEDWATER TO RCIC SYSTEM DUE TO A PRESSURE LOCKING MODIFICATION WHICH DRILLED A 1/4" HOLE IN THE FEEDWATER SIDE FACE OF THE VALVE. (DCN T413011)
16. THE PIPING COMPONENT IDENTIFIED IS A LINE STOP FITTING WITH AN INTERNAL PLUG AND BLIND FLANGE. NORMAL CONFIGURATION DOES NOT ISOLATE FLOW AND FITTING, PLUG AND BLIND FLANGE ARE CONSIDERED PRESSURE RETAINING.

REFERENCE DRAWINGS:

| MEL | |
|---|---|
| | VALVE MARKER TAG TABULATION |
| 2-47E456-408 | MECHANICAL-RCIC OIL PIPING INSTRUMENTS |
| 2-47E852-1,-2 | FLOW DIAGRAM - DRAINAGE INSTALLATION SECTIONS AND DETAILS |
| 0-47E820-1 | FLOW DIAGRAM - CONTROL ROD DRIVE |
| 0-47E800-1 | FLOW DIAGRAM - GENERAL PLANT SYSTEMS |
| 0-47E800-2 | MECHANICAL - SYMBOLS & FLOW DIAGRAM DRAWING INDEX |
| 2-47E815-4 | FLOW DIAGRAM AUXILIARY BOILER SYSTEM |
| 2-47E801-1 | FLOW DIAGRAM - MAIN STEAM |
| 2-47E811-1 | FLOW DIAGRAM - RHR SYSTEM |
| 2-47E812-1 | FLOW DIAGRAM - HPCI SYSTEM |
| 0-47E815-1 | FLOW DIAGRAM - AUX BOILER SYSTEM |
| 2-47E818-1 | FLOW DIAGRAM - CNDS STORAGE & SUPPLY SYSTEM |
| MEL | INSTRUMENT TABULATION |
| 2-47E610-71-1,2 | CONTROL DIAGRAM - RCIC SYSTEM |
| 2-47E803-1 | FLOW DIAGRAM - REACTOR FEEDWATER |
| 2-47E810-1 | FLOW DIAGRAM - REACTOR WATER CLEANUP |
| 2-47E814-1 | FLOW DIAGRAM - CORE SPRAY |

CALCULATION REFERENCES:
MDG00007120120000031; RCIC PUMP NPSHa AND SYSTEM HYDRAULICS

# AMENDMENT 26

POWERHOUSE
UNIT 2

BROWNS FERRY NUCLEAR PLANT
FINAL SAFETY ANALYSIS REPORT

REACTOR CORE ISOLATION COOLING SYSTEM FLOW DIAGRAM

FIGURE 4.7-1a

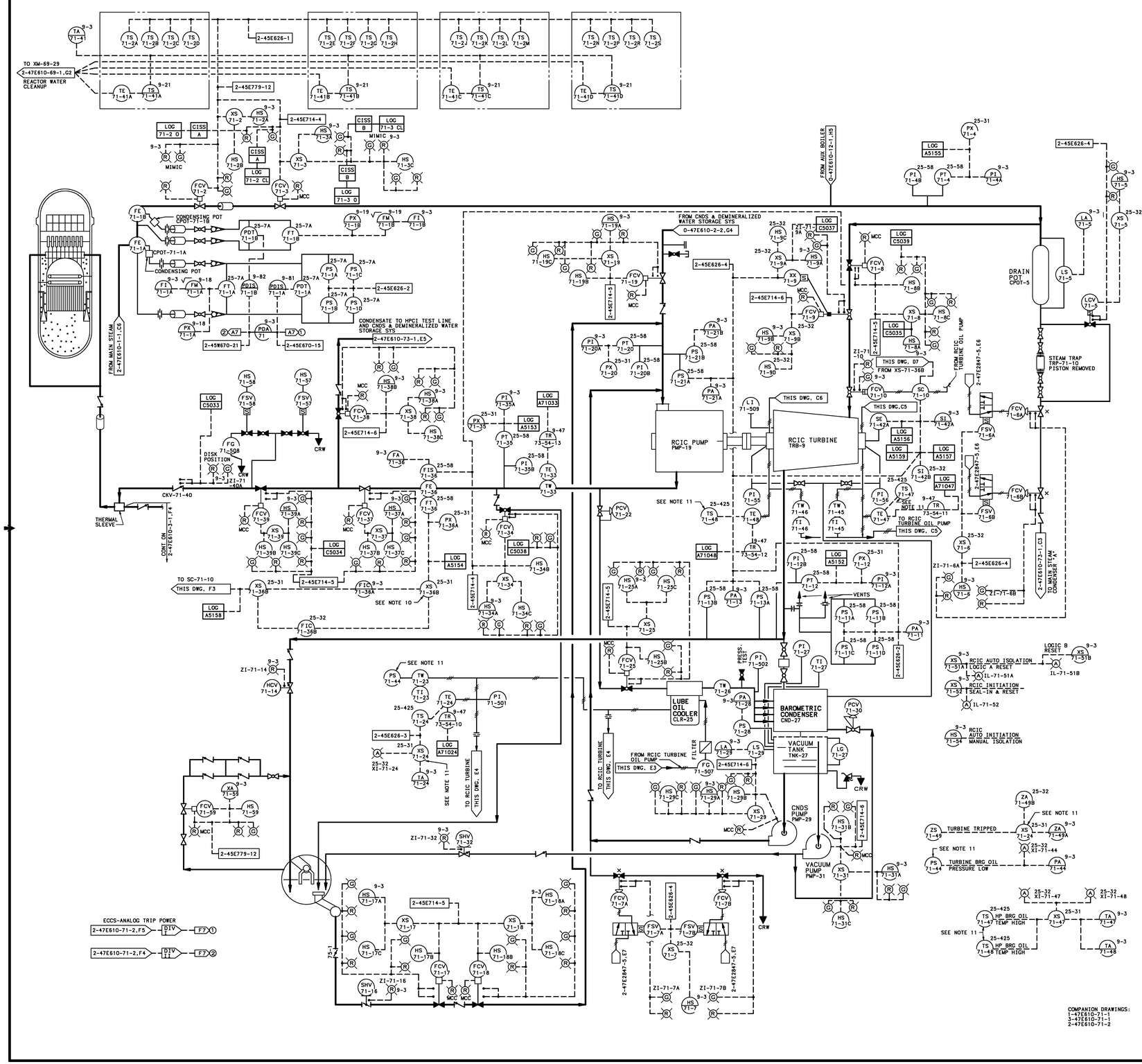


NOTES:

1. THE REACTOR CORE ISOLATION COOLING SYSTEM IS DESIGNED TO COOL THE CORE WHEN THE REACTOR VESSEL IS ISOLATED AND REACTOR FEEDWATER IS UNAVAILABLE. WHEN THE WATER LEVEL IN THE REACTOR VESSEL REACHES SETPOINT, THE RCIC SYSTEM IS AUTOMATICALLY STARTED BY ACTIVATION OF REACTOR LEVEL SWITCHES LIS-3-58A, LIS-3-58B, LIS-3-58C AND LIS-3-58D (2-47E610-3-1). ARRANGED IN ONE-OUT-OF-TWO-TWICE LOGIC TO OPEN VALVE FCV-71-8. THE SAME SIGNAL CLOSES DRAIN LINE VALVES FCV-71-6A AND FCV-71-6B.

2. A MECHANICAL SPEED GOVERNOR PREVENTS TURBINE OVERSPEED BY TRIPPING THROTTLE TRIP VALVE FCV-71-9 WHEN A TURBINE OVERSPEED OCCURS. A CONTROL GOVERNOR, FIC-71-36, EQUIPPED WITH AUTOMATIC AND MANUAL MEANS FOR SPEED SET POINT CONTROL REGULATES TURBINE SPEED VIA "TURBINE SPEED CHANGER" TO CONTROL RCIC MAIN PUMP DISCHARGE FLOW.

3A. A RCIC STANDBY MODE SIGNAL SHALL BE INITIATED AT REACTOR VESSEL WATER LEVEL 8 (HIGH LEVEL). THE REACTOR VESSEL WATER LEVEL 8 SIGNAL SHALL BE INITIATED BY TWO LEVEL SWITCHES ARRANGED IN A TWO-OUT-OF-TWO LOGIC CONFIGURATION. THE REACTOR VESSEL WATER LEVEL 8 SIGNAL SHALL: (A) CLOSE THE STEAM ADMISSION VALVE FCV-71-8 AND (B) CLOSE THE MINI-FLOW ISOLATION VALVE FCV-71-34. IN THE EVENT AN INITIATION SIGNAL IS RECEIVED AFTER THE SYSTEM HAS BEEN SHUTDOWN ON HIGH RV LEVEL, THE SYSTEM SHALL BE CAPABLE OF AUTOMATIC RESTART.

3B. THE RCIC TURBINE TRIP VALVE IS TRIPPED BY:
A. TURBINE OVERSPEED VIA THE SPEED GOVERNOR.

C. LOW RCIC PUMP SUCTION PRESSURE SENSED BY PS-71-21.

D. HIGH RCIC TURBINE EXHAUST PRESSURE SENSED BY EITHER PS-71-13A OR PS-71-13B.
E. MANUALLY FROM THE MAIN CONTROL ROOM BY HS-71-9A OR BY HS-71-9C ON PANEL 25-32.

A TURBINE TRIP:

A. CLOSES FCV-71-9.
B. CLOSES FCV-71-34.
C. ANNUNCIATES ON ZA-71-49A OR 49B.
D. ACTIVATES THE ALARM ASSOCIATED WITH THE CONDITION INITIATING THE TRIP.

4. THE TURBINE CASING IS PROTECTED FROM OVERPRESSURE BY TWO RUPTURE DISCS. PS-71-11A THRU D DETECTS DISC RUPTURES AND ANNUNCIATES ON PA-71-11 IN THE MAIN CONTROL ROOM. PROVIDES 1 OUT OF 2 TWICE LOGIC TO INITIATE AUTO ISOLATION OF TURBINE (SEE NOTE 5).

5. THE RCIC TURBINE WILL BE AUTOMATICALLY ISOLATED FROM THE STEAM SUPPLY BY CLOSING ISOLATION VALVES FCV-71-2 AND FCV-71-3 IF:

A. A HIGH PRESSURE DROP OCCURS ACROSS THE RCIC ELBOW TYPE FLOW ELEMENT FE-73-1A & 1B WHEN THE STEAM LINE RUPTURES. THE HIGH FLOW IS SENSED BY EITHER PDT-71-1A OR PDT-71-1B AND ANNUNCIATED ON PDA-71-1
B. HIGH AREA TEMPERATURES INDICATING A STEAM LINE BREAK ARE DETECTED BY ANY OF FOUR SETS OF TEMPERATURE SWITCHES (TS-71-2A THROUGH TS-71-2S EACH SET CONNECTED IN ONE-OUT-OF-TWO-TWICE LOGIC. FOUR INDEPENDENT TEMPERATURE SENSING ELEMENTS AND ASSOCIATED TEMPERATURE SWITCHES TE-71-41A AND TS-71-41A THROUGH TE-71-41D AND TS-71-41D SET AT 175° F ACTIVATE THE MAIN CONTROL ROOM ANNUNCIATOR TA-71-41.
C. LOW REACTOR PRESSURE IS DETECTED BY PS-71-1A THROUGH PS-71-1D ARRANGED IN ONE-OUT-OF-TWO-TWICE LOGIC.
D. HIGH PRESSURE BETWEEN THE TURBINE EXHAUST RUPTURE DISCS (SEE NOTE 4).

6. NORMALLY MAKEUP WATER FOR THE RCIC PUMP SUCTION IS SUPPLIED BY THE CONDENSATE STORAGE TANK THROUGH FLOW CONTROL VALVE FCV-71-19. AN ALTERNATE SOURCE OF WATER IS OBTAINED FROM THE SUPPRESSION POOL THROUGH ISOLATION VALVES FCV-71-17 AND FCV-71-18. PUMP DISCHARGE FLOW ROUTES ARE AS FOLLOWS:

A. NORMALLY VIA THE FEEDWATER LINE TO THE REACTOR THROUGH ISOLATION VALVES FCV-71-37, FCV-71-39, AND CHECK VALVE FCV-71-40.
B. DURING TESTING VIA TEST LINE TO CONDENSATE STORAGE THROUGH FLOW CONTROL VALVE FCV-71-38.
C. MINIMUM FLOW BYPASS TO THE SUPRESSION POOL THROUGH FLOW CONTROL VALVE FCV-71-34.

7. IF RCIC SYSTEM OPERATION IS REQUIRED WHEN IT IS IN THE TEST MODE, THE CONTROL SYSTEM IS DESIGNED TO AUTOMATICALLY RETURN THE SYSTEM TO THE OPERATING MODE.

8. COOLING WATER FOR THE PUMP, TURBINE, AND LUBE OIL COOLER IS SUPPLIED FROM THE PUMP DISCHARGE LINE THROUGH PRESSURE CONTROL VALVE FCV-71-22 SET AT 75 PSIA.

9. TRANSFER AND CONTROL SWITCHES ASSOCIATED WITH BACKUP CONTROL WILL BE ON THE DESIGNATED PANELS OR LOCATED ON THE APPROPRIATE 250V DC MOV BOARDS.

10. XS-71-36B IS SHOWN TWICE TO SHOW HOW THIS TRANSFER SWITCH DISCONNECTS FIC-71-36A AND CONNECTS FIC-71-36B LOCATED AT THE BACKUP CONTROL CENTER.

11. XS-71-24, PS-71-44, TS-71-47 & TS-71-48 ARE SHOWN TWICE TO SHOW HOW THESE SWITCHES TRANSFER INDICATION FROM THE MAIN CONTROL PANEL 9-3 TO THE BACKUP CONTROL PANEL 25-32

12. UNIDS ON DRAWINGS ARE FOR REFERENCE ONLY AND ARE ABBREVIATED AS SHOWN IN THE EXAMPLE TO MEET SPACE CONSTRAINTS. REFER TO MEL FOR COMPLETE UNIDS. ALL UNIDS ARE IN UNIT 2 SYSTEM 71. UNLESS OTHERWISE NOTED. LEADING ZEROES SHOWN IN MEL AS PART OF THE UNID ARE NOT DEPICTED. FOR ADDITIONAL GUIDANCE, REFER TO NEDP-4.

| EXAMPLE: | MEL UNID | DRAWING UNID |
|---|---|---|
| | BFN-0-SHV-018-0502 | SHV-18-502 |
| | BFN-1-HS-031-0180A | HS-31-180A |
| | BFN-2-PT-003-0204C | PT-3-204C |

13. COMPLETE LOGIC FOR REACTOR CORE ISOLATION SYSTEM IS SHOWN ON MECHANICAL LOGIC DIAGRAM LISTED IN REFERENCE DRAWINGS.

REFERENCE DRAWINGS:

0-47E800-1.....FLOW DIAGRAM-GENERAL PLANT SYSTEMS
0-47E800-2.....MECHANICAL SYMBOLS AND FLOW DIAG DWG INDEX
2-47E2847-3.....FLOW DIAGRAM-CONTROL AIR SUPPLY
2-47E813-1.....FLOW DIAGRAM-RCIC
2-47E610-3-1.....CONTROL DIAGRAM-HPCI
2-47E610-3-1.....CONTROL DIAGRAM-REACTOR FEEDWATER
2-47E610-1-1.....CONTROL DIAGRAM-MAIN STEAM
2-47E610-69-1.....CONTROL DIAGRAM-REACTOR WATER CLEANUP
0-47E610-2-2.....CONTROL DIAGRAM-CONDENSATE SYSTEM
0-47E610-12-1.....CONTROL DIAGRAM-AUXILIARY BOILER SYSTEM
0-47E456-1,-2.....RCIC SYSTEM MECHANICAL DRAWINGS
0-47W456-3,-4.....RCIC SYSTEM MECHANICAL DRAWINGS
MEL.....INSTRUMENT TABULATIONS FOR SYSTEM 71
2-45E670-SERIES.....WIRING DIAGRAM-ECCS
2-45E626-1,-3,-4.....WIRING DIAG REACTOR CORE ISOLATION COOLING
2-45W670-21.....WIRING DIAG EMERG CORE COOLING SYS DIV I
2-45E714-5,-6.....WIRING DIA 250V REAC MOV BD 2C
2-45E779-5,-12.....WIRING DIAGRAM 480V SHUTDOWN AUX POWER SCH DIA
2-47E611-64-SERIES.....MECHANICAL LOGIC DIAGRAM PRIMARY CONTAINMENT ISOLATION SYSTEM
2-47E611-71-SERIES.....MECHANICAL LOGIC DIAGRAM REACTOR CORE ISOLATION COOLING SYSTEM

GE DRAWINGS:

729E652-1.....FUNCTIONAL CONTROL DIAGRAMS-RCIC
2-729E652-4.....FUNCTIONAL CONTROL DIAGRAMS-RCIC

TERRY TURBINE CO.:
C-883-X .....RCIC TURBINE GOVERNOR CONTROL SYSTEM

NASH ENGR CO.:
D-14-1365 .....RCIC BAROMETRIC CONDENSER

SYMBOLS:

☒ QUICK DISCONNECT WITH SINGLE END SHUTOFF

⊠ QUICK DISCONNECT

COMPANION DRAWINGS:
1-47E610-71-1
3-47E610-71-1
2-47E610-71-2

AMENDMENT 26

POWERHOUSE
UNIT 2

BROWNS FERRY NUCLEAR PLANT
FINAL SAFETY ANALYSIS REPORT

REACTOR CORE ISOLATION
COOLING SYSTEM
MECHANICAL CONTROL DIAGRAM

FIGURE 4.7-1b

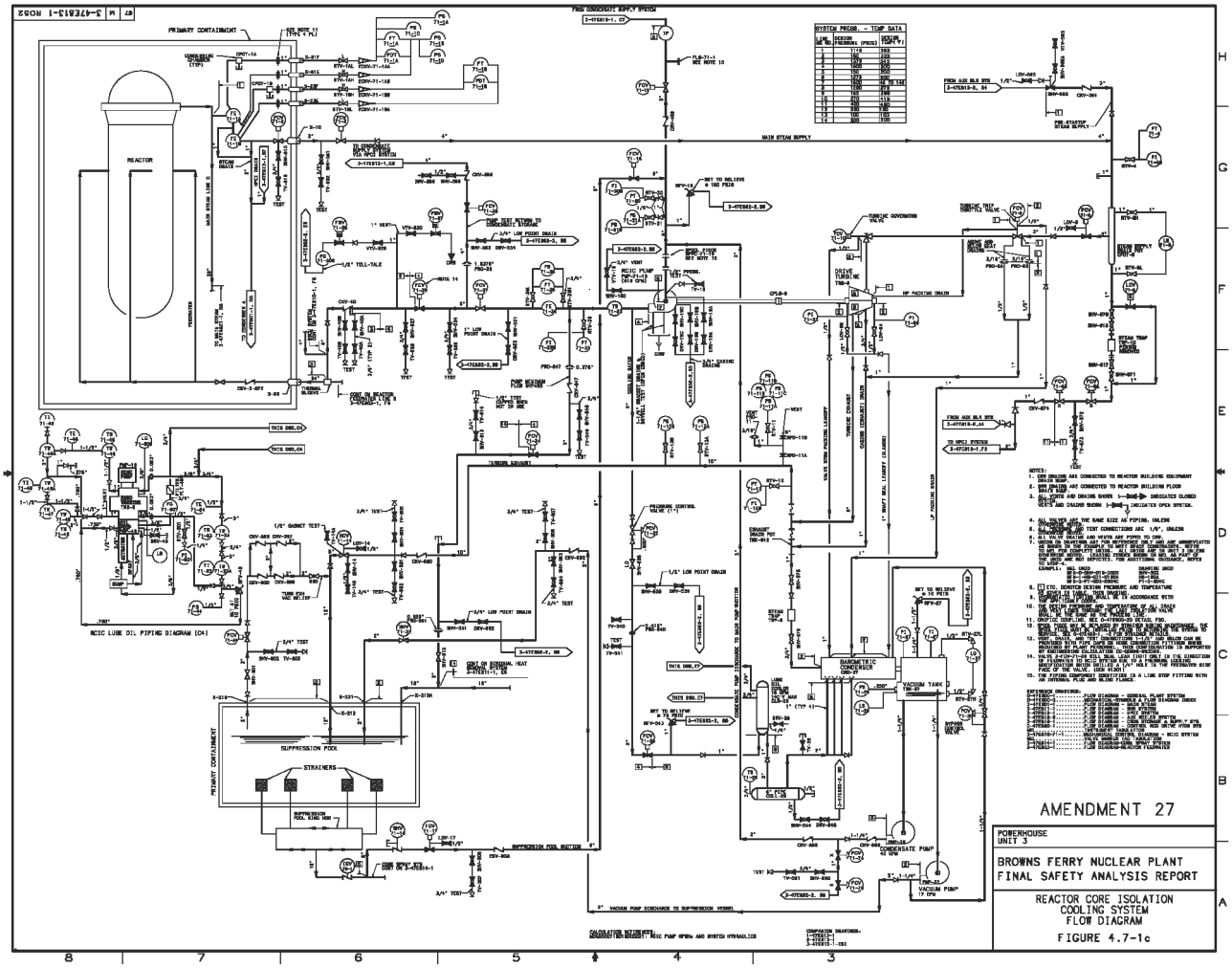
RCIC LUBE OIL PIPING DIAGRAM (C4)
REACTOR
PRIMARY CONTAINMENT
SUPPRESSION POOL
STRAINERS
MAIN STEAM SUPPLY
FROM CONDENSATE SUPPLY SYSTEM
BAROMETRIC CONDENSER
VACUUM TANK
CONDENSATE PUMP
VACUUM PUMP
TURBINE
SYSTEM PRESS. - TEMP DATA
AMENDMENT 27
POWERHOUSE UNIT 3
BROWNS FERRY NUCLEAR PLANT
FINAL SAFETY ANALYSIS REPORT
REACTOR CORE ISOLATION COOLING SYSTEM FLOW DIAGRAM
FIGURE 4.7-1c

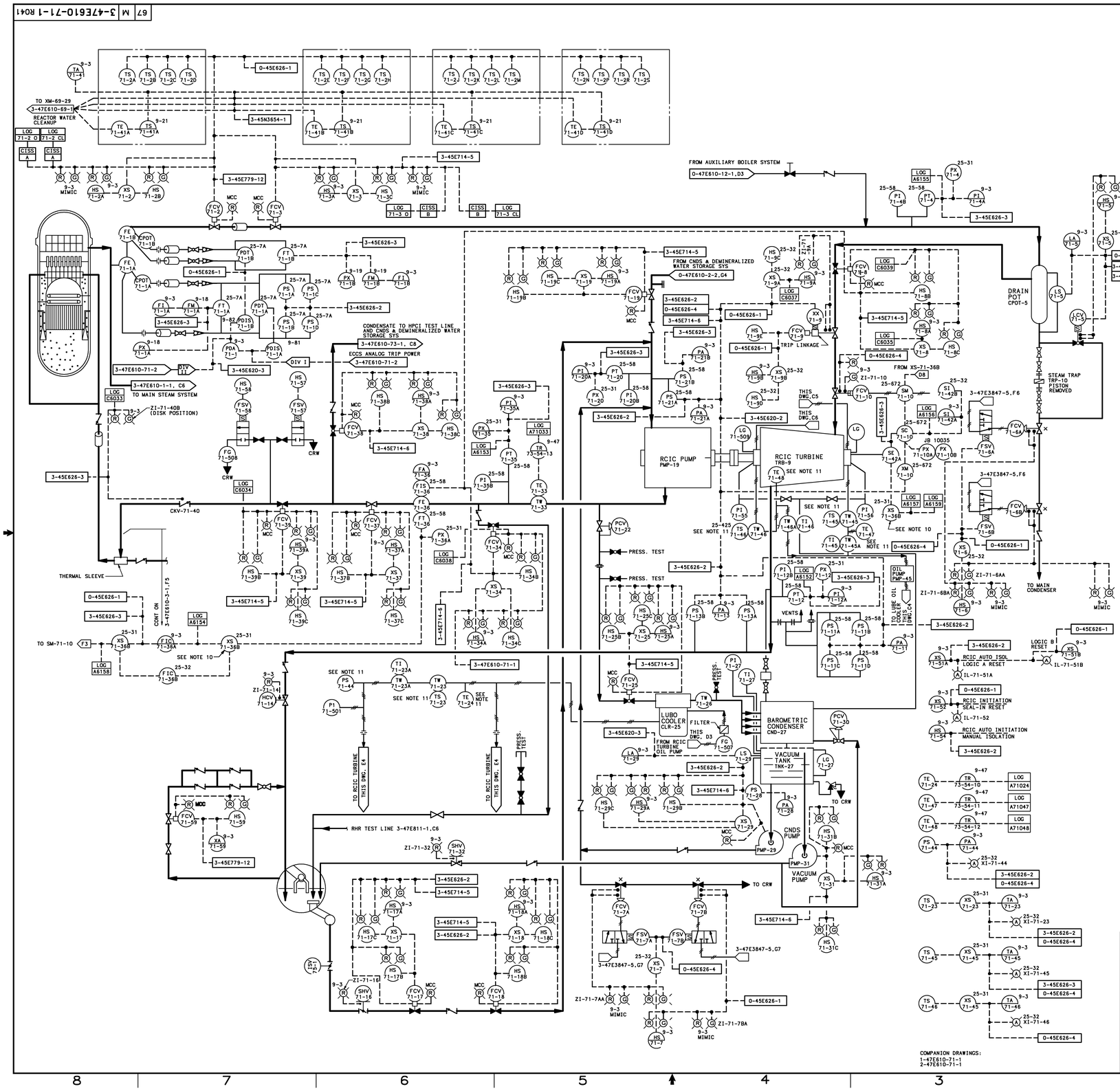


NOTES:

1. THE REACTOR CORE ISOLATION COOLING SYSTEM IS DESIGNED TO COOL THE CORE WHEN THE REACTOR VESSEL IS ISOLATED AND REACTOR FEEDWATER IS UNAVAILABLE. WHEN THE WATER LEVEL IN THE REACTOR VESSEL REACHES 31.5" BELOW REACTOR FEEDWATER ZERO, THE RCIC SYSTEM IS AUTOMATICALLY STARTED BY ACTIVATION OF REACTOR LEVEL SWITCHES LIS-3-58A, LIS-3-58B, LIS-3-58C, AND LIS-3-58D (SEE 3-47E610-3-1). ARRANGED IN A ONE-OUT-OF-TWO-TWICE LOGIC TO OPEN VALVE FCV-71-8. THE SAME SIGNAL CLOSES DRAIN LINE VALVES FCV-71-6A AND FCV-71-6B.
2. A MECHANICAL SPEED GOVERNOR PREVENTS TURBINE OVERSPEED BY TRIPPING THROTTLE TRIP VALVE FCV-71-9 WHEN A TURBINE OVERSPEED OCCURS. A CONTROL GOVERNOR, FIC-71-36, EQUIPPED WITH AUTOMATIC AND MANUAL MEANS FOR SPEED SET POINT CONTROL REGULATES TURBINE SPEED VIA "TURBINE SPEED CHANGER" TO CONTROL RCIC MAIN PUMP DISCHARGE FLOW.

3A. A RCIC STANDBY MODE SIGNAL SHALL BE INITIATED AT REACTOR VESSEL WATER LEVEL 8 (HIGH LEVEL). THE REACTOR VESSEL WATER LEVEL 8 SIGNAL SHALL BE INITIATED BY TWO LEVEL SWITCHES ARRANGED IN A TWO-OUT-OF-TWO LOGIC CONFIGURATION. THE REACTOR VESSEL WATER LEVEL 8 SIGNAL SHALL: (A) CLOSE THE STEAM ADMISSION VALVE FCV-71-8 AND (B) CLOSE THE MINI FLOW ISOLATION VALVE FCV-71-34. IN THE EVENT AN INITIATION SIGNAL IS RECEIVED AFTER THE SYSTEM HAS BEEN SHUTDOWN OR HIGH RV LEVEL, THE SYSTEM SHALL BE CAPABLE OF AUTOMATIC RESTART.

3B. THE RCIC TURBINE TRIP VALVE IS TRIPPED BY:
   A. TURBINE OVERSPEED VIA THE SPEED GOVERNOR.
   B. DELETED.
   C. LOW RCIC PUMP SUCTION PRESSURE SENSED BY PS-71-21A.
   D. HIGH RCIC TURBINE EXHAUST PRESSURE SENSED BY EITHER PS-71-13A OR PS-71-13B.
   E. MANUALLY FROM THE MAIN CONTROL ROOM BY HS-71-9A OR BY HS-71-9C ON PANEL 25-32.

   A TURBINE TRIP:
   A. CLOSES FCV-71-9.
   B. CLOSES FCV-71-34.
   C. ANNUNCIATES ON ZA-71-49A OR 49B.
   D. ACTIVATES THE ALARM ASSOCIATED WITH THE CONDITION INITIATING THE TRIP.

4. THE TURBINE CASING IS PROTECTED FROM OVERPRESSURE BY TWO RUPTURE DISCS. PS-71-11A THRU D SET AT 10 PSIG DETECTS DISC RUPTURES AND ANNUNCIATES ON PA-71-11 IN THE MAIN CONTROL ROOM.
5. THE RCIC TURBINE WILL BE AUTOMATICALLY ISOLATED FROM THE STEAM SUPPLY BY CLOSING ISOLATION VALVES FCV-71-2 AND FCV-71-3 IF:
   A. A HIGH PRESSURE DROP OCCURS ACROSS THE RCIC ELBOW TYPE FLOW ELEMENT FE-71-1A & 1B WHEN THE STEAM LINE RUPTURES. THE HIGH FLOW IS SENSED BY EITHER PDIS-71-1A OR PDIS-71-1B AND ANNUNCIATED ON PA-71-1.
   B. HIGH AREA TEMPERATURES INDICATIVE OF A STEAM LINE BREAK ARE DETECTED BY ANY OF FOUR SETS OF TEMPERATURE SWITCHES TS-71-2A THROUGH TS-71-2D SET AT 194°F. EACH SET CONNECTED IN ONE-OUT-OF-TWO-TWICE LOGIC. FOUR INDEPENDENT TEMPERATURE SENSING ELEMENTS AND ASSOCIATED TEMPERATURE SWITCHES TE-71-41A AND TS-71-41A THROUGH TE-71-41D AND TS-71-41D SET AT 175°F ACTIVATE THE MAIN CONTROL ROOM ANNUNCIATOR TA-71-44.
   C. LOW REACTOR PRESSURE IS DETECTED BY PS-71-1A THROUGH PS-71-1D EACH SET AT 50 PSIG AND ARRANGED IN ONE-OUT-OF-TWO-TWICE LOGIC.
6. NORMALLY MAKEUP WATER FOR THE RCIC PUMP SUCTION IS SUPPLIED BY THE CONDENSATE STORAGE TANK THROUGH FLOW CONTROL VALVE FCV-71-19. AN ALTERNATE SOURCE OF WATER IS OBTAINED FROM THE SUPPRESSION POOL THROUGH ISOLATION VALVES FCV-71-17 AND FCV-71-18. PUMP DISCHARGE FLOW ROUTES ARE AS FOLLOWS:
   A. NORMALLY VIA THE FEEDWATER LINE TO THE REACTOR THROUGH ISOLATION VALVES FCV-71-37, FCV-71-39, AND CHECK VALVE FCV-71-40.
   B. DURING TESTING VIA TEST LINE TO CONDENSATE STORAGE THROUGH FLOW CONTROL VALVE FCV-71-36.
   C. MINIMUM FLOW BYPASS TO THE SUPPRESSION POOL THROUGH FLOW CONTROL VALVE FCV-71-34.
7. IF RCIC SYSTEM OPERATION IS REQUIRED WHEN IT IS IN THE TEST MODE, THE CONTROL SYSTEM IS DESIGNED TO AUTOMATICALLY RETURN THE SYSTEM TO THE OPERATING MODE.
8. COOLING WATER FOR THE PUMP, TURBINE, AND LUBE OIL COOLER IS SUPPLIED FROM THE PUMP DISCHARGE LINE THROUGH PRESSURE CONTROL VALVE FCV-71-22 SET AT 75 PSIA.
9. TRANSFER AND CONTROL SWITCHES ASSOCIATED WITH BACKUP CONTROL WILL BE ON THE DESIGNATED PANELS OR LOCATED ON THE APPROPRIATE 250V DC MOV BOARDS.
10. XS-71-36B IS SHOWN THREE TIMES TO SHOW HOW THIS TRANSFER SWITCH DISCONNECTS FIC-71-36A AND CONNECTS FIC-71-36B LOCATED AT THE BACKUP CONTROL CENTER.
11. XS-71-23, XS-71-45, TS-71-45 & -46, XS-71-24 AND PS-71-44 ARE EACH SHOWN TWICE TO SHOW HOW THESE SWITCHES TRANSFER INDICATION FROM THE MAIN CONTROL PANEL 9-3 TO THE BACKUP CONTROL PANEL 25-32.
12. UNIDS ON DRAWINGS ARE FOR REFERENCE ONLY AND ARE ABBREVIATED AS SHOWN IN THE EXAMPLE TO MEET SPACE CONSTRAINTS. REFER TO MEL FOR COMPLETE UNIDS. ALL UNIDS ARE IN UNIT 3 UNLESS OTHERWISE NOTED. LEADING ZEROES SHOWN IN MEL AS PART OF THE UNID ARE NOT DEPICTED. FOR ADDITIONAL GUIDANCE, REFER TO NEDP-4.

| EXAMPLE: MEL UNID | DRAWING UNID |
|---|---|
| BFN-D-SHV-018-0502 | SHV-18-502 |
| BFN-1-HS-031-0180A | HS-31-180A |
| BFN-2-PT-003-0204C | PT-3-204C |

13. FLEX HOSE (\/\/\/) TO BE INSTALLED FOR TESTING PURPOSES ONLY.

REFERENCE DRAWINGS:

| MEL | |
|---|---|
| 3-47E610-1-1A | INSTRUMENT TABULATIONS |
| O-47E610-2-2 | CONTROL DIAGRAM-MAIN SYSTEM |
| 3-47E610-3-1 | CONTROL DIAGRAM-CONDENSATE SYSTEM |
| 3-47E610-69-1 | CONTROL DIAGRAM-REACTOR FEEDWATER |
| 2-47E611-71-4 | CONTROL DIAGRAM-REACTOR WATER CLEANUP |
| O-47E600-1 | LOGIC DIAGRAM-RCIC |
| O-47E800-2 | FLOW DIAGRAM-GENERAL PLANT SYSTEM |
| | MECHANICAL SYMBOLS & FLOW DIAGRAM INDEX |
| 3-47E610-73-1 | HPCI SYSTEM |
| 3-47E813-1 | FLOW DIAGRAM-RCIC SYSTEM |
| 3-45E779-12 | WIRING DIAGRAM-480V SHUTDOWN AUXILIARY POWER SCHEMATIC DIAGRAM |
| 3-45E714-5,-6 | WIRING DIAGRAM-250V MOV BOARD 1C SCHEMATIC DIAGRAM |
| O-45E626-1,-4 | WIRING DIAGRAM-RCIC SCHEMATIC DIAGRAM |
| 3-45E626-2,-3 | WIRING DIAGRAM-RCIC SCHEMATIC DIAGRAM |
| O-47E610-12-1 | CONTROL DIAGRAM-AUXILIARY BOILER |
| 3-45E620-2,-3 | KEY DIAGRAM-ANNUNCIATOR SYSTEM |
| 3-47E811-1 | FLOW DIAGRAM-RHR SYSTEM |
| 3-45N3654-1 | WIRING DIAGRAM-UNIT CONTROL BOARDS PANEL 9-21, SH 1 |
| 3-45W670-SERIES | WIRING DIAGRAM ECCS |

GE DRAWINGS:

| | |
|---|---|
| 729E652, SH 1 THRU 4 | FUNCTIONAL CONTROL DIAGRAMS-RCIC |

TERRY TURBINE CO.

| | |
|---|---|
| C-883-X | RCIC TURBINE GOVERNOR CONTROL SYSTEM |

NASH ENGR CO.

| | |
|---|---|
| D-14-1365 | RCIC BAROMETRIC CONDENSER |

COMPANION DRAWINGS:
1-47E610-71-1
2-47E610-71-1

AMENDMENT 26

POWERHOUSE
UNIT 3

BROWNS FERRY NUCLEAR PLANT
FINAL SAFETY ANALYSIS REPORT

REACTOR CORE ISOLATION
COOLING SYSTEM
MECHANICAL CONTROL DIAGRAM

FIGURE 4.7-1d

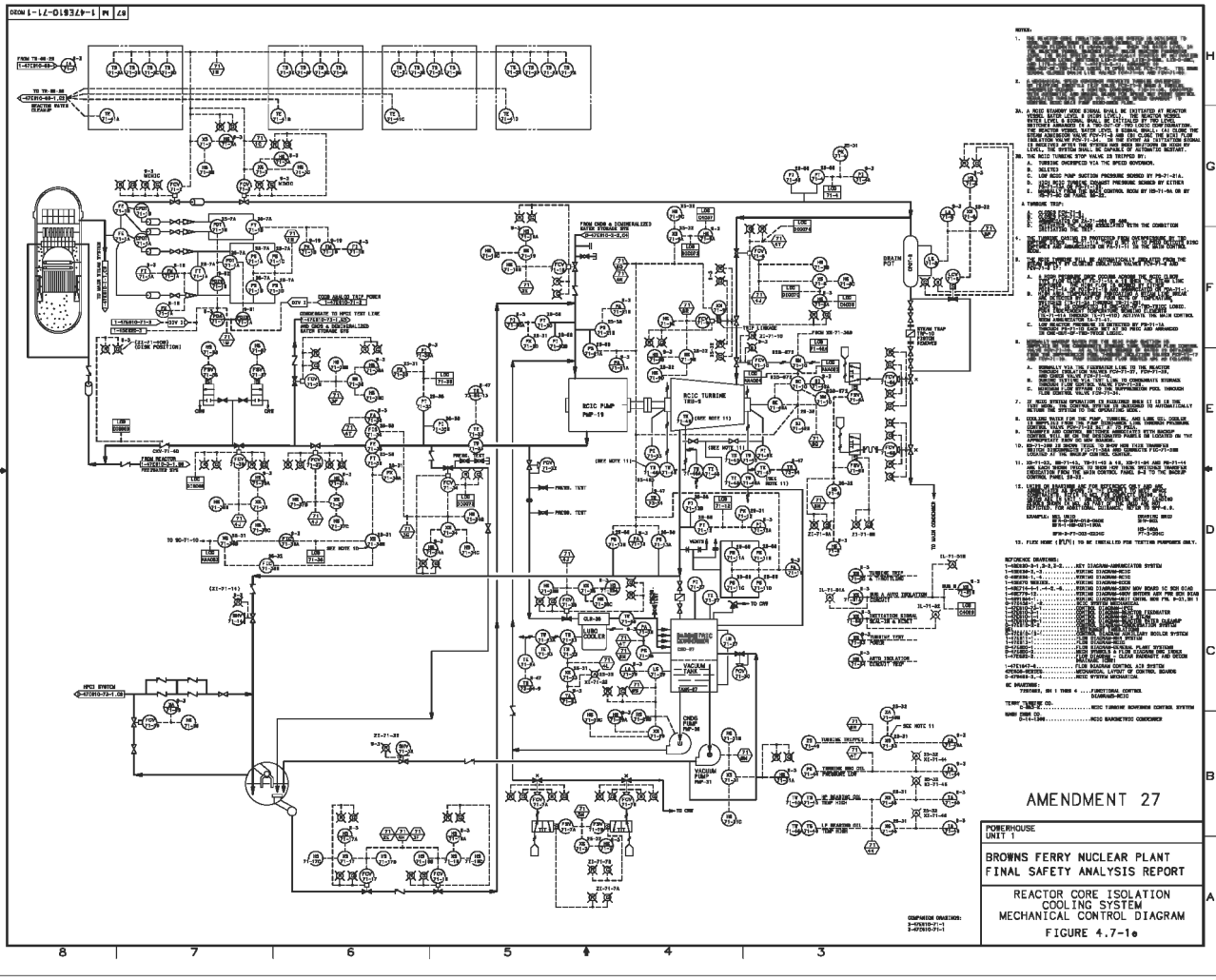
RCIC PUMP PMP-19
RCIC TURBINE TRB-6
VACUUM PUMP PMP-21
CHDG PUMP PMP-36
LUBO COOLER
BAROMETRIC CONDENSER
VACUUM TANK
STEAM TRAP
TO MAIN CONDENSER
TO CRW
HPCI SWITCH
AMENDMENT 27
POWERHOUSE UNIT 1
BROWNS FERRY NUCLEAR PLANT
FINAL SAFETY ANALYSIS REPORT
REACTOR CORE ISOLATION COOLING SYSTEM
MECHANICAL CONTROL DIAGRAM
FIGURE 4.7-1e

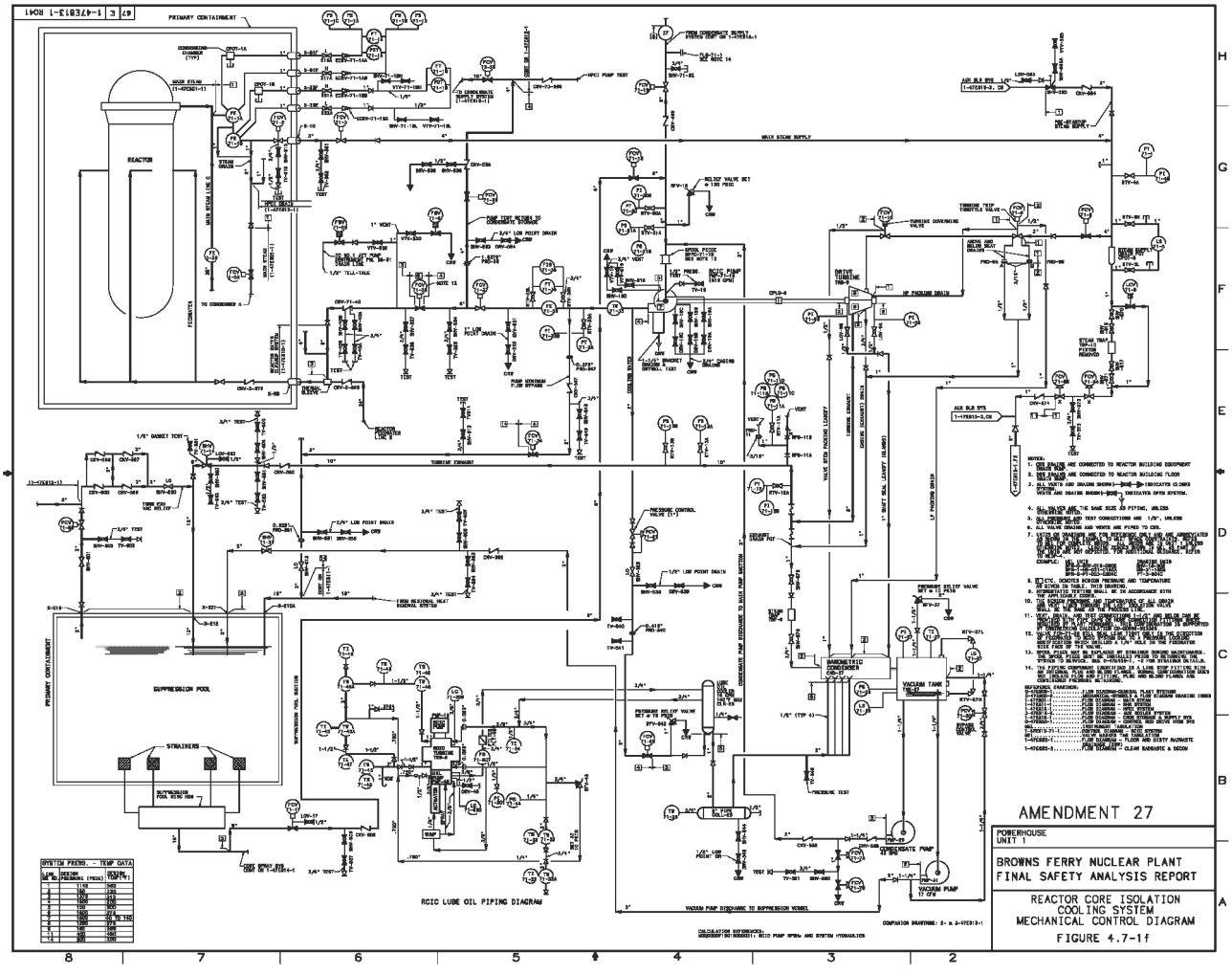
PRIMARY CONTAINMENT
REACTOR
SUPPRESSION POOL
STRAINERS
RCIC LUBE OIL PIPING DIAGRAM
MAIN STEAM SUPPLY
TURBINE EXHAUST
VACUUM PUMP DISCHARGE TO SUPPRESSION VESSEL
CONDENSATE PUMP
VACUUM PUMP
VACUUM TANK
BAROMETRIC CONDENSER
AMENDMENT 27
POWERHOUSE UNIT 1
BROWNS FERRY NUCLEAR PLANT
FINAL SAFETY ANALYSIS REPORT
REACTOR CORE ISOLATION COOLING SYSTEM
MECHANICAL CONTROL DIAGRAM
FIGURE 4.7-1f

Figures 4.7-2a through 4.7-2h
(Deleted by Amendment 22)